BID DOCUMENTS FOR:

ITB #19-016

BOAT RAMP REPAIR
CITY MARINA @ GARRISON BIGHT

APRIL 2019

CITY OF KEY WEST

MAYOR: TERI JOHNSTON

COMMISSIONERS:

JIMMY WEEKLEY

SAMUEL KAUFMAN

BILLY WARDLOW

GREGORY DAVILA

MARY LOU HOOVER

CLAYTON LOPEZ

PREPARED BY:
City of Key West Port & Marine Services Department

CITY OF KEY WEST

KEY WEST, FLORIDA

BID DOCUMENTS

for

BOAT RAMP REPAIR
CITY MARINA @ GARRISON BIGHT

****

CONSISTING OF:

BIDDING REQUIREMENTS
CONTRACT FORMS
SUPPLEMENTAL INFORMATION

****

CITY OF KEY WEST

APRIL 2019

TABLE OF CONTENTS

Page

PART 1 - BIDDING REQUIREMENTS

INVITATION TO BID 1
INSTRUCTIONS TO BIDDERS 2
BID FORM 9
FLORIDA BID BOND 11
ANTI-KICKBACK AFFIDAVIT 13
NON-COLLUSION AFFIDAVIT 14
PUBLIC ENTITIES CRIME FORM 15
CITY OF KEY WEST INDEMNIFICATION 17
EQUAL BENEFITS FOR DOMESTIC PARTNERS AFFIDAVIT 18
CONE OF SILENCE 19
LOCAL VENDOR CERTIFICATION 20
BIDDER'S CHECKLIST 21

PART 2 - CONTRACT FORMS

DRAFT CONTRACT 23
LICENSE REQUIREMENT AND COST 25

PART 3 – SUPPLEMENTAL INFORMATION 26

DRAWINGS .....
ENVIRONMENTAL PERMITS .....

PART 1

BIDDING REQUIREMENTS

INVITATION TO BID

Sealed Bids for City of Key West (CITY) **"BOAT RAMP REPAIR – CITY MARINA @ GARRISON BIGHT"** addressed to the City of Key West, will be received at the office of the City Clerk, 1300 White Street, Key West, Florida until **3:00 p.m.**, local time, on the **9th day of May 2019**, and then will be publicly opened and read. Any bids received after the time and date specified will not be considered.

Please submit one (1) original bid package and two (2) electronic copies on USB drives with a single PDF file of the entire bid package. Bid package shall be enclosed in a sealed envelope, clearly marked on the outside **"ITB #19-016 BOAT RAMP REPAIR – CITY MARINA @ GARRISON BIGHT"** addressed and delivered to the City Clerk at the address noted above.

The project contemplated consists of providing the equipment, labor and materials necessary to repair the existing boat ramp by filling a 20'Wx6'Lx1.6"D void below existing concrete slab as described in the Scope of Services.

The full Invitation to Bid may be obtained from Demand Star by Onvia and The City of Key West website. Please contact Demand Star at www.demandstar.com or call 1-800-711-1712 or www.cityofkeywest-fl.gov.

A **Mandatory pre-bid meeting** will be held on-site at the City Marina, 1801 N. Roosevelt Blvd., Key West, Florida on **April 30, 2019 at 2:30 p.m.**

EACH BID MUST BE SUBMITTED ON THE PRESCRIBED FORM AND ACCOMPANIED BY BID SECURITY AS PRESCRIBED IN THE INSTRUCTIONS TO BIDDERS, PAYABLE TO THE CITY OF KEY WEST, FLORIDA, IN AN AMOUNT NOT LESS THAN FIVE (5) PERCENT OF THE AMOUNT BID.

For information please contact Karen Olson Deputy Director Port & Marine Services Department by email at kolson@cityofkeywest-fl.gov. Verbal communications, per the City's "Cone of Silence" ordinance is not allowed.

The Bidder shall furnish documentation showing that he/she is in compliance with the licensing requirements of County, and City licenses as would be required within ten days of the award. The successful Bidder must also be able to satisfy the City Attorney as to such insurance coverage and legal requirements as may be demanded by the Proposal in question. The CITY may reject BID for any and/or all of the following reasons: (1) for budgetary reasons, (2) if the proposer misstates or conceals a material fact in its bid, (3) if the proposal does not strictly conform to the law or is non-responsive to the bid requirements, (4) if the proposal is conditional, or (5) if a change of circumstances occurs making the purpose of the proposal unnecessary to the CITY, (6) if such rejection is in the best interest of the CITY. The CITY may also waive any minor formalities or irregularities in any proposal.

The CITY retains the right to award bid to the bidder or bidders that best meet the needs of the City.

* * * * * *

INSTRUCTIONS TO BIDDERS

1. CONTRACT DOCUMENTS

A. FORMAT

The Bid Documents are divided into parts, divisions, and sections for convenient organization and reference.

B. DOCUMENT INTERPRETATION

Should there be any doubt as to the meaning or intent of said Bid Documents, the Bidder should request of the Deputy Director Port and Marine Services, in writing (no later than May 3, 2019, 5:00pm) an interpretation thereof. Any interpretation or change in said Bid Documents will be made only in writing in the form of Addenda to the Documents, which will be furnished to all registered holders of Bid Documents. Bidders shall submit with their Bids or indicate receipt of all Addenda. The Owner will not be responsible for any other explanation or interpretations of said Documents.

2. SCOPE OF SERVICES

The project will require the repair of an area of substrate underneath the existing boat ramp concrete slab that has suffered erosion or a loss of materials, gravel, concrete, creating a void area approximately 20 feet wide, 18 inches deep and 6 feet long into the underlying area of the boat ramp concrete slab.

The repairs to the boat ramp are to be made in a fashion as to not affect the structural integrity of existing concrete boat ramp slab that is in good condition.

The contractor shall core drill thru the concrete slab and pump concrete 5,000psi mix into the void until the eroded cavity is filled. The project also requires some small concrete patching to be made to the concrete slab repairing, cracks, holes or any notable damage to the concrete slab boat ramp surface. Contractor to provide any forms required to complete the work.

The contractor shall be responsible for managing and minimizing any turbidity issues caused by the repair work and will deploy barrier boom curtains to prevent any release on the environment.

3. REQUIRED QUALIFICATIONS

The prospective Bidder must meet the statutorily prescribed requirements before award of Contract by the CITY. Bidders must hold or obtain all licenses and/or certificates as required by the State and Local Statutes in order to bid and provide the product specified herein.

4. TYPE OF BID

LUMP SUM

The Proposal for the work is to be submitted on a lump sum basis. All items required to complete the work specified or shown on the Drawings but not included in the Proposal shall be considered incidental to those set forth in the Proposal. Payment to the Contractor will be made on the

measurement of the work actually performed by the Contractor, as specified in the Contract Documents.

The Bidder further proposes to accept as full payment for the Work proposed herein, the amounts computed under the provisions of the Contract Documents and based on the following lump sum amounts. The Bidder agrees that the lump sums include all allowances for overhead and profit for each type and unit of work called for in these Contract Documents.

Total allowable cost for Mobilization, Contract requirements and Demobilization (bid schedule line item 1) shall be 10% maximum of total construction costs (bid schedule line items 3 through 5).

5. PREPARATION OF BIDS

A. GENERAL

All blank spaces in the BID form must be filled in for all schedules and associated parts, as required, preferably in BLACK INK. All price information shall be clearly shown in both words and figures where required. No changes shall be made in the phraseology of the forms. Written amounts shall govern in case of discrepancy between the amounts stated in writing and the amounts stated in figures. In case of discrepancy between unit prices and extended totals, unit prices shall prevail.

Any BID shall be deemed informal which contains omissions, erasures, alterations, or additions of any kind, or prices uncalled for, or in which any of the prices are obviously unbalanced, or which in any manner shall fail to conform to the conditions of the published Invitation to BID.

Only one BID from any individual, firm, partnership, or corporation, under the same or different names, will be considered. Should it appear to the Owner that any Bidder is interested in more than one BID for work contemplated; all Bids in which such Bidder is interested will be rejected.

B. SIGNATURE

The Bidder shall sign his BID in the blank space provided therefor. If Bidder is a corporation, the legal name of the corporation shall be set forth above together with the signature of the officer or officers authorized to sign Contracts on behalf of the corporation. If Bidder is a partnership, the true name of the firm shall be set forth above together with the signature of the partner or partners authorized to sign Contracts in behalf of the partnership. If signature is by an agent, other than an officer of a corporation or a member of a partnership, a notarized power-of-attorney must be on file with the Owner prior to opening of Bids or submitted with the Bid otherwise the Bid will be regarded as not properly authorized.

C. ATTACHMENTS

Bidder shall complete and submit the following forms with his bid:

1. Anti-Kickback Affidavit
2. Non-Collusion Affidavit
3. Public Entity Crimes Form
4. City of Key West Indemnification Form
5. Equal Benefits for Domestic Partners Affidavit

6. Cone of Silence
7. Local Vender Certification
8. Proof of Insurance

6. SUBMISSION OF BID

All BIDS must be submitted no later than the time prescribed, at the place, and in the manner set forth in the Invitation to Bid. Bids must be made on the Bid forms provided herewith **submit one (1) ORIGINAL bid package and two (2) FLASH DRIVES containing a single PDF file of the entire bid package.**

Each Bid must be submitted in a sealed envelope, so marked as to indicate the Bidder's name and its contents without being opened and addressed in conformance with the instructions in the Invitation to Bid.

7. MODIFICATION OR WITHDRAWAL OF BID

Prior to the time and date designated for receipt of Bids, any Bid submitted may be withdrawn by notice to the party receiving Bids at the place designated for receipt of Bids. Such notice shall be in writing over the signature of the Bidder or by telegram. If by telegram, written confirmation over the signature of the Bidder shall be mailed and postmarked on or before the date and time set for receipt of Bids. No Bid may be withdrawn after the time scheduled for opening of Bids unless the time specified in paragraph AWARD OF CONTRACT of these Instructions to Bidders shall have elapsed.

8. BID SECURITY

BIDS must be accompanied by cash, a certified check, or cashier's check drawn on a bank in good standing, or a bid bond issued by a Surety authorized to issue such bonds in the state where the work is located, in the amount of five (5) percent of the total amount of the Proposal submitted. This bid security shall be given as a guarantee that the Bidder will not withdraw his BID for a period of ninety (90) days after bid opening, and that if awarded the Contract, the successful Bidder will execute the attached Contract and furnish properly executed Performance and Payment Bonds, each in the full amount of the Contract price within the time specified. Agent and Surety phone numbers must be provided.

The Attorney-in-Fact who executes this bond in behalf of the Surety must attach a notarized copy of his power-of-attorney as evidence of his authority to bind the Surety on the date of execution of the bond. Where State Statute requires, certification by a resident agent shall also be provided.

If the Bidder elects to furnish a Bid Bond, he shall use the Bid Bond form bound herewith, or one conforming substantially thereto in form and content.

9. RETURN OF BID SECURITY

Within 15 days after the award of the Contract, the CITY will return the bid securities to all Bidders whose BIDS are not to be further considered in awarding the Contract. Retained bid securities will be held until the Contract has been finally executed, after which all bid securities, other than Bidders' bonds and any guarantees, which have been forfeited, will be returned to the respective Bidders whose Proposals they accompanied.

10. AWARD OF CONTRACT

Within 90 calendar days after the opening of Bids, the City will accept one of the Bids or will act in accordance with the following paragraphs. The acceptance of the Bid will be by written notice of award, mailed to the office designated in the Bid, or delivered to the Bidder's representative. In the event of failure of the lowest responsive, responsible Bidder to sign the Contract and provide insurance certificate(s) and evidence of holding required licenses and certificates, the Owner may award the Contract to the next lowest responsive, responsible Bidder. Such award, if made, will be made within 120 days after the opening of Bids. Bidders will guarantee their Bid price(s) for up to 120 calendar days after Bid opening.

The CITY reserves the right to accept or reject any or all Bids and to waive any formalities and irregularities in said Bids.

11. BASIS OF AWARD

The award will be made by the Owner on the basis of the BID from the lowest, responsive, responsible BIDDER(s) which, in the Owner's sole and absolute judgment will best serve the interest of the Owner.

12. EXECUTION OF CONTRACT

The successful Bidder shall, within 10 working days after receiving Notice of Award, sign and deliver to the Owner a Contract in the form hereto attached together with the insurance certificate examples of the bonds as required in the Contract Documents and evidence of holding required licenses and certificates. Within 10 working days after receiving the signed Contract from the successful Bidder, the Owner's authorized agent will sign the Contract. Signature by both parties constitutes execution of the Contract.

13. FAILURE TO EXECUTE CONTRACT AND FURNISH BOND

The Bidder who has a Contract awarded to him and who fails to promptly and properly execute the Contract ~~or furnish the required Bonds~~ shall forfeit the bid security that accompanied his bid, and the bid security shall be retained as liquidated damages by the CITY, and it is agreed that this said sum is a fair estimate of the amount of damages the CITY will sustain in case the Bidder fails to enter into a Contract or furnish the required Bonds. Bid security deposited in the form of cash, a certified check, or cashier's check shall be subject to the same requirement as a Bid Bond.

14. PUBLIC RECORDS REQUIREMENTS

In addition to other contract requirements provided by law, each public agency contract for services must include a provision that requires the Vendor to comply with public records laws, specifically to (a) keep and maintain public records that ordinarily and necessarily would be required by the public agency in order to perform the service; (b) provide the public with access to public records on the same terms and conditions that the public agency would provide the records and at a cost that does not exceed the cost provided in this chapter or as otherwise provided by law; (c) ensure that public records that are exempt or confidential and exempt from public records disclosure requirements are not disclosed except as authorized by law; and (d) meet all requirements for retaining public records and transfer, at no cost, to the public agency all public records in possession of the Vendor upon termination of the contract and destroy any duplicate public records that exempt or confidential and exempt from public records disclosure requirements. All records stored electronically must be provided to the public agency in a

format that is compatible with the information technology systems of the public agency. If a Vendor does not comply with a public records request, the public agency shall enforce the contract provisions in accordance with the contract.

15. TIME OF COMPLETION

The time of completion of the work to be performed under this Contract is the essence of the Contract. Delays and extensions of time may only be allowed with agreement between both parties. Time allowed for completion of the work authorized is stated in Bid.

When the Contractor receives a Notice to Proceed, he shall commence work as soon as possible and shall complete all work within the number of calendar days stipulated in the Contract.

The term of this contract will be **30** calendar days.

16. LIQUIDATED DAMAGES

In the event the Bidder is awarded the Contract and fails to complete the work within the time limit or extended time limit agreed upon, as more particularly set forth in the Contract Documents, liquidated damages shall be paid to the Owner at the rate of **$250.00** per day for all work awarded until the work has been satisfactorily completed as provided by the Contract Documents. Sundays and legal holidays shall be excluded in determining days in default.

Owner will recover such liquidated damages by deducting the amount owed from the final payment or any retainage held by Owner.

17. PERMITS AND FEES

The Bidder awarded this project shall procure and pay all permits and licenses, charges, and fees, and give notices necessary and incidental to the due and lawful prosecution of the work, the cost of which shall be included in the fee received for the work, except where separately agreed. The City has/is obtaining all required environmental permits.

18. BIDDER'S DECLARATION AND UNDERSTANDING

The undersigned, hereinafter called the Bidder, declares that the only persons or parties interested in this Bid are those named herein, that this Bid is, in all respects, fair and without fraud, that it is made without collusion with any official of the Owner, and that the Bid is made without any connection or collusion with any person submitting another Bid on this Contract.

The Bidder further declares that he has carefully examined the Contract Documents and that this Bid is made according to the provisions and under the terms of the Contract Documents, which Documents are hereby made a part of this Bid.

19. CERTIFICATES OF INSURANCE

CONTRACTOR is to secure, pay for, and file with the City of Key West, prior to commencing any work under the Contract, all certificates for workers' compensation, public liability, and property damage liability insurance, and such other insurance coverages as may be required by specifications and addenda thereto, in at least the following minimum amounts with specification amounts to prevail if greater than minimum amounts indicated. Notwithstanding any other

provision of the Contract, the CONTRACTOR shall provide the minimum limits of liability insurance coverage as follows:

Type of Insurance	Limits	Comments
Commercial General Liability	$1,000,000	The proposers may have these coverages combined in 1 policy
Watercraft Liability	$1,000,000	
Business Automobile Liability	$1,000,000	
Workers' Compensation	Statutory	
Employers Liability	$1,000,000/$1,000,000/$1,000,000	
USL&H and Jones Act Coverage	$1,000,000	

CONTRACTOR shall furnish an original Certificate of Insurance indicating, and such policy providing coverage to, City of Key West named as an additional insured on a PRIMARY and NON CONTRIBUTORY basis utilizing an ISO standard endorsement at least as broad as CG 2010 (11/85) or its equivalent, (combination of CG 20 10 07 04 and CG 20 37 07 04, providing coverage for completed operations, is acceptable) including a waiver of subrogation clause in favor of City of Key West on all policies. CONTRACTOR will maintain the General Liability and Umbrella Liability insurance coverages summarized above with coverage continuing in full force including the additional insured endorsement until at least 3 years beyond completion and delivery of the work contracted herein.

Notwithstanding any other provision of the Contract, the CONTRACTOR shall maintain complete workers' compensation coverage for each and every employee, principal, officer, representative, or agent of the CONTRACTOR who is performing any labor, services, or material under the Contract. Further, CONTRACTOR shall additionally maintain the following minimum limits of coverage:

Bodily Injury Each Accident	$1,000,000
Bodily Injury by Disease Each Employee	$1,000,000
Bodily Injury by Disease Policy Limit	$1,000,000

The City of Key West confirms that the scope of services specified in the Contract requires work on or near a navigable waterway. Water description: City of Key West Mooring Field.
Therefore, the CONTRACTOR's workers' compensation policy shall be endorsed to provide the following:

- Workers Compensation/Employer Liability
  USL&H Coverage (Longshore and Harbor Workers' Compensation Act) Endorsement WC 000106A
  Jones Act Coverage* Endorsement WC 000201A

  Note: Jones Act (Crew) coverage may be provided under the P&I policy, if Contractor is using an OWNED vessel during the course of the work.

CONTRACTOR shall provide the City of Key West with a Certificate of Insurance verifying compliance with the workman's compensation coverage as set forth herein and shall provide as

often as required by the City of Key West such certification which shall also show the insurance company, policy number, effective and expiration date, and the limits of workman's compensation coverage under each policy.

CONTRACTOR's insurance policies shall be endorsed to give 30 days written notice to the City of Key West in the event of cancellation or material change, using form CG 02 24, or its equivalent.

Certificates of Insurance submitted to the City of Key West will not be accepted without copies of the endorsements being requested. This includes additional insured endorsements, cancellation/material change notice endorsements, and waivers of subrogation. Copies of USL&H Act and Jones Act endorsements will also be required if necessary. PLEASE ADVISE YOUR INSURANCE AGENT ACCORDINGLY.

CONTRACTOR will comply with any and all safety regulations required by any agency or regulatory body including but not limited to OSHA. CONTRACTOR will notify City of Key West immediately by telephone at (305) 809-3811 any accident or injury to anyone that occurs on the jobsite and is related to any of the work being performed by the CONTRACTOR.

SURETY AND INSURER QUALIFICATIONS

All bonds, insurance contracts, and certificates of insurance shall be either executed by or countersigned by a licensed resident agent of the Surety or insurance company, having his place of business in the State of Florida, and in all ways complying with the insurance laws of the State of Florida. Further, the said Surety or insurance company shall be duly licensed and qualified to do business in the State of Florida.

20. SALES AND USE TAXES

The Bidder agrees that all federal, state, and local sales and use taxes are included in the stated lump sum for the work.

21. ADDENDA

The Bidder hereby acknowledges that he has received Addenda No's. _____, _____, _____, and agrees that all addenda issued are hereby made part of the Contract Documents, and the Bidder further agrees that his Bid(s) includes all impacts resulting from said addenda.

* * * * *

BID SCHEDULE
ITB #19-016

BOATRAMP REPAIR
CITY MARINA @ GARRISON BIGHT

LUMP SUM
The Proposal for the work is to be submitted on a lump sum basis. All items required to complete the work specified or shown on the Drawings but not included in the Proposal shall be considered incidental to those set forth in the Proposal. Payment to the Contractor will be made on the measurement of the work actually performed by the Contractor, as specified in the Contract Documents.

The Bidder further proposes to accept as full payment for the Work proposed herein, the amounts computed under the provisions of the Contract Documents and based on the following lump sum amounts. The Bidder agrees that the lump sums include all allowances for overhead and profit for each type and unit of work called for in these Contract Documents.

1. Mobilization, Contract Requirements and Demobilization

a.	Mobilization	1	each	$_____
b.	Contract Requirements	1	each	$_____
c.	Demobilization	1	each	$_____

1 LS (10% of Construction Cost Max.) $_____

2. Permit Fees (to be paid at cost)

1 LS $**1,400.00**

3. 5,000psi Pump Mix Concrete (includes all labor, equipment and material)

7.4 CY Unit Price/CY $_____ TOTAL $_____

4. Patch Concrete Ramp Surface Defects (includes all labor, equipment and material)

1 LS TOTAL $_____

5. General Allowance (only to be used with Owner's written approval)

1 LS $**1,500.00**

TOTAL OF ALL EXTENDED LINE ITEMS LISTED ABOVE:

Total of lump sum items 1 - 5 $_____

_____Dollars & _____Cents
(amount written in words)

I represent that this bid is submitted in compliance with all terms, conditions and specifications of the Invitation to Bid and that I am authorized by the owners/principals to execute and submit this bid on behalf of the business identified below:

Company Name: _____

Contact Name & Telephone #: _____

Email Address: _____ Signature: _____

FLORIDA BID BOND

BOND NO. _____

AMOUNT: $_____

KNOW ALL MEN BY THESE PRESENTS, that _____

_____

hereinafter called the PRINCIPAL, and _____

_____

a corporation duly organized under the laws of the State of _____

having its principal place of business at _____

_____in the State of _____,

and authorized to do business in the State of Florida, as SURETY, are held and firmly bound unto

_____

hereinafter CITY OF KEY WEST called the OBLIGEE, in the sum of_____

_____ _____ DOLLARS ($_____) for the payment for which we bind ourselves, our heirs, executors, administrators, successors, and assigns, jointly and severally, firmly by these present.

THE CONDITION OF THIS BOND IS SUCH THAT:

WHEREAS, the PRINCIPAL is herewith submitting his or its Bid Proposal for **Boat Ramp Repair – City Marina @ Garrison Bight**, said Bid Proposal, by reference thereto, being hereby made a part hereof.

WHEREAS, the PRINCIPAL contemplates submitting or has submitted a bid to the OBLIGEE

for the furnishing of all labor, materials (except those to be specifically furnished by the CITY), equipment, machinery, tools, apparatus, means of transportation for, and the performance of the work covered in the Proposal and the detailed Specifications, entitled:

ITB #19-016

BOAT RAMP REPAIR

CITY MARINA @ GARRISON BIGHT

WHEREAS, it was a condition precedent to the submission of said bid that a cashier's check, certified check, or bid bond in the amount of 5 percent of the base bid be submitted with said bid as a guarantee that the Bidder would, if awarded the Contract, enter into a written Contract with the CITY for the performance of said Contract, within 10 working days after written notice having been given of the award of the Contract.

NOW, THEREFORE, the conditions of this obligation are such that if the PRINCIPAL within 10 consecutive calendar days after written notice of such acceptance, enters into a written Contract with the OBLIGEE and furnishes the Performance and Payment Bonds, each in an amount equal to 100 percent of the base bid, satisfactory to the CITY, then this obligation shall be void; otherwise the sum herein stated shall be due and payable to the OBLIGEE and the Surety herein agrees to pay said sum immediately upon demand of the OBLIGEE in good and lawful money of the United States of America, as liquidated damages for failure thereof of said PRINCIPAL.

Signed and sealed this _____ day of _____, 2019.

By_____
PRINCIPAL

_____
SURETY

By _____
Attorney-In-Fact

ANTI-KICKBACK AFFIDAVIT

STATE OF _____)

: SS

COUNTY OF _____)

I, the undersigned hereby duly sworn, depose and say that no portion of the sum herein bid will be paid to any employees of the City of Key West as a commission, kickback, reward or gift, directly or indirectly by me or any member of my firm or by an officer of the corporation.

By:_____

Sworn and subscribed before me this _____ day of _____20___.

NOTARY PUBLIC, State of Florida at Large

My Commission Expires:

* * * * * *

NON-COLLUSION AFFIDAVIT

STATE OF FLORIDA)
:
SS COUNTY OF MONROE)

I, the undersigned hereby declares that the only persons or parties interested in this Proposal are those named herein, that this Proposal is, in all respects, fair and without fraud, that it is made without collusion with any official of the Owner, and that the Proposal is made without any connection or collusion with any person submitting another Proposal on this Contract.

By: _____

Sworn and subscribed before me this

_____ day of _____, 2019.

_____
NOTARY PUBLIC, State of Florida at Large

My Commission Expires: _____

SWORN STATEMENT UNDER SECTION 287.133(3)(A)
FLORIDA STATUTES, ON PUBLIC ENTITY CRIMES

THIS FORM MUST BE SIGNED IN THE PRESENCE OF A NOTARY PUBLIC OR OTHER OFFICER AUTHORIZED TO ADMINISTER OATHS.

1. This sworn statement is submitted with Bid or Proposal for _____

_____

2. This sworn statement is submitted by_____
(name of entity submitting sworn statement)

whose business address is _____

_____

and (if applicable) its Federal Employer Identification Number (FEIN) is_____

_____

(If the entity has no FEIN, include the Social Security Number of the individual

signing this sworn statement _____

3. My name is _____
(please print name of individual signing)

and my relationship to the entity named above is _____

4. I understand that a "public entity crime" as defined in Paragraph 287.133(1)(g), Florida Statutes, means a violation of any state or federal law by a person with respect to and directly related to the transaction of business with any public entity or with an agency or political subdivision of any other state or with the United States, including but not limited to, any bid or contract for goods or services to be provided to any public or an agency or political subdivision of any other state or of the United States and involving antitrust, fraud, theft, bribery, collusion, racketeering, conspiracy, material misrepresentation.

5. I understand that "convicted" or "conviction" as defined in Paragraph 287.133(1)(b), Florida Statutes, means a finding of guilt or a conviction of a public entity crime, with or without an adjudication guilt, in any federal or state trial court of record relating to charges brought by indictment information after July 1, 1989, as a result of a jury verdict, nonjury trial, or entry of a plea of guilty or nolo contendere.

6. I understand that an "affiliate" as defined in Paragraph 287.133(1)(a), Florida Statutes, means

    1. A predecessor or successor of a person convicted of a public entity crime; or

    2. An entity under the control of any natural person who is active in the management of the entity and who has been convicted of a public entity crime. The term "affiliate" includes those officers, directors, executives, partners, shareholders, employees, members, and agents who are active in the management of an affiliate. The ownership by one person of shares constituting controlling interest in another person, or a pooling of equipment or income among persons when not for fair market value under an arm's length agreement, shall be a prima facie case that one person controls another person. A person who knowingly enters into a joint venture with a person who has been convicted of a public entity crime in Florida during the preceding 36 months shall be considered an affiliate.

7. I understand that a "person" as defined in Paragraph 287.133(1)(8), Florida Statutes, means any natural person or entity organized under the laws of any state or of the United States with the legal power to enter into a binding contract and which bids or applies to bid on contracts for the provision of goods or services let by a public entity, or which otherwise transacts or applies to transact business with public entity. The term "person" includes those officers, directors, executives, partners, shareholders, employees, members, and agents who are active in management of an entity.

8. Based on information and belief, the statement which I have marked below is true in relation to the entity submitting this sworn statement. (Please indicate which statement applies).

____Neither the entity submitting this sworn statement, nor any officers, directors, executives, partners, shareholders, employees, members, or agents who are active in management of the entity, nor any affiliate of the entity have been charged with and convicted of a public entity crime subsequent to July 1, 1989, AND (Please indicate which additional statement applies.)

_____There has been a proceeding concerning the conviction before a hearing of the State of Florida, Division of Administrative Hearings. The final order entered by the hearing officer did not place the person or affiliate on the convicted vendor list. (Please attach a copy of the final order.)

_____The person or affiliate was placed on the convicted vendor list. There has been a subsequent proceeding before a hearing officer of the State of Florida, Division of Administrative Hearings. The final order entered by the hearing officer determined that it was in the public interest to remove the person or
affiliate from the convicted vendor list. (Please attach a copy of the final order.)

_____The person or affiliate has not been put on the convicted vendor list. (Please describe any action taken by or pending with the Department of General Services.)

_____
(signature)

_____
(date)

STATE OF_____

COUNTY OF_____

PERSONALLY APPEARED BEFORE ME, the undersigned authority,

_____ who, after first being sworn by me, affixed his/her
(name of individual signing)

signature in the space provided above on this _____day of _____ , 20___.

My commission expires:

_____
NOTARY PUBLIC

* * * * * *

CITY OF KEY WEST INDEMNIFICATION FORM

To the fullest extent permitted by law, the CONTRACTOR expressly agrees to indemnify and hold harmless the City of Key West, their officers, directors, agents and employees *(herein called the "indemnitees") from liabilities, damages, losses and costs, including but not limited to, reasonable attorney's fees and court costs, such legal expenses to include costs incurred in establishing the indemnification and other rights agreed to in this Paragraph, to persons or property, to the extent caused by the negligence, recklessness, or intentional wrongful misconduct of the CONTRACTOR, its Subcontractors or persons employed or utilized by them in the performance of the Contract. Claims by indemnitees for indemnification shall be limited to the amount of CONTRACTOR's insurance or $1 million per occurrence, whichever is greater. The parties acknowledge that the amount of the indemnity required hereunder bears a reasonable commercial relationship to the Contract and it is part of the project specifications or the bid documents, if any.

The indemnification obligations under the Contract shall not be restricted in any way by any limitation on the amount or type of damages, compensation, or benefits payable by or for the CONTRACTOR under Workers' Compensation acts, disability benefits acts, or other employee benefits acts, and shall extend to and include any actions brought by or in the name of any employee of the CONTRACTOR or of any third party to whom CONTRACTOR may subcontract a part or all of the Work. This indemnification shall continue beyond the date of completion of the work.

CONTRACTOR: _____ SEAL:

Address

_____

Signature

_____

Print Name

_____

Title

DATE: _____

* * * * * *

EQUAL BENEFITS FOR DOMESTIC PARTNERS AFFIDAVIT

STATE OF _____)

: SS

COUNTY OF _____)

I, the undersigned hereby duly sworn, depose and say that the firm of _____

_____

provides benefits to domestic partners of its employees on the same basis as it provides benefits to employees' spouses, per City of Key West Code of Ordinances Sec. 2-799.

By:_____

Sworn and subscribed before me this _____ day of _____ 20 ___.

NOTARY PUBLIC, State of Florida at Large

My Commission Expires:

* * * * * *

CONE OF SILENCE AFFIDAVIT

STATE OF _____)

: SS

COUNTY OF _____)

I, the undersigned hereby duly sworn, depose and say that all owner(s), partners, officers, directors, employees and agents representing the firm of _____ have read and understand the limitations and procedures regarding communications concerning City of Key West Code of Ordinances Sec. 2-773 Cone of Silence.

By: _____

Sworn and subscribed before me this

_____ day of _____ 20_____.

_____

NOTARY PUBLIC, State of _____ at Large

My Commission Expires: _____

* * * * * *

LOCAL VENDOR CERTIFICATION
PURSUANT TO CITY OF KEY WEST CODE OF ORDINANCES SECTION 2-798

The undersigned, as a duly authorized representative of the vendor listed herein, certifies to the best of his/her knowledge and belief, that the vendor meets the definition of a "Local Business." For purposes of this section, "local business" shall mean a business which:

a. Principle address as registered with the FL Department of State located within 30 miles of the boundaries of the city, listed with the chief licensing official as having a business tax receipt with its principle address within 30 miles of the boundaries of the city for at least one year immediately prior to the issuance of the solicitation.

b. Maintains a workforce of at least 50 percent of its employees from the city or within 30 miles of its boundaries.

c. Having paid all current license taxes and any other fees due the city at least 24 hours prior to the publication of the call for bids or request for proposals.

- Not a local vendor pursuant to Code od Ordinances Section 2-798
- Qualifies as a local vendor pursuant to Code od Ordinances Section 2-798

If you qualify, please complete the following in support of the self-certification & submit copies of your County and City business licenses. Failure to provide the information requested will result in denial of certification as a local business.

Business Name Phone:

Current Local Address: Fax:
(P.O Box numbers may not be used to establish status)

Length of time at this address

_____ _____
Signature of Authorized Representative Date

STATE OF_____
COUNTY OF_____

The foregoing instrument was acknowledged before me this _____day of _____, 20___.
By_____, of_____
(Name of officer or agent, title of officer or agent) Name of corporation acknowledging)
or has produced_____as identification
(type of identification)

_____
Signature of Notary

_____
Print, Type or Stamp Name of Notary

Return Completed form with
Supporting documents to:
City of Key West Purchasing

_____
Title or Rank

* * * * * *

BIDDER'S CHECKLIST

(Note: The purpose of this checklist is to serve as a reminder of major items to be addressed in submitting a bid and is not intended to be all inclusive. It does not alleviate the Bidder from the responsibility of becoming familiar with all aspects of the Contract Documents and Proper completion and submission of his bid.)

1. All Bid Documents thoroughly read and understood ☐

2. All blank spaces in Bid filled in black ink. ☐

3. Total and unit Prices added correctly. ☐

4. Addenda acknowledged. ☐

5. Bid signed by authorized officer. ☐

6. Bidder familiar with federal, state, and local laws, ordinances, rules and regulations affecting the proposed purchase. ☐

7. Bidder, if successful, able to obtain and/or demonstrate possession of required licenses and certificates within (10) ten days after receiving a Notice of Award. ☐

8. Bid submitted intact with the volume containing the Bidding Requirements, Contract Forms and Conditions of the Contract, one (1) original, two (2) USB drives. ☐

9. Bid Documents submitted in sealed envelope and addressed and labeled in conformance with the instructions in the Invitation to Bid. ☐

10. Anti-kickback Affidavit; Public Entity Crime Form; City of Key West Indemnification Equal Benefits for Domestic Partners Affidavit; Local Vendor Certification; Cone of Silence and Proof of Insurance, Non-Collusion Affidavit ☐

PART 2

CONTRACT FORMS

CONTRACT AGREEMENT

This Contract, made and entered into _____ day of _____ 20___, by and between the City of Key West, hereinafter called the "Owner", and _____, hereinafter called the "Contractor";

WITNESSETH:

The Contractor, in consideration of the sum to be paid him by the Owner and of the covenants and agreements herein contained, hereby agrees at his own proper cost and expense to do all the work and furnish all the materials, tools, labor, and all appliances, machinery, and appurtenances for **ITB #19-016 BOAT RAMP REPAIR – CITY MARINA @ GARRISON BIGHT**

Key West, Florida to the extent of the Bid made by the Contractor, dated the __day of _____ , 20_____, all in full compliance with the Contract Documents referred to herein.

The PROCUREMENT REQUIREMENTS, including the signed copy of the BID SCHEDULE, the CONTRACT FORMS, DRAWINGS and/or SUPPLEMENTAL INFORMATION (if any), are hereby referred to and by reference made part of this Contract as fully and completely as if the same were fully set forth herein and are mutually cooperative therewith.

In consideration of the performance of the work as set forth in these Contract Documents, the Owner agrees to pay to the Contractor the amount bid in the Bid as adjusted in accordance with the Contract Documents, or as otherwise herein provided, and to make such payments in the manner and at the times provided in the Contract Documents.

The Contractor agrees to complete the work within **thirty (30)** calendar days and to accept as full payment hereunder the amounts computed as determined by the Contract Documents and based on the said Bid.

The Contractor agrees to remedy all defects appearing in the work or developing in the materials furnished and the workmanship performed under this Contract during the warranty period after the date of final acceptance of the work by the Owner, and further agrees to indemnify and save the Owner harmless from any costs encountered in remedying such defects.

Liquidated Damages: The Contractor recognizes that time is of the essence and that the Owner will suffer financial loss if the Work is not completed within the dates specified in the paragraphs above, plus any extensions thereof allowed.

In the event the Contractor fails to complete the work within the time limit or extended time limit agreed upon, as more particularly set forth in the Contract Documents, liquidated damages shall be paid at a rate of **$250.00** per day. Sundays and legal holidays shall be included in determining days in default.

This contract will automatically expire upon completion of the project. Contractors warranty obligations remain in effect.

IN WITNESS WHEREOF, we, the parties hereto, each herewith subscribe the same this

_____ day of _____, A.D., 20_____.

CITY OF KEY WEST

By_____

Printed_____

Title_____

CONTRACTOR

By_____

Printed_____

Title_____

APPROVED AS TO FORM

_____

Attorney for Owner

* * * * * *

LICENSE REQUIREMENT AND COST

License required for this Project. Contractor must be Florida licensed general contractor or building contractor.

Cost Not To Exceed $410.00.

CITY OF KEY WEST BUSINESS LICENSE TAX RECEIPT

A City of Key West Business License Tax Receipt is required for this project. Contractor must be general contractor, building contractor or engineering contractor. Cost not to exceed $410.00.

City of Key West Business License Tax Receipt may be found on the city website.

http://www.keywestcity.com/egov/docs/1162843921181.htm

PART 3

SUPPLEMENTAL INFORMATION

CITY MARINA AT GARRISON BIGHT
PROJECT AREA

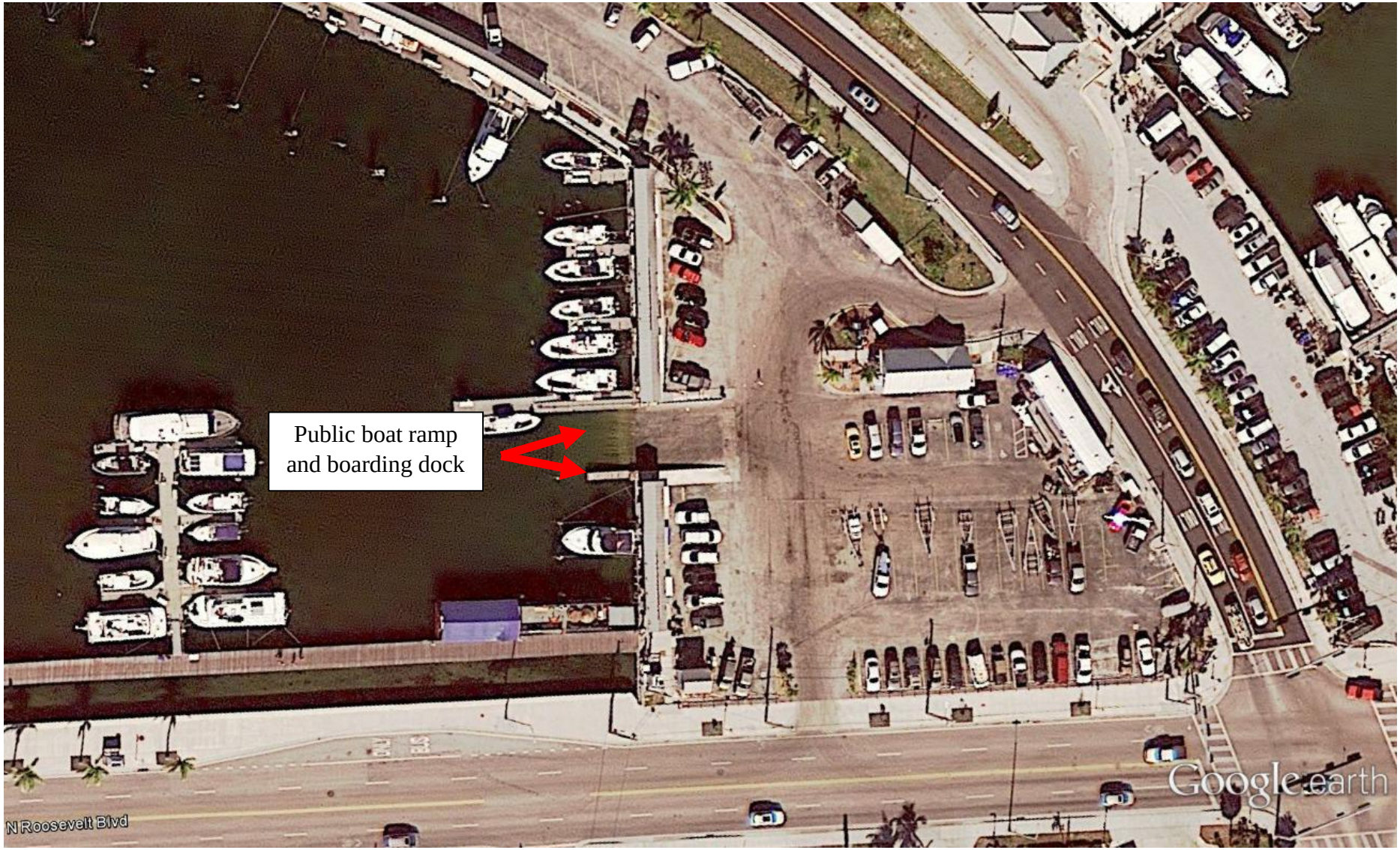

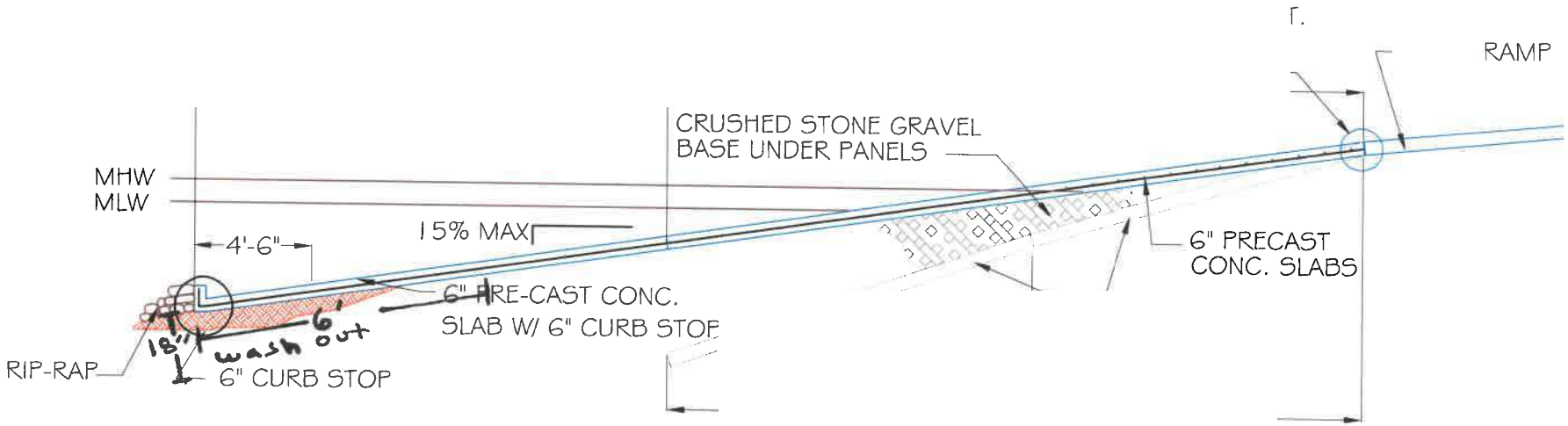

NOTE: RAMP SLOPE IS EXAGGERATED
FOR ILLUSTRATION PURPOSES.

RAMP EXTENSION CROSS SECTION A-A

NTS

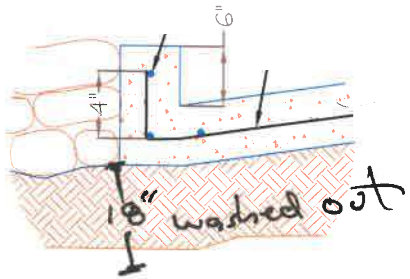

6" CURB STOP - DETAIL A

N.T.S.

BAR IS ONE INCH ON ORIGINAL DRAWING.

0 1"

IF NOT ONE INCH ON THIS SHEET, ADJUST SCALES ACCORDINGLY.

City of Key West
Engineering Services
604 Simonton Street
Key West, Florida 33040
(305) 292-8195

GARRISON BIGHT MARINA
BOAT LAUNCH RAMP

EXISTING RAMP SECTION

5

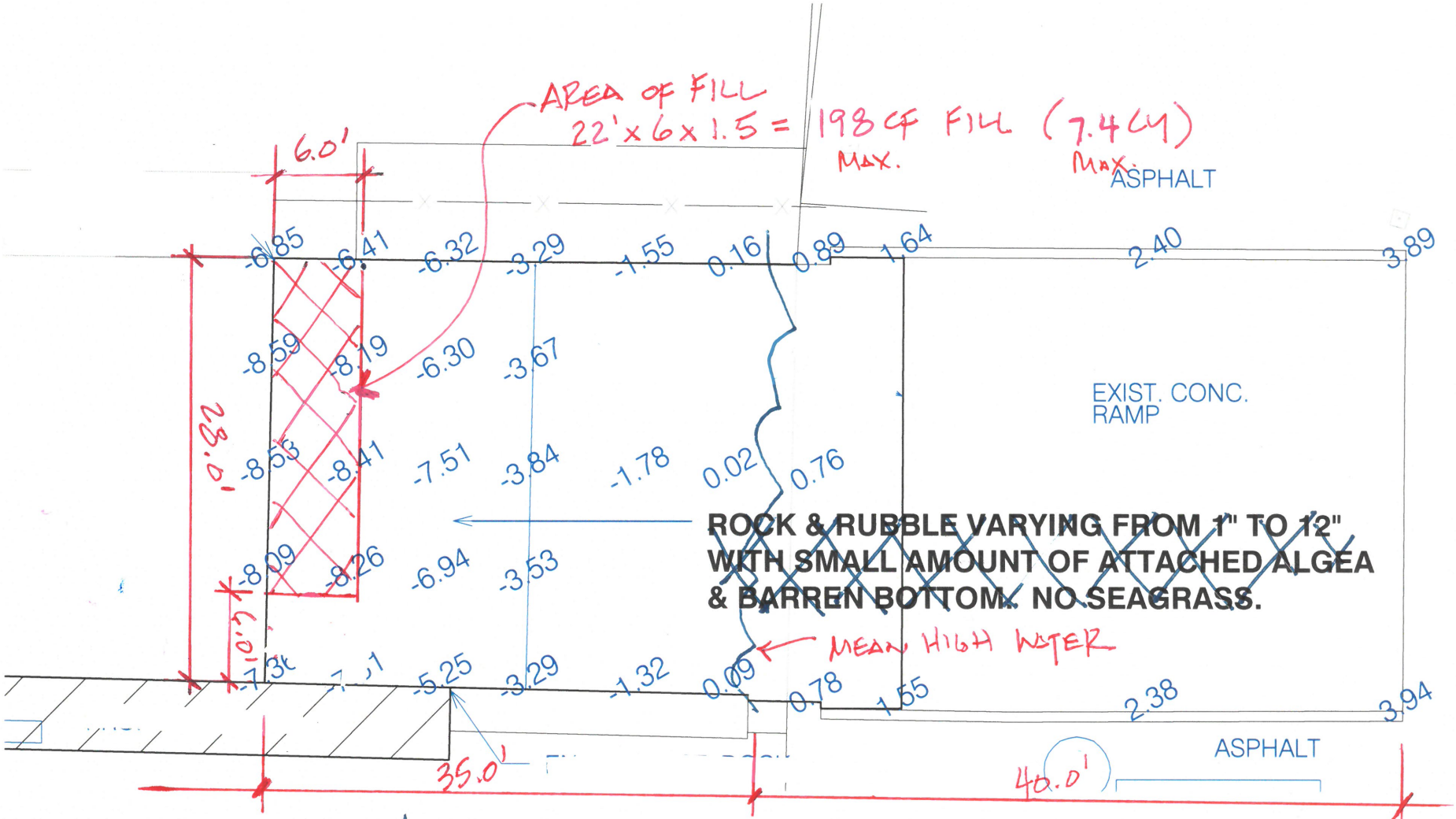

REPAIR / FILL LOCATION & BOTTOM ELEVATIONS

1"=10'

1-31-19 KMD

FILL = 7.4 CY
MAX

BAR IS ONE INCH ON ORIGINAL DRAWING.
0 1"
IF NOT ONE INCH ON THIS SHEET, ADJUST SCALES ACCORDINGLY.

City of Key West
Engineering Services
604 Simonton Street
Key West, Florida 33040
(305) 292-8195

TITLE: GARRISON BIGHT MARINA
BOAT LAUNCH RAMP & DOCK EXTENSION

DESIGN:		PROJECT NO.: GB 2025
DRAWN BY: DMA	CITY ENGINEER: DATE	DRAWING NO.: A-333
CHECKED: AM-L	REPAIR / FILL LOCATION	
SCALE: 1"=10'		1 of 1

FLORIDA DEPARTMENT OF
Environmental Protection

South District Branch Office
2796 Overseas Highway, Suite 221
Marathon, FL 33050
SouthDistrict@FloridaDEP.gov

Ron DeSantis
Governor

Jeanette Nuñez
Lt. Governor

Noah Valenstein
Secretary

February 4, 2019

City of Key West at Garrison Bight
1801 North Roosevelt Boulevard
Key West, Florida 33040
dHawthorne@CityOfKeyWest-FL.gov

File No.: 0116528-013-EE, Monroe County

Dear Applicant:

On January 16, 2019, we received your request for verification of exemption to perform the following activities:

> To repair/maintain a public boat ramp in the same location and configuration at 1801 North Roosevelt Boulevard, Key West, Florida 33040, Parcel ID No. 0072070 000000 in Garrison Bight, Class III Waters, Section 32, Township 67 South, Range 25 East, Monroe County.

Your request has been reviewed to determine whether it qualifies for (1) a regulatory exemption, (2) proprietary authorization (related to state-owned submerged lands), and (3) federal approval that may be necessary for work in wetlands or waters of the United States.

Your project did not qualify for the **federal review portion** portion(s) of this verification request. **Additional authorization must be obtained prior to commencement of the proposed activity**. This letter does not relieve you from the responsibility of obtaining other federal, state, or local authorizations that may be required for the activity. Please refer to the specific section(s) dealing with that portion of the review below for advice on how to proceed.

If you change the project from what you submitted, the authorization(s) granted may no longer be valid at the time of commencement of the project. Please contact us prior to beginning your project if you wish to make any changes.

If you have any questions regarding this matter, please contact us by telephone at (239) 344-5600 or by e-mail at SouthDistrict@floridadep.gov.

1. Regulatory Review – VERIFIED

Based on the information submitted, the Department has verified that the activity as proposed is exempt under Chapter 62-330.051(5)(e), Florida Administrative Code, and Section 403.813(1)(c) of the Florida Statutes from the need to obtain a regulatory permit under Part IV of Chapter 373 of the Florida Statutes.

This exemption verification is based on the information you provided the Department and the statutes and rules in effect when the information was submitted. This verification may not be valid if site conditions materially change, the project design is modified, or the statutes or rules governing the exempt activity are amended. In the event you need to re-verify the exempt status for the activity, a new request and verification fee will be required. Any substantial modifications to the project design should be submitted to the Department for review, as changes may result in a permit being required.

2. Proprietary Review - NOT REQUIRED

The activity does not appear to be located on sovereign submerged lands, and does not require further authorization under Chapter 253 of the Florida Statutes, or Chapters 18-20 or 18-21 of the Florida Administrative Code.

3. SPGP Review - NOT APPROVED

Your proposed activity as outlined on your application and attached drawings does not qualify for Federal authorization pursuant to the State Programmatic General Permit and a SEPARATE permit or authorization shall be required from the Corps. You must apply separately to the Corps using their *APPLICATION FOR DEPARTMENT OF THE ARMY PERMIT*, ENG FORM 4345, or alternative as allowed by their regulations. More information on Corps permitting may be found online in the Jacksonville District Regulatory Division Source Book at: http://www.saj.usace.army.mil/Divisions/Regulatory/sourcebook.htm.

Authority for review - an agreement with the USACOE entitled "Coordination Agreement Between the U. S. Army Corps of Engineers (Jacksonville District) and the Florida Department of Environmental Protection, or Duly Authorized Designee, State Programmatic General Permit," Section 10 of the Rivers and Harbor Act of 1899, and Section 404 of the Clean Water Act.

Additional Information

Please retain this letter. The activities may be inspected by authorized state personnel in the future to ensure compliance with appropriate statutes and administrative codes. If the activities are not in compliance, you may be subject to penalties under Chapter 373, F.S., and Chapter 18-14, F.A.C.

NOTICE OF RIGHTS

This action is final and effective on the date filed with the Clerk of the Department unless a petition for an administrative hearing is timely filed under Sections 120.569 and 120.57, F.S., before the deadline for filing a petition. On the filing of a timely and sufficient petition, this action will not be final and effective until further order of the Department. Because the administrative hearing process is designed to formulate final agency action, the hearing process may result in a modification of the agency action or even denial of the application.

Petition for Administrative Hearing

A person whose substantial interests are affected by the Department's action may petition for an administrative proceeding (hearing) under Sections 120.569 and 120.57, F.S. Pursuant to Rules 28-106.201 and 28-106.301, F.A.C., a petition for an administrative hearing must contain the following information:

(a) The name and address of each agency affected and each agency's file or identification number, if known;

(b) The name, address, and telephone number of the petitioner; the name, address, and telephone number of the petitioner's representative, if any, which shall be the address for service purposes during the course of the proceeding; and an explanation of how the petitioner's substantial interests are or will be affected by the agency determination;

(c) A statement of when and how the petitioner received notice of the agency decision;

(d) A statement of all disputed issues of material fact. If there are none, the petition must so indicate;

(e) A concise statement of the ultimate facts alleged, including the specific facts that the petitioner contends warrant reversal or modification of the agency's proposed action;

(f) A statement of the specific rules or statutes that the petitioner contends require reversal or modification of the agency's proposed action, including an explanation of how the alleged facts relate to the specific rules or statutes; and

(g) A statement of the relief sought by the petitioner, stating precisely the action that the petitioner wishes the agency to take with respect to the agency's proposed action.

The petition must be filed (received by the Clerk) in the Office of General Counsel of the Department at 3900 Commonwealth Boulevard, Mail Station 35, Tallahassee, Florida 32399-3000, or via electronic correspondence at Agency_Clerk@dep.state.fl.us. Also, a copy of the petition shall be mailed to the applicant at the address indicated above at the time of filing.

Time Period for Filing a Petition

In accordance with Rule 62-110.106(3), F.A.C., petitions for an administrative hearing by the applicant and persons entitled to written notice under Section 120.60(3), F.S., must be filed within 21 days of receipt of this written notice. Petitions filed by any persons other than the applicant, and other than those entitled to written notice under Section 120.60(3), F.S., must be

filed within 21 days of publication of the notice or within 21 days of receipt of the written notice, whichever occurs first. You cannot justifiably rely on the finality of this decision unless notice of this decision and the right of substantially affected persons to challenge this decision has been duly published or otherwise provided to all persons substantially affected by the decision. While you are not required to publish notice of this action, you may elect to do so pursuant Rule 62-110.106(10)(a).

The failure to file a petition within the appropriate time period shall constitute a waiver of that person's right to request an administrative determination (hearing) under Sections 120.569 and 120.57, F.S., or to intervene in this proceeding and participate as a party to it. Any subsequent intervention (in a proceeding initiated by another party) will be only at the discretion of the presiding officer upon the filing of a motion in compliance with Rule 28-106.205, F.A.C. If you do not publish notice of this action, this waiver will not apply to persons who have not received written notice of this action.

Extension of Time

Under Rule 62-110.106(4), F.A.C., a person whose substantial interests are affected by the Department's action may also request an extension of time to file a petition for an administrative hearing. The Department may, for good cause shown, grant the request for an extension of time. Requests for extension of time must be filed with the Office of General Counsel of the Department at 3900 Commonwealth Boulevard, Mail Station 35, Tallahassee, Florida 32399-3000, or via electronic correspondence at Agency_Clerk@dep.state.fl.us, before the deadline for filing a petition for an administrative hearing. A timely request for extension of time shall toll the running of the time period for filing a petition until the request is acted upon.

Mediation

Mediation is not available in this proceeding.

FLAWAC Review

The applicant, or any party within the meaning of Section 373.114(1)(a) or 373.4275, F.S., may also seek appellate review of this order before the Land and Water Adjudicatory Commission under Section 373.114(1) or 373.4275, F.S. Requests for review before the Land and Water Adjudicatory Commission must be filed with the Secretary of the Commission and served on the Department within 20 days from the date when this order is filed with the Clerk of the Department.

Judicial Review

Once this decision becomes final, any party to this action has the right to seek judicial review pursuant to Section 120.68, F.S., by filing a Notice of Appeal pursuant to Florida Rules of Appellate Procedure 9.110 and 9.190 with the Clerk of the Department in the Office of General Counsel (Station #35, 3900 Commonwealth Boulevard, Tallahassee, Florida 32399-3000) and by filing a copy of the Notice of Appeal accompanied by the applicable filing fees with the appropriate district court of appeal. The notice must be filed within 30 days from the date this action is filed with the Clerk of the Department.

EXECUTION AND CLERKING

Executed in Orlando, Florida

STATE OF FLORIDA DEPARTMENT OF ENVIRONMENTAL PROTECTION

Megan Mills
Permitting Program Administrator
South District

Enclosures:
3 Project drawings
62-330.051(5)(e), F.A.C./403.813(1)(c), F.S.

CERTIFICATE OF SERVICE

The undersigned duly designated deputy clerk hereby certifies that this document and all attachments, including all copies, were sent to the addressee and to the following listed persons:

U.S. Army Corps of Engineers, Miami Office, SEAppls@usace.army.mil

FILING AND ACKNOWLEDGMENT

FILED, on this date, pursuant to Section 120.52(7), F.S., with the designated Department clerk, receipt of which is hereby acknowledged.

Barbara Browning

Clerk

February 4, 2019
Date

EXEMPT
File Number:
0116528-013-EE

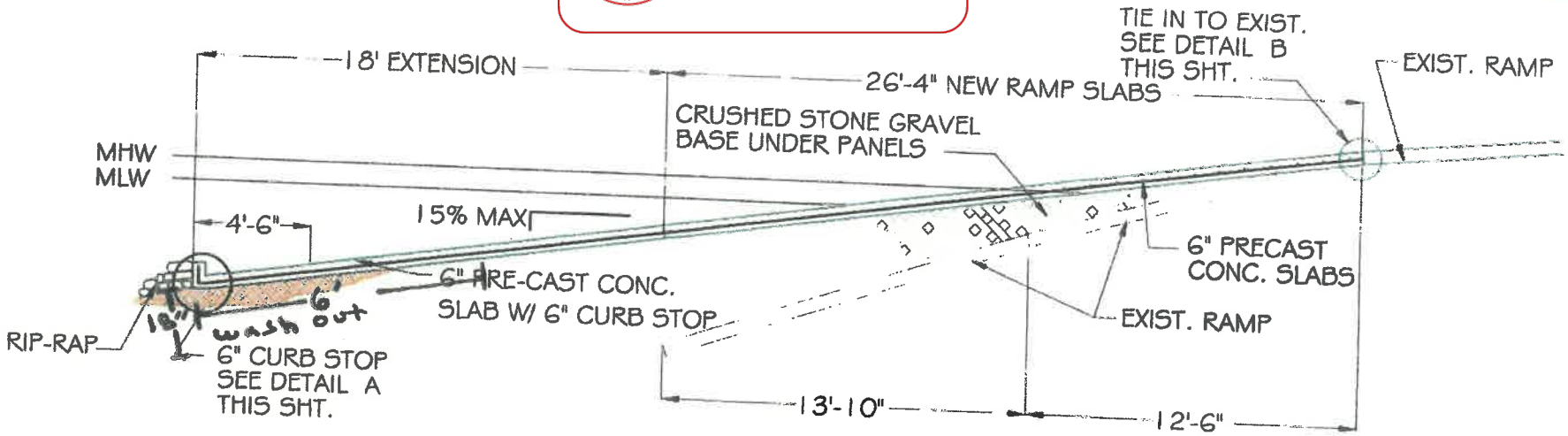

NOTE: RAMP SLOPE IS EXAGGERATED FOR ILLUSTRATION PURPOSES.

PLACE NEW PRECAST PANELS ON TOP OF EXIST. RAMP TO ACHIEVE NEW MAX 15% SLOPE. PROVIDE CRUSHED STONE GRAVEL/ GROUT BASE UNDER PANELS.

RAMP
NTS

Received Electronically
January 16, 2019
South District

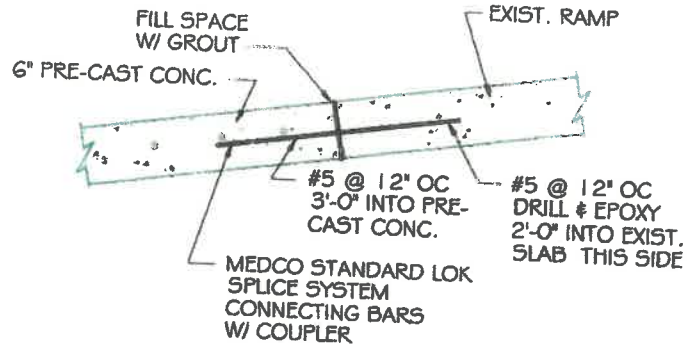

RAMP TIE-IN - DETAIL B
NTS

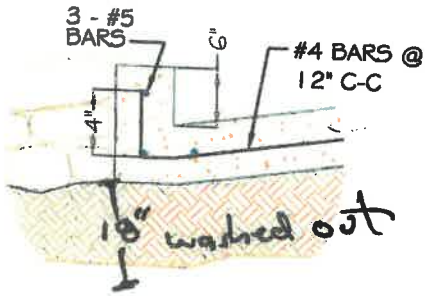

6" CURB STOP - DETAIL A
N.T.S.

BAR IS ONE INCH ON ORIGINAL DRAWING.
0 — 1"
IF NOT ONE INCH ON THIS SHEET, ADJUST SCALES ACCORDINGLY

City of Key West
Engineering Services
604 Simonton Street
Key West, Florida 33040
(305) 292-8195

GARRISON BIGHT MARINA
BOAT LAUNCH RAMP

DMA		GB 2025
AM-L		A-333
NTS	RAMP SECTIONS AND DETAILS	1-15-19
		3 of 5

Untitled Map

Write a description for your map.

Legend

Boat ramp rehabilitation project

EXEMPT
File Number:
011662B-013-EE

Received
Electronically
January 16, 2019
South District

EXEMPT
File Number:
0116528-013-EE

Google Maps

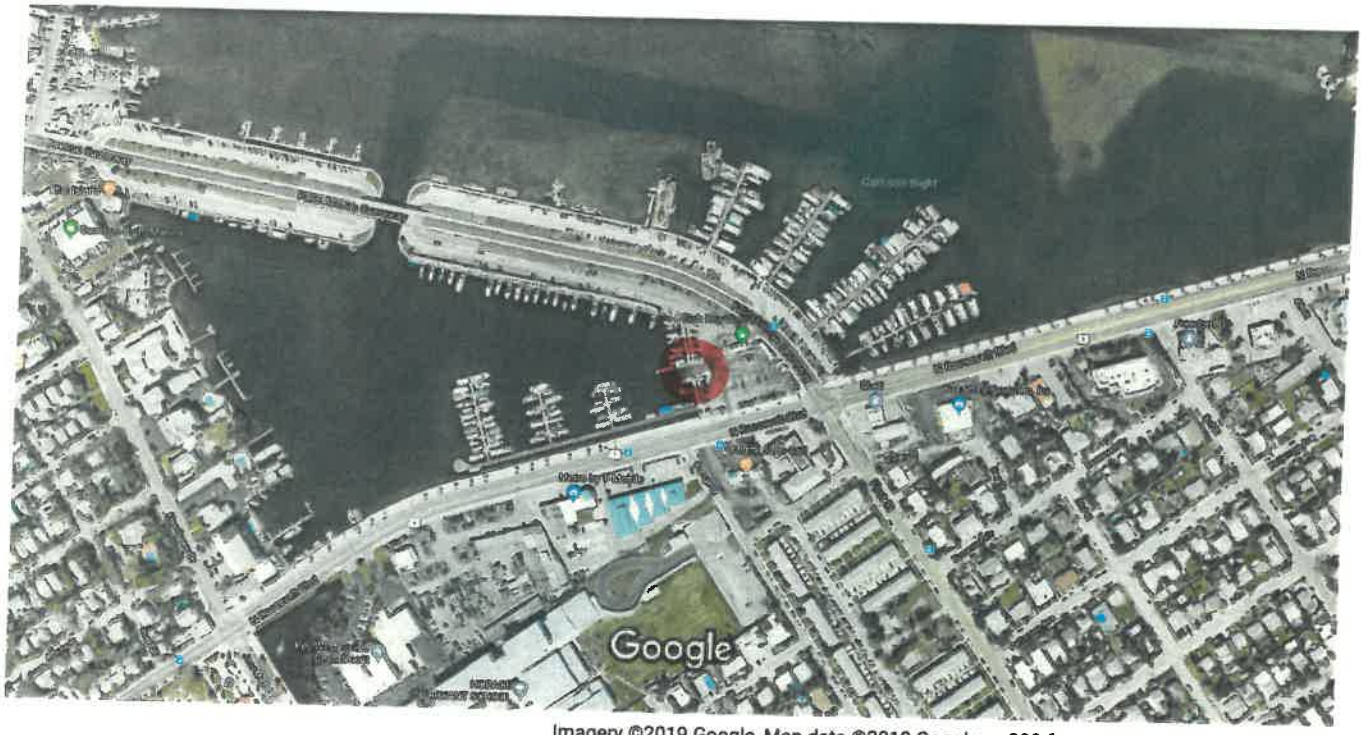

Imagery ©2019 Google, Map data ©2019 Google 200 ft

62-330.051 Exempt Activities.
The activities meeting the limitations and restrictions below are exempt from permitting. However, if located in, on, or over state-owned submerged lands, they are subject to a separate authorization under chapters 253 and 258, F.S., as applicable.

(5) Dock, Pier, Boat Ramp and Other Boating-related Work –
(e) The construction and maintenance to design specifications of boat ramps in accordance with section 403.813(1)(c), F.S., where navigational access to the proposed ramp currently exists:

1. In artificial waters and residential canal systems; or
2. In any wetland or other surface waters when the ramps are open to the public; and
3. The installation of docks associated with and adjoining boat ramps constructed as part of the above ramps is limited to an area of 500 square feet or less over wetlands and other surface waters.

Section 403.813, Florida Statutes Permits issued at district centers; exceptions.—
(1) A permit is not required under this chapter, chapter 373, chapter 61-691, Laws of Florida, or chapter 25214 or chapter 25270, 1949, Laws of Florida, for activities associated with the following types of projects; however, except as otherwise provided in this subsection, this subsection does not relieve an applicant from any requirement to obtain permission to use or occupy lands owned by the Board of Trustees of the Internal Improvement Trust Fund or a water management district in its governmental or proprietary capacity or from complying with applicable local pollution control programs authorized under this chapter or other requirements of county and municipal governments:
(c) The installation and maintenance to design specifications of boat ramps on artificial bodies of water where navigational access to the proposed ramp exists or the installation of boat ramps open to the public in any waters of the state where navigational access to the proposed ramp exists and where the construction of the proposed ramp will be less than 30 feet wide and will involve the removal of less than 25 cubic yards of material from the waters of the state, and the maintenance to design specifications of such ramps; however, the material to be removed shall be placed upon a self-contained upland site so as to prevent the escape of the spoil material into the waters of the state.

UNITED STATES DEPARTMENT OF COMMERCE
National Oceanic and Atmospheric Administration
NATIONAL OCEAN SERVICE

Florida Keys National Marine Sanctuary
33 East Quay Road
Key West, FL 33040

February 7, 2019

Ms. Jessica Hogan
Department of the Army Jacksonville District Corps of Engineers
Miami Regulatory Office
9900 Southwest 107th Avenue, Suite 203
Miami, FL 33176

Dear Ms. Hogan:

NOAA Florida Keys National Marine Sanctuary (FKNMS or sanctuary) has reviewed Department of the Army Corps of Engineers (DA Corps) application no. 1999-05418 (NW-JMH). The applicant, Karen Olson, City of Key West, is requesting a permit to replace the Kingfish Pier with an identical pier within the same footprint and repair a boat ramp at the existing City Marina at Garrison Bight, located at 1801 North Roosevelt Boulevard, Key West, Monroe County, FL. The proposed activity is prohibited by FKNMS regulations at 15 CFR § 922.163(a)(3).

NOAA has reviewed the project described in the DA Corps application and has determined that the proposed project will have a negligible impact on sanctuary resources. Therefore, pursuant to 15 CFR § 922.49, NOAA does not object to the issuance of a DA Corps permit for the project as proposed, and a separate FKNMS permit will not be required.

This determination is only applicable to DA Corps application no. 1999-05418 (NW-JMH). If any changes are made to the project description in this application, DA Corps shall notify NOAA and this letter of authorization will be rescinded. Upon such notification, NOAA shall re-review the project and provide a supplementary determination. Further information on Sanctuary permit review and authorization is set forth at 15 CFR § 922.49.

This project has been assigned authorization #FKNMS-2018-154. Please contact FKNMS Permit Coordinator Joanne Delaney at Joanne.Delaney@noaa.gov if you have questions about NOAA's determination on this project. Thank you for your continued cooperation with the Florida Keys National Marine Sanctuary.

Sincerely,

Sarah Fangman
Superintendent

cc: Philip Frank, Terramar Environmental Services
Karen Olson, City of Key West

DEPARTMENT OF THE ARMY
JACKSONVILLE DISTRICT CORPS OF ENGINEERS
9900 SW 107TH AVENUE, SUITE 203
MIAMI, FL 33176

REPLY TO
ATTENTION OF

March 19, 2019

Regulatory Division
South Permits Branch
Miami Permits Section
SAJ-1999-05418 (NW-JMH)

City of Key West Port and Marine Services
c/o Karen Olson, Deputy Director
1300 White Street
Key West, FL 33040

Dear Ms. Olson:

The U.S. Army Corps of Engineers (Corps) assigned your application for a Department of the Army permit, which the Corps received on October 25, 2018, the file number SAJ-1999-05418. A review of the information and drawings provided indicates that the proposed work is to remove and replace the 8 foot wide by 390.7 foot long (3,094.6 square foot) floating dock with 24 associated pilings and an aluminum gangway, to install twenty-four 4.7 foot wide by 30 foot long (141 square foot each) floating finger piers, to remove and replace a total of 22 mooring pilings, to repair the existing 75 foot long by 28 foot wide (2,100 square foot) boat ramp via the placement of 132 square feet (7.4 cubic yards) of fill, and to install temporary floating turbidity barriers around all work areas that are in/over U.S. navigable waters. The project would affect waters of the United States associated with the Gulf of Mexico. The project is located at 1801 North Roosevelt Boulevard; legally described as 33 67 25 KW319 Garrison Bight G30-330-332, in Section 32, Township 67 South, Range 25 East, Key West, Monroe County, Florida. RE# 00072070-000000

Your project, as depicted on the enclosed drawings, is authorized by Nationwide Permit (NWP) Number 3. In addition, project specific conditions have been enclosed. This verification is valid until **March 18, 2022**. Furthermore, if you commence or are under contract to commence this activity before the date that the relevant nationwide permit is modified or revoked, you will have 12 months from the date of the modification or revocation of the NWP to complete the activity under the present terms and conditions of this nationwide permit. Please access the U.S. Army Corps of Engineers' (Corps) Jacksonville District's Regulatory Internet page to access Internet links to view the Final Nationwide Permits, Federal Register Vol. 82, dated January 6, 2017, specifically pages 1983 to 2008, and the table of Regional Conditions. The Internet page address is:

http://www.saj.usace.army.mil/Missions/Regulatory.aspx

Please be aware this Internet address is case sensitive and should be entered as it appears above. Once there you will need to click on "Source Book"; and, then click on "Nationwide Permits." These files contain the description of the Nationwide Permit authorization, the Nationwide Permit general conditions, and the regional conditions, which apply specifically to this verification for NWP 3. Enclosed is a list of the six General Conditions, which apply to all Department of the Army authorizations. You must comply with all of the special and general conditions and any project specific condition of this authorization or you may be subject to enforcement action. In the event you have not completed construction of your project within the specified time limit, a separate application or re-verification may be required.

The following special conditions are included with this verification:

1. **Reporting Address**: The Permittee shall submit all reports, notifications, documentation and correspondence required by the general and special conditions of this permit to the following address:

   a. For standard mail: U.S. Army Corps of Engineers, Regulatory Division, Special Projects and Enforcement Branch, 9900 Southwest 107th Avenue, Suite 203, Miami, Florida 33176.

   b. For electronic mail SAJ-RD-Enforcement@usace.army.mil (not to exceed 10 MB).

The Permittee shall reference this permit number, **SAJ-1999-05418** (NW-JMH), on all submittals.

2. **Self-Certification**: Within 60 days of completion of the work authorized by this permit, the Permittee shall complete the attached "Self-Certification Statement of Compliance" form (Attached) and submit it to the Corps. In the event that the completed work deviates in any manner from the authorized work, the Permittee shall describe the deviations between the work authorized by this permit and the work as constructed on the "Self-Certification Statement of Compliance" form. The description of any deviations on the "Self-Certification Statement of Compliance" form does not constitute approval of any deviations by the Corps.

3. **Assurance of Navigation and Maintenance**: The Permittee understands and agrees that, if future operations by the United States require the removal, relocation, or other alteration, of the structures or work herein authorized, or if in the opinion of the Secretary of the Army or his authorized representative, said structure or work shall cause unreasonable obstruction to the free navigation of the navigable waters, the Permittee will be required, upon due notice from the Corps of Engineers, to remove, relocate, or alter the structural work or obstructions caused thereby, without expense to the United States. No claim shall be made against the United States on account of any such removal or alteration.

4. **Sea Turtle and Smalltooth Sawfish Conditions:** The Permittee shall comply with National Marine Fisheries Service's "Sea Turtle and Smalltooth Sawfish Construction Conditions" dated March 23, 2006 (Attached).

5. **Manatee Conditions:** The Permittee shall comply with the "Standard Manatee Conditions for In-Water Work – 2011" (Attached).

6. **Turbidity Barriers**: Prior to the initiation of any of the work authorized by this permit, the Permittee shall install floating turbidity barriers with weighted skirts that extend to within 1 foot of the bottom around all work areas that are in, or adjacent to, surface waters. The turbidity barriers shall remain in place and be maintained until the authorized work has been completed and all suspended and erodible materials have been stabilized. Turbidity barriers shall be removed upon stabilization of the work area.

7. **Posting of Permit:** The Permittee shall ensure that all contractors, sub-contractors, and entities associated with the implementation of the project review, understand, and comply with the approved plans and special conditions made part of this permit. The Permittee shall inform all parties associated with the activity of the construction area boundaries, and the location of adjacent *wetland shoreline* to be avoided. Complete copies of the permit and approved plans shall be available at the construction site at all times. Failure to comply with the approved plans and permit special conditions may subject the Permittee to enforcement action.

8. **Agency Changes/Approvals:** Should any other agency require and/or approve changes to the work authorized or obligated by this permit, the Permittee is advised a re-verification to this permit instrument is required prior to initiation of those changes. It is the Permittee's responsibility to request a re-verification of this permit from the **Miami** Permits Section. The Corps reserves the right to fully evaluate, amend, and approve or deny the request for re-verification of this permit.

9. **Historic Properties**:
   a. No structure or work shall adversely affect impact or disturb properties listed in the National Register of Historic Places (NRHP) or those eligible for inclusion in the NRHP.

   b. If during the ground disturbing activities and construction work within the permit area, there are archaeological/cultural materials encountered which were not the subject of a previous cultural resources assessment survey (and which shall include, but not be limited to: pottery, modified shell, flora, fauna, human remains, ceramics, stone tools or metal implements, dugout canoes, evidence of structures or any other physical remains that could be associated with Native American cultures or early colonial or American settlement), the Permittee shall immediately stop all work and ground-disturbing activities within a 100-meter diameter of the discovery and notify the Corps within the same business day (8

hours). The Corps shall then notify the Florida State Historic Preservation Officer (SHPO) and the appropriate Tribal Historic Preservation Officer(s) (THPO(s)) to assess the significance of the discovery and devise appropriate actions.

c. Additional cultural resources assessments may be required of the permit area in the case of unanticipated discoveries as referenced in accordance with the above Special Condition ; and if deemed necessary by the SHPO, THPO(s), or Corps, in accordance with 36 CFR 800 or 33 CFR 325, Appendix C (5). Based, on the circumstances of the discovery, equity to all parties, and considerations of the public interest, the Corps may modify, suspend or revoke the permit in accordance with 33 CFR Part 325.7. Such activity shall not resume on non-federal lands without written authorization from the SHPO for finds under his or her jurisdiction, and from the Corps.

d. In the unlikely event that unmarked human remains are identified on non-federal lands, they will be treated in accordance with Section 872.05 Florida Statutes. All work and ground disturbing activities within a 100-meter diameter of the unmarked human remains shall immediately cease and the Permittee shall immediately notify the medical examiner, Corps, and State Archeologist within the same business day (8-hours). The Corps shall then notify the appropriate SHPO and THPO(s). Based, on the circumstances of the discovery, equity to all parties, and considerations of the public interest, the Corps may modify, suspend or revoke the permit in accordance with 33 CFR Part 325.7. Such activity shall not resume without written authorization from the State Archeologist and from the Corps.

10. **Project Drawings:** The project must be completed in accordance with the enclosed construction drawings (pages 1-9), date-stamped by the U.S. Army Corps of Engineers (Corps) on January 31, 2019, and the general and special conditions which are incorporated in, and made a part of, the permit.

11. **Avoided Wetland Area:** The Permittee shall avoid the remaining 4,746 square feet of onsite wetland shoreline, as detailed on the drawings date-stamped by the Corps on January 31, 2019 (Sheet 3 of 9). These natural wetland areas were avoided as part of the permit application review process and therefore will not be disturbed by any dredging, filling, mechanized land clearing, agricultural activities, or other construction work whatsoever. The Corps reserves the right to deny review of any requests for future impacts to these natural wetland areas.

12. **Project Design Criteria (PDCs) for In-Water Activities:** The Permittee shall comply with National Marine Fisheries Service's "PDCs for In-Water Activities" dated November 20, 2017 (Attached).

13. **Daylight Hours:** All activities must be completed during daylight hours.

14. **Construction Location:** Project construction shall take place from uplands or from floating equipment (e.g., barge); prop or wheel-washing is prohibited.

15. **Educational Signs (Docking Facility)**: signs must be posted in a visible location(s), alerting users of listed species in the area susceptible to vessel strikes and hook-and-line captures. The most current version of the signs that must be downloaded and sign installation guidance are available at: (http://sero.nmfs.noaa.gov/protected_resources/section_7/protected_species_educational_signs/index.html). The signs required to be posted by area are stated below:

- All projects in Florida shall use the Save Sea Turtle, Sawfish, and Dolphin sign. These signs shall include contact information to the sea turtle and marine mammal stranding networks and smalltooth sawfish encounter database.

16. **Educational Signs (Boat Ramp)**: All commercial or public boat ramps must have signs posted in a visible location(s), alerting boaters of listed species in the area susceptible to vessel strikes or hook-and-line captures. These signs shall include contact information for the sea turtle and marine mammal stranding networks and smalltooth sawfish encounter database. Please visit our website (http://sero.nmfs.noaa.gov/protected_resources/section_7/protected_species_educational_signs/index.html) to determine which signs are required for your area, for sign installation guidance, and to download the most current version of the signs.

17. **Monofilament Recycling Bins (Docking Facility)**: monofilament recycling bins must be provided at the docking facility to reduce the risk of turtle or sawfish entanglement in, or ingestion of, marine debris. Monofilament recycling bins must:

a. Be constructed and labeled according to the instructions provided at http://mrrp.myfwc.com.

b. Be maintained in working order and emptied frequently (according to http://mrrp.myfwc.com standards) so that they do not overflow.

18. **Monofilament Recycling Bins (Boat Ramp)**: All commercial and public boat ramps also must install and maintain for the life of the facility monofilament recycling bins to reduce the risk of turtle or sawfish entanglement in or ingestion of marine debris. Monofilament recycling bins must:

a. Be constructed and labeled according to the instructions provided at http://mrrp.myfwc.com or any equivalent guidance for the U.S. Caribbean.

b. Be maintained for the life of the facility in working order and emptied frequently so that they do not overflow.

19. **Restrictions on Dredged Material and Disposal:** Excavation is limited to the area necessary for site preparation. All excavated material shall be removed to an area that is not waters of the United States, as that term is defined and interpreted under the CWA, including wetlands.

This letter of authorization does not give absolute Federal authority to perform the work as specified on your application. The proposed work may be subject to local building restrictions mandated by the National Flood Insurance Program. You should contact your local office that issues building permits to determine if your site is located in a flood-prone area, and if you must comply with the local building requirements mandated by the National Flood Insurance Program.

If you are unable to access the internet or require a hardcopy of any of the conditions, limitations, or expiration date for the above referenced NWP, please contact me by telephone at 305-779-6052.

Thank you for your cooperation with our permit program. The Corps Jacksonville District Regulatory Division is committed to improving service to our customers. We strive to perform our duty in a friendly and timely manner while working to preserve our environment. We invite you to complete our automated Customer Service Survey at http://corpsmapu.usace.army.mil/cm_apex/f?p=regulatory_survey. Please be aware this Internet address is case sensitive; and, you will need to enter it exactly as it appears above. Your input is appreciated – favorable or otherwise.

Sincerely,

Jessica Hogan

Digitally signed by HOGAN.JESSICA.M.1513506631
Date: 2019.03.19 10:31:20 -04'00'

Jessica Hogan
Project Manager

Enclosures
General Conditions
Self-Certification Statement of Compliance
Permit Transfer Request
Site plans dated by the Corps January 31, 2019
FWS Standard Manatee Conditions for In-Water Work (2011)
NMFS Sea Turtle and Smalltooth Sawfish Construction Conditions (2006)
NMFS JaxBO Project Design Criteria (PDCs) for In-Water Activities

Copy/ies Furnished:
Terramar Environmental Services, Inc.
bcc:
CESAJ-RD-PE

GENERAL CONDITIONS
33 CFR PART 320-330

1. The time limit for completing the work authorized ends on **March 18, 2022**.

2. You must maintain the activity authorized by this permit in good condition and in conformance with the terms and conditions of this permit. You are not relieved of this requirement if you abandon the permitted activity, although you may make a good faith transfer to a third party in compliance with General Condition 4 below. Should you wish to cease to maintain the authorized activity or should you desire to abandon it without a good faith transfer, you must obtain a modification of this permit from this office, which may require restoration of the area.

3. If you discover any previously unknown historic or archeological remains while accomplishing the activity authorized by this permit, you must immediately notify this office of what you have found. We will initiate the Federal and state coordination required to determine if the remains warrant a recovery effort of if the site is eligible for listing in the National Register of Historic Places.

4. If you sell the property associated with this permit you must obtain the signature of the new owner in the space provided and forward a copy of the permit to this office to validate the transfer of this authorization.

5. If a conditioned water quality certification has been issued for your project, you must comply with the conditions specified in the certification as special conditions to this permit. For your convenience, a copy of the certification is attached if it contains such conditions.

6. You must allow a representative from this office to inspect the authorized activity at any time deemed necessary to ensure that it is being or has been accomplished in accordance with the terms and conditions of your permit.

SELF-CERTIFICATION STATEMENT OF COMPLIANCE

Permit Number: NWP-3
Application Number: SAJ-1999-05418

Permittee's Name & Address (please print or type):_____

_____

_____

Telephone Number:_____

Location of the Work:_____

_____

Date Work Started:_____ Date Work Completed:_____

PROPERTY IS INACCESSIBLE WITHOUT PRIOR NOTIFICATION: YES _____ NO_____

TO SCHEDULE AN INSPECTION PLEASE CONTACT _____
AT _____

Description of the Work (e.g. bank stabilization, residential or commercial filling, docks, dredging,
etc.):_____

_____

Acreage or Square Feet of Impacts to Waters of the United States: _____

Describe Mitigation completed (if applicable): _____

_____

_____

Describe any Deviations from Permit (attach drawing(s) depicting the deviations):

_____

_____

****

I certify that all work, and mitigation (if applicable) was done in accordance with the limitations and conditions as described in the permit. Any deviations as described above are depicted on the attached drawing(s).

_____
Signature of Permittee

_____
Date

DEPARTMENT OF THE ARMY PERMIT TRANSFER REQUEST

PERMIT NUMBER: SAJ-1999-05418 (NW-JMH)

When the structures or work authorized by this permit are still in existence at the time the property is transferred, the terms and conditions of this permit will continue to be binding on the new owner(s) of the property. Although the construction period for works authorized by Department of the Army permits is finite, the permit itself, with its limitations, does not expire.

To validate the transfer of this permit and the associated responsibilities associated with compliance with its terms and conditions, have the transferee sign and date below and mail to the U.S. Army Corps of Engineers, Enforcement Section, Post Office Box 4970, Jacksonville, FL 32232-0019 or electronic mail at saj-rd-enforcement@usace.army.mil.

_____
(TRANSFEREE-SIGNATURE)

_____
(DATE)

_____
(NAME-PRINTED)

_____

_____
(MAILING ADDRESS)

_____
(CITY, STATE, ZIP CODE)

_____
(SUBDIVISION)

_____ _____
(LOT) **(BLOCK)**

_____
(STREET ADDRESS)

Google Maps

Imagery ©2019 Google, Map data ©2019 Google 200 ft

SAJ-1999-05418 (City of Key West) (Page 7 of 9) January 31, 2019

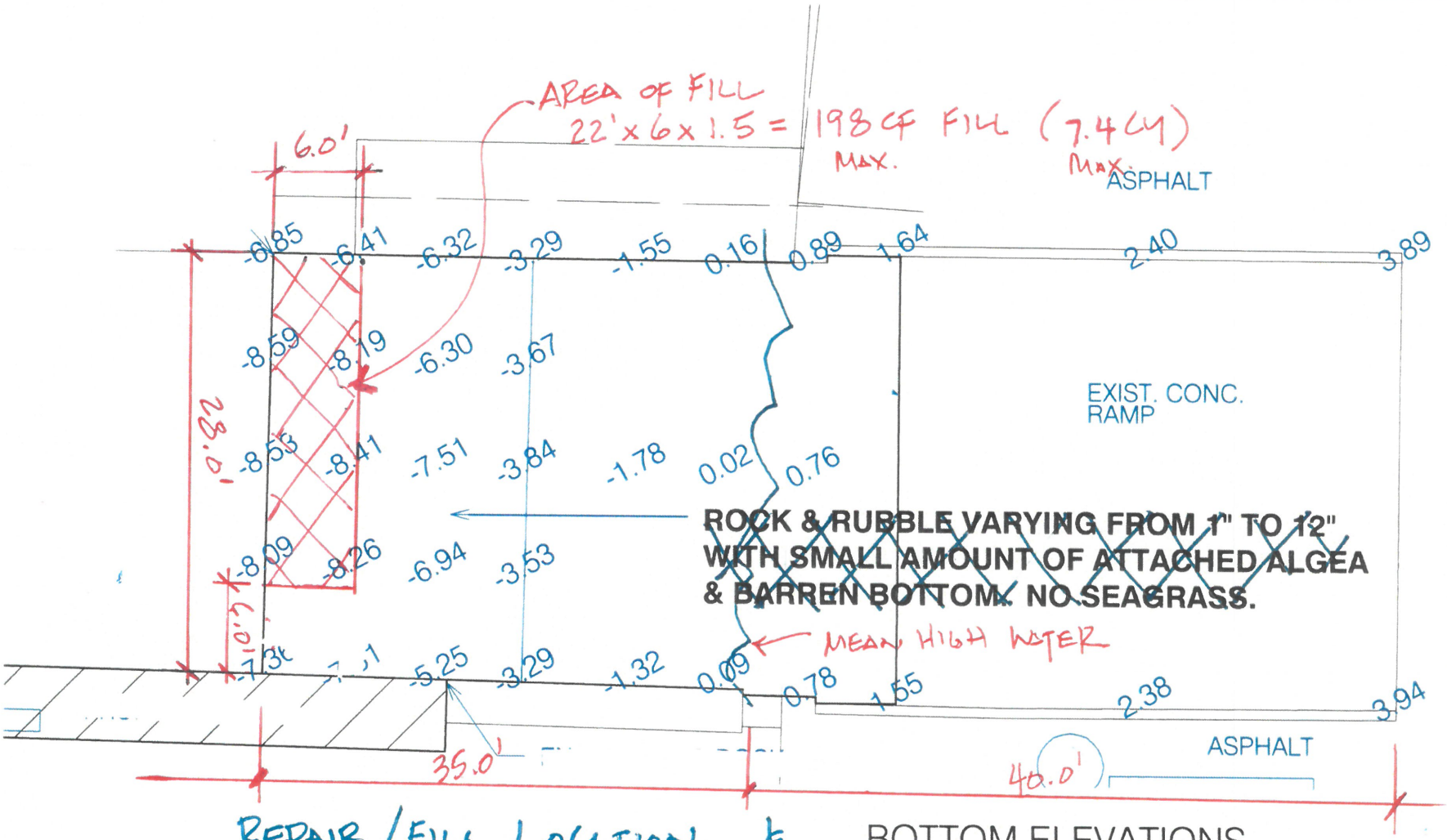

REPAIR / FILL LOCATION & BOTTOM ELEVATIONS

1"=10'

FILL = 7.4 CY MAX

1-31-19 KMD

BAR IS ONE INCH ON ORIGINAL DRAWING.
0 — 1"
IF NOT ONE INCH ON THIS SHEET, ADJUST SCALES ACCORDINGLY.

City of Key West
Engineering Services
604 Simonton Street
Key West, Florida 33040
(305) 292-8195

GARRISON BIGHT MARINA
BOAT LAUNCH RAMP & DOCK EXTENSION

~~DMA~~
~~AM-L~~
1"=10'

REPAIR / FILL LOCATION

GB 2025
~~A 333~~
1 OF 1

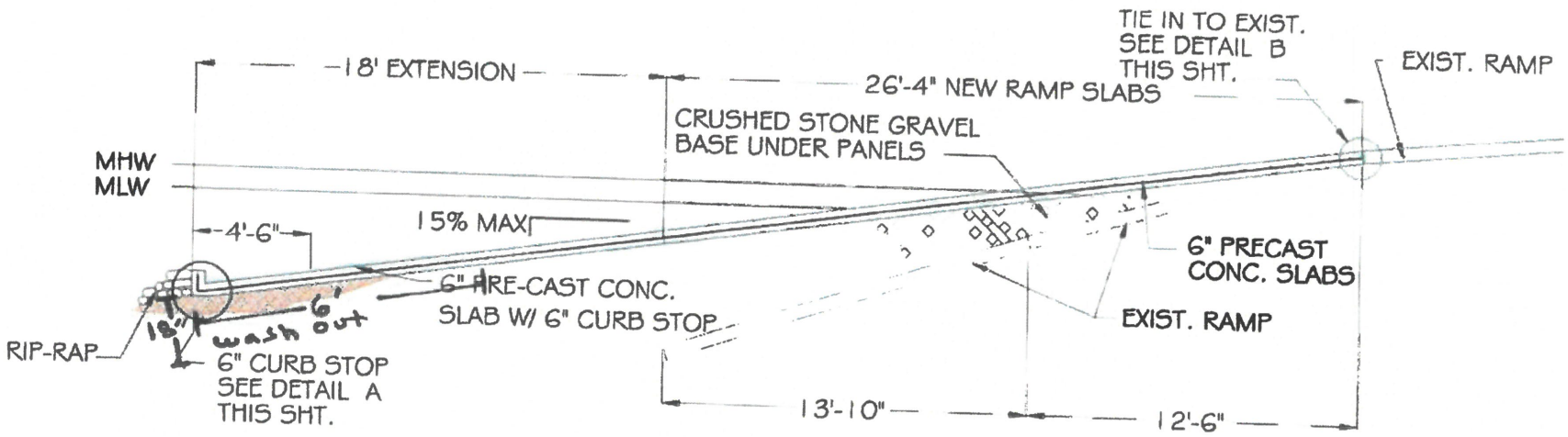

NOTE: RAMP SLOPE IS EXAGGERATED FOR ILLUSTRATION PURPOSES.

PLACE NEW PRECAST PANELS ON TOP OF EXIST. RAMP TO ACHIEVE NEW MAX 15% SLOPE. PROVIDE CRUSHED STONE GRAVEL/ GROUT BASE UNDER PANELS.

RAMP [

NTS

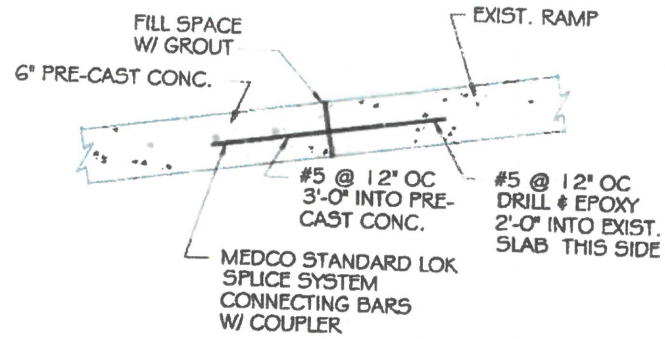

RAMP TIE-IN - DETAIL B

NTS

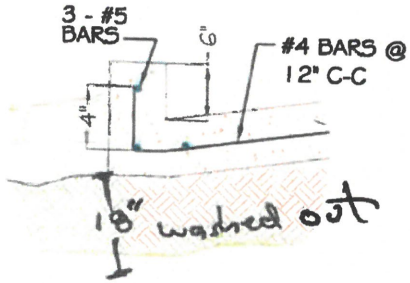

6" CURB STOP - DETAIL A

N.T.S.

BAR IS ONE INCH ON ORIGINAL DRAWING.

0 1"

IF NOT ONE INCH ON THIS SHEET, ADJUST SCALES ACCORDINGLY

City of Key West
Engineering Services
804 Simonton Street
Key West, Florida 33040
(305) 292-8195

GARRISON BIGHT MARINA
BOAT LAUNCH RAMP

DMA
AM-L
NTS

RAMP SECTIONS AND DETAILS

GB 2025
A-333
1-15-19
3 of 5

STANDARD MANATEE CONDITIONS FOR IN-WATER WORK

2011

The permittee shall comply with the following conditions intended to protect manatees from direct project effects:

a. All personnel associated with the project shall be instructed about the presence of manatees and manatee speed zones, and the need to avoid collisions with and injury to manatees. The permittee shall advise all construction personnel that there are civil and criminal penalties for harming, harassing, or killing manatees which are protected under the Marine Mammal Protection Act, the Endangered Species Act, and the Florida Manatee Sanctuary Act.

b. All vessels associated with the construction project shall operate at "Idle Speed/No Wake" at all times while in the immediate area and while in water where the draft of the vessel provides less than a four-foot clearance from the bottom. All vessels will follow routes of deep water whenever possible.

c. Siltation or turbidity barriers shall be made of material in which manatees cannot become entangled, shall be properly secured, and shall be regularly monitored to avoid manatee entanglement or entrapment. Barriers must not impede manatee movement.

d. All on-site project personnel are responsible for observing water-related activities for the presence of manatee(s). All in-water operations, including vessels, must be shutdown if a manatee(s) comes within 50 feet of the operation. Activities will not resume until the manatee(s) has moved beyond the 50-foot radius of the project operation, or until 30 minutes elapses if the manatee(s) has not reappeared within 50 feet of the operation. Animals must not be herded away or harassed into leaving.

e. Any collision with or injury to a manatee shall be reported immediately to the Florida Fish and Wildlife Conservation Commission (FWC) Hotline at 1-888-404-3922. Collision and/or injury should also be reported to the U.S. Fish and Wildlife Service in Jacksonville (1-904-731-3336) for north Florida or Vero Beach (1-772-562-3909) for south Florida, and to FWC at ImperiledSpecies@myFWC.com

f. Temporary signs concerning manatees shall be posted prior to and during all in-water project activities. All signs are to be removed by the permittee upon completion of the project. Temporary signs that have already been approved for this use by the FWC must be used. One sign which reads *Caution: Boaters* must be posted. A second sign measuring at least 8 ½" by 11" explaining the requirements for "Idle Speed/No Wake" and the shut down of in-water operations must be posted in a location prominently visible to all personnel engaged in water-related activities. These signs can be viewed at MyFWC.com/manatee. Questions concerning these signs can be sent to the email address listed above.

CAUTION: MANATEE HABITAT

All project vessels

IDLE SPEED / NO WAKE

When a manatee is within 50 feet of work
all in-water activities must

SHUT DOWN

Report any collision with or injury to a manatee:

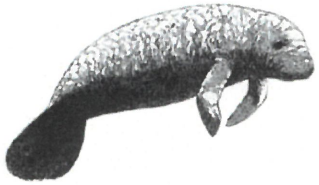

Wildlife Alert:

1-888-404-FWCC(3922)

cell *FWC or #FWC

UNITED STATES DEPARTMENT OF COMMERCE
National Oceanic and Atmospheric Administration
NATIONAL MARINE FISHERIES SERVICE
Southeast Regional Office
263 13th Avenue South
St. Petersburg, FL 33701

SEA TURTLE AND SMALLTOOTH SAWFISH CONSTRUCTION CONDITIONS

The permittee shall comply with the following protected species construction conditions:

a. The permittee shall instruct all personnel associated with the project of the potential presence of these species and the need to avoid collisions with sea turtles and smalltooth sawfish. All construction personnel are responsible for observing water-related activities for the presence of these species.

b. The permittee shall advise all construction personnel that there are civil and criminal penalties for harming, harassing, or killing sea turtles or smalltooth sawfish, which are protected under the Endangered Species Act of 1973.

c. Siltation barriers shall be made of material in which a sea turtle or smalltooth sawfish cannot become entangled, be properly secured, and be regularly monitored to avoid protected species entrapment. Barriers may not block sea turtle or smalltooth sawfish entry to or exit from designated critical habitat without prior agreement from the National Marine Fisheries Service's Protected Resources Division, St. Petersburg, Florida.

d. All vessels associated with the construction project shall operate at "no wake/idle" speeds at all times while in the construction area and while in water depths where the draft of the vessel provides less than a four-foot clearance from the bottom. All vessels will preferentially follow deep-water routes (e.g., marked channels) whenever possible.

e. If a sea turtle or smalltooth sawfish is seen within 100 yards of the active daily construction/dredging operation or vessel movement, all appropriate precautions shall be implemented to ensure its protection. These precautions shall include cessation of operation of any moving equipment closer than 50 feet of a sea turtle or smalltooth sawfish. Operation of any mechanical construction equipment shall cease immediately if a sea turtle or smalltooth sawfish is seen within a 50-ft radius of the equipment. Activities may not resume until the protected species has departed the project area of its own volition.

f. Any collision with and/or injury to a sea turtle or smalltooth sawfish shall be reported immediately to the National Marine Fisheries Service's Protected Resources Division (727-824-5312) and the local authorized sea turtle stranding/rescue organization.

g. Any special construction conditions, required of your specific project, outside these general conditions, if applicable, will be addressed in the primary consultation.

Revised: March 23, 2006
O:\forms\Sea Turtle and Smalltooth Sawfish Construction Conditions.doc

U.S. Army Corps of Engineers Jacksonville District's Programmatic Biological Opinion (JaxBO) Project Design Criteria (PDCs) for In-Water Activities

November 20, 2017

1) **(AP.7.) Education and Observation**: The permittee must ensure that all personnel associated with the project are instructed about the potential presence of species protected under the ESA and the Marine Mammal Protection Act (MMPA). All on-site project personnel are responsible for observing water-related activities for the presence of protected species. All personnel shall be advised that there are civil and criminal penalties for harming, harassing, or killing ESA-listed species or marine mammals. To determine which species may be found in the project area, please review the relevant Protected Species List at: http://sero.nmfs.noaa.gov/protected_resources/section_7/threatened_endangered/index.html

2) **(AP.8.) Reporting** of interactions with protected species:
   a) Any collision(s) with and/or injury to any sea turtle, sawfish, whale, or sturgeon occurring during the construction of a project, shall be reported immediately to NMFS's Protected Resources Division (PRD) at (1-727-824-5312) or by email to takereport.nmfsser@noaa.gov and SAJ-RD-Enforcement@usace.army.mil.
   b) Smalltooth sawfish: Report sightings to 1-844-SAWFISH or email Sawfish@MyFWC.com
   c) Sturgeon: Report dead sturgeon to 1-844-STURG 911 (1-844-788-7491) or email nmfs.ser.sturgeonnetwork@noaa.gov
   d) Sea turtles and marine mammals: Report stranded, injured, or dead animals to 1-877-WHALE HELP (1-877-942-5343).
   e) North Atlantic right whale: Report injured, dead, or entangled right whales to the USCG via VHF Channel 16.

3) **(AP.9.) Vessel Traffic and Construction Equipment**: All vessel operators must watch for and avoid collision with species protected under the ESA and MMPA. Vessel operators must avoid potential interactions with protected species and operate in accordance with the following protective measures:

   a) *Construction Equipment*:
      i) All vessels associated with the construction project shall operate at "Idle Speed/No Wake" at all times while operating in water depths where the draft of the vessel provides less than a 4-foot (ft) clearance from the bottom, and in all depths after a protected species has been observed in and has departed the area.
      ii) All vessels will follow marked channels and/or routes using the maximum water depth whenever possible.
      iii) Operation of any mechanical construction equipment, including vessels, shall cease immediately if a listed species is observed within a 50-ft radius of

construction equipment and shall not resume until the species has departed the area of its own volition.

iv) If the detection of species is not possible during certain weather conditions (e.g., fog, rain, wind), then in-water operations will cease until weather conditions improve and detection is again feasible.

b) *All Vessels*:

i) Sea turtles: Maintain a minimum distance of 150 ft.

ii) North Atlantic right whale: Maintain a minimum 1,500-ft distance (500 yards).

iii) Vessels 65 ft in length or longer must comply with the Right Whale Ship Strike Reduction Rule (50 CFR 224.105) which includes reducing speeds to 10 knots or less in Seasonal Management Areas (http://www.fisheries.noaa.gov/pr/shipstrike/).

iv) Mariners shall check various communication media for general information regarding avoiding ship strikes and specific information regarding right whale sightings in the area. These include NOAA weather radio, USCG NAVTEX broadcasts, and Notices to Mariners.

v) Marine mammals (i.e., dolphins, whales [other than North Atlantic right whales], and porpoises): Maintain a minimum distance of 300 ft.

vi) When these animals are sighted while the vessel is underway (e.g., bow-riding), attempt to remain parallel to the animal's course. Avoid excessive speed or abrupt changes in direction until they have left the area.

vii) Reduce speed to 10 knots or less when mother/calf pairs or groups of marine mammals are observed, when safety permits.

4) **(AP.10.) Turbidity Control Measures during Construction:** Turbidity must be monitored and controlled. Prior to initiating any of the work covered under this Opinion, the Permittee shall install turbidity curtains as described below. In some instances, the use of turbidity curtains may be waived by the USACE project manager if the project is deemed too minimal to generate turbidity (e.g., certain ATON installation, scientific survey device placement, marine debris removal) or if the current is too strong for the curtains to stay in place. Turbidity curtains specifications:

a) Install floating turbidity barriers with weighted skirts that extend to within 1 ft of the bottom around all work areas that are in, or adjacent to, surface waters.

b) Use these turbidity barriers throughout construction to control erosion and siltation and ensure that turbidity levels within the project area do not exceed background conditions.

c) Position turbidity barriers in a way that does not block species' entry to or exit from designated critical habitat.

d) Monitor and maintain turbidity barriers in place until the authorized work has been completed and the water quality in the project area has returned to background conditions.

e) In the range of ESA-listed corals (St. Lucie Inlet, Martin County south to the Dry Tortugas and the U.S. Caribbean) and Johnson's seagrass (Turkey Creek/Palm

Bay south to central Biscayne Bay in the lagoon systems on the east coast of Florida):

i) Projects that include upland earth moving (e.g., grading to install a building or parking lot associated with a dock and seawall project), must install sediment control barriers to prevent any upland sediments from reaching estuarine or marine waters.
ii) The turbidity curtain requirement cannot be waived for any project that moves or removes sediment (e.g., dredging, auger to create a pile, trenching to install a cableline). If turbidity curtains are not feasible in an area based on site conditions such as water current, high wave action, or stormy conditions, the project must undergo individual Section 7 consultation and is not covered under this Programmatic Opinion.

5) **(AP.11.) Entanglement:** All turbidity curtains and other in-water equipment must be properly secured with materials that reduce the risk of entanglement of marine species (described below). Turbidity curtains likewise must be made of materials that reduce the risk of entanglement of marine species.

a) In-water lines (rope, chain, and cable, including the lines to secure turbidity curtains) must be stiff, taut, and non-looping. Examples of such lines are heavy metal chains or heavy cables that do not readily loop and tangle. Flexible in-water lines, such as nylon rope or any lines that could loop or tangle, must be enclosed in a plastic or rubber sleeve/tube to add rigidity and prevent the line from looping and tangling. In all instances, no excess line is allowed in the water.
b) Turbidity curtains and other in-water equipment must be placed in a manner that does not entrap species within the construction area or block access for them to navigate around the construction area.