PROJECT MANUAL FOR:

INVITATION TO BID No. 18-026
MALLORY WHARF REFURBISHMENT

APRIL 2018

MAYOR: CRAIG CATES

COMMISSIONERS:

SAM KAUFMAN

BILLY WARDLOW

JIMMY WEEKLEY

CLAYTON LOPEZ

RICHARD PAYNE

MARGARET ROMERO

PREPARED BY:
City of Key West
Engineering Services

INFORMATION TO BIDDERS

SUBJECT:	INVITATION TO BID No. 18-026: MALLORY WHARF REFURBISHMENT
ISSUE DATE:	JUNE 15, 2018
MAIL OR SPECIAL DELIVERY REPONSES TO:	CITY CLERK'S OFFICE CITY OF KEY WEST 1300 WHITE ST KEY WEST, FL 33040
DELIVER BIDS TO:	SAME AS ABOVE
BIDS MUST BE RECEIVED:	JULY 18, 2018
NOT LATER THAN:	2:30 P.M. LOCAL TIME
DEADLINE FOR INQUIRIES:	JULY 6, 2018
FINAL ADDENDA SUBMITTED:	JULY 12, 2018

DAVE SERMAK
PURCHASING AGENT
CITY OF KEY WEST

TABLE OF CONTENTS

Page No

PART 1 - BIDDING REQUIREMENTS

Invitation to Bid 7
Instructions to Bidders 9
Bid Proposal Form 15
Florida Bid Bond 23
Anti-Kickback Affidavit 25
Public Entity Crimes Forms 26
City of Key West Indemnification Form 29
Local Vendor Certification 30
Equal Benefits for Domestic Partners 31
Cone of Silence Affidavit 32
Disclosure of Lobbying Activities Form 33
Non-Collusion Declaration and Compliance Form 34
Suspension and Debarment Certification 35
Bidder's Checklist 36

PART 2 - CONTRACT FORMS

Contract 39
Florida Performance Bond 41
Florida Payment Bond 43

PART 3 - CONDITIONS OF THE CONTRACT

General Conditions 47
Supplementary Conditions 65

PART 4 - TECHNICAL SPECIFICATIONS

PART 5 - CONSTRUCTION DRAWINGS

PART 6 - SCHEDULE OF VALUES

~ This page intentionally left blank. ~

PART 1

BIDDING REQUIREMENTS

~ This page intentionally left blank. ~

INVITATION TO BID

Sealed bids for the City of Key West Invitation to Bid (ITB No.18-026) MALLORY WHARF REFURBISHMENT, addressed to the City of Key West, will be received at the Office of the City Clerk, 1300 White St., Key West Florida, 33040 until 2:30 pm on Wednesday, July 18, 2018 and then will be publicly opened and read. Any bids received after the time and date specified will not be considered.

Please submit one (1) original and two (2) USB drives, each with one single PDF file of the entire bid package. Bid package is to be enclosed in a sealed envelope, clearly marked on the outside "MALLORY WHARF REFURBISHMENT ITB No. 18-026" addressed and delivered to the City Clerk at the address noted above.

The project includes, but is not limited to, removal, refurbishment and replacement of three mooring bollards, concrete repair to breasting dolphins and pier, mooring fender repair, and replacement of fender attachment chains and chain plates, as more fully described in the attached contract documents.

Drawings and Specifications may be obtained from Demand Star by Onvia or City of Key West website www.cityofkeywest-fl.gov. For bid package access on Demand Star, please contact Onvia at www.demandstar.com or call 1-800-711-1712.

A **mandatory pre-bid meeting** will be held on Tuesday, June 26, 2018 at 10:00 a.m. in the Commissioners' Conference Room at the City Hall located at 1300 White Street, Key West, FL 33040 and continued at the Mallory Square wharf following the Administrative component. The purpose of the meeting will be to discuss particular requirements and answer questions of the prospective bidders relative to completing this project.

EACH BID MUST BE SUBMITTED ON THE PRESCRIBED FORM AND ACCOMPANIED BY BID SECURITY AS PRESCRIBED IN THE INSTRUCTIONS TO BIDDERS, PAYABLE TO THE CITY OF KEY WEST, FLORIDA, IN AN AMOUNT NOT LESS THAN FIVE (5) PERCENT OF THE AMOUNT BID.

THE BIDDER MUST BE A LICENSED CONTRACTOR BY THE STATE OF FLORIDA AND SUBMIT PROOF OF SUCH WITH THE BID.

The successful Bidder will be required to furnish the necessary additional bond(s) for the faithful performance of the Contract, as prescribed in the Bidding Documents. The Bidder shall furnish documentation showing that he is in compliance with the licensing requirements of the provisions of Chapter 66 Section 87 of the Code of Ordinances of the City of Key West within 10 days following the Notice of Award and must demonstrate that he holds at a minimum, a City of Key West Business Tax Receipt.

All bid bonds, contract bonds, insurance contracts, and certificates of insurance shall be either executed by or countersigned by a licensed resident agent of the Surety or Insurance Company having his place of business in the State of Florida, and in all ways complying with the insurance laws of the State of Florida. Further, the said Surety or Insurance Company shall be duly licensed and qualified to do business in the State of Florida.

Before a Contract will be awarded for the work contemplated herein, the CITY will conduct such investigation as is necessary to determine the performance record and ability of the apparent low Bidder

to perform the size and type of work specified under this Contract. Upon request, the Bidder shall submit such information as deemed necessary by the CITY to evaluate the Bidder's qualifications.

For information concerning the proposed work or for appointment to visit the site of the proposed work, contact Steve McAlearney, Engineering Services Department for the City of Key West at (305) 809-3747 or smcalearney@cityofkeywest-fl.gov.

As stated above, at the time of the bid submittal the Bidder must provide satisfactory documentation of State Licenses. The Bidder shall furnish documentation showing that he is in compliance with the licensing requirements of County, and City licenses as would be required within ten days of the award. The successful Bidder must also be able to satisfy the City Attorney as to such insurance coverage and legal requirements as may be demanded by the Bid in question.

The City may reject bids for any and/or all of the following reasons: (1) for budgetary reasons, (2) if the bidder misstates or conceals a material fact in its bid, (3) if the bid does not strictly conform to the law or is non-responsive to the bid requirements, (4) if the bid is conditional, (5) if a change of circumstances occurs making the purpose of the bid unnecessary to the City, or (6) if such rejection is in the best interest of the City. The City may also waive any minor formalities or irregularities in any bid.

* * * * * *

INSTRUCTIONS TO BIDDERS

1. CONTRACT DOCUMENTS

A. FORMAT

The Contract Documents are divided into parts, divisions, and sections for convenient organization and reference. Generally, there has been no attempt to divide the sections into work performed by the various building trades, work by separate subcontractors, or work required for separate facilities in the project.

B. DOCUMENT INTERPRETATION

The separate sections contained within these Contract Documents are intended to be mutually cooperative and to provide all details reasonably required for the execution of the proposed work.

Should there be any doubt as to the meaning or intent of said Contract Documents, the Bidder should request of Steve McAlearney (smcalearney@cityofkeywest-fl.gov) in writing (no later than close-of-business July 6, 2018) an interpretation thereof. Any interpretation or change in said Contract Documents will be made only in writing in the form of Addenda to the documents which will be furnished to all registered holders of Contract Documents. Bidders shall submit with their Proposals, or indicate receipt of, all Addenda. The CITY will not be responsible for any other explanation or interpretations of said Documents.

2. GENERAL DESCRIPTION OF THE PROJECT

A general description of the work to be done is contained in the Invitation to Bid. The scope is specified in applicable parts of these Contract Documents.

3. QUALIFICATION OF CONTRACTORS

The prospective Bidders must meet the statutorily prescribed requirements before award of Contract by the CITY. Bidders must hold or obtain all licenses and/or certificates as required by the State and Local Statutes to bid and perform the work specified herein.

4. BIDDER'S UNDERSTANDING

Each Bidder must inform himself of the conditions relating to the execution of the work, and it is assumed that he will inspect the site and make himself thoroughly familiar with all the Contract Documents. Failure to do so will not relieve the successful Bidder of his obligation to enter into a Contract and complete the contemplated work in strict accordance with the Contract Documents. It shall be the Bidder's obligation to verify for himself and to his complete satisfaction all information concerning site conditions.

The CITY will make available to prospective Bidders upon request and at the office of the CITY Engineer, prior to bid opening, any information that he may have as to conditions and topography at the worksite.

Information derived from inspection of topographic maps, or from Drawings showing location of utilities and structures, will not in any way relieve the Contractor from any risk, or from properly examining the Site and making such additional investigations as he may elect, or from properly fulfilling all the terms of the Contract Documents.

Each Bidder shall inform himself of, and the Bidder awarded a Contract shall comply with, federal, state, and local laws, statutes, and ordinances relative to the execution of the work. This requirement includes, but is not limited to, applicable regulations concerning minimum wage rates, nondiscrimination in the employment of labor, protection of public and employee safety and health, environmental protection, the protection of natural resources, fire protection, burning and non-burning requirements, permits, fees, and similar subjects.

5. TYPE OF BID

A. LUMP SUM

The Bid for the work is to be submitted on a lump sum basis. All items required to complete the work specified but not included in the Bid shall be considered incidental to those set forth in the Bid.

The Bidder shall submit a Schedule of Values with the Bid. Schedule of Values shall be broken down by bid items listed in PART 6 of the Project Manual and will be used as a basis for payment. Contractor is responsible for providing a dollar amount for each item listed on the Schedule of Values and that total shall match the amount on the Lump Sum Bid. The Bidder will be considered non-responsive if Schedule of Values is not complete or not included in Bid Package.

6. PREPARATION OF BIDS

A. GENERAL

All blank spaces in the Bid form must be filled in, as required, in BLACK ink. All price information shall be shown in both words and figures where required. No changes shall be made in the phraseology of the forms. Written amounts shall govern in case of discrepancy between the amounts stated in writing and the amounts stated in figures. In case of discrepancy between unit prices and extended totals, unit prices shall prevail.

Bids may be rejected which contains omissions, erasures, alterations, or additions of any kind, or prices uncalled for, or in which any of the prices are obviously unbalanced, or which in any manner shall fail to conform to the conditions of the published Invitation to Bid.

Only one Bid from any individual, firm, partnership, or corporation, under the same or different names, will be considered. Should it appear to the CITY that any Bidder is interested in more than one Bid for work contemplated; all Bids in which such Bidder is interested will be rejected.

B. SIGNATURE

The Bidder shall sign his Bid in the blank space provided therefore. If Bidder is a corporation, the legal name of the corporation shall be set forth above, together with the signature of the officer or officers authorized to sign Contracts on behalf of the corporation. If Bidder is a partnership, the true name of the firm shall be set forth above, together with the signature of the partner or partners authorized to sign Contracts in behalf of the partnership. If signature is by an agent, other than an officer of a corporation or a member of a partnership, a notarized power-of-attorney must be on file with the CITY prior to opening of Bids or submitted with the Bid, otherwise the Bid will be regarded as not properly authorized.

C. SPECIAL BIDDING REQUIREMENTS

The Bidder's attention is brought to the hiring practices and licenses and permits of the City of Key West. These are defined in the addition to Article 39, ORDINANCES, PERMITS, AND LICENSES, as set forth in the Supplementary Conditions.

The Bidder shall submit with bid an experience record showing his expertise in general civil and related work. Such experience record shall provide at least five current or recent projects of similar work, within the State of Florida and preferably Monroe County. For each project, the following information shall be provided:

Description and location of work
Contract amount
Dates work was performed
Owner
Name of Owner's contact person and phone number
Engineer
Name of Engineer's contact person and phone number

The bidder shall submit with his bid a list of items to be performed by his own labor and that performed by subcontractors or others.

D. ATTACHMENTS

Bidder shall complete and submit the following forms with his bid:

Anti-Kickback Affidavit
Public Entity Crimes Form
City of Key West Indemnification Form
Local Vendor Certification
Equal Benefits for Domestic Partner Affidavit
Cone of Silence Affidavit
Disclosure of Lobbying Activities Form
Non-Collusion Declaration and Compliance Form
Suspension and Debarment Certification
Bidder’s Checklist

E. PUBLIC ENTITY CRIMES FORM

Pursuant to the requirements of Chapter 287.133, Florida Statutes, pertaining to the sworn statement on Public Entity Crimes and the Convicted Vendor List, all Bidders shall submit a signed and notarized statement with their Bid on the form provided herein.

7. STATE AND LOCAL SALES AND USE TAXES

Unless the Supplementary Conditions contains a statement that the CITY is exempt from state sales tax on materials incorporated into the work due to the qualification of the work under this Contract, the Contractor, as required by the laws and statutes of the state and its political subdivisions, shall pay all state and local sales and use taxes. Prices quoted in the Bid shall include all nonexempt sales and use taxes, unless provision is made in the Bid Form to separately itemize the tax.

8. SUBMISSION OF BIDS

All BIDS must be submitted not later than the time prescribed, at the place, and in the manner set forth in the Invitation to Bid. BIDS must be made on the BID forms provided herewith, **submit one (1) original bid package and two (2) USB drives, each containing a single PDF file of the entire bid package.**

Each BID must be submitted in a sealed envelope, so marked as to indicate the Bidder's name and its contents (project name and number) without being opened, and addressed in conformance with the instructions in the Invitation to Bid.

9. MODIFICATION OR WITHDRAWAL OF BIDS

Prior to the time and date designated for receipt of BIDS, any BID submitted may be withdrawn by notice to the party receiving BIDS at the place designated for receipt of BIDS. Such notice shall be in writing over the signature of the Bidder. No BID may be withdrawn after the time scheduled for opening of BIDS, unless the time specified in paragraph AWARD OF CONTRACT of these Instructions to Bidders shall have elapsed.

10. BID SECURITY

BIDS must be accompanied by cash, a certified check, or cashier's check drawn on a bank in good standing, or a bid bond issued by a Surety authorized to issue such bonds in the state where the work is located, in the amount of five (5) percent of the total amount of the Bid submitted. This bid security shall be given as a guarantee that the Bidder will not withdraw his BID for a period of ninety (90) days after bid opening, and that if awarded the Contract, the successful Bidder will execute the attached Contract and furnish properly executed Performance and Payment Bonds, each in the full amount of the Contract price within the time specified. Agent and Surety phone numbers must be provided.

The Attorney-in-Fact who executes this bond in behalf of the Surety must attach a notarized copy of his power-of-attorney as evidence of his authority to bind the Surety on the date of execution of the bond. Where State Statute requires, certification by a resident agent shall also be provided.

If the Bidder elects to furnish a Bid Bond, he shall use the Bid Bond form bound herewith, or one conforming substantially thereto in form and content.

11. RETURN OF BID SECURITY

Within 15 days after the award of the Contract, the CITY will return the bid securities to all Bidders whose BIDS are not to be further considered in awarding the Contract. Retained bid securities will be held until the Contract has been finally executed, after which all bid securities, other than Bidders' bonds and any guarantees, which have been forfeited, will be returned to the respective Bidders whose Proposals they accompanied.

12. AWARD OF CONTRACT

Within sixty (60) calendar days after the opening of Bids, the CITY will accept one of the Bids or will act in accordance with the following paragraphs. The acceptance of the Bid will be by written notice of award, e-mailed to the office designated in the Bid, or delivered to the Bidder's representative. In the event of failure of the lowest responsive, responsible Bidder to sign the Contract and provide an acceptable Performance Bond, Payment Bond, insurance certificate(s) and evidence of holding required licenses and certificates, the Owner may award the Contract to the next lowest responsive, responsible Bidder. Such award, if made, will be made within ninety (90) days after the opening of Bids.

The CITY reserves the right to accept or reject any or all Bids, and to waive any informalities and irregularities in said Bids.

13. BASIS OF AWARD

The award will be made by the Owner based on the Total Lump Sum Bid from the lowest, responsive, responsible BIDDER which, in the Owner's sole and absolute judgment will best serve the interest of the Owner.

14. EXECUTION OF CONTRACT

The successful Bidder shall, within ten (10) working days after receiving Notice of Award, sign and deliver to the CITY an original Contract and two (2) copies in the form hereto attached, together with the insurance certificate examples of the bonds as required in the Contract Documents and evidence of holding required licenses and certificates. Within 10 working days after receiving the signed Contract from the successful Bidder, the City's authorized agent will sign the Contract. Signature by both parties constitutes execution of the Contract. The contract shall be executed on the basis on available funding and respective lump sum fee.

15. CONTRACT BONDS

A. PERFORMANCE AND PAYMENT BONDS

If Bid Alternate is selected by the City, the successful Bidder shall file with the CITY, at the time of delivery of the signed Contract, a Performance Bond and Payment Bond on the form bound herewith, each in the full amount of the Contract price in accordance with the requirements of Florida Statutes Section 255.05 or 713.23, as applicable, as security for the faithful performance of the Contract and the payment of all persons supplying labor and materials for the construction of the work, and to cover all guarantees against defective workmanship or materials, or both, during the warranty period following the date of final acceptance of the work by the CITY. The Surety furnishing this bond shall have a sound financial standing and a record of service satisfactory to the CITY, shall be authorized to do business in the State of Florida, and shall be listed on the current U.S. Department of Treasury Circular Number 570, or amendments thereto in the Federal Register, of acceptable Sureties for federal projects. The CONTRACTOR shall supply the OWNER with phone numbers, addresses, and contacts for the Surety and their agents. Pursuant to Section 255.05(7), Florida Statutes, in lieu of the bond required by law, the contractor may file with the city an alternative form of security in the form of cash, a money order, a certified check, a cashier's check or an irrevocable letter of credit.

B. POWER-OF-ATTORNEY

The Attorney-in-Fact (Resident Agent) who executes this Performance and Payment Bond in behalf of the Surety must attach a notarized copy of his power-of-attorney as evidence of his authority to bind the Surety on the date of execution of the bond. All Contracts, Performance and Payment Bonds, and respective powers-of-attorney will have the same date.

16. FAILURE TO EXECUTE CONTRACT AND FURNISH BOND

The Bidder who has a Contract awarded to him and who fails to promptly and properly execute

the Contract or furnish the required Bonds shall forfeit the bid security that accompanied his bid, and the bid security shall be retained as liquidated damages by the CITY, and it is agreed that this said sum is a fair estimate of the amount of damages the CITY will sustain in case the Bidder fails to enter into a Contract or furnish the required Bonds. Bid security deposited in the form of cash, a certified check, or cashier's check shall be subject to the same requirement as a Bid Bond.

17. PERFORMANCE OF WORK BY CONTRACTOR

Each Bidder must furnish with his Bid a list of the items that he will perform with his own forces and the estimated total cost of these items.

18. TIME OF COMPLETION

The time of completion of the work to be performed under this Contract is the essence of this Contract. **To minimize impact on cruise ship operations, and assuming Commission approves Award at August 7 meeting, all work must be completed between August 21, 2018, and October 20, 2018.** Delays and extensions of time may be allowed in accordance with the provisions stated in the General Conditions. When the Contractor receives a Notice to Proceed, he shall commence work as soon as possible and shall complete all work within the number of calendar days stipulated in this Bid. The term of this contract will not exceed **60 calendar** days with ALL work complete and final invoice and lien releases submitted to the CITY.

* * * * * *

BID PROPOSAL FORM

NOTE TO BIDDER: Use BLACK ink for completing this form.

To: The City of Key West

Address: 1300 White St, Key West, Florida 33040

Project Title: MALLORY WHARF REFURBISHMENT

Bidder's contact person for additional information on this Bid:

Company Name: _____

Contact Name: _____

Email & Telephone: _____

BIDDER'S DECLARATION AND UNDERSTANDING

The undersigned, hereinafter called the Bidder, declares that the only persons or parties interested in this Bid are those named herein, that this Bid is, in all respects, fair and without fraud, that it is made without collusion with any official of the Owner, and that the Bid is made without any connection or collusion with any person submitting another Bid on this Contract.

The Bidder further declares that he has carefully examined the Contract Documents for the construction of the project, that he has personally inspected the site, that he has satisfied himself as to the quantities involved, including materials and equipment, and conditions of work involved, including the fact that the description of the quantities of work and materials, as included herein, is brief and is intended only to indicate the general nature of the work and to identify the said quantities with the detailed requirements of the Contract Documents, and that this Bid is made according to the provisions and under the terms of the Contract Documents, which Documents are hereby made a part of this Bid.

CONTRACT EXECUTION AND BONDS

The Bidder agrees that if this Bid is accepted, he will, within 10 days, not including Sundays and legal holidays, after Notice of Award, sign the Contract in the form annexed hereto, and will at that time, deliver to the Owner examples of the Performance Bond and Payment Bond required herein, and evidence of holding required licenses and certificates, and will, to the extent of his Bid, furnish all machinery, tools, apparatus, and other means of construction and do the Work and furnish all the materials necessary to complete all work as specified or indicated in the Contract Documents.

START OF CONSTRUCTION AND CONTRACT COMPLETION TIME

The Bidder further agrees to begin work within 14 calendar days and to complete the project, in all respects, within 60 calendar days after the date of the initial Notice to Proceed. **To minimize impact on cruise ship operations, and assuming Commission approves Award at August 7 meeting, all work must be completed between August 21, 2018, and October 20, 2018.**

BID PROPOSAL (continued)

LIQUIDATED DAMAGES

In the event the Bidder is awarded the Contract and shall fail to complete the Work within the time limit or extended time limit agreed upon, as more particularly set forth in the Contract Documents, liquidated damages shall be paid to the Owner at the rate of **$900.00 per day** for all Work awarded until the Work has been satisfactorily completed as provided by the Contract Documents. Sundays and legal holidays shall be excluded in determining days in default. Owner will recover such liquidated damages by deducting the amount owed from the final payment or any retainage held by the Owner.

ADDENDA

The Bidder hereby acknowledges that he has received Addenda No's. ____, _____, ____, _____, ____, ____, (Bidder shall insert No. of each Addendum received) and agrees that all addenda issued are hereby made part of the Contract Documents, and the Bidder further agrees that his Bid(s) includes all impacts resulting from said addenda.

SALES AND USE TAXES

The Bidder agrees that all federal, state, and local sales and use taxes are included in the stated bid prices for the work.

LUMP SUM ITEMS

The Bidder further proposes to accept as full payment for the work proposed herein the amounts computed under the provisions of the Contract Documents and based on the following lump sum amounts. The Bidder agrees that the lump sum represents a true measure of the labor and materials required to perform the work, including all allowances for overhead and profit for each type and unit of work called for in these Contract Documents. Bidder further acknowledges that bid includes any permits required by the City of Key West and any Regulatory Agencies. The amounts shall be shown in both words and figures. In case of discrepancy, the amount shown in words shall govern.

LUMP SUM BASE BID $_____

UNIDENTIFIED REPAIR ALLOCATION $_____20,000_____

TOTAL LUMP SUM BID:

$_____Dollars & _____Cents

amount written in words

BID ALTERNATES

1. Furnish 100% Performance & Payment Bonds (Lump Sum)

$_____

2. New Bollards in Lieu of Refurbishment (Lump Sum)

$_____

NOTE: OWNER HAS RIGHT TO ACCEPT OR REJECT ANY, ALL OR NO BID ALTERNATE ITEMS. THE TOTAL OF BASE BID PLUS THE SUM OF OWNER SELECTED BID ALTERNATES WILL BE BASIS OF EVALUATING LOW BIDDER AND BASIS OF AWARD.

BID PROPOSAL (continued)

The Bidder shall submit a Schedule of Values with the Bid. Schedule of Values shall be broken down by bid items listed in PART 6 of the PROJECT MANUAL and will be used as a basis for payment.
Contractor is responsible for providing a dollar amount for each item listed on the Schedule of Values and that total shall match the amount on the Bid Lump Sum. The Bidder will be considered non-responsive if Schedule of Values is not complete and or not included in Bid Package.

Payment for subcontractors, materials and equipment authorized by the Owner in a written Change Order but not listed in the above Bid will be provided at the supplier's invoice plus 10 %.

BID PROPOSAL
(continued)

SUBCONTRACTORS

The Bidder further proposes that the following subcontracting firms or businesses will be awarded subcontracts for the following portions of the work in the event that the Bidder is awarded the Contract:

_____
Name

_____ _____
Trade Percent of Total Base Bid

_____, _____, _____, _____
Street City State Zip

_____
Name

_____ _____
Trade Percent of Total Base Bid

_____, _____, _____, _____
Street City State Zip

_____
Name

_____ _____
Trade Percent of Total Base Bid

_____, _____, _____, _____
Street City State Zip

_____
Name

_____ _____
Trade Percent of Total Base Bid

_____, _____, _____, _____
Street City State Zip

_____
Name

_____ _____
Trade Percent of Total Base Bid

_____, _____, _____, _____
Street City State Zip

BID PROPOSAL (continued)

SURETY

_____ whose address is

_____, _____, _____, _____
Street City State Zip

BIDDER

The name of the Bidder submitting this Bid is:

_____ doing business at

_____, _____, _____, _____
Street City State Zip

which is the address to which all communications concerned with this Bid and with the Contract shall be sent.

The names of the principal officers of the corporation submitting this Bid, or of the partnership, or of all persons interested in this Bid as principals are as follows:

_____ _____

_____ _____

_____ _____

_____ _____

_____ _____

BID PROPOSAL (continued)

If Sole Proprietor or Partnership

IN WITNESS hereto the undersigned has set his (its) hand this _____ day of _____ 20___.

_____
Signature of Bidder

_____
Title

If Corporation

IN WITNESS WHEREOF the undersigned corporation has caused this instrument to be executed and its seal affixed by its duly authorized officers this _____ day of _____ 20___.

(SEAL)

_____
Name of Corporation

By _____

Title _____

Attest_____

Sworn and subscribed before this _____ day of _____, 20____

NOTARY PUBLIC, State of _____, at Large

My Commission Expires: _____

******

EXPERIENCE OF BIDDER

The Bidder states that he is an experienced CONTRACTOR and has completed similar projects within the last 5 years.

(List similar projects, with types, names of OWNERs, construction costs, ENGINEERs, and references with phone numbers. Use additional sheets if necessary.)

_____

_____

_____

_____

_____

_____

_____

_____

_____

_____

_____

_____

_____

_____

_____

******

~ This page intentionally left blank. ~

FLORIDA BID BOND

BOND NO. _____

AMOUNT: $_____

KNOW ALL MEN BY THESE PRESENTS, that _____

_____

hereinafter called the PRINCIPAL, and _____

_____

a corporation duly organized under the laws of the State of _____

having its principal place of business at _____

_____in the State of _____,

and authorized to do business in the State of Florida, as SURETY, are held and firmly bound unto The CITY OF KEY WEST called the OBLIGEE, in the sum of_____

_____ _____ DOLLARS ($_____) for the payment for which we bind ourselves, our heirs, executors, administrators, successors, and assigns, jointly and severally, firmly by these present.

THE CONDITION OF THIS BOND IS SUCH THAT:

WHEREAS, the PRINCIPAL is herewith submitting his or its Bid Proposal for MALLORY WHARF REFURBISHMENT, said Bid Proposal, by reference thereto, being hereby made a part hereof.

WHEREAS, the PRINCIPAL contemplates submitting or has submitted a bid to the OBLIGEE for the furnishing of all labor, materials (except those to be specifically furnished by the CITY), equipment, machinery, tools, apparatus, means of transportation for, and the performance of the work covered in the Bid and the detailed Specifications, entitled:

MALLORY WHARF REFURBISHMENT

WHEREAS, it was a condition precedent to the submission of said bid that a cashier's check, certified check, or bid bond in the amount of 5 percent of the base bid be submitted with said bid as a guarantee that the Bidder would, if awarded the Contract, enter into a written Contract with the

FLORIDA BID BOND (continued)

CITY for the performance of said Contract, within 10 working days after written notice having been given of the award of the Contract.

NOW, THEREFORE, the conditions of this obligation are such that if the PRINCIPAL within 10 consecutive calendar days after written notice of such acceptance, enters into a written Contract with the OBLIGEE and furnishes the Performance and Payment Bonds, each in an amount equal to 100 percent of the base bid, satisfactory to the CITY, then this obligation shall be void; otherwise the sum herein stated shall be due and payable to the OBLIGEE and the Surety herein agrees to pay said sum immediately upon demand of the OBLIGEE in good and lawful money of the United States of America, as liquidated damages for failure thereof of said PRINCIPAL.

Signed and sealed this _____ day of _____, 20___.

_____
PRINCIPAL

By_____

_____
SURETY

By _____
Attorney-In-Fact

STATE OF _____)
: SS
COUNTY OF _____)

* * * * * *

ANTI – KICKBACK AFFIDAVIT

STATE OF _____)
: SS
COUNTY OF _____)

I, the undersigned hereby duly sworn, depose and say that no portion of the sum herein bid will be paid to any employees of the City of Key West as a commission, kickback, reward or gift, directly or indirectly by me or any member of my firm or by an officer of the corporation.

By: _____

Sworn and subscribed before me this _____day of _____, 20___.

NOTARY PUBLIC, State of _____ at Large

My Commission Expires:

* * * * * *

SWORN STATEMENT UNDER SECTION 287.133(3)(A)
FLORIDA STATUTES, ON PUBLIC ENTITY CRIMES

THIS FORM MUST BE SIGNED IN THE PRESENCE OF A NOTARY PUBLIC OR OTHER OFFICER AUTHORIZED TO ADMINISTER OATHS.

1. This sworn statement is submitted with Bid for Mallory Wharf Refurbishment, City of Key West, Florida.

2. This sworn statement is submitted by_____
(name of entity submitting sworn statement)

   whose business address is _____

   _____

   and (if applicable) its Federal Employer Identification Number (FEIN) is_____

   _____

   (If the entity has no FEIN, include the Social Security Number of the individual

   signing this sworn statement _____

3. My name is _____
(please print name of individual signing)

   and my relationship to the entity named above is _____

4. I understand that a "public entity crime" as defined in Paragraph 287.133(1)(g), Florida Statutes, means a violation of any state or federal law by a person with respect to and directly related to the transaction of business with any public entity or with an agency or political subdivision of any other state or with the United States, including but not limited to, any bid or contract for goods or services to be provided to any public or an agency or political subdivision of any other state or of the United States and involving antitrust, fraud, theft, bribery, collusion, racketeering, conspiracy, material misrepresentation.

5. I understand that "convicted" or "conviction" as defined in Paragraph 287.133(1)(b), Florida Statutes, means a finding of guilt or a conviction of a public entity crime, with or without an adjudication guilt, in any federal or state trial court of record relating to charges brought by indictment information after July 1, 1989, as a result of a jury verdict, nonjury trial, or entry of a plea of guilty or nolo contendere.

PUBLIC ENTITY CRIMES (continued)

6. I understand that an "affiliate" as defined in Paragraph 287.133(1)(a), Florida Statutes, means

    a. A predecessor or successor of a person convicted of a public entity crime; or

    b. An entity under the control of any natural person who is active in the management of the entity and who has been convicted of a public entity crime. The term "affiliate" includes those officers, directors, executives, partners, shareholders, employees, members, and agents who are active in the management of an affiliate. The ownership by one person of shares constituting controlling interest in another person, or a pooling of equipment or income among persons when not for fair market value under an arm's length agreement, shall be a prima facie case that one person controls another person. A person who knowingly enters into a joint venture with a person who has been convicted of a public entity crime in Florida during the preceding 36 months shall be considered an affiliate.

7. I understand that a "person" as defined in Paragraph 287.133(1)(8), Florida Statutes, means any natural person or entity organized under the laws of any state or of the United States with the legal power to enter into a binding contract and which bids or applies to bid on contracts for the provision of goods or services let by a public entity, or which otherwise transacts or applies to transact business with public entity. The term "person" includes those officers, directors, executives, partners, shareholders, employees, members, and agents who are active in management of an entity.

8. Based on information and belief, the statement which I have marked below is true in relation to the entity submitting this sworn statement. (Please indicate which statement applies).

    ____Neither the entity submitting this sworn statement, nor any officers, directors, executives, partners, shareholders, employees, members, or agents who are active in management of the entity, nor any affiliate of the entity have been charged with and convicted of a public entity crime subsequent to July 1, 1989, AND (Please indicate which additional statement applies.)

    _____There has been a proceeding concerning the conviction before a hearing of the State of Florida, Division of Administrative Hearings. The final order entered by the hearing officer did not place the person or affiliate on the convicted vendor list. (Please attach a copy of the final order.)

    _____The person or affiliate was placed on the convicted vendor list. There has been a subsequent proceeding before a hearing officer of the State of Florida, Division of Administrative Hearings. The final order entered by the hearing officer determined that it was in the public interest to remove the person or affiliate from the convicted vendor list. (Please attach a copy of the final order.)

PUBLIC ENTITY CRIMES (continued)

_____The person or affiliate has not been put on the convicted vendor list. (Please describe any action taken by or pending with the Department of General Services.)

_____
(signature)

_____
(date)

STATE OF_____

COUNTY OF_____

PERSONALLY APPEARED BEFORE ME, the undersigned authority,

_____who, after first being sworn by me, affixed his/her
(name of individual signing)

signature in the space provided above on this_____day of _____ , 20___.

My commission expires:

_____
NOTARY PUBLIC

* * * * * *

INDEMNIFICATION

To the fullest extent permitted by law, the CONTRACTOR expressly agrees to indemnify and hold harmless the City of Key West, their officers, directors, agents, and employees (herein called the "indemnitees") from liabilities, damages, losses and costs, including, but not limited to, reasonable attorney's fees and court costs, such legal expenses to include costs incurred in establishing the indemnification and other rights agreed to in this Paragraph, to persons or property, to the extent caused by the negligence, recklessness, or intentional wrongful misconduct of the CONTRACTOR, its Subcontractors or persons employed or utilized by them in the performance of the Contract. Claims by indemnitees for indemnification shall be limited to the amount of CONTRACTOR's insurance or $1 million per occurrence, whichever is greater. The parties acknowledge that the amount of the indemnity required hereunder bears a reasonable commercial relationship to the Contract and it is part of the project specifications or the bid documents, if any.

The indemnification obligations under the Contract shall not be restricted in any way by any limitation on the amount or type of damages, compensation, or benefits payable by or for the CONTRACTOR under workers' compensation acts, disability benefits acts, or other employee benefits acts, and shall extend to and include any actions brought by or in the name of any employee of the CONTRACTOR or of any third party to whom CONTRACTOR may subcontract a part or all of the Work. This indemnification shall continue beyond the date of completion of the work.

CONTRACTOR: _____ SEAL:

_____
Address

_____
Signature

_____
Print Name

_____
Title

_____
Date

* * * * * *

LOCAL VENDOR CERTIFICATION PURSUANT TO
CKW ORDINANCE 09-22 SECTION 2-798

The undersigned, as a duly authorized representative of the vendor listed herein, certifies to the best of his/her knowledge and belief, that the vendor meets the definition of a "Local Business." For purposes of this section, "local business" shall mean a business which:

a. Principle address as registered with the FL Department of State located within 30 miles of the boundaries of the city, listed with the chief licensing official as having a business tax receipt with its principle address within 30 miles of the boundaries of the city for at least one year immediately prior to the issuance of the solicitation.

b. Maintains a workforce of at least 50 percent of its employees from the city or within 30 miles of its boundaries.

c. Having paid all current license taxes and any other fees due the city at least 24 hours prior to the publication of the call for bids or request for proposals.

[ ] Not a local vendor pursuant to Ordinance 09-22 Section 2-798
[ ] Qualifies as a local vendor pursuant to Ordinance 09-22 Section 2-798

If you qualify, please complete the following in support of the self-certification & submit copies of your County and City business licenses. Failure to provide the information requested will result in denial of certification as a local business.

Business Name _____ Phone:

Current Local Address: _____ Fax:_____
(P.O Box numbers may not be used to establish status)

Length of time at this address:_____

_____Date: _____
Signature of Authorized Representative

STATE OF_____ COUNTY OF_____

The foregoing instrument was acknowledged before me this _____day of_____, 20___.

By_____ , of _____
(Name of officer or agent, title of officer or agent) (Name of corporation acknowledging)

or has produced identification_____as identification
(Type of identification)

_____
Signature of Notary

_____
Print, Type or Stamp Name of Notary

_____
Title or Rank

Return Completed form with
Supporting documents to:
City of Key West
Purchasing

* * * * * *

EQUAL BENEFITS FOR DOMESTIC PARTNERS AFFIDAVIT

STATE OF _____)
: SS
COUNTY OF _____)

I, the undersigned hereby duly sworn, depose and say that the firm of _____ provides benefits to domestic partners of its employees on the same basis as it provides benefits to employees' spouses per City of Key West Ordinance Sec. 2-799.

By: _____

Sworn and subscribed before me this

_____ day of _____, 20___.

_____
NOTARY PUBLIC, State of _____ at Large

My Commission Expires: _____

* * * * * *

CONE OF SILENCE AFFIDAVIT

STATE OF _____)
: SS
COUNTY OF _____)

I the undersigned hereby duly sworn depose and say that all owner(s), partners, officers, directors, employees and agents representing the firm of _____ have read and understand the limitations and procedures regarding communications concerning City of Key West issued competitive solicitations pursuant to City of Key West Ordinance Section 2-773 Cone of Silence (attached).

_____
(signature)

_____
(date)

Sworn and subscribed before me this

_____ Day of _____, 20___.

_____
NOTARY PUBLIC, State of _____ at Large

My Commission Expires: _____

* * * * * *

LOBBYING RESTRICTIONS

The undersigned certifies, to the best of his or her knowledge and belief, that:

1. No Federal appropriated funds have been paid or will be paid, by or on behalf of the undersigned, to any person for influencing or attempting to influence an officer or employee of an agency, a Member of Congress, an officer or employee of Congress, or an employee of a Member of Congress in connection with the awarding of any Federal contract, the making of any Federal grant, the making of any Federal loan, the enteringinto of any cooperative agreement, and the extension, continuation, renewal, amendment, or modification of any Federal contract, grant, loan, or cooperative agreement.

2. If any funds other than Federal appropriated funds have been paid or will be paid to any person for influencing or attempting to influence an officer or employee of any agency, a Member of Congress, an officer or employee of Congress, or an employee of a Member of Congress in connection with this Federal contract, grant, loan, or cooperative agreement, the undersigned shall complete and submit Standard Form-LLL, "Disclosure Form to Report Lobbying," in accordance with its instructions.

3. The undersigned shall require that the language of this certification be included in the award documents for all sub-awards at all tiers (including subcontracts, sub-grants, and contracts under grants, loans, and cooperative agreements) and that all subrecipients shall certify and disclose accordingly.

This certification is a material representation of fact upon which reliance was placed when this transaction was made or entered into. Submission of this certification is a prerequisite for making or entering into this transaction imposed by section 1352, title 31, U.S. Code. Any person who fails to file the required certification shall be subject to a civil penalty of not less than $10,000 and not more than
$100,000 for each such failure.

_____ Signature of Contractor's Authorized Official

_____ Name and Title of Contractor's Authorized Official

_____ Date

* * * * * *

NON-COLLUSION AFFIDAVIT

STATE OF FLORIDA)
: SS
COUNTY OF MONROE)

I, the undersigned hereby declares that the only persons or parties interested in this Bid are those named herein, that this Bid is, in all respects, fair and without fraud, that it is made without collusion with any official of the Owner, and that the Bid is made without any connection or collusion with any person submitting another Bid on this Contract.

By: _____

Sworn and subscribed before me this

_____ day of _____, 2018.

_____
NOTARY PUBLIC, State of Florida at Large

My Commission Expires: _____

* * * * * *

DEBARMENT, SUSPENSION, INELIGIBILITY AND VOLUNTARY EXCLUSION

The Contractor shall comply and facilitate compliance with U.S. DOT regulations, "Nonprocurement Suspension and Debarment," 2 C.F.R. part 1200, which adopts and supplements the U.S. Office of Management and Budget (U.S. OMB) "Guidelines to Agencies on Governmentwide Debarment and Suspension (Nonprocurement)," 2 C.F.R. part 180. These provisions apply to each contract at any tier of $25,000 or more, and to each contract at any tier for a federally required audit (irrespective of the contract amount), and to each contract at any tier that must be approved by an FTA official irrespective of the contract amount. As such, the Contractor shall verify that its principals, affiliates, and subcontractors are eligible to participate in this federally funded contract and are not presently declared by any Federal department or agency to be:

a) Debarred from participation in any federally assisted Award;
b) Suspended from participation in any federally assisted Award;
c) Proposed for debarment from participation in any federally assisted Award;
d) Declared ineligible to participate in any federally assisted Award;
e) Voluntarily excluded from participation in any federally assisted Award; or
f) Disqualified from participation in ay federally assisted Award.

By signing and submitting its bid, the bidder certifies as follows:

The certification in this clause is a material representation of fact relied upon by the AGENCY. If it is later determined by the AGENCY that the bidder or proposer knowingly rendered an erroneous certification, in addition to remedies available to the AGENCY, the Federal Government may pursue available remedies, including but not limited to suspension and/or debarment. The bidder or proposer agrees to comply with the requirements of 2 C.F.R. part 180, subpart C, as supplemented by 2 C.F.R. part 1200, while this offer is valid and throughout the period of any contract that may arise from this offer. The bidder or proposer further agrees to include a provision requiring such compliance in its lower tier covered transactions.

* * * * * *

BIDDER'S CHECKLIST

(Note: The purpose of this checklist is to serve as a reminder of major items to be addressed in submitting a bid and is not intended to be all inclusive. It does not alleviate the Bidder from the responsibility of becoming familiar with all aspects of the Contract Documents and proper completion and submission of his bid.)

1. All Contract Documents thoroughly read and understood. [ ]
2. All blank spaces in Bid Proposal filled in, using black ink. [ ]
3. Total and unit prices added correctly and attached Schedule of Values [ ]
4. Addenda acknowledged. [ ]
5. Subcontractors are named as indicated in the Bid. [ ]
6. Experience record included. [ ]
7. Bid signed by authorized officer. [ ]
8. Bid Bond completed and executed, including power-of-attorney dated the same date as Bid Bond. [ ]
9. Bidder familiar with federal, state, and local laws, ordinances, rules and regulations affecting performance of the work. [ ]
10. Bidder, if successful, able to obtain and/or demonstrate possession of required licenses and certificates within (10) ten calendar days after receiving a Notice of Award. [ ]
11. BID submitted shall contain Bid Form, Bid Security, Experience Record, Anti-Kickback Affidavit, Public Entity Crimes Forms, City of Key West Indemnification Form, Local Vendor Certification, Equal Benefits for Domestic Partners, Cone of Silence Form, Local Vendor Certification, Disclosure of Lobbying Activities Form, Non-Collusion Declaration and Compliance Form, Suspension and Debarment Certification. [ ]
12. Bid Documents submitted in sealed envelope and addressed and labeled in conformance with the instructions in the Invitation to Bid. [ ]
13. Bidder must provide satisfactory documentation of State Licenses. [ ]

* * * * * *

PART 2

CONTRACT FORMS

~ This page intentionally left blank. ~

CONTRACT

This Contract, made and entered into this _____ day of _____ 20___,

by and between the City of Key West, hereinafter called the "Owner", and_____

_____

hereinafter called the "Contractor";

WITNESSETH:

The Contractor, in consideration of the sum to be paid him by the Owner and of the covenants and agreements herein contained, hereby agrees at his own proper cost and expense to do all the work and furnish all the materials, tools, labor, and all appliances, machinery, and appurtenances for ITB No. 18-026 MALLORY WHARF REFURBISHMENT, Key West, Florida, to the extent of the Bid made by the Contractor, dated the _____ day of_____ 20___, all in full compliance with the Contract Documents referred to herein.

The BIDDING REQUIREMENTS, including the signed copy of the BID PROPOSAL, CONTRACT FORMS, PERFORMANCE & PAYMENT BONDS and PROJECT MANUAL are hereby referred to and by reference made a part of this Contract as fully and completely as if the same were fully set forth herein and are mutually cooperative therewith.

In consideration of the performance of the work as set forth in these Contract Documents, the Owner agrees to pay to the Contractor the amount bid in the Bid Proposal as adjusted in accordance with the Contract Documents, or as otherwise herein provided, and to make such payments in the manner and at the times provided in the Contract Documents.

The Contractor agrees to complete the work within 60 calendar days with ALL work complete and final invoice submitted to the CITY.

The Contractor agrees to accept as full payment hereunder the amounts computed as determined by the Contract Documents and based on the said BID.

The Contractor agrees to remedy all defects appearing in the work or developing in the materials furnished and the workmanship performed under this Contract during the warranty period after the date of final acceptance of the work by the Owner, and further agrees to indemnify and save the Owner harmless from any costs encountered in remedying such defects.

It is agreed that the Contract, based upon the BID, shall be fully complete within the stated number of consecutive calendar days from the date the Notice to Proceed is issued.

In the event the Contractor fails to complete the work within the time limit or extended time limit agreed upon, as more particularly set forth in the Contract Documents, liquidated damages for BASE BID shall be paid at a rate of **$900.00 per day**. Sundays and legal holidays shall be included in determining days in default.

This contract will automatically expire upon completion of the project. Contractors warranty obligations remain in effect.

IN WITNESS WHEREOF, we, the parties hereto, each herewith subscribe the same this

_____ day of _____, A.D., 20___.

CITY OF KEY WEST

By_____

Title_____

CONTRACTOR

By_____

Title_____

* * * * * *

FLORIDA PERFORMANCE BOND

BOND NO._____

AMOUNT: $_____

KNOW ALL MEN BY THESE PRESENTS, that in accordance with Florida Statutes Section

255.05 _____

with offices at _____
hereinafter called the CONTRACTOR (Principal), and

_____

with offices at_____
a corporation duly organized and existing under and by virtue of the laws of the State of Florida, hereinafter called the SURETY, and authorized to transact business within the State of Florida, as SURETY, are held and firmly bound unto the **CITY OF KEY WEST,** hereinafter called the CITY (Obligee), in the sum of:

_____DOLLARS ($_____),
lawful money of the United States of America, for the payment of which, well and truly be made to the CITY, the CONTRACTOR and the SURETY bind themselves and each of their heirs, executors, administrators, successors, and assigns, jointly and severally, firmly by these presents as follows:

THE CONDITION OF THE ABOVE OBLIGATION IS SUCH THAT:
WHEREAS, the CONTRACTOR has executed and entered into a certain Contract hereto attached, with the CITY, dated _____, 20___, to furnish at his own cost, charges, and expense all the necessary materials, equipment, and/or labor in strict and express accordance with said Contract and the Contract Documents as defined therein, all of which is made a part of said Contract by certain terms and conditions in said Contract more particularly mentioned, which Contract, consisting of the various Contract Documents is made a part of this Bond as fully and completely as if said Contract Documents were set forth herein;

NOW THEREFORE, the conditions of this obligation are such that if the above bounden CONTRACTOR:

1. Shall in all respects comply with the terms and conditions of said Contract and his obligation there under, including the Contract Documents (which include the scope of work and conditions as prepared by the CITY, invitation to bid, instructions to bidders, the CONTRACTOR'S bid as accepted by the above CITY, the bid and contract performance and payment bonds, and all addenda, if any, issued prior to the opening of bids), being made a part of this bond by reference, at the times and in the manner prescribed in the contract; and

2. Promptly makes payments to all claimants, as defined in Section 255.05(1), Florida Statutes, supplying PRINCIPAL with labor, materials, or supplies, used directly or indirectly by PRINCIPAL in the prosecution of the work provided for in the contract; and

3. Pays CITY all losses, costs, expenses, damages, attorney's fees, including appellate proceedings, injury or loss of whatever kind and however arising including, without limitation, delay damages to which said CITY may be subject by reason of any wrongdoing, misconduct, want of care or skill, negligence, failure of performance, breach, failure to petition within the prescribed time, or default, including patent infringements, on the part of said CONTRACTOR, his agents or employees, in the execution or performance of said Contract; and

4. Performs the guarantee of all work and materials furnished under the contract for the time specified in the contract, then this obligation shall be void; otherwise, to remain in full force and effect for the term of said Contract.

AND, the said Surety for value received, hereby stipulates and agrees that no change involving any extension of time, or addition to the terms of the Contract Documents, or to the work to be performed, or materials to be furnished there under shall affect said obligation of said Surety on this Bond, and the said Surety does hereby waive notice of any such changes, extension of time, alterations, or additions of the terms of the Contract Documents, or to the work.

Any action instituted by a claimant under this bond for payment must be in accordance with the notice and time limitation provisions in Section 255.05(2), Florida Statutes.

IN WITNESS WHEREOF, the above parties bonded together have executed this instrument

this _____ day of _____, 20___, the name and corporate seal of each corporate party being hereto affixed and those presents duly signed by its undersigned representative, pursuant to authority of its governing body.

CONTRACTOR

By: _____

(SEAL)

ATTEST

SURETY

By: _____

(SEAL)

ATTEST

FLORIDA PAYMENT BOND

BOND NO._____

AMOUNT: $_____

KNOW ALL MEN BY THESE PRESENTS, that in accordance with Florida Statutes Section

255.05,_____

with offices at_____
hereinafter called the CONTRACTOR, (Principal), and

_____

with offices at _____

a corporation duly organized and existing under and by virtue of the laws of the State of _____

_____ , hereinafter called the SURETY, and authorized to transact business within the State of Florida, as SURETY, are held and firmly bound unto CITY OF KEY WEST**,** hereinafter called the City (Obligee), in the sum of:

_____DOLLARS (_____), lawful money of the United States of America, for the payment of which, well and truly be made to the CITY, and the CONTRACTOR and the SURETY bind themselves and each of their heirs, executors, administrators, successors, and assigns, jointly and severally, firmly by these presents as follows:

THE CONDITION OF THE ABOVE OBLIGATION IS SUCH THAT:

WHEREAS, the CONTRACTOR has executed and entered into a certain Contract for ITB No. 18-026 MALLORY WHARF REFURBISHMENT attached hereto, with the CITY, dated

_____, 20___, to furnish at his own cost, charges, and expense the necessary materials, equipment, and/or labor in strict and express accordance with said Contract and the plans, drawings (if any), and specifications prepared by the CITY, all of which is made a part of said Contract by certain terms and conditions in said Contract more particularly mentioned, which Contract, consisting of the various Contract Documents specifically mentioned herein and relative hereto, is made a part of this Bond as fully and completely as if said Contract Documents were set forth herein.

NOW THEREFORE, the conditions of this obligation are such that if the above bounden CONTRACTOR shall in all respects comply with the terms and conditions of said Contract and his obligation thereunder, including the Contract Documents, which include Scope of work and conditions prepared by the CITY, invitation to bid, instructions to bidders, the

CONTRACTOR'S bid as accepted by the CITY, the bid and contract and payment bonds, and all addenda, if any, issued prior to the opening of bids), and further that if said CONTRACTOR shall promptly make payments to all persons supplying materials, equipment, and/or labor, used directly or indirectly by said CONTRACTOR or subcontractors in the prosecution of the work for said contract is accordance with Florida Statutes, Section 255.05 or Section 713.23, then this obligation shall be void; otherwise to remain in full force and effect for the term of said contract, including and all guarantee periods as specifically mentioned in said Contract Documents.

AND, the said SURETY for value received, hereby stipulates and agrees that no change involving any extension of time, or addition to the terms of the Contract or to the work to be performed, or materials to be furnished thereunder, or in the Contract Documents and specifications accompanying the said contract shall affect said obligation of said SURETY on this Bond, and the said SURETY does hereby waive notice of any such changes, extension of time, alternations, or additions of the terms of the Contract, or to the work, to the Contract Documents, or to the specifications.

Claimant shall give written notice to the CONTRACTOR and the SURETY as required by Section 255.05 or Section 713.23, Florida Statutes. Any action instituted against the CONTRACTOR or SURETY under this bond for payment must be in accordance with the notice and time limitation provisions in Section 255.05(2) or Section 713.23, Florida Statutes.

IN WITNESS WHEREOF, the above parties bounded together have executed this instrument

this _____ day of _____, 20___, the name and corporate seal of each corporate party being hereto affixed and those presents duly signed by its undersigned representative, pursuant to authority of its governing body.

CONTRACTOR

By:_____

(SEAL)

ATTEST

SURETY

By:_____

(SEAL)

ATTEST

PART 3

CONDITIONS OF THE CONTRACT

~ This page intentionally left blank. ~

GENERAL CONDITIONS CONTENTS

ARTICLE

DEFINITIONS

1. AS APPROVED
2. AS SHOWN, AND AS INDICATED
3. BIDDER
4. CONTRACT DOCUMENTS
5. CONTRACTOR
6. CONTRACT COMPLETION
7. DAYS
8. DRAWINGS
9. ENGINEER
10. NOTICE
11. OR EQUAL
12. OWNER
13. PLANS
14. SPECIFICATIONS
15. NOTICE TO PROCEED
16. SUBSTANTIAL COMPLETION
17. WORK

CONTRACT DOCUMENTS

18. INTENT OF CONTRACT DOCUMENTS
19. DISCREPANCIES AND OMISSIONS
20. CHANGES IN THE WORK
21. EXAMINATION AND VERIFICATION OF CONTRACT DOCUMENTS
22. DOCUMENTS TO BE KEPT ON THE JOBSITE
23. ADDITIONAL CONTRACT DOCUMENTS
24. OWNERSHIP OF CONTRACT DOCUMENTS

THE ENGINEER

25. AUTHORITY OF THE ENGINEER
26. DUTIES AND RESPONSIBILITIES OF THE ENGINEER
27. LIMITATIONS ON ENGINEER'S RESPONSIBILITIES
28. REJECTED WORK
29. LINES AND GRADES
30. SUBMITTALS
31. DETAIL DRAWINGS AND INSTRUCTIONS

THE CONTRACTOR AND HIS EMPLOYEES

32. CONTRACTOR, AN INDEPENDENT AGENT
32. (a) ASSIGNMENT OF CONTRACT
33. SUBCONTRACTING
34. INSURANCE AND LIABILITY
    A. GENERAL
    B. CONTRACTOR AND SUB-CONTRACTOR INSURANCE
    C. COMPENSATION AND EMPLOYER'S LIABILITY INSURANCE
    D. GENERAL LIABILITY INSURANCE (INCLUDING AUTOMOBILE)
    E. BUILDER'S RISK ALL RISK INSURANCE
    F. NO PERSONAL LIABILITY OF PUBLIC OFFICIALS
35. INDEMNITY
36. EXCLUSION OF CONTRACTOR CLAIMS
37. TAXES AND CHARGES
38. REQUIREMENTS OF STATE LAW FOR PUBLIC WORKS PROJECTS
39. CODES, ORDINANCES, PERMITS, AND LICENSES
40. SUPERINTENDENCE
41. RECEPTION OF ENGINEER'S COMMUNICATIONS
42. SAFETY
43. PROTECTION OF WORK AND PROPERTY
44. RESPONSIBILITY OF CONTRACTOR TO ACT IN AN EMERGENCY
45. MATERIALS AND APPLIANCES
46. CONTRACTORS' AND MANUFACTURERS' COMPLIANCE WITH STATE SAFETY, OSHA AND OTHER CODE REQUIREMENTS
47. SUBSTITUTION OF MATERIALS
48. TESTS, SAMPLES, AND OBSERVATIONS
49. ROYALTIES AND PATENT
50. CONTRACTOR'S RIGHT TO TERMINATE CONTRACT
51. CORRECTION OF DEFECTIVE WORK DURING WARRANTY PERIOD

PROGRESS OF THE WORK

52. BEGINNING OF THE WORK
53. SCHEDULES AND PROGRESS REPORTS
54. PROSECUTION OF THE WORK
55. OWNER'S RIGHT TO RETAIN IMPERFECT WORK
56. OWNER'S RIGHT TO DO WORK
57. OWNER'S RIGHT TO TRANSFER EMPLOYMENT
58. DELAYS AND EXTENSION OF TIME
59. DIFFERING SITE CONDITION

GENERAL CONDITIONS CONTENTS (continued)

Article

60. LIQUIDATED DAMAGES
61. OTHER CONTRACTS
62. USE OF PREMISES
63. SUBSTANTIAL COMPLETION DATE
64. PERFORMANCE TESTING
65. OWNER'S USE OF PORTION OF THE WORK
66. CUTTING AND PATCHING
67. CLEANING UP

PAYMENT

68. CHANGE ORDERS
- A. UNIT PRICE
- B. LUMP SUM
- C. COST REIMBURSEMENT WORK

69. PARTIAL PAYMENTS
- A. GENERAL
- B. ESTIMATE
- C. DEDUCTION FROM ESTIMATE
- D. QUALIFICATIONS FOR PARTIAL PAYMENT FOR MATERIALS DELIVERED
- E. PAYMENT

70. CLAIMS FOR EXTRA WORK
71. RELEASE OF LIENS OR CLAIMS
72. FINAL PAYMENT
73. NO WAIVER OF RIGHTS
74. ACCEPTANCE OF FINAL PAYMENT CONSTITUTES RELEASE

****

DEFINITIONS

Whenever in the Contract Documents the following terms are used, the intent and meaning shall be interpreted as follows:

1. AS APPROVED

The words "as approved", unless otherwise qualified, shall be understood to be followed by the words "by the ENGINEER for conformance with the Contract Document".

2. AS SHOWN, AND AS INDICATED

The words "as shown" and "as Indicated" shall be understood to be followed by the words "on the Drawings".

3. BIDDER

The person or persons, partnership, firm, or corporation submitting a Proposal for the work contemplated.

4. CONTRACT DOCUMENTS

The "Contract Documents" consist of the Bidding Requirements, Contract Forms, Conditions of the Contact, Specifications, Drawings, all modifications thereof incorporated into the Documents before their execution, Change Orders, and all other requirements incorporated by specific reference thereto. These form the Contract.

5. CONTRACTOR

The person or persons, partnership, firm, or corporation who enters into the Contract awarded him by the OWNER.

6. CONTRACT COMPLETION

The "Contract Completion" is the date the OWNER accepts the entire work as being in compliance with the Contract Documents, or formally waives nonconforming work to extent of nonconformity, and issues the final payment in accordance with the requirements set forth in Article, "Final Payment" of these General Conditions.

7. DAYS

Unless otherwise specifically stated, the term "days" will be understood to mean calendar days. Business day or working day means any day other than Saturday, Sunday, or legal holiday.

8. DRAWINGS

The term "Drawings" refers to the official Drawings, Profiles, cross sections, elevations, details, and other working drawings and supplementary drawings, or reproductions thereof, signed by the ENGINEER, which shows the location, character, dimensions, and details of the work to be performed. Drawings may either be bound in the same book as the balance of the Contract Documents, or bound in separate sets, and are a part of the Contract Documents, regardless of the method of binding.

9. ENGINEER

The person or organization identified as such in the Contract Documents. The Term "ENGINEER" means ENGINEER or his authorized representative.

10. NOTICE

The term "notice" or the requirement to notify, as used in the Contract Documents or applicable state or federal statutes, shall signify a written communication delivered in person or by registered mail to the individual, or to a member of the firm, or to an officer of the corporation for whom it is intended. Certified or registered mail shall be addressed to the last business address known to him who gives the notice.

11. OR EQUAL

The term "or equal" shall be understood to indicate that the "equal" Product is equivalent to or better than the Product named in function, performance, reliability, quality, and general configuration. Determination of equality in reference to the Project design requirements will be made by the ENGINEER. Such equal Products shall not be purchased or installed by the CONTRACTOR without written authorization.

12. OWNER

The person, organization, or public body identified as such in the Contract Documents.

13. PLANS (See Drawings)

14. SPECIFICATIONS

The term "Specifications" refers to those portions of the Contract Documents consisting of written technical descriptions of materials, equipment, construction systems, standards, and workmanship as applied to the work and certain administrative details applicable thereto. Where standard specifications, such as those of ASTM, AASHTO, etc., have been referred to, the applicable portions of such standard specifications shall become a part of these Contract Documents. If referenced specifications conflict with specifications contained herein, the requirements contained herein shall prevail.

15. NOTICE TO PROCEED

A written notice given by the OWNER to the CONTRACTOR (with a copy to the ENGINEER) fixing the date on which the Contract time will commence to run and on which the CONTRACTOR shall start to perform his obligation under the Contract Documents. The Notice to Proceed will be given within 30 days following the execution of the Contract by the OWNER.

16. SUBSTANTIAL COMPLETION

"Substantial Completion" shall be that degree of completion of the Project or a defined portion of the Project, as evidenced by the ENGINEER's written notice of Substantial Completion, sufficient to Provide the OWNER, at his discretion, the full-time use of the Project or defined portion of the Project for the purposes for which it was intended. "Substantial Completion" of an operating facility shall be that degree of completion that has Provided a minimum of 7 continuous days of successful, trouble-free, operation, which period shall begin after all performance and acceptance testing has been successfully demonstrated to the ENGINEER. All equipment contained in the work, plus all other components necessary to enable the OWNER to operate the facility in a manner that was intended, shall be complete on the substantial completion date.

17. WORK

The word "work" within these Contract Documents shall include all material, labor, tools, and all appliances, machinery, transportation, and appurtenances necessary to perform and complete the Contract, and such additional items not specifically indicated or described which can be reasonably inferred as belonging to the item described or indicated and as required by good Practice to Provide a complete and satisfactory system or structure. As used herein, "Provide" shall be understood to mean "furnish and install, complete in-place ".

CONTRACT DOCUMENTS

18. INTENT OF CONTRACT DOCUMENTS

The Contract Documents are complementary, and what is called for by one shall be as binding as if called for by all. The intent of the Documents is to describe a functionally complete Project (or part thereof) to be constructed in accordance with the Contract Documents. Any work, materials, or equipment that may reasonably be inferred from the Contract Documents as being required to produce the intended result shall be supplied whether or not specifically called for. When words which have a well-known technical or trade meaning are used to describe work, materials, or equipment, such words shall be interpreted in accordance with that meaning.

Reference to standard specifications, manuals, or codes of any technical society, organization or association, or to the laws or regulations of any governmental authority, whether such reference be specific or by implication, shall mean the latest standard specification, manual, code or laws or regulations in effect on the first published date of the Invitation to Bid, except as may be otherwise specifically stated. However, no Provision of any referenced standard specification, manual or code (whether or not specifically incorporated by reference in the Contract Documents) shall be effective to change the duties and responsibilities of OWNER, CONTRACTOR, or ENGINEER, or any of their consultants, agents, or employees from those set forth in the Contract Documents, nor shall it be effective to assign to ENGINEER, or any ENGINEER's consultants, agents, or employees, any duty or authority to supervise or direct the furnishing or performance of the work or any duty or authority to undertake responsibility contrary to the Provisions of Article LIMITATIONS ON ENGINEER'S RESPONSIBILITIES.

19. DISCREPANCIES AND OMISSIONS

Any discrepancies or omissions found in the Contract Documents shall be reported to the ENGINEER immediately. The ENGINEER will clarify discrepancies or omissions, in writing, within a reasonable time.

In resolving inconsistencies among two or more sections of the Contract Documents, Precedence shall be given in the following order:

A. CONTRACT
B. PROPOSAL
C. SUPPLEMENTARY CONDITIONS
D. INVITATION TO BID
E. INSTRUCTIONS TO BIDDERS
F. GENERAL CONDITIONS
G. SPECIFICATIONS
H. DRAWINGS

Addenda shall take Precedence over all sections referenced therein. Figure dimensions on Drawings shall take precedence over scale dimensions. Detailed Drawings shall take precedence over general Drawings.

20. CHANGES IN THE WORK

The OWNER, without notice to the Sureties and without invalidating the Contract, may order changes in the work within the general scope of the Contract by altering, adding to, or deducting from the work, the Contract being adjusted accordingly. All such work shall be executed under the conditions of the original Contract, except as specifically adjusted at the time of ordering such change.

In giving instructions, the ENGINEER may order minor changes in the work not involving extra cost and not inconsistent with the purposes of the Project, but otherwise, except in an emergency endangering life and Property, additions or deductions from the work shall be performed only in pursuance of an approved Change Order from the OWNER, countersigned by the ENGINEER.

If the work is reduced by alterations, such action shall not constitute a claim for damages based on loss of anticipated Profits.

21. EXAMINATION AND VERIFICATION OF CONTRACT DOCUMENTS

The CONTRACTOR shall thoroughly examine and become familiar with all of the various parts of these Contract Documents and determine the nature and location of the work, the general and local conditions, and all other matters, which can in any way affect the work under this Contract. Failure to make an examination necessary for this determination shall not release the CONTRACTOR from the obligations of this Contract. No verbal agreement or conversation with any officer, agent, or employee of the OWNER or with the ENGINEER either before or after the execution of this Contract shall affect or modify any of the terms or obligations herein contained.

22. DOCUMENTS TO BE KEPT ON THE JOBSITE

The CONTRACTOR shall keep one copy of the Contract Documents on the job- site, in good order, available to the ENGINEER and to his representatives.

The CONTRACTOR shall maintain on a daily basis at the jobsite, and make available to the ENGINEER on request, one current record set of the Drawings which have been accurately marked to indicate all modifications in the completed work that differ from the design information shown on the Drawings. Upon Substantial completion of the work, the CONTRACTOR shall give the ENGINEER one complete set of these marked up record Drawings.

23. ADDITIONALCONTRACT DOCUMENTS

Copies of Contract Documents or Drawings may be obtained on request from the ENGINEER and by paying the actual cost of reproducing the Contract Documents or Drawings.

24. OWNERSHIP OF CONTRACT DOCUMENTS

All portions of the Contract Documents, and copies thereof furnished by the ENGINEER are instruments of service for this Project. They are not to be used on other work and are to be returned to the ENGINEER on request at the completion of the work. Any reuse of these materials without specific written verification or adaptation by the ENGINEER will be at the risk of the user and without liability or legal expense to the ENGINEER. Such user shall hold the ENGINEER harmless from any and all damages, including reasonable attorneys' fees, from any and all claims arising from any such reuse. Any such verification and adaptation shall entitle the ENGINEER to further compensation at rates to be agreed upon by the user and the ENGINEER.

<u>THE ENGINEER</u>

25. AUTHORITY OF THE ENGINEER

The ENGINEER will be the OWNER's representative during the construction period. His authority and responsibility will be limited to the Provisions set forth in these Contract Documents. The ENGINEER will have the Authority to reject work that does not conform to the Contract Documents. However, neither the ENGINEER's authority to act under this Provision, nor any decision made by him in good faith either to exercise or not to exercise such authority, shall give rise to any duty or responsibility of the ENGINEER to the CONTRACTOR, any SUBCONTRACTOR, their respective Sureties, any of their agents or employees, or any other person performing any of the work.

26. DUTIES AND RESPONSIBILITIES OF THE ENGINEER

The ENGINEER will make visits to the site at intervals appropriate to the various stages of construction to observe the Progress and quality of the work and to determine, in general, if the work is proceeding in accordance with the intent of the Contract Documents. He will not make comprehensive or continuous review or observation to check quality or quantity of the work, and he will not be responsible for construction means, methods, techniques, sequences, or Procedures, or for safety Precautions and Programs in connection with the work. Visits and observations made by the ENGINEER shall not relieve the CONTRACTOR of his obligation to conduct comprehensive inspections of the work and to furnish materials

and perform acceptable work, and to provide adequate safety Precautions, in conformance with the intent of the Contract.

The ENGINEER will make recommendations to the OWNER, in writing, on all claims of the OWNER or the CONTRACTOR arising from interpretation or execution of the Contract Documents. Such recommendations will be of factual and/or technical nature, and will not include the legal interpretation of the Contract Documents. Any necessary legal interpretation of the Contract Document will be made by the OWNER. Such recommendation shall be necessary before the CONTRACTOR can receive additional money under the terms of the Contract. Changes in work ordered by the ENGINEER shall be made in compliance with Article CHANGES IN THE WORK.

One or more Project representatives may be assigned to observe the work. It is understood that such Project representatives shall have the authority to issue notice of nonconformance and make decisions within the limitations of the authority of the ENGINEER. The CONTRACTOR shall furnish all reasonable assistance required by the ENGINEER or Project representatives for Proper observation of the work. The above-mentioned Project representatives shall not relieve the CONTRACTOR of his obligations to conduct comprehensive inspections of the work and to furnish materials and perform acceptable work, and to provide adequate safety Precautions, in conformance with the intent of the Contract.

27. LIMITATIONS ON ENGINEER'S RESPONSIBILITIES

ENGINEER will not be responsible for CONTRACTOR's means, methods, techniques, sequences, or Procedures of construction, or the safety Precautions and Programs incident thereto, and ENGINEER will not be responsible for CONTRACTOR's failure to perform or furnish the work in accordance with the Contract Documents.

ENGINEER will not be responsible for the acts or omissions of CONTRACTOR or of any SUBCONTRACTOR, any supplier, or of any other person or organization performing or furnishing any of the work.

Whenever in the Contract Documents the terms "as ordered", "as directed", "as required", "as allowed", "as approved", or terms of like effect or import are used, or the adjectives "reasonable", "suitable", "acceptable", "Proper", or "satisfactory", or adjectives of like effect or import are used to describe a requirement, direction, review or judgment of ENGINEER as to the work, it is intended that such requirement, direction, review or judgment will be solely to evaluate the work for compliance with the Contract Documents (unless there is a specific statement indicating otherwise). The use of any such term or adjective shall not be effective to assign to ENGINEER any duty or authority to supervise or direct the furnishing or performance of the work or any duty or authority to undertake responsibility contrary to the Provisions of this Article.

28. REJECTED WORK

Any defective work or nonconforming materials or equipment that may be discovered at any time prior to expiration of the warranty period shall be removed and replaced by work which shall conform to the Provisions of the Contract Documents. Any material condemned or rejected shall be removed at once from the Project site.

Failure on the part of the ENGINEER to condemn or reject bad or inferior work or to note nonconforming materials or equipment on CONTRACTOR submittals shall not be construed to imply acceptance of such work. The OWNER shall reserve and retain all of its rights and remedies at law against the CONTRACTOR and its Surety for correction of any and all latent defects discovered after the guarantee period.

29. LINES AND GRADES

Lines and grades shall be established as provided in the supplementary conditions. All stakes, marks, and other reference information shall be carefully preserved by the CONTRACTOR, and in case of their careless or unnecessary destruction or removal by him or his employees, such stakes, marks, and other information shall be replaced at the CONTRACTOR's expense.

30. SUBMITTALS

After checking and verifying all field measurements and after complying with applicable Procedures specified in Division I, GENERAL REQUIREMENTS, CONTRACTOR shall submit to ENGINEER, in accordance with the schedule for submittals for review, shop drawings, electrical diagrams, and catalog cuts for fabricated items and manufactured items (including mechanical and electrical equipment), which shall bear a stamp or specific written indication that CONTRACTOR has satisfied CONTRACTOR's responsibilities under the Contract Documents with respect to the review of the submittal. All submittals shall be identified as ENGINEER may require. The data shown shall be complete with respect to quantities, dimensions specified, performance and design criteria, materials, and similar data to enable ENGINEER to review the information. CONTRACTOR shall also submit to ENGINEER for review, with such Promptness as to cause no delay in work, all samples required by the Contract Documents. All samples shall have been checked by and accompanied by a specific written indication that CONTRACTOR has satisfied CONTRACTOR's responsibilities under the Contract Documents with respect to the review of the submission and shall be identified clearly as to material, supplier, pertinent data such as catalog numbers and the use for which intended.

Before submission of each submittal, CONTRACTOR shall have determined and verified all quantities, dimensions, specified performance criteria, installation requirements, materials, catalog numbers, and similar data with respect thereto and reviewed or coordinated each submittal with other submittals and with the requirements of the work and the Contract Documents.

At the time of each submission, CONTRACTOR shall give ENGINEER specific written notice of each variation that the submittal may have from the requirements of the Contract Documents, and, in addition, shall cause a specific notation to be made on each shop drawing submitted to ENGINEER for review and approval of each variation.

ENGINEER will review submittals with reasonable Promptness, but ENGINEER's review will be only for conformance with the design concept of the Project and for compliance with the information given in the Contract Documents and shall not extend to means, methods, techniques, sequences, or Procedures of construction (except where a specific means, method, technique, sequence, or Procedure of construction is indicated in or required by the Contract Documents) or to safety Precautions or Programs incident thereto. The review of a separate item as such will not indicate review of the assembly in which the item functions. CONTRACTOR shall make corrections required by ENGINEER, and shall return the required number of corrected copies of shop drawings and submit as required new samples for review. CONTRACTOR shall direct specific attention in writing to revisions other than the corrections called for by ENGINEER on Previous submittals.

ENGINEER's review of submittals shall not relieve CONTRACTOR from the responsibility for any variation from the requirements of the Contract Documents unless CONTRACTOR has in writing called ENGINEER's attention to each such variation at the time of submission and ENGINEER has given written approval of each such variation by a specific written notation thereof incorporated therein or accompanying the shop drawing or sample approval; nor will any approval by ENGINEER relieve CONTRACTOR from responsibility for errors or omissions in the shop drawings or from responsibility for having complied with the Provisions herein.
Where a shop drawing or sample is required by the specifications, any related work performed Prior to ENGINEER's review and approval of the pertinent submission shall be at the sole expense and responsibility of the CONTRACTOR.

31. DETAIL DRAWINGS AND INSTRUCTIONS

The ENGINEER will furnish, with reasonable Promptness, additional instructions by means of Drawings or otherwise, if, in the ENGINEER's opinion, such are required for the Proper execution of the work. All such Drawings and instructions will be consistent with the Contract Documents, true developments thereof, and reasonably inferable there from.

<u>THE CONTRACTOR AND HIS EMPLOYEES</u>

32. CONTRACTOR, AN INDEPENDENT AGENT

The CONTRACTOR shall independently perform all work under this Contract and shall not be considered as an agent of the OWNER or of the ENGINEER, nor shall the CONTRACTOR's SUBCONTRACTORS or employees be subagents of the OWNER or of the ENGINEER.

32. (a) ASSIGNMENT OF CONTRACT

Assignment of any part or the whole of this Contract shall be subject to review and approval of the City Commission.

33. SUBCONTRACTING

Unless modified in the Supplementary Conditions, within 10 days after the execution of the Contract, the CONTRACTOR shall submit to the ENGINEER the names of all SUBCONTRACTORS Proposed for the work, including the names of any SUBCONTRACTORS that were submitted with the Proposal. The CONTRACTOR shall not employ any SUBCONTRACTORS to which the OWNER may object to as lacking capability to properly perform work of the type and scope anticipated.

The CONTRACTOR is as fully responsible to the OWNER for the acts and omissions of his SUBCONTRACTORS and of persons either directly or indirectly employed by them as he is for the acts and omissions of persons directly employed by him.

Nothing contained in the Contract Documents shall create any contractual relationship between any SUBCONTRACTOR and the OWNER or ENGINEER.

34. INSURANCE AND LIABILITY

A. GENERAL

The CONTRACTOR shall provide (from insurance companies acceptable to the OWNER) the insurance coverage designated hereinafter and pay all costs before commencing work under this Contract. The CONTRACTOR shall furnish the OWNER with certificates of insurance specified herein showing the type, amount class of operations covered, effective dates, and date of expiration of policies, and containing substantially the following statement:

"The insurance covered by this certificate shall not be canceled or materially altered, except after 30 days' written notice has been received by the OWNER."

In case of the breach of any Provision of this Article, the OWNER, at his option, may take out and maintain, at the expense of the CONTRACTOR, such insurance as the OWNER may deem Proper and may deduct the cost of such insurance from any monies which may be due or become due the CONTRACTOR under this Contract.

B. CONTRACTOR AND SUBCONTRACTOR INSURANCE

The CONTRACTOR shall not commence work under this Contract until he has obtained all the insurance required hereunder and such insurance has been reviewed by the OWNER, nor shall the CONTRACTOR allow any SUBCONTRACTOR to commence work on his subcontract until insurance specified below has been obtained. Review of the insurance by the OWNER shall not relieve or decrease the liability of the CONTRACTOR hereunder.

C. COMPENSATION AND EMPLOYER'S LIABILITY INSURANCE

The CONTRACTOR shall maintain during the life of this Contract the statutory amount of Workers' Compensation Insurance, in addition, Employer's Liability Insurance in an amount as specified in the Supplementary Conditions, for each occurrence, for all of his employees to be engaged in work on the Project under this Contract. In case any such work is subcontracted, the CONTRACTOR shall require the SUBCONTRACTOR to provide similar Workmen's Compensation and Employer's Liability Insurance for all of the SUBCONTRACTOR's employees to be engaged in such work.

D. GENERAL LIABILITY INSURANCE (INCLUDING AUTOMOBILE)

The CONTRACTOR shall maintain during the life of this Contract such general liability, completed operations and Products liability, and automobile liability insurance as will Provide coverage for claims for damages for personal injury, including accidental death, as well as for claims for Property damage, which may arise directly or indirectly from performance of the work under this Contract. The general liability policy shall include contractual liability assumed by the CONTRACTOR under Article **INDEMNITY.** Coverage for Property damage shall be on a "broad form" basis with no exclusions for "X, C & U". The amount of insurance to be provided shall be as specified in the Supplementary Conditions.

In the event any work under this Contract is performed by a SUBCONTRACTOR, the CONTRACTOR shall be responsible for any liability directly or indirectly arising out of the work performed by the SUBCONTRACTOR; to the extent such liability is not covered by the SUBCONTRACTOR's insurance.

The OWNER and ENGINEER, their officers, agents, and employees shall be named as Additional Insured's on the CONTRACTOR's and any SUBCONTRACTOR's general liability and automobile liability insurance policies for any claims arising out of work performed under this Contract.

E. BUILDERS RISK ALL RISK INSURANCE

Unless otherwise modified in the Supplementary Conditions, the CONTRACTOR shall secure and maintain during the life of this Contract, Builders Risk All Risk Insurance coverage in an amount equal to the full value of the facilities under construction. Such insurance shall include coverage for earthquake, landslide, flood, collapse, loss due to the results of faulty workmanship or design, and all other normally covered risks, and shall provide for losses to be paid to the CONTRACTOR, OWNER, and ENGINEER as their interests may appear.

The OWNER and ENGINEER, their officers, agents, and employees shall be named as additional insureds on the CONTRACTOR's and any SUBCONTRACTOR's Builders Risk All Risk insurance policies for any claims arising out of work performed under this Contract.

This insurance shall include a waiver of subrogation as to the ENGINEER, the OWNER, the CONTRACTOR, and their respective officers, agents, employees and SUBCONTRACTORS.

F. NO PERSONAL LIABILITY OF PUBLIC OFFICIALS

In carrying out any of the Provisions hereof in exercising any authority granted by the Contract, there will be no personal liability upon any public official.

35. INDEMNITY

To the maximum extent permitted by law, the CONTRACTOR shall indemnify and defend the OWNER and the ENGINEER, and their officers, employees, agents, and sub-consultants, from all claims and losses, including attorney's fees and litigation costs arising out of Property losses or health, safety, personal injury, or death claims by the CONTRACTOR, its SUBCONTRACTORS of any tier, and their employees, agents, or invitees regardless of the

fault, breach of Contract, or negligence of the OWNER or ENGINEER, excepting only such claims or losses that have been adjudicated to have been caused solely by the negligence of the OWNER or the ENGINEER and regardless of whether or not the CONTRACTOR is or can be named a party in a litigation.

36. EXCLUSION OF CONTRACTOR CLAIMS

In performing its obligations, the ENGINEER and its consultants may cause expense for the CONTRACTOR or its SUBCONTRACTORS and equipment or material suppliers. However, those parties and their sureties shall maintain no direct action against the ENGINEER, its officers, employees, agents, and consultants for any claim arising out of, in connection with, or resulting from the engineering services performed or required to be performed.

37. TAXES AND CHARGES

The CONTRACTOR shall withhold and pay any and all sales and use taxes and all withholding taxes, whether State or Federal, and pay all Social Security charges and also all State Unemployment Compensation charges, and pay or cause to be withheld, as the case may be, any and all taxes, charges, or fees or sums whatsoever, which are now or may hereafter be required to be paid or withheld under any laws.

38. REQUIREMENTS OF STATE LAW FOR PUBLIC WORKS PROJECTS

When the Contract Documents concern public works of the state or any county, municipality, or political subdivision created by its laws, the applicable statutes shall apply. All parties to this Contract shall determine the contents of all applicable statutes and comply with their Provisions throughout the performance of the Contract.

39. CODES, ORDINANCES, PERMITS AND LICENSES

The CONTRACTOR shall keep himself fully informed of all local codes and ordinances, as well as state and federal laws, which in any manner affect the work herein specified. The CONTRACTOR shall at all times comply with said codes and ordinances, laws, and regulations, and Protect and indemnify the OWNER, the ENGINEER and their respective employees, and its officers and agents against any claim or liability arising from or based on the violation of any such laws, ordinances, or regulations. All permits, licenses and inspection fees necessary for Prosecution and completion of the work shall be secured and paid for by the CONTRACTOR, unless otherwise specified.

40. SUPERINTENDENCE

The CONTRACTOR shall keep at the project site, competent supervisory personnel. The CONTRACTOR shall designate, in writing, before starting work, a Project superintendent who shall be an employee of the CONTRACTOR and shall have complete authority to represent and to act for the CONTRACTOR. ENGINEER shall be notified in writing prior to any change in superintendent assignment. The CONTRACTOR shall give efficient supervision to the work, using his best skill and attention. The CONTRACTOR shall be solely responsible for all construction means, methods, techniques, and Procedures, and for providing adequate safety Precautions and coordinating all portions of the work under the Contract. It is specifically understood and agreed that the ENGINEER, its employees and agents, shall not have control or charge of and shall not be responsible for the construction means, methods, techniques, procedures, or for providing adequate safety Precautions in connection with the work under Contract.

41. RECEPTION OF ENGINEER'S COMMUNICATIONS

The superintendent shall receive for the CONTRACTOR all communications from the ENGINEER. Communications of major importance will be confirmed in writing upon request from the CONTRACTOR.

The ENGINEER may schedule Project meetings for the purposes of discussing and resolving matters concerning the various elements of the work. Time and place for these meetings and the names of persons required to be Present shall be as determined by the ENGINEER. CONTRACTOR shall comply with these attendance requirements and shall also require his SUBCONTRACTORS to comply.

42. SAFETY

The CONTRACTOR shall be solely and completely responsible for conditions of the jobsite, including safety of all persons (including employees) and Property during performance of the work. This requirement shall apply continuously and not be limited to normal working hours. Safety Provisions shall conform to U.S. Department of Labor (OSHA), and all other applicable federal, state, county, and local laws, ordinances, codes, and regulations. Where any of these are in conflict, the more stringent requirement shall be followed. The CONTRACTOR's failure to thoroughly familiarize himself with the aforementioned safety Provisions shall not relieve him from compliance with the obligations and penalties set forth therein.

The CONTRACTOR shall develop and maintain for the duration of this Contract, a safety Program that will effectively incorporate and implement all required safety Provisions. The CONTRACTOR shall appoint an employee who is qualified and authorized to supervise and enforce compliance with the safety Program. The duty of the ENGINEER to conduct construction review of the work does not include review or approval of the adequacy of the CONTRACTOR's safety Program, safety supervisor, or any safety measures taken in, on, or near the construction site. The CONTRACTOR, as a part of his safety Program, shall maintain at his office or other well-known place at the jobsite, safety equipment applicable to the work as Prescribed by the aforementioned authorities, all articles necessary for giving first-aid to the injured, and shall

establish the Procedure for the immediate removal to a hospital or a doctor's care of persons (including employees) who may be injured on the jobsite.

If death or serious injuries or serious damages are caused, the accident shall be reported immediately by telephone or messenger to both the ENGINEER and the OWNER. In addition, the CONTRACTOR must promptly report in writing to the ENGINEER all accidents whatsoever arising out of, or in connection with, the performance of the work whether on, or adjacent to, the site, giving full details and statements of witnesses.

If a claim is made by anyone against the CONTRACTOR or any SUBCONTRACTOR on account of any accident, the CONTRACTOR shall promptly report the facts in writing to the ENGINEER, giving full details of the claim.

43. PROTECTION OF WORK AND PROPERTY

The CONTRACTOR shall at all times safely guard and Protect from damage the OWNER's Property, adjacent Property, and his own work from injury or loss in connection with this Contract. All facilities required for Protection by federal, state, or municipal laws and regulations and local conditions must be provided and maintained.

The CONTRACTOR shall Protect his work and materials from damage due to the nature of the work, the elements, carelessness of other CONTRACTORs, or from any cause whatever until the completion and acceptance of the work. All loss or damages arising out of the nature of the work to be done under these Contract Documents, or from any unforeseen obstruction or defects which may be encountered in the Prosecution of the work, or from the action of the elements, shall be sustained by the CONTRACTOR.

44. RESPONSIBILITY OF CONTRACTOR TO ACT IN AN EMERGENCY

In case of an emergency which threatens loss or injury of Property, and/or safety of life, the CONTRACTOR shall act, without previous instructions from the OWNER or ENGINEER, as the situation may warrant. The CONTRACTOR shall notify the ENGINEER thereof immediately thereafter. Any claim for compensation by the CONTRACTOR, together with substantiating documents in regard to expense, shall be submitted to the OWNER through the ENGINEER and the amount of compensation shall be determined by agreement.

45. MATERIALS AND APPLIANCES

Unless otherwise stipulated, the CONTRACTOR shall Provide and pay for all materials, labor, water, tools, equipment, heat, light, fuel, power, transportation, construction equipment and machinery, appliances, telephone, sanitary facilities, temporary facilities and other facilities and incidentals necessary for the execution and completion of the work.

Unless otherwise specified, all materials shall be new, and both workmanship and materials shall be of good quality. The CONTRACTOR shall, if required, furnish satisfactory evidence as to the kind and quality of materials.

In selecting and/or approving equipment for installation in the Project, the OWNER and ENGINEER assume no responsibility for injury or claims resulting from failure of the equipment to comply with applicable federal, state, and local safety codes or requirements, or the safety requirements of a recognized agency, or failure due to faulty design concepts, or defective workmanship and materials.

46. CONTRACTORS' AND MANUFACTURERS' COMPLIANCE WITH STATE SAFETY, OSHA, AND OTHER CODE REQUIREMENTS

The completed work shall include all necessary permanent safety devices, such as machinery guards and similar ordinary safety items required by the state and federal (OSHA) industrial authorities and applicable local and national codes. Further, any features of the work subject to such safety regulations shall be fabricated, furnished, and installed (including OWNER-furnished equipment) in compliance with these requirements. CONTRACTORs and manufacturers of equipment shall be held responsible for compliance with the requirements included herein. CONTRACTORs shall notify all equipment suppliers and SUBCONTRACTORS of the Provisions of this Article.

47. SUBSTITUTION OF MATERIALS

Except for OWNER-selected equipment items, and items where no substitution is clearly specified, whenever any material, article, device, Product, fixture, form, type of construction, or Process is indicated or specified by patent or Proprietary name, by name of manufacturer, or by catalog number, such specifications shall be deemed to be used for the purpose of establishing a standard of quality and facilitating the description of the material or Process desired. This Procedure is not to be construed as eliminating from competition other Products of equal or better quality by other manufacturers where fully suitable in design, and shall be deemed to be followed by the words "or equal". The CONTRACTOR may, in such cases, submit complete data to the ENGINEER for consideration of another material, type, or Process that shall be substantially equal in every respect to that so indicated or specified. Substitute materials shall not be used unless approved in writing. The ENGINEER will be the sole judge of the substituted article or material.

48. TESTS, SAMPLES, AND OBSERVATIONS

The CONTRACTOR shall furnish, without extra charge, the necessary test pieces and samples, including facilities and labor for obtaining the same, as requested by the ENGINEER. When required, the CONTRACTOR shall furnish certificates of tests of materials and equipment made at the point of manufacture by a recognized testing laboratory.

The OWNER, ENGINEER, and authorized government agents, and their representatives shall at all times be Provided safe access to the work wherever it is in Preparation or Progress, and the CONTRACTOR shall Provide facilities for such access and for observations, including maintenance of temporary and permanent access.

If the Specifications, laws, ordinances, or any public authority require any work, to be specially tested or approved, the CONTRACTOR shall give timely notice of its readiness for observations. If any work should be covered up without approval or consent of the ENGINEER, it shall, if required by the ENGINEER, be uncovered for examination at the CONTRACTOR's expense.
Reexamination of questioned work may be ordered by the ENGINEER, and, if so ordered, the work shall be uncovered by the CONTRACTOR. If such work is found to be in accordance with the Contract Documents, the OWNER will pay the cost of uncovering, exposure, observation, inspection, testing and reconstruction. If such work is found to be not in accordance with the Contract Documents, the CONTRACTOR shall correct the defective work, and the cost of reexamination and correction of the defective work shall be paid by the CONTRACTOR.

49. ROYALTIES AND PATENTS

The CONTRACTOR shall pay all royalty and licenses fees, unless otherwise specified. The CONTRACTOR shall defend all suits or claims for infringement of any patent rights and shall save the OWNER and the ENGINEER harmless from any and all loss, including reasonable attorneys' fees, on account thereof.

50. CONTRACTOR'S RIGHT TO TERMINATE CONTRACT

If the work should be stopped under an order of any court or other public authority for a period of more than 3 months, through no act or fault of the CONTRACTOR, its SUBCONTRACTORS, or respective employees or if the ENGINEER should fail to make recommendation for payment to the OWNER or return payment request to CONTRACTOR for revision within 30 days after it is due, or if the OWNER should fail to pay the CONTRACTOR within 30 days after time specified in Article PARTIAL PAYMENTS, any sum recommended by the ENGINEER, then the CONTRACTOR may, upon 15 days' written notice to the OWNER and the ENGINEER, stop work or terminate this Contract and recover from the OWNER payment for all acceptable work performed and reasonable termination expenses, unless said default has been remedied.

51. CORRECTION OF DEFECTIVE WORK DURING WARRANTY PERIOD

The CONTRACTOR hereby agrees to make, at his own expense, all repairs or replacements necessitated by defects in materials or workmanship, Provided under terms of this Contract, and pay for any damage to other works resulting from such defects, which become evident within 2 years after the date of final acceptance of the work or within 2 years after the date of substantial completion established by the ENGINEER for specified items of equipment, or within such longer period as may be Prescribed by law or by the terms of any applicable special guarantee required by the Contract Documents. Un-remedied defects identified for correction during the warranty period but remaining after its expiration shall be considered as part of the obligations of the warranty. Defects in material, workmanship, or equipment which are remedied as a result of obligations of the warranty shall subject the remedied portion of the work to an extended warranty period of 2 years after the defect has been remedied.

The CONTRACTOR further assumes responsibility for a similar guarantee for all work and materials provided by SUBCONTRACTORS or manufacturers of packaged equipment components. The effective date for the start of the guarantee or warranty period for equipment qualifying as substantially complete is defined in Article SUBSTANTIAL COMPLETION, AND Article SUBSTANTIAL COMPLETION DATE, in these General Conditions.

The CONTRACTOR also agrees to hold the OWNER and the ENGINEER harmless from liability of any kind arising from damage due to said defects. The CONTRACTOR shall make all repairs and replacements promptly upon receipt of written order for same from the OWNER. If the CONTRACTOR fails to make the repairs and replacements promptly, or in an emergency where delay would cause serious risk, or loss, or damage, the OWNER may have the defective work corrected or the rejected work removed and replaced, and the CONTRACTOR and his Surety shall be liable for the cost thereof.

PROGRESS OF THE WORK

52. BEGINNING OF THE WORK

Following execution of the Contract, the CONTRACTOR shall meet with the OWNER and ENGINEER relative to his arrangements for prosecuting the work.

53. SCHEDULES AND PROGRESS REPORTS

Prior to starting the construction, the CONTRACTOR shall Prepare and submit to the ENGINEER, a Progress schedule showing the dates on which each part or division of the work is expected to be started and finished, and a Preliminary schedule for submittals. The Progress schedule for submittals shall be brought up to date and submitted to the ENGINEER at the end of each month or at such other times the ENGINEER may request.

The CONTRACTOR shall forward to the ENGINEER, at the end of each month, an itemized report of the delivery status of major and critical items of purchased equipment and material, including shop drawings and the status of shop and field fabricated work. These Progress reports shall indicate the date of the purchase order, the current percentage of completion, estimated delivery, and cause of delay, if any.

If the completion of any part of the work or the delivery of materials is behind the submitted Progress schedule, the CONTRACTOR shall submit in writing a plan acceptable to the OWNER and ENGINEER for bringing the work up to schedule.

The OWNER shall have the right to withhold Progress payments for the work if the CONTRACTOR fails to update and submit the Progress schedule and reports as specified.

54. PROSECUTION OF THE WORK

It is expressly understood and agreed that the time of beginning, rate of Progress, and time of completion of the work are the essence of this Contract. The work shall be prosecuted at such time, and in or on such part or parts of the Project as may be required, to complete the Project as contemplated in the Contract Documents and the Progress schedule.

If the CONTRACTOR desires to carry on work at night or outside the regular hours, he shall give timely notice to the ENGINEER to allow satisfactory arrangements to be made for observing the work in Progress.

55. OWNER'S RIGHT TO RETAIN IMPERFECT WORK

If any part or portion of the work completed under this Contract shall Prove defective and not in accordance with the Drawings and Specifications, and if the imperfection in the same shall not be of sufficient magnitude or importance as to make the work dangerous or unsuitable, or if the removal of such work will create conditions which are dangerous or undesirable, the OWNER shall have the right and authority to retain such work but will make such deductions in the final payment therefore as may be just and reasonable.

56. OWNER'S RIGHT TO DO WORK

Should the CONTRACTOR neglect to Prosecute the work in conformance with the Contract Documents or neglect or refuse at his own cost to remove and replace work rejected by the ENGINEER, then the OWNER may notify the Surety of the condition, and after 10 days' written notice to the CONTRACTOR and the Surety, or without notice if an emergency or danger to the work or public exists, and without Prejudice to any other right which the OWNER may have under Contract, or otherwise, take over that portion of the work which has been improperly or non-timely executed, and make good the deficiencies and deduct the cost thereof from the payments then or thereafter due the CONTRACTOR.

57. OWNER'S RIGHT TO TRANSFER EMPLOYMENT

If the CONTRACTOR should abandon the work or if he should persistently or repeatedly refuse or should fail to make prompt payment to SUBCONTRACTORS for material or labor, or to persistently disregard laws, ordinances, or to prosecute the work in conformance with the Contract Documents, or otherwise be guilty of a substantial violation of any Provision of the Contract or any laws or ordinance, then the OWNER may, without Prejudice to any other right or remedy, and after giving the CONTRACTOR and Surety 10 days' written notice, transfer the employment for said work from the CONTRACTOR to the Surety. Upon receipt of such notice, such Surety shall enter upon the Premises and take possession of all materials, tools, and appliances thereon for the purpose of completing the work included under this contract and employ by Contract or otherwise, any qualified person or persons to finish the work and Provide the materials therefore, in accordance with the Contract Documents, without termination of the continuing full force and effect of this contract. In case of such transfer of employment to such Surety, the Surety shall be paid in its own name on estimates according to the terms hereof without any right of the CONTRACTOR to make any claim for the same or any part thereof.

If, after the furnishing of said written notice to the Surety, the CONTRACTOR and the Surety still fail to make reasonable Progress on the performance of the work, the OWNER may terminate the employment of the CONTRACTOR and take possession of the Premises and of all materials, tools, and appliances thereon and finish the work by whatever method he may deem expedient and charge the cost thereof to the CONTRACTOR and the Surety. In such case, the CONTRACTOR shall not be entitled to receive any further payment until the work is finished. If the expense of completing the Contract, including compensation for additional managerial and administrative services, shall exceed such unpaid balance, the CONTRACTOR and the Surety shall pay the difference to the OWNER.

58. DELAYS AND EXTENSION OF TIME

If the CONTRACTOR is delayed in the Progress of the work by any act or neglect of the OWNER or the ENGINEER, or by any separate CONTRACTOR employed by the OWNER, or by strikes, lockouts, fire, adverse weather conditions not reasonably anticipated, or acts of Nature, and if the CONTRACTOR, within 48 hours of the start of the occurrence, gives written notice to the OWNER of the cause of the potential delay and estimate of the possible time extension involved, and within 10 days after the cause of the delay has been remedied, the CONTRACTOR gives written notice to the OWNER of any actual time extension requested as a result of the aforementioned occurrence, then the Contract time may be extended by change order for such reasonable time as the ENGINEER determines. It is agreed that no claim shall be made or allowed for any damages, loss, or expense which may arise out of any delay caused by the above referenced acts or occurrences other than claims for the appropriate extension of time. No extension of time will be granted to the CONTRACTOR for delays occurring to parts of the work that have no measurable impact on the completion of the total work under this Contract. No extension of time will be considered for weather conditions reasonably anticipated for the area in which the work is being performed. Reasonably anticipated weather conditions will be based on official records of monthly Precipitation and other historical data. Adverse weather conditions, if determined to be of a severity that would impact Progress of the work, may be considered as cause for an extension of Contract completion time.

Delays in delivery of equipment or material purchased by the CONTRACTOR or his SUBCONTRACTORS, including OWNER-selected equipment shall not be considered as a just cause for delay, unless the OWNER determines that for good cause the delay is beyond the control of the CONTRACTOR. The CONTRACTOR shall be fully responsible for the timely ordering, scheduling, complete the work is the per-diem rate, as stipulated in the Proposal. The said amount is hereby agreed upon as a reasonable estimate of the costs, which may be accrued by the OWNER after the expiration of the time of completion. It is expressly under- stood and agreed that this amount is not to be considered in the nature of a penalty, but as liquidated damages which have accrued against the CONTRACTOR. The OWNER shall have the right to deduct such damages from any amount due, or that may become due the CONTRACTOR, or the amount of such damages shall be due and collectible from the CONTRACTOR or Surety.

59. DIFFERING SITE CONDITIONS

The CONTRACTOR shall promptly, and before the conditions are disturbed, give a written notice to the OWNER and ENGINEER of:

A. subsurface or latent physical conditions at the site which differ materially from those indicated in this contract,

B. unknown physical conditions at the site, of an unusual nature, which differ materially from those ordinarily encountered and generally recognized as inherent in work of the character provided for in the Contract.

The ENGINEER will investigate the site conditions promptly after receiving the notice. If the conditions do materially so differ and cause an increase or decrease in the CONTRACTOR's cost of, or the time required for, performing any part of the work under this Contract, whether or not changed as a result of the conditions, and equitable adjustment shall be made under this Article and the Contract modified in writing accordingly.

No request by the CONTRACTOR for an equitable adjustment to the Contract under this Article will be allowed, unless the CONTRACTOR has given the written notice required; Provided that the time prescribed above for giving written notice may be extended by the OWNER.

No request by the CONTRACTOR for an equitable adjustment to the Contract for differing site conditions will be allowed if made after final payment under this Contract.

60. LIQUIDATED DAMAGES

Should the CONTRACTOR fail to complete the work, or any part thereof, in the time agreed upon in the Contract or within such extra time as may have been allowed for delays by extensions granted as Provided in the Contract, the CONTRACTOR shall reimburse the OWNER for the additional expense and damage for each calendar day, Sundays and legal holidays included, that the Contract remains uncompleted after the Contract completion date. It is agreed that the amount of such additional expense and damage incurred by reason of failure to complete the work is the per-diem rate, as stipulated in the Proposal. The said amount is hereby agreed upon as a reasonable estimate of the costs which may be accrued by the OWNER after the expiration of the time of completion. It is expressly under- stood and agreed that this amount is not to be considered in the nature of a penalty, but as liquidated damages which have accrued against the CONTRACTOR. The OWNER shall have the right to deduct such damages from any amount due, or that may become due the CONTRACTOR, or the amount of such damages shall be due and collectible from the CONTRACTOR or Surety.

61. OTHER CONTRACTS

The OWNER reserves the right to let other Contracts in connection with the work. The CONTRACTOR shall afford other CONTRACTORs reasonable opportunity for the introduction and storage of their materials and the execution of

their work and shall properly connect and coordinate his work with theirs.

If any part of the work under this Contract depends for Proper execution or results upon the work of any other CONTRACTOR, utility service company or OWNER, the CONTRACTOR shall inspect and Promptly report to the ENGINEER in writing any patent or apparent defects to deficiencies in such work that render it unsuitable for such Proper execution and results. The CONTRACTOR's failure to so report shall constitute and acceptance of the work by others as being fit and Proper for integration with work under this Contract, except for latent or non-apparent defects and deficiencies in the work.

62. USE OF PREMISES

The CONTRACTOR shall confine his equipment, the storage of materials and the operation of his workers to limits shown on the Drawings or indicated by law, ordinances, permits, or directions of the ENGINEER, and shall not unreasonably encumber the Premises with his materials. The CONTRACTOR shall provide, at his own expense, the necessary rights-of-way and access to the work, which may be required outside the limits of the OWNER's Property and shall furnish the ENGINEER copies of permits and agreements for use of the Property outside that provided by the OWNER.

The CONTRACTOR shall not load nor permit any part of the structure to be loaded in any manner that will endanger the structure, nor shall CONTRACTOR subject any part of the work or adjacent Property to stresses or Pressures that will endanger it.

63. SUBSTANTIAL COMPLETION DATE

The ENGINEER may issue a written notice of substantial completion for the purpose of establishing the starting date for specific equipment guarantees, and to establish the date that the OWNER will assume the responsibility for the cost of operating such equipment. Said notice shall not be considered as final acceptance of any portion of the work or relieve the CONTRACTOR from completing the remaining work within the specified time and in full compliance with the Contract Documents. See SUBSTANTIAL COMPLETION under DEFINITIONS of these General Conditions.

64. PERFORMANCE TESTING

Operating equipment and systems shall be performance tested in the Presence of the ENGINEER to demonstrate compliance with the specified requirements. Performance testing shall be conducted under the specified design operating conditions or under such simulated operating conditions as recommended or approved by the ENGINEER. Schedule such testing with the ENGINEER at least one week in advance of the planned date for testing.

65. OWNER'S USE OF PORTIONS OF THE WORK

Following issuance of the written notice of Substantial Completion, the OWNER may initiate operation of the facility. Such use shall not be considered as final acceptance of any portion of the work, nor shall such use be considered as cause for an extension of the Contract completion time, unless authorized by a Change Order issued by the OWNER.

66. CUTTING AND PATCHING

The CONTRACTOR shall do all cutting, fitting, or patching of his work that may be required to make its several parts come together Properly and fit it to receive or be received by work of other CONTRACTORs shown upon or reasonably implied by the Drawings.

67. CLEANING UP

The CONTRACTOR shall, at all times, keep Property on which work is in Progress and the adjacent Property free from accumulations of waste material or rubbish caused by employees or by the work. Upon completion of the construction, the CONTRACTOR shall remove all temporary structures, rubbish, and waste materials resulting from his operations.

PAYMENT

68. PAYMENT FOR CHANGE ORDERS

The OWNER's request for quotations on alterations to the work shall not be considered authorization to proceed with the work expediting, delivery, and installation of all equipment and materials. Within a reasonable period after the CONTRACTOR submits to the OWNER a written request for an extension of time, the ENGINEER will Present his written opinion to the OWNER as to whether an extension of time is justified, and, if so, his recommendation as to the number of days for time extension. The OWNER will make the final decision on all requests for extension of time.

Prior to the issuance of a formal Change Order, nor shall such request justify any delay in existing work. Quotations for alterations to the work shall include substantiating documentation with an itemized breakdown of CONTRACTOR and SUBCONTRACTOR costs, including labor, material, rentals, approved services, overhead, and profit. OWNER may require detailed cost data in order to substantiate the reasonableness of the proposed costs.

Any compensation paid in conjunction with the terms of a Change Order shall comprise total compensation due the

CONTRACTOR for the work or alteration defined in the Change Order. By signing the Change Order, the CONTRACTOR acknowledges that the stipulated compensation includes payment for the work or alteration plus all payment for the interruption of schedules, extended overhead, delay, or any other impact claim or ripple effect, and by such signing specifically waives any reservation or claim for additional compensation in respect to the subject Change Order.

At the OWNER's option, payment or credit for any alterations covered by a Change Order shall be determined by one or a combination of the methods set forth in A, B, or C below, as applicable:

A. UNIT PRICES

Those unit Prices stipulated in the Proposal shall be utilized where they are applicable. In the event the Change Order results in a change in the original quantity that is materially and significantly different from the original bid quantity, a new unit Price shall be negotiated upon demand of either party. Unit Prices for new items included in the Change Order shall be negotiated and mutually agreed upon.

B. LUMP SUM

A total lump sum for the work negotiated and mutually acceptable to the CONTRACTOR and the OWNER. Lump sum quotations for modifications to the work shall include substantiating documentation with an itemized breakdown of CONTRACTOR and SUBCONTRACTOR costs, including labor, material, rentals, approved services, overhead, and Profit, all calculated as specified under "C" below.

C. COST REIMBURSEMENT WORK

The term "cost reimbursement" shall be understood to mean that payment for the work will be made on a time and expense basis, that is, on an accounting of the CONTRACTOR's forces, materials, equipment, and other items of cost as required and used to do the work.

If the method of payment cannot be agreed upon Prior to the beginning of the work, and the OWNER directs by written Change Order that the work be done on a cost reimbursement basis, then the CONTRACTOR shall furnish labor, and furnish and install equipment and materials necessary to complete the work in a satisfactory manner and within a reasonable period of time. For the work performed, payment will be made for the documented actual cost of the following:

1. Labor including foremen for those hours they are assigned and participating in the cost reimbursement work (actual payroll cost, including wages, fringe benefits as established by negotiated labor agreements, labor insurance, and labor taxes as established by law). No other fixed labor burdens will be considered, unless approved in writing by the OWNER.
2. Material delivered and used on the designated work, including sales tax, if paid by the CONTRACTOR or his SUBCONTRACTOR.
3. Rental or equivalent rental cost of equipment, including necessary transportation for items having a value in excess of $100. Rental or equivalent rental cost will be allowed for only those days or hours during which the equipment is in actual use. Rental and transportation allowances shall not exceed the current rental rates prevailing in the locality. The rentals allowed for equipment will, in all cases, be understood to cover all fuel, supplies, repairs, and renewals, and no further allowances will be made for those items, unless specific agreement to that effect is made.
4. Additional bond, as required and approved by the OWNER.
5. Additional insurance (other than labor insurance) as required and approved by the OWNER.

In addition to items 1 through 5 above, an added fixed fee for general overhead and Profit shall be negotiated and allowed for the CONTRACTOR (or approved SUBCONTRACTOR) actually executing the Cost Reimbursement work.

An additional fixed fee shall be negotiated and allowed the CONTRACTOR for the administrative handling of portions of the work that are executed by an approved SUBCONTRACTOR. No additional fixed fee will be allowed for the administrative handling of work executed by a SUBCONTRACTOR of a SUBCONTRACTOR, unless by written permission from the OWNER.

The added fixed fees shall be considered to be full compensation, covering the cost of general supervision, overhead, Profit, and any other general expense. The CONTRACTOR's records shall make clear distinction between the direct costs of work paid for on a cost reimbursement basis and the costs of other work. The CONTRACTOR shall furnish the ENGINEER report sheets in duplicate of each day's cost reimbursement work no later than the working day following the performance of said work. The daily report sheets shall itemize the materials used, and shall cover the direct cost of labor and the charges for equipment rental, whether furnished by the CONTRACTOR, SUBCONTRACTOR or other forces. The daily report sheets shall provide names or identifications and classifications of workers, the hourly rate of pay and hours worked, and also the size, type, and identification number of equipment and hours operated.

Material charges shall be substantiated by valid copies of vendors' invoices. Such invoices shall be submitted with the daily report sheets, or, if not available, they shall be submitted with subsequent daily report sheets. Said daily report sheets shall be signed by the CONTRACTOR or his authorized agent.

The OWNER reserves the right to furnish such materials and equipment as he deems expedient and the CONTRACTOR shall have no claim for profit or added fees on the cost of such materials and equipment. To receive partial payments and final payment for cost reimbursement work, the CONTRACTOR shall submit to the ENGINEER, detailed and complete documented verification of the CONTRACTOR's and any of his SUBCONTRACTORS' actual costs involved in the cost reimbursement work. Such costs shall be submitted within 30 days after said work has been performed.

69. PARTIAL PAYMENTS

A. GENERAL

Nothing in this Article shall be construed to affect the right, hereby reserved, to reject the whole or any part of the aforesaid work, should such work be later found not to comply with the Provisions of the Contract Documents. All estimated quantities of work for which partial payments have been made are subject to review and correction on the final estimate. Payment by the OWNER and acceptance by the CONTRACTOR of partial payments based on periodic estimates of quantities of work performed shall not, in any way, constitute acceptance of the estimated quantities used as a basis for computing the amounts of the partial payments.

B. ESTIMATE

At least 30 days before each Progress payment falls due, as specified in the Supplementary Conditions, the CONTRACTOR shall submit to the ENGINEER a detailed estimate of the amount earned during the Preceding month for the separate portions of the work, and request payment. As used in this Article, the words "amount earned" means the value, on the date of the estimate for partial payment, of the work completed in accordance with the Contract Documents, and the value of approved materials delivered to the Project site suitable stored and Protected Prior to incorporation into the work.

ENGINEER will, within 7 days after receipt of each request for payment, either indicate in writing a recommendation of payment and present the request to OWNER, or return the request to CONTRACTOR indicating in writing ENGINEER's reasons for refusing to recommend payment. In the latter case, CONTRACTOR may, within 7 days, make the necessary corrections and resubmit the request.

ENGINEER may refuse to recommend the whole or any part of any payment if, in his opinion, it would be incorrect to make such representations to OWNER. ENGINEER may also refuse to recommend any such payment, or, because of subsequently discovered evidence or the results of subsequent inspections or tests, nullify any such payment previously recommended to such an extent as may be necessary in ENGINEER's opinion to protect the OWNER from loss because:

1. The work is defective, or completed work has been damaged requiring correction or replacement;

2. Written claims have been made against OWNER or Liens have been filed in connection with the work;

3. The Contract Price has been reduced because of Change Orders;

4. OWNER has been required to correct defective work or complete the work in accordance with Article OWNER'S RIGHT TO DO WORK;

5. Of CONTRACTOR's unsatisfactory Prosecution of the work in accordance with the Contract Documents; or

6. CONTRACTOR's failure to make payment to SUBCONTRACTORS or for labor, materials, or equipment.

C. DEDUCTION FROM ESTIMATE

Unless modified in the Supplementary Conditions, deductions from the estimate will be as described below:

1. The OWNER will deduct from the estimate, and retain as part security, 10 percent of the amount earned for work satisfactorily completed. A deduction and retainage of 10 percent will be made on the estimated amount earned for approved items of material delivered to and properly stored at the jobsite but not incorporated into the work. When the work is 50 percent complete, the OWNER may reduce the retainage to 5 percent of the dollar value of all work satisfactorily completed to date provided the CONTRACTOR is making satisfactory progress and there is no specific cause for a greater retainage. The OWNER may reinstate the retainage up to 10 percent if the OWNER determines, at his discretion, that the CONTRACTOR is not making satisfactory progress or where there is other specific cause for such withholding.

D. QUALIFICATION FOR PARTIAL PAYMENT FOR MATERIALS DELIVERED

Unless modified in the Supplementary Conditions, qualification for partial payment for materials delivered but not yet incorporated into the work shall be as described below:

1. Materials, as used herein, shall be considered to be those items which are fabricated and manufactured material and equipment. No consideration shall be given to individual purchases of less than $200 for any

one item.

2. To receive partial payment for materials delivered to the site, but not incorporated in the work, it shall be necessary for the CONTRACTOR to include a list of such materials on the Partial Payment Request. At his sole discretion, the ENGINEER may approve items for which partial payment is to be made. Partial payment shall be based on the CONTRACTOR's actual cost for the materials as evidenced by invoices from the supplier. Proper storage and Protection shall be provided by the CONTRACTOR, and as approved by the ENGINEER. Final payment shall be made only for materials actually incorporated in the work and, upon acceptance of the work, all materials remaining for which advance payments had been made shall revert to the CONTRACTOR, unless otherwise agreed, and partial payments made for these items shall be deducted from the final payment for the work.

3. CONTRACTOR warrants and guarantees that title to all work, materials, and equipment covered by any Application for Payment, whether incorporated in the Project or not, will pass to OWNER at the time of payment free and clear of all liens, claims, security interests, and encumbrances.

4. If requested by the ENGINEER, the CONTRACTOR shall provide, with subsequent pay requests, invoices receipted by the supplier showing payment in full has been made.

E. PAYMENT

After deducting the retainage and the amount of all previous partial payments made to the CONTRACTOR from the amount earned, the amount due will be made payable to the CONTRACTOR. Recommendations for payment received by the OWNER less than 9 days Prior to the scheduled day for payment will not be Processed or paid until the following month.

70. CLAIMS FOR EXTRA WORK

In any case where the CONTRACTOR deems additional time or compensation will become due him under this Contract for circumstances other than those defined in Article DELAYS AND EXTENSION OF TIME, the CONTRACTOR shall notify the ENGINEER, in writing, of his intention to make claim for such time or compensation before he begins the work on which he bases the claim, in order that such matters may be settled, if possible, or other appropriate action taken. The notice of claim shall be in duplicate, in writing, and shall state the circumstances and the reasons for the claim, but need not state the amount. If such notification is not given or if the ENGINEER is not afforded proper facilities by the CONTRACTOR for keeping strict account of actual cost, then the CONTRACTOR hereby agrees to waive the claim for such additional time or compensation. Such notice by the CONTRACTOR, and fact that the ENGINEER has kept account of the cost as aforesaid, shall not in any way be construed as proving the validity of the claim.

No extension of time will be granted to the CONTRACTOR for delays resulting from extra work that have no measurable impact on the completion of the total work under this Contract. Claims for additional time or compensation shall be made in itemized detail and submitted, in writing, to the OWNER and ENGINEER within 10 days following completion of that portion of the work for which the CONTRACTOR bases his claim. Failure to make the claim for additional compensation in the manner and within the time specified above shall constitute waiver of that claim. In case the claim is found to be just, it shall be allowed and paid for as provided in Article PAYMENT FOR CHANGE ORDERS.

71. RELEASE OF LIENS OR CLAIMS

The CONTRACTOR shall indemnify and hold harmless the OWNER from all claims for labor and materials furnished under this Contract. Prior to the final payment, the CONTRACTOR shall furnish to the OWNER, as part of his final payment request, a certification that all of the CONTRACTOR's obligations on the project have been satisfied and that all monetary claims and indebtedness have been paid. The CONTRACTOR shall furnish complete and legal effective releases or waivers, satisfactory to the OWNER, of all liens arising out of or filed in connection with the work.

72. FINAL PAYMENT

Upon completion of all the work under this Contract, the CONTRACTOR shall notify the ENGINEER, in writing, that he has completed his part of the Contract and shall request final payment. Upon receipt of such notice the ENGINEER will inspect and, if acceptable, submit to the OWNER his recommendation as to acceptance of the completed work and as to the final estimate of the amount due the CONTRACTOR. Upon approval of this final estimate by the OWNER and compliance by the CONTRACTOR with Provisions in Article **RELEASE OF LIENS OR CLAIMS,** and other Provisions as may be applicable, the OWNER shall pay to the CONTRACTOR all monies due him under the Provisions of these Contract Documents.

73. NO WAIVER OF RIGHTS

Neither the inspection by the OWNER, through the ENGINEER or any of his employees, nor any order by the OWNER for payment of money, nor any payment for, or acceptance of, the whole or any part of the work by the OWNER or ENGINEER, nor any extension of time, nor any possession

taken by the OWNER or its employees, shall operate as a waiver of any Provision of this Contract, or any power herein reserved to the OWNER, or any right to damages herein Provided, nor shall any waiver of any breach in this Contract be held to be a waiver of any other or subsequent breach. Acceptance or final payment shall not be final and conclusive with regards to latent defects, fraud, or such gross mistakes as may amount to fraud, or as regards the OWNER's rights under the warranty.

74. ACCEPTANCE OF FINAL PAYMENT CONSTITUTES RELEASE

The acceptance by the CONTRACTOR of the final payment shall release the OWNER and the ENGINEER, as representatives of the OWNER, from all claims and all liability to the CONTRACTOR for all things done or furnished in connection with the work, and every act of the OWNER and others relating to or arising out of the work except claims Previously made in writing and still unsettled. No payment, however, final or otherwise, shall operate to release the CONTRACTOR or his Sureties from obligations under this Contract and the Performance Bond, Payment Bond, and other bonds and warranties, as herein provided.

******

SUPPLEMENTARY CONDITIONS

The General Conditions are hereby revised as follows:

ARTICLE 9 "ENGINEER"

Delete Article "ENGINEER" in its entirety and substitute the following:

The person or organization identified as such in the Contract Documents. The Term "ENGINEER" means ENGINEER, ARCHITECT or his authorized representative.

ARTICLE 34 "INSURANCE & LIABILITY"

Delete Article 34 "INSURANCE & LIABILITY" (A), (B), (C), and (D) in their entirety and substitute the following:

Contractor shall maintain limits no less than those stated below:

CONTRACTOR is to secure, pay for, and file with the City of Key West, prior to commencing any work under the Contract, Certificates of Insurance signed by an authorized representative of the insurer. In addition, the Proposer shall provide the City with updated Certificates of Insurance 20 days prior to the expiration of any and all required insurance. Notwithstanding any other provision of the Contract, the CONTRACTOR shall provide the minimum limits of liability insurance coverage as follows:

Business Auto Liability	$1,000,000	Combined Single Limit
Commercial General Liability	$2,000,000	Aggregate (Per Project)
	$2,000,000	Products Aggregate
	$1,000,000	Any One Occurrence
	$1,000,000	Personal Injury
	$ 300,000	Fire Damage/Legal
Workers' Compensation	Statutory	
Employers Liability	$1,000,000/$1,000,000/$1,000,000	

The City of Key West may require additional types and amounts of insurance at their sole discretion.

The use of an Umbrella/Excess Liability policy shall be acceptable as long as the terms and conditions of the Umbrella/Excess Liability policy are no less restrictive than the underlying Commercial General Liability and Business Automobile Liability policies.

All coverages and endorsements must be comparable to the latest forms filed by the Insurance Services Office (ISO).

Contractor shall furnish an original Certificate of Insurance indicating, and such policy providing coverage to, City of Key West named as an additional insured on all policies—excepting the

Workers Compensation/Employers Liability coverages —on a PRIMARY and NON-CONTRIBUTORY basis.

The Proposer's Commercial General Liability and Umbrella/Excess Liability (if applicable) policies shall provide the following provisions:

- Completed Operations
- Wiaver of Subrogation
- Seperation of Insureds
- The City of Key West named as an "Additional Insured"

If any of the policies are provided on a "Claims Made" basis, the required coverages must be maintained for a minimum of 4 years following the City's acceptance of the work.

If the work is being done on or near a navigable waterway, CONTRACTOR will be required to maintain insurance coverage that will respond to the United States Longshoremen and Harbor Workers (USL&H) Act (33 USC sections 901-950) with minimum limits of $1,000,000.

If the work requires the use of water craft, the Contractor shall be required to maintain Water Craft Liability coverage with minimum limits of $1,000,000. In addition, the Contractor shall be required to maintain coverage that will respond to the Federal Jones Act (46 U.S.C.A. subsection 688) with minimum limits of $1,000,000.

The Contractor shall provide the City of key West with notice of any changes to their insurance coverages that results in the required coverages being cancelled, non-renewed or a reduction of coverages.

Certificates of Insurance submitted to the City of Key West will not be accepted without copies of the endorsements being requested. PLEASE ADVISE YOUR INSURANCE AGENT ACCORDINGLY.

CONTRACTOR will comply with any and all safety regulations required by any agency or regulatory body including but not limited to OSHA.

ARTICLE 35 "INDEMNITY"

Delete Article 35 "INDEMNITY" in its entirety and substitute the following:

INDEMNITY

To the fullest extent permitted by law, the CONTRACTOR expressly agrees to indemnify and hold harmless the City of Key West, their officers, directors, agents, and employees (herein called the "indemnitees") from liabilities, damages, losses and costs, including, but not limited to, reasonable attorney's fees and court costs, such legal expenses to include costs incurred in establishing the indemnification and other rights agreed to in this Paragraph, to persons or

property, to the extent caused by the negligence, recklessness, or intentional wrongful misconduct of the CONTRACTOR, its Subcontractors or persons employed or utilized by them in the performance of the Contract. The parties acknowledge that the amount of the indemnity required hereunder bears a reasonable commercial relationship to the Contract and it is part of the project specifications or the bid documents, if any.

The indemnification obligations under the Contract shall not be restricted in any way by any limitation on the amount or type of damages, compensation, or benefits payable by or for the CONTRACTOR under workers' compensation acts, disability benefits acts, or other employee benefits acts, and shall extend to and include any actions brought by or in the name of any employee of the CONTRACTOR or of any third party to whom CONTRACTOR may subcontract a part or all of the Work. This indemnification shall continue beyond the date of completion of the work.

ARTICLE 39 "CODES, ORDINANCES, PERMITS, AND LICENSES"

Add the following:

A. PERMIT FOR WORK WITHIN LOCAL RIGHTS-OF-WAY

The Contractor shall obtain from the City of Key West the necessary permits for work within the rights-of-way. The Contractor shall abide by all regulations and conditions, including maintenance of traffic.

B. NOISE ORDINANCE

City of Key West has a noise ordinance that allows working hours between 8:00 AM to 7:00 PM, Monday through Friday and 9:00 AM to 5:00 PM on Saturday. No work shall be performed during Sunday or City Holidays, State Holidays and National Holidays. Construction operations outside these hours and these days will require approval of the Engineer and may require a variance from the City of Key West Commission.

D. "LICENSES"

THE BIDDER MUST BE A LICENSED CONTRACTOR BY THE STATE OF FLORIDA AND SUBMIT PROOF OF SUCH WITH THE BID.

1. Within 10 days of Notice of Award, the successful Bidder must represent that he holds all applicable, county, and City of Key West licenses and permits required to do business as a contractor with respect to the work described in the Contract Documents.

2. Further, the successful Bidder must, within 10 days of Notice of Award, furnish documentation showing that, as a minimum, he has complied with the provisions of Chapter 18 of the Code of Ordinances of the City of Key West in order to enter into the Agreement contained in the Contract Documents.

3. Specifically, within 10 days after Notice of Award, the successful Bidder must demonstrate that he holds, as a minimum, the following licenses and certificates:

   City of Key West Tax License Receipt

   E. WORK DURING SPECIAL EVENTS

   There shall be no work during the following periods without prior City approval:

   - The week of Goombay and Fantasy Fest
   - Christmas Eve through New Year's Day
   - Power Boat Races (November)
   - Independence Day
   - Labor Day weekend and holiday
   - Thanksgiving weekend (Thursday through Sunday)

ARTICLE 42 "SAFETY"

Add the following sub article:

OCCUPATIONAL SAFETY AND HEALTH

The Contractor shall observe and comply with all applicable local, state, and federal occupational safety and health regulations during the prosecution of work under this Contract. In addition, full compliance by the Contractor with the U.S. Department of Labor's Occupational Safety and Health Standards, as established in Public Law 91-596, will be required under the terms of this Contract.

ARTICLE 43 "PROTECTION OF WORK AND PROPERTY"

Add the following Article:

HISTORIC PRESERVATION

The Contractor shall comply with Florida's Archives and Historic Act (Florida Statutes, Chapter 267) and the regulations of the local historic preservation board as applicable and protect against the potential loss or destruction of significant historical or archaeological data, sites, and properties in connection with the project.

ARTICLE 57 "OWNERS RIGHT TO TRANSFER EMPLOYMENT"

Add the following Article:

TERMINATION FOR CONVENIENCE AND RIGHT OF SUSPENSION

A. Owner shall have the right to terminate this Contract without cause by written notice of Termination to the Contractor. In the event of such termination for convenience, the Contractor's recovery against the Owner shall be limited to that portion of the Contract amount earned through the date of termination, together with any retainage withheld and reasonable termination expenses incurred. Contractor shall not be entitled to any other or further recovery against the Owner, including, but not limited to, damages or any anticipated profit on portions of the Work not performed.

B. The Owner shall have the right to suspend all or any portions of the Work upon giving the Contractor prior written notice of such suspension. If all or any portion of the Work is so suspended, the Contractor shall be entitled to reasonable costs, expenses and time extension associated with the suspension.

ARTICLE 60 "LIQUIDATED DAMAGES"

Delete Article "LIQUIDATED DAMAGES" in its entirety and substitute the following:
LIQUIDATED DAMAGES

Should the Contractor fail to complete the work or any part thereof in the time agreed upon in the Contract Documents or within such extra time as may have been allowed for delays by extensions granted as provided in the Contract, the Contractor shall reimburse the Owner for the additional expense and damage for each calendar day, Sundays and legal holidays included, that project outlined in Contract Documents remains uncompleted after the completion date. Liquidated damages shall be assessed. It is agreed that the amount of such additional expense and damage incurred by reason of failure to complete the work is the per diem rate as stipulated in the Bid. The said amount is hereby agreed upon as a reasonable estimate of the costs which may be accrued by the Owner after the expiration of the time of completion. It is expressly understood and agreed that this amount is not to be considered in the nature of a penalty but as liquidated damages, which have accrued against the Contractor. The Owner shall have the right to deduct such damages from any amount due or that may become due the Contractor or the amount of such damages shall be due and collectible from the Contractor or Surety.

ARTICLE 68 "PAYMENT FOR CHANGE ORDERS"

Add the following paragraphs

If not initially included in the original construction agreement, Change Orders will be implemented subject to approval by the City Commission.

Payment for subcontractors, materials and equipment authorized by the Owner in a written Change Order but not listed in the above Bid will be provided at the supplier's invoice plus 10 %.

ARTICLE 69 "PARTIAL PAYMENTS"

Delete the first paragraph of Article "PARTIAL PAYMENTS" and substitute the following:

No more than once each month the Contractor shall submit to the Engineer a detailed estimate of the amount earned during the preceding month for the separate portions of the work and request payment. As used in this Article the words "amount earned" means the value, on the date of the estimate, for partial payment of the work completed in accordance with the Contract Documents and the value of approved materials delivered to the project site suitably stored and protected prior to incorporation into the work.
Separate Application and Certification for Payment forms will be submitted for each Notice to Proceed.

ARTICLE 69 "PARTIAL PAYMENTS"

Add the following:

Payment will be made by the Owner to the Contractor within 40 days' receipt of the written recommendation of payment from the Engineer.

ARTICLE 69 "PARTIAL PAYMENTS"

Delete Sub-Article C "DEDUCTION FROM ESTIMATE" in its entirety and substitute the following:

DEDUCTION FROM ESTIMATE

The OWNER will deduct from the estimate, and retain as part security, 10 percent of the amount earned for work satisfactorily completed. A deduction and retainage of 10 percent will be made on the estimated amount earned for approved items of material delivered to and properly stored at the jobsite but not incorporated into the work. When the work for an individual Notice to Proceed is 90 percent complete, the OWNER may reduce the retainage to 5 percent of the dollar value of all work satisfactorily completed to date associated with that Notice to Proceed, provided the CONTRACTOR is making satisfactory progress and there is no specific cause for a greater retainage. The OWNER may reinstate the retainage up to 10 percent if the OWNER determines, at his discretion, that the CONTRACTOR is not making satisfactory progress or where there is other specific cause for such withholding. The remaining 5 percent will be held until final completion of the entire project.

ARTICLE 69 "PARTIAL PAYMENTS"

Delete Subarticle E "PAYMENT" in its entirety and substitute the following:

PAYMENT

After deducting the retainage and the amount of all previous partial payments made to the Contractor from the amount earned the amount due will be made payable to the Contractor. Recommendations for payment received by the Owner less than 40 days prior to the scheduled day for payment will not be processed or paid until the following month.

The OWNER will withhold progress payments until the Contractor has satisfied the above conditions.

ARTICLE 72 "FINAL PAYMENT"

Delete Article "FINAL PAYMENT" in its entirety and substitute the following:

FINAL PAYMENT

Upon completion of the work the Contractor shall notify the Engineer, in writing, that he has completed it and shall request final payment. The Contractor shall be responsible for keeping an accurate and detailed record of his actual construction. Upon completion of construction and before final acceptance and payment the Contractor shall furnish the Engineer as-built drawings of his construction. Upon receipt of a request for final payment and the as-built drawings the Engineer will inspect and, if acceptable, submit to the Owner his recommendation as to acceptance of the completed work and as to the final estimate of the amount due the Contractor. Upon approval of this final estimate by the Owner and compliance by the Contractor with provisions in Article RELEASE OF LIENS OR CLAIMS, and other provisions as may be applicable, the Owner shall pay to the Contractor all monies due him under the provisions of these Contract Documents.

Add the following;

A. Acceptance and Final Payment.

Whenever the Contractor has completely performed the work provided for under the Contract and the Engineer has performed a final inspection and made final acceptance and subject to the terms of the Engineer will prepare a final estimate showing the value of the work as soon as the Engineer makes the necessary measurements and computations. The Engineer will correct all prior estimates and payments in the final estimate and payment. The OWNER will pay the estimate, less any sums that the OWNER may have deducted or

retained under the provisions of the Contract, as soon as practicable after final acceptance of the work, provided the Contractor has met the requirements of (1) through (8) below.

The Contractor has agreed in writing to accept the balance due or refund the overpayment, as determined by the OWNER, as full settlement of his account under the Contract and of all claims in connection therewith, or the Contractor, accepted the balance due or refunded the overpayment, as determined by the OWNER, with the stipulation that his acceptance of such payment or the making of such refund does not constitute any bar, admission, or estoppel, or have any effect as to those payments in dispute or the subject of a pending claim between the Contractor and the OWNER. To receive payment based on a FINAL PAYMENT CERTIFICATE, The Contractor further agrees, by submitting a FINAL PAYMENT CERTIFICATE that any pending or future arbitration claim or suit is limited to those particulars, including the itemized amounts, defined in the original FINAL PAYMENT CERTIFICATE , and that he will commence with any such arbitration claim or suit within 15 calendar days from and after the time of final PAYMENT of the work and that his failure to file a formal claim within this period constitutes his full acceptance of the Engineer's final estimate and payment. The overpayment refund check from the Contractor, if required, will be considered a part of any Acceptance Letter executed.

1 The Contractor has properly maintained the project, as specified hereinbefore.

2 The Contractor has furnished a sworn affidavit to the effect that the Contractor has paid all bills and no suits are pending (other than those exceptions listed, if any) in connection with work performed under the Contract and that the Contractor has not offered or made any gift or gratuity to, or made any financial transaction of any nature with, any employee of the OWNER in the performance of the Contract.

3 The surety on the contract bond consents, by completion of their portion of the affidavit and surety release subsequent to the Contractor's completion of his portion, to final payment to the Contractor and agrees that the making of such payment does not relieve the surety of any of its obligations under the bond.

4 The Contractor has furnished all required mill tests and analysis reports to the Engineer.

5 The Contractor has furnished as-built drawings in AutoCAD and Adobe PDF, in accordance with all supplied data collections and files to be compatible with ESRI ArcGIS 10.2.2 Software.

ADD ARTICLE 75 RESPONSIBILITY OF CONTRACTOR TO ACT IN AN EMERGENCY

A. The city shall pay no additional compensation for hurricane and or any other acts of nature.

B. CLEANUP PROCEDURES FOR HURRICANE WARNINGS AND HURRICANE WATCH. In the event the owner or National Oceanographic and Atmospheric Administration (NOAA) issues a Tropical Storm Watch or a Hurricane Watch for the Keys, the Engineer will contact the Contractor informing him that the Watch has been established. Within four (4) hours of the notice the Contractor shall provide the Engineer with a written plan and schedule describing how and when the Contractor will remove all unnecessary items from the work area and tie down all necessary supplies and barricades in the event a Tropical Storm Warning or a Hurricane Warning is issued. The Contractor shall remove all unnecessary items from work areas and shall tie down all movable objects (under 200 lbs.) The Engineer will determine "necessary" items. The Owner shall not be liable for any financial hardship or delays caused as a result of demobilization or remobilization of work due to the above.

ADD ARTICLE 76 CITY OF KEY WEST LICENSES, PERMITS AND FEES

A. Pursuant to the Public Proposal Disclosure Act, there are a number of licenses, permits, and/or fees a Contractor REQUIRED BY THE CITY OF KEY WEST before or during construction by virtue of this construction as part of the Contract. **Payment of these licenses, permits and/or fees is the responsibility of the Contractor unless specifically excluded.** The Contractor shall verify each required license, permit, or fee before submitting the Bid.

* * * * * *

~ This page intentionally left blank. ~

PART 4

TECHNICAL SPECIFICATIONS

~ This page intentionally left blank. ~

SECTION 03 01 30.71

CONCRETE REHABILITATION

PART 1 GENERAL

1.1 REFERENCES

The publications listed below form a part of this specification to the extent referenced. The publications are referred to within the text by the basic designation only.

ASTM INTERNATIONAL (ASTM)

ASTM C144	Standard Specification for Aggregate for Masonry Mortar
ASTM C31/C31M	Standard Practice for Making and Curing Concrete Test Specimens in the Field
ASTM C33/C33M	Standard Specification for Concrete Aggregates
ASTM C39/C39M	Standard Test Method for Compressive Strength of Cylindrical Concrete Specimens
ASTM C881/C881M	Standard Specification for Epoxy-Resin-Base Bonding Systems for Concrete

1.2 DEFINITIONS

1.2.1 Epoxy Resin Binder

A two-component epoxy bonding system in low and medium viscosities used by itself as a primer or for producing epoxy concrete or mortars when mixed with aggregate.

1.2.2 Epoxy Concrete

A combination of epoxy resin binder and fine and coarse aggregate used in the repair of spalling along joints or cracks, small surface spalls or "popouts."

1.2.3 Epoxy Mortar

A combination of epoxy resin binder and fine aggregate used in the surface repair of non-structural cracks and filling of saw kerfs.

1.2.4 Non-Pressure Epoxy Grout

A combination of epoxy resin binder, a mineral filler and a thixotropic agent used in cementing dowels in place and the repair of non-structural cracks.

1.2.5 Pressure Grouting Epoxy

A low viscosity epoxy resin system pumped under pressure into structural cracks in walls or pavements.

1.3 SUBMITTALS

The following shall be submitted:

SD-05 Design Data

Job mix formula;

SD-06 Test Reports

Sieve analysis test for aggregate

Epoxy resin binder;

Epoxy grout tests;

SD-07 Certificates

Epoxy resin binder

Epoxy grout;

SD-08 Manufacturer's Instructions

Epoxy repair material;

Submit for mixing and applying.

1.4 QUALITY ASSURANCE

1.4.1 Design Data

1.4.1.1 Job Mix Formula

Submit, at least 15 days before work commences, a job-mix formula for each use of epoxy concrete and epoxy mortar. Test reports shall accompany the mix design. Identify the proposed source of the materials and state the proportions of aggregates and epoxy resin. When determining job mix, use samples of materials to be used on the job.

a. Trial batches: Perform a minimum of three trial batchings. Try different aggregate-resin proportions to obtain satisfactory placing and finishing characteristics but keep the proportion by weight of aggregate to epoxy resin binder at least five to one. When mixing, add the fine aggregates first, and then the coarse aggregates. The final trial batch should be sufficiently wet so that some fines will "bleed" to the surface during finishing operations.

b. Supporting criteria: Include in the submittal the following data for each trial batch:

(1) Proportions by weight

(2) Unit weights and specific gravities of constituents

(3) Batch weights

(4) Compressive strengths of 3″x6″ cylinders, made in accordance with ASTM C31/C31M, air cured for 7 days and tested in accordance with ASTM C39/C39M. Compressive strength shall be a minimum of 5000 psi.

(5) Curing time

1.4.2 Test Reports

1.4.2.1 Epoxy Resin Binder

Include the following:

a. Viscosity

b. Consistency

c. Gel time

d. Absorption

e. Shrinkage

f. Thermal compatibility

1.4.2.2 Epoxy Resin Grout

Include the following:

a. Epoxy number

b. Consistency

c. Compressive single shear strength

d. Pot life

1.5 DELIVERY, STORAGE, AND HANDLING

Inspect materials delivered to site for damage, unload and store with a minimum of handling. Deliver epoxy resin components and aggregate materials in original sealed containers and store in dry covered areas at temperatures below 100 degrees F. Remove from job site unused mixed materials which have reached end of working or pot life.

1.6 WEATHER LIMITATIONS

Halt work when weather conditions detrimentally affect the quality of patching or bonding concrete. Apply epoxy resin materials only when the contact surfaces are completely dry and if the atmospheric and surface temperature ranges are suitable for the specified epoxy material. Follow manufacturer's instructions for weather conditions and temperature ranges.

1.7 EQUIPMENT

Use a container recommended by the epoxy manufacturer as the mixing vessel. Use a power drive (air or spark-proof) propeller type blade for mixing except that hand mixing may be used for small batches. Use equipment specified by epoxy manufacturer for field mixing of aggregates and epoxy resin.

PART 2 PRODUCTS

2.1 MATERIALS

2.1.1 Epoxy

2.1.1.1 Epoxy Resin Binder for Concrete and Mortar

ASTM C881/C881M, Type III, Grade 2, Class B without mineral filler.

2.1.1.2 Non-Pressure Epoxy Grout

ASTM C881/C881M Type IV, Grade 3, Class B or C with or without mineral filler.

2.1.1.3 Crack Sealer for Pressure Grouting

ASTM C881/C881M, Type IV, Grade 1, Class B or C without filler.

2.1.1.4 Crack Surface Sealer for Pressure Grouting

ASTM C881/C881M, Type IV, Grade 3, Class B or C with mineral filler.

2.1.2 Aggregate

For material passing No. 200 sieve provide a non-plastic material composed of a minimum of 75 percent limestone dust, talc or silica inert filler. Provide dry aggregate.

a. For epoxy concrete: ASTM C33/C33M, maximum size 3/8”. Conform to the following requirements:

Sieve Designation	Percent Passing by Weight
1/2"	100
3/8”	98-100
No. 4	70-80

Sieve Designation	Percent Passing by Weight
No. 8	50-65
No. 16	37-53
No. 30	20-37
No. 50	10-20
No. 100	5-10
No. 200	3-5

b. For epoxy mortar: ASTM C144, maximum size No. 8 sieve or No. 40 sieve.

PART 3 EXECUTION

3.1 PREPARATION

3.1.1 Epoxy Concrete

3.1.1.1 Patch Areas

Remove loose concrete from the spalled areas indicated. Inspect the cavity for remaining defective concrete by tapping with a hammer or steel rod and listening for dull or hollow sounds. In areas where tapping does not produce a solid tone, remove additional concrete until testing produces a solid tone. Make the entire cavity at least 1″ deep. Sawcut edges of cavity to avoid feather edging. Prepare surface of cavity by sandblasting, grinding, or water blasting. Remove dust, dirt, and loosely bonded material resulting from cleaning. Ensure cavity surfaces are dry.

3.1.1.2 Spalls at Joints and Cracks

For spalls to be repaired that are adjacent to joints and working cracks insert preformed joint filler to the working faces of the spall. Trim filler to fit shape of the working faces of joint or crack so epoxy material is prevented from bypassing filler. Where practicable, extend filler horizontally and vertically into joint or crack opening. Secure filler strip in place prior to and during placement of epoxy concrete. Apply a bond breaker to working faces at keyed joints. Keep bond breaker off of concrete surface to be bonded.

3.1.2 Epoxy Mortar for Cracks and Saw Kerfs

Apply epoxy mortar to newly exposed loose and unsound materials. Prepare surfaces by sandblasting, scarifying or waterblasting. Remove dust, dirt, and loosely bonded material resulting from cleaning. Ensure surfaces are dry before application of epoxy mortar.

3.1.3 Epoxy Grout for Cracks

Apply grout to newly exposed concrete free of loose and unsound materials. Prepare surfaces by sandblasting, scarifying or waterblasting. Remove dust, dirt, and loosely bonded material resulting from cleaning. Ensure surfaces are dry before application of epoxy grout.

3.2 MIXING MATERIALS

Make batches small enough to ensure placement before binder sets. Mix materials in accordance with manufacturer's recommendations.

3.3 PLACEMENT

No work outlined in this section shall be performed below Mean High Water.

3.3.1 Epoxy Concrete

Prime dry cavity surfaces with epoxy resin using a stiff bristle brush. Make coating approximately 1/64″ thick. Place epoxy concrete while primer is still tacky and in layers not exceeding one inch thick. Use vibratory floats, plates, or hand tampers to consolidate the concrete. Level each layer and screed the final surface to match the adjoining surfaces. Remove excess epoxy concrete on adjacent surfaces before the concrete hardens. Do not feather epoxy concrete out onto adjacent surfaces.

3.3.2 Epoxy Mortar

Prime surfaces with epoxy resin binder. Scrub prime coat into surface with a stiff bristle brush. Make coating approximately 1/64″ thick. Place epoxy mortar while primer is still tacky. Apply at a thickness recommended by the manufacturer. Work mortar into place and consolidate thoroughly so that contact surfaces are wetted by the mortar. Finish surface of mortar to the required texture. Do not feather edge epoxy mortar onto adjacent surfaces.

3.3.3 Non-Pressure Epoxy Grout

3.3.3.1 Cementing Dowels

Immediately prior to placing the dowel, clean hole of dust and other deleterious material with a high pressure air hose. Fill hole halfway with grout. Insert dowel in hole by rotating it at least one complete turn while tapping it down. If necessary add more grout to fill hole.

3.3.3.2 Epoxy Grout for Cracks

Apply epoxy grout at a thickness recommended by the manufacturer. Work grout into place and consolidate thoroughly so that contact surfaces are wetted by the grout. Finish surface of grout to the required texture. Do not feather edge epoxy grout onto adjacent surfaces.

3.3.4 Pressure Grouting of Cracks

Clean each crack of dust, dirt, loose concrete and unsound material. Insert a valve at both ends of each crack, at the junction of two cracks, and along the length of each crack at 12″ to 16″ intervals. Fill crack between valves with crack surface sealer. After crack surface sealer has hardened and cured, pump crack sealer into valve at one end of crack. For vertical

surfaces start at lowest valve and work upwards. As crack sealer appears atnext valve, pinch closed pumping valve and move to next valve and commence pumping. Continue procedure until other end of crack is reached. Avoid delays in pumping operation.After crack sealer has hardened and cured grind valves off flush with concrete surface. Coat areas of valves with crack surface sealer and allow to harden and cure.

3.4 CURING

Cure epoxy materials in accordance with manufacturer's recommendations.

3.5 FIELD QUALITY CONTROL

3.5.1 Sampling

As soon as epoxy resin and aggregate materials are available for sampling, obtain by random selection a sample of each batch. Clearly identify samples by designated name, specification number, batch number, project contract number, intended use and quantity involved.

3.5.2 Testing

At the discretion of the Owner, samples provided may be tested by the Owner for verification.

3.5.3 Inspection

Check each repaired area for cracks, spalls, popouts and loss of bond between repaired area and surrounding concrete. Check each repaired area for voids by tapping with a hammer or steel rod and listening for dull or hollow sounds. Immediately repair defects.

-- End of Section --

SECTION 03 31 29

MARINE CAST-IN-PLACE CONCRETE

PART 1 GENERAL

1.1 REFERENCES

The publications listed below form a part of this specification to the extent referenced. The publications are referred to within the text by the basic designation only. These publications will be superseded by latest printed edition if published after noted date.

AMERICAN ASSOCIATION OF STATE HIGHWAY AND TRANSPORTATION OFFICIALS (AASHTO)

AASHTO M 182	Standard Specification for Burlap Cloth Made from Jute or Kenaf and Cotton Mats
AASHTO T 259	Standard Method of Test for Resistance of Concrete to Chloride Ion Penetration

AMERICAN CONCRETE INSTITUTE INTERNATIONAL (ACI)

ACI 117	Specifications for Tolerances for Concrete Construction and Materials and Commentary
ACI 121R	Guide for Concrete Construction Quality Systems in Conformance with ISO 9001
ACI 201.2R	Guide to Durable Concrete
ACI 211.1	Standard Practice for Selecting Proportions for Normal, Heavyweight and Mass Concrete
ACI 214R	Evaluation of Strength Test Results of Concrete
ACI 301	Specifications for Structural Concrete
ACI 301M	Metric Specifications for Structural Concrete
ACI 304.2R	Placing Concrete by Pumping Methods
ACI 304R	Guide for Measuring, Mixing, Transporting, and Placing Concrete
ACI 305R	Guide to Hot Weather Concreting
ACI 306.1	Standard Specification for Cold Weather Concreting
ACI 308R	Guide to Curing Concrete

ACI 309R	Guide for Consolidation of Concrete
ACI 311.4R	Guide for Concrete Inspection
ACI 318	Building Code Requirements for Structural Concrete and Commentary
ACI 347	Guide to Formwork for Concrete
ACI SP-15	Field Reference Manual: Standard Specifications for Structural Concrete ACI 301-05 with Selected ACI References
ACI SP-2	ACI Manual of Concrete Inspection
ACI SP-66	ACI Detailing Manual

AMERICAN WELDING SOCIETY (AWS)

AWS D1.4/D1.4M	Structural Welding Code - Reinforcing Steel

ASTM INTERNATIONAL (ASTM)

ASTM A185/A185M	Standard Specification for Steel Welded Wire Reinforcement, Plain, for Concrete
ASTM A496/A496M	Standard Specification for Steel Wire, Deformed, for Concrete Reinforcement
ASTM A497/A497M	Standard Specification for Steel Welded Wire Reinforcement, Deformed, for Concrete
ASTM A615/A615M	Standard Specification for Deformed and Plain Carbon-Steel Bars for Concrete Reinforcement
ASTM A618/A618M	Standard Specification for Hot-Formed Welded and Seamless High-Strength Low-Alloy Structural Tubing
ASTM A767/A767M	Standard Specification for Zinc-Coated (Galvanized) Steel Bars for Concrete Reinforcement

ASTM A82/A82M	Standard Specification for Steel Wire, Plain, for Concrete Reinforcement
ASTM A934/A934M	Standard Specification for Epoxy- Coated Prefabricated Steel Reinforcing Bars
ASTM C1017/C1017M	Standard Specification for Chemical Admixtures for Use in Producing Flowing Concrete
ASTM C1064/C1064M	Standard Test Method for Temperature of Freshly Mixed Hydraulic-Cement Concrete
ASTM C1077	Standard Practice for Laboratories Testing Concrete and Concrete Aggregates for Use in Construction and Criteria for Laboratory Evaluation
ASTM C1107/C1107M	Standard Specification for Packaged Dry, Hydraulic-Cement Grout (Nonshrink)
ASTM C1157/C1157M	Standard Specification for Hydraulic Cement
ASTM C1202	Standard Test Method for Electrical Indication of Concrete's Ability to Resist Chloride Ion Penetration
ASTM C1218/C1218M	Standard Specification for Water-Soluble Chloride in Mortar and Concrete
ASTM C1240	Standard Specification for Silica Fume Used in Cementitious Mixtures
ASTM C1260	Standard Test Method for Potential Alkali Reactivity of Aggregates (Mortar-Bar Method)
ASTM C138/C138M	("Unit Weight"), Yield, and Air Content (Gravimetric) of Concrete
ASTM C143/C143M	Standard Test Method for Slump of Hydraulic-Cement Concrete
ASTM C150/C150M	Standard Specification for Portland Cement
ASTM C171	Standard Specification for Sheet Materials for Curing Concrete
ASTM C172/C172M	Standard Practice for Sampling Freshly Mixed Concrete

ASTM C173/C173M	Standard Test Method for Air Content of Freshly Mixed Concrete by the Volumetric Method
ASTM C 227	Standard Test Method for Potential Alkali Reactivity of Cement-Aggregate Combinations (Mortar-Bar Method)
ASTM C231/C231M	Standard Test Method for Air Content of Freshly Mixed Concrete by the Pressure Method
ASTM C260/C260M	Standard Specification for Air- Entraining Admixtures for Concrete
ASTM C295/C295M	Petrographic Examination of Aggregates for Concrete
ASTM C31/C31M	Standard Practice for Making and Curing Concrete Test Specimens in the Field
ASTM C33/C33M	Standard Specification for Concrete Aggregates
ASTM C39/C39M	Standard Test Method for Compressive Strength of Cylindrical Concrete Specimens
ASTM C42/C42M	Standard Test Method for Obtaining and Testing Drilled Cores and Sawed Beams of Concrete
ASTM C441	Effectiveness of Pozzolans or Ground Blast-Furnace Slag in Preventing Excessive Expansion of Concrete Due to the Alkali-Silica Reaction
ASTM C469/C469M	Static Modulus of Elasticity and Poisson's Ratio of Concrete in Compression
ASTM C494/C494M	Standard Specification for Chemical Admixtures for Concrete
ASTM C496/C496M	Standard Test Method for Splitting Tensile Strength of Cylindrical Concrete Specimens
ASTM C59/C59M	Gypsum Casting Plaster and Gypsum Molding Plaster
ASTM C595/C595M	Standard Specification for Blended Hydraulic Cements
ASTM C618	Standard Specification for Coal Fly Ash and Raw or Calcined Natural Pozzolan for Use in Concrete

ASTM C642	Density, Absorption, and Voids in Hardened Concrete
ASTM C805/C805M	Rebound Number of Hardened Concrete
ASTM C881/C881M	Standard Specification for Epoxy-Resin-Base Bonding Systems for Concrete
ASTM C920	Standard Specification for Elastomeric Joint Sealants
ASTM C94/C94M	Standard Specification for Ready- Mixed Concrete
ASTM C989/C989M	Standard Specification for Slag Cement for Use in Concrete and Mortars
ASTM D1179	Fluoride Ion in Water
ASTM D 1339	Sulfite Ion in Water
ASTM D1751	Standard Specification for Preformed Expansion Joint Filler for Concrete Paving and Structural Construction (Nonextruding and Resilient Bituminous Types)
ASTM D1752	Standard Specification for Preformed Sponge Rubber Cork and Recycled PVC Expansion
ASTM D 3867	Nitrite-Nitrate in Water
ASTM D512	Chloride Ion in Water
ASTM D516	Sulfate Ion in Water
ASTM E329	Standard Specification for Agencies Engaged in the Testing and/or Inspection of Materials Used in Construction

1.2 SUBMITTALS

The following shall be submitted:

SD-01 Preconstruction Submittals

Concrete Placement and Compaction Curing Concrete

Elements SD-02 Shop Drawings

Construction and expansion joints;

G Formwork

Reinforcing steel;

SD-03 Product Data

Admixtures

Air

Entraining

Aggregates

Joint filler

Joint

sealants

Materials for curing concrete

Non-shrink grout

Preformed joint

filler Reinforcing

Bars

Reinforcement and Protective Coating

Reinforcement supports

Sealer-hardener

Construction Joints

SD-05 Design Data

Mixture designs;

SD-06 Test

Reports

Aggregates

Admixtures

Cement

Concrete mixture

proportions Silica fume

Reinforcing

Bars Water

Fly Ash

Natural Pozzolan

Ground Iron Blast-Furnace Slag

Epoxy Bonding Compound

SD-07 Certificates

Admixtures

Quality

Assurance

Silica Fume Manufacturer's Supplier

Representative Field testing technician and

testing agency

1.3 MODIFICATION OF REFERENCES

Accomplish work in accordance with ACI publications except as modified herein. Consider the advisory or recommended provisions to be mandatory, as though the word "shall" had been substituted for the words "should" or "could" or "may," wherever they appear. Interpret reference to the "Building Official," the "Structural Engineer,"

1.4 DELIVERY, PLACING, STORAGE, AND HANDLING OF CONCRETE

Follow ACI 301M, ACI 304R, and ASTM A934/A934M requirements and recommendations. Do not deliver concrete until vapor barrier, forms, reinforcement, embedded items, and chamfer strips are in place and ready for concrete placement. Store reinforcement of different sizes and shapes in separate piles or racks raised above the ground. Protect materials from contaminants such as grease, oil, and dirt. Ensure materials can be accurately identified after bundles are broken and tags removed.

1.5 QUALITY ASSURANCE

1.5.1 Concrete Mixture Designs

At least 30 days prior to concrete placement, submit proportions for a concrete mixture for each strength and type of concrete. Submit a complete list of materials including type; brand; source and amount of cement, aggregate, fly ash, (or slag pozzolans), ground slag, anti-washout and other admixtures for underwater concreting, corrosion inhibitors; and applicable reference specifications. Submit additional data regarding concrete aggregates if the source of aggregate changes. Submittal shall clearly indicate where each mixture will be used when more than one mix design is submitted. The approval of aggregate, fly ash, and

pozzolan tests results shall have been within 6 months of submittal date. Obtain acknowledgement of receipt prior to concrete placement. The mixture shall be prepared by an accredited laboratory experienced in this field and under the direction of a licensed/registered civil engineer, who shall sign all reports and designs.

1.5.2 Drawings

1.5.2.1 Reinforcing Steel

ACI SP-66. Provide bending and cutting diagrams, assembly diagrams, splicing placement and laps of bars, shapes, dimensions, and details of bar reinforcing, accessories, and concrete cover. Do not scale dimensions from structural drawings to determine lengths of reinforcing bars. Only complete drawings will be accepted.

1.5.2.2 Formwork

ACI 347. Include design calculations indicating arrangement of forms, sizes and grades of supports (lumber), panels, and related components. Indicate placement schedule, construction, and location and method of forming control joints. Include locations of inserts, pipework, conduit, sleeves, and other embedded items. Furnish drawings and descriptions of shoring and reshoring methods proposed for slabs, beams, and other horizontal concrete members.

1.5.3 Certificates

1.5.3.1 Curing Concrete Elements

Submit proposed materials and methods for curing concrete elements.

1.5.3.2 Concrete Placement and Compaction

a. Submit technical literature for equipment and methods proposed for use in placing concrete. Include pumping or conveying equipment including type, size and material for pipe, valve characteristics, and the maximum length and height concrete will be pumped. No adjustments shall be made to the mixture design to facilitate pumping.

b. Submit technical literature for equipment and methods proposed for vibrating and compacting concrete. Submittal shall include technical literature describing the equipment including vibrator diameter, length, frequency, amplitude, centrifugal force, and manufacturer's description of the radius of influence under load. Where flat work is to be cast, provide similar information relative to the proposed compacting screed or other method to ensure dense placement.

1.5.3.3 Quality Assurance

Develop and submit for approval a quality control plan in accordance with the guidelines of ACI 121R and as specified herein. The plan shall include plans for the concrete supplier, the reinforcing steel supplier, and installer. Maintain a copy of ACI SP-15 and CRSI Manual of Practice at the project site.

1.5.3.4 Field Testing Technician and Testing Agency

Submit data on qualifications of proposed testing agency and technicians for approval by the Engineer prior to performing any work.

a. Work on concrete under this contract shall be performed by an ACI Concrete Field Testing Technician Grade 1 or Grade 2 qualified in accordance with ACI SP-2 or equivalent. Equivalent certification programs shall include requirements for written and performance examinations as stipulated in ACI SP-2.

b. Testing agencies that perform testing services on reinforcing steel shall meet the requirements of ASTM E329.

c. Testing agencies that perform testing services on concrete materials shall meet the requirements of ASTM C1077.

1.5.3.5 Mixture Designs

Provide a detailed report of materials and methods used, test results, and the field test strength (fcr) for marine concrete required to meet durability requirements.

1.5.4 Test Reports

1.5.4.1 Concrete Mixture Proportions

a. Submit copies of test reports by independent test labs conforming to ASTM C1077 showing that the mixture has been successfully tested to produce concrete with the properties specified and that mixture will be suitable for the job conditions. Test reports shall be submitted along with the concrete mixture proportions. Obtain approval before concrete placement.

b. Fully describe the processes and methodology whereby mixture proportions were developed and tested and how proportions will be adjusted during progress of the work to achieve, as closely as possible, the designated levels of relevant properties.

1.5.4.2 Fly Ash and Natural Pozzolan

Submit test results in accordance with ASTM C618. Submit test results performed within 6 months of submittal date.

1.5.4.3 Ground Iron Blast-Furnace Slag

Submit test results in accordance with ASTM C989/C989M for ground iron blast-furnace slag. Submit test results performed within 6 months of submittal date.

1.5.4.4 Silica Fume

Submit test results in accordance with ASTM C1240 for silica fume. Data shall be based upon tests performed within 6 months of submittal.

1.5.4.5 Aggregates

Submit test results for aggregate quality in accordance with ASTM C33/C33M, and the combined graduation curve for grading proposed for use in the work and used in the mixture qualification, and ASTM C295/C295M for results of petrographic examination. Where there is potential for alkali-silica reaction, provide results of tests conducted in accordance with ASTM C 227 or ASTM C1260. Submit results of all tests during progress of the work in tabular and graphical form as noted above, describing the cumulative combined aggregate grading and the percent of the combined aggregate retained on each sieve.

1.5.4.6 Admixtures

Submit test results in accordance with ASTM C494/C494M and ASTM C1017/C1017M for concrete admixtures, ASTM C260/C260M for air-entraining agent, and manufacturer's literature and test reports for corrosion inhibitor and anti- washout admixture. Submitted data shall be based upon tests performed within 6 months of submittal.

1.5.4.7 Cement

Submit test results in accordance with ASTM C150/C150M portland cement and/or ASTM C595/C595M and ASTM C1157/C1157M for blended cement. Submit current mil data.

1.5.4.8 Water

Submit test results in accordance with ASTM D512 and ASTM D516.

1.5.4.9 Reinforcement and Protective Coating

Provide coating manufacturer's and coating applicator's test data sheets certifying that applied coating meets the requirements of ASTM A934/A934M.

PART 2 PRODUCTS

2.1 CONCRETE

2.1.1 Durability and Strength

ACI 201.2R and ACI 211.1. The concrete 28-day design strength (f'c) shall be as indicated on the design drawings but no less than.

2.1.2 Contractor-Furnished Mixture Proportions

a. Strength and Water-Cementitious Materials Ratio. Strength requirements shall be based on 28-day compressive strength determined on 150 by 300 mm cylindrical specimens in accordance with ASTM C39/C39M. The specified compressive strength of the concrete (f'c) for each portion of the structure shall meet the requirements in the contract documents. The maximum W/CM ratio shall be 0.40.

b. The mixture proportions for marine concrete shall be developed by the Contractor to produce the design strength (f'c) and to provide durability, workability, and mixture consistency to facilitate placement, compaction into the forms and around reinforcement without segregation or bleeding. The requirements for durability specified in subparagraph "f" below shall be incorporated in the mixture proportions.

Table 1 - Concrete Quality Requirements

Zone	Exposure Condition	Maximum W/CM	Minimum quantity of cementitious material kg/m3	Minimum quantity of portland cement kg/m3
Submerged (1) and tidal (2)	(a) Directly exposed to salt water	0.40	400	300
	(b) Subject to severe abrasion	0.40	400	300
Splash (3)	(a) Directly exposed to salt water	0.40	400	300
Atmospheric (4)	(a) Directly exposed to marine atmosphere	0.40	400	300
	(b) Protected from direct exposure to Marine atmosphere	0.45	360	300

c. The mass of fly ash, natural pozzolans, ground granulated blast-furnace slag, or silica fume that is included in the calculation of water-to-cementitious materials ratio shall have the following limits:

(1) Fly ash shall not be less than 20 percent and shall not exceed 40 percent by mass of the cementitious material. The fly ash and other pozzolans present in a Type IP or IPM blended cement, ASTM C59/C59M, shall be included in the calculated percentage. If fly ash or other pozzolan is used in concrete

with slag, the portland cement shall not be less than 50 percent of the total mass of cementitious materials. A higher percentage of fly ash may be used if tests are made using actual job materials to ascertain the early and later age strengths and durability performance specified, and the use is approved by the Engineer.

(2) The weight of ground granulated blast-furnace slag conforming to ASTM C989/C989M shall not exceed 50 percent of the weight of cement. The slag used in manufacture of a Type IS or ISM blended hydraulic cement conforming to ASTM C59/C59M shall be included in the calculated percentage. Higher percentage of ground granulated blast-furnace slag may be used if tests are made using actual job materials to ascertain the early and later age strengths and durability performance specified, and the use is approved by the owner.

(3) The maximum silica fume content shall not exceed 10 percent by mass of the cementitious material. The silica fume shall originate from the manufacture of silicon metal and ferro-silicon alloys. A high-range water reducer shall be used with silica fume for proper dispersion of the silica fume.

(4) The minimum amount of portland cement is 50 percent of the total mass of cementitious material.

d. Air Content. Concrete that will be subject to destructive exposure (other than loading and wear in a passive environment) such as freezing and thawing, severe weathering, or deicing chemicals shall be air entrained and shall conform to the air limits specified in ACI 301.

e. Slump. The concrete mixture shall be proportioned to have, at the point of deposit, a maximum slump of 4 inches as determined by ASTM C143/C143M. Where an ASTM C494/C494M, Type F or G admixture is used, the slump after the addition of the admixture shall be no less than 150 mm nor greater than 200 mm. Slump tolerances shall comply with the requirements of ACI 117.

f. Chloride Ion Penetration. To ensure the durability of concrete in marine environment, concrete shall be proportioned to have the chloride ion penetration test in accordance with ASTM C1202, and be below 750 coulombs for concrete specimens tested at 28 days. Alternatively, a ponding test in accordance with AASHTO T 259 may be performed to validate chloride ion penetration in accordance with ASTM C1202.

2.1.3 Required Average Strength of Concrete

The average compressive strength produced under field tests f'cr shall be as required by Section 5.3.2 of ACI 318.

2.2 MATERIALS

2.2.1 Cement

ASTM C150/C150M, Type II and/or ASTM C59/C59M, Type IP(MS) or IS(MS) and ASTM C 1157, Type MS blended cement except as modified herein. The tricalcium aluminate (C3A) content shall not be less than 4 percent to provide protection for the reinforcement and shall not be more than 10 percent to obtain concrete that is resistant to sulfate attack. Blended cements shall consist of a mixture of ASTM C150/C150M cement and one of the following materials: ASTM C618 pozzolan or fly ash, or ASTM C989/C989M ground granulated blast-furnace slag. Use one manufacturer for each type of cement, ground slag, fly ash, and pozzolan.

2.2.1.1 Fly Ash and Pozzolan

ASTM A618/A618M, Type N, F, or C, except that the maximum allowable loss on ignition shall be 6 percent for Types N and F. Add with cement.

2.2.1.2 Ground Iron Blast-Furnace

Slag ASTM C989/C989M, Grade 120.

2.2.1.3 Silica Fume

ASTM C1240.

2.2.2 Water

Water shall comply with the requirements of ASTM C94/C94M and the chloride and sulfate limits in accordance with ASTM D512 and ASTM D516. Mixing water shall not contain more than 500 parts per million of chlorides as Cl and not more than 100 parts per million of sulfates as SO_4. Water shall be free from injurious amounts of oils, acids, alkalies, salts, and organic materials. Where water from reprocessed concrete is proposed for use in the work, submit results of tests to verify that the treatment has negated adverse effects of deleterious materials.

2.2.3 Aggregates

ASTM C33/C33M, except as modified herein.

a. The combined aggregates in the mixture (coarse, fine, and blending sizes) shall be well graded from the coarsest to the finest as per typical gradation limits indicated in ACI 211.1.

b. Provide aggregates for exposed concrete from one source, ASTM C 227. Do not provide aggregates that react deleteriously with alkalies in cement. Refer to appendix, paragraph entitled "Test Method C227" of ASTM C33/C33M for expansion limits. Provide aggregate containing no deleterious material properties as identified by ASTM C295/C295M.

c. Where a size designation is indicated, that designation indicates the nominal maximum size of the coarse aggregate.

d. Aggregate may contain materials deleteriously reactive with alkalies in the cement, if cement contains more than 0.60 percent alkalies (percent Na_2O plus .658 percent K_2O). Provide a material such as fly ash, slag, or silica fume as specified to be effective in preventing harmful expansion due to alkali-aggregate reaction by ASTM C441.

e. Where historical data is used, provide aggregates from the same sources having the same size ranges as those used in the concrete represented by historical data.

2.2.4 Nonshrink

Grout ASTM

C1107/C1107M.

2.2.5 Admixtures

a. Provide chemical admixtures that comply with the requirements shown below and in accordance with manufacturer's recommendations, and appropriate for the climatic conditions and the construction needs. Do not use calcium chloride or admixtures containing chlorides from other than impurities from admixture ingredients.

b. The maximum concentrations of corrosion-inducing chemicals should not exceed those shown in Table 2 below. For concrete that may be in contact with prestressing steel tendons, the concentration shall not exceed 60 percent of the limits given in Table 2. The concentration in grout for prestressing ducts, shall not exceed 25 percent of the limits in Table 2.

Table 2 - Limits on Corrosion-Inducing

Chemicals	Chemical* Limits, Percent**	Test Method
Chlorides	0.10	ASTM D512
Fluorides	0.10	ASTM D1179
Sulphites	0.13	ASTM D 1339
Nitrates	0.17	ASTM D 3867

* Limits refer to water-soluble chemicals
** Limits are expressed as a percentage of the mass of the total cementitious materials.

c. Provide anti-washout admixtures for underwater placement with a proven record of performance and compatible with the chosen cement.

d. The total alkali content shall not increase the total sodium-oxide equivalent alkali content of the concrete by more than 0.3 kg/m3.

2.2.5.1 Air Entraining Admixture

Provide air entraining admixtures conforming to ASTM C260/C260M. Provide

the admixture of such a type and dosage that the total air content in the hardened concrete can be readily maintained within the limits specified in Table 3.

Table 3 - Air Content

Nominal maximum size of coarse aggregate, mm	Size Number	Total air content, percent by volume
9.5	8	6-10
12.5	7	5-9
19.0	67	4-8
25.0	57	3.5-6.5
37.5	467	3-6
50.0	357	2.5-5.5
75.0	-	1.5-4.5

2.2.5.2 Accelerating

ASTM C494/C494M, Type C.

2.2.5.3 Retarding

ASTM C494/C494M, Type B, D, or G.

2.2.5.4 Water Reducing

ASTM C494/C494M, Type A, E, or F.

2.2.5.5 High Range Water Reducer (HRWR)

ASTM C494/C494M, Type F and ASTM C1017/C1017M.

2.2.6 Materials for Forms

Provide wood, plywood, or steel. Use plywood or steel forms where a smooth form finish is required. Lumber shall be square edged or tongue-and-groove boards, free of raised grain, knotholes, or other surface defects. Plywood: PS-1, B-B concrete form panels or better. Steel form surfaces shall not contain irregularities, dents, or sags.

2.2.6.1 Form Ties and Form-Facing Material

a. Provide a form tie system that does not leave mild steel after break-off or removal any closer than 50 mm from the exposed surface. Do not use wire alone. Form ties and accessories shall not reduce the effective cover of the reinforcement.

b. Form-facing material shall be structural plywood or other material that can absorb air trapped in pockets between the form and the concrete and some of the high water-cementitious materials ratio surface paste. Maximum use is three times. Provide forms with a form treatment to prevent bond of the concrete to the form.

c. As an alternate to using an absorptive wood form contact face as a form liner, use "Zendrain" or an approved equal in strict accordance with the manufacturer's recommendations.

2.2.7 Reinforcement

Reinforcement bars shall be galvanized according to the requirements of ASTM A615/A615M, Grade 60.

2.2.7.1 Reinforcing Bars

ACI 301 unless otherwise specified. ASTM A615/A615M with the bars marked A, S, W Grade 60.

2.2.7.2 Mechanical Reinforcing Bar Connectors

ACI 301. Provide 125 percent minimum yield strength of the reinforcement bar. Coat connectors in accordance with the same requirements as reinforcing bars.

2.2.7.3 Welded Wire Fabric

ASTM A185/A185M or ASTM A497/A497M. Provide flat sheets of welded wire fabric for slabs and toppings.

2.2.7.4 Wire

ASTM A82/A82M or ASTM A496/A496M.

2.2.8 Materials for Curing Concrete

2.2.8.1 Impervious Sheeting

ASTM C171; waterproof paper, clear or white polyethylene sheeting, or polyethylene-coated burlap.

2.2.8.2 Pervious

Sheeting AASHTO M 182.

2.2.9 Liquid Chemical Sealer-Hardener Compound

Provide magnesium fluosilicate compound which when mixed with water seals and hardens the surface of the concrete. Do not use on exterior slabs exposed to freezing conditions. Compound shall not reduce the adhesion of resilient flooring, tile, paint, roofing, waterproofing, or other material applied to concrete.

2.2.10 Expansion/Contraction Joint Filler

ASTM D1751 or ASTM D1752, 13 mm or 100% recycled material meeting ASTM D1752 (subparagraph 5.1 to 5.4). Material shall be thick, unless otherwise indicated.

2.2.11 Joint Sealants

2.2.11.1 Horizontal Surfaces, 3 Percent Slope,

Maximum ASTM C920, Type M, Class 25, Use T.

2.2.11.2 Vertical Surfaces Greater Than 3 Percent

Slope ASTM C920, Type M, Grade NS, Class 25, Use T.

2.2.12 Epoxy Bonding Compound

ASTM C881/C881M. Provide Type I for bonding hardened concrete to hardened concrete; Type II for bonding freshly mixed concrete to hardened concrete; and Type III as a binder in epoxy mortar or concrete, or for use in bonding skid-resistant materials to hardened concrete. Provide Grade 1 or 2 for horizontal surfaces and Grade 3 for vertical surfaces. Provide Class A if placement temperature is below 4 degrees C; Class B if placement temperature is between 4 and 16 degrees C; or Class C if placement temperature is above
16 degrees C.

PART 3 EXECUTION

3.1 FORMS

a. ACI 301. Concrete for footings may be placed in excavations without forms upon inspection and approval by the Engineer. Excavation width shall be a minimum of 100 mm greater than indicated. Set forms mortar-tight and true to line and grade. Chamfer above grade exposed joints, edges, and external corners of concrete 20 mm unless otherwise indicated. Forms submerged in water shall be watertight.

b. Provide formwork with clean-out openings to permit inspection and removal of debris. Formwork shall be gasketed or otherwise rendered sufficiently tight to prevent leakage of paste or grout under heavy, high-frequency vibration. Use a release agent that does not cause surface dusting. Limit reuse of plywood to no more than three times. Reuse may be further limited by the Engineer if it is found that the pores of the plywood are clogged with paste to the degree that the wood does not absorb the air or the high water-cementitious materials ratio concrete surface.

c. Patch form tie holes with a nonshrink patching material in accordance with the manufacturer's recommendations and subject to approval.

3.1.1 Coating

Before concrete placement, coat the contact surfaces of forms with a nonstaining mineral oil, nonstaining form coating compound, or two coats of nitrocellulose lacquer. Do not use mineral oil on forms for surfaces to which adhesive, paint, or other finish material is to be applied.

3.1.2 Removal of Forms and Supports

After placing concrete, forms shall remain in place for the time periods specified in ACI 347, except for concrete placed underwater, forms shall remain in place 48 hours. Prevent concrete damage during form removal.

3.1.2.1 Special Requirements for Reduced Time Period

Forms may be removed earlier than specified if ASTM C39/C39M test results of field-cured samples from a representative portion of the structure or other approved and calibrated non-destructive testing techniques show that the concrete has reached a minimum of 85 percent of the design strength.

3.1.3 Reshoring

Do not allow construction loads to exceed the superimposed load which the structural member, with necessary supplemental support, is capable of carrying safely and without damage. Reshore concrete elements where forms are removed prior to the specified time period. Do not permit elements to deflect or accept loads during form stripping or reshoring. Forms on columns, walls, or other load-bearing members may be stripped after 2 days if loads are not applied to the members. After forms are removed, slabs and beams over 3 meters in span and cantilevers over 1.2 meters shall be reshored for the remainder of the specified time period in accordance with paragraph entitled "Removal of Forms." Perform reshoring operations to prevent subjecting concrete members to overloads, eccentric loading, or reverse bending. Reshoring elements shall have the same load-carry capabilities as original shoring and shall be spaced similar to original shoring. Firmly secure and brace reshoring elements to provide solid bearing and support.

3.2 GALVANIZED REINFORCEMENT PLACEMENT AND OTHER REQUIREMENTS

3.2.1 General

Follow the guidelines of job-site practices as described in the appendixes to ASTM A767/A767M. Take maximum care to avoid damage to galvanizing that may occur during handling of protected bars.

3.2.2 Bend Diameters

Follow the requirements for the minimum finished bend diameters as indicated in Table 2 of ASTM A767/A767M.

3.2.3 Reinforcement Supports

Use only supports coated with dialectic material for placing galvanized bars in the steel forms.

3.2.4 Splicing

As indicated. For splices not indicated, ACI 301. Do not splice at points of maximum stress. Overlap welded wire fabric the spacing of the cross wires, plus 50 mm. AWS D1.4/D1.4M. Welded splices shall be approved prior to use.

3.2.5 Cover

Concrete cover for reinforcement shall be no less than 3 inches, unless specified otherwise in the design drawings. Placement tolerance is plus 6 mm.The cover to the principle reinforcing bars shall be not less than 2 times the nominal maximum aggregate size nor less than 1.5 times the effective diameter of the reinforcing bars.

3.2.6 Setting Miscellaneous Material

Place and secure anchors, bolts, pipe sleeves, conduits, and other such items in position before concrete placement. Plumb anchor bolts and check location and elevation. Temporarily fill voids in sleeves with readily removable material to prevent the entry of concrete. Electrically isolate exposed steel work and its anchor systems from the primary steel reinforcement with at least 50 mm of concrete. Coat exposed steel work to reduce corrosion. Take particular care to ensure against corrosion on edges and horizontal surfaces.

3.2.7 Construction Joints

Locate joints to least impair strength. Continue reinforcement across joints unless otherwise indicated.

3.2.8 Expansion Joints and Contraction Joints

Provide expansion joint at edges of interior floor slabs on grade abutting vertical surfaces, and as indicated. Make expansion joints 13 mm wide unless indicated otherwise. Fill expansion joints not exposed to weather with preformed joint filler material. Completely fill joints exposed to weather with joint filler material and joint sealant. Do not extend reinforcement or other embedded metal items bonded to the concrete through any expansion joint unless an expansion sleeve is used. Place contraction joints, either formed or saw cut or cut with a jointing tool, to the indicated depth after the surface has been finished. Sawed joints shall be completed within 4 to 12 hours after concrete placement. Protect joints from intrusion of foreign matter.

3.2.9 Waterstop Splices

Fusion weld in the field.

3.2.10 Pits and Trenches

Place bottoms and walls monolithically or provide waterstops and keys.

3.3 BATCHING, MEASURING, MIXING, AND TRANSPORTING CONCRETE

ASTM C94/C94M, ACI 301, and ACI 304R, except as modified herein. Batching equipment shall be such that the concrete ingredients are consistently measured within the following tolerances: 1 per cent for cement and water, 2 percent for aggregate, and 3 percent for admixtures. Furnish mandatory batch tickets imprinted with mix identification, batch size, batch design and measured weights, moisture in the aggregates, and time batched for each load of ready mix concrete. When a pozzolan is batched cumulatively with the cement, it shall be batched after the cement has entered the weight hopper.

3.3.1 Measuring

Make measurements at intervals as specified in paragraphs entitled "Sampling" and "Testing."

Adjust batch proportions to replicate the mixture design using methods provided in the approved quality assurance plan. Base the adjustments on results of tests of materials at the batch plant for use in the work. Maintain a full record of adjustments and the basis for each.

3.3.2 Mixing

ASTM C94/C94M and ACI 301. Machine mix concrete. Begin mixing within 30 minutes after the cement has been added to the aggregates. Place concrete within 90 minutes of either addition of mixing water to cement and aggregates or addition of cement to aggregates if the air temperature is less than 29 degrees C. Reduce mixing time and place concrete within 60 minutes if the air temperature is greater than 29 degrees C except as follows: if set retarding admixture is used and slump requirements can be met, limit for placing concrete may remain at 90 minutes. Additional water may be added, if both the specified maximum slump and water-cementitious material ratio are not exceeded. When water is added, an additional 30 revolutions of the mixer at mixing speed is required. If time of discharge exceeds time required by ASTM C94/C94M, submit a request along with description of precautions to be taken. If the entrained air content falls below the specified limit, add a sufficient quantity of admixture to bring the entrained air content within the specified limits. Dissolve admixtures in the mixing water and mix in the drum to uniformly distribute the admixture throughout the batch.

3.3.3 Transporting

Transport concrete from the mixer to the forms as rapidly as practicable. Prevent segregation or loss of ingredients. Clean transporting equipment thoroughly before each batch. Do not use aluminum pipe or chutes. Remove concrete which has segregated in transporting and dispose of as directed.

3.4 PLACING CONCRETE

Place concrete as soon as practicable after the forms and the reinforcement have been inspected and approved. Do not place concrete when weather conditions prevent proper placement and consolidation; in uncovered areas during periods of precipitation; or in standing water. Prior to placing concrete, remove dirt, construction debris, water, snow, and ice from within the forms. Deposit concrete as close as practicable to the final position in the forms. Do not exceed a free vertical drop of one m from the point of discharge. Place concrete in one continuous operation from one end of the structure towards the other or lifts for vertical construction. Position grade stakes on 3 m centers maximum in each direction when pouring interior slabs and on 6 m centers maximum for exterior slabs.

3.4.1 Vibration

Comply with the requirements of ACI 309R using vibrators with a minimum frequency of 9000 vibrations per minute (VPM). Use only high cycle or high frequency vibrators. Motor-in-head 60 cycle vibrators may not be used. For walls and deep beams, use a minimum of two vibrators with the first to melt down the mixture and the second to thoroughly consolidate the mass. Provide a spare vibrator at the casting site whenever concrete is placed. Place concrete in 500 mm maximum vertical lifts. Insert and withdraw vibrators approximately 500 mm apart. Penetrate at least 200 mm into the previously placed lift with the vibrator when more than one lift is required.Extract the vibrator using a series of up and down motions to drive the trapped air out of the concrete and from between the concrete and the forms.

For slab construction use vibrating screeds designed to consolidate the full depth of the concrete. Where beams and slabs intersect, use an internal vibrator to consolidate the beam. Do not vibrate concrete placed with anti- washout admixtures. Vibrators shall be equipped with rubber vibrator heads.

3.4.2 Application of Epoxy Bonding Compound

Apply a thin coat of compound to dry, clean surfaces. Scrub compound into the surface with a stiff-bristle brush. Place concrete while compound is tacky. Do not permit compound to harden prior to concrete placement.

Follow manufacturer's instructions regarding safety and health precautions when working with epoxy resins.

3.4.3 Pumping

ACI 304R and ACI 304.2R. Pumping shall not result in separation or loss of materials nor cause interruptions sufficient to permit loss of plasticity between successive increments. Loss of slump in pumping equipment shall not exceed 50 mm. Do not use pipe made of aluminum or aluminum alloy.Avoid rapid changes in pipe sizes. Limit maximum size of coarse aggregate to 33 percent of the diameter of the pipe. Maximum size of well-rounded aggregate shall be limited to 40 percent of the pipe diameter. Take samples for testing at both the point of delivery to the pump and at the discharge end.

3.4.4 Hot Weather

ACI 305R.Maintain required concrete temperature using Figure 2.1.5, "Effect of Concrete Temperatures, Relative Humidity, and Wind Velocity on

the Rate of Evaporation of Surface Moisture From Concrete" in ACI 305R to prevent the evaporation rate from exceeding one kg per square meter of exposed concrete per hour. Cool ingredients before mixing or use other suitable means to control concrete temperature and prevent rapid drying of newly placed concrete. Shade the fresh concrete as soon as possible after placing. Start curing when the surface of the fresh concrete is sufficiently hard to permit curing without damage. Provide water hoses, pipes, spraying equipment, and water hauling equipment, where job site is remote to water source, to maintain a moist concrete surface throughout the curing period. Provide burlap cover or other suitable, permeable material with fog spray or continuous wetting of the concrete when weather conditions prevent the use of either liquid membrane curing compound or impervious sheets. For vertical surfaces, protect forms from direct sunlight and add water to top of structure once concrete is set.

3.5 SURFACE FINISHES EXCEPT FLOOR, SLAB, AND PAVEMENT

3.5.1 Defects

Repair formed surfaces by removing minor honeycombs, pits greater than 600 square mm surface area or 6 mm maximum depth, or otherwise defective areas. Provide edges perpendicular to the surface and patch with nonshrink grout. Patch tie holes and defects when the forms are removed. Concrete with extensive honeycomb including exposed steel reinforcement, cold joints, entrapped debris, separated aggregate, or other defects which affect the serviceability or structural strength will be rejected, unless correction of defects is approved. Obtain approval of corrective action prior to repair. The surface of the concrete shall not vary more than the allowable tolerances of ACI 347. Exposed surfaces shall be uniform in appearance and finished to a smooth form finish unless otherwise indicated.

3.5.2 Not Against Forms (Top of Walls)

Finish surfaces not otherwise specified with wood floats to even surfaces, and match adjacent finishes.

3.5.3 Formed Surfaces

3.5.3.1 Tolerances

ACI 117 and as indicated.

3.5.3.2 As-Cast Rough Form

Provide for surfaces not exposed to public view. Patch holes and defects and level abrupt irregularities. Remove or rub off fins and other projections exceeding 6 mm in height.

3.5.3.3 As-Cast Form

Provide form facing material producing a smooth, hard, uniform texture on the concrete. Arrange facing material in an orderly and symmetrical manner and keep seams to a practical minimum. Support forms as necessary to meet required tolerances. Material with raised grain, torn surfaces, worn edges, patches, dents, or other defects which will impair the texture of

the concrete surface shall not be used. Patch tie holes and defects and completely remove fins.

3.5.4 Broom Finish

Provide concrete indicated with a broom finish.

3.6 FINISHES FOR HORIZONTAL CONCRETE SURFACES

3.6.1 Finish

ACI 301. Place, consolidate, and immediately strike off concrete to obtain proper contour, grade, and elevation before bleedwater appears. Permit concrete to attain a set sufficient for floating and supporting the weight of the finisher and equipment. If bleedwater is present prior to floating the surface, drag excess water off or remove by absorption with porous materials. Do not use dry cement to absorb bleedwater.

3.6.1.1 Scratched

Use for surfaces intended to receive bonded applied cementitious applications. After the concrete has been placed, consolidated, struck off, and leveled, the surface shall be roughened with stiff brushes of rakes before final set.

3.6.1.2 Floated

Exterior slabs where not otherwise specified. After the concrete has been placed, consolidated, struck off, and leveled, do not work the concrete further, until ready for floating. Whether floating with a wood, magnesium, or composite hand float, with a bladed power trowel equipped with float shoes, or with a powered disc, float shall begin when the surface has stiffened sufficiently to permit the operation.

3.6.1.3 Broomed

Perform a floated finish, then draw a broom or burlap belt across the surface to produce a coarse scored texture. Permit surface to harden sufficiently to retain the scoring or ridges. Broom transverse to traffic or at right angles to the slope of the slab.

3.6.1.4 Concrete Toppings Placement

ACI 301. The following requirements apply to the placement of toppings of concrete on concrete surfaces that are either freshly placed and still plastic, or on hardened base slabs.

a. Placing on a Fresh Concrete: Screed and bull float the base slab. As soon as water sheen has disappeared, lightly rake surface of the base slab with a stiff bristle broom to produce a bonding surface for the topping. Immediately spread topping mixture evenly over the roughened base before final set takes place. Give topping the finish specified.

b. Bonding to a Hardened Concrete: When the topping is to be bonded to a floated or troweled hardened base, roughen the base by scarifying, grit-blasting, scabbling, planning, flame cleaning,

or acid-etching to lightly expose aggregate and provide a bonding surface. Remove dirt, laitance, and loose aggregate by means of a stiff wire broom.Keep the clean base wet for a period of 12 hours preceding the application of the topping. Remove excess water and apply a 1:1:1/2 cement-sand-water grout, and brush into the surface of the base slab. Do not allow the cement grout to dry, and spread it only short distances ahead of the topping placement. Do not allow the temperature differential between the completed base and the topping mixture to exceed -12 degrees C at the time of placing. Place the topping and finish as indicated.

3.7 CURING AND PROTECTION

a. ACI 301 and ACI 308R unless otherwise specified. Prevent concrete from drying by misting surface of concrete. Begin curing immediately following final set. Avoid damage to concrete from vibration created by blasting, pile driving, movement of equipment in the vicinity, disturbance of formwork or protruding reinforcement, by rain or running water, adverse weather conditions, and any other activity resulting in ground vibrations. Protect concrete from injurious action by sun, rain, flowing water, frost, mechanical injury, tire marks, and oil stains. Do not allow concrete to dry out from time of placement until the expiration of the specified curing period. Do not use membrane-forming compound on surfaces where appearance would be objectionable, on any surface to be painted, where coverings are to be bonded to the concrete, or on concrete to which other concrete is to be bonded. If forms are removed prior to the expiration of the curing period, provide another curing procedure specified herein for the remaining portion of the curing period. Provide moist curing for those areas receiving liquid chemical sealer-hardener or epoxy coating. Liquid membrane forming curing compound shall not be used if ambient air temperature is 85 degrees F or higher.

b. Wet cure all concrete slabs and beams using potable water for a minimum of 7 days. Do not allow construction loads to exceed the superimposed load which the structural member, with necessary supplemental support, is capable of carrying safely and without damage.

3.7.1 Moist Curing

Remove water without erosion or damage to the structure.

3.7.1.1 Ponding or Immersion

Continually immerse the concrete throughout the curing period. Water shall not be 11 degrees C less than the temperature of the concrete.

3.7.1.2 Fog Spraying or Sprinkling

Apply water uniformly and continuously throughout the curing period. For

temperatures between 4 and 10 degrees C, increase the curing period by 50 percent.

3.7.1.3 Pervious Sheeting

Completely cover surface and edges of the concrete with two thicknesses of wet sheeting. Overlap sheeting 150 mm over adjacent sheeting. Sheeting shall be at least as long as the width of the surface to be cured. During application, do not drag the sheeting over the finished concrete nor over sheeting already placed. Wet sheeting thoroughly and keep continuously wet throughout the curing period.

3.7.1.4 Impervious Sheeting

Wet the entire exposed surface of the concrete thoroughly with a fine spray of water and cover with impervious sheeting throughout the curing period. Lay sheeting directly on the concrete surface and overlap edges 300 mm minimum. Provide sheeting not less than 450 mm wider than the concrete surface to be cured. Secure edges and transverse laps to form closed joints. Repair torn or damaged sheeting or provide new sheeting. Cover or wrap columns, walls, and other vertical structural elements from the top down with impervious sheeting; overlap and continuously tape sheeting joints; and introduce sufficient water to soak the entire surface prior to completely enclosing.

3.7.2 Liquid Membrane-Forming Curing Compound

Seal or cover joint openings prior to application of curing compound. Prevent curing compound from entering the joint. Apply in accordance with the recommendations of the manufacturer immediately after any water sheen which may develop after finishing has disappeared from the concrete surface. Provide and maintain compound on the concrete surface throughout the curing period. Do not use this method of curing where the use of Figure 2 .1.5, "effect of Concrete Temperatures, Relative Humidity, and Wind Velocity on the Rate of Evaporation of Surface Moisture From Concrete" in ACI 305R indicates that hot weather conditions will cause an evaporation rate exceeding one kg pf water per square meter per hour.

3.7.2.1 Application

Mechanically agitate curing compound thoroughly during use. Use approved power-spraying equipment to uniformly apply two coats of compound in a continuous operation. The total coverage for the two coats shall be 5 square meters maximum per L of undiluted compound unless otherwise recommended by the manufacturer's written instructions. The compound shall form a uniform, continuous, coherent film that will not check, crack, or peel. Immediately apply an additional coat of compound to areas where the film is defective. Respray concrete surfaces subjected to rainfall within 3 hours after the curing compound application.

3.7.2.2 Protection of Treated Surfaces

Prohibit pedestrian and vehicular traffic and other sources of abrasion at least 72 hours after compound application. Maintain continuity of the coating for the entire curing period and immediately repair any damage.

3.7.3 Liquid Chemical Sealer-Hardener

Apply the sealer-hardener in accordance with manufacturer's recommendations. Seal or cover joints and openings in which joint sealant is to be applied as required by the joint sealant manufacturer. The sealer-hardener shall not be applied until the concrete has been moist cured and has aged for a minimum of 30 days. Apply a minimum of two coats of sealer-hardener.

3.7.4 Curing Periods

Moist cure concrete slabs and beams using potable water for a minimum of 7 days. Continue additional curing for a total period of 21 days. Begin curing immediately after placement. Protect concrete from premature drying, excessively hot temperatures, and mechanical injury; and maintain minimal moisture loss at a relatively constant temperature for the period necessary for hydration of the cement and hardening of the concrete. The materials and methods of curing shall be subject to approval by the Engineer.

3.7.5 Requirements for Type III, High-Early-Strength Portland Cement

The curing periods shall be not less than one-fourth of those specified for portland cement, but in no case less than 72 hours.

3.8 FIELD QUALITY CONTROL

3.8.1 Evaluation of Mixture Designs

a. The adequacy of the mixture design to produce the specified compressive strength and durability shall be confirmed by testing field batches, casting concrete in a slab and a wall at the job using job materials, equipment, and personnel, and testing the hardened concrete as described herein. The slab shall be at least 2.5 m square and have thickness of at least 200 mm. The wall shall be 2.5 m long, 1.5 m high, and at least 200 mm thick. Slump shall not exceed the slump proposed for the work. Water cure the castings for 7 days.

b. Test the fresh concrete as follows:

(1) Slump in accordance with ASTM C143/C143M.

(2) Air content in accordance with ASTM C231/C231M or ASTM C173/C173M.

(3) Unit weight in accordance with ASTM C138/C138M.

c. The required average compressive strength for the field testing shall be as per Section 5.3.2 of ACI 318.

d. In addition, test 150 by 300 mm nineteen cylinders as follows:

(1) Measure and weigh each specimen to determine unit weight as they are stripped from the molds.

(2) Two at each age of 24 hours and 3 and 7 days in

accordance with ASTM C39/C39M.

(3) Three at each age of 28, 56, and 90 days in accordance with ASTM C39/C39M.

(4) Two at each age of 28 and 90 days in accordance with ASTM C496/C496M.

e. Take twenty 4-inch cores from each the wall and the slab in accordance with ASTM C42/C42M. Those to be tested at 7 days or earlier age shall be drilled on the test date and tested as cored. Those to be tested at later ages shall be drilled in adequate time for wet curing before testing. Test cores as follows:

(1) All cores: Visual inspection for signs of delamination or voids.

(2) Two cores: Static modulus of elasticity in accordance with ASTM C469/C469M at age 28 days.

(3) Two cores: Specific gravity, absorption, and voids in concrete in accordance with ASTM C642.

(4) Three cores: Resistance to chloride ion penetration in accordance with ASTM C1202 at ages 28 and 90 days.

(5) Compressive strength in accordance with ASTM C39/C39M.

two cores at 24 hours
one core at 3 days
two cores at 7 days
three cores at 28 days
two cores at 90 days
three spare cores

e. Sampling and determination of water soluble chloride ion content in accordance with ASTM C1218/C1218M. Maximum water soluble chloride ion concentrations in hardened concrete at ages from 28 to 42 days contributed from the ingredients including water, aggregates, cementitious materials, and admixtures shall not exceed the limits of Table 5 below.

f. Sampling and determination of chloride ion penetration (ponding test) in accordance with AASHTO T 259.

Table 5 - Maximum Chloride Ion Content for Corrosion Protection

Type of Member	Maximum water soluble chloride ion (C1) in concrete, percent by weight of cement
Prestressed concrete	0.06
Other Marine reinforced concrete for components listed in Section 1.1	0.15

f. Submit test results for evaluation and acceptance.

3.8.2 Sampling

a. ASTM C172/C172M. Collect samples of fresh concrete to perform tests specified. ASTM C31/C31M for making test specimens.

b. Sample concrete on a random basis except where a batch appears to be deficient and the test can be used to verify the observed deviation. Identify samples so taken in a manner that they can be segmented from other tests. Obtain at least one sample for each
100 cubic yards, or fraction thereof, of each design mixture of concrete placed in any one day. When the total quantity of concrete with a given design mixture is less than 38.2 cubic meters, the strength tests may be waived by the Engineer, if in his judgment, adequate evidence of satisfactory strength is provided.

3.8.3 Testing

3.8.3.1 Slump Tests

ASTM C143/C143M. Take concrete samples during concrete placement. The maximum slump may be increased as specified with the addition of an approved high range water reducing (HRWR) admixture provided that the water-cement ratio is not exceeded. Perform tests at commencement of concrete placement, when test cylinders are made, and for each batch (minimum) or every 8 cubic meters (maximum) of concrete.

3.8.3.2 Temperature Tests

a. Test the concrete delivered and the concrete in the forms. Perform tests in hot weather conditions above 27 degrees C for each batch (minimum) or every 8 cubic meters (maximum) of concrete, until the specified temperature is obtained, and whenever test cylinders and slump tests are made.

b. Determine temperature of each composite sample in accordance with ASTM C1064/C1064M. When the average of the highest and lowest temperature during the period from midnight to midnight is expected to drop below 4 degrees C for more than 3 successive days, concrete shall be delivered to meet the following minimum temperature at the time of placement:

(1) 13 degrees C for sections less than 300 mm in the least dimension

(2) 10 degrees C for sections 300 to 900 mm in the least dimension

(3) 7 degrees C for sections 900 to 1800 mm in the least dimension

(4) 4 degrees C for sections greater than 1800 mm in the least dimension

c. The minimum requirements may be terminated when temperatures above 10 degrees C occur during more than half of any 24 hour duration. The temperature of concrete at time of placement shall not exceed 30 degrees C.

3.8.3.3 Compressive Strength Tests

ACI 214R tests for strength - conduct strength tests of concrete during construction in accordance with the following procedures:

a. Mold and cure six 150 by 300 mm cylinders from each sample taken in accordance with ASTM C31/C31M. Prevent evaporation and loss of water from the specimen.

b. Test cylinders in accordance with ASTM C39/C39M. Test one cylinder at 3 days, two cylinders at 7 days, two cylinders at 28 days, and hold one cylinder in reserve. The compressive strength test results for acceptance shall be the average of the compressive strengths from the two specimens tested at 28 days. If one specimen in a test shows evidence of improper sampling, molding or testing, discard the specimen and consider the strength of the remaining cylinder to be the test result. If both specimens in a test show any defects, the Engineer may allow the entire test to be discarded.

c. If the average of any three consecutive strength test results is less than the specified strength (f'c) or the minimum test strength (fcr) for durability, whichever is higher, by more the 3 MPa, take a minimum of three core samples in accordance with ASTM C42/C42M, from the in-place work represented by the low test results. Locations represented by erratic core strengths shall be retested. Remove concrete not meeting strength criteria and provide new acceptable concrete. Repair core holes with nonshrink grout. Match color and finish of adjacent concrete.

d. Strength test reports shall include location in the work where the batch represented by a test was deposited, batch ticket number, time batched and sampled, slump, air content (where specified), mixture and ambient temperature, unit weight, and water added on the job. Reports of strength tests shall include detailed information of storage and curing of specimens prior to testing.

e. Final reports shall be provided within 7 days of test completion.

3.8.3.4 Air Content

ASTM C173/C173M or ASTM C231/C231M for normal weight concrete. Make air content tests on samples from the first three batches in the placement and until three consecutive batches have air contents within the range of the specified air content, at which time test every fifth batch. Maintain this test frequency until a batch is not within the specified range at which time resume testing of each batch until three consecutive batches have air contents within the specified range. Perform additional tests as necessary for control. Take air content tests from planned composite samples or from samples taken in accordance with ASTM C172/C172M at the point of concrete placement.

3.8.3.5 Chloride Ion Concentration

ACI 318. Determine water soluble chloride ion concentration. Perform test once for each mix design.

3.8.4 Non-Destructive Tests

Non-destructive tests - use of the rebound hammer in accordance with ASTM C805/C805M, or other non-destructive processes, may be permitted by the Engineer in evaluating the uniformity and relative concrete strength in place, or for selecting areas to be cored.

Evaluate and validate test results conducted on properly calibrated equipment in accordance with standard ASTM procedures.

3.8.4.1 Core Tests

Obtain and test cores in accordance with ASTM C42/C42M. If concrete in the structure is dry under service conditions, air dry cores (temperature 16 to 27 degrees C, relative humidity less than 60 percent) for 7 days before testing and test dry. If concrete in the structure will be more than superficially wet under service conditions, test the cores, after moisture conditioning, in accordance with ASTM C42/C42M.

Take at least three representative cores from each member or area of concrete in place that is considered potentially deficient. Impair the strength of the structure as little as possible. If, before testing, cores show evidence of having been damaged subsequent to or during removal from the structure, take replacement cores.

Fill core holes with low slump concrete or mortar of a strength equal to or greater than the original concrete.

The Engineer will evaluate and validate core tests in accordance with the specified procedures.

3.8.5 Acceptance of Concrete Strength

3.8.5.1 Standard Molded and Cured Strength Specimens

When the averages of all sets of three consecutive compressive strength test results equal or exceed the design compressive strength (f'c) or the required field test strength (fcr) whichever is higher, and no individual

strength test falls below the specified compressive strength (f'c) or the required field durability strength (fcr) by more than 3 MPa, whichever is higher. These criteria also apply when accelerated strength testing is specified unless another basis for acceptance is specified.

3.8.5.2 Non-Destructive Tests

Non-destructive tests may be used when permitted to evaluate concrete where standard molded and cured cylinders have yielded results not meeting the criteria.

3.8.5.3 Core Tests

When the average compressive strengths of the representative cores are equal to at least 85 percent of the design strength (f'c) or the required average test strength (fcr), whichever is higher, and if no single core is less than 75 percent of the specified strength (f'c) or the required average field test strength (fcr), whichever is higher, strength of concrete is satisfactory.

3.8.6 Inspection

ACI 311.4R. Inspect concrete placed under water with qualified engineer/divers.

-- End of Section --

SECTION 05 50 16

DECK FITTINGS

PART 1 GENERAL

1.1 REFERENCES

The publications listed below form a part of this specification to the extent referenced. The publications are referred to within the text by the basic designation only.

ASTM INTERNATIONAL (ASTM)

ASTM A 53/A 53M	Standard Specification for Pipe, Steel, Black and Hot-Dipped, Zinc-Coated, Welded and Seamless
ASTM A 153/A 153M	Standard Specification for Zinc Coating (Hot-Dip) on Iron and Steel Hardware
ASTM A 449	Specification for Hex Cap Screws, Bolts, and Studs, Steel, Heat Treated, 120/105/90 ksi Minimum Tensile Strength, General Use
ASTM A 563	Standard Specification for Carbon and Alloy Steel Nuts
ASTM B 117	Standing Practice for Operating Salt Spray (Fog) Apparatus
ASTM D 2697	Volume Nonvolatile Matter in Clear or Pigmented Coatings
ASTM D 4060	Abrasion Resistance of Organic Coatings by the Taber Abraser
ASTM F 1554	Standard Specification for Anchor Bolts, Steel, 36, 55, and 105-ksi Yield Strength
ASTM F 436	Hardened Steel Washers

THE SOCIETY FOR PROTECTIVE COATINGS (SSPC)

SSPC A	Good Painting Practice Steel Structures Painting Manual, Volume 1

SSPC AB 1	Mineral and Slag Abrasives
SSPC SP 1	Solvent Cleaning
SSPC SP 6	Commercial Blast Cleaning

1.2 SUBMITTALS

Submit the following :

SD-01 Preconstruction Submittals

A Safety Plan; G shall be submitted in accordance with paragraph entitled, "Safety Plan", of this section.

SD-03 Product Data

Manufacturer's catalog data shall be submitted for the following items:

Abrasive Blasting Material;

Organic Zinc Epoxy Primer;

Cycloaliphatic Amine Epoxy or Polyamide Bisphenol Epoxy Intermediate and Top Coat;

Grout; Sleeves; Bolts, Nuts, Sleeve Couplers, and Washers

SD-07 Certificates

Certificates shall be submitted for the following items showing conformance with referenced standards contained in this section.

Abrasive Blasting Material; G

Coating System Compatibility; G

SD-11 Closeout Submittals

Disposal of used abrasive and waste material;

1.3 DELIVERY, STORAGE AND HANDLING

Materials shall be delivered in their original unopened containers bearing the manufacturer's name, shelf life, product identification, and batch number.

Coatings, thinners, and cleaners shall be stored in tightly closed containers in a covered, well-ventilated area where they will be protected from exposure to extreme cold or heat, sparks, flame, direct sunlight, or rainfall. Manufacturer's instructions for storage limitations shall be followed.

1.4 ENVIRONMENTAL PROTECTION

Comply with all environmental requirements of the Florida Keys.

Take active measures to prevent or minimize the discharge of abrasive blast material, paint chips, paint, solvent, vapors, or other debris into the air or waters during paint removal operations.

Utilize and position paint floats, john boats, tarps and plastic sheeting as necessary to prevent material from being blown or dropping in the water. Inspect condition of barriers before each work shift and repair/reposition as required to prevent discharge into the waterways. Stop work in windy conditions or when blast or paint overspray is observed.

Use fixed or floating platforms as work surfaces when working when working at water surface to provide a surface to recover spent materials. The complete recovery of wastewater, blasting material, and paint chips is mandatory. Properly label all containers with identification of contents.

All waste shall be disposed of in accordance with state and federal regulations.

1.4.1 Abrasive Blasting Operations

All waste and solids from paint removal activities shall be collected and contained, and disposed of properly. The waste MAY NOT be allowed to discharge into storm water systems, (storm drains, pier/wharf drains, ditches, etc.), or waterways.

1.4.2 Spills into Waterways

Report all spills to the Contracting Officer.

1.5 SAFETY PLAN

A Safety Plan shall be submitted for containment, for cleaning, and for application of coating systems in accordance with OSHA regulations.

Material and Equipment Lists shall be submitted for manufacturer's style or catalog numbers, specification and drawing reference numbers, and warranty information for the Protective Coating System.

1.6 COATING SYSTEM COMPATIBILITY

Provide certification from each manufacturer of components of the Coating System, primer, intermediate, and top coat, that the supplied coating material is suitable for use in the specified coating system. Each manufacturer shall identify the specific products, including manufacturer's name, and which their product may be used with. The certification shall also provide the name of the manufacturer that will provide technical support for the entire system. When all coating materials are supplied by one manufacturer, this certification is not required.

PART 2 PRODUCTS

2.1 EXISTING CLEATS AND BOLLARDS

~~Existing cleats and bollards shall be reconditioned in place.~~ Bollard attachment bolts shall be replaced as required in plans.

2.2 GROUT

Grout shall be non-shrink grout, a mixture of cementitious material and aggregate with a minimum compressive strength of 5000 psi and a maximum aggregate size of 1/16 in.

2.3 SLEEVES

ASTM A 53/A 53M zinc coated steel pipe, Type E or S, Grade B, weight class XS (Extra Strong).

2.4 BOLTS, NUTS, SLEEVE COUPLERS, AND WASHERS

Bolts: ASTM F 1554 or ASTM A 449 as indicated. Nuts: ASTM A 563 Heavy Hex. Washers: ASTM F 436. Bolts, nuts, and washers shall be hot dipped galvanized in accordance with ASTM A 153/A 153M. The sleeve coupler shall match the anchor rod's size and can develop at least 100% of anchor rod strength.

2.5 ABRASIVE BLASTING MATERIAL

Abrasive blasting material shall be per SSPC A, Chapter 2.4 and SSPC AB 1 to SP6 (NACE NO.3).

2.6 PROTECTIVE COATINGS

2.6.1 Coating System for Mooring Fixtures

The Coating System shall consist of organic zinc epoxy primer, and then two coats of a self-priming Cycloaliphatic Amine Epoxy or Polyamide Bisphenol Epoxy. Finished Coat shall be "yellow" linear polyurethane top coat. Coatings shall be selected from the following listing and all coatings, thinners, and cleaners shall be the product of the same manufacturer. Each successive coating shall be of a contrasting color to provide a visual assurance of complete coverage.

2.6.1.1 Organic Zinc Epoxy Primer

Provide Dry Film thickness between 3.0 - 5.0 mils of a low VOC organic zinc epoxy steel primer with the following minimum characteristic:

Solid Content by Volume 65% +/- 3% when tested in accordance with ASTM D 2697.

Zinc Content by Weight 80% +/- 3% in dry film.

2.6.1.2 Cycloaliphatic Amine Epoxy or Polyamide Bisphenol Epoxy Intermediate and Top Coat

Provide two separate coats with a Dry Film thickness between 4.0 - 6.0 mils of a self-priming epoxy mastic coating with the following minimum characteristic:

Solid Content by Volume 75% +/- 2% when tested in accordance with ASTM D 2697.

Abrasion loss less than 90 mg when tested in accordance with ASTM D 4060 after 1000 cycles, CS17 wheel, 1000 gm load.

Salt Fog Test results in no Undercutting or Blistering after 1 year when tested in accordance with ASTM B 117. Total minimum dry film thickness of complete coating system shall be 16 mils.

PART 3 EXECUTION

Comply with applicable requirements of Section 09 97 13.26 "COATING OF STEEL WATERFRONT STRUCTURES".

3.1 CONTAINMENT SYSTEM

The contractor shall design and provide a containment system for the capture, containment, collection, storage and disposal of the waste materials generated by the work under this contract. Waste materials covered by this paragraph shall not include any materials or residue from removal of existing coatings or any other hazardous material.

Submit plans and drawings for the containment system and recovery of waste materials. Indicate all framework, work platforms, scaffolding, curtains, screens, tarps, method of securement, etc.

The review and acceptance of the containment system shall in no way relieve the contractor of any responsibility for obtaining the degree of capture, containment, and collection. It is the contractor's responsibility to insure the feasibility and workability of the containment system.

The contractor shall perform his operations and work schedule in a manner as to minimize leakage of the containment system. The containment system shall be properly maintained and shall not deviate from the approved drawings, without the Contracting Officers approval. If at any time during the execution of the work, the containment system fails to function satisfactory in the opinion of the Contracting Officer, the contractor shall suspend all operations, except those required to minimize adverse impact on the environment or Owner’s property. Operations shall not resume until modifications have been made to correct the cause of the failure.
Modifications shall be approved by the Owner’s Engineer.

3.2 EXISTING BOLLARDS

3.2.1 General

All existing mooring fixtures (cleats and bollards) shall be prepared and coated within 6 hours after completion of surface preparation and before rusting or recontamination occurs. Surfaces not coated within 6 hours which show rusting or contamination, regardless of the length of time

after preparation, shall be repaired.

Surface preparation and coating operations shall be sequenced so that freshly applied coatings will not be contaminated by dust or foreign matter.

Surfaces shall be inspected and degreased as required prior to subsequent surface preparation and the application of protective coatings. Degreasing shall be by solvent cleaning, detergent washing, or steam cleaning. SSPC SP 1 shall apply for solvent cleaning.

Inspect mooring fixture anchor pockets. Removed loose material in preparation of abrasive blasting of mooring fixture. Upon completion of painting and final inspection completely fill anchor pockets with non-shrink grout. Fill any internal void of bollards with non-shrink grout.

3.2.2 Abrasive Blasting (AB)

Abrasive blasting shall conform to SSPC SP 6 and SSPC A.

Compressed air used for abrasive blasting shall be free of moisture and

oil. A minimum nozzle pressure of 6 Kg/cm^2 shall be maintained.

Foreign matter shall be removed from surfaces to be coated prior to abrasive blasting using mechanical methods as specified.

Blast cleaning shall achieve a 1.0 - 3.0 mil anchor profile as indicated by a surface profile comparator, replica tape, or similar device.

Rust and corrosion shall be removed from pits and depressions.

Abrasive blast aggregate shall not be reused.

All traces of abrasive residue and dust shall be removed from the surface, leaving it clean and dry.

3.3 COATING APPLICATION

3.3.1 General Requirements

Manufacturer's instructions for thinning, mixing, handling, and applying products shall be considered a part of this specification. In the event of conflict between the requirements of this specification and the manufacturer's recommendations, this specification shall take precedence.

Compressed air used for spraying coatings shall be free of moisture and oil.

Each coat of material applied shall be free from runs; sags; blisters; bubbled; mud cracking; variation in color, glass, and texture; holidays (missed areas); excessive film build; foreign contaminants; and dry overspray.

No coating shall be applied when rain is imminent or when the temperature or humidity is outside the limits recommended by the coating manufacturer.

Surface temperature shall be at least 5 degrees F above the dew point.

Coatings shall be thoroughly worked into all joints, crevices, and open spaces. Special attention shall be paid to welds, cutouts, sharp edges, rivets, crevices, and bolts to ensure proper coverage and thickness.

Newly coated surfaces shall be adequately protected from damage.

Coatings shall be applied by airless or conventional spray. Airless spraying shall be used for uniform large surface areas. Conventional spraying shall be used for small areas of intricate configuration and for touchup. During application of inorganic zinc coating, maintain uniform suspension.

3.3.2 Mixing and Application Procedures

Materials shall be mixed, stirred, and strained per the coating manufacturer's recommendations.

Continuous slow agitation of the materials shall be provided during application of inorganic zinc coating, maintain uniform suspension. Continuous rapid agitation shall be avoided.

Material shall be thinned for workability and improved spray characteristics only.

Material shall be applied in even, parallel passes, overlapping 50 percent. Special attention shall be paid to welds, cutouts, sharp edges, crevices, and bolts to ensure proper coverage and thickness.

3.3.3 Dry-Film Thickness (DFT)

Coatings shall be applied to the following dry-film thicknesses:

Coating System:

a. Inorganic primer zinc: 2.5 to 4 mils

b. Inhibitive polyamide epoxy, second coat: 2 to 4 mils

c. Cycloaliphatic Amine Epoxy or Linear Polyurethane, third coat:2 to 4 mils, but sufficient to hide previous coat

When dry through (dry to handle), the film thickness shall be checked with a calibrated nondestructive dry-film thickness gage. If less than specified thickness, additional material shall be applied as required. Proper DFT for the inorganic zinc coating shall be obtained in a single application which may consist of multiple passes, while coating is still wet.

3.4 TOUCH-UP

Abrasion or defect repairs that occurred shall conform to the coating manufacturer's instructions.

3.5 DISPOSAL OF USED ABRASIVE AND WASTE MATERIAL

Dispose of debris, rubbish, scrap, and other nonsalvageable materials resulting from removal operations with all applicable federal, state and local regulations as contractually specified. Storage of removed materials on the project site is prohibited.

3.5.1 Removal from Owner's Property

Transport waste materials removed from demolished and deconstructed structures from Owner's property for legal disposal.

3.6 INSPECTION

On-site coating work as described herein shall be inspected for compliance with this specification by a NACE (National Associate of Corrosion Engineers) Certified Coating Inspector provided by the Contractor.

The Inspector shall be present at the pre-work conference to address necessary clarification of inspection and specification requirements. Apparent deviation from the specified requirements or any out of tolerance condition shall be immediately reported to the Contracting Officer for determination of corrective action. Submit inspection reports performed by the Coating Inspector.

Inspection Forms shall be submitted at the pre-work conference which shall be used by the Coating Inspector and forwarded to the Contracting Officer prior to delivery of the coated work to the job site.

The Inspector shall provide over site during various stages of the preparation and application of the coating for 20% of the total mooring fixtures identified in the contract and shall provide a final inspection on all the mooring fixtures. The duration and scheduling for the inspections shall be determined and agreed upon by all parties during the pre-work conference. Discrepancies noted on the inspection reports shall be repaired by the contractor at no additional cost to the Owner.

-- End of Section --

PART 5

CONSTRUCTION DRAWINGS

~ This page intentionally left blank. ~

BID DOCUMENTS

REPAIRS TO MALLORY SQUARE PIER AND BREASTING DOLPHINS

PREPARED FOR

CITY OF KEY WEST

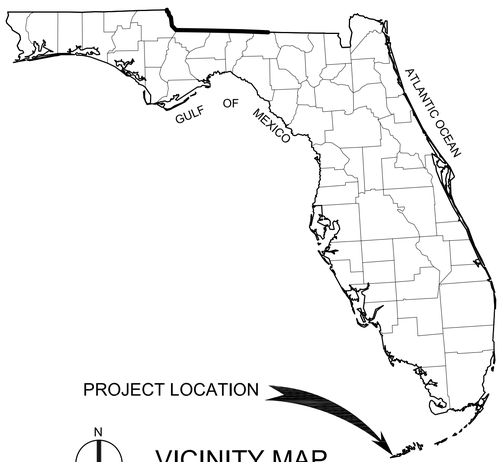

VICINITY MAP

INDEX TO DRAWINGS

GENERAL

G-001	COVER SHEET
G-002	OVERALL PROJECT SITE PLAN

STRUCTURAL

S-001	GENERAL STRUCTURAL NOTES
S-002	OVERALL STRUCTURAL LAYOUT
S-003	PIER REPAIR LOCATION PLAN
S-004	DOLPHINS REPAIR LOCATION PLAN
S-005	CONCRETE REPAIR DETAILS

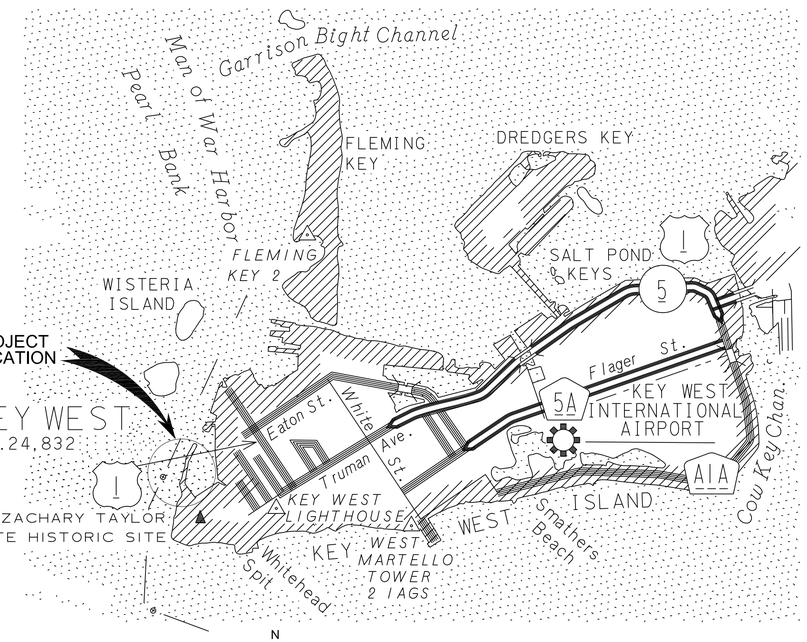

LOCATION MAP

Copyright for this map is registered by the State of Florida, Department of Transportation

For information regarding this project, contact:

SEAN MCCOY
6410 5th Street, Suite 2-A
Key West, FL 33040
305-294-1645

CH2M Hill Project No. 696705

ISSUED FOR REVIEW
NOVEMBER 2017

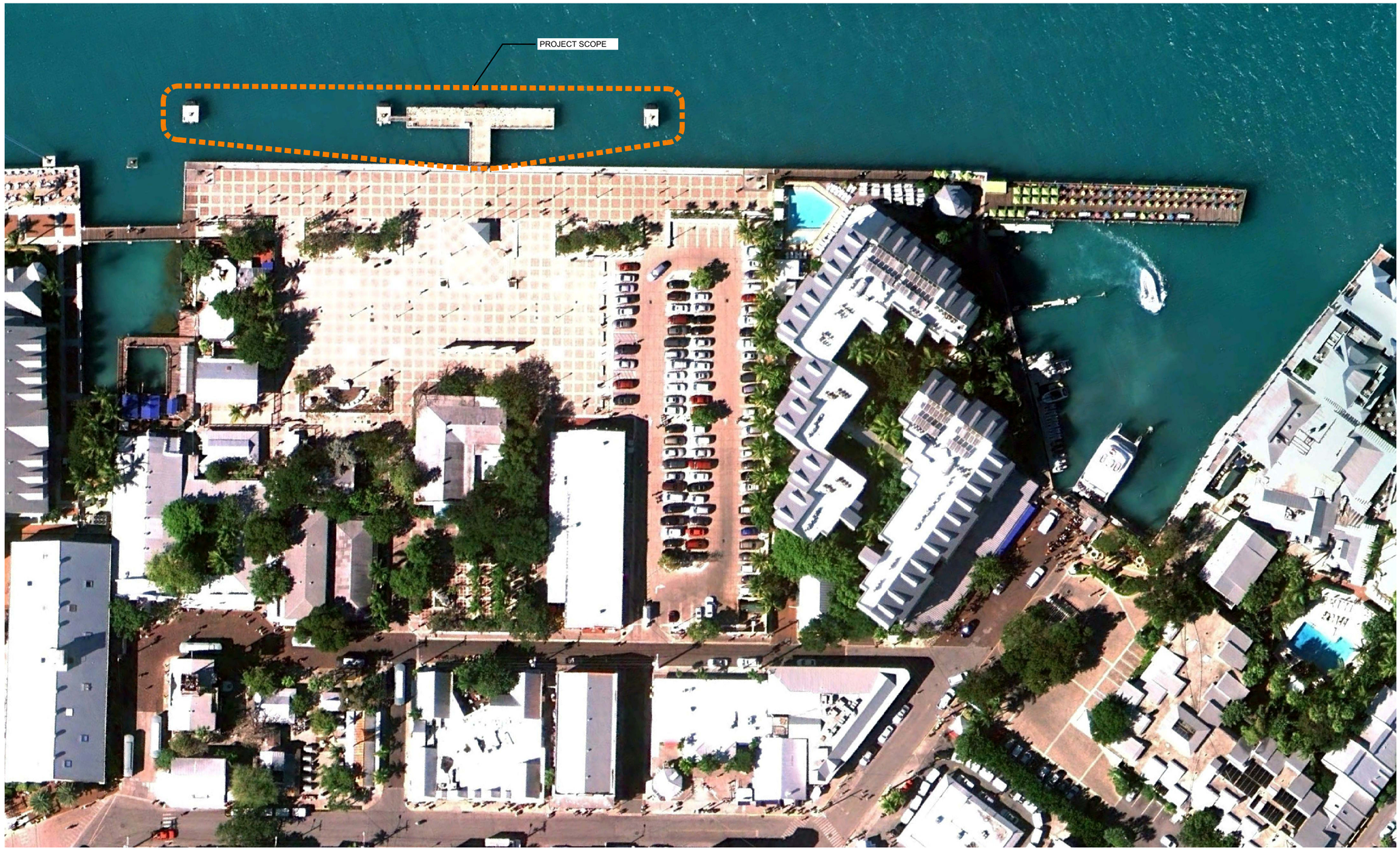

OVERALL PROJECT SITE PLAN

1" = 40'-0"

PROJECT N
TRUE N

0 40' 80' 120'
0 1" 2" 3"
1" = 40'-0"

3001 PGA BLVD. SUITE 300
PALM BEACH GARDENS, FL 33410
EB0000072 · AAC001992

REPAIRS TO MALLORY SQUARE PIER AND BREASTING DOLPHINS
KEY WEST, FLORIDA

NAVAL FACILITIES ENGINEERING COMMAND SOUTH DIVISION - CHARLSTON, SOUTH CAROLINA

GENERAL

OVERALL PROJECT SITE PLAN

NO.	DATE	REVISION	BY	APVD
-	-	-	-	-

DSGN	DR	CHK	APVD
A ARTHAY	T LUEHRS	A ARTHAY	S MC COY

VERIFY SCALE
BAR IS ONE INCH ON ORIGINAL DRAWING.
0 1"

DATE	SEPTEMBER 2017
PROJ	696705
DWG	G-002

BID DOCUMENTS

REUSE OF DOCUMENTS: THIS DOCUMENT, AND THE IDEAS AND DESIGNS INCORPORATED HEREIN, AS AN INSTRUMENT OF PROFESSIONAL SERVICE, IS THE PROPERTY OF CH2M HILL AND IS NOT TO BE USED, IN WHOLE OR IN PART, FOR ANY OTHER PROJECT WITHOUT THE WRITTEN AUTHORIZATION OF CH2MHILL.

©CH2M HILL 2012. ALL RIGHTS RESERVED.

FILENAME: 002_G-002_696705.dwg PLOT DATE: Nov17, 2017 PLOT TIME: 9:47am

DESIGN SPECIFICATIONS AND REFERENCES:

1. FLORIDA BUILDING CODE, 2014 EDITION.

2. AMERICAN INSTITUTE OF STEEL CONSTRUCTION (AISC) "MANUAL OF STEEL CONSTRUCTION, ALLOWABLE STRESS DESIGN." 13th EDITION, 2005.

3. AMERICAN WELDING SOCIETY (AWS), "STRUCTURAL WELDING CODE - STEEL", ANSI/AWS D1.1/D1.1M, 2006.

4. AMERICAN CONCRETE INSTITUTE (ACI) PUBLICATION ACI 318-08 "BUILDING CODE REQUIREMENTS FOR STRUCTURAL CONCRETE" AND ACI 301- 08,"SPECIFICATIONS FOR STRUCTURAL CONCRETE".

5. FLORIDA DEPT OF TRANSPORTATION (FDOT), "STANDARD SPECIFICATIONS FOR ROAD AND BRIDGE CONSTRUCTION", 2010 AND 2017 STANDARD SPECIFICATION EBOOK.

6. AMERICAN ASSOCIATION OF STATE HIGHWAY TRANSPORTATION OFFICIALS (AASHTO) "STANDARD SPECIFICATIONS FOR HIGHWAY BRIDGES." 17th EDITION, 2002.

7. UNIFIED FACILITIES CRITERIA (UFC):
   A. "DESIGN OF PIERS AND WHARVES" : UFC-4-152-01, 2005
   B. "MOORING DESIGN" UFC-4-159-3, 2005
   C. "GENERAL CRITERIA FOR WATERFRONT CONSTRUCTION"; UFC-4-151-10, 2001.

8. WIND LOADS ARE BASED ON THE AMERICAN NATIONAL STANDARDS INSTITUTE (ANSI) /AMERICAN SOCIETY OF CIVIL ENGINEERS (ASCE) PUBLICATION 7-2010 "MINIMUM DESIGN LOADS FOR BUILDING AND OTHER STRUCTURES" AND THE "FLORIDA BUILDING CODE".

PROJECT INFORMATION:

1. VERTICAL AND HORIZONTAL PROJECT CONTROLS:

   A. HORIZONTAL CONTROL BASED ON THE FLORIDA STATE PLAN COORDINATE SYSTEM (NAD83/FL EAST).
   B. BATHYMETRIC DATA IS REFERENCED TO MEAN LOW WATER (MLW) HAVING AN ELEVATION OF (-)0.18 FEET NGVD29.
   C. UPLAND ELEVATIONS ARE REFERENCED TO NGVD29 AND REFERENCED TO BENCHMARK "872 4580 TIDAL 24" (PID #AA0003) WITH ELEVATION 6.391 FEET NGVD29 AND 5.049 FEET NAVD88.
   D. REFERENCE SURVEY LISTED UNDER SECTION 1B ABOVE FOR ALL TOPOGRAPHIC INFORMATION NEEDED.

MATERIALS:

1. ALL CONCRETE SHALL CONTAIN:
   A. PORTLAND CEMENT -ASTM C150- TYPE II.
   B. ASTM C 989 - GROUND GRANULATED BLAST FURNACE SLAG, GRADE 120.
   C. HIGH RANGE WATER REDUCING ADMIXTURE (SUPERPLASTICIZER) AND WATER REDUCING ADMIXTURE.
   D. LOW WATER-TO-CEMENTITIOUS-MATERIALS RATIO - W/CM < 0.40.
   E. LIMIT ON SIZE OF LARGE AGGREGATE - 3/4 INCH MAXIMUM.
   F. ALL CONCRETE SHALL COMPLY WITH ACI 318 - EXPOSURE CLASS C2, FOR SEVERE CORROSION PROTECTION OF REINFORCEMENT.
   G. CALCIUM NITRITE TO BE USED FOR CORROSION INHIBITOR.

2. CAST IN PLACE CONCRETE - 28 DAY STRENGTHS
   A. DOLPHIN CAP - 5,000 psi.

3. REINFORCEMENT:
   A. NEW BILLET REINFORCING STEEL SHALL CONFORM TO ASTM A615, GRADE 60.
   B. STEEL FOR TIGHT RADIUS BENDS AND WELDABILITY SHALL CONFORM TO ASTM A706, GRADE 60.
   C. PRESTRESSING STRANDS SHALL BE ASTM A416, 270 KSI LOW RELAXATION TYPE. ½" SPECIAL.

4. STRUCTURAL STEEL SHAPES AND PLATES SHALL CONFORM TO ASTM A992 OR ASTM A572, WITH A MINIMUM YIELD STRENGTH OF 50 KSI.

5. FENDER MOUNTING HARDWARE, (INCLUDING NUTS, BOLTS, WASHERS, BENT PLATES, ETC.), AND ADHESIVE ANCHOR THREADED RODS EXPOSED TO SALTWATER ENVIRONMENT SHALL BE AISI TYPE 316L STAINLESS STEEL, AS APPLICABLE.

CONCRETE REQUIREMENTS:

1. PROVIDE 4 INCHES OF CONCRETE COVER OVER ALL REINFORCING STEEL.

2. CHAMFER EXPOSED CONCRETE EDGES 1 INCH BY 1 INCH.

3. FOLLOW ACI 301 AND ACI 305 FOR HOT WEATHER CONCRETE WORK.

4. EMBEDDED ITEMS SHALL BE SECURELY MAINTAINED IN POSITION DURING CONCRETE PLACEMENT.

5. NOT MORE THAN ONE- HALF OF THE REINFORCING BARS SHALL BE SPLICED AT ANY ONE LOCATION, WITH ADJACENT SPLICES STAGGERED NOT LESS THAN TWO CLASS "B" LAP SPLICE LENGTHS BETWEEN SPLICES.

6. HOOKS AT THE ENDS OF REINFORCING BARS SHALL BE STANDARD ACI 90, 135 AND 180 DEGREE HOOKS CONFORMING TO ACI 318-08.

7. DO NOT CUT, BEND OR OTHERWISE MODIFY REINFORCING STEEL IN THE FIELD. REINFORCING BARS SHALL NOT BE DISPLACED TO ACCOMMODATE ANCHORS, EMBEDS, OR OTHER ITEMS.

8. ALL REINFORCEMENT SHALL BE 60 KSI CONFORMING TO ASTM A615 OR ASTM A706.

9. SPLICE REINFORCING BARS AS INDICATED. SPLICES NOT SPECIFICALLY DIMENSIONED SHALL BE IN ACCORDANCE WITH ACI 318, SECTION 12.15, CLASS "B", CASE "1" TENSION LAP SPLICES, AS TABULATED BELOW. TOP BARS ARE HORIZONTAL BARS WITH 12 INCHES OR MORE OF FRESH CONCRETE CAST BELOW THE BARS. LAP SPLICE LENGTHS ARE TABULATED FOR UNCOATED REINFORCING BARS. INCREASE TABULATED UNCOATED BAR LAP SPLICE LENGTHS BY 20-PERCENT FOR EPOXY COATED BARS.

CLASS "B" TENSION LAP SPLICES FOR UNCOATED BARS						
BAR SIZE	TOP BARS 4,000 PSI	OTHER BARS 4,000 PSI	TOP BARS 5,000 PSI	OTHER BARS 5,000 PSI	TOP BARS 6,000 PSI	OTHER BARS 6,000 PSI
#3	25"	19"	23"	17"	21"	16"
#4	33"	25"	30"	23"	28"	21"
#5	41"	31"	37"	28"	34"	26"
#6	49"	37"	45"	34"	41"	32"
#7	71"	54"	64"	49"	59"	45"
#8	81"	62"	73"	56"	67"	51"
#9	91"	70"	82"	63"	75"	57"
#10	103"	79"	93"	71"	84"	64"
#11	114"	87"	102"	78"	93"	72"

10. INTENTIONALLY ROUGHEN ALL EXISTING AND HARDENED CONCRETE SURFACES TO RECEIVE FRESH CONCRETE PLACEMENT TO AT LEAST A ¼ INCH AMPLITUDE, AND APPLY AN APPROVED EPOXY BONDING COMPOUND.

11. ALL TIES SHALL BE "CLOSED TIES", FABRICATED WITH 135-DEGREE HOOKS OR TWO PIECE HAIRPIN CLOSED TIES WITH SUFFICIENT TENSION LAP SPLICE LENGTH TO FULLY DEVELOP TO TIE BAR REINFORCEMENT.

WELDING REQUIREMENTS:

1. WELDING SHALL CONFORM TO (AWS) "STRUCTURAL WELDING CODE- STEEL", D1.1 -06.

2. SHOP AND FIELD WELDING SHALL BE PERFORMED BY CERTIFIED AND APPROVED WELDERS, WITH VALID AWS CERTIFICATES OBTAINED WITHIN 12 MONTHS OF REQUIRED WELDING WORK.

3. WELDED CONNECTIONS SHALL BE PRE-QUALIFIED IN ACCORDANCE WITH AWS D1.1.

4. WELDED STEEL CONNECTIONS SHALL BE MADE USING SHIELDED METAL ARC PROCESS, OR APPROVED EQUAL, WITH ELECTRODES CONFORMING TO E70XX.

5. WELDS (SHOP AND FIELD) SHALL BE VISUALLY INSPECTED BY AWS CERTIFIED WELDING INSPECTORS (CWI).

NO.	DATE	REVISION	BY	APVD
-	-	-	-	-

DSGN A ARTHAY | DR T LUEHRS | CHK A ARTHAY | APVD S MC COY

ch2m
3001 PGA BLVD. SUITE 300
PALM BEACH GARDENS, FL 33410
EB0000072 · AAC001992

REPAIRS TO MALLORY SQUARE PIER AND BREASTING DOLPHINS
KEY WEST, FLORIDA
NAVAL FACILITIES ENGINEERING COMMAND
SOUTH DIVISION - CHARLSTON, SOUTH CAROLINA

GENERAL

GENERAL NOTES

REUSE OF DOCUMENTS: THIS DOCUMENT, AND THE IDEAS AND DESIGNS INCORPORATED HEREIN, AS AN INSTRUMENT OF PROFESSIONAL SERVICE, IS THE PROPERTY OF CH2M HILL AND IS NOT TO BE USED, IN WHOLE OR IN PART, FOR ANY OTHER PROJECT WITHOUT THE WRITTEN AUTHORIZATION OF CH2MHILL.

©CH2M HILL 2012. ALL RIGHTS RESERVED.

VERIFY SCALE
BAR IS ONE INCH ON ORIGINAL DRAWING.
0 1"

DATE SEPTEMBER 2017
PROJ 696705
DWG S-001

BID DOCUMENTS

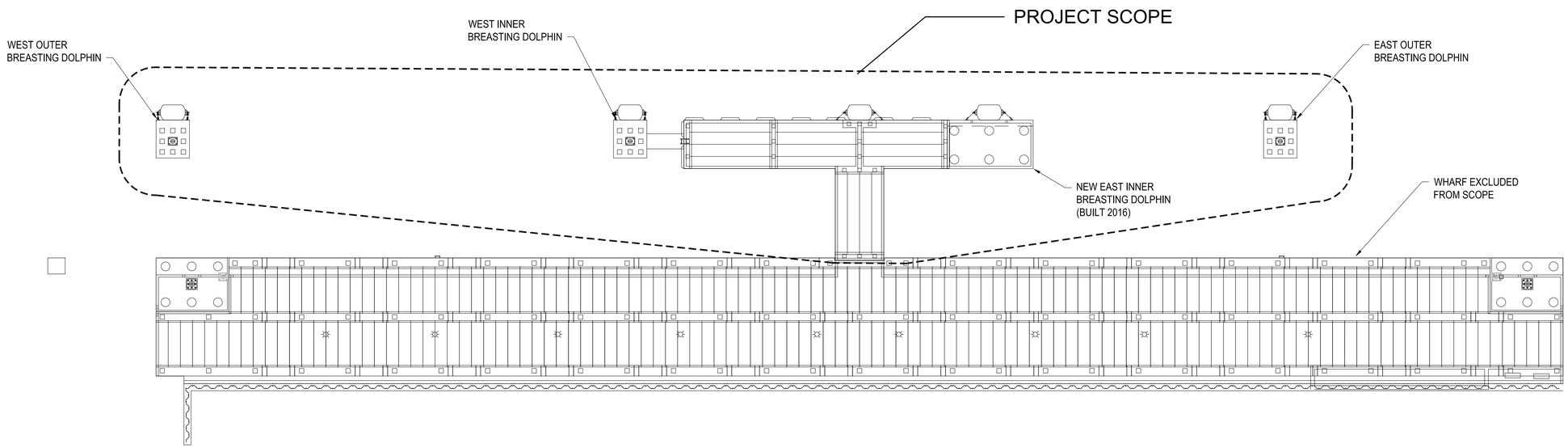

OVERALL SITE PLAN

1" = 20'

PROJECT N
TRUE N

NO.	DATE	REVISION	BY	APVD

DSGN A ARTHAY | DR T LUEHRS | CHK A ARTHAY | APVD S MC COY

3001 PGA BLVD. SUITE 300
PALM BEACH GARDENS, FL 33410
EB0000072 · AAC001992

REPAIRS TO MALLORY SQUARE PIER AND BREASTING DOLPHINS
KEY WEST, FLORIDA
NAVAL FACILITIES ENGINEERING COMMAND SOUTH DIVISION - CHARLSTON, SOUTH CAROLINA

STRUCTURAL

OVERALL STRUCTURAL LAYOUT

REUSE OF DOCUMENTS: THIS DOCUMENT, AND THE IDEAS AND DESIGNS INCORPORATED HEREIN, AS AN INSTRUMENT OF PROFESSIONAL SERVICE, IS THE PROPERTY OF CH2M HILL AND IS NOT TO BE USED, IN WHOLE OR IN PART, FOR ANY OTHER PROJECT WITHOUT THE WRITTEN AUTHORIZATION OF CH2MHILL.

©CH2M HILL 2012. ALL RIGHTS RESERVED.

VERIFY SCALE
BAR IS ONE INCH ON ORIGINAL DRAWING.
0 1"

DATE SEPTEMBER 2017
PROJ 696705
DWG S-002

BID DOCUMENTS

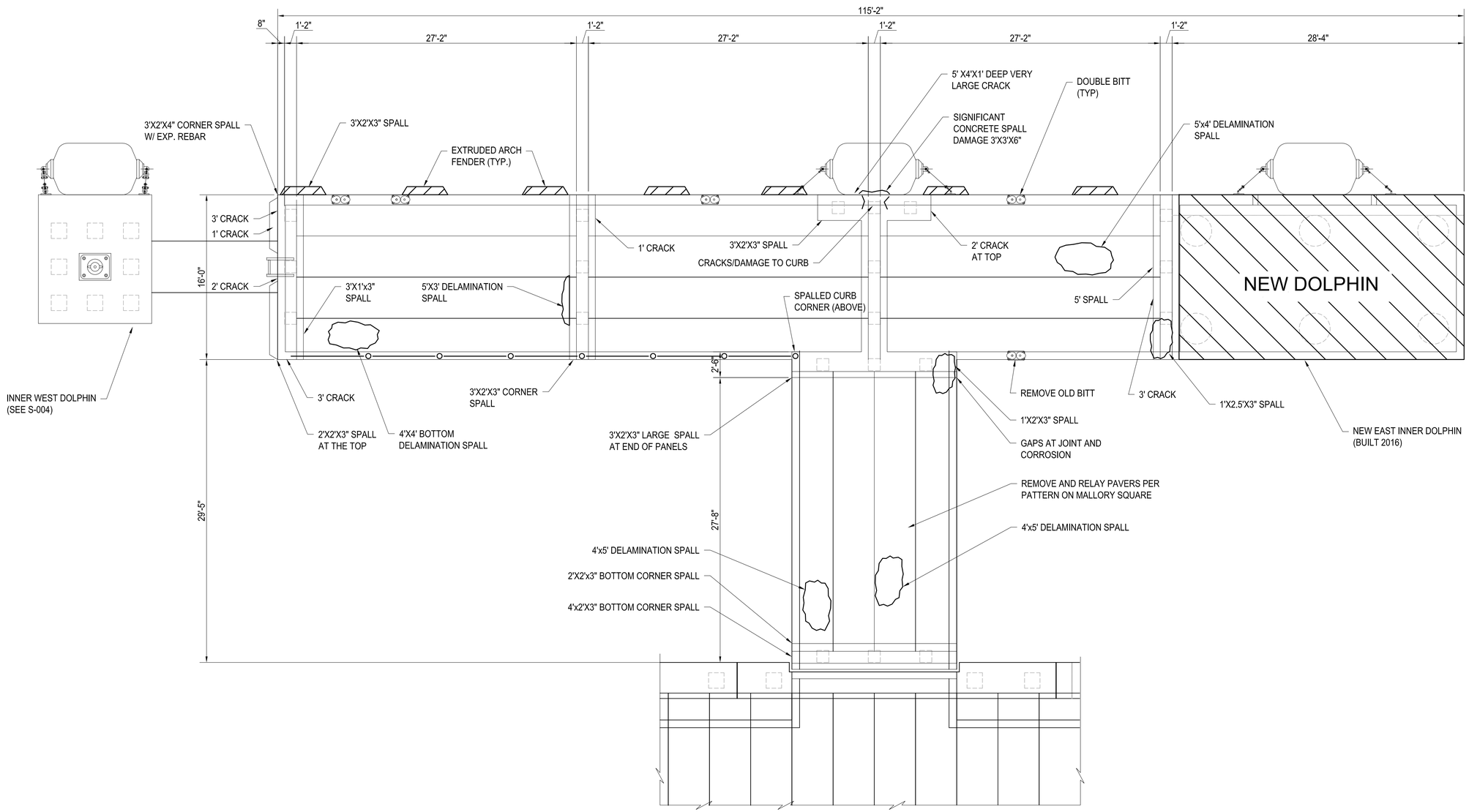

ENLARGED PIER PLAN

3/8"=1'-0"

PROJECT N TRUE N

NOTES:

1. CONCRETE AND REPAIR AND RECONSTRUCTION WORK SHALL BE REPAIRED IN ACCORDANCE WITH CONTRACT DOCUMENTS, NOTE 1, AND DETAILS SHOWN ON DWG S-005.
2. ALL DAMAGE SHOWN IS LOCATED UNDER DECK (UNLESS OTHERWISE NOTED).

0 4' 8' 12'
0 1" 2" 3"
1/4" = 1'-0"

NO.	DATE	REVISION	BY	APVD

DSGN A ARTHAY | DR T LUEHRS | CHK A ARTHAY | APVD S MC COY

ch2m
3001 PGA BLVD. SUITE 300
PALM BEACH GARDENS, FL 33410
EB0000072 · AAC001992

REPAIRS TO MALLORY SQUARE PIER AND BREASTING DOLPHINS
KEY WEST, FLORIDA
NAVAL FACILITIES ENGINEERING COMMAND
SOUTH DIVISION - CHARLSTON, SOUTH CAROLINA

STRUCTURAL

MALLORY SQUARE PIER PIER REPAIR LOCATION PLAN

REUSE OF DOCUMENTS: THIS DOCUMENT, AND THE IDEAS AND DESIGNS INCORPORATED HEREIN, AS AN INSTRUMENT OF PROFESSIONAL SERVICE, IS THE PROPERTY OF CH2M HILL AND IS NOT TO BE USED, IN WHOLE OR IN PART, FOR ANY OTHER PROJECT WITHOUT THE WRITTEN AUTHORIZATION OF CH2MHILL.
©CH2M HILL 2012. ALL RIGHTS RESERVED.

VERIFY SCALE
BAR IS ONE INCH ON ORIGINAL DRAWING.
0 1"

DATE SEPTEMBER 2017
PROJ 696705
DWG S-003

BID DOCUMENTS

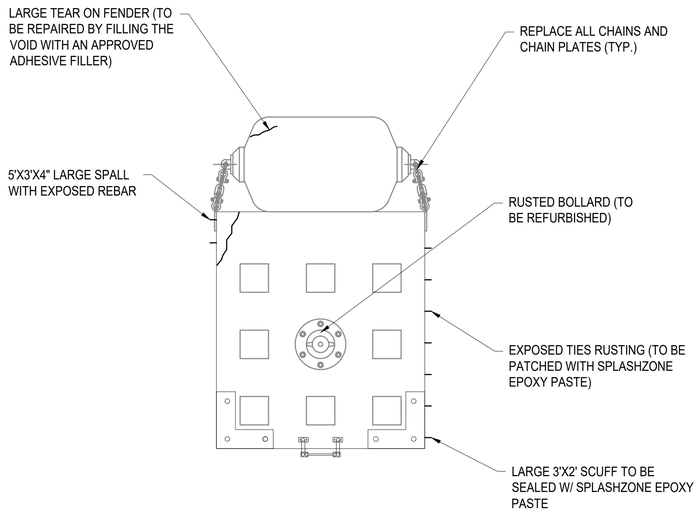

WEST OUTER BREASTING DOLPHIN PLAN

1/4" = 1'-0"

PROJECT N TRUE N

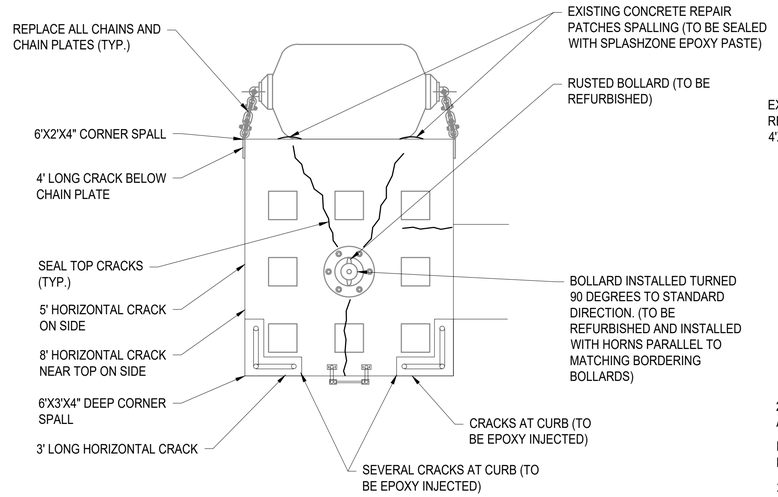

WEST INNER BREASTING DOLPHIN PLAN

1/4" = 1'-0"

PROJECT N TRUE N

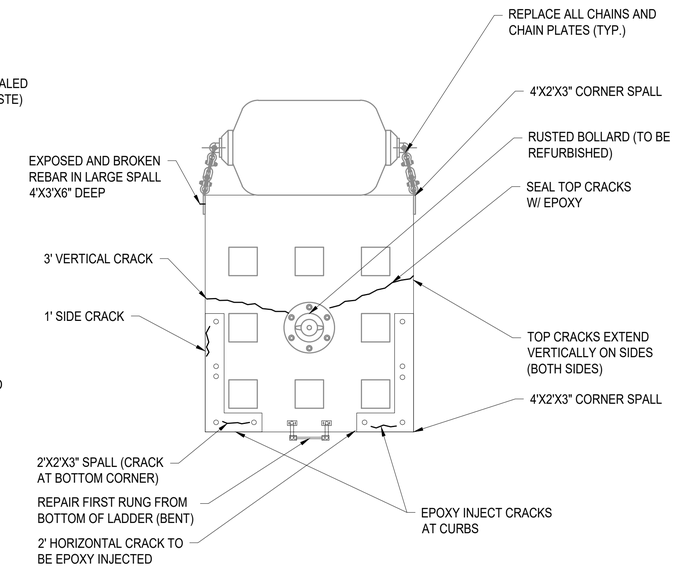

EAST OUTER BREASTING DOLPHIN PLAN

1/4" = 1'-0"

PROJECT N TRUE N

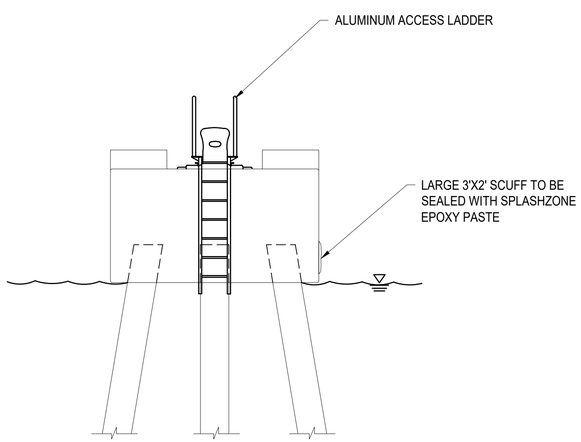

WEST OUTER BREASTING DOLPHIN SOUTH ELEVATION

1/4" = 1'-0"

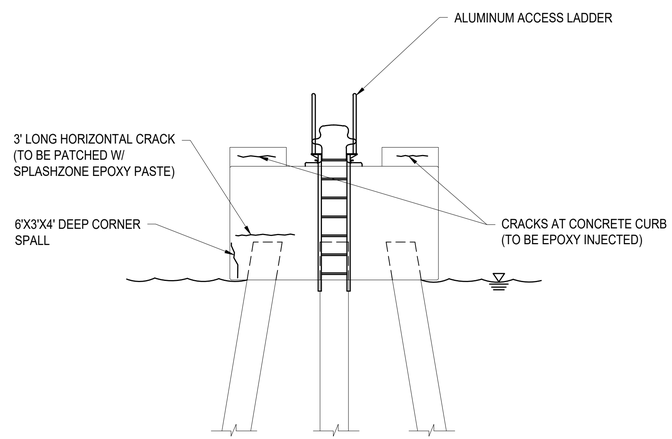

WEST INNER BREASTING DOLPHIN SOUTH ELEVATION

1/4" = 1'-0"

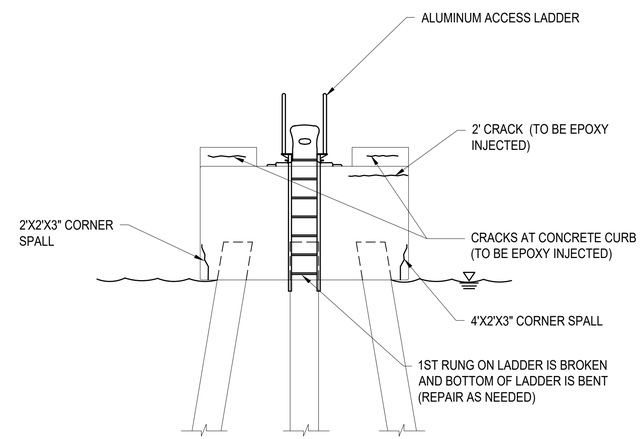

EAST OUTER BREASTING DOLPHIN SOUTH ELEVATION

1/4" = 1'-0"

NOTES:

1. LADDERS AND BOARDING PLATFORMS ARE IN ACCEPTABLE CONDITION (UNLESS NOTED OTHERWISE).
2. BOLLARDS ARE TO BE REMOVED AND SAND BLASTED TO SSPC-SP6 (NACE NO.3) AND THEIR CONDITION EVALUATED, IF SATISFACTORY, THEN RECOATED WITH ZINC-RICH EPOXY AND TWO COATS OF TWO COMPONENT HIGH BOND EPOXY AND A FINAL POLYURETHANE COATING.
3. ALL BOLLARD HARDWARE TO BE REINSTALLED NEW BY CORING HOLES AND EPOXYING NEW BOLTS W/ HILTI HIT RE-500SD W/ 18" EMBEDMENT.
4. NO WORK SHALL BE PERFORMED BELOW MEAN HIGH WATER (MHW).
5. CONTRACTOR SHALL NOT PERMIT ANY ACTIVITY , MATERIALS, DEBRIS, EQUIPMENT, ETC. BELOW MHW.

0 4' 8' 12'
0 1" 2" 3"
1/4" = 1'-0"

NO.	DATE	REVISION	BY	APVD

DSGN A ARTHAY | DR T LUEHRS | CHK A ARTHAY | APVD S MC COY

ch2m
3001 PGA BLVD. SUITE 300
PALM BEACH GARDENS, FL 33410
EB0000072 · AAC001992

REPAIRS TO MALLORY SQUARE PIER AND BREASTING DOLPHINS
KEY WEST, FLORIDA
NAVAL FACILITIES ENGINEERING COMMAND
SOUTH DIVISION - CHARLSTON, SOUTH CAROLINA

STRUCTURAL
MALLORY SQUARE DOLPHINS REPAIR LOCATION PLAN

REUSE OF DOCUMENTS: THIS DOCUMENT, AND THE IDEAS AND DESIGNS INCORPORATED HEREIN, AS AN INSTRUMENT OF PROFESSIONAL SERVICE, IS THE PROPERTY OF CH2M HILL AND IS NOT TO BE USED, IN WHOLE OR IN PART, FOR ANY OTHER PROJECT WITHOUT THE WRITTEN AUTHORIZATION OF CH2MHILL.
© CH2M HILL 2012. ALL RIGHTS RESERVED.

VERIFY SCALE
BAR IS ONE INCH ON ORIGINAL DRAWING.
0 1"

DATE	SEPTEMBER 2017
PROJ	696705
DWG	S-004

BID DOCUMENTS

NOTES

REPAIR SCHEDULES

1. THE SCOPE OF CONCRETE RECONSTRUCTION WORK, INCLUDING, THE NUMBER OF DEFECTS, SAWCUT LIMITS, OR REPAIR QUANTITIES FOR EACH REPAIR SHALL BE INSPECTED AND APPROVED BY A REPRESENTATIVE FROM THE OWNER OR THE ENGINEER. THE ENGINEER SHALL BE NOTIFIED (AND APPROVE) OF ALL ADDITIONAL REPAIRS BEYOND THOSE NOTED IN THE PLANS.

2. PROPOSED REPAIR AREAS AND DEPTHS ARE BASED ON AN INSPECTION PERFORMED IN AUGUST 2017 AND ARE FOR BID PURPOSES ONLY. THE CONTRACTOR SHALL INCLUDE AN ADDITIONAL 20% OF THE TOTAL PROPOSED SPALL REPAIR AREA AND A DEPTH OF 4" INTO THEIR BID. THE CONTRACTOR SHALL ALSO INCLUDE AN ADDITIONAL 20% OF THE TOTAL PROPOSED CRACK REPAIR LENGTH WITH A WIDTH OF 1/32" INTO THEIR BID. A UNIT PRICE SHALL BE PROVIDED FOR THE ADDITIONAL WORK. ALL REPAIRS SHALL BE MEASURED IN THE FIELD AND APPROVED BY THE OWNER REPRESENTATIVE OR THE ENGINEER.

GENERAL CONCRETE RECONSTRUCTION/SPALL REPAIR

3. CONCRETE SURFACE

3.1. SAWCUT THE PERIMETER OF THE AREA BEING REPAIRED TO A MINIMUM DEPTH OF 1" TO PREVENT FEATHEREDGES (A MINIMUM DEPTH OF 2" AT EDGES AND PAVEMENT JOINTS). THE SAWCUT AREA SHALL BE RECTANGULAR IN SHAPE (CORNERS SHOULD BE 90 DEGREES WITH EDGES PARALLEL AND NORMAL TO THE DIRECTION OF THE EXISTING STEEL REINFORCEMENT. THE STEEL REINFORCEMENT SHALL NOT BE DAMAGED.

3.2. MECHANICALLY ABRADE THE SURFACE TO ACHIEVE A MINIMUM SURFACE PROFILE OF 3, CSP-7 IN ACCORDANCE WITH ICRI GUIDELINE 310.2, OR AS SPECIFIED BY THE MANUFACTURER. TAKE ALL PRECAUTIONS NECESSARY TO MINIMIZE MICROCRACKING OR BRUISING OF THE PREPARED CONCRETE SURFACE (REFER TO ICRI GUIDELINE 310.2).

3.3. CONCRETE SURFACE MUST BE FREE OF ALL UNSOUND OR DELAMINATED CONCRETE, OIL, GREASE, LAITANCE, EFFLORESCENCE, DIRT, PROTECTIVE COATINGS, AND ALL OTHER CONTAMINANTS THAT MAY AFFECT THE BOND BETWEEN THE BASE AND REPAIR MATERIAL.

3.4. APPLY FOX FX-764 SPLASHZONE EPOXY PASTE OR APPROVED EQUIVALENT TO ALL SPALLS TO BE REPAIRED IN ACCORDANCE WITH MANUFACTURER'S RECOMMENDATIONS.

3.5. IF A SPALL IS TOO LARGE FOR SPLASHZONE EPOXY AND NEEDS TO BE FORMED UP AND POURED, APPLY AN EPOXY BONDING AGENT SUCH AS SIKADUR 32 HI-MOD OR APPROVED EQUIVALENT PER MANUFACTURER SPECIFICATIONS TO ALL PREPARED SURFACES PRIOR TO POURING NEW CONCRETE.

4. STEEL REINFORCING

4.1. IF EXISTING STEEL REINFORCEMENT IS EXPOSED, ALL CONCRETE THAT MAY COMPRISE THE BOND BETWEEN THE STEEL REINFORCEMENT AND CONCRETE SHALL BE REMOVED. CONCRETE REMOVAL SHALL EXTEND 10d BEYOND THE LIMITS OF STEEL CORROSION. SUBSEQUENTLY, ANY PORTION OF THE STEEL REINFORCEMENT WITH MORE THAN HALF OF ITS PERIMETER EXPOSED FOR AS MUCH AS 12 INCHES, OR THAT HAS SCALING OR PITTING, REGARDLESS OF EXPOSED LENGTH, SHALL BE COMPLETELY EXPOSED FOR A MINIMUM CLEARANCE OF 1" OR THE NOMINAL MAXIMUM AGGREGATE SIZE PLUS 1/4 INCH (WHICHEVER IS GREATER).

4.2. IF THE CROSS-SECTIONAL AREA OF THE STEEL REINFORCEMENT HAS BEEN REDUCED BY 25 PERCENT OR MORE OR IF TWO ADJACENT BARS HAVE BEEN REDUCED BY 20 PERCENT OR MORE, THE STEEL REINFORCEMENT SHALL BE REPLACED UTILIZING STANDARD SPLICE LENGTH OR WELDING OF STEEL REINFORCING.

4.3. EXPOSED STEEL REINFORCEMENT SHALL BE ABRASIVE BLASTED OR MECHANICALLY CLEANED TO BARE METAL. FINISHED SURFACE SHALL BE FREE OF DIRT, SURFACE RESIDUES, AND ALL OTHER CONTAMINANTS THAT MAY AFFECT THE BOND TO THE REPAIR MATERIAL.

4.4. EXPOSED STEEL REINFORCEMENT SHALL BE COATED WITH SIKA ARMATEC 110 EPO CEM OR APPROVED EQUIVALENT PER MANUFACTURER'S INSTRUCTIONS AFTER BEING CLEANED UP.

4.5 SPLICES, HOOKS AND BENDS SHALL CONFORM TO THE LATEST EDITION OF ACI-318. ALL BENDS AND HOOKS SHALL BE ACI-318 STANDARD 90° AND 180° HOOKS UNLESS NOTED OTHERWISE.

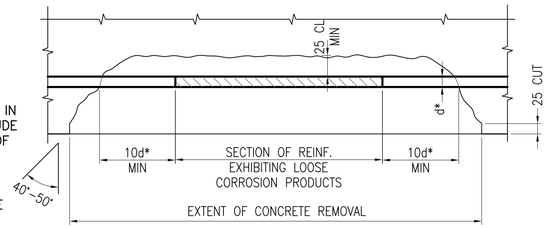

NOTE: * d=REINF DIAMETER

CONCRETE REMOVAL AT CORRODED MAIN REINFORCING

N.T.S.

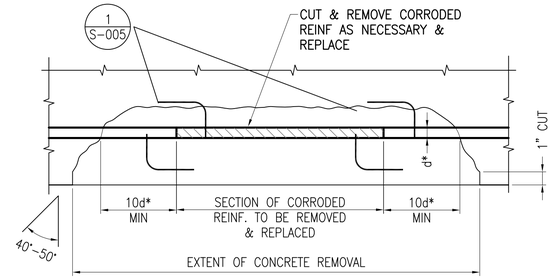

NOTE: * d=REINF DIAMETER

REINFORCING WELDING DETAIL

N.T.S.

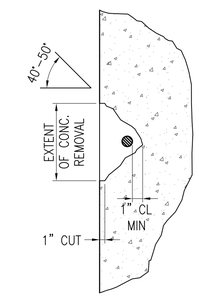

SECTION A

N.T.S. SB-010

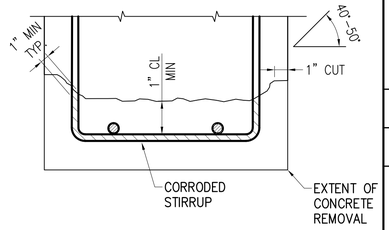

SECTION B

N.T.S. SB-010

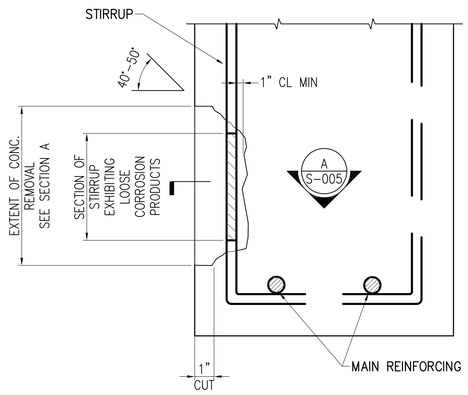

CONCRETE REMOVAL AT CORRODED TIE

N.T.S

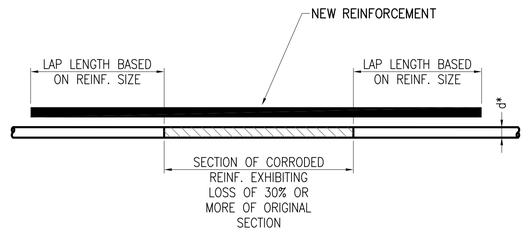

LAP SPLICING OF NEW REINFORCEMENT

N.T.S.

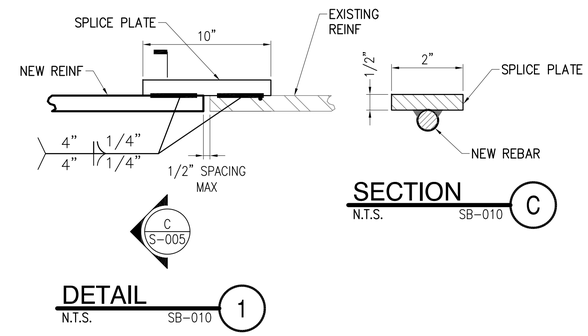

DETAIL 1

N.T.S. SB-010

SECTION C

N.T.S. SB-010

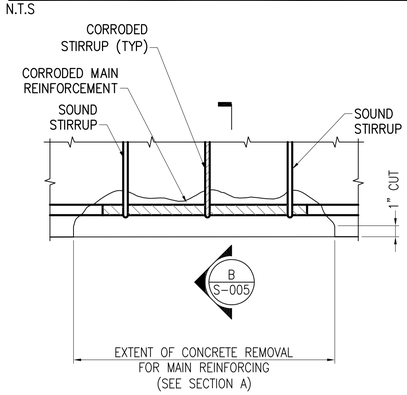

CONCRETE REMOVAL AT CORRODED MAIN REINFORCING WITH STIRRUP

N.T.S.

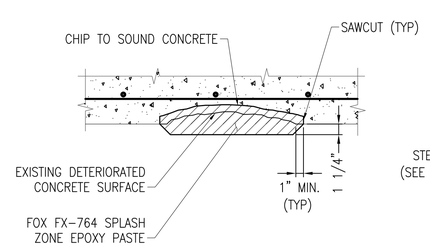

SPALL REPAIR NO STEEL REINFORCING EXPOSED

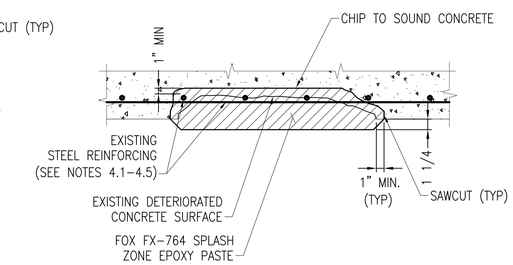

SPALL REPAIR STEEL REINFORCING EXPOSED

TYPICAL CONCRETE REPAIR DETAILS

SCALE: 1:10

WIDTH AND DEPTH OF V-GROOVING		
WIDTH OF CRACKS	WIDTH OF V-GROOVING (A)	DEPTH OF V-GROOVING (B)
LESS THAN 0.01"	1/4"	1/2"
FROM 0.01" TO 1/8"	1/2"	1"
MORE THAN 1/8"	1"	1 1/2"

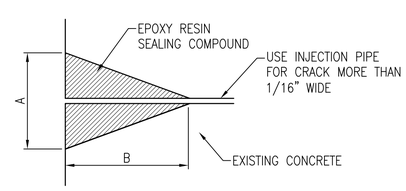

TYPICAL CRACK REPAIR

ANTONIO ARTHAY
FL PE No. 57912

NO.	DATE	REVISION	BY	APVD

DSGN	DR	CHK	APVD
A ARTHAY	T LUEHRS	A ARTHAY	S MC COY

©CH2M HILL 2012. ALL RIGHTS RESERVED.

REUSE OF DOCUMENTS: THIS DOCUMENT, AND THE IDEAS AND DESIGNS INCORPORATED HEREIN, AS AN INSTRUMENT OF PROFESSIONAL SERVICE, IS THE PROPERTY OF CH2M HILL AND IS NOT TO BE USED, IN WHOLE OR IN PART, FOR ANY OTHER PROJECT WITHOUT WRITTEN AUTHORIZATION OF CH2M HILL.

3001 PGA BLVD, SUITE 300
PALM BEACH GARDENS, FL 33410
EB0000072 · AAC001992

REPAIRS TO MALLORY SQUARE PIER AND BREASTING DOLPHINS
KEY WEST, FLORIDA

NAVAL FACILITIES ENGINEERING COMMAND
SOUTH DIVISION - CHARLSTON, SOUTH CAROLINA

STRUCTURAL

MALLORY SQUARE DOLPHINS CONCRETE REPAIR DETAILS

VERIFY SCALE
BAR IS ONE INCH ON ORIGINAL DRAWING.
0 1"

DATE	SEPTEMBER 2017
PROJ	696705
DWG	S-005

BID DOCUMENTS

PART 6

SCHEDULE OF VALUES

18-113A

Mallory Sq. Pier Dolphin Repair & Fender

BID PROPOSAL

Jorge Abisambra

04/27/2018 10:24 AM

Biditem	Description	Quantity	Units	Unit Price	Bid Total
	MALLORY SQUARE				
	PIER & DOLPHIN REPAIRS				
110	MOBILIZATION / DEMOBILIZATION DIVERS	1.000	EA		
130	ENVIRONMENTAL PROTECTION BMP	1.000	EA		
150	PAYMENT & PERFORMANCE BOND	1.000	LS		
	*****Subtotal Mob/Demob/Environmental**				
	PIER & DOLPHIN CRACK REPAIRS				
210	Pier Crack Repairs	19.000	CF		
220	Dolphin Crack Repairs	33.000	CF		
230	New Chain & Plates Furnished & Installation	3.000	EA		
240	New Fender Supply & Install	1.000	EA		
	*****Subtotal**				
	PIER & DOLPHIN DELAMINATION				
760	Pier Delamination	91.000	SF		
770	Dolphin Delamination	0.000		0.00	
	*****Subtotal**				
	PIER & DOLPHIN SPALL REPAIRS				
1010	Pier Spall Repairs	60.000	SF		
1020	Dophin Spall Repairs	56.000	SF		
	*****Subtotal**				
	BOLLARD REFURBISHING				
1110	Bollard Refurbishing (sandblast & recoat)	3.000	EA		
	Total Construction Repairs				
1210	Project Contingency Approx.10%	1.000	LS		
	Bid Total				

Bidder responsible to confirm all quantities prior to bid submittal.