REVISIONS:	DATE
#1	12-29-2016
#2	5-24-2017
#3	8-04-2017

REVISION LOG.

ARCHITECTURAL

SHEET #	REVISION #
A-1	1
A-2	1
A-3	1
A-4	
A-5	
A-6	
A-7	
A-8	
A-9	
A-10	
A-11	
A-12	
A-13	
A-14	
A-15	
A-16	
A-17	
A-18	
A-19	
A-20	

STRUCTURAL

SHEET #	REVISION #
S-1	
S-2	
S-3	
S-4	
S-5	
S-6	
S-7	
S-8	
S-9	
S-10	
S-11	

MECHANICAL

SHEET #	REVISION #
P-1	
P-2	
P-3	
P-4	
P-5	
M-1	
M-2	
M-3	

ELECTRICAL

SHEET #	REVISION #
E-1	
E-2	
E-3	
E-4	
E-5	
E-6	
E-7	
E-8	
E-9	
E-10	

SCHEDULE OF DRAWINGS

ARCHITECTURAL

SHEET #	TITLE
A-1	SITE PLAN / PROJECT NOTES PROJECT CALCS.
A-2	FULL DOCK EXTENSION PLAN & ELEVATIONS
A-3	DOCK EXTENSION PLAN S& ELEVATIONS
A-4	FRAMING PLAN & ADA DETAILS
A-5	DOCK ELECTRICAL PLAN
A-6	ENVIORMENTAL NOTES / GENERAL SPECS.

STRUCTURAL

SHEET #	
S-1	DRAWING INDEX GENERAL NOTES
S-2	SITE PLAN
S-3	PILE LAYOUT AND BENT FRAMING PLAN
S-4	PS SLAB FRAMING PLAN AND DETAILS
S-5	GENERAL SECTIONS
S-6	SECTIONS AND DETAILS
S-7	TYPICAL PILE CAP REINFORCING
S-8	GRID 12 PILE CAP REINFORCING
S-9	GRID 16 PILE CAP REINFORCING
S-10	PRESTRESSED BEAMS REINFORCEMENT (N.I.)
S-11	WOOD FENDER PILES AND DOLPHINS

MECHANICAL

SHEET #	

ELECTRICAL

SHEET #	
E-1	ELECTRICAL PLAN
E-2	SCHEDULES & RISER DIAGRAMS

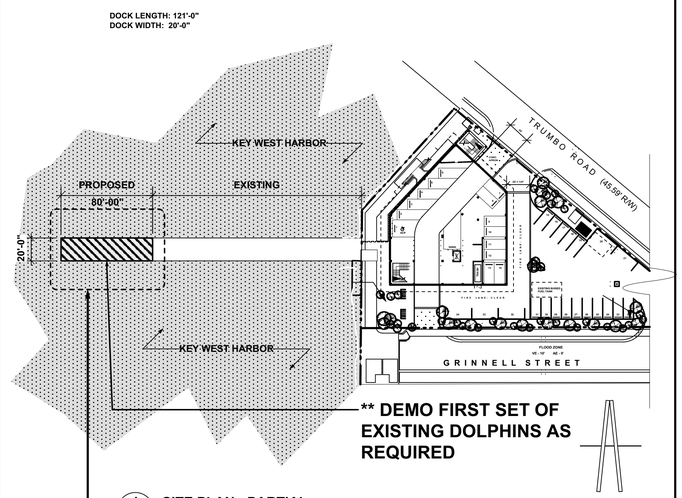

1 / A-1 SITE PLAN - PARTIAL
Scale: 1:750

SCOPE OF WORK:

CONSTRUCT 20'W X 80L' CONCRETE EXTENSION OF EXISTING DOCK FOR FERRY PASSENGER EMBARKMENT & DISEMBARKMENT

NEW EMBARKMENT / DISSEMBARKMENT RAMP EXTENSION

KEY WEST BIGHT FERRY TERMINAL

100 GRINNELL STREET
KEY WEST, FLORIDA

ARCHITECT : PIKE ARCHITECTS
471 U.S. HWY. 1, SUITE 101, KEY WEST
FLORIDA 305-296-1692

STRUCTURAL ENGINEERING : M. CORDERO & ASSOCIATES CA 6278
MARCO A. CORDERO: LIC. # 038586
1227 LAKE MIRIAM DRIVE, LAKELAND, FLA. 33813 863-646-6277

CERTIFICATE OF COMPLIANCE

THIS IS TO CERTIFY THAT I AM A DULY QUALIFIED ARCITECT LICENSED TO PRACTICE IN THE STATE OF FLORIDA. IT IS FURTHER CERTIFIED THAT I HAVE REVIEWED THE DESIGN, SPECIFICATIONS AND PLANS FOR THE COMMERCIAL STRUCTURE PROPOSED FOR CONSTRUCTION AT 100 GRINNELL STREET, KEY WEST FLORIDA, AND IS IN COMPLIANCE WITH THE ORDINANCE ADOPTED BY THE CITY OF KEY WEST, MONROE COUNTY NO. 87-17 REGARDING COASTAL CONSTRUCTION REQUIREMENTS IN THE CITY OF KEY WEST, IN THAT THE STRUCTURE IS DESIGNED ON ADEQUATELY ANCHORED PILINGS OR COLUMNS AND IS SECURELY ANCHORED TO SAME IN ORDER TO WITHSTAND VELOCITY WATERS AND HURICANE WAVE WASH ASSOCIATED WITH THE BASE FLOOD FLOW.
LOWEST FINISHED FLOOD ELEVATION- VE 10' N.G.V.D.

SEAL

DATE_____

SIGNATURE _____

LEGAL DESCRIPTION: RE: -

A parcel of Submerged land lying and being in Section 31, Township 68 South Range 25 East, Island of Key West, Monroe County, Florida, and a part of Key West Bight and being more particularly described as follows: Commencing at the intersection of the Northwesterly Right-of-Way Line of Caroline Street and the Southwesterly Right-of-Way Line of Grinnell Street; thence N.33°58'50"W., along the said Southwesterly Right-of-Way Line of William Street a distance of 351.85 feet to the seaward face of a concrete seawall lying on the Key West Bight and the Point of Beginning; thence continue N 33°58'50" W along the Northerly extension of the Southwesterly Right-of-Way Line of Grinnel Street for 431.59 feet to the federally Maintained Shipping Channel Line; thence S 86°27'30" E and along the said Federally Maintained Shipping Channel Line for a distance of 439.01 feet; thence N 05°58'10" E for 156.10 feet; thence N 84° 01'50" W for 40.00 feet; thence N 05°58'10" E for 145.04 feet; thence S 82°58'21" E for 106.23 feet to the Approximate Mean High Water line (Elev. 0.92 N.G.V.D., 1929); thence meander the said Mean High Water Line in a Southerly direction for 558.2 feet, more or less to the face a Concrete Seawall; thence N 81°29'40" W along the said concrete seawall for a distance of 112.13 feet, more or less; thence S 56°50'27" W and continuing along the face of the concrete seawall for 151.65 feet to the Point of Beginning.
Parcel contains 134125 square feet or 3.08 acres, more or less.

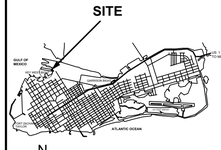

LOCATION MAP

PROJECT APPROVALS:

ITEM	APPROVAL #	DATE
DEVELOPMENT REVIEW COMMITEE	-	-
H.A.R.C.	-	-
BOARD OF ADJUSTMENT	-	-
CITY OF KEY WEST DEVELOPEMENT AGREEMENT	-	-
KEY WEST BIGHT BOARD	-	-

NOTES:

ALL DRAWINGS, SPECIFICATIONS AND RELATED DOCUMENTS ARE THE COPYRIGHT PROPERTY OF THE ARCHITECT/ENGINEER AND MUST BE RETURNED ON REQUEST.
DRAWINGS, SPECIFICATIONS AND RELATED DOCUMENTS ARE FOR USE ON THIS PROJECT ONLY AND USE OR REPRODUCTION OF A PART OR WHOLE IS FORBIDDEN WITHOUT THE ARCHITECTS/ENGINEER WRITTEN PERMISSION
THIS DRAWING IS NOT TO BE USED FOR CONSTRUCTION UNTIL SEALED AND SIGNED BY THE ARCHITECT/ENGINEER

DESIGN NOTES:

THIS STRUCTURE DESIGNED TO MEET THE FOLLOWING
FBC 2014
A.S.C.E. 24-05 REGULATIONS
LIVE LOAD SEE STRUCTURALS
WIND LOAD SEE STRUCTURALS

STATE OF FLORIDA
PETER M. PIKE
REGISTERED ARCHITECT
ARCHITECT

ARCHITECT SEALED AND SIGNED
PETER PIKE
5/24/17

PIKE ARCHITECTS
- ARCHITECTS
- PLANNERS
- CONSULTANTS

471 US HIGHWAY #1
SUITE 101
KEY WEST, FLA. 33040
305-296-1692

This drawing is the property of PETER PIKE ARCHITECTS. The reproduction, copying or other use of this drawing without the written consent of PETER PIKE ARCHITECTS is prohibited and subject to civil and criminal sanctions.
© Copyright 2016

For Permitting Only Not For Construction

PROJECT: EXTENDED NEW EMBARKMENT / DISSEMBARKMENT RAMP KEY WEST BIGHT FERRY TERMINAL

DRAWING TITLE: SITE PLAN / PROJECT NOTES PROJECT CALCS.

PROJECT NUMBER: 16.23
DRAWN: KM/TSN
CHECKED: PMP
DATE: 09-19-2016

SHEET #
A-1
OF 6

PETER M. PIKE FLA. REGISTRATION # AR0015198

SEE STRUCTURAL DRAWINGS

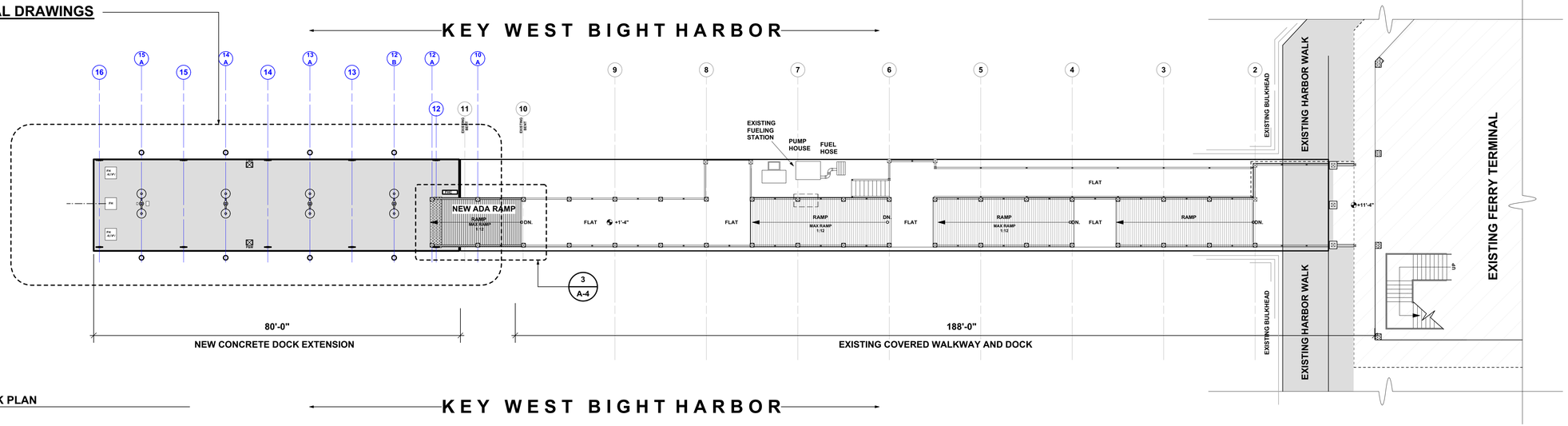

1 A-2 FULL DOCK PLAN
Scale: 1:150

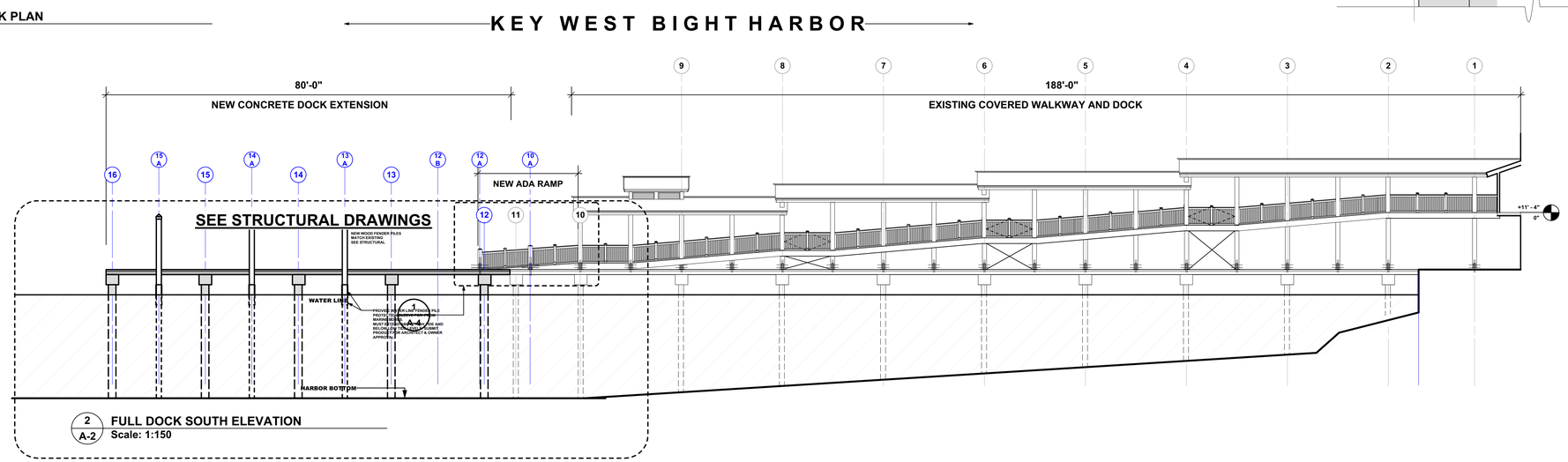

2 A-2 FULL DOCK SOUTH ELEVATION
Scale: 1:150

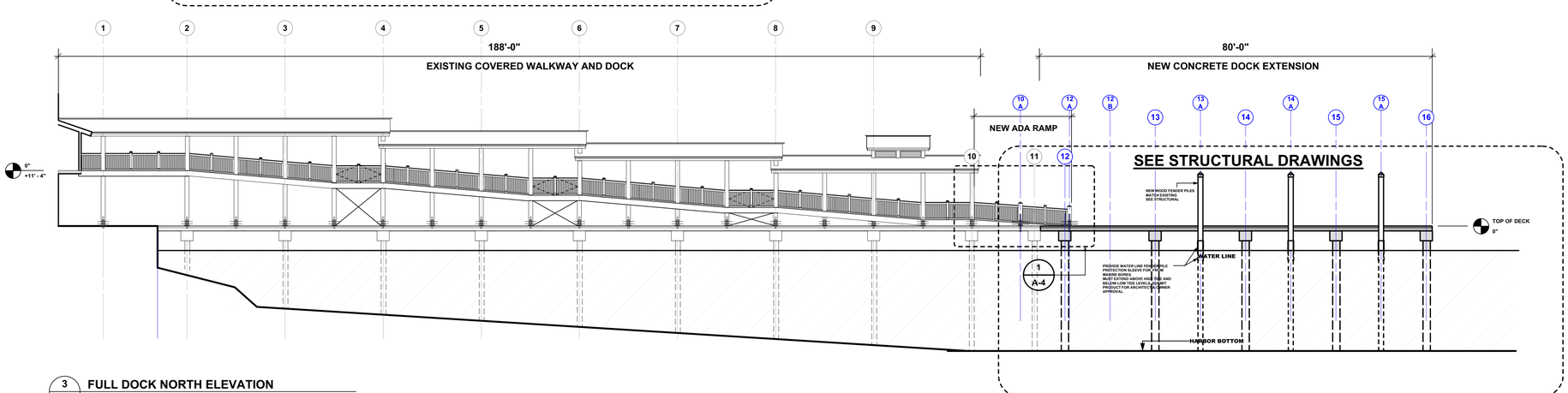

3 A-2 FULL DOCK NORTH ELEVATION
Scale: 1:150

REVISIONS:	DATE
#1	12-29-2016
#2	5-24-2017
#3	8-04-2017

PIKE ARCHITECTS
• ARCHITECTS
• PLANNERS
• CONSULTANTS
471 US HIGHWAY #1
SUITE 101
KEY WEST, FLA. 33040
305-296-1692

This drawing is the property of PIKE ARCHITECTS and may not be used or reproduced without written permission. Any modifications to this drawing invalidates the seal and the liability for the design is transferred to the party who made the modifications. © Copyright 2016

For Permitting Only Not For Construction

PROJECT:
EXTENDED
NEW EMBARKMENT / DISSEMBARKMENT
KEY WEST BIGHT
FERRY TERMINAL

DRAWING TITLE:
FULL DOCK EXTENSION
PLAN & ELEVATION

PROJECT NUMBER: 16.23
DRAWN: KM/TSN
CHECKED: PMP
DATE: 09-19-2016

STATE OF FLORIDA PETER M. PIKE ARCHITECT REGISTERED ARCHITECT
8/24/17

SHEET #
A-2
OF 6

PETER M. PIKE FLA. REGISTRATION # AR0015198

REVISIONS:	DATE
#1	12-29-2016
#2	5-24-2017
#3	8-04-2017

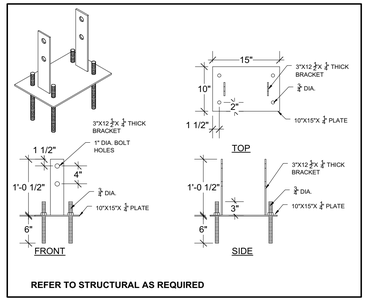

3 / A-3 S.S. BASE ANCHOR DETAIL
Scale: 3/4" = 1'-0"

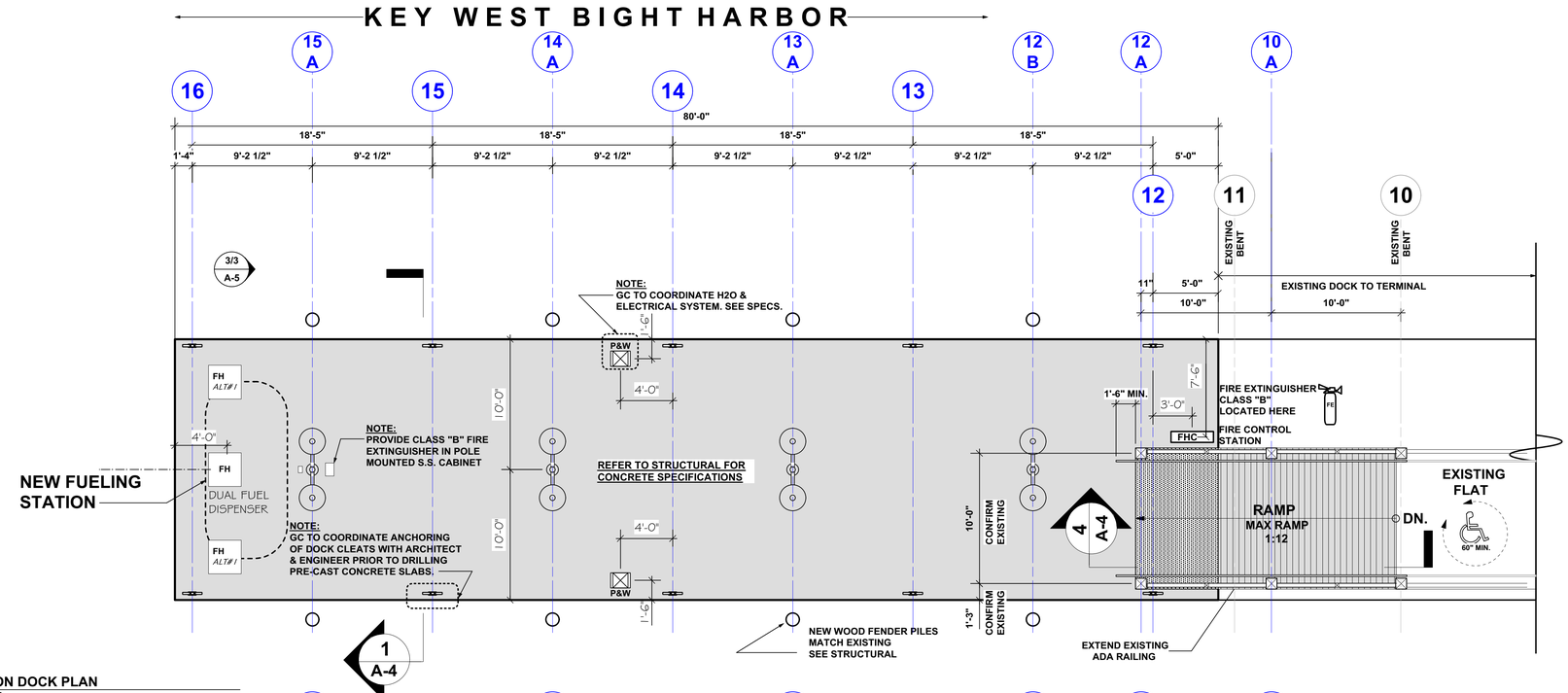

1 / A-3 EXTENSION DOCK PLAN
3/16" = 1'-0"

PENETRATION NOTE:
COORDINATE ALL PENETRATION SIZES & LOCATIONS WITH PRECAST PANEL MANUFACTURER.
TYPICAL AT ALL PANELS.
PROVIDE SHOP DRAWINGS FOR ENGINEER APPROVAL.

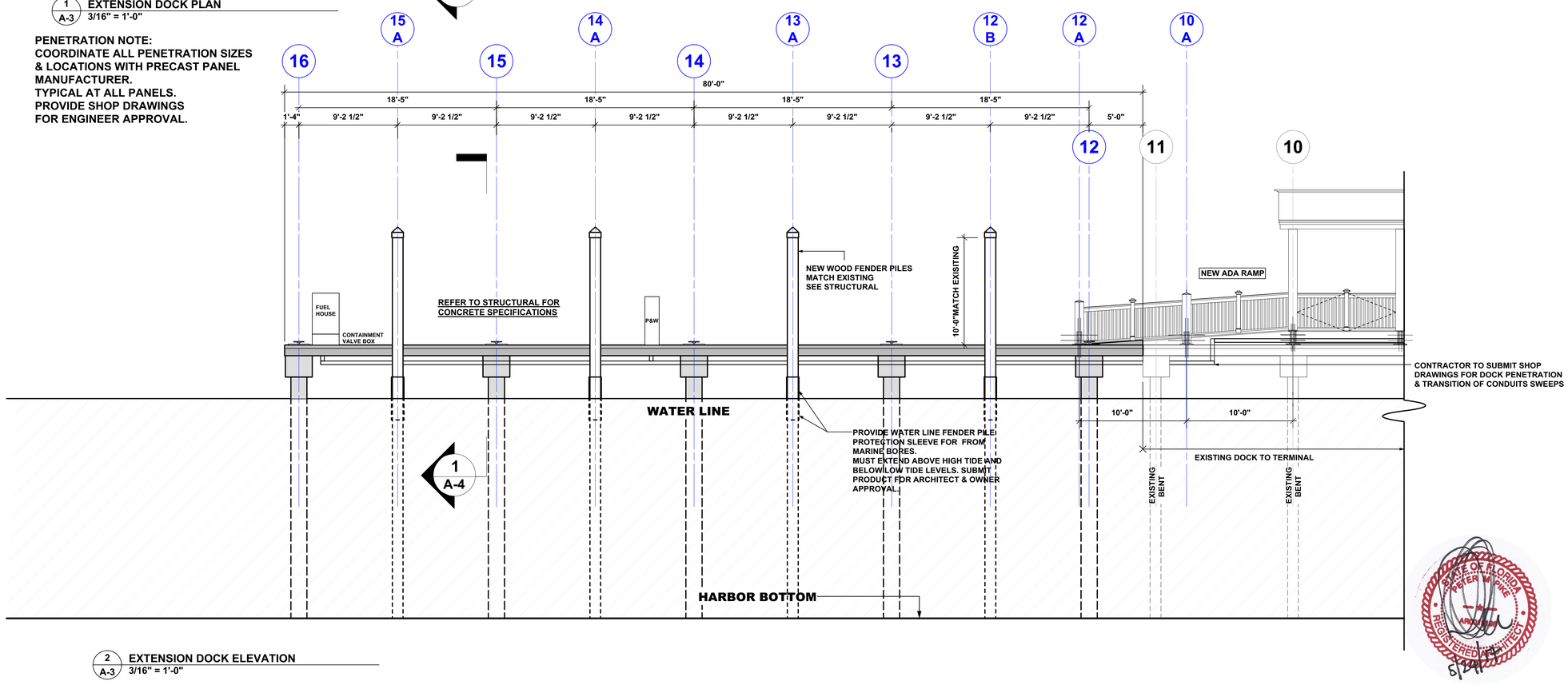

2 / A-3 EXTENSION DOCK ELEVATION
3/16" = 1'-0"

PIKE ARCHITECTS
• ARCHITECTS
• PLANNERS
• CONSULTANTS
471 US HIGHWAY #1
SUITE 101
KEY WEST, FLA. 33040
305-296-1692

This drawing is the property of PETER PIKE ARCHITECT. Reproduction or publication by any method or process is prohibited. Any violation will be prosecuted to the fullest extent of the law. Copyright 2016

For Permitting Only Not For Construction

PROJECT:
EXTENDED
NEW EMBARKMENT / DISSEMBARKMENT RAMP
KEY WEST BIGHT
FERRY TERMINAL

DRAWING TITLE:
DOCK EXTENSION
PLAN & ELEVATION

PROJECT NUMBER: 16.23
DRAWN: KM/TSN
CHECKED: PMP
DATE: 09-19-2016

STATE OF FLORIDA PETER M. PIKE ARCHITECT REGISTERED
5/24/17

SHEET #
A-3
OF 6

PETER M. PIKE FLA. REGISTRATION # AR0015198

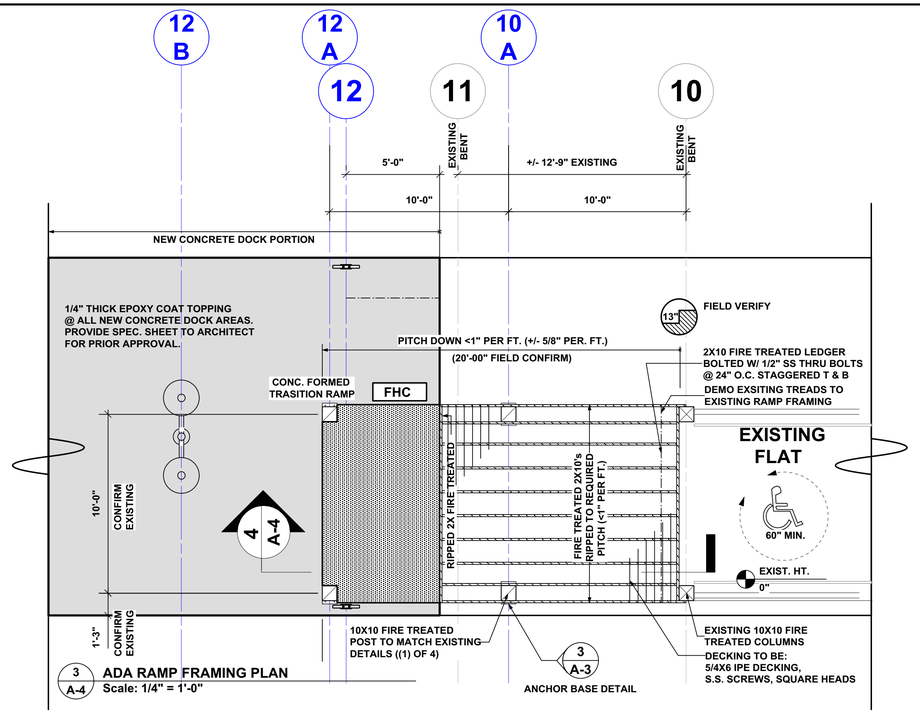

3 / A-4 **ADA RAMP FRAMING PLAN**
Scale: 1/4" = 1'-0"

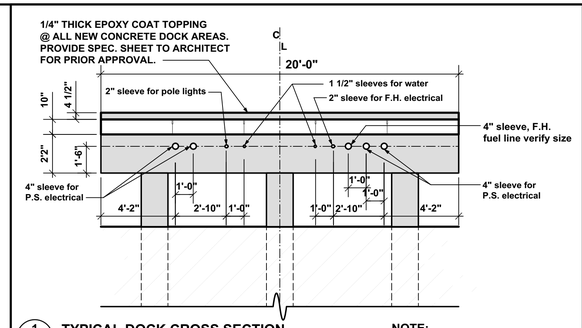

1 / A-4 **TYPICAL DOCK CROSS SECTION**
Scale: 1/4" = 1'-0"

NOTE:
CONTRACTOR TO VERIFY ALL SLEEVE SIZES PRIOR TO WORK

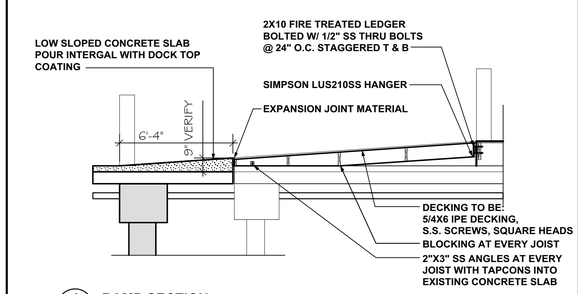

4 / A-4 **RAMP SECTION**
Scale: 1/4" = 1'-0"

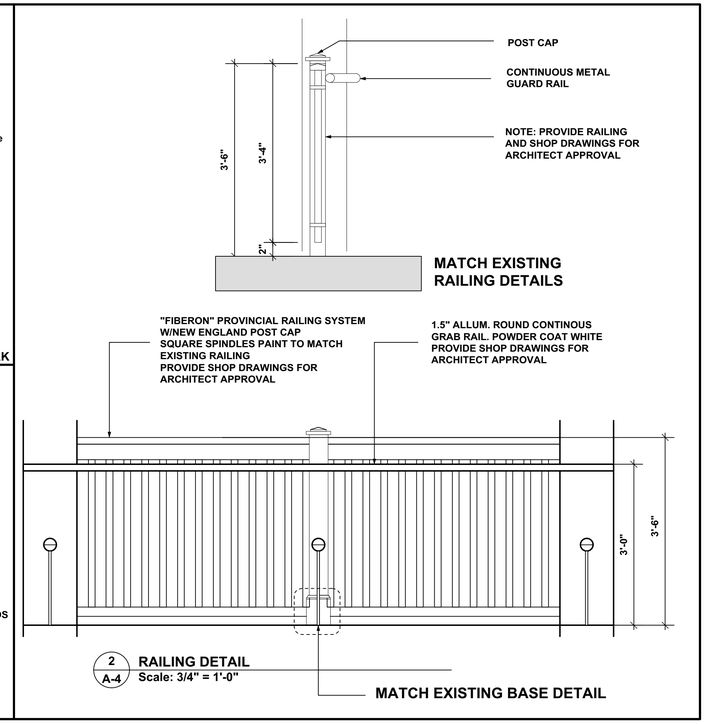

2 / A-4 **RAILING DETAIL**
Scale: 3/4" = 1'-0"

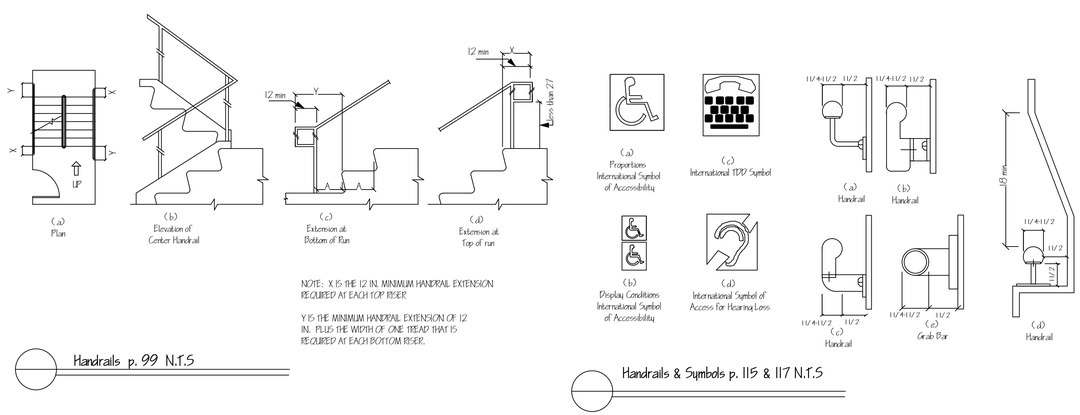

NOTE: X IS THE 12 IN. MINIMUM HANDRAIL EXTENSION REQUIRED AT EACH TOP RISER.

Y IS THE MINIMUM HANDRAIL EXTENSION OF 12 IN. PLUS THE WIDTH OF ONE TREAD THAT IS REQUIRED AT EACH BOTTOM RISER.

Handrails p. 99 N.T.S

Handrails & Symbols p. 115 & 117 N.T.S

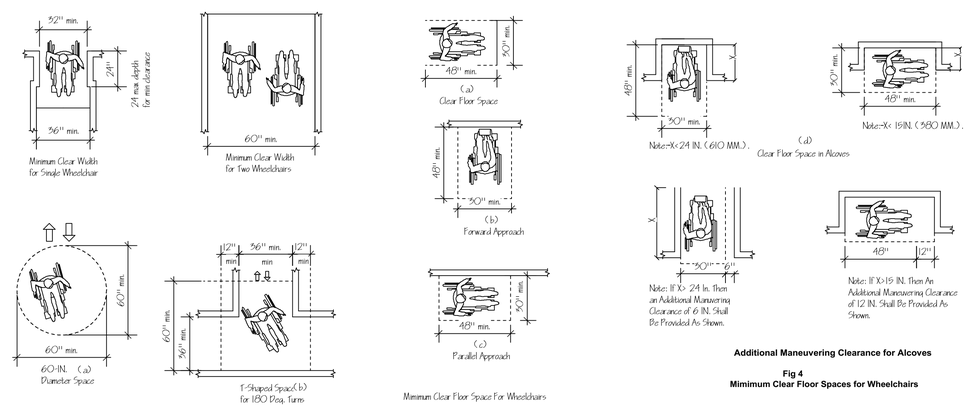

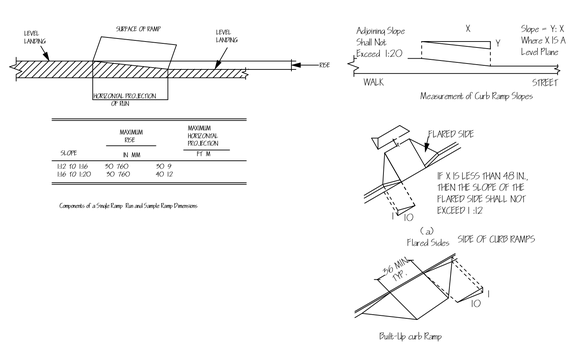

SLOPE	MAXIMUM RISE IN MM	MAXIMUM RISE IN IN	MAXIMUM HORIZONTAL PROJECTION FT IN
1:12 TO 1:16	50 TO 75	2 TO 3	
1:16 TO 1:20	30 TO 50	1 TO 2	

Components of a Single Ramp Run and Sample Ramp Dimensions

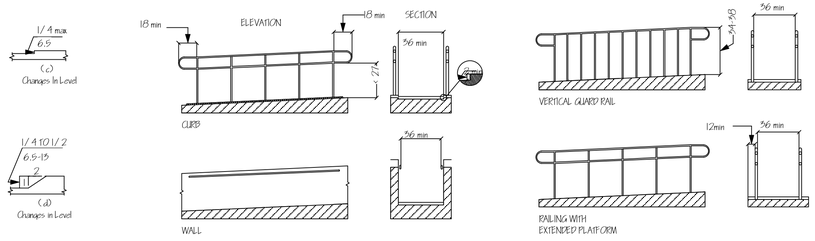

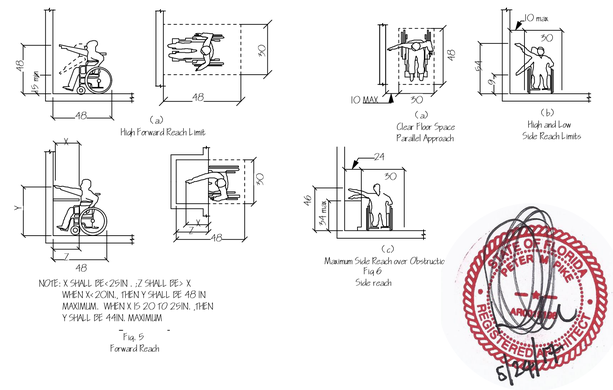

REVISIONS:	DATE
#1	12-29-2016
#2	5-24-2017
#3	8-04-2017

PIKE ARCHITECTS
- ARCHITECTS
- PLANNERS
- CONSULTANTS

471 US HIGHWAY #1
SUITE 101
KEY WEST, FLA. 33040
305-296-1692

The drawing & specifications contained herein are the property of Pike Architects and shall not be used for other work and are to be returned on request. Copyright 2016

For Permitting Only Not For Construction

PROJECT:
EXTENDED
NEW EMBARKMENT / DISSEMBARKMENT RAMP
KEY WEST BIGHT
FERRY TERMINAL

DRAWING TITLE:
FRAMING PLAN
& ADA DETAILS

PROJECT NUMBER: 16.23
DRAWN: KM/TSN
CHECKED: PMP
DATE: 09-19-2016

SHEET #
A-4
OF 6

PETER M. PIKE FLA. REGISTRATION # AR0015198

REVISIONS:	DATE
#1	12-29-2016
#2	5-24-2017
#3	8-04-2017

PROVIDE 3" I.D. SLEEVE AT SLAB FOR FUEL LINE & 2" I.D. SLEEVE FOR ELECTRICAL, CONTRACTOR TO VERIFY EXACT LOCATION & SIZE WITH MANUFACTURER PRIOR TO ANY WORK

NEW FUEL CONNECTION AND HOSE REELS - CONTRACTOR TO PROVIDE DESIGN BUILD COORDINATION AND CONSTRUCTION PER CITY REQUIREMENTS AND APPROVALS: CONTACT CITY MARINA MANAGER FOR DETAILS AND SPECS

BASE BID:
PROVIDE 1 FUEL HOUSE PUMP AT CENTER OF DOCK

ALTERNATE #1:
PROVIDE 2 FUEL HOUSE PUMPS AT END CORNERS OF DOCK

CONTRACTOR TO PROVIDE LIGHT POLE ANCHOR BASE PLATE DETAILS FROM MANUFACTURE FOR ARCHITECT APPROVAL

PROVIDE 3"I.D. SLEEVE FOR ELECTRICAL & 1 1/4" ID SLEEVE FOR WATER. CONTRACTOR VERIFY SIZES PRIOR TO ANY WORK

LINE OF NEW FUEL VERIFY ALIGNMENT WITH EXISTING FUEL LINE, VERIFY EXACT LOCATION ON SITE AS REQUIRED SEE DETAIL 1/A-4

PROVIDE 4" I.D. SLEEVE AT SLAB FOR WATER LINE, CONTRACTOR TO VERIFY EXACT LOCATION & SIZE WITH MANUFACTURER PRIOR TO ANY WORK

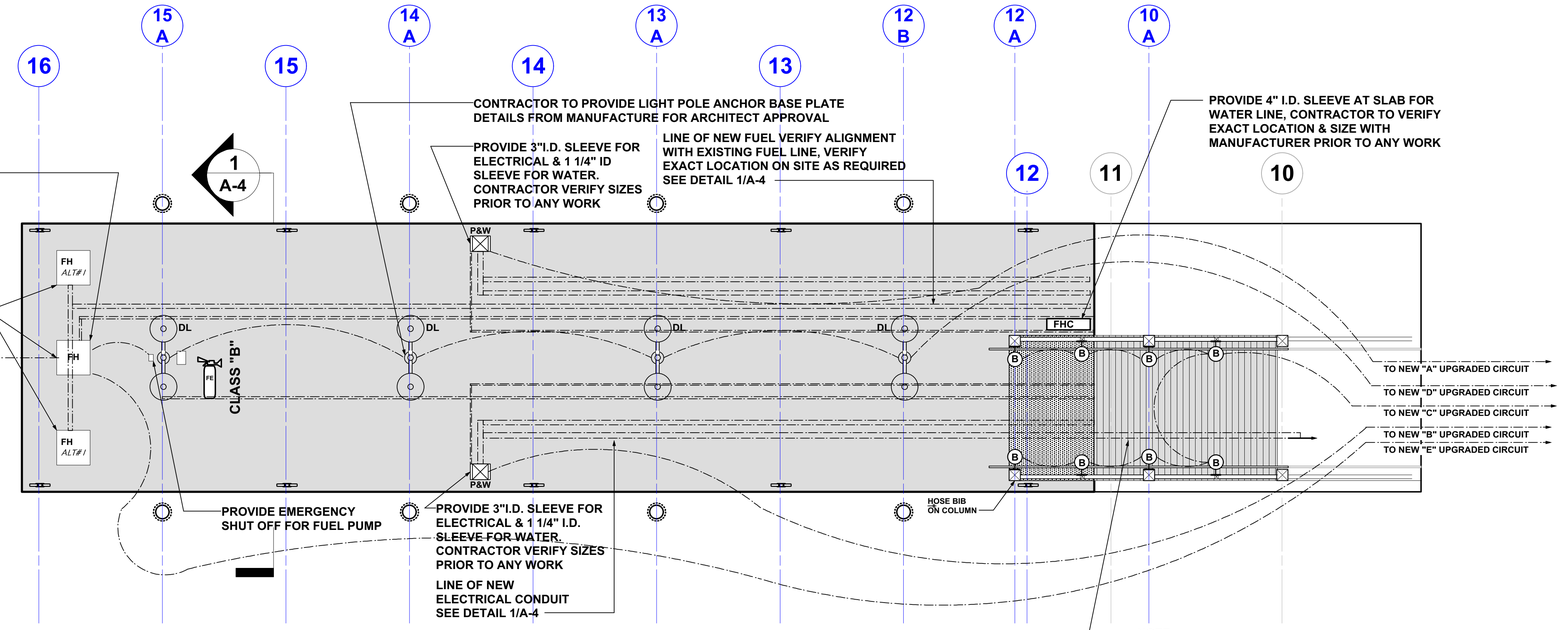

PROVIDE EMERGENCY SHUT OFF FOR FUEL PUMP

PROVIDE 3"I.D. SLEEVE FOR ELECTRICAL & 1 1/4" I.D. SLEEVE FOR WATER. CONTRACTOR VERIFY SIZES PRIOR TO ANY WORK

LINE OF NEW ELECTRICAL CONDUIT SEE DETAIL 1/A-4

NOTE:
RUN NEW ELECTRICAL SERVICE FEEDER LINES DOWN UNDERSIDE OF EXISTING WALKWAY FROM FERRY TERMINAL BUILDING & FIELD VERIFY NEW CORE DRILL AT EXISTING DOCK TO RUN NEW FEEDER LINE UNDER NEW DOCK EXTENSION

1 / A-5 ELECTRICAL & PLUMBING LINE SCHEMATIC EXTENSION DOCK PLAN
Scale: 3/16" = 1'-0"

PENETRATION NOTE:
COORDINATE ALL PENETRATION SIZES & LOCATIONS WITH PRECAST PANEL MANUFACTURER. TYPICAL AT ALL PANELS. PROVIDE SHOP DRAWINGS FOR ENGINEER APPROVAL.

SEE ELECTRICAL DRAWINGS

DOCK EQUIPMENT SPECIFICATIONS:

FH
FUEL DISPENSOR:
MANUFACTURER: PMC, PIPE MEASURE CONTROL
MODEL #: FUEL DISPENSOR, FH-515-MA-4M, 60GPM
1 1/2" HOSE, 100' HOSE, STAINLESS STEEL
PROVIDE STAINLESS STEEL CONTAINMENT/SAFETY VALE BOX AND SAFETY VALVE BELOW FUEL HOUSE. PROVIDE SHOP DRAWINGS FOR ARCHITECT & OWNER APPROVAL.

PROVIDE SHOP DRAWING OF SLEEVE PENTRATIONS AT SLAB

DECK CLEATS:
18" HEAVY DUTY CLOSED BASE CLEATS, GALVANIZED IRON
USE 3/4" SS JBOLTS, WET SET TO DOCK -
MATCH EXISTING SETBACK DIMENSIONS
MANUFACTURER: SEA DOG OR EQUAL
MODEL #: 040818

P&W
POWER PEDESTAL
MARINA POWER - MODEL #PCMFS 12 UTILITY PEDESAL OR EQUAL
"WHITE" WITH - 100 AMP BRK & 50 AMP BRK AT EACH SIDE & RECEPTICALS
HOSE BIB WITH BACKFLOWS BOTH SIDES
PROVIDE SHOP DRAWING OF SLEEVE PENTRATIONS AT SLAB

FHC
FIRE HOSE CABINET:
MANUFACTURER: MARINA POWER COMPANY OR EQUAL
MODEL #: FC1 CABINET (39"WX10"DX42"H & Fire Extinguisher Cabinet
COLOR: WHITE
FIRE EXTINGUISHER: TYPE "B"
PROVIDE SHOP DRAWING OF SLEEVE PENTRATIONS AT SLAB

PILE CAPS:
MANUFACTURER: AMERICAN DOCK BOXES OR EQUAL
MODEL #: ROUND PILE CAPS
COLOR: WHITE

LIGHT FIXTURE SCHEDULE:

MARK	FIXTURE TYPE MANUFACTURER/MODEL #	COMMENTS
DL		DOCK GENERAL LIGHTING TO MATCH EXISTING CITY PIER POLE LIGHTING
B	SEE ELECTRICAL DRAWINGS	MATCH EXISTING LIGHT FIXTURES

ELECTRICAL FIXTURE NOTE: PROVIDE SUBMITTAL FOR ARCHITECT & OWNER APPROVAL.

STATE OF FLORIDA PETER M. PIKE REGISTERED ARCHITECT APPROVED 5/24/17

PIKE ARCHITECTS
• ARCHITECTS
• PLANNERS
• CONSULTANTS
471 US HIGHWAY #1
SUITE 101
KEY WEST, FLA. 33040
305-296-1692

This drawing is the property of PETER PIKE ARCHITECT. It is not to be reproduced or used for other purposes without the prior written consent of the architect. Copyright 2016 PETER PIKE ARCHITECT. ©

For Permitting Only Not For Construction

PROJECT:
EXTENDED
NEW EMBARKMENT / DISSEMBARKMENT RAMP
KEY WEST BIGHT
FERRY TERMINAL

DRAWING TITLE:
DOCK
ELECTRICAL PLAN

PROJECT NUMBER: 16.23
DRAWN: KM/TSN
CHECKED: PMP
DATE: 09-19-2016

SHEET #
A-5
OF 6

PETER M. PIKE FLA. REGISTRATION # AR0015198

ENVIRONMENTAL NOTES AND SPECIFICATIONS

Environmental Notes:

1. The Contractor shall review environmental requirements of any proposed staging areas with the City of Key West (Karen Olson, Deputy Director, 305-809-3803) at least seventy-two (72) hours prior to use.
2. No staging or any other activities for this project will be allowed within or adjacent to Key West Bight, seagrass beds, or mangroves except as explicitly shown on the Contract Plans and permitted by the regulatory agencies.
3. Mangroves exist along the eastern shoreline of the project area along Trumbo Road. Any trimming or disturbance to mangroves shall comply with Sec 403.9321-9333 F.S., "Mangrove Trimming and Preservation Act"; A Professional Mangrove Trimmer, designated per 403.9329 F.S., shall be present on site throughout the duration of all mangrove trimming or disturbance activities. The Contractor shall coordinate with the Miami Dade County Project Engineer (Karen DeMaria,Urban Forestry Manager, 305-809-3768) at least seventy-two (72) hours in advance to obtain approval for these activities.)
4. This project is within the Florida Keys National Marine Sanctuary, which is designated as Outstanding Florida Waters (OFW). The project must comply with the turbidity requirements of the OFW designation including: no degradation of water quality; no increased turbidity of the water; and turbidity levels beyond the turbidity control measures cannot exceed 0 Nephelometric Turbidity Units (NTUs) above background levels.
5. The following Federal and State listed animal species could inhabit or migrate through the construction area: West Indian manatee (endangered), piping plover (threatened), sea turtles (endangered), smalltooth sawfish (endangered), roseate tern (threatened) and American crocodile (threatened). The Contractor shall comply with all Federal and State requirements regarding endangered and threatened species and State listed species of special concern. Should these species be encountered, the Contractor shall contact the City of Key West (Karen Olson, Deputy Director, 305-809-3803) within 24 hours of each encounter.
6. Seagrass beds and other benthic communities may exist in the project area. The contractor shall prevent contact with the seabed in these areas and any disturbance of bottom sediments (e.g., from moving or anchoring barges and other structures). The Contractor shall not shade any benthic community from direct sunlight for more than two weeks. Anchoring locations shall be approved by the Project Engineer.

General Comments/Notes to Designer:

Based on a desktop review of DERM and FDEP GIS layers, there are (2) facilities with known contamination within a 300-ft buffer of the project (see list below). Due to the scope of this project and the location of the facility, a more detailed Phase I (Level I) Environmental Site Assessment (ESA) is not necessary at this time. Should the project limits or the scope of work change, a Phase I (Level I) ESA and subsequent Phase II (Level II) ESA may be necessary. Please include the attached notes addressing unidentified areas of contamination during construction in the contract plans.

LIST OF KNOWN AND POTENTIAL CONTAMINATED SITES

1. Key West Bight Terminal, 201 Grinnell St, FDEP #9802172
2. Conch Harbor Marina, 951 Caroline St, FDEP #8735043

UNIDENTIFIED AREAS OF CONTAMINATION

When encountering or exposing any abnormal condition indicating the presence of a hazardous or toxic waste, or contaminants, cease operations immediately in the vicinity and notify the City of Key West Engineer. The presence of tanks or barrels; discolored earth, metal, wood, ground water, etc.; visible fumes; abnormal odors; excessively hot earth; smoke; or other conditions that appear abnormal may indicate hazardous or toxic wastes or contaminants and must be treated with extreme caution.

Make every effort to minimize the spread of contamination into uncontaminated areas. Immediately provide for the health and safety of all workers at the job site and make provisions necessary for the health and safety of the public that may be exposed to any potentially hazardous conditions. Provisions shall meet all applicable local, State, and Federal laws, rules, regulations or codes covering hazardous conditions and will be in a manner commensurate with the gravity of the conditions.
The City of Key West Engineer and/or Prime Contractor will coordinate and mobilize a qualified Contamination Assessment/Remediation (CAR) Contractor. Qualifications of such CAR Contractor shall include: experience and personnel to prepare contamination assessment plans, conduct contamination assessments, prepare site assessment reports, implement remedial action plans, risk based corrective actions or any other type of environmental assessment or remedial activities as necessary.
All the work performed by the CAR Contractor shall be performed in compliance with all applicable local, state and federal regulations governing worker safety and environmental regulations. This is to include occupational exposure to contaminated soils, groundwater, wastes and atmosphere during the construction of all features included in the construction plans. In addition, the CAR Contractor must be staffed with Florida licensed technical professionals (geologists and engineers) who will be involved with the project and howledgeable of the work activities conducted within the identified contaminated areas and who would sign and seal project reports as required for submittal to the appropriate environmental regulatory agencies.
The City of Key West Engineer will immediately notify the Florida Department of Transportation (FDOT) District VI Contamination Impact Coordinator (DCIC) at (305) 470-5228 after encountering the unidentified areas of contamination. Preliminary investigation by the CAR Contractor will determine the course of action necessary for site security and the steps necessary under applicable laws, rules, and regulations for additional assessment and/or remediation work to resolve the contamination issue.

Following completion of the project, the CAR Contractor shall be required to provide copies of all reports submitted to regulatory agencies, waste material profiles, manifests and/or disposal receipts for the handling of all contaminated media including but not limited to ground water, waste water, soils, solid wastes, sludge, hazardous wastes, air monitoring records and sample results for all materials tested and analyzed to the City of Key West Engineer and the FDOT DCIC.

TURBIDITY BARRIER NOTES AND SPECIFICATIONS

NOTE: ENTITE PROJECT TO BE PROTECTED VIA IMPLIMENTATION OF A TURBIDITY BARRIER AND ENVIORMENTAL PROTECTION PLAN AS REQUIRED BY LOCAL, STATE AND FEDEWRAL LAW

ARCHITECTURAL SPECIFICATIONS

DIVISION 1 - GENERAL REQUIREMENTS

1. THE GENERAL CONDITIONS OF THE CONTRACT FOR CONSTRUCTION, AIA DOCUMENT A201, ARE A PART OF THIS PROJECT. CONTRACTORS WHO ARE NOT FAMILIAR WITH THIS DOCUMENT MAY OBTAIN COPIES FROM THE ARCHITECT, OR THE OFFICE OF THE AMERICAN INSTITUTE OF ARCHITECTS, MIAMI, FLORIDA. OWNER MAY SUBSTITUTE CONTRACT FOR CONSTRUCTION OTHER THAN AIA 201.
2. ALL WORK SHALL BE IN STRICT CONFORMITY WITH THE FLORIDA BUILDING CODE, LATEST EDITION, AND WITH ALL APPLICABLE LAWS, CODES AND ORDINANCES OF THE CITY, COUNTY, STATE, UTILITY COMPANIES AND ANY OTHER GOVERNING AGENCIES.
3. THE CONTRACT WORK INCLUDES ALL MATERIAL, EQUIPMENT, TOOLS, LABOR AND SERVICES NECESSARY FOR THE COMPLETION OF THE PROJECT. THE OWNER HAS THE RIGHT TO, AND EXPECTS ALL WORK TO BE COMPLETED AS EXPEDITIOUSLY AS QUALITY WORKMANSHIP SHALL ALLOW.
4. THE CONTRACTOR SHALL PROCURE AND PAY FOR ALL NECESSARY BUILDING PERMITS AND FOR INSPECTION SERVICES OF LOCAL AUTHORITIES WHERE REQUIRED BY LAW.
5. NOTIFY ALL UTILITY COMPANIES PRIOR TO EXCAVATION FOR LOCATION OF UNDERGROUND UTILITIES, AND/OR PROTECTION OR REMOVAL OF OVERHEAD POWER LINES AND POLES.
6. PROVIDE SAFETY BARRICADES, SIGNALS, FENCES, ETC., AS REQUIRED FOR THE SAFE EXECUTION OF THE WORK.
7. THE OBSERVATION OF THE CONTRACT WORK SHALL BE DONE BY THE PERSON LISTED IN THE CONTRACT AGREEMENT AS THE ARCHITECT. IN THE CASE THAT NO OBSERVATION BY THE ARCHITECT IS PROVIDED IN THE CONTRACT, THE FUNCTIONS OF THE ARCHITECT, WHEREVER CALL FOR IN THE SPECIFICATIONS, SHALL BE EXERCISED BY THE OWNER.
8. THE CONTRACTOR SHALL PROVIDE A TEMPORARY INSTALLATION OF ELECTRIC SERVICE IF SUCH SERVICE IS NOT AVAILABLE ON SITE.
9. MATERIALS AND LABOR
9.1 SUBMIT SAMPLES TO THE ARCHITECT FOR APPROVAL OF COLOR WHERE REQUIRED.
9.2 ALL WORK SHALL BE PERFORMED IN THE BEST AND MOST PROFESSIONAL MANNER BY MECHANICS SKILLED IN THEIR RESPECTIVE TRADES.
9.3 WHERE BRAND NAMES OR MANUFACTURERS NAMES APPEAR, THEY ARE USED TO ESTABLISH A QUALITY OF MATERIAL AND/OR PROCESS. SUBSTITUTIONS WILL BE APPROVED BY THE ARCHITECT IF , IN HIS JUDGMENT, THEY CONSTITUTE AN EQUAL MATERIAL OR PROCESS.
9.4 ALL TRADES SHALL GUARANTEE ALL WORK TO BE FREE OF DEFECTS IN MATERIALS OR WORKMANSHIP FOR A PERIOD OF ONE (1) YEAR FROM THE DATE OF FINAL ACCEPTANCE.
9.5 APPLY, INSTALL, CONNECT, ERECT, CLEAN, CONDITION, AND USE ALL MANUFACTURED ARTICLES IN ACCORDANCE WITH THE MANUFACTURERS INSTRUCTIONS AND AS SHOWN ON THE DRAWINGS. PROVIDE OWNER WITH ALL GUARANTEES AND MAINTENANCE MANUALS FOR ALL APPLIANCES AND PIECED OF EQUIPMENT INSTALLED AS A PART OF THE WORK.
10. PERFORMANCE
10.1 BY SUBMITTING A BID, THE BIDDER AGREES AND WARRANTS THAT HE HAS EXAMINED THE DRAWINGS AND SPECIFICATIONS AND FOUND THAT THEY ARE ADEQUATE FOR THE PROPER COMPLETION OF THE PROJECT.
10.2 NO CLAIMS FOR ANY EXTRA CHARGES WILL BE ALLOWED BECAUSE OF ALLEGED IMPOSSIBILITIES DUE TO INADEQUATE DRAWINGS OR SPECIFICATIONS.
10.3 THE CONTRACTOR SHALL BE RESPONSIBLE FOR VERIFYING FIELD MEASUREMENTS BEFORE ORDERING MATERIALS AND PREFABRICATED ITEMS. ANY NECESSARY ADJUSTMENTS BETWEEN FIELD MEASUREMENTS AND DRAWINGS SHALL BE MADE AS PER THE DECISION OF THE ARCHITECT
11. PAYMENTS
PER CONTRACT WITH OWNER
12. INSURANCE
12.1 THE CONTRACTOR SHALL CARRY WORKMEN COMPENSATION INSURANCE TO THE EXTENT REQUIRED BY LAW AND SHALL MAINTAIN SUCH INSURANCE IN FULL FORCE DURING THE ENTIRE TIME OF THIS CONTRACT.
12.2 THE CONTRACTOR SHALL CARRY COMPREHENSIVE GENERAL AND AUTOMOTIVE LIABILITY INSURANCE OF $100,000 TO $300,000 (MINIMUM) AND PROPERTY DAMAGE INSURANCE OF $50,000 (MINIMUM).
13. COMPLETION
13.1 ALL WORK SHALL BE SUBSTANTIALLY COMPLETED AT A TIME STIPULATED IN THE CONTRACT AGREEMENT OR IN TIME EXTENDED FOR JUSTIFIABLE DELAYS, IF ANY.
13.2 A BUILDING OR ANY OTHER WORK SHALL BE CONSIDERED SUBSTANTIALLY COMPLETED WHEN NINETY-FIVE PERCENT (95%) OF THE WORK IS DONE AND THE BUILDING IS READY FOR OCCUPANCY OR THE PREMISES FOR USE.

CONCRETE EPOXY COATING TO MATCH EXISTING COLOR, TEXTURE AND APPLICATION

6.1 FINISHED FLOOR SLAB SURFACES SHALL BE PLANE SURFACES AS SHOWN ON THE DRAWINGS. WHERE DRAINS OCCUR SLOPE FLOOR EVENLY TO DRAINS.
6.2 INTERIOR SLABS SHALL BE SCREEDED WITH A STRAIGHT EDGE, FLOATED TO THE REQUIRED LEVEL, AND STEEL TROWELED TO A SMOOTH HARD FINISH.EXTERIOR SLABS SHALL BE BROOM FINISHED.
6.3 CONCRETE FLOORS SHALL BE CHECKED FOR TRUENESS WITH AN 8 FOOT STRAIGHT EDGE. ANY DEVIATION FROM THE LINE OF THE STRAIGHT EDGE BY MORE THAN 1/4" SHALL BE REPAIRED IN A MANNER SATISFACTORY TO THE ARCHITECT.
7. AFTER CONSTRUCTION IS COMPLETED, THOROUGHLY CLEAN ALL EXPOSED FLOORS WITH SOAP AND WATER.
8. CONTROL JOINTS SHALL BE FORMED AS INDICATED ON DRAWINGS, OR FORMED WITH METAL KEYWAY TO REMAIN IN THE SLAB.SLABS WITH AN APPROVED LIQUID CURING COMPOUND AND SEALING AGENT, APPLIED IN ACCORDANCE WITH THE MANUFACTURERS RECOMMENDATIONS.

DIVISION 4 - MASONRY

1. SCOPE: FURNISH AND INSTALL ALL LABOR, MATERIALS, EQUIPMENT AND SERVICE NECESSARY TO COMPLETE ALL MASONRY WORK AS INDICATED OR SPECIFIED.
2. RELATED WORK SPECIFIED ELSEWHERE: MASONRY WALL INSULATING AND FILL, FACE CAULKING OF CONTROL JOINTS.
3. MATERIALS: CONCRETE MASONRY UNITS SHALL CONFORM TO ASTM C-90, GRADE U-1, FC M=1350 P.S.I.
4. CONSTRUCTION AND WORKMANSHIP:
4.1 THE WORK SHALL BE DONE BY EXPERIENCED MECHANICS, SKILLED IN THEIR TRADE, IN A FIRST CLASS MANNER.
4.2 THE CONTRACTOR SHALL BE RESPONSIBLE FOR QUALITY OF WORKMANSHIP AND FOR COMPLIANCE WITH THE DESIGN AND SPECIFICATIONS. HE SHALL CORRECT ALL ERRORS AND DEVIATIONS AS REQUESTED BY THE ARCHITECT.
4.3 TRANSPORT AND HANDLE ALL MASONRY UNITS IN SUCH MANNER AS TO PREVENT CHIPPING AND BREAKAGE. PROTECT ALL MASONRY FROM INCLEMENT WEATHER EFFECTS AND HEAVY AND UNNECESSARY TRAFFIC.
4.4 DO NOT LAY CHIPPED CRACKED OR OTHERWISE DEFECTIVE UNITS IN THE WALL.
4.5 ALL JOINTS SHALL BE AS INDICATED ON DRAWINGS, STRAIGHT, TRUE, AND UNIFORM IN THICKNESS TO COURSE VERTICALLY TO 8 .
4.6 ALL MASONRY SHALL BE RUNNING BOND UNLESS INDICATED OTHERWISE.
4.7 PROVIDE ALL OPENINGS IN MASONRY WALLS WHERE REQUIRED OR INDICATED. BUILD IN ALL ITEMS AS REQUIRED FOR A COMPLETE JOB, INCLUDING (BUT NOT LIMITED TO) REINFORCING STEEL, BOLTS, ANCHORS, CONDUITS AND PIPING.
4.8 CLEAN ALL FINISHED MASONRY WALLS FOR A NEAT CLEAN AND FINISHED APPEARANCE, IF EXPOSED TO VIEW.
4.9 INSTALL HORIZONTAL JOINT REINFORCEMENT IN WALL JOINTS AT 16" ON CENTER VERTICAL.

DIVISION 6 - CARPENTRY AND MILLWORK:

1. SCOPE: ALL ROUGH AND FINISH CARPENTRY WORK AND MILL WORK AS INDICATED ON DRAWINGS AND SPECIFIED. THE INSTALLATION OF ALL ROUGH AND FINISH HARDWARE, SHELVING AND TRIM, HANGER AND ALL MATERIAL NECESSARY TO COMPLETE ALL THE FRAMING AND FINISH WORK AS SHOWN . INSTALL ALL BLOCKING, FIRE STOPS, BACKING, BRIDGING, ETC., FOR THE PROPER INSTALLATION OF ALL APPLIED ITEMS.
2. RELATED WORK SPECIFIED ELSEWHERE: FINISHES.

DIVISION 16 - ELECTRICAL

1. SCOPE: FURNISH, INSTALL AND CONNECT COMPLETE ELECTRICAL SYSTEMS AS SHOWN ON THE DRAWINGS, SPECIFIED OR OTHERWISE NECESSITATED BY THE WORK, INCLUDING, BUT NOT NECESSARILY LIMITED TO:ELECTRICAL SERVICE ENTRANCE AND METERING, COMPLETE ELECTRIC DISTRIBUTION SYSTEM FOR LIGHTING AND POWER, WIRING AND RELATED WORK FOR: MECHANICAL SYSTEMS, MOTORS, PUMPS, TELEPHONE, CABLE T.V. ROUGH IN, AND EQUIPMENT.
2. RELATED WORK SPECIFIED ELSEWHERE: EXCAVATION, FILLING AND BACKFILLING, MECHANICAL AND PLUMBING
3. CONSTRUCTION AND WORKMANSHIP: ALL WORK AND MATERIALS SHALL COMPLY WITH THE FOLLOWING ASMINIMUM STANDARDS.
A.THE NATIONAL ELECTRIC CODE, LATEST EDITION
B.THE NATIONAL ELECTRIC MANUFACTURERS ASSOCIATION STANDARDS
C.THE NATIONAL ELECTRICAL SAFETY CODE
D.THE INSULATED POWER CABLE ENGINEERS ASSOCIATION STANDARDS
E.UNDERWRITERS LABORATORIES INCORPORATED STANDARDS
4 GENERAL REQUIREMENTS
4.1 ALL OUTLETS SHALL BE GROUNDED
4.2 ALL WORK SHALL BE CONCEALED.
4.3 ALL GROUNDING SHALL BE IN ACCORDANCE WITH THE NATIONAL ELECTRIC CODE. GROUND ROD AND ASSEMBLY SUPPLIED AND INSTALLED BY CONTRACTOR
4.4 LIGHTING FIXTURES, EQUIPMENT, ETC., SHALL BE AS SCHEDULED OR OTHERWISE INDICATED ON THE DRAWINGS.
4.5 THE CONTRACTOR SHALL GUARANTEE THE ENTIRE INSTALLATION (EXCEPT LAMPS) FOR A PERIOD OF ONE (1) YEAR FROM THE DATE OF FINAL ACCEPTANCE.
4.6 MATERIALS AND EQUIPMENT SHALL COMPLY WITH THE APPLICABLE CURRENT STANDARDS OF UNDERWRITERS LABORATORIES INC.:
PANELS: SQUARE "D" OR EQUAL PANELS WITH RAIN TIGHT ENCLOSURE WHEN USED OUTDOORS.
ROMEX 12-2 WITH GROUND AND METAL BOXES ARE PERMITTED, UNLESS OTHERWISE SPECIFIED ON THE DRAWINGS. INSTAL WITH METAL CONDUIT
FEEDERS TO BE (2) 1/0 THW W/ (1) THW IN 4" CONDUIT. OR AS NOTED ON DRAWINGS
CONDUIT TO BE P.V.C. PROVIDE STUB ONLY.
WIRING DEVICES SHALL BE LEVITON, RESIDENTIAL GRADE WHITE, OR APPROVED EQUAL.
4.7 CONTRACTOR SHALL FURNISH LIGHTING FIXTURES AND FANS IN CONTRACT AS CALLED FOR ON THE FIXTURE SCHEDULE SHOWN ON THE DRAWINGS. IN THE ABSENCE OF A FIXTURE SCHEDULE, FIXTURES WILL BE AS SELECTED BY THE OWNER AND PAID BY THE OWNER AS A NEGOTIATED EXTRA TO THE CONTRACT. THE OWNER RESERVES THE RIGHT TO FURNISH FIXTURES SUPPLIED OR INSTALLATION IN LIEU OF PURCHASING THEM THROUGH THE CONTRACTOR.
4.8 CONTRACTOR SHALL FURNISH AND INSTALL APPROVED HARD-WIRED SMOKE DETECTORS IN ACCORDANCE WITH THE REQUIREMENTS

STATE OF FLORIDA
PETER M. PIKE
REGISTERED ARCHITECT
AR0015198

REVISIONS:	DATE
#1	12-29-2016
#2	5-24-2017
#3	8-04-2017

PIKE ARCHITECTS
- ARCHITECTS
- PLANNERS
- CONSULTANTS

471 US HIGHWAY #1
SUITE 101
KEY WEST, FLA. 33040
305-296-1692

This drawing is the property of the architect and must be returned on request. No reproduction or use of the drawing or its contents without written consent is prohibited. © Copyright 2016

For Permitting Only Not For Construction

PROJECT:
EXTENDED
NEW EMBARKMENT / DISSEMBARKMENT RAMP
KEY WEST BIGHT
FERRY TERMINAL

DRAWING TITLE:
ENVIORMENTAL NOTES
GENERAL SPECS.

PROJECT NUMBER: 16.23
DRAWN: KM/TSN
CHECKED: PMP
DATE: 09-19-2016

SHEET #
A-6
OF 6

PETER M. PIKE FLA. REGISTRATION # AR0015198

CITY OF KEY WEST - 80 FT LONG PIER EXTENSION

KEY WEST BIGHT FERRY TERMINAL

THESE DRAWINGS ARE BASED ON ARCHITECTURAL DRAWING SET DATED 08-02-2016

DRAWING INDEX

S-1 DRAWING INDEX & GENERAL NOTES
S-2 SITE PLAN
S-3 PILE LAYOUT AND BENT FRAMING PLAN
S-4 PRESTRESSED BEAM FRAMING PLAN & DETAILS
S-5 GENERAL SECTIONS
S-6 SECTIONS & DETAILS
S-7 PILE CAP REINFORCING AT PIER 1
S-8 PILE CAP REINFORCING AT PIERS 2, 3 AND 4
S-9 PILE CAP REINFORCING AT PIER 5
S-10 PRESTRESSED BEAMS REINFORCING
S-11 WOOD FENDER PILES AND DOLPHINS

ABBREVIATIONS:

A : ARCHITECT
CIP : CAST-IN-PLACE
CLR : CLEAR COVER
C.P. : CONTROL POINT
E : ENGINEER
EF : EACH FACE
ELEV : ELEVATION
FDOT : FLORIDA DEPARTMENT OF TRANSPORTATION
FF : FAR FACE
GC : GENERAL CONTRACTOR
MLW : MEAN LOW WATER
NF : NEAR FACE
N.I. : NOT INCLUDED
NVGD : NATIONAL GEODETIC VERTICAL DATUM
QPL : QUALIFIED PRODUCT LIST
P/C : PRECAST
P/S : PRESTRESSED, PRESTRESSING
SDG : STRUCTURES DESIGN GUIDELINES
SIM : SIMILAR
T.D.E. : TOP OF DECK ELEVATION
T.F.D.E. : TOP OF FINISHED DECK ELEVATION
U.N.O. : UNLESS NOTED OTHERWISE

LIST OF REFERENCED FDOT DESIGN STANDARDS

INDEX NO.	DESCRIPTION
20600	NOTES AND DETAILS FOR SQUARE P/S CONCRETE PILES
20614	14" SQUARE PRESTRESSED CONCRETE PILE

GENERAL NOTES

A. CODES, SPECIFICATIONS AND DESIGN GUIDELINES:

1. FLORIDA BUILDING CODE, 5TH EDITION (2014).
2. FLORIDA DEPARTMENT OF TRANSPORTATION STANDARD SPECIFICATIONS FOR ROAD AND BRIDGE CONSTRUCTION, (2016 EDITION).
3. DESIGN STANDARDS AND REFERENCES:
   a) ASCE/SEI 7-10 STANDARD, MINIMUM DESIGN LOADS FOR BUILDINGS AND OTHER STRUCTURES
   b) ACI 318-11 BUILDING CODE REQUIREMENTS FOR STRUCTURAL CONCRETE.

B. DESIGN LOADS:

1. DEAD LOADS:
   a) UNIT WEIGHT OF CONCRETE : 150 PCF
2. SUPERIMPOSED DEAD LOADS
   a) MECHANICAL EQUIPMENT : 30 PSF
3. SUPERIMPOSED LIVE LOADS:
   a) SUPERIMPOSED LIVE LOAD : 150 PSF
4. WIND LOADS:
   RISK CATEGORY: : I
   EXPOSURE CATEGORY: : D
   BASIC WIND SPEED (MONROE COUNTY): : 170 MPH (3 SEC. GUST)
5. DESIGN VESSEL: : DWT = 200 TONNES
   : LOA = 111 FT
   : BEAM = 24 FT
   : DRAFT = 6 FT

C. MATERIALS:

1. CONCRETE:

CLASS OF CONCRETE	MIINIMUM COMPRESSIVE STRENGTH (PSI) 28-DAY	AT TRANSFER	LOCATION OF CONCRETE IN STRUCTURE
IV (Bridge Deck)	5,500	-	CIP TOPPING & CONCRETE OVER CAP BEAMS
IV	5,500	-	CAP BEAMS
V (Special)	6,000	4,000	PRESTRESSED BEAMS AND PILES

   a) ALL CONCRETE SHALL HAVE TYPE II CEMENT AND CLASS F FLY ASH.
   b) PROVIDE ¾" CHAMFERS ON ALL EXPOSED EDGES UNLESS OTHERWISE NOTED.
   c) JOINTS WILL BE PERMITTED ONLY AT LOCATIONS SHOWN ON THE PLANS. ADDITIONAL CONSTRUCTION JOINTS, OR ALTERNATE LOCATIONS TO THOSE SHOWN SHALL REQUIRE WRITTEN APPROVAL BY THE ENGINEER.
2. REINFORCING STEEL:
   a) ALL REINFORCING STEEL BARS SHALL BE ASTM A615, GRADE 60 UNCOATED.
   b) WWM - SHALL BE DEFORMED WELDED WIRE PER ASTM A497 UNCOATED.
   c) HEADED DOWELS SHALL BE ASTM A970, A706, OR A615 GRADE 60.
   d) ALL DIMENSIONING PERTAINING TO THE LOCATION OF REINFORCING ARE TO THE CENTERLINE OF BARS, OR CENTERLINE OF MESH UNLESS NOTED OTHERWISE.
   e) REINFORCEMENT DETAIL DIMENSIONS ARE OUT TO OUT OF BARS OR MESH.
   f) PRESTRESSING STRANDS FOR BEAMS SHALL BE ASTM A416, 270K LOW RELAXATION UNCOATED.
   g) PRESTRESSING STRANDS FOR PILES SHALL BE CFRP PER SECTON 933 OF FDOT SSRBC.
   h) SPIRAL TIES FOR PILE STRANDS SHALL BE CFRP PER SECTION 932 OF FDOT SSRBC.

D. ENVIRONMENTAL CLASSIFICATION:

SUPERSTRUCTURE	SUBSTRUCTURE
EXTREMELY AGGRESSIVE	EXTREMELY AGGRESSIVE

E. CONCRETE REINFORCEMENT COVER:

1. CONCRETE COVER SHALL BE AS FOLLOWS U.N.O.:
   - PRESTRESSED PILES : 3" CLEAR TO SPIRAL TIES
   - PILE CAPS : 3" CLEAR TO STIRRUPS
   - PRESTRESSED BEAMS : 3" TO CENTER OF STRANDS
   - CAST-IN-PLACE JOINTS : 3" VERTICAL CLEAR TO STIRRUPS
   - TOP OF TOPPING : 2½" CLEAR
2. CONCRETE COVER SHOWN IN THE PLANS DOES NOT INCLUDE REINFORCEMENT PLACEMENT TOLERANCES UNLESS SHOWN AS "MINIMUM COVER". SEE FDOT STANDARD SPECIFICATIONS FOR ALLOWABLE REINFORCEMENT PLACEMENT TOLERANCES.

F. CORROSION PROTECTION:

1. HIGH PERFORMANCE PENETRATING SEALER FROM FDOT APL SHALL BE APPLIED TO THE SURFACES INDICATED ON THESE DRAWINGS ONLY.

G. DECK FINISH:

1. THE CAST-IN-PLACE STRUCTURAL TOPPING SHALL HAVE A UNIFORM TRANSVERSE LIGHT BROOM FINISH. THE GENERAL CONTRACTOR SHALL VERIFY THAT THIS FINISH IS CONSISTENT WITH THE REQUIREMENTS FOR THE PROPER INSTALLATION OF THE ARCHITECT'S SPECIFIED EPOXY TOPPING.
2. THE KEYWAYS SHALL BE GROUTED PRIOR TO INSTALLATION OF THE REINFORCEMENT AND POURING OF THE CAST-IN-PLACE CONCRETE OVER THE DECK.

H. UTILITIES:

1. PENETRATIONS TO EXCEED 8" DIAMETER OR 8" SQUARE SHALL BE FORMED IN THE PRECAST CONCRETE BEAMS AND C.I.P. CAP BEAMS AS APPLICABLE.
2. CONTRACTOR SHALL VERIFY THE LOCATION OF ALL PENETRATIONS PRIOR TO CONTRUCTION OF THE CAP BEAMS AND THE FABRICATION OF PRECAST BEAMS. CORE DRILLING THROUGH THE PRESTRESSING TENDONS IN THE PRECAST BEAMS SHALL NOT BE ALLOWED.

I. ELEVATIONS:

1. ALL ELEVATIONS SHOWN ON THESE DRAWINGS ARE NGVD IN FEET, UNLESS NOTED OTHERWISE.

J. CONSTRUCTION TOLERANCES:

ALL CONSTRUCTION TOLERANCES SHALL BE PER FDOT STANDARD SPECIFICATIONS UNLESS NOTED OTHERWISE ON THESE DRAWINGS.

K. PRECAST MANUFACTURER:

1. PRECAST MANUFACTURER SHALL BE FDOT CERTIFIED WITH AT LEAST 10 YEARS EXPERIENCE IN THE FABRICATION OF THE SPECIFIED PRODUCTS.
2. PRECAST MANUFACTURER SHALL SUBMIT SIGNED AND SEALED SHOP DRAWINGS AND LIFTING DESIGN CALCULATIONS FOR REVIEW.

L. OTHER SHOP DRAWINGS:

1. THE FOLLOWING SHOP DRAWINGS SHALL BE ALSO SUBMITTED FOR REVIEW: CONCRETE MIX DESIGN(S), REINFORCING, ACCESSORIES, MECHANICAL, ELECTRICAL, CLEATS, AND ANY OTHER DRAWINGS FOR INSTALLATIONS THAT MAY REQUIRE COORDINATION WITH THE REINFORCEMENT.

M. PILE INSTALLATION:

1. THE PILE DRIVING EQUIPMENT SHALL BE SELECTED BY THE PILE SPECIALTY CONTRACTOR IN COORDINATION WITH THE GEOTECHNICAL CONSULTANT AS REQUIRED.
2. THE METHOD OF INSTALLATION SHALL FOLLOW THE GEOTECHNICAL REPORT CONSTRUCTION RECOMMENDATIONS AND FDOT STANDARD SPECIFICATION A455.
3. THE LENGTH OF THE PRODUCTION PILES SHALL BE DEFINED BY THE CONTRACTOR AFTER THE TEST PILES ARE DRIVEN TO PRACTICAL REFUSAL AS PER FDOT STANDARD A455.
4. ALL COSTS ASSOCIATED TO PILE INSTALLATION, INCLUDING BUT NOT LIMITED TO PRE-FORMING, PILE CUTOFFS AND DOWEL INSTALLATION SHALL BE INCLUDED IN THE BID PRICE.

N. GEOTECHNICAL INVESTIGATION:

1. FOR SUB-SURFACE EXPLORATION DATA, GEOTECHNICAL ENGINEERING EVALUATION AND FOUNDATION CONSTRUCTION RECOMMENDATIONS, REFER TO "GEOTECHNICAL EXPLORATION REPORT DATED MARCH 2012- FERRY TERMINAL DOCK EXTENSION" BY NUTTING ENGINEERS OF FLORIDA, INC., 2051 NW 112th AVE., SUITE 126, MIAMI, FLORIDA 33072, TELEPHONE 305.557.3083, ORDER NO. 126.21.3.

REV	DESCRIPTION	DATE	BY
1	PILE REINFORCEMENT	4-10-17	M.C.

M. CORDERO & ASSOCIATES
STRUCTURAL ENGINEERS
CA # 6278
1227 LAKE MIRIAM DRIVE, LAKELAND, FLORIDA 33813
TEL. (863) 646-6277 FAX. (863) 533-1054
www.prestress.com/mca Web Page

PETER PIKE ASSOCIATES
Architects - Planners - Consultants
471 US HIGHWAY 1 SUITE 101
KEY WEST, FL 33040
305-296-1692

DRAWING INDEX, GENERAL NOTES

JOB NAME: CITY OF KEY WEST PIER EXTENSION
LOCATION: 100 GRINNELL ST., KEY WEST, FLORIDA
ARCHITECT: PETER PIKE ASSOCIATES
CONTRACTOR:

DRAWN : K.C.
CHK'D. : M.C.
APPR. : M.C.
DATE : 08-11-16
RELEASED:
JOB NO: 071116
SHT: 1.0 OF: 11

KEY WEST BIGHT

SUBMERGED LANDS LEASE AREA, 2.43AC (KW BIGHT FERRY TERMINAL)

PROPOSED CONCRETE PIER EXTENSION

ENGINEER OF RECORD NOTE:
Per request from the City of Key West, the information pertaining to the proposed Pier Extension has been added to this drawing prepared by others. MC&A takes no responsibility for the accuracy of all other information or data on this sheet.

Existing Federal Maintained Shipping Channel

Ferry Maneuvering Zone

PROPOSED 80' PIER EXTENSION

RELOCATED HIGH SPEED FUEL SYSTEM

FENDER PILE (PROPOSED)

40.00' 40.00' 25.00' 25.00'

REMOVE CLUSTER PILES (EXISTING)

REMOVE CLUSTER DOLPHIN PILES (EXISTING)

DREDGE AREA 75,500SF

Exist. Concrete Dock 179.90'

HIGH SPEED FUEL SYSTEM (EXISTING)

FENDER PILE (EXISTING)

CONCRETE DOCK (EXISTING)

SEAWALL ELEV. 3.85

DREDGE AREA 75,500SF

25'

25.00'

243.45'

Riparian Line

Right-of-Way Line

edge of asphalt

Approx. Mean High Water Line

TRUMBO ROAD (45.59' R/W)

U.S.ARMY C.O.E. MONUMENT FND. "KH-17-1963" N: 84856.237 E: 390814.491 6.06' NGVD 29

old conc. seawall

Concrete Seawall

32°31'28"E. 777.90'

Sunset Key Ramp

Existing Wood Dock

Floating Dock

Sty. frame Dockmaster Bldg.

Floating Dock

NOT A PART

CONCH HARBOR

PIER Elev. 4.15

2' conc. seawall

Face Conc. Seawall top Elev. 3.50 N.G.V.D.

Conc. Seawall

GRINNELL STREET

Key West

N.T.S.

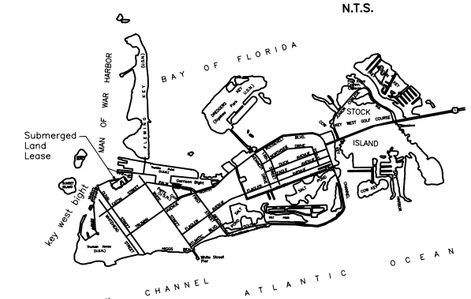

LOCATION MAP
City of Key West & Stock Island

REV	DESCRIPTION	DATE	BY

M. CORDERO & ASSOCIATES
STRUCTURAL ENGINEERS
CA # 6278
1227 LAKE MIRIAM DRIVE, LAKELAND, FLORIDA 33813
TEL. (863) 646-6277 FAX. (863) 533-1054
www.prestress.com/mca Web Page

PETER PIKE ASSOCIATES
Architects - Planners - Consultants
471 US HIGHWAY 1 SUITE 101
KEY WEST, FL 33040
305-296-1692

SITE PLAN

JOB NAME: CITY OF KEY WEST PIER EXTENSION
LOCATION: 100 GRINNELL ST., KEY WEST, FLORIDA
ARCHITECT: PETER PIKE ASSOCIATES
CONTRACTOR:

DRAWN : K.C.
CHK'D. : M.C.
APPR. : M.C.
DATE : 08-11-16
RELEASED:

JOB NO: 071116

SHT: 2.0 OF: 11

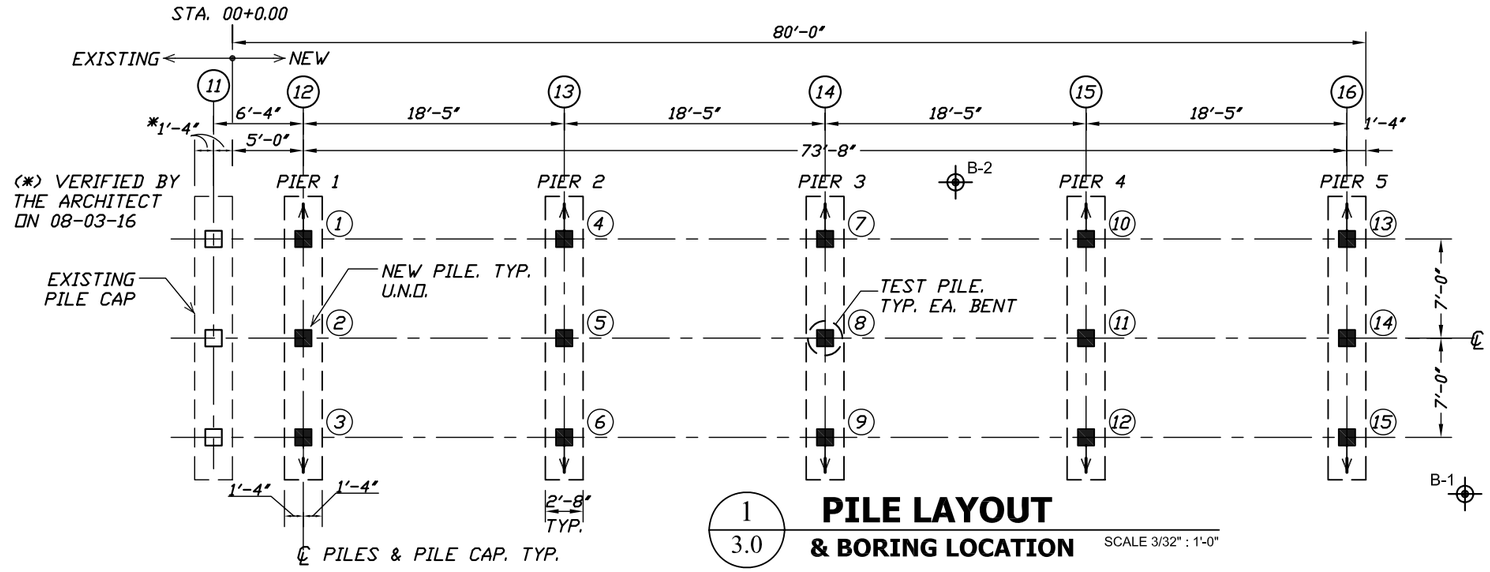

1 / 3.0 **PILE LAYOUT & BORING LOCATION**

SCALE 3/32" : 1'-0"

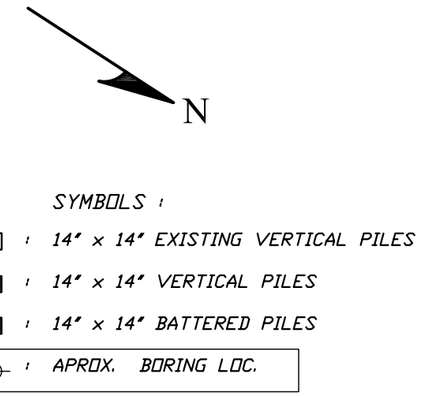

TABLE 1 - PILE DESIGN, PRODUCTION AND INSTALLATION CRITERIA								PILE DESIGN CRITERIA			
Pier or Bent #	Station at Gridline (ft)	Nominal Bearing Resistance (tons)	Min. Tip Elev. (ft)	Mud Line Elev. (ft)	Top of Rock (ft)	Req'd Preform Elev. (ft)	Test Pile Length (ft)	# PILES	Factored Design Loads (tons)	Resistance Factor ø	Pile Cutoff Elev. (ft)
1	0+05.000	TBD<60	-30.0	-14	-16.0	-26.0	35	3	TBD<39	0.65	2.783
2	0+23.417	60	-30.0	-14	-16.0	-26.0	35	3	39	0.65	2.783
3	0+41.833	60	-30.0	-14	-16.0	-26.0	35	3	39	0.65	2.783
4	0+60.250	60	-30.0	-14	-16.0	-26.0	35	3	39	0.65	2.783
5	0+78.667	TBD<60	-30.0	-14	-16.0	-26.0	35	3	TBD<39	0.65	2.783
							Total	15			

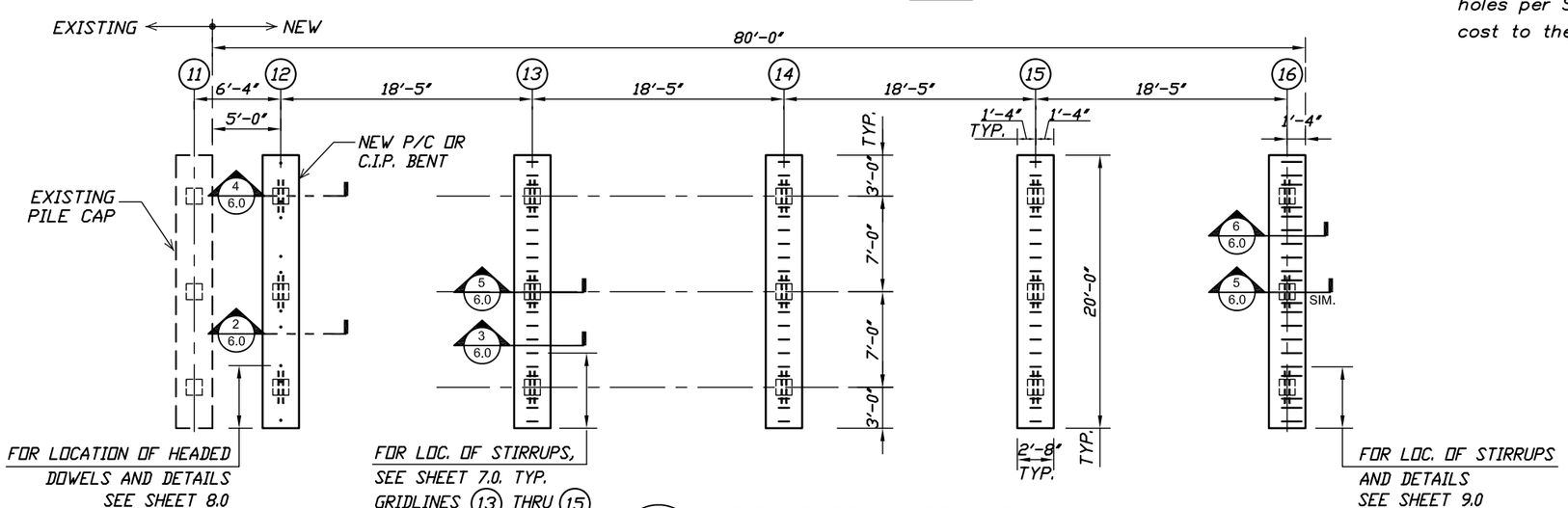

2 / 3.0 **BENT FRAMING PLAN**

SCALE 3/32" : 1'-0"

PILE INSTALLATION NOTES:

The minimum tip elevation is required for lateral stability.

Drive and monitor all Test Piles in the position of a permanent pile according to the geotechnical consultant recommendations, and section 455-5.13 of the FDOT specifications.

Pilot holes or preformed holes shall be drilled using a drill bit diameter not to exceed 18". If oversize holes are used, the contractor shall grout the preformed holes per SSRBC Section 455-5.9.5 at not additional cost to the owner.

REV	DESCRIPTION	DATE	BY

M. CORDERO & ASSOCIATES
STRUCTURAL ENGINEERS
CA # 6278
1227 LAKE MIRIAM DRIVE, LAKELAND, FLORIDA 33813
TEL. (863) 646-6277 FAX. (863) 533-1054
www.prestress.com/mca Web Page

PETER PIKE ASSOCIATES
Architects - Planners - Consultants
471 US HIGHWAY 1 SUITE 101
KEY WEST, FL 33040
305-296-1692

PILE LAYOUT & BENT FRAMING PLAN

JOB NAME: CITY OF KEY WEST PIER EXTENSION
LOCATION: 100 GRINNELL ST., KEY WEST, FLORIDA
ARCHITECT: PETER PIKE ASSOCIATES
CONTRACTOR:

DRAWN : K.C.
CHK'D. : M.C.
APPR. : M.C.
DATE : 08-11-16
RELEASED:

JOB NO: 071116

SHT: 3.0 OF: 11

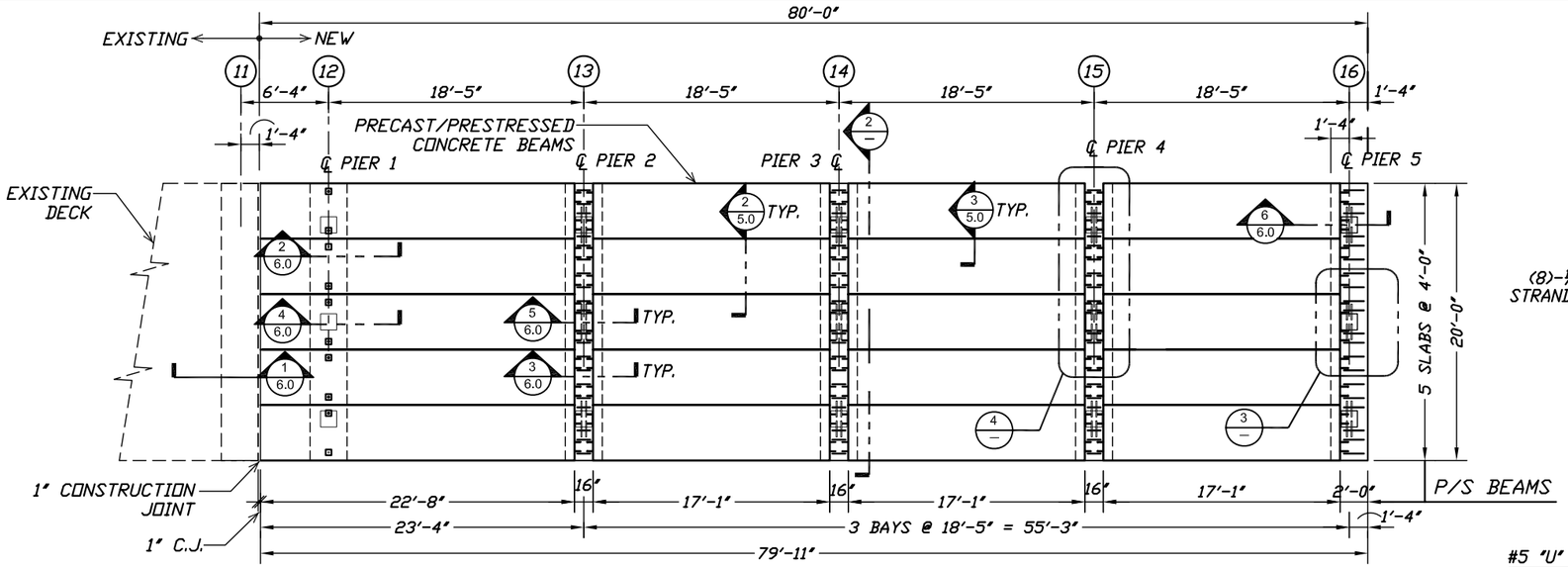

1 / 4.0 **P/S SLAB FRAMING PLAN**

SCALE 3/32" : 1'-0"

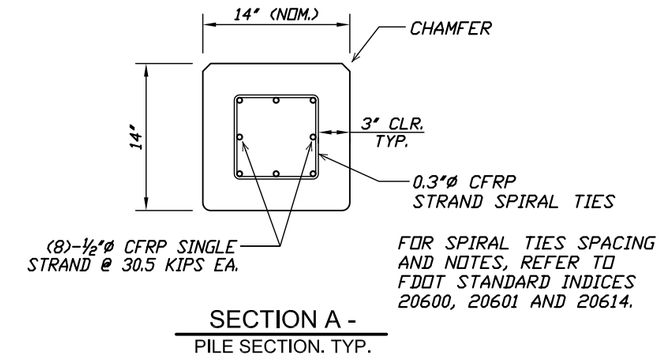

SECTION A -
PILE SECTION. TYP.

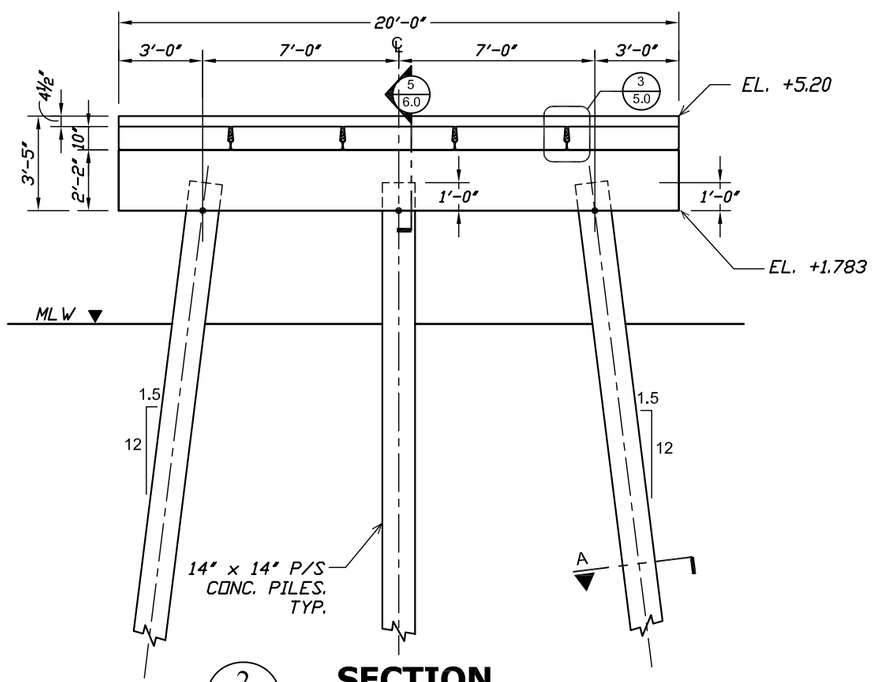

2 / 4.0 **SECTION**

SCALE 3/16" : 1'-0"

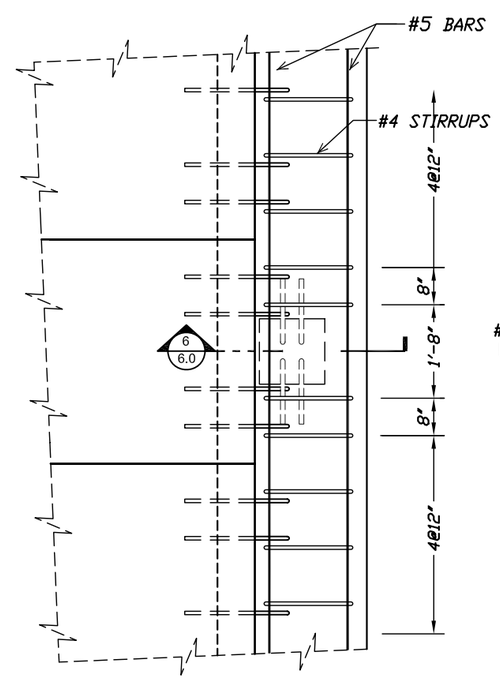

3 / 4.0 **FIELD REINF. DETAIL**

SCALE 3/8" : 1'-0"

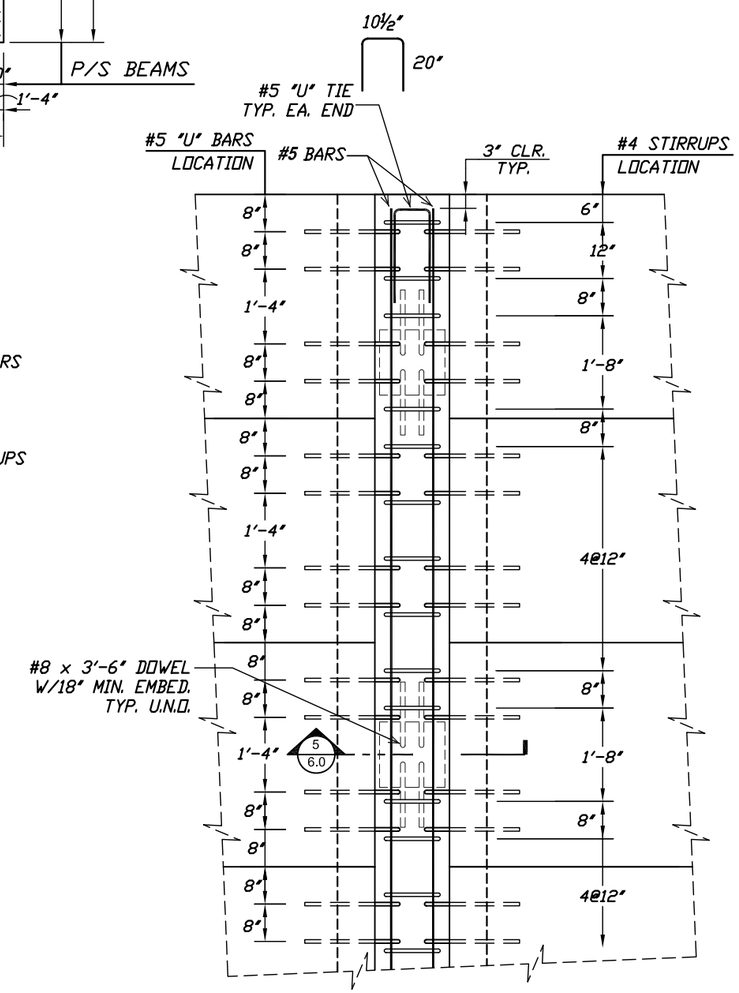

4 / 4.0 **FIELD REINF. DETAIL**

SCALE 3/8" : 1'-0"

REV	DESCRIPTION	DATE	BY
1	PILE REINFORCEMENT	4-10-17	M.C.

M. CORDERO & ASSOCIATES
STRUCTURAL ENGINEERS
CA # 6278
1227 LAKE MIRIAM DRIVE, LAKELAND, FLORIDA 33813
TEL. (863) 646-6277 FAX. (863) 533-1054
www.prestress.com/mca Web Page

PETER PIKE ASSOCIATES
Architects - Planners - Consultants
471 US HIGHWAY 1, SUITE 101
KEY WEST, FL 33040
305-296-1692

P/S BEAM FRAMING PLAN & DETAILS

JOB NAME: CITY OF KEY WEST PIER EXTENSION
LOCATION: 100 GRINNELL ST., KEY WEST, FLORIDA
ARCHITECT: PETER PIKE ASSOCIATES
CONTRACTOR:

DRAWN : K.C.
CHK'D. : M.C.
APPR. : M.C.
DATE : 08-11-16
RELEASED:

JOB NO: 071116

SHT: 4.0 OF: 11

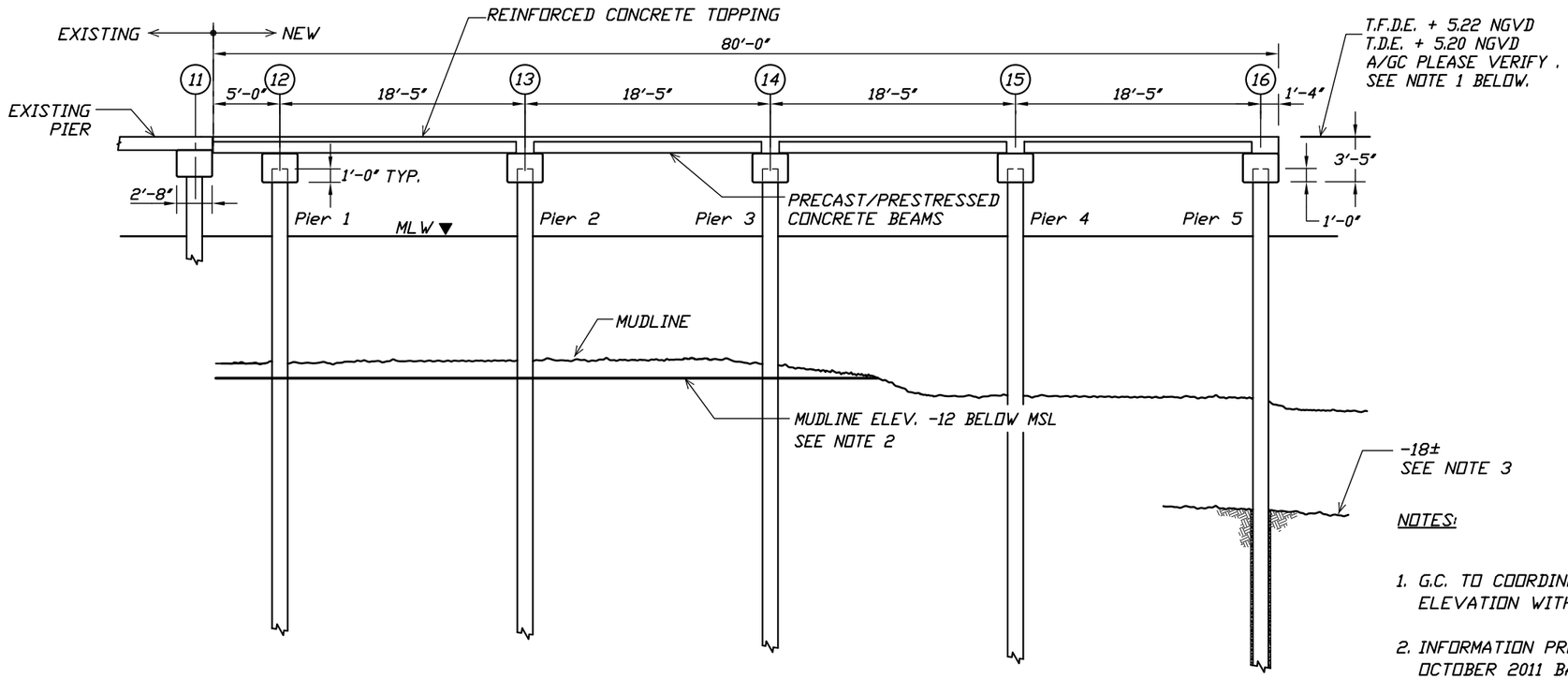

1
5.0

LONG. ELEVATION

SCALE 3/32" : 1'-0"

NOTES:

1. G.C. TO COORDINATE THE TOP OF STRUCTURAL DECK ELEVATION WITH THE ARCHITECTURAL DRAWINGS.

2. INFORMATION PROVIDED BY THE CITY OF KEY WEST IN OCTOBER 2011 BASED ON MAINTENANCE DREDGING. ARCHITECT/CITY OF KEY WEST, PLEASE VERIFY IF THIS INFORMATION IS STILL CURRENT.

3. APPROXIMATE BEDROCK ELEVATION, PER GEOTECHNICAL REPORT. REFER TO GENERAL NOTE N.1., DRAWING SHEET 1.0. FOR DETAILS.

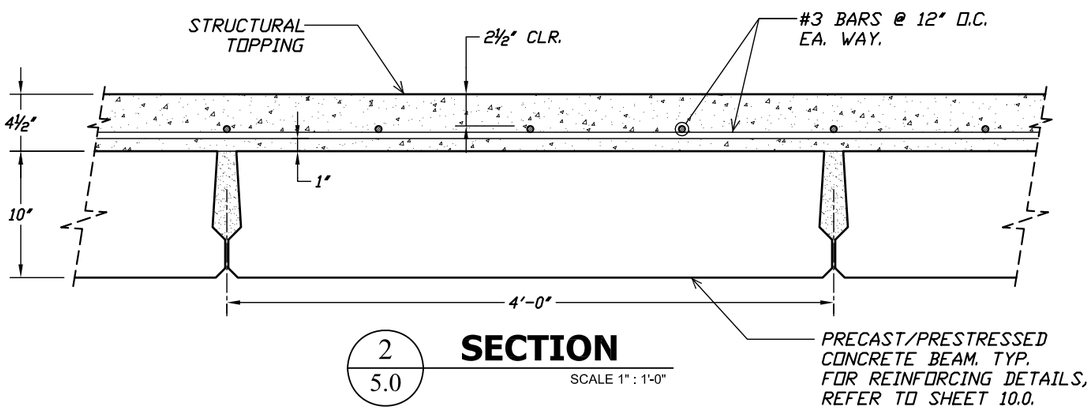

2
5.0

SECTION

SCALE 1" : 1'-0"

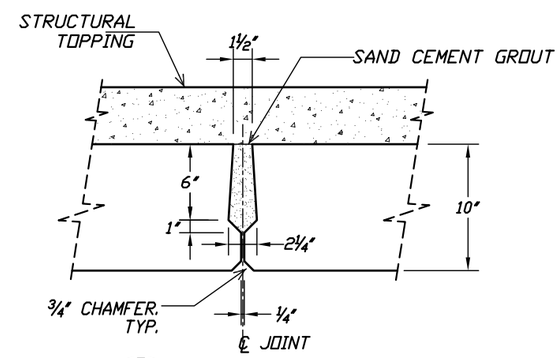

3
5.0

SHEAR KEY DETAIL. TYP.

SCALE 1" : 1'-0"

REV	DESCRIPTION	DATE	BY

M. CORDERO & ASSOCIATES
STRUCTURAL ENGINEERS
CA # 6278
1227 LAKE MIRIAM DRIVE, LAKELAND, FLORIDA 33813
TEL. (863) 646-6277 FAX. (863) 533-1054
www.prestress.com/mca Web Page

PETER PIKE ASSOCIATES
Architects - Planners - Consultants
471 US HIGHWAY 1 SUITE 101
KEY WEST, FL 33040
305-296-1692

GENERAL SECTIONS

JOB NAME: CITY OF KEY WEST PIER EXTENSION
LOCATION: 100 GRINNELL ST., KEY WEST, FLORIDA
ARCHITECT: PETER PIKE ASSOCIATES
CONTRACTOR:

DRAWN : K.C.
CHK'D. : M.C.
APPR. : M.C.
DATE : 08-11-16
RELEASED:

JOB NO: 071116

SHT: 5.0 OF: 11

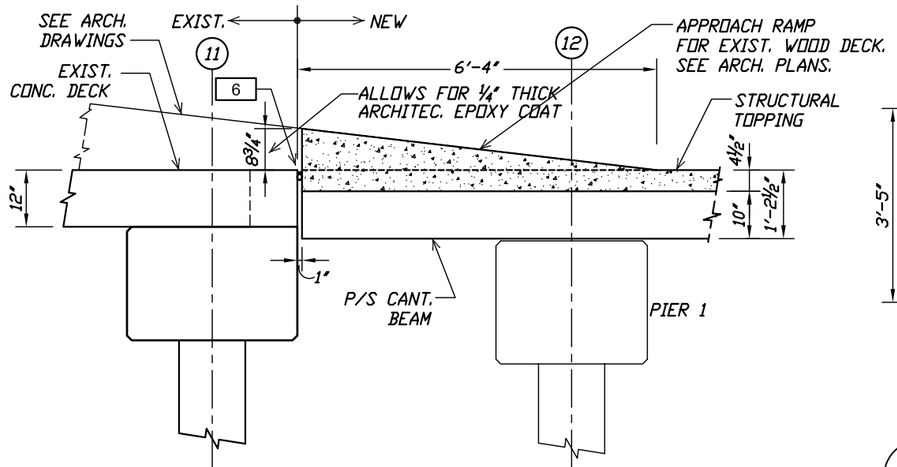

1 / 6.0 SECTION - BEGIN OF PIER EXTENSION

SOUTH VIEW

SCALE 3/8" : 1'-0"

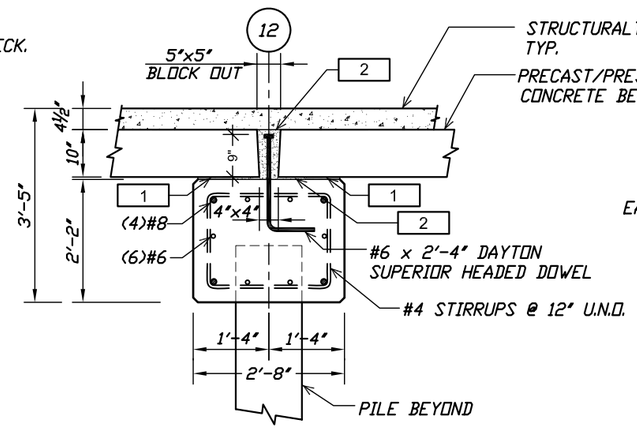

2 / 6.0 CAP SECTION AT GRIDLINE 12

AT PIER 1

SCALE 3/8" : 1'-0"

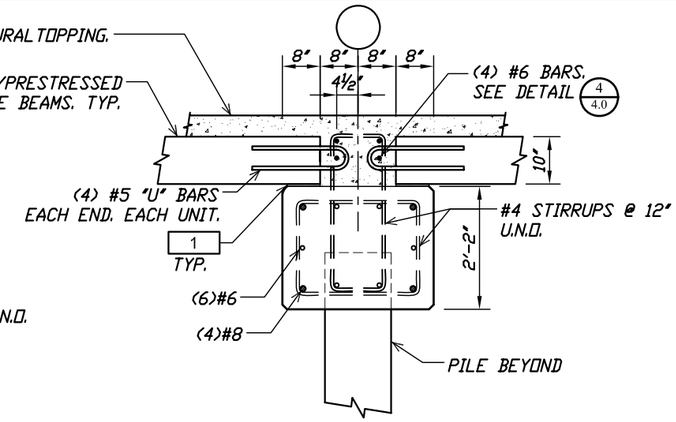

3 / 6.0 CAP SECTION TYP. 13 THRU 15

AT PIERS 2, 3 & 4

SCALE 3/8" : 1'-0"

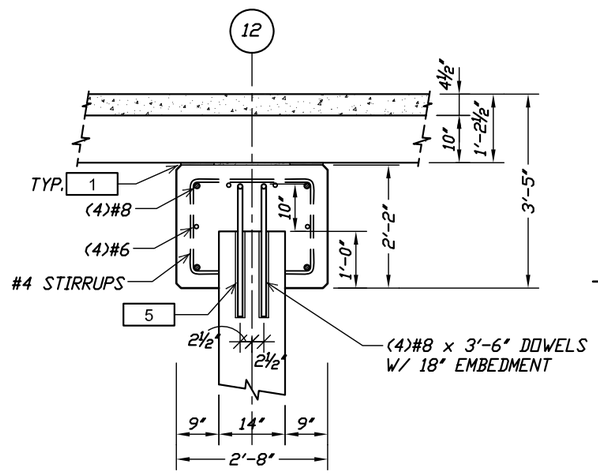

4 / 6.0 CAP SECTION AT PILE. GRID 12

AT PIER 1

SCALE 3/8" : 1'-0"

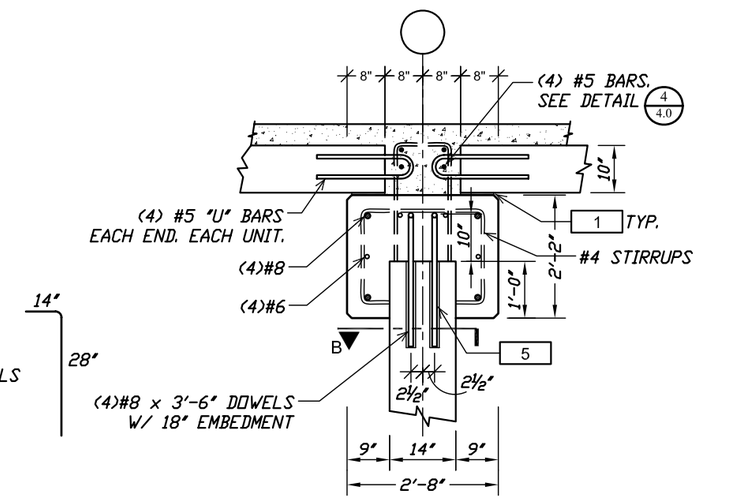

5 / 6.0 SECTION AT PILE. TYP. GRIDLINES 13 THRU 15

AT PIERS 2, 3 & 4

SCALE 3/8" : 1'-0"

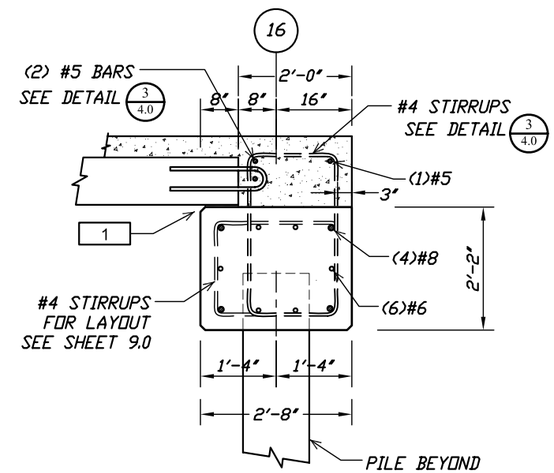

6 / 6.0 CAP SECTION AT GRIDLINE 16

AT PIER 5

SCALE 3/8" : 1'-0"

NOTATION :

1	5" WIDE x 1/2" THICK CONTINUOUS NEOPRENE STRIP
2	NON-SHRINK NON-METALLIC GROUT
5	EPOXY ADHESIVE, SIKADUR 31 HI-MOD GEL OR APPROVED EQUAL
6	SILICONE SEALANT AND BACKER ROD FROM FDOT QPL

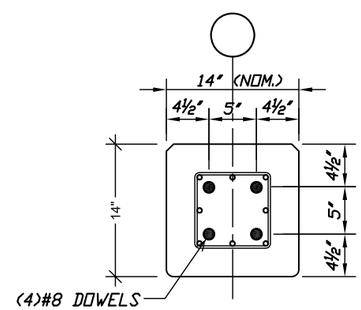

FOR PILE STRAND PATTERN SEE SECTION A ON SHEET 4.0

SECTION B - DOWEL LOCATION

REV	DESCRIPTION	DATE	BY

M. CORDERO & ASSOCIATES
STRUCTURAL ENGINEERS
CA # 6278
1227 LAKE MIRIAM DRIVE, LAKELAND, FLORIDA 33813
TEL. (863) 646-6277 FAX. (863) 533-1054
www.prestress.com/mca Web Page

PETER PIKE ASSOCIATES
Architects - Planners - Consultants
471 US HIGHWAY 1, SUITE 101
KEY WEST, FL 33040
305-296-1692

SECTIONS & DETAILS

JOB NAME: CITY OF KEY WEST PIER EXTENSION
LOCATION: 100 GRINNELL ST., KEY WEST, FLORIDA
ARCHITECT: PETER PIKE ASSOCIATES
CONTRACTOR:

DRAWN : K.C.
CHK'D. : M.C.
APPR. : M.C.
DATE : 08-11-16
RELEASED:

JOB NO: 071116

SHT: 6.0 OF: 11

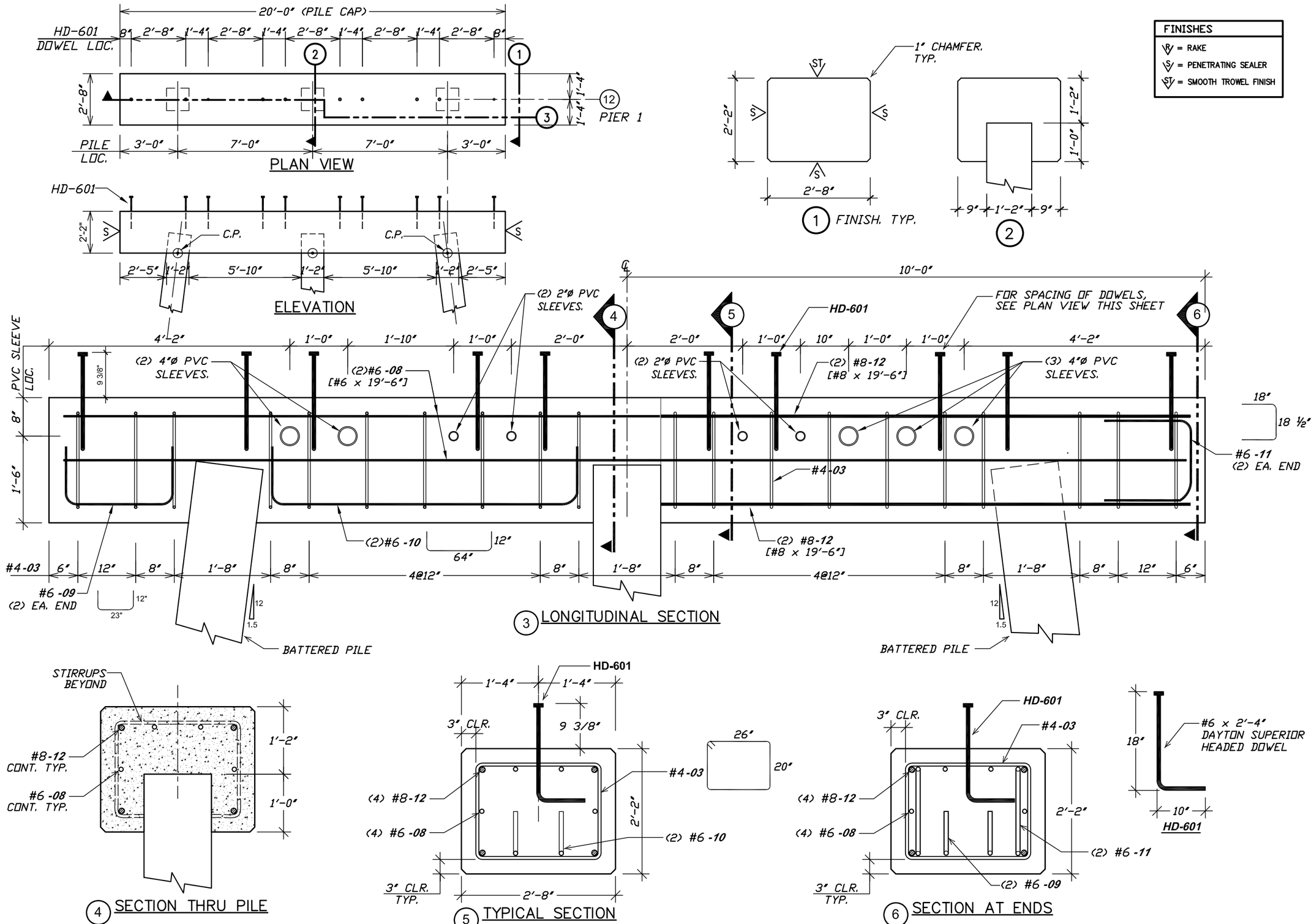

REV	DESCRIPTION	DATE	BY
1	SLEEVES	4-10-17	M.C.

M. CORDERO & ASSOCIATES
STRUCTURAL ENGINEERS
CA # 6278
1227 LAKE MIRIAM DRIVE, LAKELAND, FLORIDA 33813
TEL. (863) 646-6277 FAX. (863) 533-1054
www.prestress.com/mca Web Page

PETER PIKE ASSOCIATES
Architects - Planners - Consultants
471 US HIGHWAY 1 SUITE 101
KEY WEST, FL 33040
305-296-1692

PILE CAP REINFORCING AT PIER 1

JOB NAME: CITY OF KEY WEST PIER EXTENSION
LOCATION: 100 GRINNELL ST., KEY WEST, FLORIDA
ARCHITECT: PETER PIKE ASSOCIATES
CONTRACTOR:

DRAWN : K.C.
CHK'D. : M.C.
APPR. : M.C.
DATE : 08-11-16
RELEASED:

JOB NO: 071116

SHT: 7.0 OF: 11

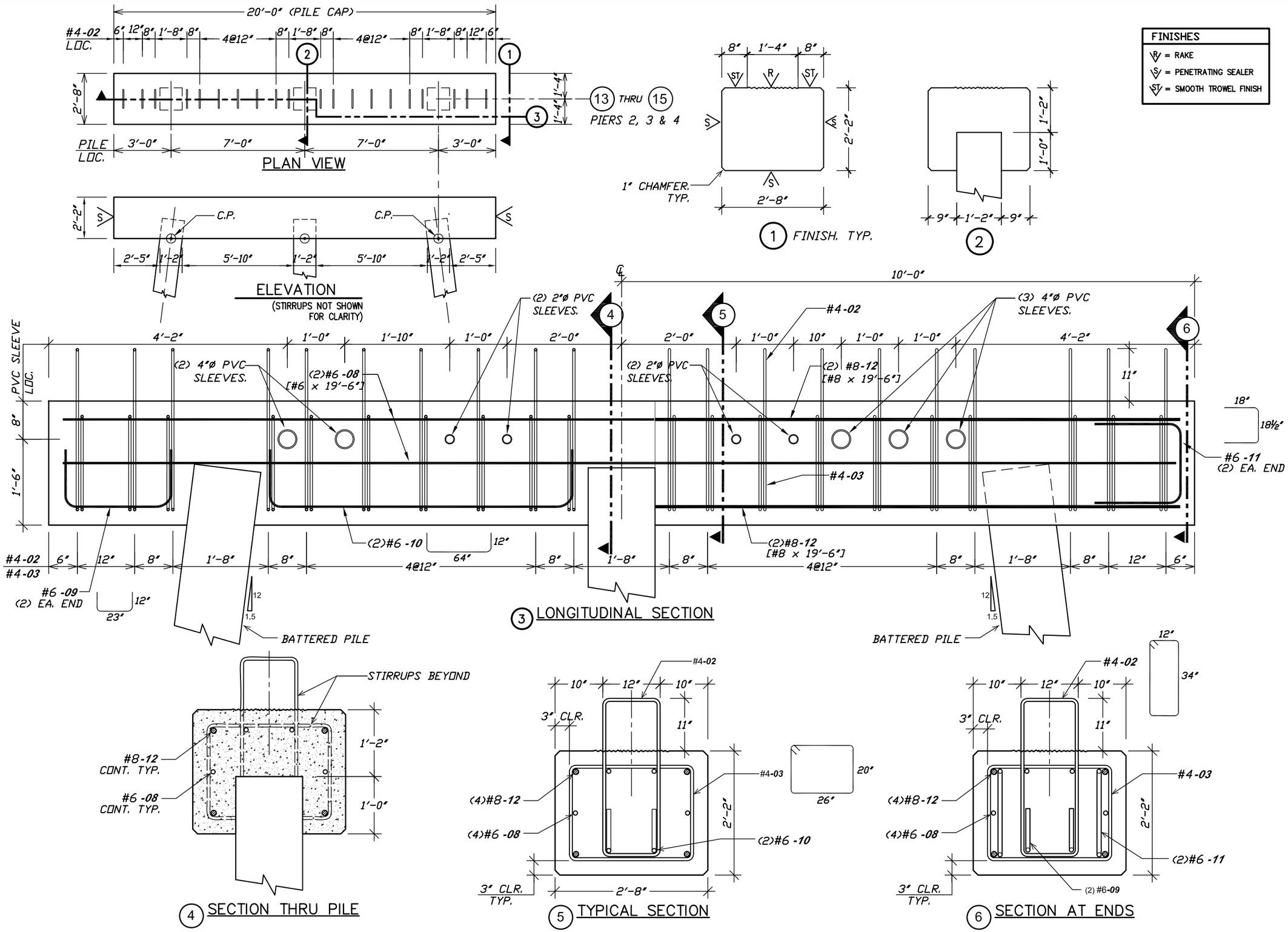

REV	DESCRIPTION	DATE	BY
1	SLEEVES	4-10-17	M.C.

M. CORDERO & ASSOCIATES
STRUCTURAL ENGINEERS
CA # 6278
1227 LAKE MIRIAM DRIVE, LAKELAND, FLORIDA 33813
TEL. (863) 646-6277 FAX. (863) 533-1054
www.prestress.com/mca Web Page

PETER PIKE ASSOCIATES
Architects - Planners - Consultants
471 US HIGHWAY 1 SUITE 101
KEY WEST, FL 33040
305-296-1692

PILE CAP REINFOR. @ PIERS 2, 3 & 4

JOB NAME: CITY OF KEY WEST PIER EXTENSION
LOCATION: 100 GRINNELL ST., KEY WEST, FLORIDA
ARCHITECT: PETER PIKE ASSOCIATES
CONTRACTOR:

DRAWN : K.C.
CHK'D. : M.C.
APPR. : M.C.
DATE : 08-11-16
RELEASED:

JOB NO: 071116

SHT: 8.0 OF: 11

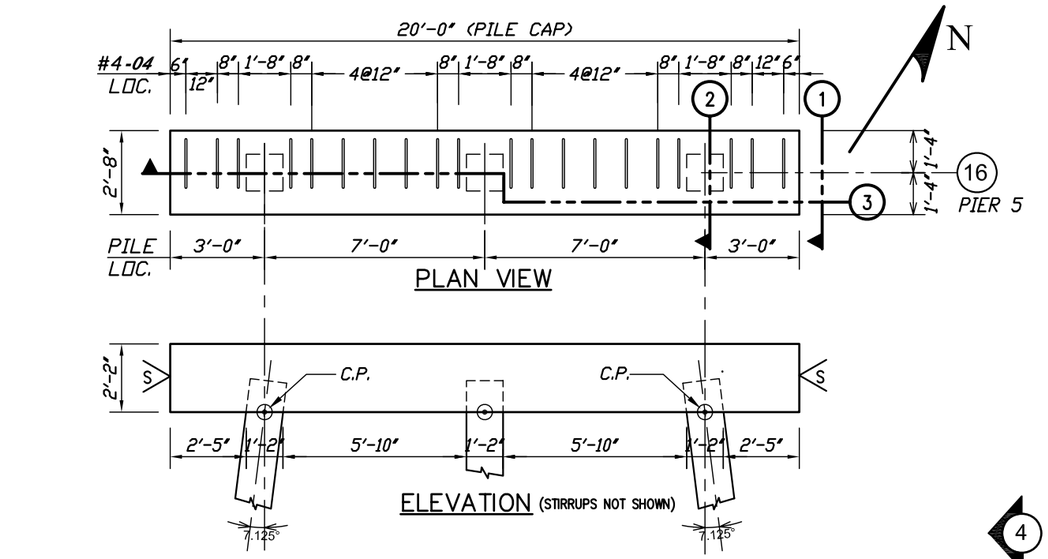

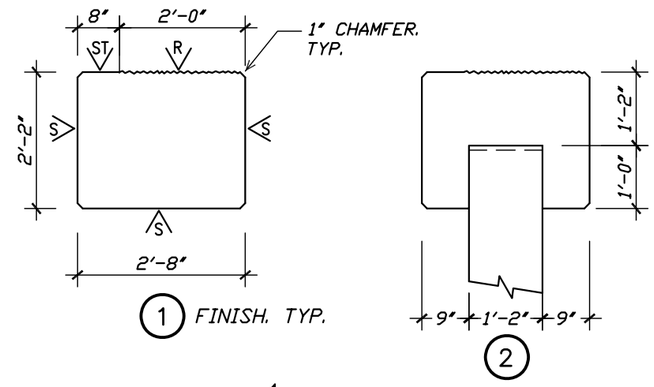

FINISHES
R = RAKE
S = PENETRATING SEALER
ST = SMOOTH TROWEL FINISH

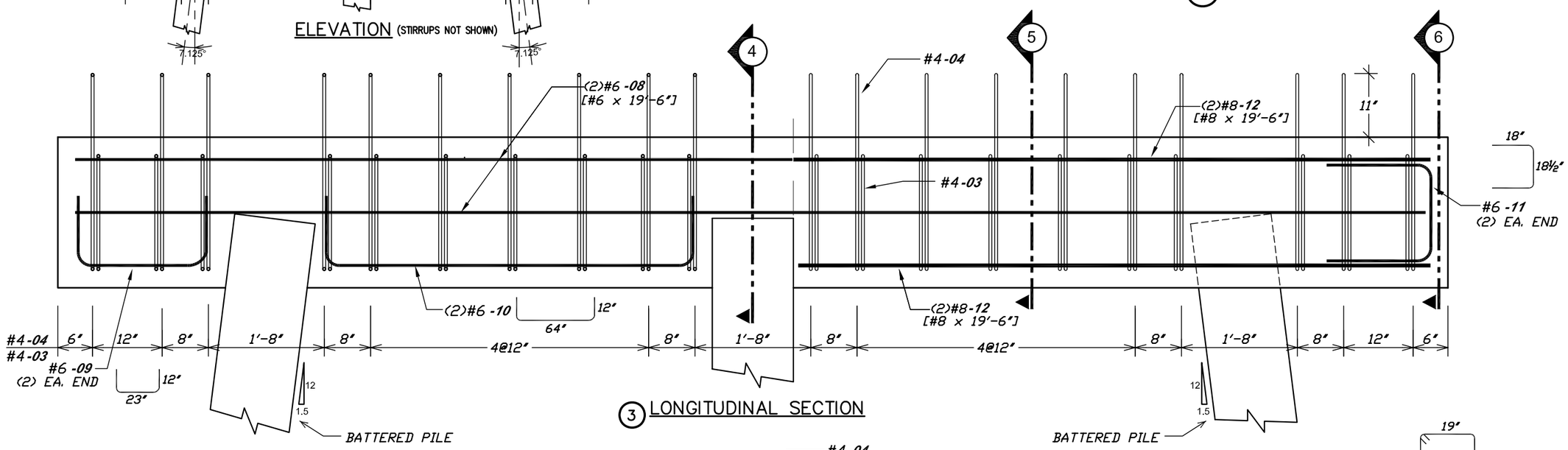

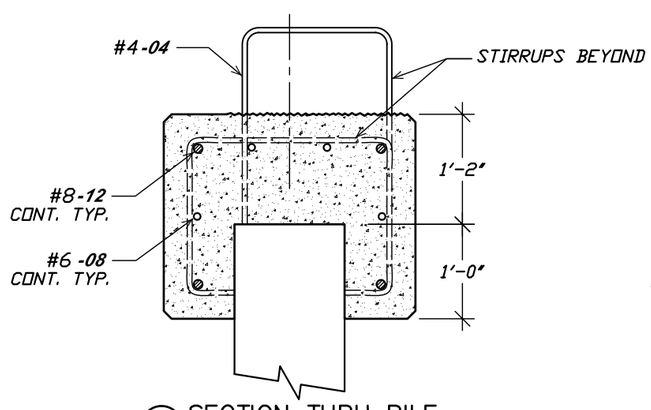

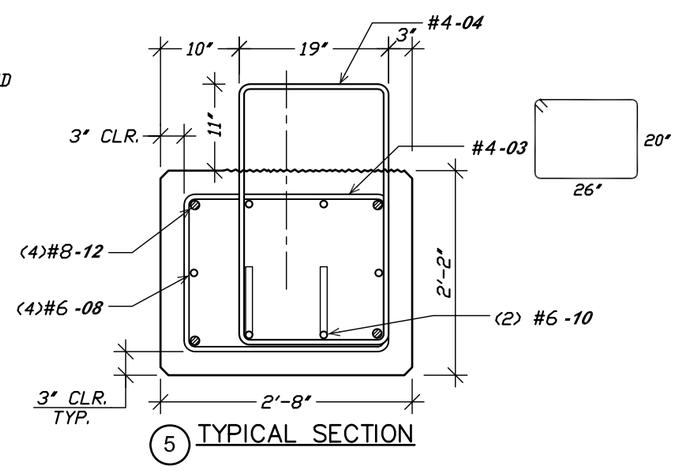

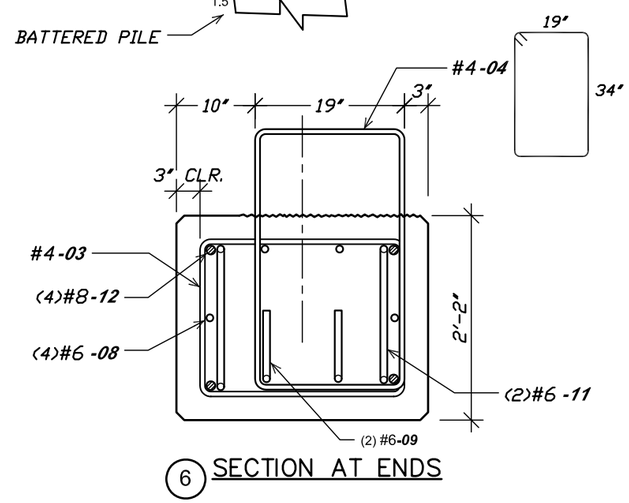

REV	DESCRIPTION	DATE	BY

M. CORDERO & ASSOCIATES
STRUCTURAL ENGINEERS
CA # 6278
1227 LAKE MIRIAM DRIVE, LAKELAND, FLORIDA 33813
TEL. (863) 646-6277 FAX. (863) 533-1054
www.prestress.com/mca Web Page

PETER PIKE ASSOCIATES
Architects - Planners - Consultants
471 US HIGHWAY 1 SUITE 101
KEY WEST, FL 33040
305-296-1692

PILE CAP REINFORCING AT PIER 5

JOB NAME: CITY OF KEY WEST PIER EXTENSION
LOCATION: 100 GRINNELL ST., KEY WEST, FLORIDA
ARCHITECT: PETER PIKE ASSOCIATES
CONTRACTOR:

DRAWN : K.C.
CHK'D. : M.C.
APPR. : M.C.
DATE : 08-11-16
RELEASED:

JOB NO: 071116

SHT: 9.0 OF: 11

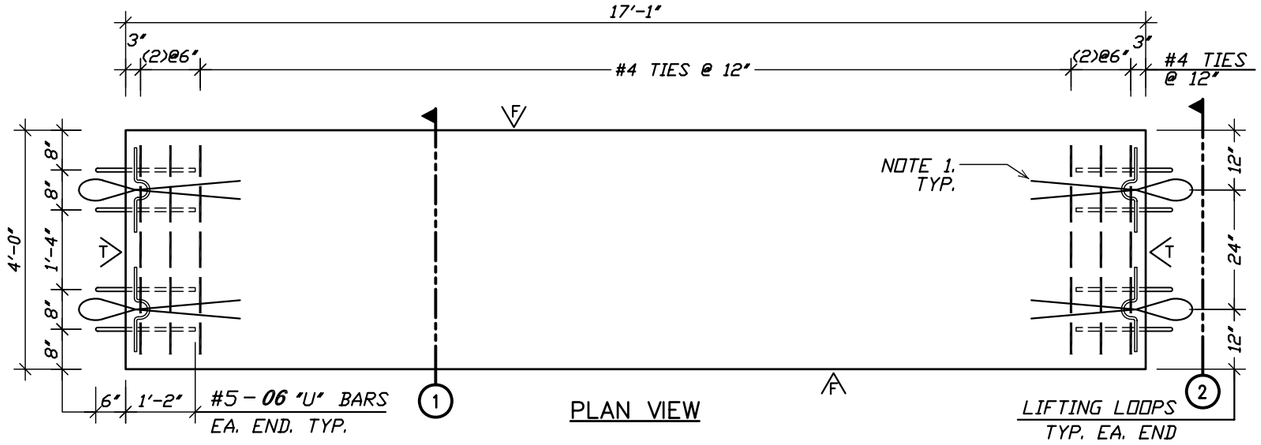

TYPICAL BEAM

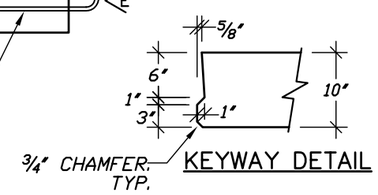

KEYWAY DETAIL

NOTES:

1. PRECAST MANUFACTURER TO SUBMIT SIGNED AND SEALED SHOP DRAWINGS AND LIFTING DESIGN CALCULATIONS.

FINISHES

- B = LIGHT BROOM FINISH
- F = SMOOTH FORM FINISH
- T = AS CAST
- R = RAKE TO 1/4" AMPLITUDE
- E = COAT STRANDS W/EPOXY
- S = PENETRATING SEALER. SEE GENERAL NOTE F.1

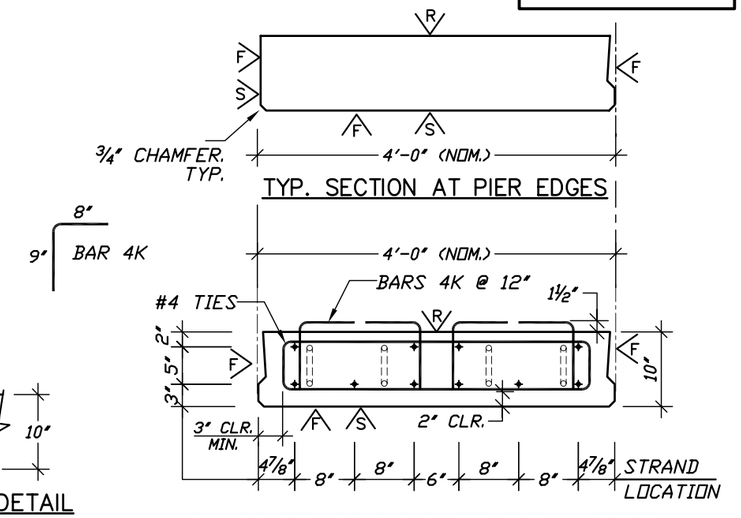

(6) 1/2" STRANDS @ 31.0 KIPS EACH - BOTTOM
(4) 1/2" STRANDS @ 20.0 KIPS EACH - TOP
(10) TOTAL

1 TYPICAL CROSS SECTION

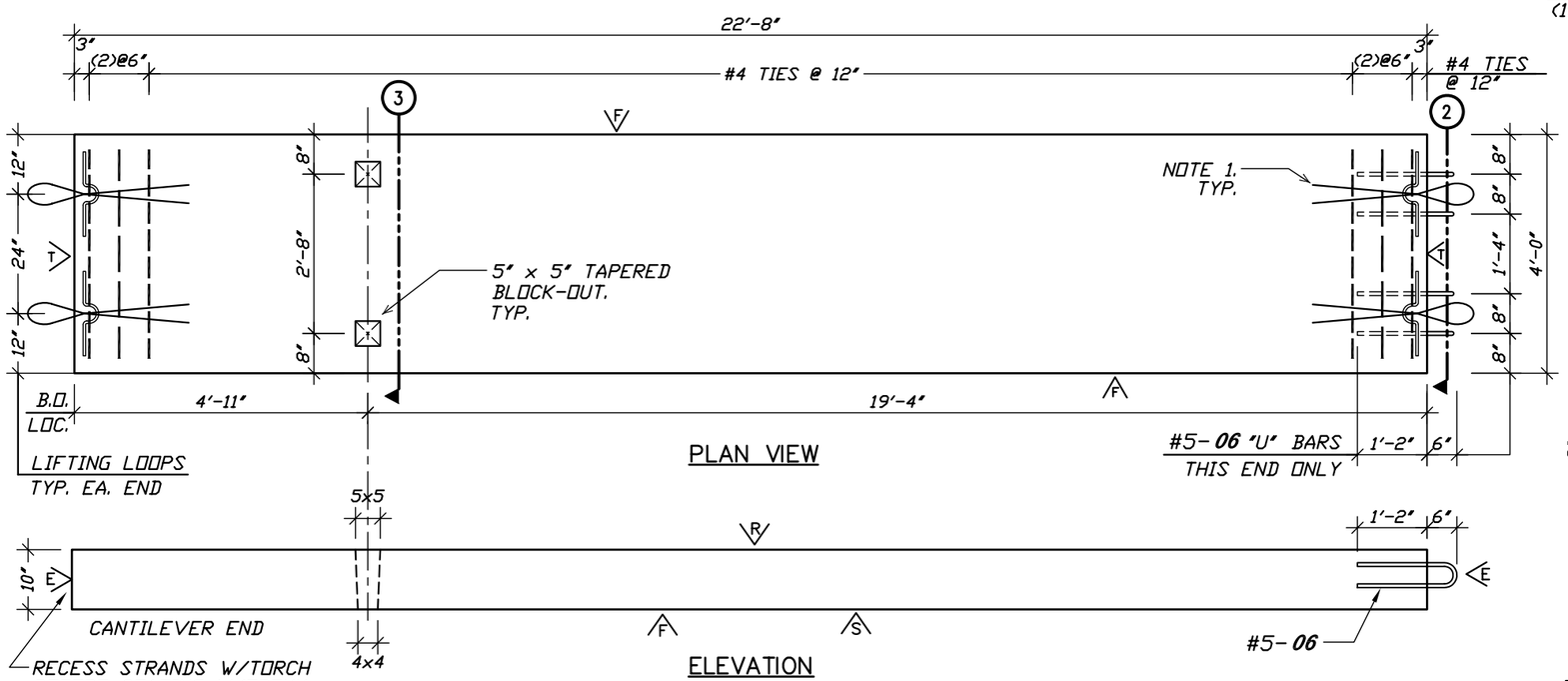

CANTILEVER BEAM

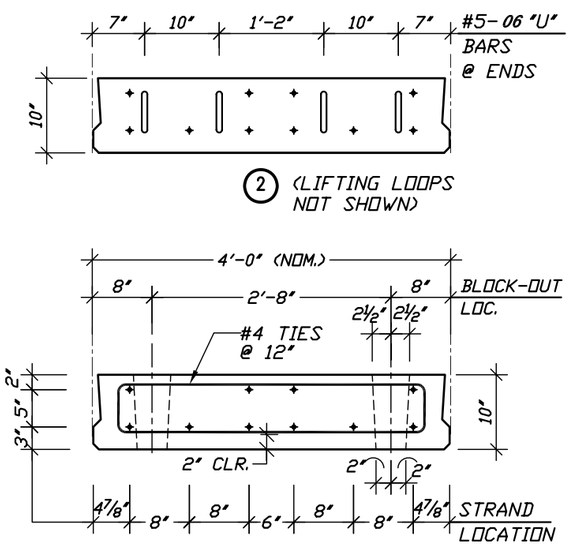

(6) 1/2" STRANDS @ 31.0 KIPS EACH - BOTTOM
(4) 1/2" STRANDS @ 20.0 KIPS EACH - TOP
(10) TOTAL

2 (LIFTING LOOPS NOT SHOWN)

3 CANT. END SECTION

REV	DESCRIPTION	DATE	BY

M. CORDERO & ASSOCIATES
STRUCTURAL ENGINEERS
CA # 6278
1227 LAKE MIRIAM DRIVE, LAKELAND, FLORIDA 33813
TEL. (863) 646-6277 FAX. (863) 533-1054
www.prestress.com/mca Web Page

PETER PIKE ASSOCIATES
Architects - Planners - Consultants
471 US HIGHWAY 1 SUITE 101
KEY WEST, FL 33040
305-296-1692

PRESTRESSED BEAMS REINFORCING

JOB NAME: CITY OF KEY WEST PIER EXTENSION
LOCATION: 100 GRINNELL ST., KEY WEST, FLORIDA
ARCHITECT: PETER PIKE ASSOCIATES
CONTRACTOR:

DRAWN : K.C.
CHK'D. : M.C.
APPR. : M.C.
DATE : 08-11-16
RELEASED:

JOB NO: 071116

SHT: 10.0 OF: 11

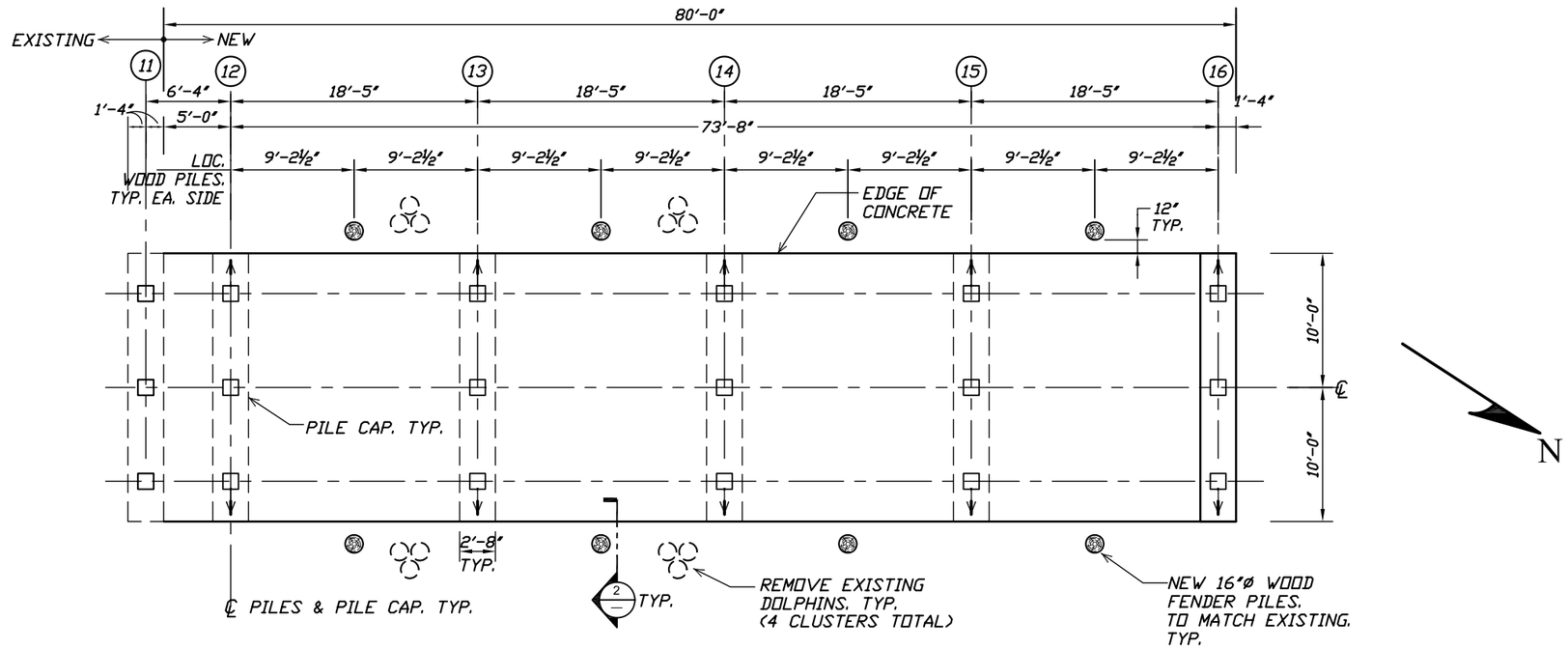

1 / 11.0 WOOD PILES LAYOUT

SCALE 3/32" : 1'-0"

SYMBOLS :

: EXISTING CLUSTER DOLPHIN PILES TO BE REMOVED

: NEW 16"Ø WOOD FENDER PILES (TOTAL: 8)

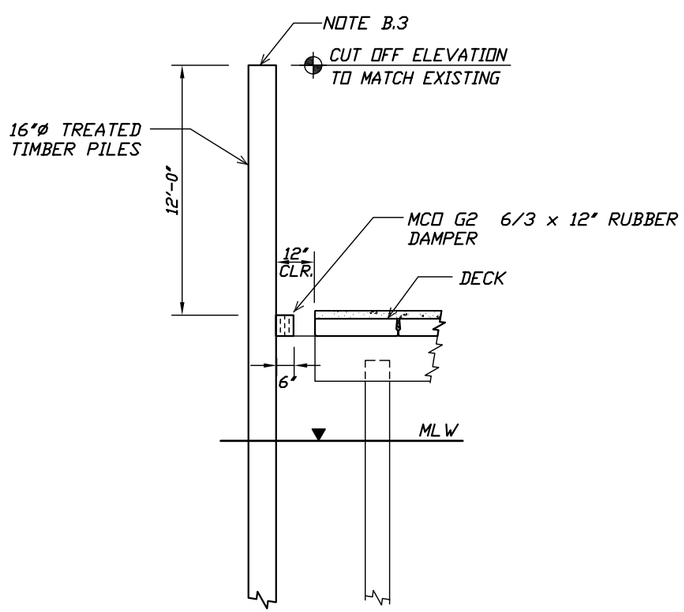

2 / 11.0 FENDER PILE

WOOD PILE GENERAL NOTES:

A) MATERIAL SPECIFICATIONS:

1. WOOD PILES SHALL COMPLY WITH SECTION 953 OF FDOT STANDARD SPECIFICATIONS.
2. ALL PILES SHALL BE TREATED FOR MARINE APPLICATIONS PER SECTION 955 OF FDOT STANDARD SPECIFICATIONS.

B) INSTALLATION:

1. PRE-DRILLING AND GROUTING OF THE PREFORMED PILE HOLES SHALL BE INCLUDED IN THE BID PRICE.
2. THE MINIMUM PENETRATION DEPTH OF THE WOOD PILES INTO THE LIMESTONE BEDROCK SHALL BE 8 FEET.
3. PILE CUT OFF SURFACES SHALL BE TREATED WITH A LIBERAL APPLICATION OF COOPER NAPHTHENATE.

REV	DESCRIPTION	DATE	BY
1	END WOOD FENDER PILES DELETED	4-10-17	M.C.

M. CORDERO & ASSOCIATES
STRUCTURAL ENGINEERS
CA # 6278
1227 LAKE MIRIAM DRIVE, LAKELAND, FLORIDA 33813
TEL. (863) 646-6277 FAX. (863) 533-1054
www.prestress.com/mca Web Page

PETER PIKE ASSOCIATES
Architects - Planners - Consultants
471 US HIGHWAY 1 SUITE 101
KEY WEST, FL 33040
305-296-1692

WOOD FENDER PILES & DOLPHINS

JOB NAME: CITY OF KEY WEST PIER EXTENSION
LOCATION: 100 GRINNELL ST., KEY WEST, FLORIDA
ARCHITECT: PETER PIKE ASSOCIATES
CONTRACTOR:

DRAWN : K.C.
CHK'D. : M.C.
APPR. : M.C.
DATE : 08-11-16
RELEASED:

JOB NO: 071116

SHT: 11.0 OF: 11

ELECTRICAL CONSTRUCTION NOTES

1. ALL WORK SHALL BE IN ACCORDANCE WITH THE NATIONAL ELECTRICAL CODE (NEC), LATEST EDITION, AND APPLICABLE STATE AND LOCAL ORDINANCES. EACH PIECE OF ELECTRICAL EQUIPMENT INSTALLED SHALL BEAR A.U.L. LABEL. ALL WORK SHALL BE PERFORMED IN COMPLIANCE WITH THE OCCUPATIONAL SAFETY AND HEALTH ACT (OSHA) LATEST EDITION.
2. THE ELECTRICAL CONTRACTOR SHALL ARRANGE AND PAY FOR ALL PERMITS, FEES, INSPECTIONS, ETC., AND CARRY ALL INSURANCE AS REQUIRED BY LAW PRIOR TO STARTING CONSTRUCTION.
3. THE ELECTRICAL CONTRACTOR SHALL PROVIDE ALL NECESSARY LABOR, MATERIALS, TRANSPORTATION, RIGGING, TOOLS, STORAGE, ETC., FOR ALL WORK INDICATED AND REQUIRED FOR A COMPLETE INSTALLATION.
4. THE ELECTRICAL WORK SHALL INCLUDE COMPLETE TESTING OF ALL EQUIPMENT AND WIRING. WORKMANSHIP SHALL BE THE HIGHEST QUALITY AS ESTABLISHED BY TRADE STANDARDS.
5. ELECTRICAL CONTRACTOR SHALL KEEP A MASTER SET OF BLUE LINES THAT ARE TO BE MARKED UP TO REFLECT "AS BUILT" CONDITIONS ON A DAILY BASIS. THESE "AS BUILT" MARK UPS MAY BE REVIEWED BY THE ARCHITECT, ENGINEER OR OWNER'S REPRESENTATIVE AT THEIR REQUEST WITHOUT PRIOR NOTIFICATION. THESE "AS BUILT" MARK UPS WILL BE REVIEWED BY THE ENGINEER AND TURNED OVER TO THE OWNER AT THE CONCLUSION OF THE PROJECT.
6. THE ELECTRICAL CONTRACTOR SHALL BE RESPONSIBLE FOR COMMUNICATION WITH THE LOCAL BUILDING DEPARTMENT AND INSPECTION PERSONNEL TO REVIEW CONTRACT DOCUMENTS PRIOR TO INSTALLATION.
7. THE OWNER WILL NOT BE HELD LIABLE FOR FIELD CHANGES THAT ARISE FROM CONTRACTOR ERROR OR OMISSION OF MATERIALS OR WORKMANSHIP IN WORK PERFORMANCE.
8. THE ELECTRICAL CONTRACTOR SHALL MAKE ALL NECESSARY ARRANGEMENTS WITH THE LOCAL POWER COMPANY FOR SERVICE AND SHALL BE RESPONSIBLE FOR VERIFICATION OF ALL UTILITIES AND THE PLACEMENT LOCATION OF THE ELECTRICAL SERVICE AND EQUIPMENT. THE ELECTRICAL CONTRACTOR SHALL PAY ALL NECESSARY CHARGES TO THE POWER COMPANY PRIOR TO CONSTRUCTION.
9. ALL ELECTRICAL EQUIPMENT, MATERIALS AND WORKMANSHIP SHALL BE GUARANTEED FOR A PERIOD OF ONE (1) YEAR FROM DATE OF ACCEPTANCE.
10. IN GENERAL, PLANS AND DIAGRAMS ARE SCHEMATIC ONLY AND SHOULD NOT BE SCALED. CO-ORDINATE ALL ELECTRICAL WORK WITH OTHER TRADES, (PLUMBING, HVAC, ETC.) SO AS NOT TO CONFLICT IN LOCATIONS OR PERFORMANCE OF OTHER SYSTEMS.
11. NECESSARY, OBVIOUSLY REQUIRED ELECTRICAL ITEMS THAT ARE NOT SHOWN ON THE DRAWINGS, DOES NOT RELIEVE THE CONTRACTOR OF HIS RESPONSIBILITY TO INSTALL A COMPLETE AND SAFE ELECTRICAL SYSTEM.
12. THE ELECTRICAL CONTRACTOR SHALL CO-ORDIANTE WITH OTHER TRADES SO THAT INTERFERENCE BETWEEN CONDUITS, RACEWAYS, DUCTS, PIPING AND STRUCTURAL MEMBERS WILL BE AVOIDED.
13. THE ELECTRICAL CONTRACTOR SHALL FURNISH, INSTALL AND CONNECT ALL WIRING IN ACCORDANCE WITH THE WIRING DIAGRAMS FOR POWER AND CONTROL OF ALL AIR CONDITIONING, HEATING AND VENTILATING EQUIPMENT AS PROVIDED BY THE HVAC CONTRACTOR.
14. WIRE AND CABLE SHALL BE 600 VOLT MINIMUM AWG. #12. ALL WIRING SHALL BE TYPE TW, THN OF THHN AS NECESSARY TO MEET ALL APPLICABLE CODES.
15. ALL WIRE AND CABLE SHALL BE IN A CONDUIT, MINIMUM SIZE 1/2" WITH LARGER SIZES AS INDICATED OR REQUIRED BY NEC. ALL SERVICE AND PANELBOARD FEEDER CONDUITS, CONDUITS IN OR BELOW FLOOR, IN DAMP AND WET LOCATIONS, IN CONCRETE AND LARGER THAN TWO INCHES SHALL BE RIGID GALVANIZED STEEL.

    ALL CONDUCTORS, UNLESS OTHERWISE NOTED, SHALL BE COPPER RUN IN APPROVED METAL RACEWAY. METAL RACEWAY PENETRATING FLOORS AND FIRE RATED PARTITIONS SHALL BE SEALED AIR TIGHT WITH MATERIAL RATED EQUAL TO THE PENETRATED MATERIAL.

    FURNISH AND INSTALL ALL BRANCH CIRCUITS. CIRCUITS SHALL BE #12 WIRE IN 1/2" CONDUIT UNLESS OTHERWISE NOTED. THESE ARE MINIMUM WIRE AND CONDUIT SIZES. ALL WIRE SHALL BE COPPER. NO ALUMINUM CONDUCTORS WILL BE PERMITTED.
16. ALL NEW RACEWAYS / CONDUITS SHALL BE METALLIC MINIMUM SIZE 1/2"; SUPPORTED AT INTERVALS NOT TO EXCEED EIGHT (8) FEET; ALL FITTINGS SHALL BE COMPRESSION TYPE, NO SET SCREW TYPE FITTINGS WILL BE PERMITTED.
17. IN NO CASE MAY EMT OR FLEXIBLE CONDUIT BE RUN FROM FIXTURE TO FIXTURE WITHOUT THE USE OF OUTLET BOXES.
18. FLEXIBLE CONDUIT CAN ONLY BE USED FOR SHORT (MAXIMUM SIX FEET) FINAL CONNECTIONS TO INTERIOR LIGHTING FIXTURES AND EQUIPMENT.
19. THE ELECTRICAL CONTRACTOR SHALL FOLLOW THE SAME COLOR CODE IDENTIFICATION FOR EACH PHASE THROUGHOUT THE SYSTEM FROM SERVICE SWITCH OR TRANSFORMER THROUGH ALL BRANCH CIRCUITS.
20. ALL SLAB OR ROOF PENETRATIONS SHALL BE WITH APPROVED FIRE RATED AND SMOKE BARRIER FITTINGS. PROVIDE ACCESSORIES (PITCH, POCKETS, CONCRETE, ETC.) AS REQUIRED.
21. ALL CONDUITS SHALL BE RUN CONCEALED WHERE POSSIBLE. EXPOSED CONDUITS SHALL BE RUN PARALLEL AND /OR PERPENDICULAR TO BUILDING CONSTRUCTION.
22. CONDUIT MAY NOT BE RUN IN DUCTWORK.
23. THE ELECTRICAL CONTRACTOR SHALL FURNISH AND INSTALL A 3/4" EMPTY CONDUIT FROM EACH TELEPHONE OUTLET TO THE OWNER'S TELEPHONE BOARD, WITH PULL WIRE. PROVIDE ALL REQUIRED CONDUIT FROM OWNER'S TELEPHONE BOARD TO BUILDING'S TELEPHONE ROOM, PROVIDE PULL BOXES AND PULL WIRE AS REQUIRED. VERIFY EXACT LOCATION OF EXISTING TELEPHONE SERVICE AND CONDUITS. CO-ORDINATE ALL WORK WITH OTHER TRADES AND TELEPHONE COMPANY.
24. THE ELECTRICAL CONTRACTOR SHALL PROVIDE AND INSTALL ALL CONDUIT, BOXES, FITTINGS, PULL WIRE, ETC., REQUIRED FOR ALL MISCELLANEOUS SYSTEMS PER OWNER'S REQUIREMENTS. CO-ORDINATE EXACT LOCATIONS AND REQUIREMENTS WITH OWNER.
25. ALL COMMUNICATION AND CONTROL WIRING SHALL BE IN CONDUIT.
26. FURNISH AND INSTALL PANELBOARDS OF AMPACITIES SHOWN ON PLANS. PANELS SHALL BE CIRCUIT BREAKER TYPE, WITH MAIN LUGS AND BRANCH CIRCUIT BREAKERS AS SCHEDULED. ALL ELECTRICAL PANELS AND EQUIPMENT SHALL BE U.L. LISTED AND APPROVED FOR SUCH USE. PANELS SHALL BE BOLT-ON TYPE AS MANUFACTURED BY SQUARE D OR APPROVED EQUAL.
27. ALL EQUIPMENT SHALL BE PROPERLY GROUNDED IN ALL RACEWAYS, BRANCH CIRCUITS & FEEDERS, PER LOCAL ELECTRICAL CODES AND THE NEC.
28. THE ELECTRICAL CONTRACTOR SHALL CO-ORDINATE ALL RECEPTACLE AND OUTLET LOCATIONS WITH ARCHITECTURAL DRAWINGS AND GENERAL CONTRACTOR BEFORE ROUGH IN.
29. ALL LIGHTING FIXTURES SHALL BE SELECTED BY THE OWNER AND INSTALLED BY THE ELECTRICAL CONTRACTOR. (LIGHTING FIXTURES INDICATED ON DRAWINGS AND SCHEDULES ARE FOR REFERENCE ONLY. FIXTURES OF EQUAL QUALITY MAY BE USED AS DIRECTED.)
30. ALL TEMPORARY ELECTRICAL SERVICE REQUIRED FOR CONSTRUCTION SHALL BE FURNISHED BY THE ELECTRICAL CONTRACTOR. FOLLOWING CONSTRUCTION, ALL TEMPORARY WIRING AND EQUIPMENT SHALL BE REMOVED WHEN DIRECTED BY THE GENERAL CONTRACTOR. ELECTRIC OUTLETS, CORDS, LIGHTS, LIGHTING LEVELS, ETC., SHALL CONFORM TO O.S.H.A AND LOCAL ORDINANCES.
31. ALL ELECTRICAL EQUIPMENT EXPOSED TO WEATHER SHALL BE WEATHERPROOF AND ALL CONDUIT EXPOSED TO WEATHER SHALL BE HEAVY WALL GALVANIZED STEEL.
32. SUBMIT SIX COMPLETE COPIES OF SHOP DRAWINGS AND PRODUCT DATA TO LIGHTING FIXTURES, ELECTRICAL PANELS, SERVICE EQUIPMENT, WIRING DEVICES AND DISCONNECT SWITCHES.

ELECTRICAL LEGEND

	2'X4' FLUORESCENT LIGHT FIXTURE – "3" DENOTES QUANTITY OF LAMPS
	2'X1' FLUORESCENT LIGHT FIXTURE
A	WALL MOUNTED LIGHT FIXTURE – "A" DENOTES TYPE
	RECESSED CEILING LIGHT FIXTURE
	EXIT LIGHTING SIGN W/ ARROWS AS REQUIRED
J	JUNCTION BOX
J	DISCONNECT SWITCH – SIZE AND TYPE AS NOTED
	DUPLEX RECEPTACLE – 20 A. – 125 V. W/ GROUND
WP. GFI	DUPLEX RECEPTACLE WEATHERPROOF / GROUND FAULT INTER.
	CONDUIT – CONCEALED IN WALL OR CEILING
	HOMERUN TO PANELBOARD
	FLEXIBLE CONDUIT
	PANELBOARD
$	SINGLE POLE SWITCH
AHU	AIR HANDLER UNIT
CU	CONDENSING UNIT
	TELEPHONE / DATA OUTLET
$3	THREE WAY SWITCH
	ELECTRIC SERVICE METER
	BATTERY PACK EMERGENCY LIGHT
A	CEILING MOUNTED LIGHTING FIXTURE – "A" DENOTES TYPE
	SINGLE RECEPTACLE – 20 A. – 125 V. W/ GROUND
	SPECIAL PURPOSE RECEPTACLE – VERIFY TYPE
	DUPLEX RECEPTACLE – FLOOR MOUNTED
	QUADRAPLEX RECEPTACLE – 20 A. – 125 V.
$V	VARIABLE SPEED FAN CONTROL SWITCH
$D	DIMMER SWITCH SIZE AS REQUIRED
	1'X4' FLUORESCENT LIGHT FIXTURE
	BATH EXHAUST FAN
	CEILING FAN
	CABLE / TELEVISION OUTLET

PENETRATION NOTE:

COORDINATE ALL PENETRATION SIZES & LOCATIONS WITH PRECAST PANEL MANUFACTURER. TYPICAL AT ALL PANELS. PROVIDE SHOP DRAWINGS FOR ENGINEER APPROVAL.

DOCK EQUIPMENT SPECIFICATIONS:

P&W

POWER PEDESTAL MARINA POWER – MODEL #PCMFS 12 UTILITY PEDESAL OR EQUAL "WHITE" WITH – 100 AMP BRK & 50 AMP BRK AT EACH SIDE & RECEPTICALS HOSE BIB WITH BACKFLOWS BOTH SIDES PROVIDE SHOP DRAWING OF SLEEVE PENTRATIONS AT SLAB

LIGHT FIXTURE SCHEDULE:

MARK	FIXTURE TYPE MANUFACTURER/MODEL #	COMMENTS
DL	POLE LIGHT: WHATLEY DECORATIVE LAMP POST POLE TS45 13'-0", DECORATIVE BASE: D21M, AB, BLK, O.D. 4", TENON 40, SLA17-2 (4" POLE), UCM-STR, UNIVERSE COLLECTION MEDIUM LED-UCM: 1. MODEL-UCM, 2. HOOD-STR, 3. DISTRIBUTION-T3-3ZLED, 4. COLOR TEMP-35K, 5. LUMEN PACKAGE-48 WATTS, 7. OPTIONS-FTG, 9. VOLTAGE-120-277	DOCK GENERAL LIGHTING TO MATCH EXISTING CITY PIER POLE LIGHTING
B	BEACHSIDE LIGHTING L-012F-15WX-35WATT	5 12VOLT TRANSFORMERS GLP-1000-TP — MATCH EXISTING LIGHT FIXTURES

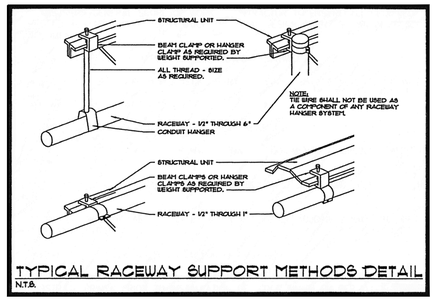

TYPICAL RACEWAY SUPPORT METHODS DETAIL
N.T.S.

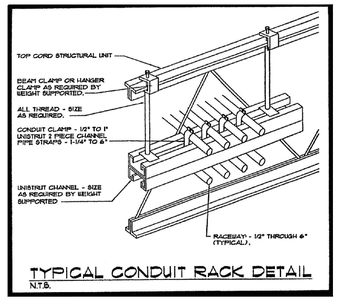

TYPICAL CONDUIT RACK DETAIL
N.T.S.

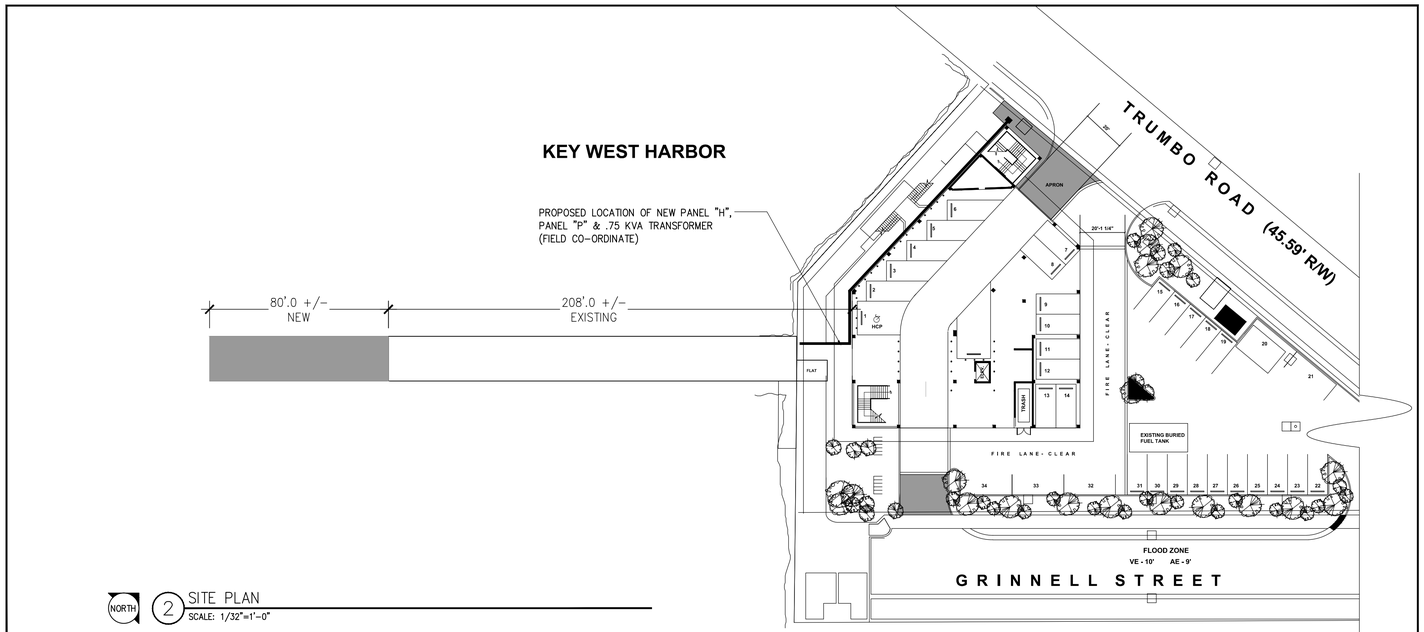

2 SITE PLAN
SCALE: 1/32"=1'-0"

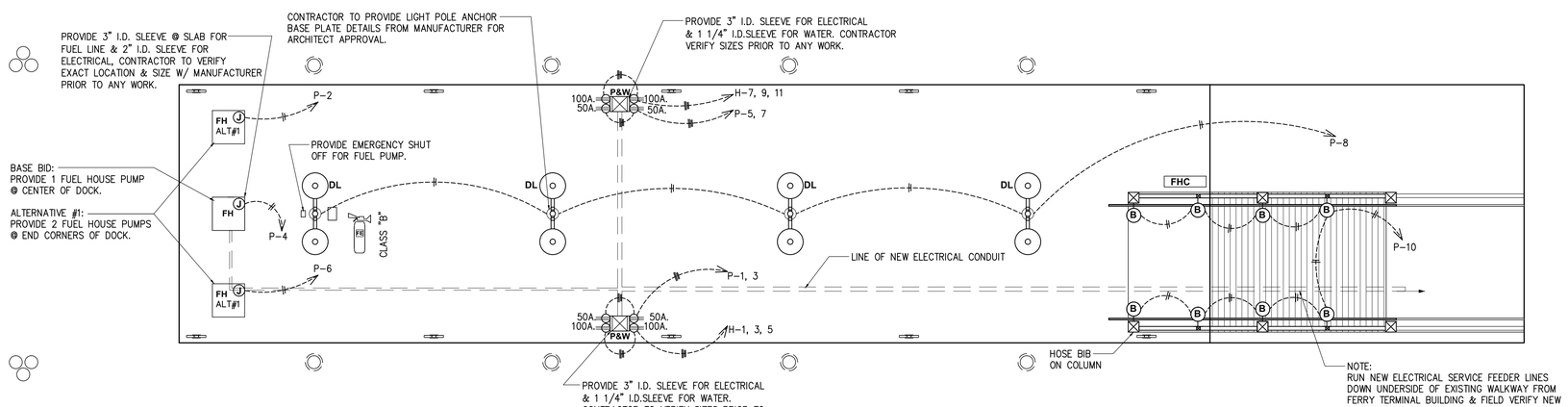

1 ELECTRICAL PLAN
SCALE: 3/16"=1'-0"

Florida Technical, Inc.
THOMAS CHEEVER, P.E.
114 WEST DAVIS BLVD.
TAMPA, FLORIDA 33606
813-251-5948
PE # 36054 (FL) CA # 4455 (FL) PE # 74587 (PA)

OWNER/CLIENT:

PIKE ARCHITECTS
KEY WEST, FL

PROJECT/TENANT:

KEY WEST BIGHT FERRY TERMINAL
100 GRINNELL STREET
KEY WEST, FL 33040

CONSULTANT:

Florida Technical, Inc.
114 West Davis Boulevard
Tampa, Florida 33606
Phone: 813.251.5948
C.A.# 4455
P.E.# 36054
Contact: Thomas E. Cheever, P.E.

ENGINEERING SEAL:

CONSULTANT:

CONSULTANT:

CONSULTANT:

REVISIONS

NO	DATE	DESCRIPTION	BY

DISCLAIMER:

The information contained herein is the sole property of FLORIDA TECHNICAL, INC. any unauthorized reproduction and/or reuse will result in prosecution under appropriate copyright and patent laws.

It is the responsibility of the client to provide connection to power source by a licensed electrician in accordance with all national and local codes.

DRAWN BY: TD	DATE: 14 SEPTEMBER 2016
CHECKED BY: TC	PROJECT NO.: BIGHT FERRY
SCALE:	PROPOSAL NO.:
FLOOR: N/A	

SHEET NAME

ELECTRICAL PLAN

SHEET NUMBER

E-1

ELECTRICAL CONSTRUCTION NOTES

1. ALL WORK SHALL BE IN ACCORDANCE WITH THE NATIONAL ELECTRICAL CODE (NEC), LATEST EDITION, AND APPLICABLE STATE AND LOCAL ORDINANCES. EACH PIECE OF ELECTRICAL EQUIPMENT INSTALLED SHALL BEAR A.U.L. LABEL. ALL WORK SHALL BE PERFORMED IN COMPLIANCE WITH THE OCCUPATIONAL SAFETY AND HEALTH ACT (OSHA) LATEST EDITION.
2. THE ELECTRICAL CONTRACTOR SHALL ARRANGE AND PAY FOR ALL PERMITS, FEES, INSPECTIONS, ETC., AND CARRY ALL INSURANCE AS REQUIRED BY LAW PRIOR TO STARTING CONSTRUCTION.
3. THE ELECTRICAL CONTRACTOR SHALL PROVIDE ALL NECESSARY LABOR, MATERIALS, TRANSPORTATION, RIGGING, TOOLS, STORAGE, ETC., FOR ALL WORK INDICATED AND REQUIRED FOR A COMPLETE INSTALLATION.
4. THE ELECTRICAL WORK SHALL INCLUDE COMPLETE TESTING OF ALL EQUIPMENT AND WIRING. WORKMANSHIP SHALL BE THE HIGHEST QUALITY AS ESTABLISHED BY TRADE STANDARDS.
5. ELECTRICAL CONTRACTOR SHALL KEEP A MASTER SET OF BLUE LINES THAT ARE TO BE MARKED UP TO REFLECT "AS BUILT" CONDITIONS ON A DAILY BASIS. THESE "AS BUILT" MARK UPS MAY BE REVIEWED BY THE ARCHITECT, ENGINEER OR OWNER'S REPRESENTATIVE AT THEIR REQUEST WITHOUT PRIOR NOTIFICATION. THESE "AS BUILT" MARK UPS WILL BE REVIEWED BY THE ENGINEER AND TURNED OVER TO THE OWNER AT THE CONCLUSION OF THE PROJECT.
6. THE ELECTRICAL CONTRACTOR SHALL BE RESPONSIBLE FOR COMMUNICATION WITH THE LOCAL BUILDING DEPARTMENT AND INSPECTION PERSONNEL TO REVIEW CONTRACT DOCUMENTS PRIOR TO INSTALLATION.
7. THE OWNER WILL NOT BE HELD LIABLE FOR FIELD CHANGES THAT ARISE FROM CONTRACTOR ERROR OR OMISSION OF MATERIALS OR WORKMANSHIP IN WORK PERFORMANCE.
8. THE ELECTRICAL CONTRACTOR SHALL MAKE ALL NECESSARY ARRANGEMENTS WITH THE LOCAL POWER COMPANY FOR SERVICE AND SHALL BE RESPONSIBLE FOR VERIFICATION OF ALL UTILITIES AND THE PLACEMENT LOCATION OF THE ELECTRICAL SERVICE AND EQUIPMENT. THE ELECTRICAL CONTRACTOR SHALL PAY ALL NECESSARY CHARGES TO THE POWER COMPANY PRIOR TO CONSTRUCTION.
9. ALL ELECTRICAL EQUIPMENT, MATERIALS AND WORKMANSHIP SHALL BE GUARANTEED FOR A PERIOD OF ONE (1) YEAR FROM DATE OF ACCEPTANCE.
10. IN GENERAL, PLANS AND DIAGRAMS ARE SCHEMATIC ONLY AND SHOULD NOT BE SCALED. CO-ORDINATE ALL ELECTRICAL WORK WITH OTHER TRADES, (PLUMBING, HVAC, ETC.) SO AS NOT TO CONFLICT IN LOCATIONS OR PERFORMANCE OF OTHER SYSTEMS.
11. NECESSARY, OBVIOUSLY REQUIRED ELECTRICAL ITEMS THAT ARE NOT SHOWN ON THE DRAWINGS, DOES NOT RELIEVE THE CONTRACTOR OF HIS RESPONSIBILITY TO INSTALL A COMPLETE AND SAFE ELECTRICAL SYSTEM.
12. THE ELECTRICAL CONTRACTOR SHALL CO-ORDIANTE WITH OTHER TRADES SO THAT INTERFERENCE BETWEEN CONDUITS, RACEWAYS, DUCTS, PIPING AND STRUCTURAL MEMBERS WILL BE AVOIDED.
13. THE ELECTRICAL CONTRACTOR SHALL FURNISH, INSTALL AND CONNECT ALL WIRING IN ACCORDANCE WITH THE WIRING DIAGRAMS FOR POWER AND CONTROL OF ALL AIR CONDITIONING, HEATING AND VENTILATING EQUIPMENT AS PROVIDED BY THE HVAC CONTRACTOR.
14. WIRE AND CABLE SHALL BE 600 VOLT MINIMUM AWG. #12. ALL WIRING SHALL BE TYPE TW, THN OF THHN AS NECESSARY TO MEET ALL APPLICABLE CODES.
15. ALL WIRE AND CABLE SHALL BE IN A CONDUIT, MINIMUM SIZE 1/2" WITH LARGER SIZES AS INDICATED OR REQUIRED BY NEC. ALL SERVICE AND PANELBOARD FEEDER CONDUITS, CONDUITS IN OR BELOW FLOOR, IN DAMP AND WET LOCATIONS, IN CONCRETE AND LARGER THAN TWO INCHES SHALL BE RIGID GALVANIZED STEEL.

    ALL CONDUCTORS, UNLESS OTHERWISE NOTED, SHALL BE COPPER RUN IN APPROVED METAL RACEWAY. METAL RACEWAY PENETRATING FLOORS AND FIRE RATED PARTITIONS SHALL BE SEALED AIR TIGHT WITH MATERIAL RATED EQUAL TO THE PENETRATED MATERIAL.

    FURNISH AND INSTALL ALL BRANCH CIRCUITS. CIRCUITS SHALL BE #12 WIRE IN 1/2" CONDUIT UNLESS OTHERWISE NOTED. THESE ARE MINIMUM WIRE AND CONDUIT SIZES. ALL WIRE SHALL BE COPPER. NO ALUMINUM CONDUCTORS WILL BE PERMITTED.
16. ALL NEW RACEWAYS / CONDUITS SHALL BE METALLIC MINIMUM SIZE 1/2"; SUPPORTED AT INTERVALS NOT TO EXCEED EIGHT (8) FEET; ALL FITTINGS SHALL BE COMPRESSION TYPE, NO SET SCREW TYPE FITTINGS WILL BE PERMITTED.
17. IN NO CASE MAY EMT OR FLEXIBLE CONDUIT BE RUN FROM FIXTURE TO FIXTURE WITHOUT THE USE OF OUTLET BOXES.
18. FLEXIBLE CONDUIT CAN ONLY BE USED FOR SHORT (MAXIMUM SIX FEET) FINAL CONNECTIONS TO INTERIOR LIGHTING FIXTURES AND EQUIPMENT.
19. THE ELECTRICAL CONTRACTOR SHALL FOLLOW THE SAME COLOR CODE IDENTIFICATION FOR EACH PHASE THROUGHOUT THE SYSTEM FROM SERVICE SWITCH OR TRANSFORMER THROUGH ALL BRANCH CIRCUITS.
20. ALL SLAB OR ROOF PENETRATIONS SHALL BE WITH APPROVED FIRE RATED AND SMOKE BARRIER FITTINGS. PROVIDE ACCESSORIES (PITCH, POCKETS, CONCRETE, ETC.) AS REQUIRED.
21. ALL CONDUITS SHALL BE RUN CONCEALED WHERE POSSIBLE. EXPOSED CONDUITS SHALL BE RUN PARALLEL AND /OR PERPENDICULAR TO BUILDING CONSTRUCTION.
22. CONDUIT MAY NOT BE RUN IN DUCTWORK.
23. THE ELECTRICAL CONTRACTOR SHALL FURNISH AND INSTALL A 3/4" EMPTY CONDUIT FROM EACH TELEPHONE OUTLET TO THE OWNER'S TELEPHONE BOARD, WITH PULL WIRE. PROVIDE ALL REQUIRED CONDUIT FROM OWNER'S TELEPHONE BOARD TO BUILDING'S TELEPHONE ROOM. PROVIDE PULL BOXES AND PULL WIRE AS REQUIRED. VERIFY EXACT LOCATION OF EXISTING TELEPHONE SERVICE AND CONDUITS. CO-ORDINATE ALL WORK WITH OTHER TRADES AND TELEPHONE COMPANY.
24. THE ELECTRICAL CONTRACTOR SHALL PROVIDE AND INSTALL ALL CONDUIT, BOXES, FITTINGS, PULL WIRE, ETC., REQUIRED FOR ALL MISCELLANEOUS SYSTEMS PER OWNER'S REQUIREMENTS. CO-ORDINATE EXACT LOCATIONS AND REQUIREMENTS WITH OWNER.
25. ALL COMMUNICATION AND CONTROL WIRING SHALL BE IN CONDUIT.
26. FURNISH AND INSTALL PANELBOARDS OF AMPACITIES SHOWN ON PLANS. PANELS SHALL BE CIRCUIT BREAKER TYPE, WITH MAIN LUGS AND BRANCH CIRCUIT BREAKERS AS SCHEDULED. ALL ELECTRICAL PANELS AND EQUIPMENT SHALL BE U.L. LISTED AND APPROVED FOR SUCH USE. PANELS SHALL BE BOLT-ON TYPE AS MANUFACTURED BY SQUARE D OR APPROVED EQUAL.
27. ALL EQUIPMENT SHALL BE PROPERLY GROUNDED IN ALL RACEWAYS, BRANCH CIRCUITS & FEEDERS, PER LOCAL ELECTRICAL CODES AND THE NEC.
28. THE ELECTRICAL CONTRACTOR SHALL CO-ORDINATE ALL RECEPTACLE AND OUTLET LOCATIONS WITH ARCHITECTURAL DRAWINGS AND GENERAL CONTRACTOR BEFORE ROUGH IN.
29. ALL LIGHTING FIXTURES SHALL BE SELECTED BY THE OWNER AND INSTALLED BY THE ELECTRICAL CONTRACTOR. (LIGHTING FIXTURES INDICATED ON DRAWINGS AND SCHEDULES ARE FOR REFERENCE ONLY. FIXTURES OF EQUAL QUALITY MAY BE USED AS DIRECTED.)
30. ALL TEMPORARY ELECTRICAL SERVICE REQUIRED FOR CONSTRUCTION SHALL BE FURNISHED BY THE ELECTRICAL CONTRACTOR. FOLLOWING CONSTRUCTION, ALL TEMPORARY WIRING AND EQUIPMENT SHALL BE REMOVED WHEN DIRECTED BY THE GENERAL CONTRACTOR. ELECTRIC OUTLETS, CORDS, LIGHTS, LIGHTING LEVELS, ETC., SHALL CONFORM TO O.S.H.A AND LOCAL ORDINANCES.
31. ALL ELECTRICAL EQUIPMENT EXPOSED TO WEATHER SHALL BE WEATHERPROOF AND ALL CONDUIT EXPOSED TO WEATHER SHALL BE HEAVY WALL GALVANIZED STEEL.
32. SUBMIT SIX COMPLETE COPIES OF SHOP DRAWINGS AND PRODUCT DATA TO LIGHTING FIXTURES, ELECTRICAL PANELS, SERVICE EQUIPMENT, WIRING DEVICES AND DISCONNECT SWITCHES.

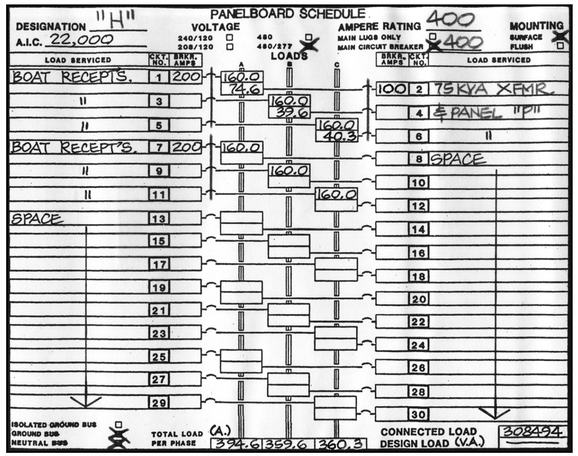

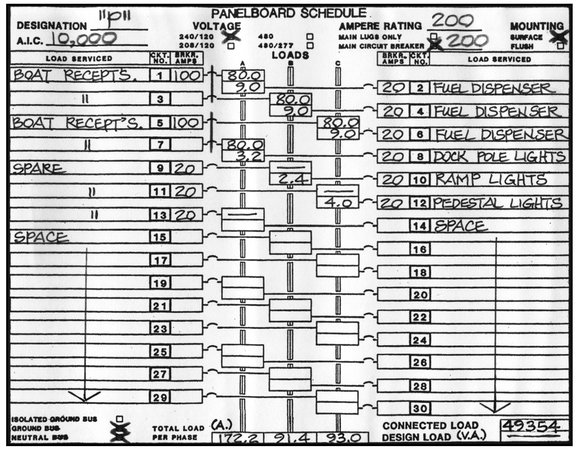

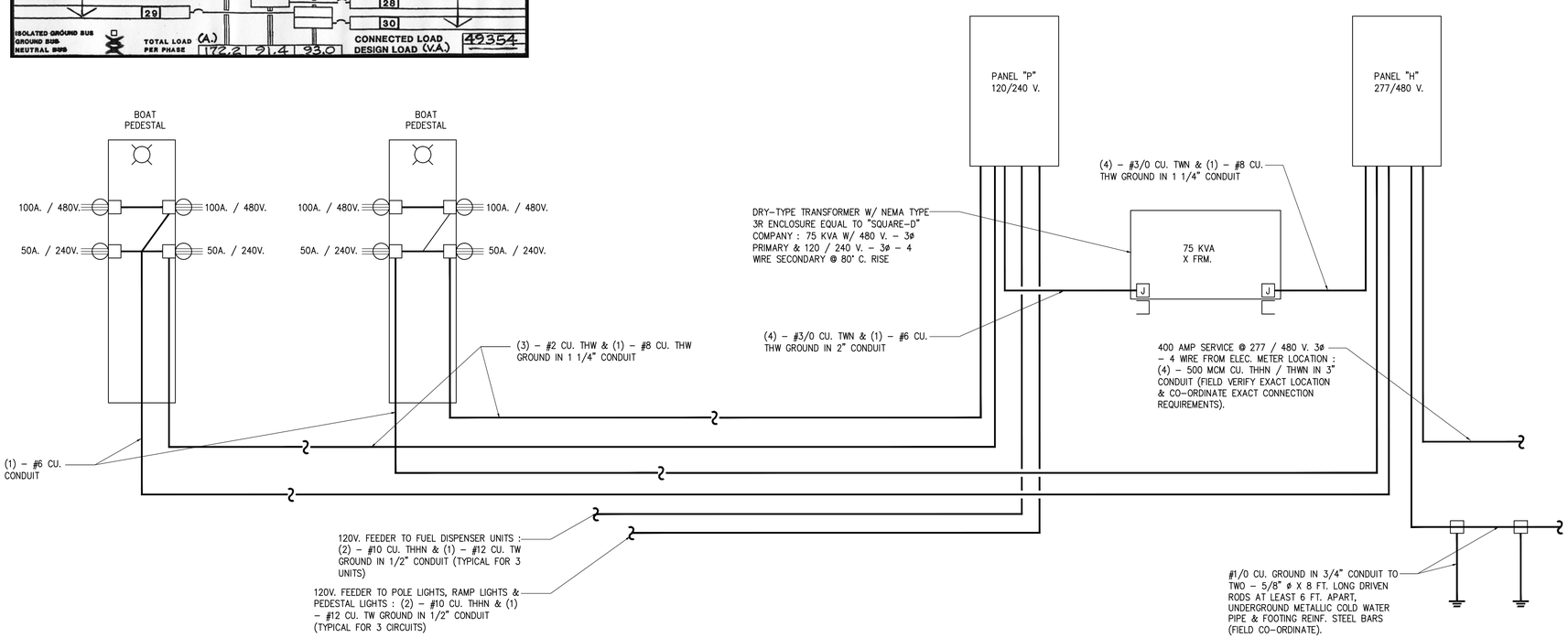

1 ELECTRICAL RISER DIAGRAM

SCALE: N.T.S.

Florida Technical, Inc.
THOMAS CHEEVER, P.E.
114 WEST DAVIS BLVD.
TAMPA, FLORIDA 33606
813-251-5948
PE # 36054 (FL) CA # 4455 (FL) PE # 74587 (PA)

OWNER/CLIENT:

PIKE ARCHITECTS
KEY WEST, FL

PROJECT/TENANT:

KEY WEST BIGHT FERRY TERMINAL
100 GRINNELL STREET
KEY WEST, FL 33040

CONSULTANT:

Florida Technical, Inc.
114 West Davis Boulevard
Tampa, Florida 33606
Phone: 813.251.5948
C.A.# 4455
P.E.# 36054
Contact: Thomas E. Cheever, P.E.

ENGINEERING SEAL:

CONSULTANT:

CONSULTANT:

CONSULTANT:

REVISIONS

NO	DATE	DESCRIPTION	BY

DISCLAIMER:

The information contained herein is the sole property of FLORIDA TECHNICAL. INC. any unauthorized reproduction and/or reuse will result in prosecution under appropriate copyright and patent laws.

It is the responsibility of the client to provide connection to power source by a licensed electrician in accordance with all national and local codes.

DRAWN BY: TD	DATE: 14 SEPTEMBER 2016
CHECKED BY: TC	PROJECT NO.: BIGHT FERRY
SCALE:	PROPOSAL NO.:
FLOOR: N/A	

SHEET NAME

SCHEDULES & RISER DIAGRAMS

SHEET NUMBER

E-2