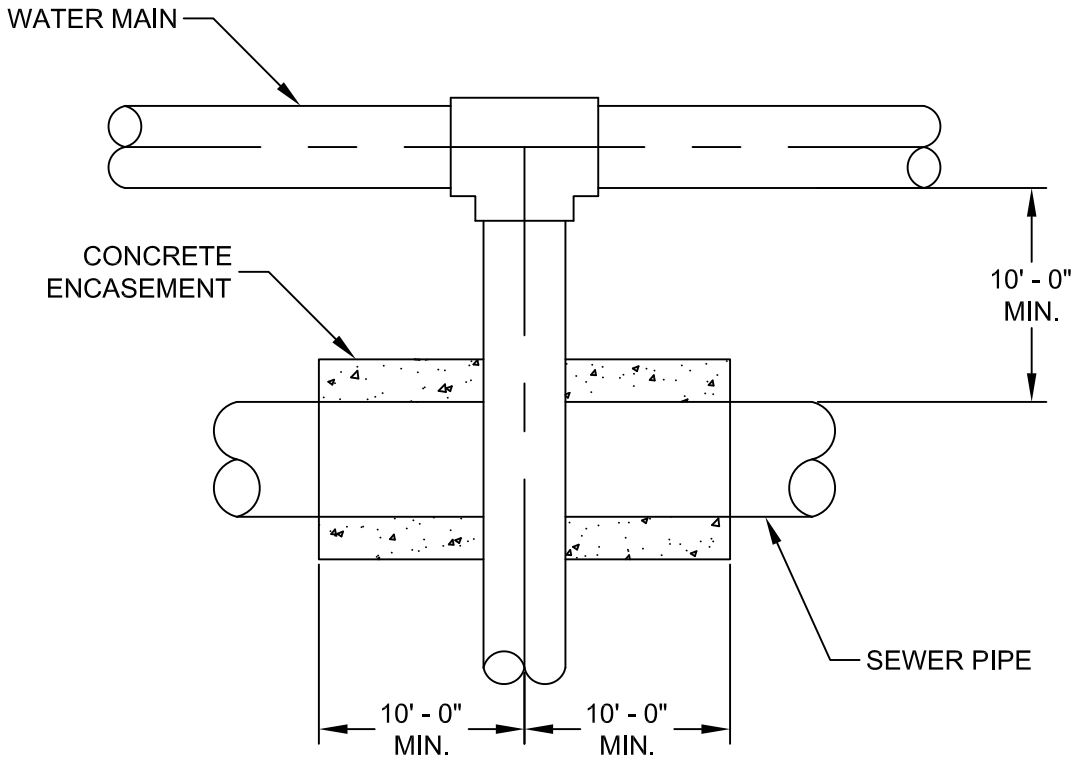

PLAN

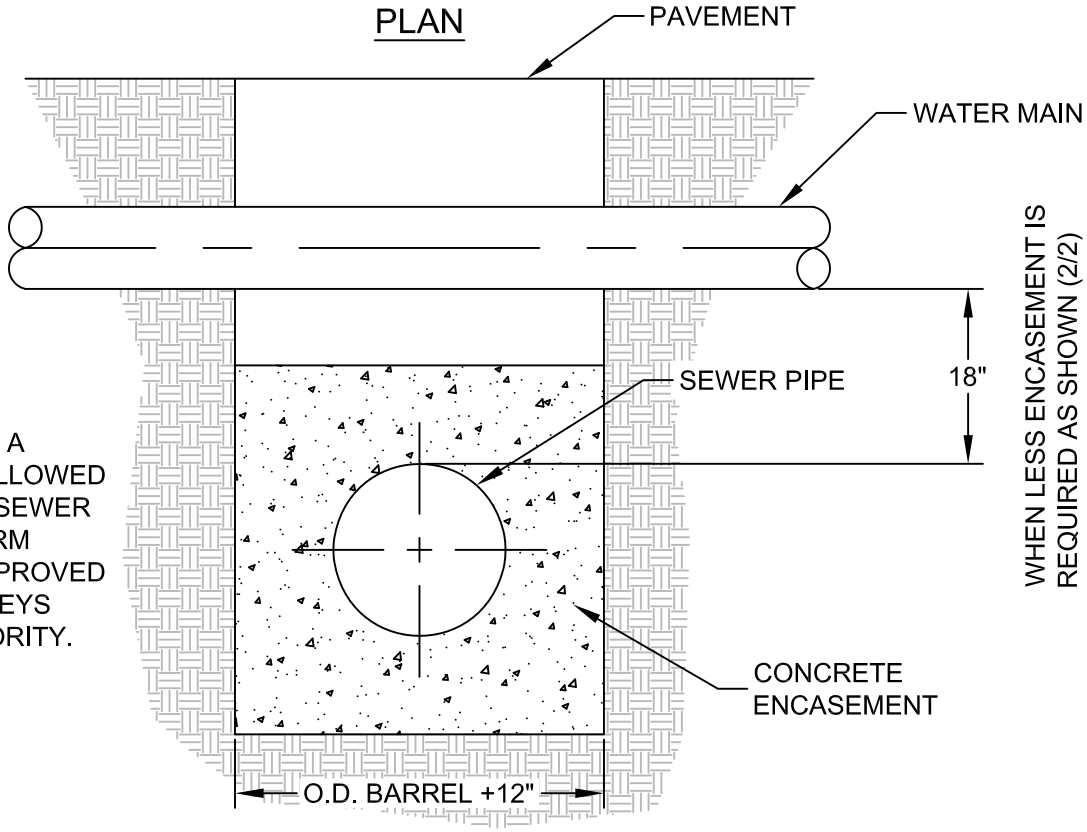

NOTE:
AT NO TIME SHALL A WATER MAIN BE ALLOWED UNDER A SEWER, SEWER LATERAL, OR STORM DRAIN UNLESS APPROVED BY THE FLORIDA KEYS AQUEDUCT AUTHORITY.

SECTION

City of Key West Engineering Services 3132 Flagler Avenue, Key West, FL 33040	TITLE ENCASEMENTS		
	DRAWN JTJ SCALE NTS	DETAIL	JUL 2015 DETAIL 15