P1

DETAIL: PAY TO PARK THIS BLOCK NTS

P2

DETAIL: PAY TO PARK INSTRUCTIONS NTS

P3

DETAIL: WEEKLY PARKING TIMES NTS

P4

DETAIL: PAY TO PARK WEEKLY TIMES NTS

P5

DETAIL: PAY TO PARK (6 PM - 6 AM) NTS

P6

DETAIL: SCOOTER PARKING (6 PM - 6 AM) NTS

P7

DETAIL: TAXI STAND (6 PM - 6 AM) NTS

P8

DETAIL: 15 MINUTE LOADING ZONE NTS

R1-A

DETAIL: LOADING ZONE NTS

R1-B

DETAIL: LOADING ZONE NTS

R1-C

DETAIL: LOADING ZONE NTS

R2

DETAIL: LOADING ZONE NTS

R3

DETAIL: SCOOTER PARKING ONLY NTS

R4

DETAIL: MOTORCYCLE PARKING NTS

R5

DETAIL: BICYCLE PARKING ONLY NTS

R6

DETAIL: BUS STOP - NO PARKING NTS

R7

DETAIL: LOADING ZONE NTS

R8

DETAIL: NO PARKING NTS

S1

DETAIL: STOP SIGN NTS

S2

DETAIL: DO NOT ENTER NTS

S3

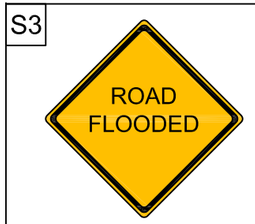

DETAIL: ROAD FLOODED NTS

S4

DETAIL: ONE WAY NTS

H1

DETAIL: HANDICAP PARKING NTS

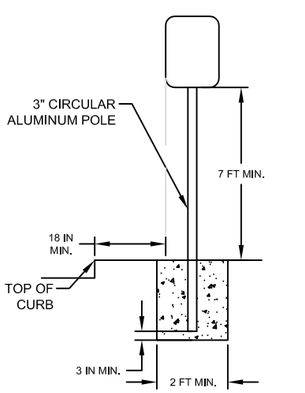

DETAIL: TYPICAL SIGN LOCATION AND SPACING NTS

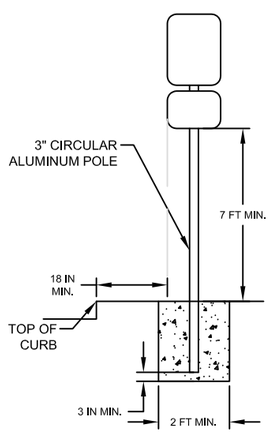

DETAIL: TYPICAL DOUBLE SIGN LOCATION AND SPACING NTS

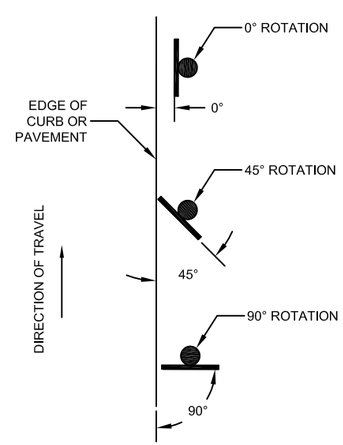

DETAIL: SIGN ORIENTATION NTS

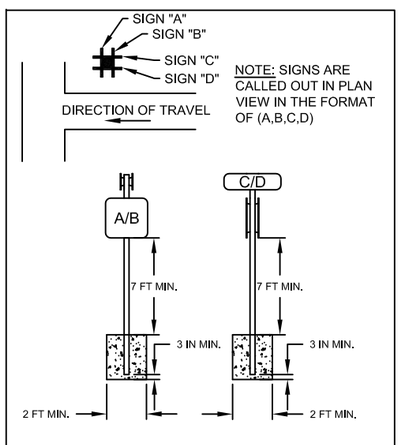

DETAIL: FOUR SIDED SIGN NTS

City of Key West
Engineering Services
3132 Flagler Avenue, Key West, FL 33040

TITLE

CITY OF KEY WEST

TYPICAL SIGNS

DRAWN	JTJ
SCALE	NTS
DATE	08/06/15
SHEET	1 of 1