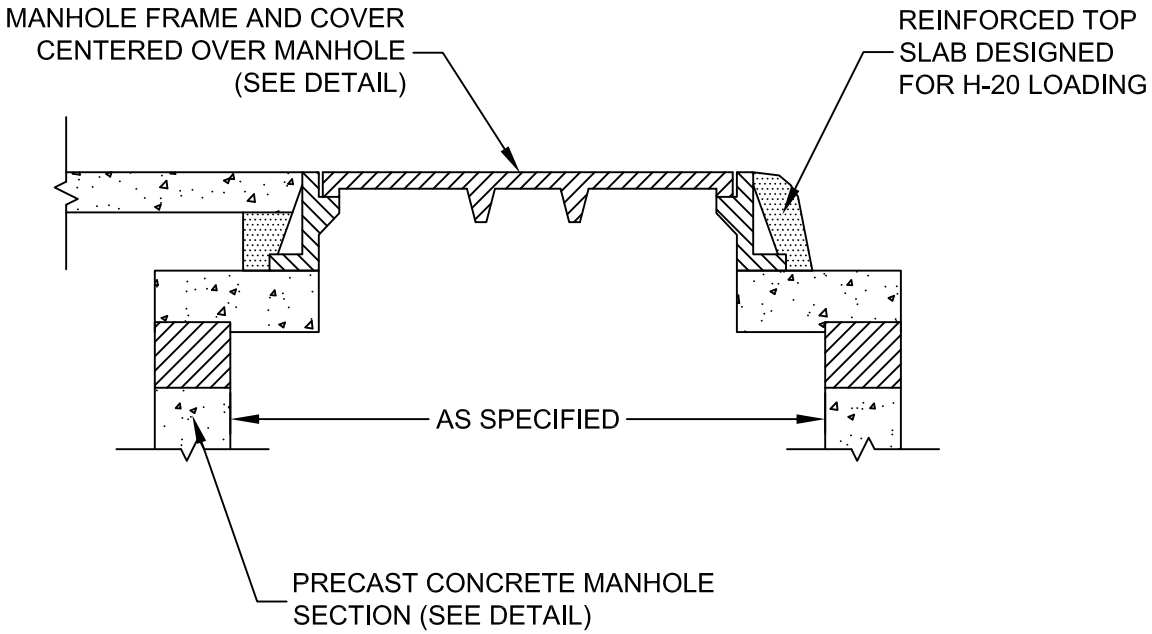

City of Key West	TITLE	FLAT TOP MANHOLE		
Engineering Services 3132 Flagler Avenue, Key West, FL 33040	DRAWN JTJ SCALE NTS	DETAIL		JUL 2015 DETAIL 6