U.S. DEPARTMENT OF HOMELAND SECURITY
FEDERAL EMERGENCY MANAGEMENT AGENCY
National Flood Insurance Program

FLOODPROOFING CERTIFICATE
FOR NON-RESIDENTIAL STRUCTURES

OMB No. 1660-0008
Expiration Date: July 31, 2015

The floodproofing of non-residential buildings may be permitted as an alternative to elevating to or above the Base Flood Elevation; however, a floodproofing design certification is required. This form is to be used for that certification. Floodproofing of a residential building does not alter a community's floodplain management elevation requirements or affect the insurance rating unless the community has been issued an exception by FEMA to allow floodproofed residential basements. The permitting of a floodproofed residential basement requires a separate certification specifying that the design complies with the local floodplain management ordinance.

BUILDING OWNER'S NAME City of Key West	FOR INSURANCE COMPANY USE
STREET ADDRESS (Including Apt., Unit, Suite, and/or Bldg. Number) OR P.O. ROUTE AND BOX NUMBER 251 Margaret Street	POLICY NUMBER
OTHER DESCRIPTION (Lot and Block Numbers, etc.) Key West Bight	COMPANY NAIC NUMBER

CITY Key West STATE FL ZIP CODE 33040

SECTION I – FLOOD INSURANCE RATE MAP (FIRM) INFORMATION

Provide the following from the proper FIRM:

COMMUNITY NUMBER	PANEL NUMBER	SUFFIX	DATE OF FIRM INDEX	FIRM ZONE	BASE FLOOD ELEVATION (In AO Zones, Use Depth)
121068	12087C1516	K	2/18/2005	AE	9

Indicate elevation datum used for Base Flood Elevation shown above: ☐ NGVD 1929 ☐ NAVD 1988 ☐ Other/Source: _____

SECTION II – FLOODPROOFING INFORMATION (By a Registered Professional Engineer or Architect)

Elevations are based on: ☐ Construction Drawings ☐ Building Under Construction ☒ Finished Construction

Floodproofing Design Elevation Information:

Building is floodproofed to an elevation of 10 . 0 **feet (In Puerto Rico only:** ____ . ____ **meters).** ☒ NGVD 1929 ☐ NAVD 1988 ☐ Other/Source: _____
(Elevation datum used must be the same as that used for the Base Flood Elevation.)

Height of floodproofing on the building above the lowest adjacent grade is 6.4 **feet (In Puerto Rico only:** _____ **meters).**

For Unnumbered A Zones Only:

Highest adjacent (finished) grade next to the building (HAG) ____ . ____ **feet (In Puerto Rico only:** ____ . ____ **meters)**

☐ NGVD 1929 ☐ NAVD 1988 ☐ Other/Source: _____

(NOTE: For insurance rating purposes, the building's floodproofed design elevation must be at least 1 foot above the Base Flood Elevation to receive rating credit. If the building is floodproofed only to the Base Flood Elevation, then the building's insurance rating will result in a higher premium.)

SECTION III – CERTIFICATION (By a Registered Professional Engineer or Architect)

Non-Residential Floodproofed Construction Certification:

I certify that, based upon development and/or review of structural design, specifications, and plans for construction, the design and methods of construction are in accordance with accepted standards of practice for meeting the following provisions:

The structure, together with attendant utilities and sanitary facilities, is watertight to the floodproofed design elevation indicated above, with walls that are substantially impermeable to the passage of water.

All structural components are capable of resisting hydrostatic and hydrodynamic flood forces, including the effects of buoyancy, and anticipated debris impact forces.

I certify that the information on this certificate represents my best efforts to interpret the data available. I understand that any false statement may be punishable by fine or imprisonment under 18 U.S. Code, Section 1001.

CERTIFIER'S NAME Paul R. Semmes, PE	LICENSE NUMBER (or AFIX SEAL) 44137		
TITLE Senior Engineer	COMPANY NAME Perez Engineering & Development, Inc.		
ADDRESS 1010 Kennedy Drive, Suite 201	CITY Key West	STATE FL	ZIP CODE 33040
SIGNATURE	DATE 10/23/13	PHONE (305) 293-9440	

Copies should be made of this Certificate for: 1) community official, 2) insurance agent/company, and 3) building owner.

National Flood Insurance Program

FLOODPROOFING CERTIFICATE

FOR NON-RESIDENTIAL STRUCTURES

Paperwork Reduction Act Notice

General: This information is provided pursuant to Public Law 96-511 (the Paperwork Reduction Act of 1980, as amended), dated December 11, 1980, to allow the public to participate more fully and meaningfully in the Federal paperwork review process.

Authority: Public Law 96-511, amended; 44 U.S.C. 3507; and 5 CFR 1320.

Paperwork Burden Disclosure Notice: Public reporting burden for this data collection is estimated to average 3.25 hours per response. The burden estimate includes the time for reviewing instructions, searching existing data sources, gathering and maintaining the data needed, and completing and submitting this form. You are not required to respond to this collection of information unless a valid OMB control number is displayed on this form. Send comments regarding the accuracy of the burden estimate and any suggestions for reducing the burden to: Information Collections Management, Department of Homeland Security, Federal Emergency Management Agency, 1800 South Bell Street, Arlington, VA 20598-3005, Paperwork Reduction Project (1660-0008). **NOTE: Do not send your completed form to this address.**

Privacy Act Statement

Authority: Title 44 CFR § 61.7 and 61.8.

Principal Purpose(s): This information is being collected for the primary purpose of estimate the risk premium rates necessary to provide flood insurance for new or substantially improved structures in designated Special Flood Hazard Areas.

Routine Use(s): The information on this form may be disclosed as generally permitted under 5 U.S.C. § 552a(b) of the Privacy Act of 1974, as amended. This includes using this information as necessary and authorized by the routine uses published in DHS/FEMA-003 – National Flood Insurance Program Files System or Records Notice 73 Fed. Reg. 77747 (December 19, 2008); DHS/FEMA/NFIP/LOMA-1 – National Flood Insurance Program (NFIP) Letter of Map Amendment (LOMA) System of Records Notice 71 Fed. Reg. 7990 (February 15, 2006); and upon written request, written consent, by agreement, or as required by law.

Disclosure: The disclosure of information on this form is voluntary; however, failure to provide the information requested may result in the inability to obtain flood insurance through the National Flood Insurance Program or may be subject to higher premium rates for flood insurance. Information will only be released as permitted by law.

OF THE FLORIDA KEYS

P.O. Box 420529
Summerland Key, FL 33042
Phone: 305-872-0888
Fax: 305-872-8898
www.seatech.cc

POC: Paul R. Semmes, PE
e-mail: pauls@seatech.cc

DUNS #: 15-385-8220
Cage Code#: 1BTD2
Woman Owned Small Business

FLOOD PROOF FOUNDATION

DESIGN CALCULATIONS

KEY WEST BIGHT BUILDING
MARGARET STREET PLAZA
KEY WEST, FLORIDA

PAUL RAPHAEL SEMMES
LICENSE
No 44137
STATE OF
FLORIDA
PROFESSIONAL ENGINEER

10/4/2013

Use or disclosure of data contained on this sheet is subject to the restriction on the title page of this proposal.

Project Information

Project Title : Key West Bight Building

Description : Flood-Proof Foundation & 1st Floor, Supported on Auger Piles, Wood-Framed 2nd Floor & Roof Structure

I.D. : 11-217

Address : Margaret Street Plaza, Key West, FL 33040

Project Leader : Paul R. Semmes, PE

Phone : 305-294-9993 Fax : 305-872-8898 eMail : pauls@seatech.cc

Project Notes AE-9, BFE=9, DFE=10, ASCE 7-05 (150 mph, Exp C)

SeaTech Inc.
Design Build Contractors
350 Crane Boulevard
Sugarloaf Key, Florida 33042
305-872-0855
7552 Navarre Pkwy. Suite 7
Navarre, Florida 32566
850-939-2959

JOB
SHEET NO. OF
CALCULATED BY DATE
CHECKED BY DATE
SCALE

FLOOD FORCE CALCULATIONS

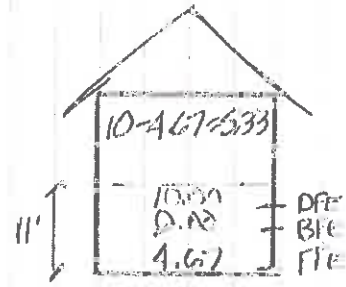

HYDROSTATIC FORCE, F_h

$F_h = \frac{1}{2} \omega H^2$

$= \frac{1}{2} (62.4 \text{ PCF})(5.33')^2 = 886.4^{\#}$

$P_h @ 5.33 = wH$

$= 332.6^{\#}$

BOUYANCY FORCE, F_b

$F_b = \omega A H$

$= (62.4 \text{ PCF})(A)(6.33')$

$= 395 \ (A) \text{ PSF}$

DEBRIS IMPACT FORCE, F_i

$F_i = WV/gt$

$= (1000^{\#})(10 \text{ fps}) / 32.2 \text{ fps}^2 \cdot 1s$

$= 310^{\#F}$

FOUNDATION LAYOUT

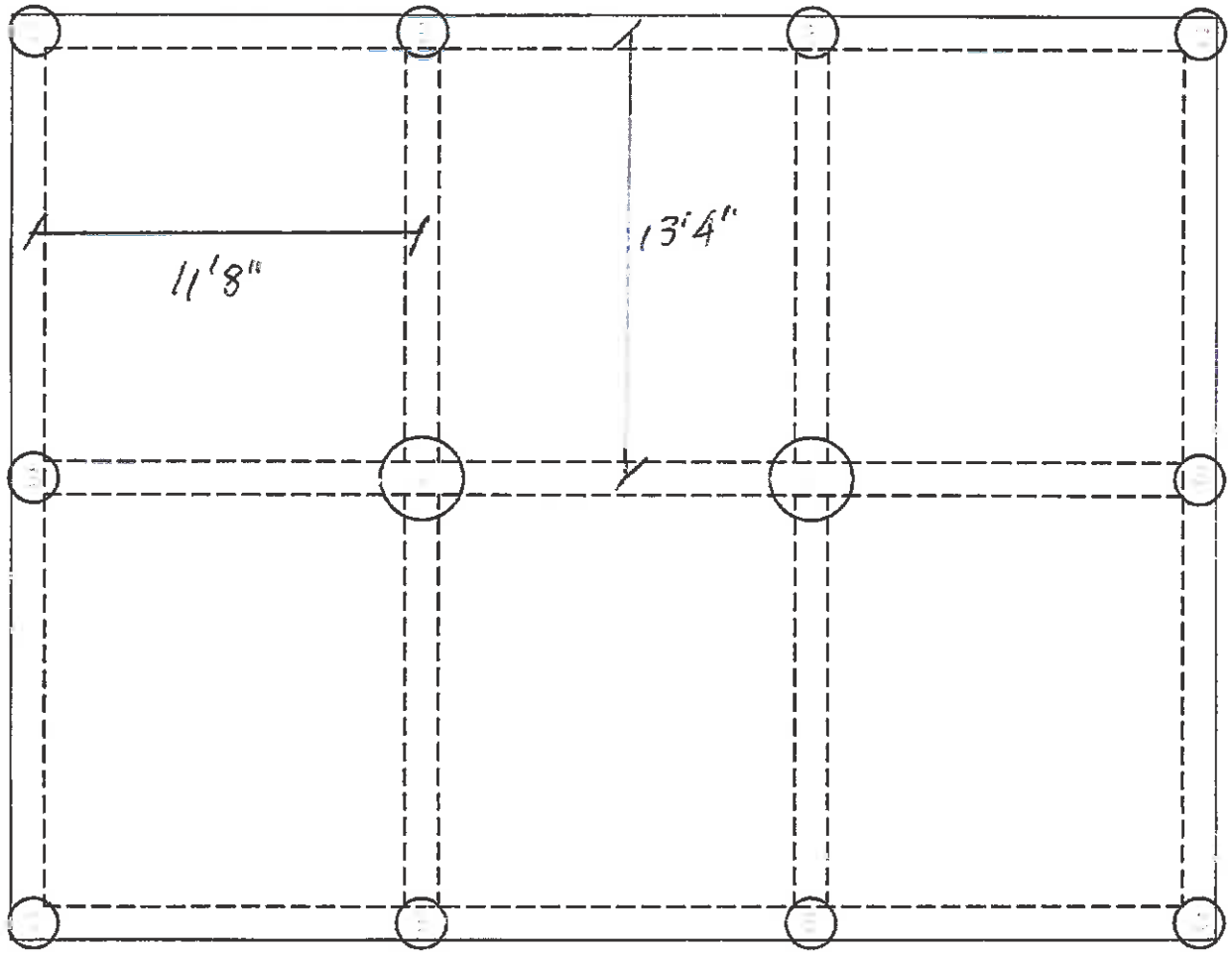

SeaTech inc.
Design Build Contractors
930 Crane Boulevard
Sugarloaf Key, Florida 33042
305-872-0283
7563 Navarre Pkwy., Suite 7
Navarre, Florida 32566
850-939-2159

JOB
SHEET NO OF
CALCULATED BY DATE
CHECKED BY DATE
SCALE

FLOOD WALL CALCULATIONS

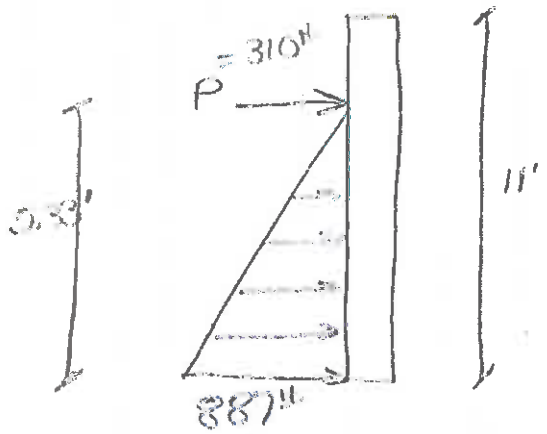

Sea Tech, Inc.
PO Box 420529
Summerland Key, FL 33042
305-294-9993 (Office)
305-872-8898 (Fax)

Title : Key West Bight Building
Engineer: Paul R. Semmes, PE
Project Desc.: Flood-Proof Foundation & 1st Floor, Supported on Auger Piles, Wo

Job # 11-217

Printed: 6 AUG 2012 12:15PM

File: C:\Users\paul\Documents\ENERCALC Data Files\key west bight.ec6
ENERCALC, INC. 1983-2012, Build:6.12.7.27, Ver:6.12.7.27

Concrete Beam

Lic. # : KW-06003893 Licensee : SEATECH INC

Description : Flood Wall - First Floor

CODE REFERENCES

Calculations per ACI 318-05, IBC 2006, CBC 2007, ASCE 7-05
Load Combination Set : ASCE 7-05

Material Properties

f'c	= 3.0 ksi	ϕ Phi Values	Flexure :	0.90
fr = f'c^1/2 * 7.50	= 410.792 psi		Shear :	0.750
ψ Density	= 145.0 pcf	β_1	=	0.850
λ LtWt Factor	= 1.0			
Elastic Modulus	= 3,122.0 ksi	Fy - Stirrups		40.0 ksi
fy - Main Rebar	= 60.0 ksi	E - Stirrups	=	29,000.0 ksi
E - Main Rebar	= 29,000.0 ksi	Stirrup Bar Size #	=	# 3
		Number of Resisting Legs Per Stirrup	=	2

Load Combination ASCE 7-05

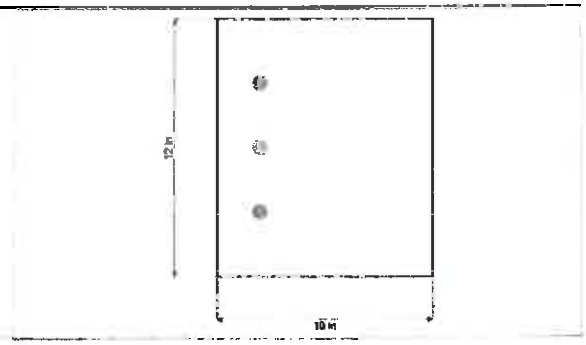

10" w x 12" h

Span=10.0 ft

Cross Section & Reinforcing Details

Rectangular Section, Width = 10.0 in, Height = 12.0 in
Span #1 Reinforcing....
1-#5 at 3.0 in from Bottom, from 0.0 to 10.0 ft in this span
1-#5 at 3.0 in from Top, from 0.0 to 10.0 ft in this span
1-#5 at 6.0 in from Bottom, from 0.0 to 2.50 ft in this span

Applied Loads

Service loads entered. Load Factors will be applied for calculations.

Point Load : H = 0.310 k @ 5.50 ft
Varying Uniform Load : H(S,E) = 0.8870->0.0 k/ft, Extent = 0.0 –>> 5.50 ft, Trib Width = 1.0 ft, (Flood Water)

DESIGN SUMMARY

Design OK

Maximum Bending Stress Ratio = 0.496 : 1
Section used for this span: Typical Section
Mu : Applied: -9.883 k-ft
Mn * Phi : Allowable: 19.908 k-ft
Load Combination: +1.20D+0.50Lr+1.60L+1.60H
Location of maximum on span: 0.000 ft
Span # where maximum occurs: Span # 1

Maximum Deflection

Max Downward L+Lr+S Deflection	0.000 in	Ratio =	0 <360
Max Upward L+Lr+S Deflection	0.000 in	Ratio =	0 <360
Max Downward Total Deflection	0.036 in	Ratio =	6712
Max Upward Total Deflection	0.000 in	Ratio =	999 <180

Vertical Reactions - Unfactored

Support notation : Far left is #1

Load Combination	Support 1	Support 2
Overall MAXimum	2.749	
H Only	2.749	

Shear Stirrup Requirements

Between 0.00 to 0.42 ft, PhiVc/2 < Vu <= PhiVc, Req'd Vs = Min 11.4.5.1, use stirrups spaced at 4.000 in
Between 0.44 to 9.98 ft, Vu < PhiVc/2, Req'd Vs = Not Reqd, use stirrups spaced at 0.000 in

Maximum Forces & Stresses for Load Combinations

Load Combination / Segment Length	Span #	Location (ft) in Span	Bending Stress Results (k-ft) Mu : Max	Phi*Mnx	Stress Ratio
MAXimum BENDING Envelope					
Span # 1	1		-9.88	19.91	0.50
+1.20D+0.50Lr+1.60L+1.60H					
Span # 1	1		-9.88	19.91	0.50
+1.20D+1.60L+0.50S+1.60H					

Concrete Beam

Job #: KW-06003893

Description : Flood Wall - First Floor

Load Combination Segment Length	Span #	Location (ft) In Span	Bending Stress Results (k-ft) Mu : Max	Phi*Mnx	Stress Ratio
Span # 1 +0.90D+1.60W+1.60H	1		-9.88	19.91	0.50
Span # 1 +0.90D+E+1.60H	1		-9.88	19.91	0.50
Span # 1	1		-9.88	19.91	0.50

Overall Maximum Deflections - Unfactored Loads

Load Combination	Span	Max. "-" Defl	Location in Span	Load Combination	Max. "+" Defl	Location in Span
H Only	1	0.0358	10.000		0.0000	0.000

SeaTech Inc.
Design Build Contractors
320 Overseas Boulevard
Sugarloaf Key, Florida 33042
305-872-0366
7552 Navarre Pkwy., Suite 7
Navarre, Florida 32566
850-939-3559

JOB
SHEET NO. OF
CALCULATED BY DATE
CHECKED BY DATE
SCALE

FIRST FLOOR SLAB
DESIGN PARAMETERS

WORST CASE: L = 13'4"

H = 6.33' (BOTTOM OF SLAB)

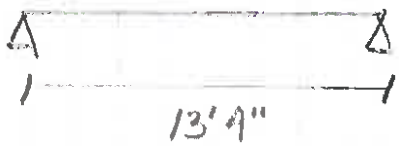

$W = (62.4\ PCF)(6.33') = 395\ PLF$

Sea Tech, Inc.
PO Box 420529
Summerland Key, FL 33042
305-294-9993 (Office)
305-872-8898 (Fax)

Title : Key West Bight Building
Engineer: Paul R. Semmes, PE
Project Desc.: Flood-Proof Foundation & 1st Floor, Supported on Auger Piles, Wo

Job # 11-217

Printed: 21 MAR 2012 12:55PM

File: C:\Users\paul\Documents\ENERCALC Data Files\key west bight ec6
ENERCALC, INC. 1983-2011, Build:6.12.3.14, Ver:6.12.3.14

Concrete Beam

Lic. # : KW-06003893 Licensee : SEATECH, INC.

Description : First Floor Slab

Material Properties

Calculations per ACI 318-08, IBC 2009, CBC 2010, ASCE 7-05

f'c	=	4.0 ksi	ϕ Phi Values	Flexure :	0.90
fr = f'c$^{1/2}$ * 7.50	=	474.342 psi		Shear :	0.750
ψ Density	=	145.0 pcf	β_1	=	0.850
λ LtWt Factor	=	1.0			
Elastic Modulus	=	3,122.0 ksi	Fy - Stirrups		40.0 ksi
fy - Main Rebar	=	60.0 ksi	E - Stirrups	=	29,000.0 ksi
E - Main Rebar	=	29,000.0 ksi	Stirrup Bar Size #	=	# 3
			Number of Resisting Legs Per Stirrup	=	2

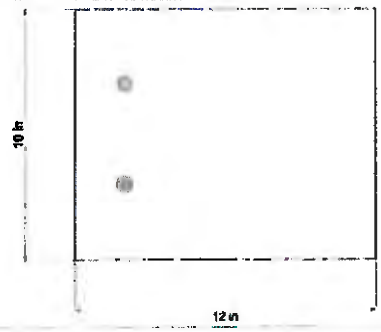

Load Combination 2006 IBC & ASCE 7-05

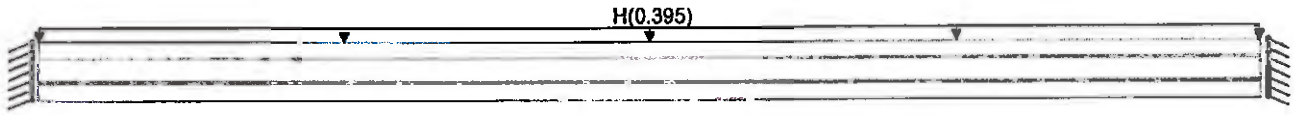

12" w x 10" h

Span=13.50 ft

Cross Section & Reinforcing Details

Rectangular Section, Width = 12.0 in, Height = 10.0 in
Span #1 Reinforcing....
1-#5 at 3.0 in from Bottom, from 0.0 to 13.50 ft in this span
1-#5 at 3.0 in from Top, from 0.0 to 13.50 ft in this span

Applied Loads

Service loads entered. Load Factors will be applied for calculations.

Beam self weight calculated and added to loads
Load for Span Number 1
Uniform Load : H = 0.3950 k/ft, Tributary Width = 1.0 ft, (Bouyancy)

DESIGN SUMMARY

Design OK

Maximum Bending Stress Ratio	=	0.931 : 1
Section used for this span		Typical Section
Mu : Applied		-11.801 k-ft
Mn * Phi : Allowable		12.678 k-ft
Load Combination		+1.20D+0.50Lr+1.60L+1.60H
Location of maximum on span		13.500ft
Span # where maximum occurs		Span # 1

Maximum Deflection

Max Downward L+Lr+S Deflection	0.000 in	Ratio =	0<360
Max Upward L+Lr+S Deflection	0.000 in	Ratio =	0<360
Max Downward Total Deflection	0.019 in	Ratio =	8580
Max Upward Total Deflection	0.000 in	Ratio =	999<180

Vertical Reactions - Unfactored

Support notation : Far left is #1

Load Combination	Support 1	Support 2
Overall MAXimum	2.666	2.666
D Only	0.816	0.816
H Only	2.666	2.666

Shear Stirrup Requirements

Entire Beam Span Length : PhiVc/2 < Vu <= PhiVc, Req'd Vs = Not Reqd 11.5.6.1, use stirrups spaced at 0.000 in

Maximum Forces & Stresses for Load Combinations

Load Combination / Segment Length	Span #	Location (ft) In Span	Bending Stress Results (k-ft) Mu : Max	Phi*Mnx	Stress Ratio
MAXimum BENDING Envelope					
Span # 1	1	13.500	-11.80	12.68	0.93
+1.40D					
Span # 1	1	13.500	-2.57	12.68	0.20
+1.20D+0.50Lr+1.60L+1.60H					
Span # 1	1	13.500	-11.80	12.68	0.93
+1.20D+1.60L+0.50S+1.60H					
Span # 1	1	13.500	-11.80	12.68	0.93
+0.90D+1.60W+1.60H					

Sea Tech, Inc.
PO Box 420529
Summerland Key, FL 33042
305-294-9993 (Office)
305-872-8898 (Fax)

Title : Key West Bight Building
Engineer: Paul R. Semmes, PE
Project Desc.: Flood-Proof Foundation & 1st Floor, Supported on Auger Piles, Wox

Job # 11-217

Printed: 21 MAR 2012 12:55PM

Concrete Beam

File: C:\Users\paul\Documents\ENERCALC Data Files\key west bight.ec6
ENERCALC, INC. 1983-2011, Build:6.12.3.14, Ver:6.12.3.14

Job # KW-06003893 Licensee: SEATECH INC

Description : First Floor Slab

Load Combination Segment Length	Span #	Location (ft) in Span	Bending Stress Results (k-ft) Mu : Max	Phi*Mnx	Stress Ratio
Span # 1	1	13.500	-11.25	12.68	0.89
+0.90D+E+1.60H					
Span # 1	1	13.500	-11.25	12.68	0.89

Overall Maximum Deflections - Unfactored Loads

Load Combination	Span	Max. "-" Defl	Location in Span	Load Combination	Max. "+" Defl	Location in Span
H Only	1	0.0189	6.885		0.0000	0.000

SeaTech Inc.
Design Build Contractors
880 Crane Boulevard
Sugarloaf Key, Florida 33042
305 872-0818
7552 Navarre Pkwy., Suite 7
Navarre, Florida 32566
850-939-3950

JOB
SHEET NO. OF
CALCULATED BY DATE
CHECKED BY DATE
SCALE

GRADE BEAM DESIGN PARAMETERS

CASE 1: INTERIOR BEAM L: 13'4"
TRIBUTARY = 11'8"

FLOOR SLAB D: 145 PCF (11.66') = 1691 PLF
L: 50 PSF (11.66') = 583 PLF

WORST CASE ——→ BOUYANCY F_b: 395 PSF (11.66') = 4608 PLF

CASE 2: INTERIOR BEAM L: 11'8"
TRIBUTARY = 13'4"

FLOOR SLAB D: 145 PCF (13.33') = 1933 PLF
L: 50 PSF (13.33') = 667 PLF

WORST CASE ——→ BOUYANCY F_b: 395 PSF (13.33') = 5265 PLF

SeaTech Inc.
Design Build Contractors
828 Crane Boulevard
Summerland Key, Florida 33042
305-872-9883
7552 Navarre Pkwy., Suite 7
Navarre, Florida 32566
850-939-3959

JOB
SHEET NO. OF
CALCULATED BY DATE
CHECKED BY DATE
SCALE

CASE 3: SIDE BEAMS L = 13'4"
TRIBUTARY = 5'10"

WORST CASE

FLOOR SLAB: D = 145 PCF (5.833) = 846 PLF
L = 40 PSF (5.833) = 233 PLF

CONC. WALL: D = 1739 PLF (SEE CALCS)
L = 383 PLF (SEE CALCS)

BOUYANCY: F_b = 395 PSF (5.833')
2304 PLF

CASE 4: FRONT + REAR L = 11'8"
TRIBUTARY = 6'8"

FLOOR SLAB: D = 145 PCF (6.66') = 967 PLF
L = 50 PSF (6.66') = 333 PLF

CONC. WALL: D = 2084 PLF (SEE CALCS)
L = 2589 PLF (SEE CALCS)

BOUYANCY: F_b = 395 PSF (6.66')
2633 PLF

SeaTech Inc.
Design Build Contractors
590 Crane Boulevard
Sugarloaf Key, Florida 33042
305-872-0888
7652 Navarre Pkwy., Suite 7
Navarre, Florida 32566
850-939-3959

JOB
SHEET NO. OF
CALCULATED BY DATE
CHECKED BY DATE
SCALE

CONCRETE WALL LOADING CALCULATIONS

SIDE WALLS ROOF: D: 15 PSF x 2' W: 46.7 PSF x 2'
L: 20 PSF x 2'

SECOND STORY WALL: D: 15 PSF x 10' = 150 PLF

SECOND STORY FLOOR: D: 15 PSF x 2' = 30 PLF
L: 125 PSF x 2' = 250 PLF

FIRST STORY WALL: D: (11.5/12 x 11' x 145 PCF)
1529 PLF

FRONT & REAR ROOF: D: 15 PSF x 13.5' W: 46.7 PSF
L: 20 PSF x 13.5' x 13.5

SECOND STORY WALL: D: 15 PSF x 10'

SECOND STORY FLOOR: D: 15 PSF x 13.5'
L: 125 PSF x 13.5'

FIRST STORY WALL: D = 1529 PLF

TOTAL D: 2084 PLF
L: 2251 PLF

ROOF TRIBUTARY - SIDE WALLS

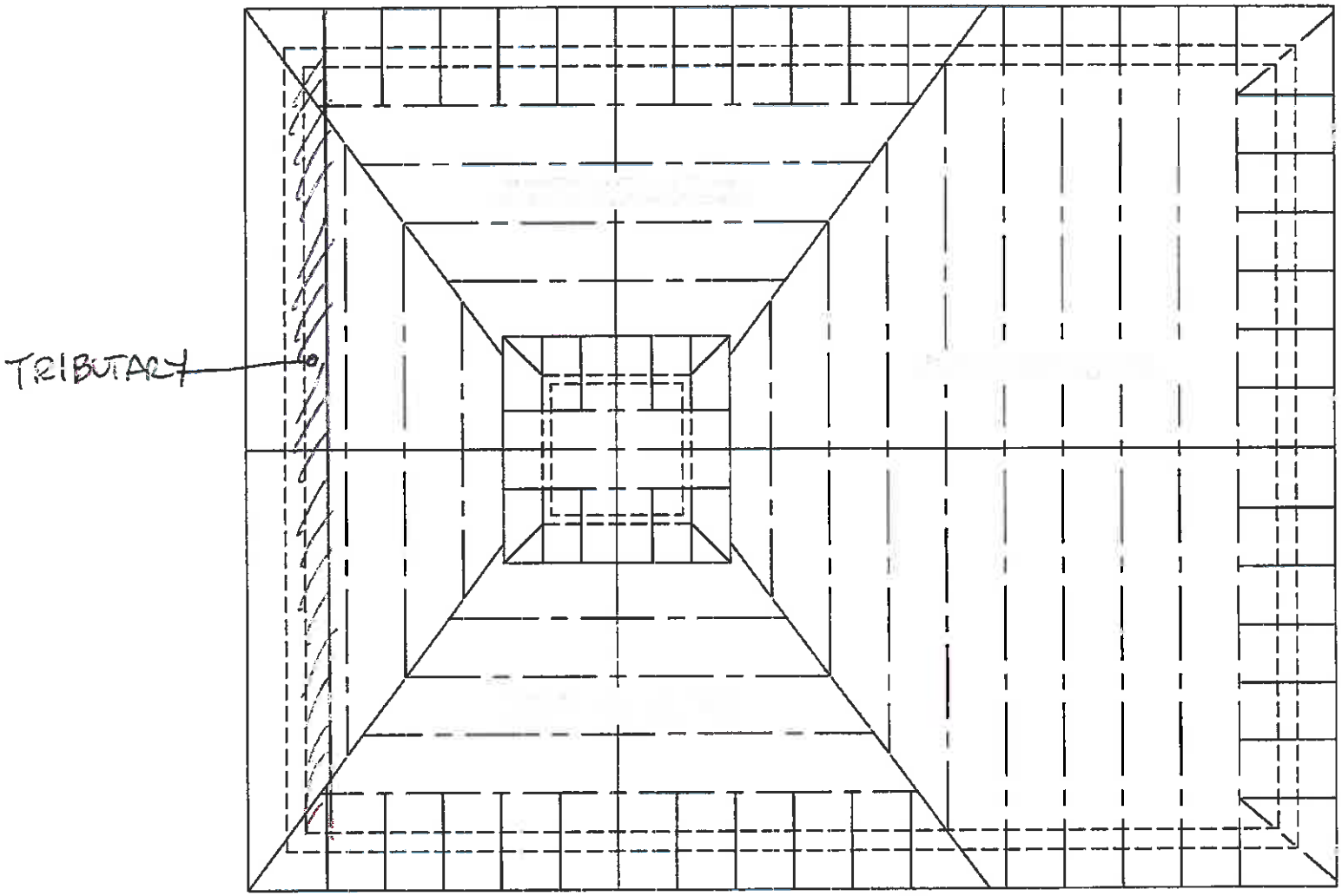

ROOF TRIBUTARY - FRONT + REAR

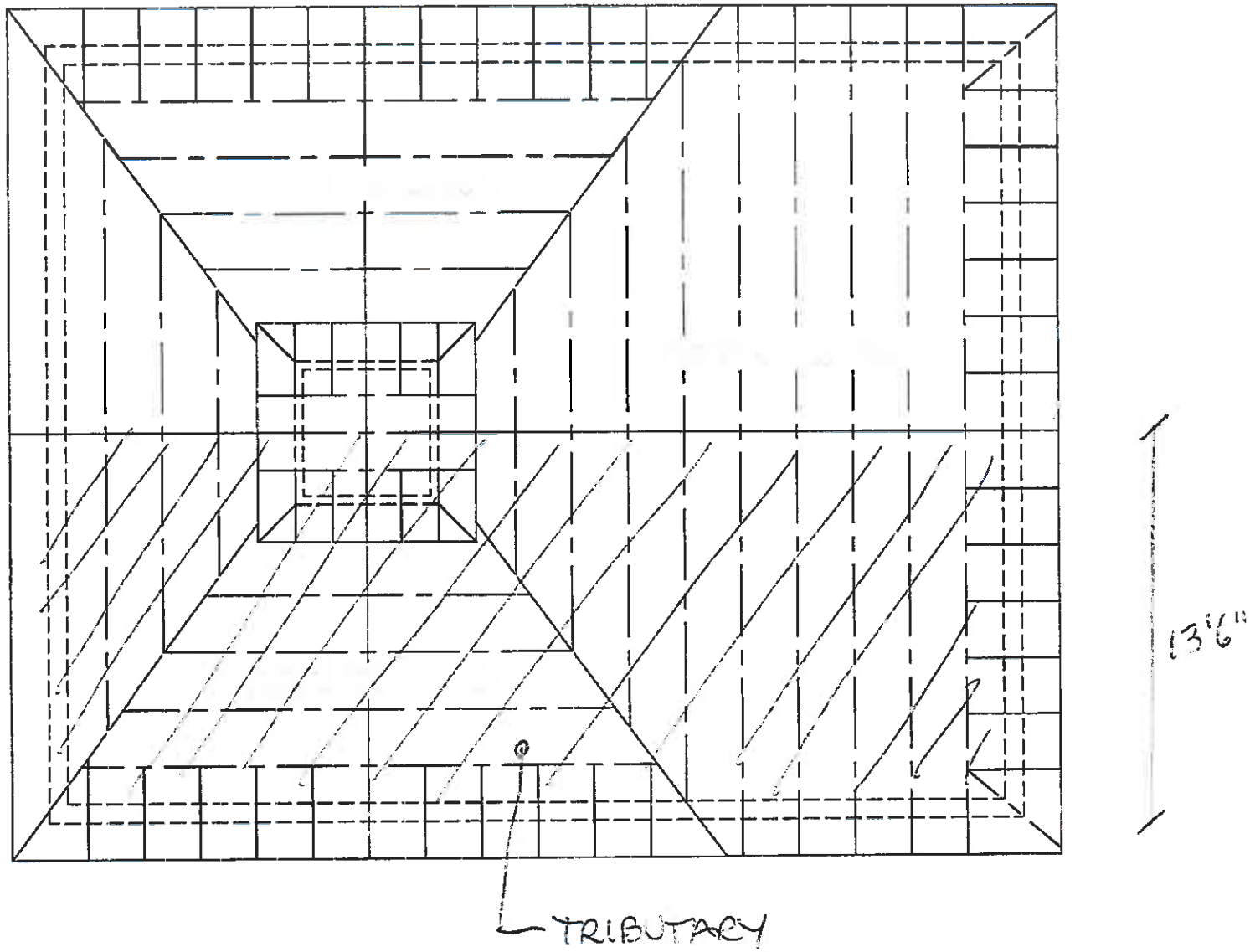

SECOND FLOOR TRIBUTARY - SIDE WALLS

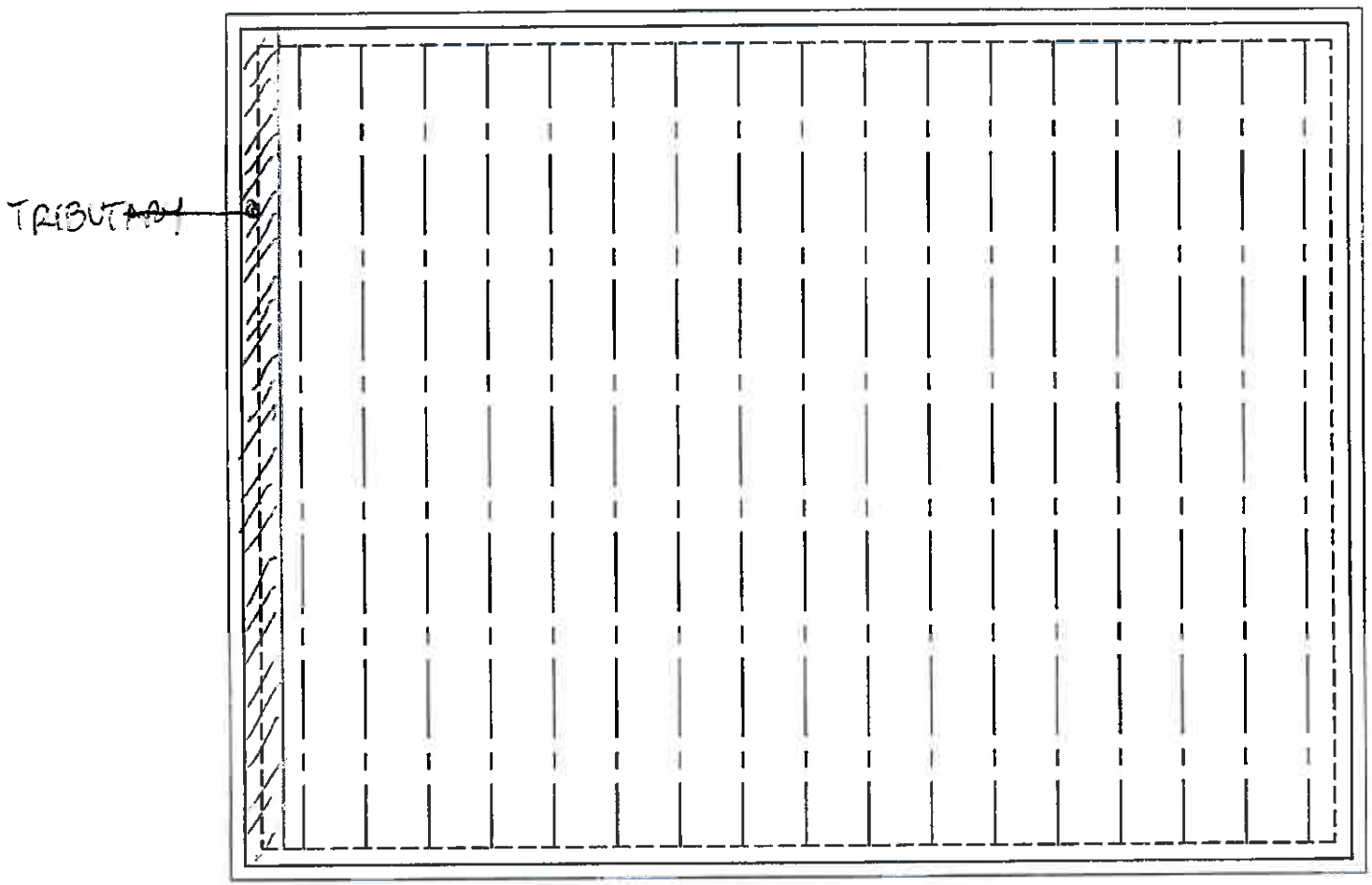

SECOND FLOOR TRIBUTARY - FRONT + REAR

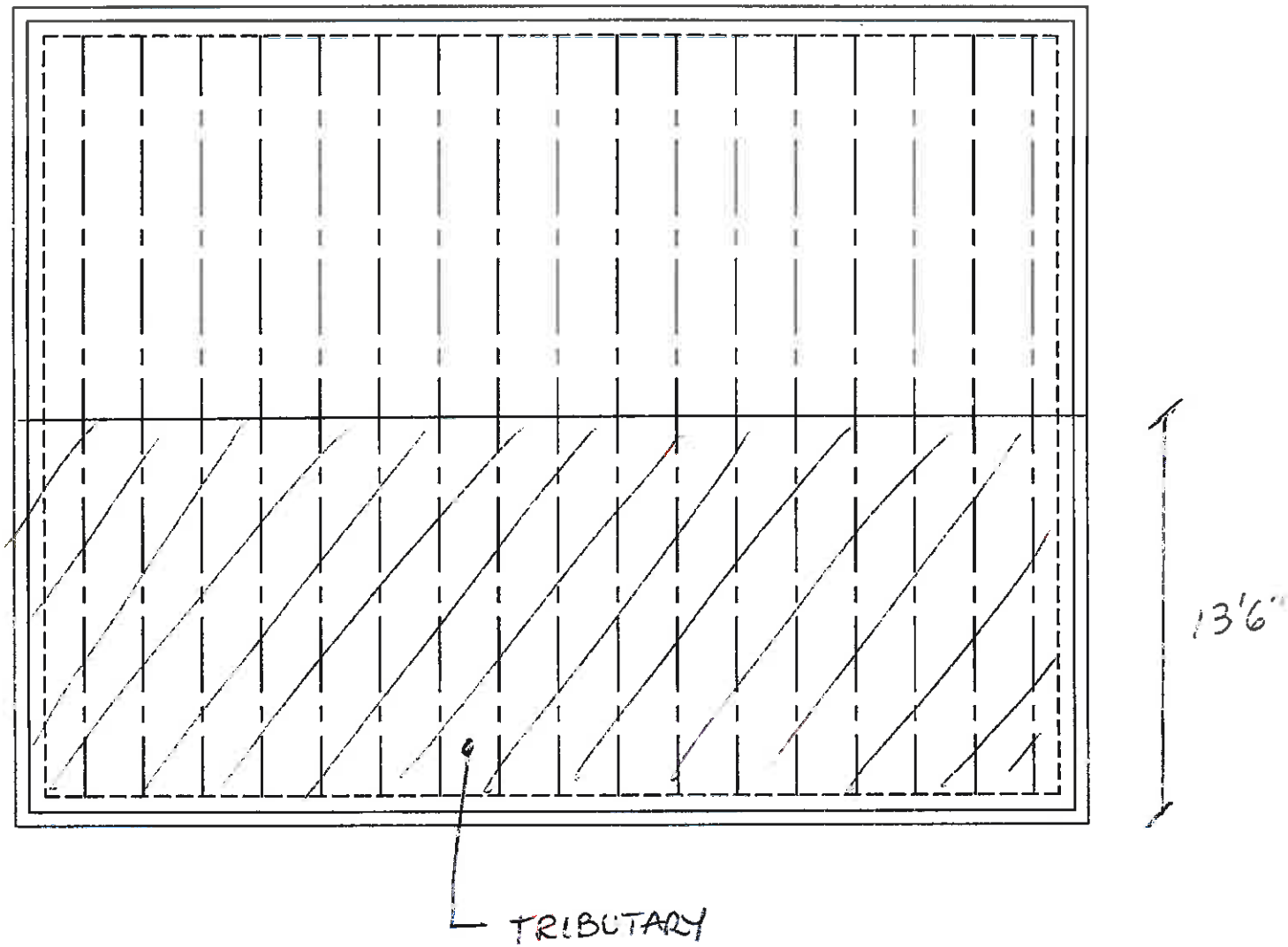

Sea Tech, Inc.
PO Box 420529
Summerland Key, FL 33042
305-294-9993 (Office)
305-872-8898 (Fax)

Title : Key West Bight Building
Engineer: Paul R. Semmes, PE
Project Desc.: Flood-Proof Foundation & 1st Floor, Supported on Auger Piles, Wo

Job # 11-217

Printed: 21 MAR 2012, 1:50PM

File: C:\Users\paul\Documents\ENERCALC Data Files\key west bight.ec6
ENERCALC, INC. 1983-2011, Build:6.12.3.14, Ver.6.12.3.14
Licensee : SEATECH,INC.

Concrete Beam

File # : KW06003893

Description : Grade Beam - Case 1

Material Properties

Calculations per ACI 318-08, IBC 2009, CBC 2010, ASCE 7-05

f'c	= 4.0 ksi	ϕ Phi Values	Flexure :	0.90
fr = f'c^1/2 * 7.50	= 474.342 psi		Shear :	0.750
ψ Density	= 145.0 pcf	β 1	=	0.850
λ LtWt Factor	= 1.0			
Elastic Modulus	= 3,122.0 ksi	Fy - Stirrups		40.0 ksi
fy - Main Rebar	= 60.0 ksi	E - Stirrups	=	29,000.0 ksi
E - Main Rebar	= 29,000.0 ksi	Stirrup Bar Size #	=	# 3
		Number of Resisting Legs Per Stirrup	=	2.0

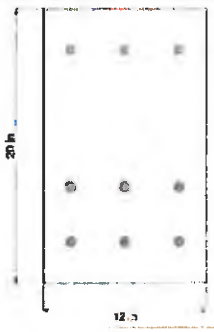

Load Combination 2006 IBC & ASCE 7-05

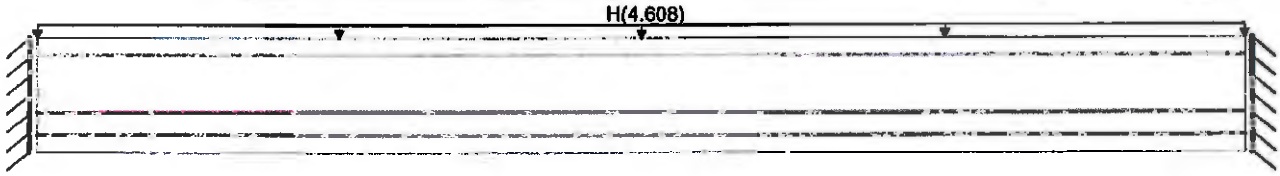

12" w x 20" h

Span=13.50 ft

Cross Section & Reinforcing Details

Rectangular Section, Width = 12.0 in, Height = 20.0 in
Span #1 Reinforcing....
3-#6 at 3.0 in from Bottom, from 0.0 to 13.50 ft in this span
3-#6 at 7.0 in from Bottom, from 0.0 to 13.50 ft in this span
3-#6 at 3.0 in from Top, from 0.0 to 13.50 ft in this span

Applied Loads

Service loads entered. Load Factors will be applied for calculations.

Beam self weight calculated and added to loads
Load for Span Number 1
Uniform Load : H = 4.608 k/ft, Tributary Width = 1.0 ft, (Bouyancy)

DESIGN SUMMARY

Design OK

Maximum Bending Stress Ratio	= 0.965 : 1	Maximum Deflection	
Section used for this span	Typical Section	Max Downward L+Lr+S Deflection	0.000 in Ratio = 0<360
Mu : Applied	-116.378 k-ft	Max Upward L+Lr+S Deflection	0.000 in Ratio = 0<360
Mn * Phi : Allowable	120.564 k-ft	Max Downward Total Deflection	0.046 in Ratio = 3556
Load Combination	+1.20D+0.50Lr+1.60L+1.60H	Max Upward Total Deflection	0.000 in Ratio = 999<180
Location of maximum on span	13.500ft		
Span # where maximum occurs	Span # 1		

Vertical Reactions - Unfactored

Support notation : Far left is #1

Load Combination	Support 1	Support 2
Overall MAXimum	31.104	31.104
D Only	1.631	1.631
H Only	31.104	31.104

Shear Stirrup Requirements

Between 0.00 to 3.36 ft, PhiVc < Vu, Req'd Vs = 0.1664, use stirrups spaced at 3.000 in
Between 3.39 to 5.40 ft, PhiVc/2 < Vu <= PhiVc, Req'd Vs = Min 11.4.5.1, use stirrups spaced at 8.000 in
Between 5.43 to 8.07 ft, Vu < PhiVc/2, Req'd Vs = Not Reqd, use stirrups spaced at 0.000 in
Between 8.10 to 10.11 ft, PhiVc/2 < Vu <= PhiVc, Req'd Vs = Min 11.4.5.1, use stirrups spaced at 8.000 in
Between 10.14 to 13.47 ft, PhiVc < Vu, Req'd Vs = 28.663, use stirrups spaced at 3.000 in

Maximum Forces & Stresses for Load Combinations

Load Combination / Segment Length	Span #	Location (ft) in Span	Bending Stress Results (k-ft) Mu : Max	Phi*Mnx	Stress Ratio
MAXimum BENDING Envelope					
Span # 1	1	13.500	-116.38	120.56	0.97
+1.40D					
Span # 1	1	13.500	-5.14	120.56	0.04

Sea Tech, Inc.
PO Box 420529
Summerland Key, FL
33042
305-294-9993 (Office)
305-872-8898 (Fax)

Title : Key West Bight Building
Job # 11-217
Engineer: Paul R. Semmes, PE
Project Desc.: Flood-Proof Foundation & 1st Floor, Supported on Auger Piles, Wo

Printed: 21 MAR 2012, 1:50PM

Concrete Beam

File: C:\Users\paul\Documents\ENERCALC Data Files\key west bight.ec6
ENERCALC, INC. 1983-2011, Build:6.12.3.14, Ver:6.12.3.14

Lic. # : KW-06003893
Licensed to SEATECH INC.

Description : Grade Beam - Case 1

Load Combination / Segment Length	Span #	Location (ft) in Span	Bending Stress Results (k-ft) Mu : Max	Phi*Mnx	Stress Ratio
+1.20D+0.50Lr+1.60L+1.60H					
Span # 1	1	13.500	-116.38	120.56	0.97
+1.20D+1.60L+0.50S+1.60H					
Span # 1	1	13.500	-116.38	120.56	0.97
+0.90D+1.60W+1.60H					
Span # 1	1	13.500	-115.28	120.56	0.96
+0.90D+E+1.60H					
Span # 1	1	13.500	-115.28	120.56	0.96

Overall Maximum Deflections - Unfactored Loads

Load Combination	Span	Max. "-" Defl	Location in Span	Load Combination	Max. "+" Defl	Location in Span
H Only	1	0.0455	6.885		0.0000	0.000

Sea Tech, Inc.
PO Box 420529
Summerland Key, FL 33042
305-294-9993 (Office)
305-872-8898 (Fax)

Title : Key West Bight Building
Engineer: Paul R. Semmes, PE
Project Desc.: Flood-Proof Foundation & 1st Floor, Supported on Auger Piles, Wo

Job # 11-217

Printed: 21 MAR 2012, 1.50PM

Concrete Beam

File: C:\Users\paul\Documents\ENERCALC Data Files\key west bight.ec6
ENERCALC, INC. 1983-2011, Build:6.12.3.14, Ver.6.12.3.14
Lic. # : KW-06003893 Licensee : SEATECH,INC.

Description : Grade Beam - Case 2

Material Properties

Calculations per ACI 318-08, IBC 2009, CBC 2010, ASCE 7-05

f'c	= 4.0 ksi	ϕ Phi Values	Flexure :	0.90
fr = f'c^1/2 * 7.50	= 474.342 psi		Shear :	0.750
ψ Density	= 145.0 pcf	β_1	=	0.850
λ LtWt Factor	= 1.0			
Elastic Modulus	= 3,122.0 ksi	Fy - Stirrups		40.0 ksi
fy - Main Rebar	= 60.0 ksi	E - Stirrups	=	29,000.0 ksi
E - Main Rebar	= 29,000.0 ksi	Stirrup Bar Size #	=	# 3
		Number of Resisting Legs Per Stirrup	=	2.0

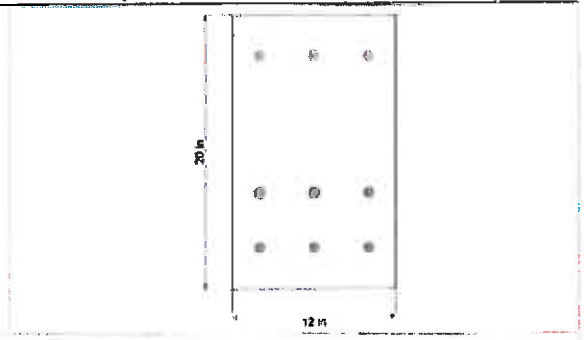

Load Combination 2006 IBC & ASCE 7-05

12" w x 20" h

Span=11.750 ft

Cross Section & Reinforcing Details

Rectangular Section, Width = 12.0 in, Height = 20.0 in
Span #1 Reinforcing....
3-#6 at 3.0 in from Bottom, from 0.0 to 11.750 ft in this span
3-#6 at 7.0 in from Bottom, from 0.0 to 11.750 ft in this span
3-#6 at 3.0 in from Top, from 0.0 to 11.750 ft in this span

Applied Loads

Service loads entered. Load Factors will be applied for calculations.

Beam self weight calculated and added to loads
Load for Span Number 1
Uniform Load : H = 5.265 k/ft, Tributary Width = 1.0 ft, (Bouyancy)

DESIGN SUMMARY

Design OK

Maximum Bending Stress Ratio =	0.832 : 1	Maximum Deflection	
Section used for this span	Typical Section	Max Downward L+Lr+S Deflection	0.000 in Ratio = 0<360
Mu : Applied	-100.256 k-ft	Max Upward L+Lr+S Deflection	0.000 in Ratio = 0<360
Mn * Phi : Allowable	120.564 k-ft	Max Downward Total Deflection	0.026 in Ratio = 5327
Load Combination	+1.20D+0.50Lr+1.60L+1.60H	Max Upward Total Deflection	0.000 in Ratio = 999<180
Location of maximum on span	11.750ft		
Span # where maximum occurs	Span # 1		

Vertical Reactions - Unfactored

Support notation : Far left is #1

Load Combination	Support 1	Support 2
Overall MAXimum	30.932	30.932
D Only	1.420	1.420
H Only	30.932	30.932

Shear Stirrup Requirements

Between 0.00 to 2.90 ft, PhiVc < Vu, Req'd Vs = 0.1282, use stirrups spaced at 4.000 in
Between 2.92 to 4.67 ft, PhiVc/2 < Vu <= PhiVc, Req'd Vs = Min 11.4.5.1, use stirrups spaced at 8.000 in
Between 4.70 to 7.05 ft, Vu < PhiVc/2, Req'd Vs = Not Reqd, use stirrups spaced at 0.000 in
Between 7.08 to 8.83 ft, PhiVc/2 < Vu <= PhiVc, Req'd Vs = Min 11.4.5.1, use stirrups spaced at 8.000 in
Between 8.85 to 11.72 ft, PhiVc < Vu, Req'd Vs = 27.438, use stirrups spaced at 4.000 in

Maximum Forces & Stresses for Load Combinations

Load Combination / Segment Length	Span #	Location (ft) in Span	Bending Stress Results (k-ft) Mu : Max	Phi*Mnx	Stress Ratio
MAXimum BENDING Envelope					
Span # 1	1	11.750	-100.26	120.56	0.83
+1.40D					
Span # 1	1	11.750	-3.89	120.56	0.03

Sea Tech, Inc.
PO Box 420529
Summerland Key, FL
33042
305-294-9993 (Office)
305-872-8898 (Fax)

Title : Key West Bight Building
Engineer: Paul R. Semmes, PE
Project Desc.: Flood-Proof Foundation & 1st Floor, Supported on Auger Piles, Wo

Job # 11-217

Printed: 21 MAR 2012, 1:50PM

File: C:\Users\paul\Documents\ENERCALC Data Files\key west bight.ec6
ENERCALC, INC. 1983-2011, Build:6.12.3.14, Ver:6.12.3.14

Concrete Beam

Lic. #: KW-06003893 Licensee : SEA TECH, INC.

Description : Grade Beam - Case 2

Load Combination Segment Length	Span #	Location (ft) in Span	Bending Stress Results (k-ft) Mu : Max	Phi*Mnx	Stress Ratio
+1.20D+0.50Lr+1.60L+1.60H					
Span # 1	1	11.750	-100.26	120.56	0.83
+1.20D+1.60L+0.50S+1.60H					
Span # 1	1	11.750	-100.26	120.56	0.83
+0.90D+1.60W+1.60H					
Span # 1	1	11.750	-99.42	120.56	0.82
+0.90D+E+1.60H					
Span # 1	1	11.750	-99.42	120.56	0.82

Overall Maximum Deflections - Unfactored Loads

Load Combination	Span	Max. "-" Defl	Location in Span	Load Combination	Max. "+" Defl	Location in Span
H Only	1	0.0265	5.993		0.0000	0.000

Sea Tech, Inc.
PO Box 420529
Summerland Key, FL 33042
305-294-9993 (Office)
305-872-8898 (Fax)

Title : Key West Bight Building
Engineer: Paul R. Semmes, PE
Project Desc.: Flood-Proof Foundation & 1st Floor, Supported on Auger Piles, Wo

Job # 11-217

Printed: 21 MAR 2012, 1:51PM

Concrete Beam

File: C:\Users\paul\Documents\ENERCALC Data Files\key west bight.ec6
ENERCALC, INC. 1983-2011, Build:6.12.3.14, Ver.6.12.3.14

Lic. # : KW-06003893 — Licensee : SEATECH INC

Description : Grade Beam - Case 3

Material Properties

Calculations per ACI 318-08, IBC 2009, CBC 2010, ASCE 7-05

f'c	=	4.0 ksi	ϕ Phi Values	Flexure :	0.90
fr = f'c^1/2 * 7.50	=	474.342 psi		Shear :	0.750
ψ Density	=	145.0 pcf	β_1	=	0.850
λ LtWt Factor	=	1.0			
Elastic Modulus	=	3,122.0 ksi	Fy - Stirrups		40.0 ksi
fy - Main Rebar	=	60.0 ksi	E - Stirrups	=	29,000.0 ksi
E - Main Rebar	=	29,000.0 ksi	Stirrup Bar Size #	=	# 3
			Number of Resisting Legs Per Stirrup	=	2.0

Load Combination 2006 IBC & ASCE 7-05

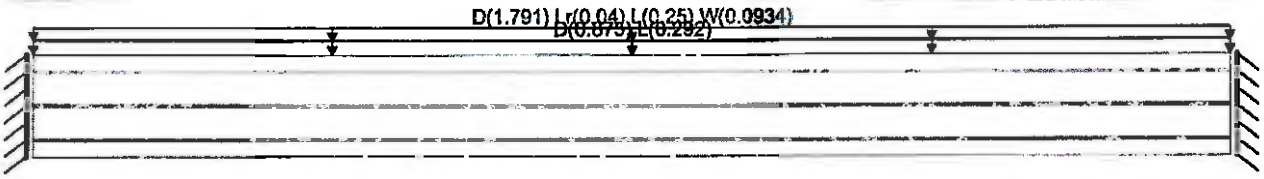

12" w x 18" h

Span=13.50 ft

Cross Section & Reinforcing Details

Rectangular Section, Width = 12.0 in, Height = 18.0 in
Span #1 Reinforcing....
3-#6 at 3.0 in from Bottom, from 0.0 to 13.50 ft in this span
2-#6 at 9.0 in from Bottom, from 0.0 to 13.50 ft in this span
3-#6 at 3.0 in from Top, from 0.0 to 13.50 ft in this span

Applied Loads

Service loads entered. Load Factors will be applied for calculations.

Beam self weight calculated and added to loads
Load for Span Number 1
Uniform Load : D = 0.8750, L = 0.2920 k/ft, Tributary Width = 1.0 ft, (Floor Loadings)
Uniform Load : D = 1.791, Lr = 0.040, L = 0.250, W = 0.09340 k/ft, Tributary Width = 1.0 ft, (Wall Loadings)

DESIGN SUMMARY

Design OK

Maximum Bending Stress Ratio =		0.607 : 1
Section used for this span		Typical Section
Mu : Applied		-66.026 k-ft
Mn * Phi : Allowable		108.794 k-ft
Load Combination		+1.20D+0.50Lr+1.60L+1.60H
Location of maximum on span		13.500ft
Span # where maximum occurs		Span # 1

Maximum Deflection

Max Downward L+Lr+S Deflection	0.012 in	Ratio =	13542
Max Upward L+Lr+S Deflection	0.000 in	Ratio =	0 <360
Max Downward Total Deflection	0.044 in	Ratio =	3721
Max Upward Total Deflection	0.000 in	Ratio =	999 <180

Vertical Reactions - Unfactored

Support notation : Far left is #1

Load Combination	Support 1	Support 2
Overall MAXimum	23.753	23.753
D Only	19.464	19.464
L Only	3.658	3.658
Lr Only	0.270	0.270
L+Lr	3.928	3.928
W Only	0.630	0.630
D+Lr	19.734	19.734
D+L	23.122	23.122
D+L+Lr	23.392	23.392
D+W	20.094	20.094
D+L+W	23.753	23.753
D+Lr+W	20.364	20.364

Shear Stirrup Requirements

Between 0.00 to 4.41 ft, PhiVc/2 < Vu <= PhiVc, Req'd Vs = Min 11.4.5.1, use stirrups spaced at 7.000 in
Between 4.44 to 9.06 ft, Vu < PhiVc/2, Req'd Vs = Not Reqd, use stirrups spaced at 0.000 in
Between 9.09 to 13.47 ft, PhiVc < Vu, Req'd Vs = 9.456, use stirrups spaced at 7.000 in

Sea Tech, Inc.
PO Box 420529
Summerland Key, FL 33042
305-294-9993 (Office)
305-872-8898 (Fax)

Title : Key West Bight Building
Engineer: Paul R. Semmes, PE
Project Desc.: Flood-Proof Foundation & 1st Floor, Supported on Auger Piles, Wo

Job # 11-217

Printed: 21 MAR 2012, 1:51PM

File: C:\Users\paul\Documents\ENERCALC Data Files\key west bight.ec6
ENERCALC, INC. 1983-2011, Build:6.12.3.14, Ver.6.12.3.14
Licensee : SEATECH, INC.

Concrete Beam

Job # : KW-06003393

Description : Grade Beam - Case 3

Maximum Forces & Stresses for Load Combinations

Load Combination / Segment Length	Span #	Location (ft) in Span	Bending Stress Results (k-ft) Mu : Max	Phi*Mnx	Stress Ratio
MAXimum BENDING Envelope					
Span # 1	1	13.500	-66.03	108.79	0.61
+1.40D					
Span # 1	1	13.500	-61.31	108.79	0.56
+1.20D+0.50Lr+1.60L+1.60H					
Span # 1	1	13.500	-66.03	108.79	0.61
+1.20D+1.60L+0.50S+1.60H					
Span # 1	1	13.500	-65.72	108.79	0.60
+1.20D+1.60Lr+0.50L					
Span # 1	1	13.500	-57.64	108.79	0.53
+1.20D+1.60Lr+0.80W					
Span # 1	1	13.500	-54.66	108.79	0.50
+1.20D+0.50L+1.60S					
Span # 1	1	13.500	-56.67	108.79	0.52
+1.20D+1.60S+0.80W					
Span # 1	1	13.500	-53.69	108.79	0.49
+1.20D+0.50Lr+0.50L+1.60W					
Span # 1	1	13.500	-59.24	108.79	0.54
+1.20D+0.50L+0.50S+1.60W					
Span # 1	1	13.500	-58.94	108.79	0.54
+1.20D+0.50L+0.20S+E					
Span # 1	1	13.500	-56.67	108.79	0.52
+0.90D+1.60W+1.60H					
Span # 1	1	13.500	-41.68	108.79	0.38

Overall Maximum Deflections - Unfactored Loads

Load Combination	Span	Max. "-" Defl	Location in Span	Load Combination	Max. "+" Defl	Location in Span
D+L+W	1	0.0435	6.885		0.0000	0.000

Sea Tech, Inc.
PO Box 420529
Summerland Key, FL 33042
305-294-9993 (Office)
305-872-8898 (Fax)

Title : Key West Bight Building
Job # 11-217
Engineer: Paul R. Semmes, PE
Project Desc.: Flood-Proof Foundation & 1st Floor, Supported on Auger Piles, Wo

Printed: 21 MAR 2012 1:51PM

Concrete Beam

File: C:\Users\paul\Documents\ENERCALC Data Files\key west bight.ec6
ENERCALC, INC. 1983-2011, Build:6.12.3.14, Ver:6.12.3.14

Lic. # : KW-06003893 Licensee : SEATECH, INC.

Description : Grade Beam - Case 4

Material Properties

Calculations per ACI 318-08, IBC 2009, CBC 2010, ASCE 7-05

f'c	=	4.0 ksi	ϕ Phi Values	Flexure :	0.90
fr = f'c^1/2 * 7.50	=	474.342 psi		Shear :	0.750
ψ Density	=	145.0 pcf	β_1	=	0.850
λ LtWt Factor	=	1.0			
Elastic Modulus	=	3,122.0 ksi	Fy - Stirrups		40.0 ksi
fy - Main Rebar	=	60.0 ksi	E - Stirrups	=	29,000.0 ksi
E - Main Rebar	=	29,000.0 ksi	Stirrup Bar Size #	=	# 3
			Number of Resisting Legs Per Stirrup	=	2.0

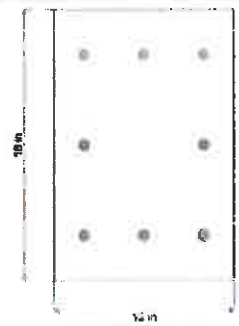

Load Combination 2006 IBC & ASCE 7-05

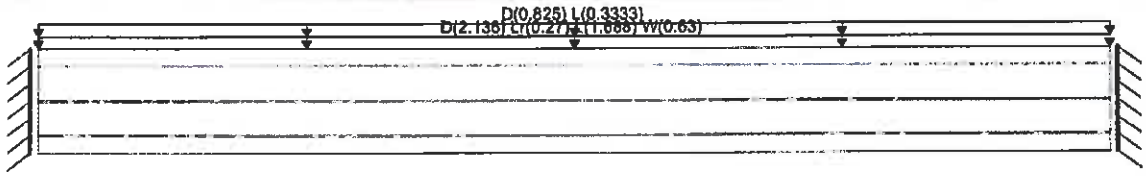

12" w x 18" h

Span=11.750 ft

Cross Section & Reinforcing Details

Rectangular Section, Width = 12.0 in, Height = 18.0 in
Span #1 Reinforcing....
3-#6 at 3.0 in from Bottom, from 0.0 to 11.750 ft in this span
2-#8 at 9.0 in from Bottom, from 0.0 to 11.750 ft in this span
3-#6 at 3.0 in from Top, from 0.0 to 11.750 ft in this span

Applied Loads

Service loads entered. Load Factors will be applied for calculations.

Beam self weight calculated and added to loads
Load for Span Number 1
Uniform Load : D = 2.136, Lr = 0.270, L = 1.688, W = 0.630 k/ft, Tributary Width = 1.0 ft, (Wall Loadings)
Uniform Load : D = 0.8250, L = 0.3333 k/ft, Tributary Width = 1.0 ft, (Floor Loadings)

DESIGN SUMMARY

Design OK

Maximum Bending Stress Ratio	=	0.760 : 1
Section used for this span		Typical Section
Mu : Applied		-82.645 k-ft
Mn * Phi : Allowable		108.794 k-ft
Load Combination		+1.20D+0.50Lr+1.60L+1.60H
Location of maximum on span		11.750ft
Span # where maximum occurs		Span # 1

Maximum Deflection

Max Downward L+Lr+S Deflection	0.036 in	Ratio =	3924
Max Upward L+Lr+S Deflection	0.000 in	Ratio =	0<360
Max Downward Total Deflection	0.054 in	Ratio =	2632
Max Upward Total Deflection	0.000 in	Ratio =	999<180

Vertical Reactions - Unfactored

Support notation : Far left is #1

Load Combination	Support 1	Support 2
Overall MAXimum	34.250	34.250
D Only	18.674	18.674
L Only	11.875	11.875
Lr Only	1.586	1.586
L+Lr	13.461	13.461
W Only	3.701	3.701
D+Lr	20.260	20.260
D+L	30.549	30.549
D+L+Lr	32.135	32.135
D+W	22.375	22.375
D+L+W	34.250	34.250
D+Lr+W	23.961	23.961

Shear Stirrup Requirements

Between 0.00 to 2.69 ft, PhiVc < Vu, Req'd Vs = 0.06025, use stirrups spaced at 4.000 in
Between 2.72 to 4.60 ft, PhiVc/2 < Vu <= PhiVc, Req'd Vs = Min 11.4.5.1, use stirrups spaced at 7.000 in
Between 4.62 to 7.13 ft, Vu < PhiVc/2, Req'd Vs = Not Reqd, use stirrups spaced at 0.000 in

Sea Tech, Inc.
PO Box 420529
Summerland Key, FL 33042
305-294-9993 (Office)
305-872-8898 (Fax)

Title : Key West Bight Building
Engineer: Paul R. Semmes, PE
Project Desc.: Flood-Proof Foundation & 1st Floor, Supported on Auger Piles, Wo

Job # 11-217

Printed: 21 MAR 2012, 1:51PM

Concrete Beam

File: C:\Users\paul\Documents\ENERCALC Data Files\key west b'ght.ec6
ENERCALC, INC. 1983-2011, Build:6.12.3.14, Ver:6.12.3.14

Lic. # : KW-06003893 Licensee : SEATECH INC.

Description : Grade Beam - Case 4

Shear Stirrup Requirements

Between 7.15 to 9.03 ft, PhiVc/2 < Vu <= PhiVc, Req'd Vs = Min 11.4.5.1, use stirrups spaced at 7.000 in
Between 9.06 to 11.72 ft, PhiVc < Vu, Req'd Vs = 21.767, use stirrups spaced at 4.000 in

Maximum Forces & Stresses for Load Combinations

Load Combination / Segment Length	Span #	Location (ft) in Span	Bending Stress Results (k-ft) Mu : Max	Phi*Mnx	Stress Ratio
MAXimum BENDING Envelope					
Span # 1	1	11.750	-82.64	108.79	0.76
+1.40D					
Span # 1	1	11.750	-51.20	108.79	0.47
+1.20D+0.50Lr+1.60L+1.60H					
Span # 1	1	11.750	-82.64	108.79	0.76
+1.20D+1.60L+0.50S+1.60H					
Span # 1	1	11.750	-81.09	108.79	0.75
+1.20D+1.60Lr+0.50L					
Span # 1	1	11.750	-60.48	108.79	0.56
+1.20D+1.60Lr+0.80W					
Span # 1	1	11.750	-54.65	108.79	0.50
+1.20D+0.50L+1.60S					
Span # 1	1	11.750	-55.51	108.79	0.51
+1.20D+1.60S+0.80W					
Span # 1	1	11.750	-49.68	108.79	0.46
+1.20D+0.50Lr+0.50L+1.60W					
Span # 1	1	11.750	-68.66	108.79	0.63
+1.20D+0.50L+0.50S+1.60W					
Span # 1	1	11.750	-67.11	108.79	0.62
+1.20D+0.50L+0.20S+E					
Span # 1	1	11.750	-55.51	108.79	0.51
+0.90D+1.60W+1.60H					
Span # 1	1	11.750	-44.51	108.79	0.41

Overall Maximum Deflections - Unfactored Loads

Load Combination	Span	Max. "-" Defl	Location in Span	Load Combination	Max. "+" Defl	Location in Span
D+L+W	1	0.0536	5.993		0.0000	0.000

SeaTech inc.
Design Build Contractors
530 Crane Boulevard
Sugarloaf Key, Florida 33042
305-872-0656
7552 Navarre Pkwy., Suite 7
Navarre, Florida 32566
850-939-3959

JOB
SHEET NO. OF
CALCULATED BY DATE
CHECKED BY DATE
SCALE

AUGER PILE LOAD CALCULATIONS

AUGER PILE A, CENTER PILES a: 156 SF

D: (156 SF)(121 PSF) = 18,876 #
L: (156 SF)(100 PSF) = 15,556 #
D: (77 LF)(120.8 PLF) = 7658 #

#: (156 SF)(395 PSF) = 61,620 #

Perez Engineering & Development, In
1010 Kennedy Drive, Suite 201
Key West, FL
33040
305-293-9440 (Office)
305-296-0243 (Fax)

Project Title: Key West Bight Building
Engineer: Paul R. Semmes, PE Project ID: 11-217
Project Descr: Flood-Proof Foundation & 1st Floor, Supported on Auger Piles, Wood-Framed 2nd Floor & Roof Structur

Printed: 3 OCT 2013, 8:28AM

Concrete Column

File = C:\Users\paul\DOCUME~1\ENERCA~1\KEYWES~1.EC6
ENERCALC, INC. 1983-2013, Build:6.13.8.31, Ver:6.13.8.31

Lic. # : KW-06003893 Licensee : FLORIDA BUILDING CONSULTANTS, INC.

Description : Auger Piles - A

Code References

Calculations per
Load Combinations Used : ASCE 7-10

[redacted]

fc : Concrete 28 day strength	=	4.0 ksi
E =	=	3,122.0 ksi
Density	=	145.0 pcf
β	=	0.850
fy - Main Rebar	=	60.0 ksi
E - Main Rebar	=	29,000.0 ksi
Allow. Reinforcing Limits		*ASTM A615 Bars Used*
Min. Reinf.	=	1.0 %
Max. Reinf.	=	8.0 %

Load Combination : ASCE 7-10

Overall Column Height = 18.0 ft
End Fixity Top Fixed, Bottom Fixed
Brace condition for deflection (buckling) along columns :
X-X (width) axis :
Fully braced against buckling along X-X Axis
Y-Y (depth) axis :
Fully braced against buckling along Y-Y Axis

Column Cross Section

Column Dimensions :18.0in Diameter, Column Edge to Rebar Edge
Cover = 2.0in

Column Reinforcing : 6.0 - #6 bars

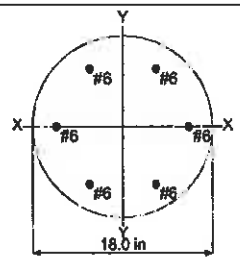

Applied Loads

Entered loads are factored per load combinations specified by user.

Column self weight included : 4,612.25 lbs * Dead Load Factor
AXIAL LOADS . . .
Building: Axial Load at 18.0 ft above base, D = 21.50, L = 15.560, H = -61.60 k

DESIGN SUMMARY

Load Combination +1.20D+1.60Lr+0.50L
Location of max.above base 17.879 ft

Maximum Stress Ratio 0.065 : 1
Ratio = (Pu^2+Mu^2)^.5 / (PhiPn^2+PhiMn^2)^.5

Pu =	39.115 k	φ * Pn =	603.70 k
Mu-x =	0.0 k-ft	φ * Mn-x =	0.0 k-ft
Mu-y =	0.0 k-ft	φ * Mn-y =	0.0 k-ft
Mu Angle =	0.0 deg		
Mu at Angle =	0.0 k-ft	φMn at Angle =	0.0 k-ft

Pn & Mn values located at Pu-Mu vector intersection with capacity curve

Column Capacities . . .

Pnmax : Nominal Max. Compressive Axial Capacity	1,014.62 k
Pnmin : Nominal Min. Tension Axial Capacity	-158.40 k
φ Pn, max : Usable Compressive Axial Capacity	603.70 k
φ Pn, min : Usable Tension Axial Capacity	-110.880 k

Maximum SERVICE Load Reactions . .

Top along Y-Y	0.0 k	Bottom along Y-Y	0.0 k
Top along X-X	0.0 k	Bottom along X-X	0.0 k

Maximum SERVICE Load Deflections . . .

Along Y-Y 0.0 in at 0.0 ft above base
for load combination :

Along X-X 0.0 in at 0.0 ft above base
for load combination :

General Section Information . φ = 0.70 β = 0.850 θ = 0.850
ρ : % Reinforcing 1.037 % Rebar % Ok
Reinforcing Area 2.640 in^2
Concrete Area 254.469 in^2

Governing Load Combination Results

Governing Factored Load Combination	Moment Source X-X	Moment Source Y-Y	Dist. from base ft	Axial Load k Pu	φ * Pn	δx	δx * Mux	δy	δy * Muy	Bending Analysis k-ft Alpha (deg)	δ Mu	φ Mn	Utilization Ratio
+1.40D			17.88	36.56	603.70					0.000			0.061

Perez Engineering & Development, In
1010 Kennedy Drive, Suite 201
Key West, FL
33040
305-293-9440 (Office)
305-296-0243 (Fax)

Project Title: Key West Bight Building
Engineer: Paul R. Semmes, PE Project ID: 11-217
Project Descr: Flood-Proof Foundation & 1st Floor, Supported on Auger Piles, Wood-Framed 2nd Floor & Roof Structur

Printed: 3 OCT 2013, 8:28AM
File = C:\Users\paul\DOCUME~1\ENERCA~1\KEYWES~1.EC6
ENERCALC, INC. 1983-2013, Build:6.13.8.31, Ver:6.13.8.31

Concrete Column

Lic. # : KW-06003893 Licensee : FLORIDA BUILDING CONSULTANTS INC

Description : Auger Piles - A

Governing Load Combination Results

Governing Factored Load Combination	Moment Source X-X	Moment Source Y-Y	Dist. from base ft	Axial Load Pu k	φ * Pn	δx	δx * Mux	δy	δy * Muy	Bending Analysis Alpha (deg)	k-ft δ Mu	φ Mn	Utilization Ratio
+1.20D+0.50Lr+1.60L+1.60H			17.88	-47.59	603.70					0.000			0.079
+1.20D+1.60L+0.50S+1.60H			17.88	-47.59	603.70					0.000			0.079
+1.20D+1.60Lr+0.50L			17.88	39.11	603.70					0.000			0.065
+1.20D+1.60Lr+0.50W			17.88	31.33	603.70					0.000			0.052
+1.20D+0.50L+1.60S			17.88	39.11	603.70					0.000			0.065
+1.20D+1.60S+0.50W			17.88	31.33	603.70					0.000			0.052
+1.20D+0.50Lr+0.50L+W			17.88	39.11	603.70					0.000			0.065
+1.20D+0.50L+0.50S+W			17.88	39.11	603.70					0.000			0.065
+1.20D+0.50L+0.20S+E			17.88	39.11	603.70					0.000			0.065
+0.90D+W+0.90H			17.88	-35.88	603.70					0.000			0.059
+0.90D+E+0.90H			17.88	-35.88	603.70					0.000			0.059

Maximum Reactions - Unfactored

Note: Only non-zero reactions are listed.

Load Combination	Reaction along X-X Axis @ Base	Reaction along X-X Axis @ Top	Reaction along Y-Y Axis @ Base	Reaction along Y-Y Axis @ Top	Axial Reaction @ Base
D Only	k		k		26.112 k
L Only	k		k		15.560 k
D+L	k		k		41.672 k
H Only	k		k		61.600 k

Sketches

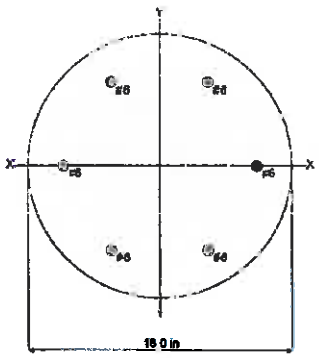

SeaTech Inc.
Design Build Contractors
820 Crane Boulevard
Sugarloaf Key, Florida 33042
305-872-0885
7652 Navarre Pkwy., Suite 7
Navarre, Florida 32566
850-939-3959

JOB
SHEET NO. OF
CALCULATED BY DATE
CHECKED BY DATE
SCALE

AUGER PILE LOAD CALCULATIONS

AUGER PILE B, SIDE PILES $a = 78\,SF$

D: (156 SF)(15 PSF$_R$ + 15 PSF$_{F_2}$) = 4680#
D: (78 SF)(120.8 PSF$_{F_1}$) = 9422#
L: (78 SF)(100 PSF$_{F_1}$) = 7800#
L: (156 SF)(125 PSF$_{F_1}$) = 19,500#
L: (156 SF)(20 PSF$_R$) = 3120#
L: (156 SF)(46.7 PSF$_W$) = 7285#
D: (15.25 LF)(120.8 PLF) = 1842#
D: (8.58 LF)(1529+150)$_{VALUE}$ = 14,406#

H: (78 SF)(395 PSF) = 30,810#

Perez Engineering & Development, In
1010 Kennedy Drive, Suite 201
Key West, FL
33040
305-293-9440 (Office)
305-296-0243 (Fax)

Project Title: Key West Bight Building
Engineer: Paul R. Semmes, PE Project ID: 11-217
Project Descr: Flood-Proof Foundation & 1st Floor, Supported on Auger Piles, Wood-Framed 2nd Floor & Roof Structur

Printed: 3 OCT 2013 6:30AM

Concrete Column

File = C:\Users\paul\DOCUME~1\ENERCA~1\KEYWES~1.EC6
ENERCALC, INC. 1983-2013, Build 6.13.8.31, Ver.6.13.8.31
Licensee : FLORIDA BUILDING CONSULTANTS INC.

[redacted] : KW-06003893
Description : Auger Piles - 8 (Sides)

Code References

Calculations per
Load Combinations Used : ASCE 7-10

[redacted]

f'c : Concrete 28 day strength	=	4.0 ksi
E =	=	3,122.0 ksi
Density	=	145.0 pcf
β	=	0.850
fy - Main Rebar	=	60.0 ksi
E - Main Rebar	=	29,000.0 ksi
Allow. Reinforcing Limits		*ASTM A615 Bars Used*
Min. Reinf.	=	1.0 %
Max. Reinf.	=	8.0 %

Load Combination : ASCE 7-10

Overall Column Height = 18.0 ft
End Fixity Top Fixed, Bottom Fixed
Brace condition for deflection (buckling) along columns :
X-X (width) axis :
Fully braced against buckling along X-X Axis
Y-Y (depth) axis :
Fully braced against buckling along Y-Y Axis

Column Cross Section

Column Dimensions : 18.0in Diameter, Column Edge to Rebar Edge Cover = 2.0in

Column Reinforcing : 6.0 - #6 bars

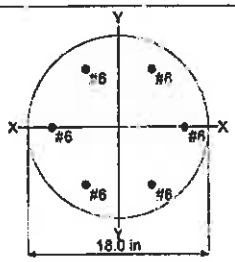

Applied Loads

Entered loads are factored per load combinations specified by user.

Column self weight included : 4,612.25 lbs * Dead Load Factor
AXIAL LOADS . . .
Building: Axial Load at 18.0 ft above base, D = 30.350, LR = 3.120, L = 27.30, W = 7.290, H = -30.80 k

DESIGN SUMMARY

Load Combination +1.20D+0.50Lr+0.50L+W
Location of max.above base 17.879 ft

Maximum Stress Ratio 0.107 : 1
Ratio = (Pu^2+Mu^2)^.5 / (PhiPn^2+PhiMn^2)^.5

Pu =	64.455 k	φ * Pn =	603.70 k
Mu-x =	0.0 k-ft	φ * Mn-x =	0.0 k-ft
Mu-y =	0.0 k-ft	φ * Mn-y =	0.0 k-ft
Mu Angle =	0.0 deg		
Mu at Angle =	0.0 k-ft	φMn at Angle =	0.0 k-ft

Pn & Mn values located at Pu-Mu vector intersection with capacity curve

Column Capacities . . .

Pnmax : Nominal Max. Compressive Axial Capacity	1,014.62 k
Pnmin : Nominal Min. Tension Axial Capacity	-158.40 k
φ Pn, max : Usable Compressive Axial Capacity	603.70 k
φ Pn, min : Usable Tension Axial Capacity	-110.880 k

Maximum SERVICE Load Reactions . .

Top along Y-Y	0.0 k	Bottom along Y-Y	0.0 k
Top along X-X	0.0 k	Bottom along X-X	0.0 k

Maximum SERVICE Load Deflections . . .

Along Y-Y 0.0 in at 0.0 ft above base
for load combination :
Along X-X 0.0in at 0.0 ft above base
for load combination :

General Section Information . φ = 0.70 β = 0.850 θ = 0.850
ρ : % Reinforcing 1.037 % Rebar % Ok
Reinforcing Area 2.640 in^2
Concrete Area 254.469 in^2

Governing Load Combination Results

Governing Factored Load Combination	Moment Source X-X	Moment Source Y-Y	Dist from base ft	Axial Load k Pu	φ * Pn	δx	δx * Mux	δy	δy * Muy	Bending Analysis k-ft Alpha (deg)	δ Mu	φ Mn	Utilization Ratio
+1.40D			17.88	48.95	603.70					0.000			0.081

Perez Engineering & Development, In
1010 Kennedy Drive, Suite 201
Key West, FL
33040
305-293-9440 (Office)
305-296-0243 (Fax)

Project Title: Key West Bight Building
Engineer: Paul R. Semmes, PE Project ID: 11-217
Project Descr: Flood-Proof Foundation & 1st Floor, Supported on Auger Piles, Wood-Framed 2nd Floor & Roof Structur

Printed: 3 OCT 2013, 8:20AM

Concrete Column

File = C:\Users\paul\DOCUME~1\ENERCA~1\KEYWES~1.EC6
ENERCALC, INC. 1983-2013, Build:6.13.8.31, Ver:6.13.8.31

Lic. # : KW-06003893 Licensee : FLORIDA BUILDING CONSULTANTS INC

Description : Auger Piles - 8 (Sides)

Governing Load Combination Results

Governing Factored Load Combination	Moment Source X-X	Moment Source Y-Y	Dist. from base ft	Axial Load Pu k	φ * Pn	δx	δx * Mux	δy	δy * Muy	Bending Analysis Alpha (deg)	k-ft δ Mu	φ Mn	Utilization Ratio
+1.20D+0.50Lr+1.60L+1.60H			17.88	37.91	603.70					0.000			0.063
+1.20D+1.60L+0.50S+1.60H			17.88	36.35	603.70					0.000			0.060
+1.20D+1.60Lr+0.50L			17.88	60.60	603.70					0.000			0.100
+1.20D+1.60Lr+0.50W			17.88	50.59	603.70					0.000			0.084
+1.20D+0.50L+1.60S			17.88	55.60	603.70					0.000			0.092
+1.20D+1.60S+0.50W			17.88	45.60	603.70					0.000			0.076
+1.20D+0.50Lr+0.50L+W			17.88	64.45	603.70					0.000			0.107
+1.20D+0.50L+0.50S+W			17.88	62.89	603.70					0.000			0.104
+1.20D+0.50L+0.20S+E			17.88	55.60	603.70					0.000			0.092
+0.90D+W+0.90H			17.88	11.04	603.70					0.000			0.018
+0.90D+E+0.90H			17.88	3.75	603.70					0.000			0.006

Maximum Reactions - Unfactored

Note: Only non-zero reactions are listed.

Load Combination	Reaction along X-X Axis @ Base	Reaction along X-X Axis @ Top	Reaction along Y-Y Axis @ Base	Reaction along Y-Y Axis @ Top	Axial Reaction @ Base
D Only	k		k		34.952 k
L Only	k		k		27.300 k
Lr Only	k		k		3.120 k
L+Lr	k		k		30.420 k
W Only	k		k		7.290 k
D+Lr	k		k		38.082 k
D+L	k		k		62.252 k
D+L+Lr	k		k		65.382 k
D+W	k		k		42.252 k
D+L+W	k		k		69.552 k
D+Lr+W	k		k		45.372 k
H Only	k		k		30.800 k

Sketches

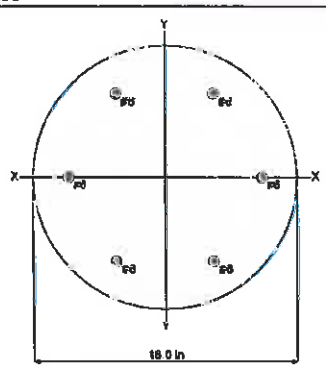

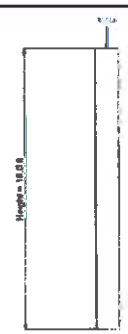

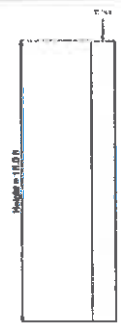

SeaTech inc.
Design Build Contractors
820 Crane Boulevard
Sugarloaf Key, Florida 33042
305-872-0996
7502 Navarre Pkwy. Suite 7
Navarre, Florida 32566
850-939-3959

JOB
SHEET NO OF
CALCULATED BY DATE
CHECKED BY DATE
SCALE

AUGER PILE LOAD CALCULATIONS

AUGER PILE B, END PILES a: 78 SF

D: (78 SF)(120.8 PSF FT) = 9422#
L: (78 SF)(100 PSF) = 7800#
D: (15.29 LF)(120.8 PLF)GB = 1842#
D: (8.58 LF)(1529+150 PLF)WALLS = 14,406#

H: (78 SF)(395 PSF) = 30,810#

Perez Engineering & Development, In
1010 Kennedy Drive, Suite 201
Key West, FL
33040
305-293-9440 (Office)
305-296-0243 (Fax)

Project Title: Key West Bight Building
Engineer: Paul R. Semmes, PE Project ID: 11-217
Project Descr: Flood-Proof Foundation & 1st Floor, Supported on Auger Piles, Wood-Framed 2nd Floor & Roof Structur

Printed: 3 OCT 2013, 8:30PM
File = C:\Users\paul\DOCUME~1\ENERCA~1\KEYWES~1.EC6
ENERCALC, INC. 1983-2013, Build 6.13.8.31, Ver.6.13.8.31
Licensee : FLORIDA BUILDING CONSULTANTS INC.

Concrete Column

Lic. # : KW-06003893

Description : Auger Piles - B (Ends)

Code References

Calculations per
Load Combinations Used : ASCE 7-10

f'c : Concrete 28 day strength	=	4.0 ksi
E =	=	3,122.0 ksi
Density	=	145.0 pcf
β	=	0.850
fy - Main Rebar	=	60.0 ksi
E - Main Rebar	=	29,000.0 ksi
Allow. Reinforcing Limits		ASTM A615 Bars Used
Min. Reinf.	=	1.0 %
Max. Reinf.	=	8.0 %

Load Combination : ASCE 7-10

Overall Column Height = 18.0 ft
End Fixity Top Fixed, Bottom Fixed
Brace condition for deflection (buckling) along columns :
X-X (width) axis :
Fully braced against buckling along X-X Axis
Y-Y (depth) axis :
Fully braced against buckling along Y-Y Axis

Column Cross Section

Column Dimensions : 18.0in Diameter, Column Edge to Rebar Edge
Cover = 2.0in

Column Reinforcing : 6.0 - #6 bars

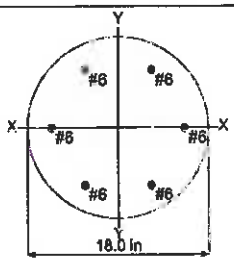

Applied Loads

Entered loads are factored per load combinations specified by user.

Column self weight included : 4,612.25 lbs * Dead Load Factor
AXIAL LOADS . . .
Building: Axial Load at 18.0 ft above base, D = 25.670, L = 7.80, H = -30.80 k

DESIGN SUMMARY

Load Combination +1.40D
Location of max.above base 17.879 ft

Maximum Stress Ratio 0.070 : 1
Ratio = (Pu^2+Mu^2)^.5 / (PhiPn^2+PhiMn^2)^.5

Pu =	42.395 k	φ * Pn =	603.70 k
Mu-x =	0.0 k-ft	φ * Mn-x =	0.0 k-ft
Mu-y =	0.0 k-ft	φ * Mn-y =	0.0 k-ft
Mu Angle =	0.0 deg		
Mu at Angle =	0.0 k-ft	φMn at Angle =	0.0 k-ft

Pn & Mn values located at Pu-Mu vector intersection with capacity curve

Column Capacities . . .

Pnmax : Nominal Max. Compressive Axial Capacity	1,014.62 k
Pnmin : Nominal Min. Tension Axial Capacity	-158.40 k
φ Pn, max : Usable Compressive Axial Capacity	603.70 k
φ Pn, min : Usable Tension Axial Capacity	-110.880 k

Maximum SERVICE Load Reactions . .

Top along Y-Y	0.0 k	Bottom along Y-Y	0.0 k
Top along X-X	0.0 k	Bottom along X-X	0.0 k

Maximum SERVICE Load Deflections . . .

Along Y-Y 0.0 in at 0.0 ft above base
for load combination :

Along X-X 0.0 in at 0.0 ft above base
for load combination :

General Section Information . φ = 0.70 β = 0.850 θ = 0.850
ρ : % Reinforcing 1.037 % Rebar % Ok
Reinforcing Area 2.640 in^2
Concrete Area 254.469 in^2

Governing Load Combination Results

Governing Factored Load Combination	Moment Source X-X	Moment Source Y-Y	Dist. from base ft	Axial Load k Pu	φ * Pn	δx	δx * Mux	δy	δy * Muy	Bending Analysis k-ft Alpha (deg)	δ Mu	φ Mn	Utilization Ratio
+1.40D			17.88	42.40	603.70					0.000			0.070

Perez Engineering & Development, In
1010 Kennedy Drive, Suite 201
Key West, FL
33040
305-293-9440 (Office)
305-296-0243 (Fax)

Project Title: Key West Bight Building
Engineer: Paul R. Semmes, PE Project ID: 11-217
Project Descr: Flood-Proof Foundation & 1st Floor, Supported on Auger Piles. Wood-Framed 2nd Floor & Roof Structur

Printed: 3 OCT 2013, 8:30AM
File = C:\Users\paul\DOCUME~1\ENERCA~1\KEYWES~1.EC6
ENERCALC, INC. 1983-2013, Build: 13.8.31, Ver: 6.13.8.31

Concrete Column

Lic. # : KW06003893 Licensee : FLORIDA BUILDING CONSULTANTS INC.

Description : Auger Piles - B (Ends)

Governing Load Combination Results

Governing Factored Load Combination	Moment Source X-X	Moment Source Y-Y	Dist. from base ft	Axial Load k Pu	φ * Pn	δx	δx * Mux	δy	δy * Muy	Bending Analysis k-ft Alpha (deg)	δ Mu	φ Mn	Utilization Ratio
+1.20D+0.50Lr+1.60L+1.60H			17.88	-5.72	603.70					0.000			0.009
+1.20D+1.60L+0.50S+1.60H			17.88	-5.72	603.70					0.000			0.009
+1.20D+1.60Lr+0.50L			17.88	40.24	603.70					0.000			0.067
+1.20D+1.60Lr+0.50W			17.88	36.34	603.70					0.000			0.060
+1.20D+0.50L+1.60S			17.88	40.24	603.70					0.000			0.067
+1.20D+1.60S+0.50W			17.88	36.34	603.70					0.000			0.060
+1.20D+0.50Lr+0.50L+W			17.88	40.24	603.70					0.000			0.067
+1.20D+0.50L+0.50S+W			17.88	40.24	603.70					0.000			0.067
+1.20D+0.50L+0.20S+E			17.88	40.24	603.70					0.000			0.067
+0.90D+W+0.90H			17.88	-4.41	603.70					0.000			0.007
+0.90D+E+0.90H			17.88	-4.41	603.70					0.000			0.007

Maximum Reactions - Unfactored

Note: Only non-zero reactions are listed.

Load Combination	Reaction along X-X Axis @ Base	Reaction along X-X Axis @ Top	Reaction along Y-Y Axis @ Base	Reaction along Y-Y Axis @ Top	Axial Reaction @ Base
D Only	k		k	k	30.282 k
L Only	k		k	k	7.800 k
D+L	k		k	k	38.082 k
H Only	k		k	k	30.800 k

Sketches

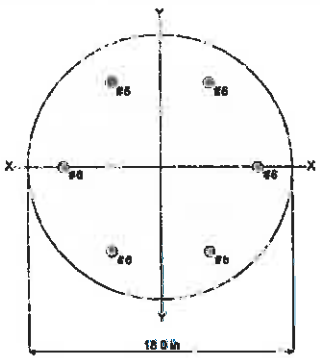

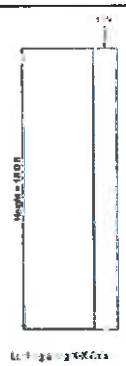

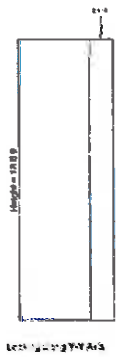

SeaTech inc.
Design Build Contractors
890 Crane Boulevard
Summerland Key, Florida 33042
305-872-0958
7552 Navarre Pkwy., Suite 7
Navarre, Florida 32566
850-939-3059

JOB
SHEET NO. OF
CALCULATED BY DATE
CHECKED BY DATE
SCALE

AUGER PILE LOAD CALCULATIONS

AUGER PILE @ CORNER PILES @ 39/78

D: (78 SF)(15 PSF$_R$ + 15 PSF$_{1,2}$) = 2340#
D: (39 SF)(120.8 PSF$_H$) = 4711#
L: (39 SF)(100 PSF$_H$) = 3900#
L: (78 SF)(125 PSF$_{1,2}$) = 9750#
L: (78 SF)(20 PSF$_R$) = 1560#
L: (78 SF)(46.7 PSF$_W$) = 3643#
D: (10.96 LF)(1800 PLF) = 19,726#

H: (39 SF)(395 PSF) = 15,405#

Perez Engineering & Development, In
1010 Kennedy Drive, Suite 201
Key West, FL
33040
305-293-9440 (Office)
305-296-0243 (Fax)

Project Title: Key West Bight Building
Engineer: Paul R. Sammes, PE Project ID: 11-217
Project Descr: Flood-Proof Foundation & 1st Floor, Supported on Auger Piles, Wood-Framed 2nd Floor & Roof Structur

Printed: 3 OCT 2013, 8.31AM
File = C:\Users\paul\DOCUME~1\ENERCA~1\KEYWES~1.EC6
ENERCALC, INC. 1983-2013, Build:6.13.8.31, Ver:6.13.8.31

Concrete Column

Lic. #: KW-06003893 Licensee : FLORIDA BUILDING CONSULTANTS INC.

Description : Auger Piles - C

Code References

Calculations per
Load Combinations Used : ASCE 7-10

f'c : Concrete 28 day strength	=	4.0 ksi
E =	=	3,122.0 ksi
Density	=	145.0 pcf
β	=	0.850
fy - Main Rebar	=	60.0 ksi
E - Main Rebar	=	29,000.0 ksi
Allow. Reinforcing Limits		ASTM A615 Bars Used
Min. Reinf.	=	1.0 %
Max. Reinf.	=	8.0 %

Load Combination : ASCE 7-10

Overall Column Height = 18.0 ft
End Fixity Top Fixed, Bottom Fixed
Brace condition for deflection (buckling) along columns :
X-X (width) axis :
Fully braced against buckling along X-X Axis
Y-Y (depth) axis :
Fully braced against buckling along Y-Y Axis

Column Cross Section

Column Dimensions :18.0in Diameter, Column Edge to Rebar Edge Cover = 2.0in

Column Reinforcing :6.0 - #6 bars

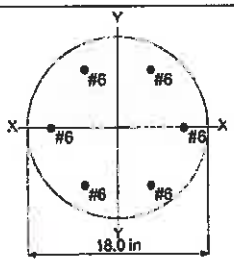

Applied Loads

Entered loads are factored per load combinations specified by user.

Column self weight included : 4,612.25 lbs * Dead Load Factor
AXIAL LOADS . . .
Building: Axial Load at 18.0 ft above base, D = 26.780, LR = 1.560, L = 13.650, W = 3.640, H = -15.410 k

DESIGN SUMMARY

Load Combination +1.20D+0.50Lr+0.50L+W
Location of max.above base 17.879 ft

Maximum Stress Ratio 0.081 : 1
Ratio = (Pu^2+Mu^2)^.5 / (PhiPn^2+PhiMn^2)^.5

Pu =	48.916 k	φ * Pn =	603.70 k
Mu-x =	0.0 k-ft	φ * Mn-x =	0.0 k-ft
Mu-y =	0.0 k-ft	φ * Mn-y =	0.0 k-ft
Mu Angle =	0.0 deg		
Mu at Angle =	0.0 k-ft	φMn at Angle =	0.0 k-ft

Pn & Mn values located at Pu-Mu vector intersection with capacity curve

Column Capacities . . .

Pnmax : Nominal Max. Compressive Axial Capacity	1,014.62 k
Pnmin : Nominal Min. Tension Axial Capacity	-158.40 k
φ Pn, max : Usable Compressive Axial Capacity	603.70 k
φ Pn, min : Usable Tension Axial Capacity	-110.880 k

Maximum SERVICE Load Reactions . .

Top along Y-Y	0.0 k	Bottom along Y-Y	0.0 k
Top along X-X	0.0 k	Bottom along X-X	0.0 k

Maximum SERVICE Load Deflections . . .

Along Y-Y 0.0 in at 0.0 ft above base
for load combination :
Along X-X 0.0 in at 0.0 ft above base
for load combination :

General Section Information . φ = 0.70 β = 0.850 θ = 0.850

ρ : % Reinforcing	1.037 %	Rebar % Ok
Reinforcing Area	2.640 in^2	
Concrete Area	254.469 in^2	

Governing Load Combination Results

Governing Factored Load Combination	Moment Source X-X	Moment Source Y-Y	Dist. from base ft	Axial Load k Pu	φ * Pn	δx	δx * Mux	δy	δy * Muy	Bending Analysis k-ft Alpha (deg)	δ Mu	φ Mn	Utilization Ratio
+1.40D			17.88	43.95	603.70					0.000			0.073

Perez Engineering & Development, In
1010 Kennedy Drive, Suite 201
Key West, FL
33040
305-293-9440 (Office)
305-296-0243 (Fax)

Project Title: Key West Bight Building
Engineer: Paul R. Semmes, PE Project ID: 11-217
Project Descr: Flood-Proof Foundation & 1st Floor, Supported on Auger Piles, Wood-Framed 2nd Floor & Roof Structur

Printed: 3 OCT 2013, 8:31AM
File = C:\Users\paul\DOCUME~1\ENERCA~1\KEYWES~1.EC6
ENERCALC, INC. 1983-2013, Build:6.13.8.31, Ver:6.13.8.31

Concrete Column

File # KW-06003893 Licensee : FLORIDA BUILDING CONSULTANTS INC.

Description : Auger Piles - C

Governing Load Combination Results

Governing Factored Load Combination	Moment Source X-X	Moment Source Y-Y	Dist. from base ft	Axial Load Pu k	φ * Pn	δx	δx * Mux	δy	δy * Muy	Bending Analysis Alpha (deg)	δ Mu k-ft	φ Mn	Utilization Ratio
+1.20D+0.50Lr+1.60L+1.60H			17.88	35.63	603.70					0.000			0.059
+1.20D+1.60L+0.50S+1.60H			17.88	34.85	603.70					0.000			0.058
+1.20D+1.60Lr+0.50L			17.88	46.99	603.70					0.000			0.078
+1.20D+1.60Lr+0.50W			17.88	41.99	603.70					0.000			0.070
+1.20D+0.50L+1.60S			17.88	44.50	603.70					0.000			0.074
+1.20D+1.60S+0.50W			17.88	39.49	603.70					0.000			0.065
+1.20D+0.50Lr+0.50L+W			17.88	48.92	603.70					0.000			0.081
+1.20D+0.50L+0.50S+W			17.88	48.14	603.70					0.000			0.080
+1.20D+0.50L+0.20S+E			17.88	44.50	603.70					0.000			0.074
+0.90D+W+0.90H			17.88	18.02	603.70					0.000			0.030
+0.90D+E+0.90H			17.88	14.38	603.70					0.000			0.024

Maximum Reactions - Unfactored

Note: Only non-zero reactions are listed.

Load Combination	Reaction along X-X Axis @ Base	Reaction along X-X Axis @ Top	Reaction along Y-Y Axis @ Base	Reaction along Y-Y Axis @ Top	Axial Reaction @ Base
D Only	k		k	k	31.392 k
L Only	k		k	k	13.650 k
Lr Only	k		k	k	1.560 k
L+Lr	k		k	k	15.210 k
W Only	k		k	k	3.640 k
D+Lr	k		k	k	32.952 k
D+L	k		k	k	45.042 k
D+L+Lr	k		k	k	46.602 k
D+W	k		k	k	35.032 k
D+L+W	k		k	k	48.682 k
D+Lr+W	k		k	k	36.592 k
H Only	k		k	k	15.410 k

Sketches

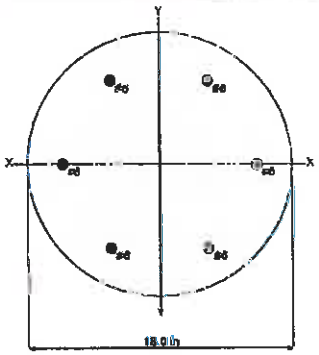

SeaTech Inc.
Design Build Contractors
830 Crane Boulevard
Sugarloaf Key, Florida 33042
305-872-0888
7552 Navarre Pkwy., Suite 7
Navarre, Florida 32566
850-939-3959

JOB
SHEET NO. OF
CALCULATED BY DATE
CHECKED BY DATE
SCALE

AUGER PILE LOAD CALCULATIONS.

ROOF D= 15 PSF
L= 20 PSF

SECOND STORY WALL D= 15 PSF × 10' = 150 PLF

SECOND STORY FLOOR D = 15 PSF
L = 125 PSF

FIRST STORY WALL D = 1529 PLF

FIRST STORY FLOOR D = (10'/12)(145 PCF)
120 PSF
L = 1208 PSF

GRADE BEAMS D = 1208 PLF
(10"/12) × (1') × 145 PCF

4.2 AUGERCAST PILES

Locally, augercast piles (pressure-grouted) are considered the most appropriate type of deep foundation system for the support of the proposed structure. As an added advantage, this system can be constructed with the least amount of noise/vibration while still providing resistance to compression, lateral and uplift forces. Foundations may be constructed after the site preparation recommendations presented in this report have been implemented. The capacity of augercast piles is essentially developed in side shear (skin friction) between the periphery of the grouted pile and the layers of sand or/and limestone through which the piles penetrate. For this site, the augercast piles can be designed for the allowable capacities outlined in **Table A**.

Table A - Recommendation for Augercast Piles

Dia. (Inches)	Pile Length (feet)	Rock Socket (feet)	Allowable Capacity (Tons)			Maximum Lateral Deflection (Inches)
			Compression	Tension	Lateral	
16	18	9	40	29	4	< 1.0

Notes:

1. Rock socket refers to the length of pile in contact with the natural limestone formation below a depth of 9 feet.
2. We are assuming that the structural design of the augercast piles will include appropriate reinforcing to resist uplift and lateral forces as noted herein.
3. Lateral pile analysis runs using the L-pile program are included in the **Appendix**.
4. As per the Florida Building Code (FBC), a compression load test is not required on piles designed to carry loads less than or equal to 40 tons.
5. At a minimum the concrete should have a compressive strength of 3,000 pounds per square inch (psi).
6. The contractor should be prepared for higher than normal grout factors especially within the miscellaneous fill stratum.
7. PSI can work with your structural engineer in order to optimize the pile foundation design. We can provide different pile capacity recommendations and/or analyze a different pile dimension (diameter and length), if required.

A safety factor of 2 against exceeding the ultimate unit skin friction values in the subsurface layers was used in our pile capacity calculations. The pile capacity recommended previously is controlled by stresses developed in the subsurface materials only. Allowable stresses for the selected pile section may impose more stringent restrictions on pile capacity and should be checked by the structural engineer. The structural engineer should determine the minimum compressive strength for the grout in accordance with applicable Building Code requirements.

For an augercast pile supported system (where all piles meet the minimum length/socket noted in **Table A**), the settlement of the structure is anticipated to be one inch or less, with differential settlements not exceeding one half inch. Settlement movement will primarily occur as a result of elastic compression and will take place almost immediately with the application of load.

If the new and existing buildings are to be connected then in order to minimize differential settlement impacts between the two, we recommend that an expansion joint be provided.

U.S. DEPARTMENT OF HOMELAND SECURITY
FEDERAL EMERGENCY MANAGEMENT AGENCY
National Flood Insurance Program

ELEVATION CERTIFICATE

Important: Read the instructions on pages 1–9.

OMB No. 1660-0008
Expiration Date: July 31, 2015

SECTION A – PROPERTY INFORMATION

FOR INSURANCE COMPANY USE
Policy Number
Company NAIC Number

A1. Building Owner's Name City of Key West

A2. Building Street Address (including Apt., Unit, Suite, and/or Bldg. No.) or P.O. Route and Box No.
251 Margaret Street
City Key West State FL ZIP Code 33040

A3. Property Description (Lot and Block Numbers, Tax Parcel Number, Legal Description, etc.)
(Tax Parcel #: 00072082-004501) (PARCEL LYING N'LY OF SQR 20)

A4. Building Use (e.g., Residential, Non-Residential, Addition, Accessory, etc.) Non-Residential

A5. Latitude/Longitude: Lat. 24.5617 N Long. 81.7997 W Horizontal Datum: ☐ NAD 1927 ☒ NAD 1983

A6. Attach at least 2 photographs of the building if the Certificate is being used to obtain flood insurance.

A7. Building Diagram Number 1B

A8. For a building with a crawlspace or enclosure(s):
a) Square footage of crawlspace or enclosure(s) NA sq ft
b) Number of permanent flood openings in the crawlspace or enclosure(s) within 1.0 foot above adjacent grade NA
c) Total net area of flood openings in A8.b NA sq in
d) Engineered flood openings? ☐ Yes ☒ No

A9. For a building with an attached garage:
a) Square footage of attached garage NA sq ft
b) Number of permanent flood openings in the attached garage within 1.0 foot above adjacent grade NA
c) Total net area of flood openings in A9.b NA sq in
d) Engineered flood openings? ☐ Yes ☒ No

SECTION B – FLOOD INSURANCE RATE MAP (FIRM) INFORMATION

B1. NFIP Community Name & Community Number	B2. County Name	B3. State
City of Key West 120168	Monroe	FL

B4. Map/Panel Number	B5. Suffix	B6. FIRM Index Date	B7. FIRM Panel Effective/Revised Date	B8. Flood Zone(s)	B9. Base Flood Elevation(s) (Zone AO, use base flood depth)
12087C1516	K	2/18/05	2/18/05	AE	9

B10. Indicate the source of the Base Flood Elevation (BFE) data or base flood depth entered in Item B9.
☐ FIS Profile ☒ FIRM ☐ Community Determined ☐ Other/Source: _____

B11. Indicate elevation datum used for BFE in Item B9: ☒ NGVD 1929 ☐ NAVD 1988 ☐ Other/Source: _____

B12. Is the building located in a Coastal Barrier Resources System (CBRS) area or Otherwise Protected Area (OPA)? ☐ Yes ☒ No
Designation Date: _____ ☐ CBRS ☐ OPA

SECTION C – BUILDING ELEVATION INFORMATION (SURVEY REQUIRED)

C1. Building elevations are based on: ☐ Construction Drawings* ☐ Building Under Construction* ☒ Finished Construction
*A new Elevation Certificate will be required when construction of the building is complete.

C2. Elevations – Zones A1–A30, AE, AH, A (with BFE), VE, V1–V30, V (with BFE), AR, AR/A, AR/AE, AR/A1–A30, AR/AH, AR/AO. Complete Items C2.a–h below according to the building diagram specified in Item A7. In Puerto Rico only, enter meters.
Benchmark Utilized: BASIC Vertical Datum: 1929
Indicate elevation datum used for the elevations in items a) through h) below. ☒ NGVD 1929 ☐ NAVD 1988 ☐ Other/Source: _____
Datum used for building elevations must be the same as that used for the BFE.

		Check the measurement used.	
a) Top of bottom floor (including basement, crawlspace, or enclosure floor)	4.4	☒ feet	☐ meters
b) Top of the next higher floor	15.9	☒ feet	☐ meters
c) Bottom of the lowest horizontal structural member (V Zones only)	NA	☐ feet	☐ meters
d) Attached garage (top of slab)	NA	☐ feet	☐ meters
e) Lowest elevation of machinery or equipment servicing the building (Describe type of equipment and location in Comments)	9.2	☒ feet	☐ meters
f) Lowest adjacent (finished) grade next to building (LAG)	3.9	☒ feet	☐ meters
g) Highest adjacent (finished) grade next to building (HAG)	4.3	☒ feet	☐ meters
h) Lowest adjacent grade at lowest elevation of deck or stairs, including structural support	3.9	☒ feet	☐ meters

SECTION D – SURVEYOR, ENGINEER, OR ARCHITECT CERTIFICATION

This certification is to be signed and sealed by a land surveyor, engineer, or architect authorized by law to certify elevation information. *I certify that the information on this Certificate represents my best efforts to interpret the data available. I understand that any false statement may be punishable by fine or imprisonment under 18 U.S. Code, Section 1001.*

☒ Check here if comments are provided on back of form.
☒ Check here if attachments.

Were latitude and longitude in Section A provided by a licensed land surveyor? ☒ Yes ☐ No

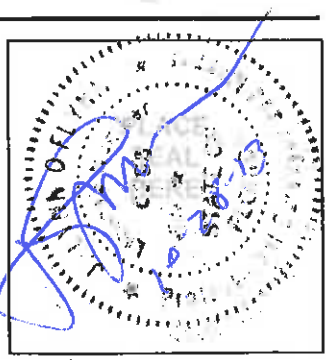

Certifier's Name J. Lynn O'Flynn		License Number 6298
Title P.S.M.	Company Name J. Lynn O'Flynn, Inc	
Address 3430 Duck Avenue	City Key West	State FL ZIP Code 33040
Signature	Date 10/28/13	Telephone (305) 296-7422

IMPORTANT: In these spaces, copy the corresponding information from Section A.	FOR INSURANCE COMPANY USE
Building Street Address (including Apt., Unit, Suite, and/or Bldg. No.) or P.O. Route and Box No. 251 Margaret Street	Policy Number
City Key West State FL ZIP Code 33040	Company NAIC Number

SECTION D – SURVEYOR, ENGINEER, OR ARCHITECT CERTIFICATION (CONTINUED)

Copy both sides of this Elevation Certificate for (1) community official, (2) insurance agent/company, and (3) building owner.

Comments C2. e) -- Air Conditioner Unit

Signature Date 10/28/13

SECTION E – BUILDING ELEVATION INFORMATION (SURVEY NOT REQUIRED) FOR ZONE AO AND ZONE A (WITHOUT BFE)

For Zones AO and A (without BFE), complete Items E1–E5. If the Certificate is intended to support a LOMA or LOMR-F request, complete Sections A, B, and C. For Items E1–E4, use natural grade, if available. Check the measurement used. In Puerto Rico only, enter meters.

E1. Provide elevation information for the following and check the appropriate boxes to show whether the elevation is above or below the highest adjacent grade (HAG) and the lowest adjacent grade (LAG).
a) Top of bottom floor (including basement, crawlspace, or enclosure) is _____._____ ☐ feet ☐ meters ☐ above or ☐ below the HAG.
b) Top of bottom floor (including basement, crawlspace, or enclosure) is _____._____ ☐ feet ☐ meters ☐ above or ☐ below the LAG.

E2. For Building Diagrams 6–9 with permanent flood openings provided in Section A Items 8 and/or 9 (see pages 8–9 of Instructions), the next higher floor (elevation C2.b in the diagrams) of the building is _____._____ ☐ feet ☐ meters ☐ above or ☐ below the HAG.

E3. Attached garage (top of slab) is _____._____ ☐ feet ☐ meters ☐ above or ☐ below the HAG.

E4. Top of platform of machinery and/or equipment servicing the building is _____._____ ☐ feet ☐ meters ☐ above or ☐ below the HAG.

E5. Zone AO only: If no flood depth number is available, is the top of the bottom floor elevated in accordance with the community's floodplain management ordinance? ☐ Yes ☐ No ☐ Unknown. The local official must certify this information in Section G.

SECTION F – PROPERTY OWNER (OR OWNER'S REPRESENTATIVE) CERTIFICATION

The property owner or owner's authorized representative who completes Sections A, B, and E for Zone A (without a FEMA-issued or community-issued BFE) or Zone AO must sign here. The statements in Sections A, B, and E are correct to the best of my knowledge.

Property Owner's or Owner's Authorized Representative's Name

Address City State ZIP Code

Signature Date Telephone

Comments

☐ Check here if attachments.

SECTION G – COMMUNITY INFORMATION (OPTIONAL)

The local official who is authorized by law or ordinance to administer the community's floodplain management ordinance can complete Sections A, B, C (or E), and G of this Elevation Certificate. Complete the applicable item(s) and sign below. Check the measurement used in Items G8–G10. In Puerto Rico only, enter meters.

G1. ☐ The information in Section C was taken from other documentation that has been signed and sealed by a licensed surveyor, engineer, or architect who is authorized by law to certify elevation information. (Indicate the source and date of the elevation data in the Comments area below.)

G2. ☐ A community official completed Section E for a building located in Zone A (without a FEMA-issued or community-issued BFE) or Zone AO.

G3. ☐ The following information (Items G4–G10) is provided for community floodplain management purposes.

G4. Permit Number	G5. Date Permit Issued	G6. Date Certificate Of Compliance/Occupancy Issued

G7. This permit has been issued for: ☐ New Construction ☐ Substantial Improvement

G8. Elevation of as-built lowest floor (including basement) of the building: _____._____ ☐ feet ☐ meters Datum _____

G9. BFE or (in Zone AO) depth of flooding at the building site: _____._____ ☐ feet ☐ meters Datum _____

G10. Community's design flood elevation: _____._____ ☐ feet ☐ meters Datum _____

Local Official's Name Title

Community Name Telephone

Signature Date

Comments

☐ Check here if attachments.

Building Photographs

See Instructions for Item A6.

IMPORTANT: In these spaces, copy the corresponding information from Section A.

			FOR INSURANCE COMPANY USE
Building Street Address (including Apt., Unit, Suite, and/or Bldg. No.) or P.O. Route and Box No. 251 Margaret Street			Policy Number
City Key West	State FL	ZIP Code 33040	Company NAIC Number

If using the Elevation Certificate to obtain NFIP flood insurance, affix at least 2 building photographs below according to the instructions for Item A6. Identify all photographs with date taken; "Front View" and "Rear View"; and, if required, "Right Side View" and "Left Side View." When applicable, photographs must show the foundation with representative examples of the flood openings or vents, as indicated in Section A8. If submitting more photographs than will fit on this page, use the Continuation Page.

Front & Side View **10/28/13**

Rear View & Equipment **10/28/13**

Savannah Flood Protection

SITE SPECIFIC DRAWINGS FOR KEY WEST BIGHT PROJECT

Drawing Index

Cover Sheet

General Notes..... "N" Drawing N1

Elevation/Plan view..... "A" Drawing A1

Details..... "D" Drawing D1

SAVANNAH FLOOD PROTECTION
3567 91st Street North, Suite 4
Lake Park, Florida 33403
561.656.2556
561.656.2599
GKennedy@savannahtrims com
BDudash@savannahtrims.com

Savannah Trims,Inc.
3567 91st N
Lake Park FL 33403

© Copyright 2010. Savannah Trims, Inc.

RBC ENGINEERING

KEY WEST BIGHT
COVER PAGE

COVER

DRAWN BY GSM
SCALE ACAD
DATE 04/24/13

APPR.
REV REV 2
SHEET 1 OF 5

GENERAL NOTES:

1. The structural design of these Removable Flood Shields is generic and has been designed for hydrostatic hydrodynamic and impact debris flood loads with water pressures corresponding to 1 foot above maximum water height and flow speed of 5 ft/sec. up to 8 ft/sec. in order to certify minimum required flood elevation to top of Flood Shields.

2. It shall be determined, on a job by job basis, the required Shield height and flow speed for the design of Removable Flood Shields, based on FEMA's criteria (See Note #3) as well as per ASCE 24-98 Standard. Installation and construction of these Flood Shields for use within flood hazard areas shall be in accordance with the American Society of Civil Engineers Flood Resistant Design and Construction Standard SEI/ASCE 7-05.

3. Design criteria has been based on FEMA flood proofing non-residential structures manual FEMA 102, and FEMA Technical Bulletin 3-93.

4. Requirements for aluminum flood barriers, terminology, tolerances, standards of performance and workmanship are those specified as Type 2 closures in Chapter 7, Sec. 701.2.1 of the US Army Corps of Engineers 'Flood Proofing Regulations'. These Type 2 Flood Closures/Barriers will allow 'Slight Seepage' during hydrodynamic and hydrostatic pressure flood conditions. This should be addressed by the design professionals and usage of sump or bilge type pumps.

5. Shields are only installed on a "X" or "AE" Flood Zone. This condition shall be verified and this engineer shall be notified if not compiled with.

6. Flood Shields shall not be installed within areas where ice flows or ice jams occur.

7. Flood Shield manufacturer to install and use gaskets and approved sealants following all the recommendations and specifications of the manufacturers respectively.

8. Existing slabs and walls adjacent to opening where Flood Shield is to be installed shall be given a surface treatment by means of water proof sealer before flood shield is installed. ***Stucco and Concrete Surfaces must be smooth, square, plumb and level.***

9. Existing slabs and walls adjacent to openings where Flood Shields are installed shall be structurally designed by engineer of record, to sustain the same hydrostatic, hydrodynamic and impact pressures that correspond to maximum water elevation above finished floor at top of Shield, based on criteria mentioned in Note #3.

10. Drop-in and calk-in anchors embedded into concrete for removable diagonal brace installation, as well as at bottom angle of Shields shall be covered with a nylon cap or similar device to protect their inside hold from dust, so that machine screws can easily be installed at time of flood warning.

11. Separation of Shield to window/door shall be measured from back of Shield to window/door including any knob, handle, or protruding device, and shall be 2" minimum.

12. All aluminum extrusions to be 6063-T6 alloy, except that 2"x4"x1/4" and top tubes shall be 6061-T6 alloy.

13. All sheet metal screws shall be as manufactured by ITW/Buildex (or equal) "TEK Screws", and to be made of stainless st.

14. All bolts to be galvanized steel ASTM A-307 designation or 304 Series Stainless Steel.

15. All aluminum skin to be 5052-H32 or 3004-H34 alloy.

16. Panel Assembly Screws shall be of water resistant design (rubber washers). All silicone sealants to be Dow 995 or equal type.

17. All gaskets installed shall be ½" thick dense 20 durometer rubber.

18. All welding to conform to the American Welding Society AWS D1.2 1998 Regulations. Use certified welders. Use ER-5356 Electrodes.

19. These drawings are generic in nature but may (if required) be supported by application specific engineering. The supporting engineering may dictate some changes which will be reflected on the final "application specific" drawings, for a specific project.

20. Surfaces against which the sealing gasket presses must be built "paper-smooth" to prevent excessive water intrusion, beyond that allowed by requirements. All surfaces must be plumb, square and level.

21. Responsibility for filing the building "Flood Proofing Certificate" is the responsibility of the owner's architect and/or engineer and not of Savannah Flood Protection, Inc.

22. Base flood elevation for this location is _____.

23. Finish grade at this location is _____' and the flood panel installed height are as per attached details.

© Copyright 2010, Savannah Trims, Inc.

Savannah Trims, Inc.
3567 91st N.
Lake Park FL.33403

RBC
ENGINEERING

KEY WEST BIGHT
NOTES PAGE

N1

DRAWN BY GSM
SCALE ACAD
DATE 04/24/13

APPR
REV REV 2
SHEET 2 OF 5

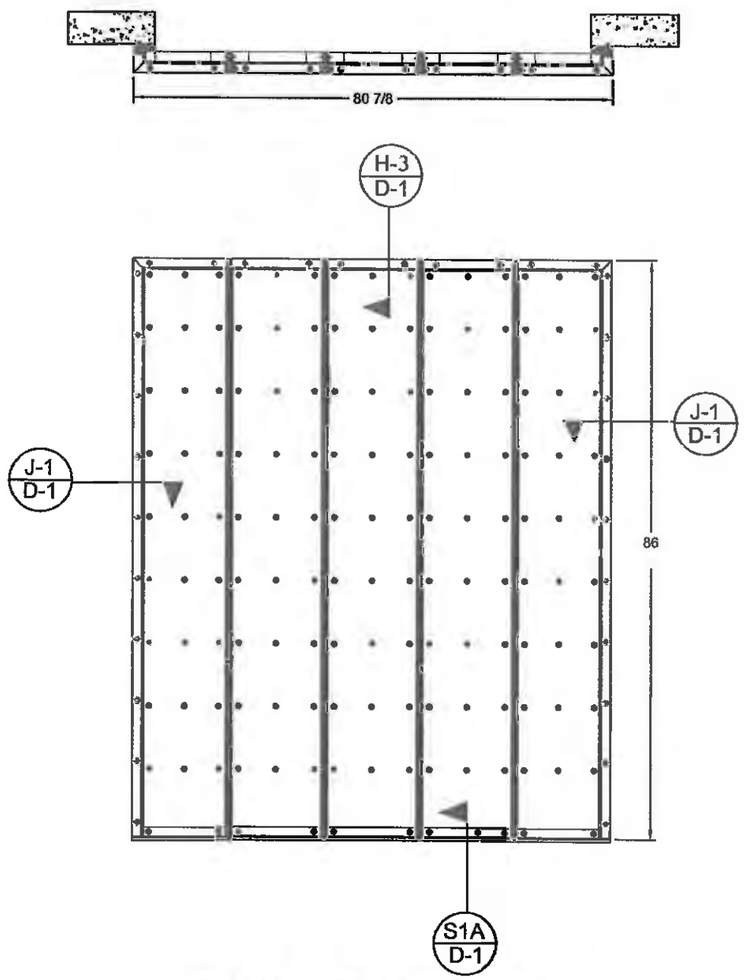

DOOR 101-A

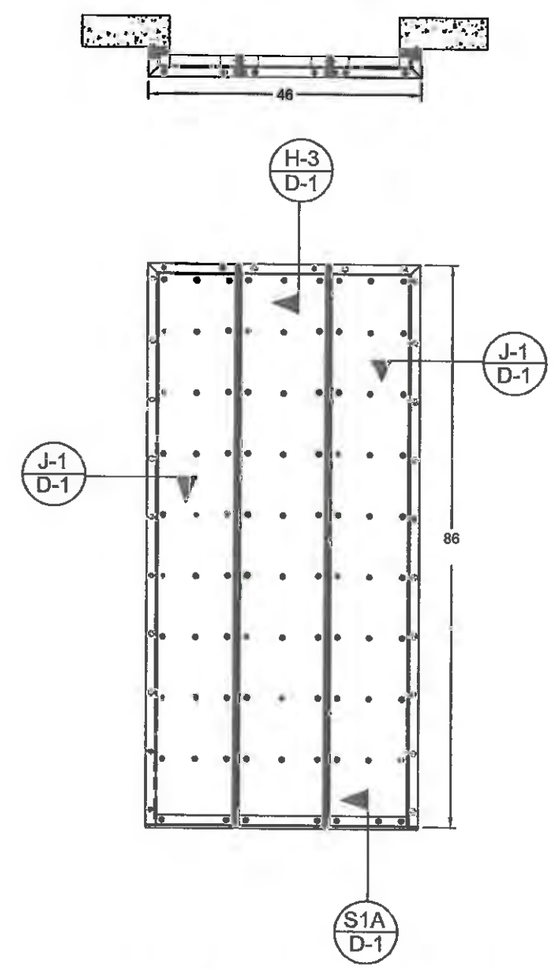

DOOR 101-B

Savannah Trims, Inc.
3567 91st N.
Lake Park FL.33403

RBC
ENGINEERING

KEY WEST BIGHT
ELEVATIONS

A1

DRAWN BY GSM
SCALE ACAD
DATE 04/24/13

APPR
REV REV 2
SHEET 3 OF 5

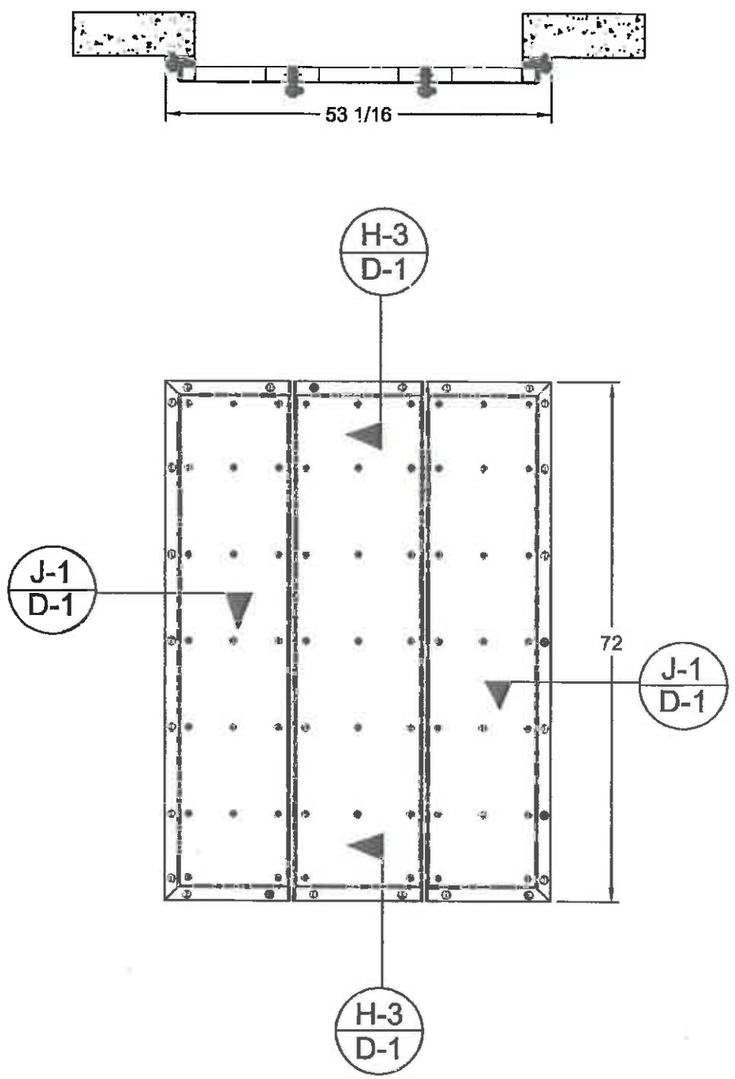

WINDOW 101-B
WINDOW 101-C

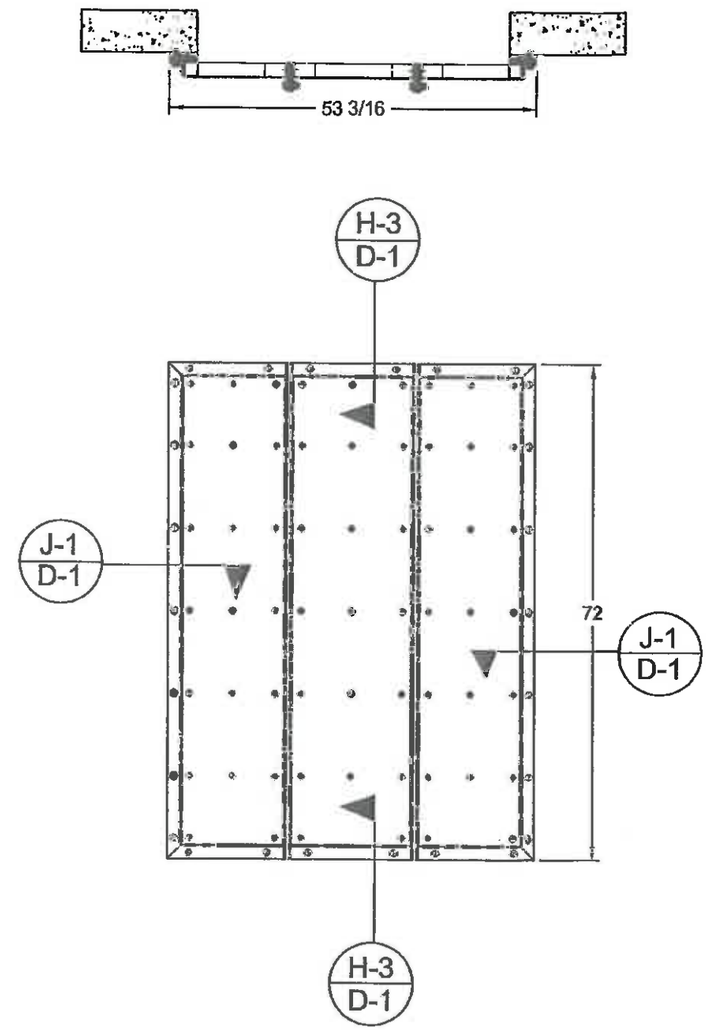

WINDOW 101-A

Savannah Trims, Inc.
3567 91st N.
Lake Park FL 33403

RBC ENGINEERING

KEY WEST BIGHT
ELEVATIONS

A1

DRAWN BY GSM
SCALE ACAD
DATE 04/24/13

APPR.
REV REV 2
SHEET 4 OF 5

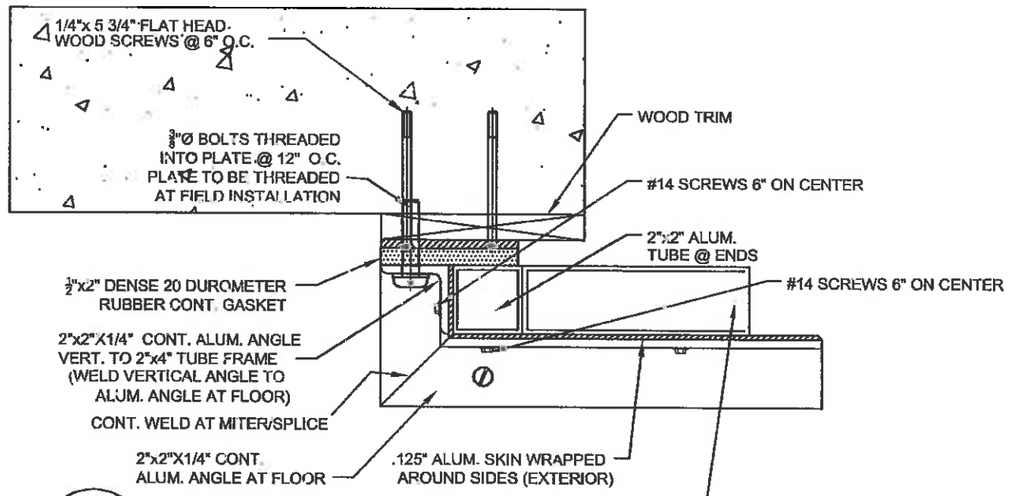

J-1 **STANDARD JAMB**

NOT TO SCALE

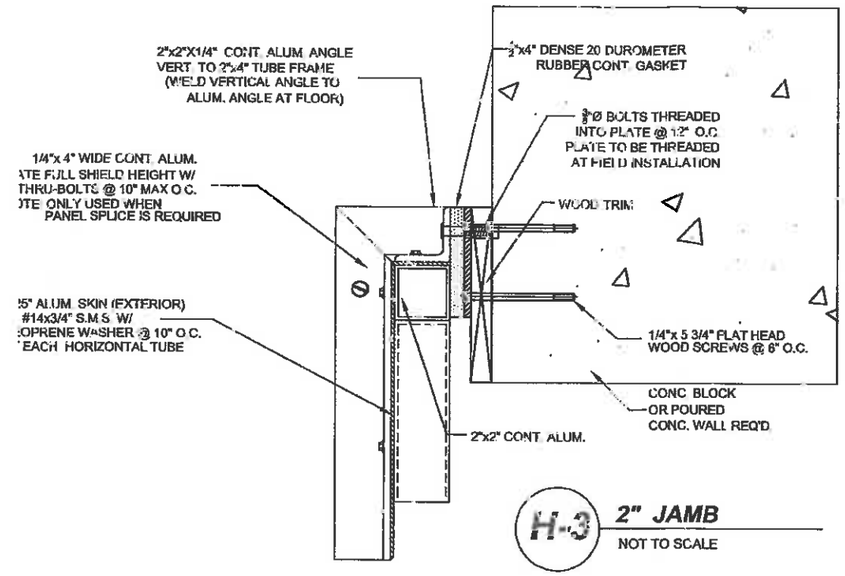

H-3 **2" JAMB**

NOT TO SCALE

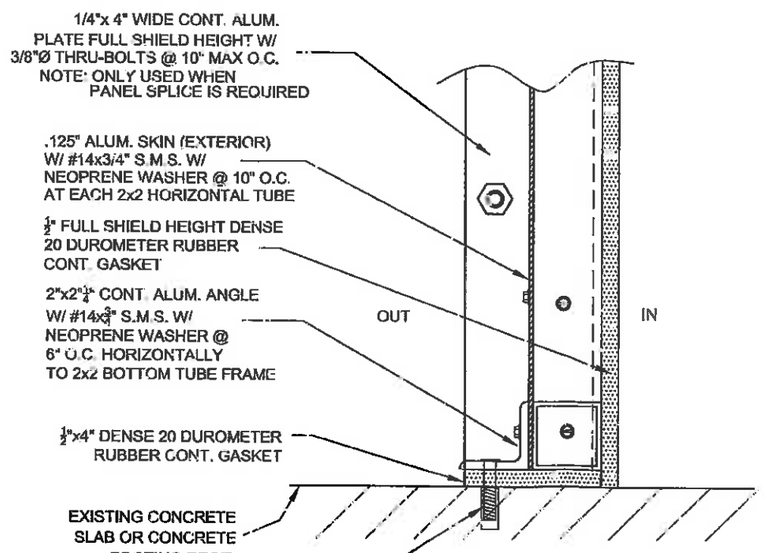

S1A **SILL STANDARD**

SCALE: N.T.S.

Savannah Trims, Inc.
3567 91st N.
Lake Park FL.33403

RBC ENGINEERING

KEY WEST BIGHT

ELEVATIONS

D1

DRAWN BY GSM

SCALE ACAD

DATE 04/24/13

APPR.

REV REV 2

SHEET 5 OF 5