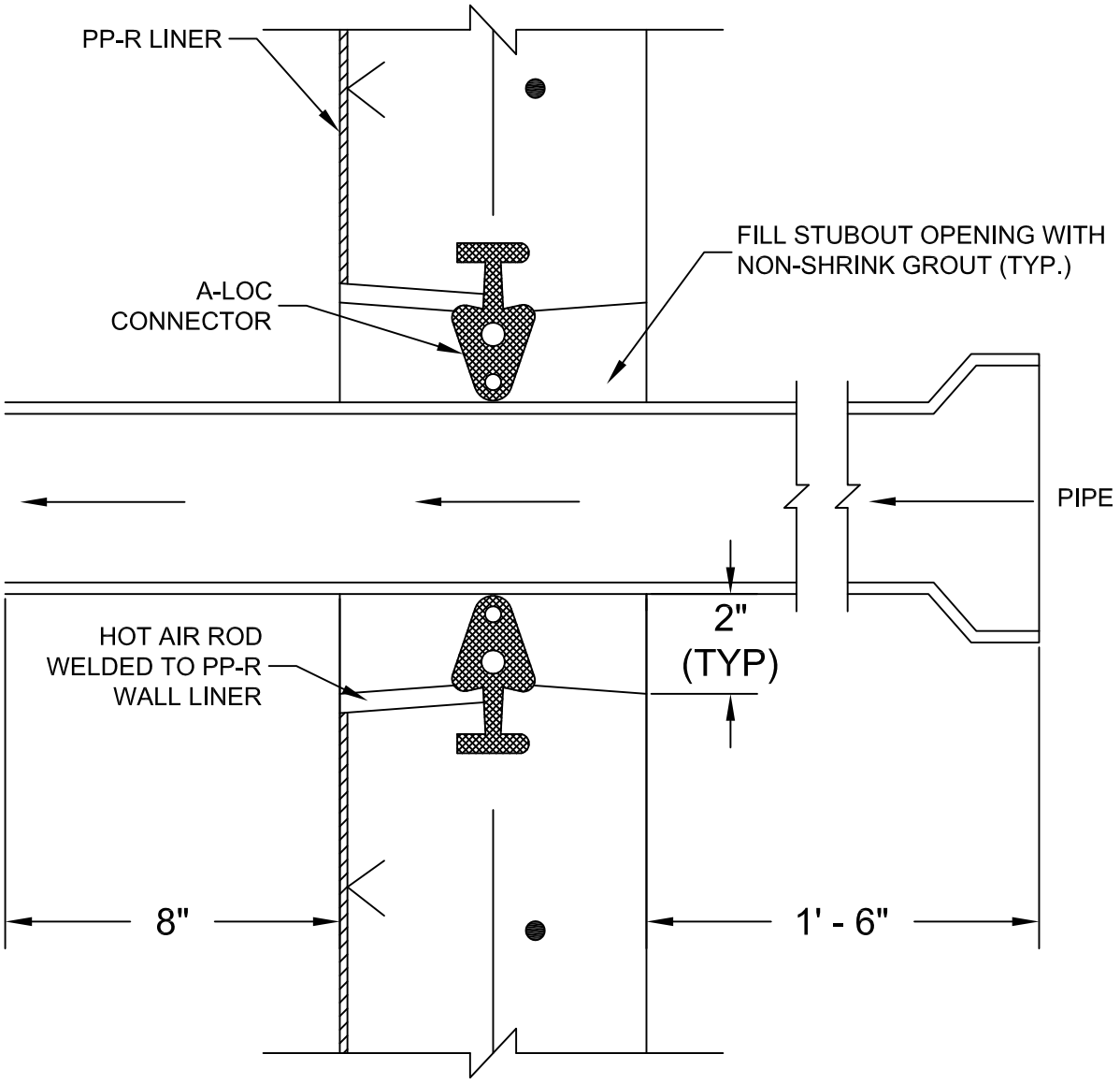

(PP-R LINER ONLY)

City of Key West Engineering Services 3132 Flagler Avenue, Key West, FL 33040	TITLE SEWER STUBOUTS IN MANHOLES			
	DRAWN JTJ	DETAIL	JUL 2015	
	SCALE NTS		DETAIL 7	