NOTE: SANITARY SEWER MH COVER SHOWN.
WHERE STORM WATER MH IS SPECIFIED,
COVER SHALL READ " STORM SEWER"

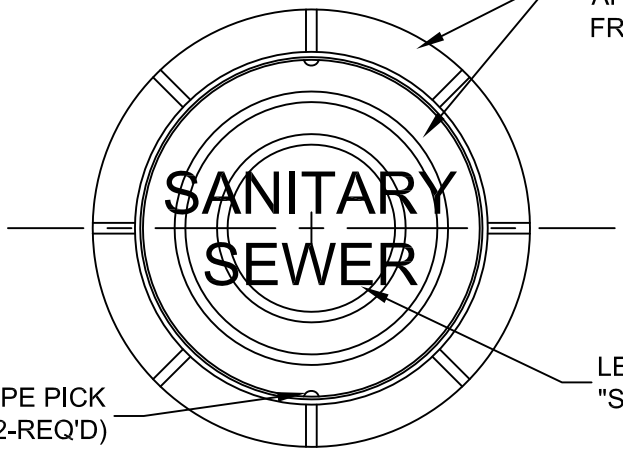

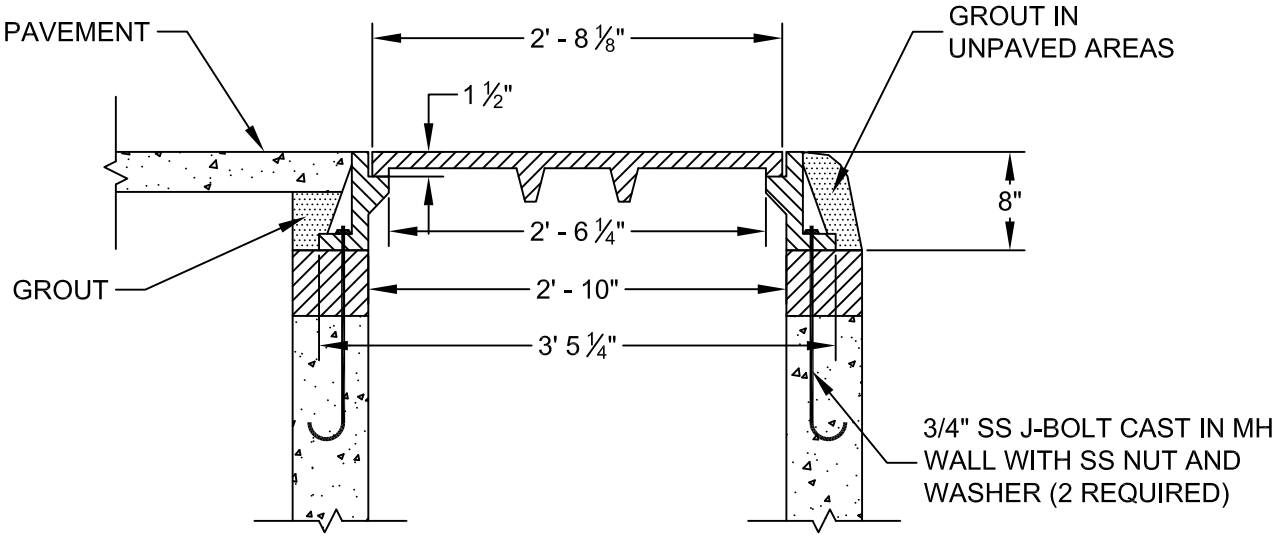

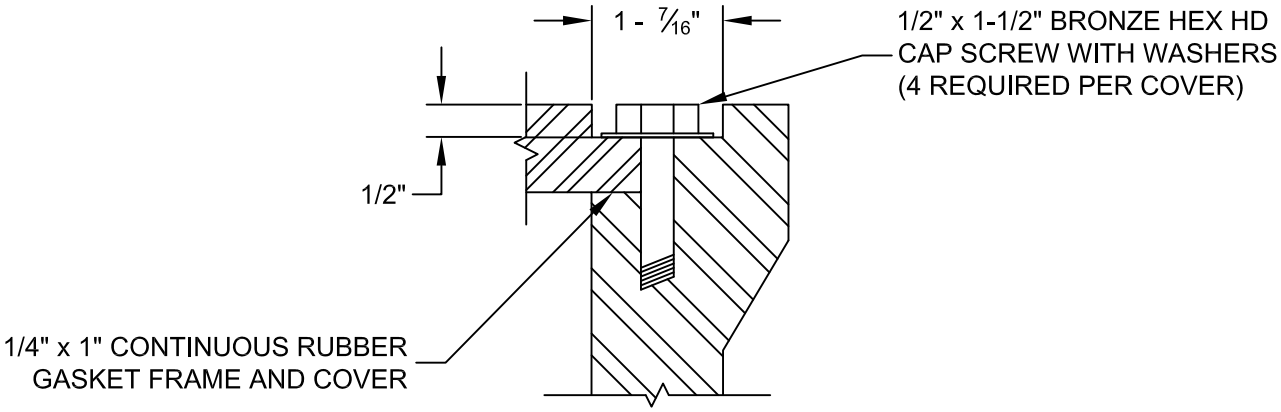

City of Key West Engineering Services 3132 Flagler Avenue, Key West, FL 33040	TITLE WATERTIGHT SANITARY/STORM MANHOLE			
	DRAWN JTJ	FRAME AND COVER	JUL 2015	
	SCALE NTS		DETAIL 4	