DOOR SCHEDULE-1ST FLOOR

DOOR NO.	TYPE MARK	ROOM NAME	ROOM NUMBER	DOOR DIMENSIONS WIDTH	DOOR DIMENSIONS HEIGHT	DOOR DIMENSIONS THICKNESS	UNDERCUT	DOOR MATERIAL	FRAME MATERIAL	FRAME JAMB	FRAME HEAD	FRAME THRES.	GLASS CLEAR FULLY TEMPERED GLASS	GLASS TINTED LAMINATED SAFETY GLASS	FIRE RATING RATED (C LABEL)	EXTERIOR DOORS (NOA) LARGE & SMALL MISSILE IMPACT LMI	DESIGN PRESSURE RATING POS	DESIGN PRESSURE RATING NEG	HARDWARE GROUP	WIND PRESSURES	COMMENTS 1
100A	I	PORTICO	100A	6' - 8"	7'-3"	1 7/8"		ALUM.	ALUM.	2/A11.5	3,4/A11.5	1/A11.5		YES		YES			9		EXISTING HISTORIC OPENING, EXIT DOOR, PANIC HARDWARE, TRANSOM ABOVE
101	A	RECEPTION	101	3' - 0"	7' - 0"	1 3/4"		ALUM.	ALUM.	2/A11.10, 20/A11.4	19/A11.4	NONE	YES						8		
102	B	SCHOOL BOARD	102	3' - 0"	7' - 0"	1 3/4"		WOOD	ALUM.	3/A11.10, 20/A11.4	19/A11.4	NONE							3		TEMPERED GLASS SIDELITE
103	A	PUBLIC WAITING	103	3' - 0"	7' - 0"	1 3/4"		ALUM.	ALUM.	3/A11.10, 20/A11.4	19/A11.4	NONE	YES						5		
104	B	DEPUTY	104	3' - 0"	7' - 0"	1 3/4"		WOOD	ALUM.	20/A11.4	19/A11.4	NONE							4		TEMPERED GLASS SIDELITE
105	C	STORAGE	105	3' - 0"	7' - 0"	1 3/4"		WOOD	H.M.	4/A11.10	6/A11.10	NONE							6		CARD READER. SEE SPECIFICATIONS.
106	B	OFFICE	106	3' - 0"	7' - 0"	1 3/4"		WOOD	ALUM.	7/A11.10	19/A11.4	NONE							3		TEMPERED GLASS SIDELITE
107	C	FITNESS / BREAK ROOM	107	3' - 0"	7' - 0"	1 3/4"		WOOD	H.M.	4/A11.10	6/A11.10	NONE							15		CARD READER. SEE SPECIFICATIONS.
107A	C	ELECT. CLOSET	107A	3' - 0"	7' - 0"	1 3/4"		WOOD	H.M.	4/A11.10	6/A11.10	8A/A11.10							17		
108	C	WOMEN'S SHOWER	108	3' - 0"	7' - 0"	1 3/4"		WOOD	H.M.	9/A11.10	9/A11.10	8B/A11.10							16		
109	C	MEN'S SHOWER	109	3' - 0"	7' - 0"	1 3/4"		WOOD	H.M.	9/A11.10	9/A11.10	8B/A11.10							16		
110	D	CORRIDOR	110	6' - 11"	6' - 9 1/2"	1 7/8"		ALUM.	ALUM.	10/A11.10	4/A11.5	1/A11.10		YES		YES			10		EXISTING HISTORIC OPENING
110A	D	CORRIDOR	110	6' - 2 1/2"	7' - 5 1/2"	1 7/8"		ALUM	ALUM	10/A11.10	10/A11.10	1/A11.5		YES		YES			9		EXISTING HISTORIC OPENING, EXIT DOOR, PANIC HARDWARE
111	C	WOMENS RESTROOM	111	3' - 0"	7' - 0"	1 3/4"		WOOD	H.M.	9/A11.10	9/A11.10	8B/A11.10							11		
112	C	MENS ROOM	112	3' - 0"	7' - 0"	1 3/4"		WOOD	H.M.	9/A11.10	9/A11.10	8B/A11.10							11		
113	B	COMMUNITY CONFERENCE ROOM	113	3' - 0"	7' - 0"	1 3/4"		WOOD	ALUM.	20/A11.4	19/A11.4	NONE							12		TEMPERED GLASS SIDELITE
114	F	LOBBY	100	6' - 0"	7' - 0"	1 3/4"		WOOD	H.M.	4/A11.10	6/A11.10	NONE							13		CARD READER. SEE SPECIFICATIONS. RESTORED HISTORIC DOOR.
114A	C	JANITOR CLOSET	114A	3' - 0"	7' - 0"	1 3/4"		WOOD	H.M.	4/A11.10	6/A11.10	8B/A11.10							27		
115	T	STAIRS	115	6' - 2 1/2"	7' - 5 1/2"	1 3/4"		ALUM.	ALUM.	16,23/A11.4	21/A11.4	15,18/A11.4			YES	YES			41		EXISTING HISTORIC OPENING, EXIT DOOR, PANIC HARDWARE. CARD READER: SEE SPECIFICATIONS.
115A	L	STAIRS	115	3' - 0"	7' - 0"	1 3/4"		METAL	METAL	16,23/A11.4	21,24/A11.4	15,18/A11.4			YES				7		FIRE RESISTIVE GLAZING, PANIC HARDWARE. CARD READER: SEE SPECIFICATIONS.
116	A	RECEPTION / ASSISTANT	116	3' - 0"	7' - 0"	1 3/4"		ALUM.	ALUM.	3/A11.10, 20/A11.4	19/A11.4	NONE	YES						8		
117	B	CONFERENCE RM	117	3' - 0"	7' - 0"	1 3/4"		WOOD	ALUM.	15/A11.10,20/A11.4	15/A11.10	NONE							2		TEMPERED GLASS SIDELITE
117A	B	CONFERENCE RM	117	3' - 0"	7' - 0"	1 3/4"		WOOD	ALUM	7,11/A11.10	15/A11.10	NONE							4		TEMPERED GLASS SIDELITE
118	B	MAYOR	118	3' - 0"	7' - 0"	1 3/4"		WOOD	ALUM.	11/A11.10	11/A11.10SIM.	NONE							1		TEMPERED GLASS SIDELITE
119	D	CONFERENCE RM	119	7' - 0"	6' - 11"	1 3/4"		ALUM.	ALUM.	10/A11.10	4/A11.5	1/A11.10		YES		YES			10		EXISTING HISTORIC OPENING
120	B	OFFICE	120	3' - 0"	7' - 0"	1 3/4"		WOOD	ALUM.	12/A11.10	15/A11.10	NONE							3		TEMPERED GLASS SIDELITE
121	B	OFFICE	121	3' - 0"	7' - 0"	1 3/4"		WOOD	ALUM.	12/A11.10	15/A11.10	NONE							3		TEMPERED GLASS SIDELITE
122	B	OFFICE	122	3' - 0"	7' - 0"	1 3/4"		WOOD	ALUM.	15/A11.10	15/A11.10	NONE							3		TEMPERED GLASS SIDELITE
123	C	STORAGE	123	3' - 0"	7' - 0"	1 3/4"		WOOD	ALUM.	4/A11.10	6/A11.10	NONE							34		
124	F	CORRIDOR	110	6' - 0"	7' - 0"	1 3/4"		WOOD	H.M.	13/A11.10	13/A11.10SIM.	NONE							20		EXIT DOOR, PANIC HARDWARE, RESTORED HISTORIC DOOR
124A	S	COMMISSION CHAMBER	124	3' - 0"	8' - 0"	1 7/8"		ALUM.	ALUM.	2/A11.5	3,4/A11.5	1/A11.10		YES		YES			42		
124B	G	COMMISSION CHAMBER	124	3' - 0"	7' - 0"	1 7/8"		ALUM.	ALUM.	2/A11.5	3,4/A11.5	1/A11.10				YES			43		EXISTING HISTORIC OPENING, EXIT DOOR, PANIC HARDWARE
124C	S	COMMISSION CHAMBER	124	3' - 0"	8' - 0"	1 3/4"		ALUM.	ALUM.	2/A11.5	3,4/A11.5	1/A11.10		YES		YES			42		
124D	G	COMMISSION CHAMBER	124	3' - 0"	7' - 0"	1 3/4"		ALUM.	ALUM.	2/A11.5	3,4/A11.5	1/A11.10				YES			43		EXISTING HISTORIC OPENING, EXIT DOOR, PANIC HARDWARE
125	C	AUDIO VIDEO CONTROL BOOTH / STAFF ROOM	125	3' - 6"	7' - 0"	1 3/4"		WOOD	H.M.	13/A11.10	13/A11.10SIM.	NONE							19		CARD READER. SEE SPECIFICATIONS.
126	M	EMR	126	3' - 6"	7' - 0"	1 3/4"		H.M.	H.M.	13/A11.5	13/A11.5SIM.	8A/A11.10			YES				18		
127	Q	EMR	127	3' - 0"	7' - 0"	1 3/4"		METAL	METAL	14/A11.10	14/A11.10SIM.	8/A11.5			YES				45		EXISTING HISTORIC OPENING
128	Q	ANTE ROOM	128	3' - 0"	7' - 0"	1 3/4"		METAL	METAL	14/A11.10	14/A11.10SIM.	8/A11.5							44		EXISTING HISTORIC OPENING, CARD READER: SEE SPECIFICATIONS.
129	D	CORRIDOR SOUTH	129S	6' - 2 1/2"	7' - 7 1/2"	1 7/8"		ALUM	ALUM	10/A11.10	10/A11.10	1/A11.5		YES		YES			9		EXISTING HISTORIC OPENING, EXIT DOOR, PANIC HARDWARE
129A	E	CORRIDOR SOUTH	129S	6' - 8"	11' - 10 1/2"	1 7/8"		ALUM	ALUM	10/A11.10	10/A11.10	1/A11.5		YES		YES			9		EXISTING HISTORIC OPENING, EXIT DOOR, PANIC HARDWARE
129B	E	CORRIDOR NORTH	129N	6' - 8"	11' - 10 1/2"	1 7/8"		ALUM	ALUM	10/A11.10	10/A11.10	1/A11.5		YES		YES			9		EXISTING HISTORIC OPENING, EXIT DOOR, PANIC HARDWARE
130	B	OPEN OFFICE 1	130	3' - 0"	7' - 0"	1 3/4"		WOOD	ALUM.	20/A11.4	19/A11.4	NONE							2		TEMPERED GLASS SIDELITE
130A	B	OPEN OFFICE 1	130	3' - 0"	7' - 0"	1 3/4"		WOOD	ALUM.	20/A11.4	19/A11.4	NONE							2		TEMPERED GLASS SIDELITE
130B	D	OPEN OFFICE 1	130	7' - 4"	7' - 0"	1 7/8"		ALUM.	ALUM.	10/A11.10	10/A11.10SIM.	1/A11.10		YES		YES			10		EXISTING HISTORIC OPENING. DOOR CONTACTS: SEE SPECIFICATIONS.
131	B	OFFICE	131	3' - 0"	7' - 0"	1 3/4"		WOOD	ALUM	3/A11.10	19/A11.4	13/A11.4							3		
132	A	CONFERENCE RM	132	3' - 0"	7' - 0"	1 3/4"		ALUM	ALUM	20/A11.4	19/A11.4	13/A11.4	YES						22		
133	B	OFFICE	133	3' - 0"	7' - 0"	1 3/4"		WOOD	ALUM	3/A11.10	19/A11.4	13/A11.4							3		TEMPERED GLASS SIDELITE
134	C	CORRIDOR SOUTH	129S	3' - 0"	7' - 0"	1 3/4"		WOOD	H.M.	4/A11.10	6/A11.10	8A/A11.10							17		
135	B	CORRIDOR SOUTH	129S	3' - 0"	7' - 0"	1 3/4"		WOOD	ALUM	20/A11.10	20/A11.10	NONE							21		TEMPERED GLASS SIDELITE. CARD READER: SEE SPECIFICATIONS.
135A	B	CORRIDOR NORTH	129N	3' - 0"	7' - 0"	1 3/4"		WOOD	ALUM	20/A11.10	20/A11.10	NONE							21		TEMPERED GLASS SIDELITE. CARD READER: SEE SPECIFICATIONS.
136	B	BREAK RM.	136	3' - 0"	7' - 0"	1 3/4"		WOOD	ALUM	3/A11.10	19/A11.4	13/A11.4							26		TEMPERED GLASS SIDELITE
138	A	CONFERENCE RM	138	3' - 0"	7' - 0"	1 3/4"		ALUM	ALUM	20/A11.4	19/A11.4	NONE	YES						25		
139	B	OFFICE	139	3' - 0"	7' - 0"	1 3/4"		WOOD	ALUM.	3/A11.10, 20/A11.4	19/A11.4	NONE							3		TEMPERED GLASS SIDELITE
140	B	OFFICE	140	3' - 0"	7' - 0"	1 3/4"		WOOD	ALUM.	3/A11.10, 20/A11.4	19/A11.4	NONE							3		TEMPERED GLASS SIDELITE
141	A	OFFICE	141	3' - 0"	7' - 0"	1 3/4"		ALUM.	ALUM.	12/A11.10	19/A11.4	NONE	YES						24		
141A	A	OFFICE	141	3' - 0"	7' - 0"	1 3/4"		ALUM.	ALUM.	12/A11.10	19/A11.4	NONE	YES						24		
142	T	STAIRS	142	6' - 2 1/2"	7' - 5 1/2"	1 3/4"		METAL	METAL	16,23/A11.4	21/A11.4	15,18/A11.4		YES	YES	YES			41		EXISTING HISTORIC OPENING, EXIT DOOR, PANIC HARDWARE. CARD READER: SEE SPECIFICATIONS.
142A	L	STAIRS	142	3' - 0"	7' - 0"	1 3/4"		METAL	METAL	16,23/A11.4	21,24/A11.4	15,18/A11.4			YES				7		FIRE RESISTIVE GLAZING, EXIT DOOR, PANIC HARDWARE. CARD READER: SEE SPECIFICATIONS.
143	H	SOUTH BREEZEWAY GATE	157	3' - 6 1/2"	6' - 0"	1 3/4"		ALUM.	ALUM.	1,2/A19.3	NONE	NONE							47, SEE 2/A19.3		EXIT DOOR, PANIC HARDWARE. SEE 2/A19.3.
144	C	JANITOR	144	3' - 0"	7' - 0"	1 3/4"		WOOD	H.M.	4/A11.10	6/A11.10	8B/A11.10							27		
144A	K	JANITOR BLIND DOOR	144	3' - 4"	10' - 0"	1 3/4"		ALUM.	ALUM.	20/A11.5	20/A11.5	21/A11.5		YES		YES			28		FIXED DOOR
145	C	MEN'S RESTROOM	145	3' - 0"	7' - 0"	1 3/4"		WOOD	H.M.	9/A11.10	9/A11.10	8B/A11.10							16		
146	C	WOMEN'S RESTROOM	146	3' - 0"	7' - 0"	1 3/4"		WOOD	H.M.	9/A11.10	9/A11.10	8B/A11.10							16		
147	B	CORRIDOR	147	3' - 0"	7' - 0"	1 3/4"		WOOD	ALUM.	3/A11.10, 20/A11.4	19/A11.4	8B/A11.10							12		TEMPERED GLASS SIDELITE, CARD READER: SEE SPECIFICATIONS.
148	C	MONEY ROOM	148	3' - 0"	7' - 0"	1 3/4"		WOOD	H.M.	4/A11.10	6/A11.10	NONE							15		CARD READER. SEE SPECIFICATIONS.
149	B	OFFICE	149	3' - 0"	7' - 0"	1 3/4"		WOOD	ALUM	3/A11.10	19/A11.4	13/A11.4							3		TEMPERED GLASS SIDELITE
150	A	OFFICE	150	3' - 0"	7' - 0"	1 3/4"		ALUM.	ALUM.	20/A11.4	19/A11.4	NONE	YES						3		
151	A	OFFICE	151	3' - 0"	7' - 0"	1 3/4"		ALUM.	ALUM.	20/A11.4	19/A11.4	NONE	YES						3		
152	D	BREAK/COPY	152	7' - 0"	6' - 11"	1 7/8"		ALUM.	ALUM.	2/A11.5	4/A11.5	1/A11.10		YES		YES			10		EXISTING HISTORIC OPENING
154	O	MAINTENANCE STRG	154	6' - 0"	7' - 0"	1 3/4"		METAL	METAL	7/A11.5	7/A11.5	8/A11.5				YES			46	+150, -150	
155	Q	CHAIR STRG	155	3' - 0"	7' - 0"	1 3/4"		METAL	METAL	7/A11.5	7/A11.5	8/A11.5				YES			45	+120, -120	
156	O	ELECTRICAL RM	156	6' - 0"	7' - 0"	1 3/4"		METAL	METAL	7/A11.5	7/A11.5	8/A11.5			YES	YES			9	+150, -150	PANIC HARDWARE
161	R	LOBBY	100	10' - 11 1/2"	12' - 0"	2 1/2"		METAL	METAL	11,12/A11.5	10/A11.5	NONE							14		ROLL UP DOOR
162	H	GATE		3' - 6 1/2"	6' - 0"	1 3/4"		ALUM.	ALUM.	1,2/A19.3	NONE	NONE							47, SEE 2/A19.3		EXIT DOOR, PANIC HARDWARE. SEE 2/A19.3.
183	H	GATE	158	3' - 6 1/2"	6' - 0"	1 3/4"		ALUM.	ALUM.	1,2/A19.3	NONE	NONE							47, SEE 2/A19.3		EXIT DOOR, PANIC HARDWARE. SEE 2/A19.3.

NOTE: SEE MECHANICAL DRAWINGS FOR DOOR UNDERCUT REQUIREMENTS

DOORS OMITTED: 153, 217, 230, 245, 247

PERMIT SET

REVISIONS: NO.	DESCRIPTION	DATE
1	ADDENDUM 2	10/02/14

KEY WEST CITY HALL
AT GLYNN ARCHER
1300 WHITE STREET KEY WEST, FLORIDA
CITY OF KEY WEST

MCHARRYASSOCIATES
ARCHITECTURE / ENGINEERING / INTERIORS
AAC000986 EB0003663
2780 SW DOUGLAS ROAD, SUITE 302
MIAMI, FLORIDA 33133 (305) 445-3763
WWW.MCHARRY.COM

410 Angela Street
Key West, Florida 33040
Telephone (305) 296-1347
Facsimilie (305) 296-2727
Florida License AAC002022
Bender & Associates ARCHITECTS p.a.

Project No: 1305
DOOR SCHEDULE
Date: 8/8/14

A11.0

DOOR SCHEDULE-2ND FLOOR

DOOR NO.	Type Mark	ROOM NAME	ROOM NUMBER	DOOR DIMENSIONS WIDTH	DOOR DIMENSIONS HEIGHT	DOOR DIMENSIONS THICKNESS	UNDERCUT	DOOR MATERIAL	FRAME MATERIAL	FRAME JAMB	FRAME HEAD	FRAME THRES.	GLASS CLEAR FULLY TEMPERED GLASS	GLASS TINTED LAMINATED SAFETY GLASS	FIRE RATING RATED (C LABEL)	EXTERIOR DOORS (NOA) LARGE & SMALL MISSILE IMPACT LMI	DESIGN PRESSURE RATING POS	DESIGN PRESSURE RATING NEG	HARDWARE GROUP	WIND PRESSURES	COMMENTS
201	C	WOMEN'S RESTROOM	201	3' - 0"	7' - 0"	1 3/4"	NOTE: SEE MECHANICAL DRAWINGS FOR DOOR UNDERCUT REQUIREMENTS	WOOD	H.M.	9/A11.10	9/A11.10	8B/A11.10							16		
202	C	MEN'S RESTROOM	202	3' - 0"	7' - 0"	1 3/4"		WOOD	H.M.	9/A11.10	9/A11.10	8B/A11.10							16		
203	C	JANITOR	203	3' - 0"	7' - 0"	1 3/4"		WOOD	H.M.	4/A11.10	6/A11.10	8B/A11.10							31		
204	C	ELECT. RM.	204	3' - 0"	7' - 0"	1 3/4"		WOOD	H.M.	4/A11.10	6/A11.10	8A/A11.10							17		
205	A	RECEPTION/WAITING	205	3' - 0"	7' - 0"	1 3/4"		ALUM.	ALUM.	2/A11.10, 20/A11.4	19/A11.4	NONE	YES						33		
205A	A	CORRIDOR	207A	2' - 11"	6' - 11 1/2"	1 3/4"		ALUM.	ALUM.	3/A11.10, 20/A11.4	19/A11.4	NONE	YES						32		
205B	J	CORRIDOR	207A	3' - 0"	9' - 10"	1 3/4"		ALUM.	ALUM.	10/A11.10	10/A11.10 SIM.	19/A11.10		YES		YES			30		EXISTING HISTORIC OPENING
206	B	CITY ATTORNEY	206	3' - 0"	7' - 0"	1 3/4"		WOOD	ALUM.	11/A11.10	11/A11.10 SIM.	NONE							3		TEMPERED GLASS SIDELITE
207	A	OFFICE	207	3' - 0"	7' - 0"	1 3/4"		ALUM.	ALUM.	15/A11.10, 20/A11.4	19/A11.4	NONE	YES						29		
208	A	OFFICE	208	3' - 0"	7' - 0"	1 3/4"		ALUM.	ALUM.	3/A11.10, 20/A11.4	19/A11.4	NONE	YES						29		
209	A	OFFICE	209	3' - 0"	7' - 0"	1 3/4"		ALUM.	ALUM.	3/A11.10, 20/A11.4	19/A11.4	NONE	YES						29		
210	A	OFFICE	210	3' - 0"	7' - 0"	1 3/4"		ALUM.	ALUM.	3/A11.10, 20/A11.4	19/A11.4	NONE	YES						29		
212	C	FILE STORAGE	212	3' - 0"	7' - 0"	1 3/4"		WD.	H.M.	4/A11.10	6/A11.10	NONE							31		
213	B	LAW LIBRARY / CONFERENCE	213	3' - 0"	7' - 0"	1 3/4"		WOOD	ALUM.	12/A11.10	19/A11.4	NONE							3		TEMPERED GLASS SIDELITE
214	P	MECH.	214	6' - 0"	7' - 0"	1 3/4"		WD OVER MTL.	H.M.	13/A11.5	13/A11.5SIM.	8A/A11.10			YES				35		RATED WD. DOOR AVAILABLE FROM MAIMAN, INC.
215	L	STAIRS	215	3' - 0"	7' - 0"	1 3/4"		METAL	METAL	16,23/A11.4	21,24/A11.4	15,18/A11.4	RATED GLASS		YES				7		EXIT DOOR, PANIC HARDWARE. CARD READER: SEE SPECIFICATIONS.
216	A	EXECUTIVE CONFERENCE ROOM	216	3' - 0"	7' - 0"	1 3/4"		ALUM.	ALUM.	20/A11.4	19/A11.4	NONE	YES						29		
216A	A	EXECUTIVE CONFERENCE ROOM	216	3' - 0"	7' - 0"	1 3/4"		ALUM.	ALUM.	2/A11.10, 20/A11.4	19/A11.4	NONE	YES						29		
218	P	MECH	218	6' - 0"	7' - 0"	1 3/4"		WD OVER MTL.	H.M.	13/A11.5	13/A11.5SIM.	8A/A11.10			YES				35		
219	A	CONFERENCE RM	219	3' - 0"	7' - 0"	1 3/4"		ALUM.	ALUM.	2/A11.10, 20/A11.4	19/A11.4	NONE	YES						29		
220	A	WAITING/RECEPTION	220	3' - 0"	7' - 0"	1 3/4"		ALUM.	ALUM.	3/A11.10	19/A11.4	NONE	YES						8		
221	A	OFFICE	221	3' - 0"	7' - 0"	1 3/4"		ALUM.	ALUM.	3/A11.10, 20/A11.4	19/A11.4	NONE	YES						29		
222	A	OFFICE	222	3' - 0"	7' - 0"	1 3/4"		ALUM.	ALUM.	3/A11.10, 20/A11.4	19/A11.4	NONE	YES						29		
223	C	STORAGE	223	3' - 0"	7' - 0"	1 3/4"		WD.	H.M.	16/A11.10	6/A11.10	NONE							34		
224	A	WAITING/RECEPTION	220	3' - 0"	7' - 0"	1 3/4"		ALUM.	ALUM.	15/A11.10	15/A11.10	NONE	YES						3		
225	A	OFFICE	225	3' - 0"	7' - 0"	1 3/4"		ALUM.	ALUM.	15/A11.10, 20/A11.4	15/A11.10	NONE	YES						29		
226	J	OFFICE	226	3' - 0"	9' - 10"	1 3/4"		ALUM.	ALUM.	10/A11.10	10/A11.10 SIM.	19/A11.10		YES		YES			30		EXISTING HISTORIC OPENING
227	A	OFFICE	227	3' - 0"	7' - 0"	1 3/4"		WD.	H.M.	15/A11.10, 20/A11.4	15/A11.10	NONE	YES						29		
228	B	WAITING/RECEPTION	220	3' - 0"	7' - 0"	1 3/4"		WOOD	ALUM.	15/A11.10, 20/A11.4	15/A11.10	NONE							3		TEMPERED GLASS SIDELITE
229	Q	CORRIDOR	229	3' - 0"	7' - 0"	1 3/4"		H.M.	H.M.	17/A11.10	17/A11.10	8/A11.5				YES			36	+120, -120	
231	A	OPEN OFFICE 4	231	3' - 0"	7' - 0"	1 3/4"		ALUM.	ALUM.	20/A11.10	20/A11.10	NONE	YES						8		
232	A	OFFICE	232	3' - 0"	7' - 0"	1 3/4"		ALUM.	ALUM.	3/A11.10,20/A11.4	19/A11.4	NONE	YES						29		
233	A	OFFICE	233	3' - 0"	7' - 0"	1 3/4"		ALUM.	ALUM.	3/A11.10,20/A11.4	19/A11.4	NONE	YES						29		
234	A	OFFICE	234	3' - 0"	7' - 0"	1 3/4"		ALUM.	ALUM.	3/A11.10,20/A11.4	19/A11.4	NONE	YES						29		
235	J	OPEN CONFERENCE	235	3' - 0"	9' - 10"	1 3/4"		ALUM.	ALUM.	10/A11.10	10/A11.10 SIM.	19/A11.10		YES		YES			30		EXISTING HISTORIC OPENING
236	A	OFFICE	236	3' - 0"	7' - 0"	1 3/4"		ALUM.	ALUM.	3/A11.10,20/A11.4	19/A11.4	NONE	YES						29		
237	A	OFFICE	237	3' - 0"	7' - 0"	1 3/4"		ALUM.	ALUM.	3/A11.10,20/A11.4	19/A11.4	NONE	YES						29		
238	C	STORAGE	238	3' - 0"	7' - 0"	1 3/4"		WD.	H.M.	4/A11.10	6/A11.10	NONE							6		
239	B	OFFICE	239	3' - 0"	7' - 0"	1 3/4"		WD.	ALUM.	3/A11.10,20/A11.4	19/A11.4	NONE							3		TEMPERED GLASS SIDELITE
240	B	I.T. TRAINING	240	3' - 0"	7' - 0"	1 3/4"		WD.	ALUM.	3/A11.10,20/A11.4	19/A11.4	NONE							3		TEMPERED GLASS SIDELITE
241	C	I.T. STORAGE	241	3' - 0"	7' - 0"	1 3/4"		WOOD	H.M.	21/A11.10	6/A11.10	NONE							27		
242	L	STAIRS	242	3' - 0"	7' - 0"	1 3/4"		METAL	METAL	16,23/A11.4	21,24/A11.4	15,18/A11.4	RATED GLASS		YES				7		FIRE RESISTIVE GLAZING, EXIT DOOR, PANIC HARDWARE. CARD READER: SEE SPECIFICATIONS.
243	A	WAITING	243	3' - 0"	7' - 0"	1 3/4"		ALUM.	ALUM.	3/A11.10,20/A11.4	19/A11.4	NONE	YES						39		
244	C	SERVER / PHONE ROOM	244	3' - 0"	7' - 0"	1 3/4"		H.M.	H.M.	13/A11.10	13/A11.10 SIM.	NONE							17		CARD READER. SEE SPECIFICATIONS.
246	A	OFFICE	246	3' - 0"	7' - 0"	1 3/4"		ALUM.	ALUM.	3/A11.10,20/A11.4	19/A11.4	NONE	YES						29		
248	P	MECH	248	6' - 0"	7' - 0"	1 3/4"		WD OVER MTL.	H.M.	13/A11.5	13/A11.5SIM.	8A/A11.10			YES				35		RATED WD. DOOR AVAILABLE FROM MAIMAN, INC.
249	C	ELECT. CLOSET	249	3' - 0"	7' - 0"	1 3/4"		WOOD	H.M.	4/A11.10	6/A11.10	8A/A11.10							17		
250	C	JANITOR	250	3' - 0"	7' - 0"	1 3/4"		WOOD	H.M.	4/A11.10	6/A11.10	8A/A11.10							31		
251	B	OPEN OFFICE 6	251	3' - 0"	7' - 0"	1 3/4"		WD.	ALUM.	3/A11.10,20/A11.4	19/A11.4	NONE							12		TEMPERED GLASS SIDELITE
252	B	OFFICE	252	3' - 0"	7' - 0"	1 3/4"		WOOD	ALUM.	12/A11.10	19/A11.4	NONE							3		TEMPERED GLASS SIDELITE
254	C	FINANCE STORAGE	254	3' - 0"	7' - 0"	1 3/4"		WD.	H.M.	4/A11.10	6/A11.10	NONE							27		
255	A	OFFICE	255	3' - 0"	7' - 0"	1 3/4"		ALUM.	ALUM.	3/A11.10,20/A11.4	19/A11.4	NONE	YES						24		
255A	B	OFFICE	255	3' - 0"	7' - 0"	1 3/4"		ALUM.	ALUM.	3/A11.10,20/A11.4	19/A11.4	NONE							3		TEMPERED GLASS SIDELITE
256	A	CONFERENCE RM	256	3' - 0"	7' - 0"	1 3/4"		ALUM.	ALUM.	3/A11.10,20/A11.4	19/A11.4	NONE	YES						25		
257	A	OFFICE	257	3' - 0"	7' - 0"	1 3/4"		ALUM.	ALUM.	3/A11.10,20/A11.4	19/A11.4	NONE	YES						24		
258	A	OFFICE	258	3' - 0"	7' - 0"	1 3/4"		ALUM.	ALUM.	3/A11.10,20/A11.4	19/A11.4	NONE	YES						24		
259	A	OPEN OFFICE	259	3' - 0"	7' - 0"	1 3/4"		ALUM.	ALUM.	20/A11.4	19/A11.4	NONE	YES						8		
259A	J	OPEN OFFICE	259	3' - 0"	9' - 10"	1 3/4"		ALUM.	ALUM.	10/A11.10	10/A11.10 SIM.	19/A11.10		YES		YES			30		EXISTING HISTORIC OPENING
260	B	OFFICE	260	3' - 0"	7' - 0"	1 3/4"		WD.	ALUM.	15/A11.10 SIM.	15/A11.10 SIM.	NONE							3		TEMPERED GLASS SIDELITE
261	C	STORAGE	261	3' - 0"	7' - 0"	1 3/4"		WD.	H.M.	4/A11.10	6/A11.10	NONE							6		
262	A	CONFERENCE RM	262	3' - 0"	6' - 11 1/2"	1 3/4"		ALUM.	ALUM.	15/A11.10	15/A11.10 SIM.	NONE	YES						24		
263	A	OFFICE	263	3' - 0"	7' - 0"	1 3/4"		ALUM.	ALUM.	15/A11.10	15/A11.10 SIM.	NONE	YES						24		
265	C	MEN'S RESTROOM	265	3' - 0"	7' - 0"	1 3/4"		WOOD	H.M.	9/A11.10	9/A11.10	8B/A11.10							16		
266	C	WOMENS RESTROOM	266	3' - 0"	7' - 0"	1 3/4"		WOOD	H.M.	9/A11.10	9/A11.10	8B/A11.10							16		

DOORS OMITTED: 153, 217, 230, 245, 247, 253, 264

REVISIONS:

NO.	DESCRIPTION	DATE
1	ADDENDUM 2	10/02/14

KEY WEST CITY HALL
AT GLYNN ARCHER
1300 WHITE STREET KEY WEST, FLORIDA
CITY OF KEY WEST

MCHARRYASSOCIATES
ARCHITECTURE / ENGINEERING / INTERIORS
AAC000986 EBC003663
2780 SW DOUGLAS ROAD, SUITE 302
MIAMI, FLORIDA 33133 (305)445-3765
WWW.MCHARRY.COM

410 Angela Street
Key West, Florida 33040
Telephone (305) 296-1347
Facsimilie (305) 296-2727
Florida License AAC002022
Bender & Associates ARCHITECTS p.a.

Project №: 1305

DOOR SCHEDULE

Date: 8/8/14

PERMIT SET

A11.1

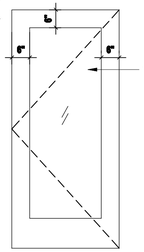

TYPE A:
INTERIOR PTD. ALUM. STOREFRONT DOOR
IN STOREFRONT FRAME WITH FULL LITE
TEMPERED GLAZING.

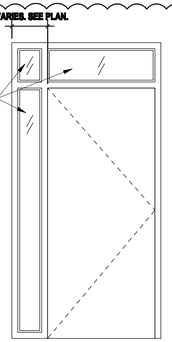

TYPE B:
INTERIOR SINGLE FLUSH STAINED WD. DOOR
IN ALUM. STOREFRONT FRAME WITH LATCH SIDELITE
AND TRANSOM

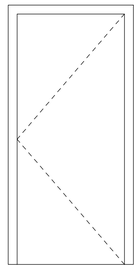

TYPE C:
INTERIOR SINGLE FLUSH STAINED WD.
DOOR IN HOLLOW METAL FRAME

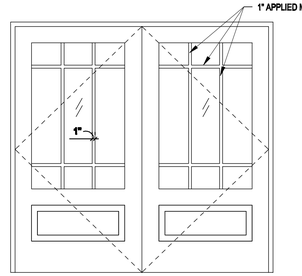

TYPE D:
CGI 450 ESTATE SERIES

PAINTED METAL EXTERIOR HISTORIC DOUBLE DOOR
WITH IMPACT GLAZING.

DESIGN PRESSURE REQUIRED: +78.7, -85.6

ADA THRESHOLD

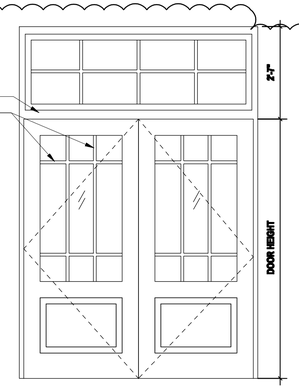

TYPE E:
CGI 450 ESTATE SERIES

PAINTED METAL HISTORIC DOUBLE DOOR WITH TRANSOM.
EXTERIOR DOOR, IMPACT GLAZING.

DESIGN PRESSURE REQUIRED: +76.3, -83.3

ADA THRESHOLD

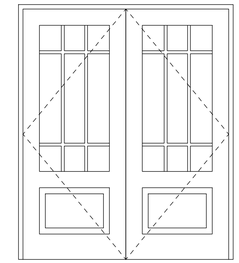

TYPE F:
STAINED WD. INTERIOR GLAZED DOOR
RECONDITION HISTORIC DOOR FROM BUILDING A.
SEE DEMO PLAN FOR LOCATION.

PANIC HARDWARE

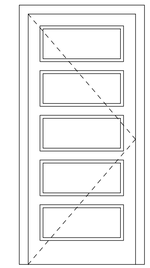

TYPE G:
CGI 450 ESTATE SERIES

PAINTED METAL 5 PANEL EXTERIOR DOOR.
IMPACT RATED.

DESIGN PRESSURE REQUIRED: +79.4, -86.3

ADA THRESHOLD

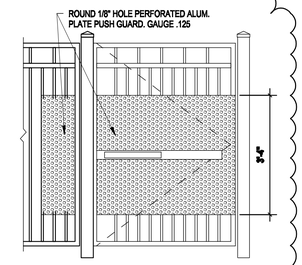

TYPE H:
PAINTED ALUM. ORNAMENTAL GATE
PANIC HARDWARE

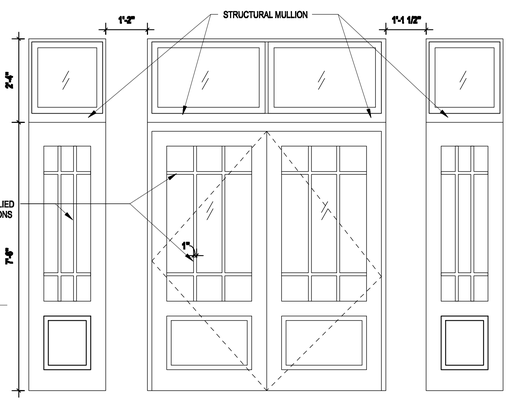

TYPE I:
CGI 450 ESTATE SERIES

EXTERIOR HISTORIC DOUBLE DOOR MAIN ENTRANCE WITH TRANSOM AND SIDELITES, IMPACT GLAZING.

DESIGN PRESSURE REQUIRED: +79.4, -86.3

ADA THRESHOLD

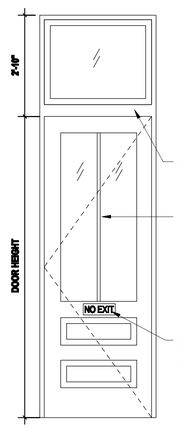

TYPE J:
CGI 450 ESTATE SERIES

HISTORIC EXTERIOR SINGLE DOOR
WITH TRANSOM, IMPACT GLAZING.

DESIGN PRESSURE REQUIRED:
+77.9, -84.8

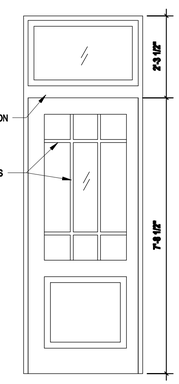

TYPE K:
CGI 450 ESTATE SERIES

HISTORIC EXTERIOR SINGLE FIXED
DOOR WITH TRANSOM, IMPACT
GLAZING.

DESIGN PRESSURE REQUIRED:
+77.1, -84.1

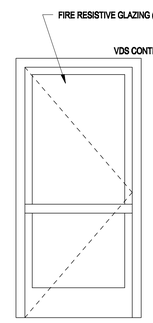

TYPE L:
INTERIOR 1-HOUR GLAZED MTL.
DOOR

VETROTECH SAINT-GOBAIN
VDS-60

PANIC HARDWARE

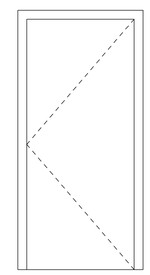

TYPE M:
INTERIOR UL 'C' LABEL PAINTED MTL.
FLUSH DOOR.

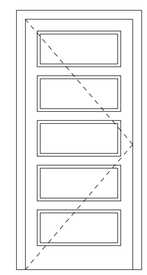

TYPE N:
CGI 450 ESTATE SERIES

EXTERIOR FIVE PANEL METAL DOOR.

DESIGN PRESSURE REQUIRED:
+79.4, -86.3

ADA THRESHOLD

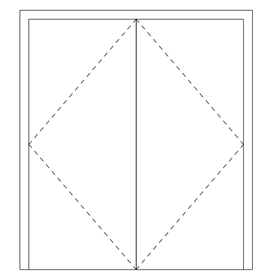

TYPE O:
EXTERIOR PAINTED MTL. FLUSH IMPACT DOOR. 1HR RATING

DESIGN PRESSURE REQUIRED: +79.4, -86.3
DESIGN PRESSURE PROVIDED: +150, -150

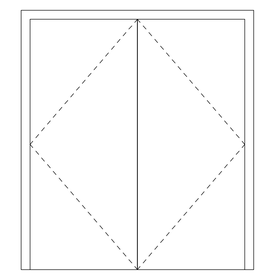

TYPE P:
STAINED WD. UL 'C' LABEL INTERIOR DOOR

MAIMAN OR EQUAL

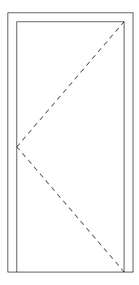

TYPE Q:
PAINTED MTL. EXTERIOR IMPACT RATED
FLUSH DOOR.

UL 'C' LABEL

DESIGN PRESSURE REQUIRED: +79.4, -86.3
DESIGN PRESSURE PROVIDED: +120, -120

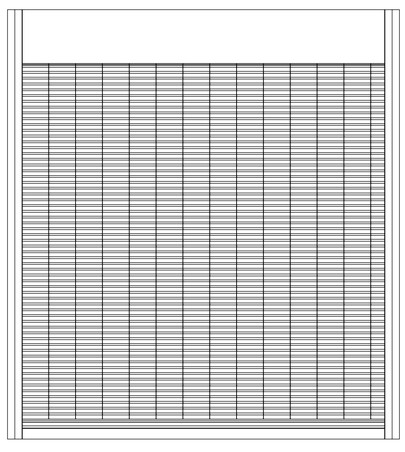

TYPE R:
CORNELL IRON "VISIONAIRE"
MODEL ESG10
ALUMINUM RODS.

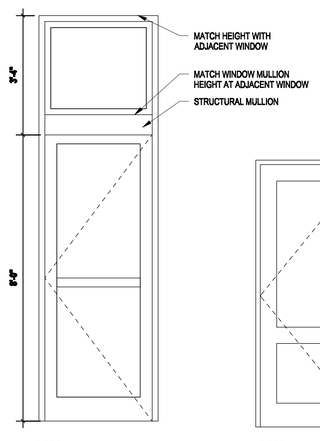

TYPE S:
CGI 450 ESTATE SERIES
METAL DOOR, IMPACT GLAZING
DESIGN PRESSURE REQUIRED +79.4, -86.3
ADA THRESHOLD.
PANIC HARDWARE.

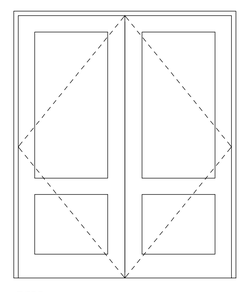

TYPE T:
VETROTECH ST. GOBAIN
VDS (HI) DOOR SYSTEM
VDS CONTRAFLAM 60 HI GLAZING
1 HOUR RATING
PAINTED METAL EXTERIOR DOUBLE DOOR WITH IMPACT GLAZING.
DESIGN PRESSURES +/- 65PSF
ADA THRESHOLD

DOOR NOTES:
1. DUE TO ADA THRESHOLD REQUIREMENTS, WATER INFILTRATION REQUIREMENTS DO NOT HAVE TO BE MET.
2. THE ELEVATION OF THE FLOOR SURFACES ON BOTH SIDES OF ALL DOORS SHALL NOT VARY BY MORE THAN 1/2", IN COMPLIANCE WITH NFPA 101, SECTION 7.2.1.3.
3. RAISED THRESHOLDS AND FLOOR LEVEL CHANGES IN EXCESS OF 1/4" SHALL BE BEVELED WITH A SLOPE NOT STEEPER THAN 1:2, IN COMPLIANCE WITH NFPA 101, SECTION 7.2.1.3.4.
4. SUBSTITUTIONS MUST MEET MINIMUM WIND DESIGN PRESSURES LISTED ON WIND UPLIFT DIAGRAMS FOUND ON STRUCTURAL DRAWINGS.
5. FRAME DIMENSIONS GIVEN TO OUTSIDE FACE.
6. REFER TO SPECIFICATIONS FOR VARIOUS GAUGE AND GALVANIZING REQUIREMENTS.
7. SEE FLOOR PLANS FOR DOOR NUMBER LOCATIONS, TYPE OF WALL CONSTRUCTION + "SWING SIDE."
8. REFER TO SPECIFICATION 08710 FOR DOOR HARDWARE GROUPS LISTED ON SCHEDULE.
9. REFER TO ROOM FINISH SCHEDULE TO DETERMINE ABUTTING FINISHES TO MTL. FRAMES.
10. THE APPROVAL OF ANSI A250.13 (2003) ALLOWS THE USE OF APPROVED (AND RATED) HARDWARE OR COMPONENTS OTHER THAN THOSE TESTED. THE USE OF SUBSTITUTE MAY MAINTAIN OR INCREASE THE RATING OF THE ASSEMBLY, BUT SHALL NOT DECREASE IT.

NOTE: CONTRACTOR TO VERIFY SIZE OF ALL EXISTING DOOR AND WINDOW OPENINGS.

NOTE: PROVIDE SHOP DRAWINGS FOR ALL DOORS & WINDOWS

DOOR TYPES

1/2" = 1'-0"

PERMIT SET

REVISIONS:		
NO.	DESCRIPTION	DATE
1	ADDENDUM 2	10/02/14

KEY WEST CITY HALL
AT GLYNN ARCHER
1300 WHITE STREET KEY WEST, FLORIDA
CITY OF KEY WEST

MCHARRYASSOCIATES
ARCHITECTURE / ENGINEERING / INTERIORS
AAC000986 EB0003663
2780 SW DOUGLAS ROAD, SUITE 302
MIAMI, FLORIDA 33133 (305)445-3765
WWW.MCHARRY.COM

410 Angela Street
Key West, Florida 33040
Telephone (305) 296-1347
Facsimilie (305) 296-2727
Florida License AAC002022
Bender & Associates ARCHITECTS p.a.

Project Nº: 1305

DOOR TYPES & DETAILS

Date: 8/8/14

A11.2

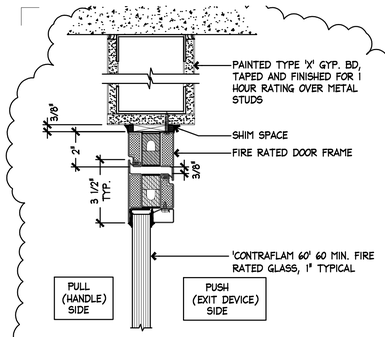

24 HEAD AT FIRE RATED STOREFRONT DOOR
A11.4 3" = 1'-0"

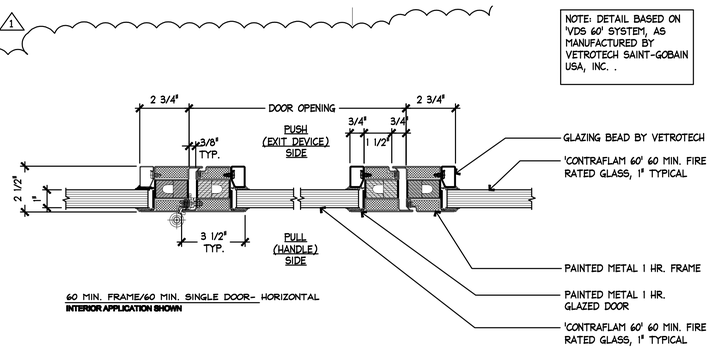

23 JAMB AT FIRE RATED STOREFRONT DOOR
A11.4 3" = 1'-0"

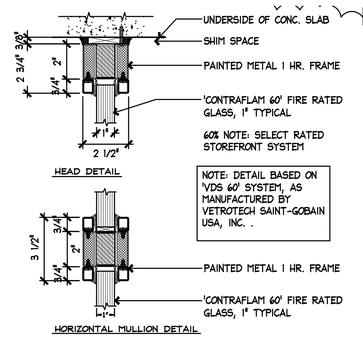

21 HEAD, HORIZ. MULLION AT FIRE RATED STOREFRONT
A11.4 3" = 1'-0"

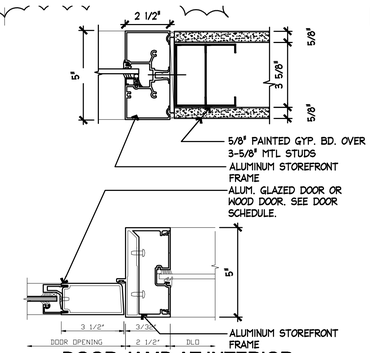

20 DOOR JAMB AT INTERIOR NON-RATED STOREFRONT
A11.4 3" = 1'-0"

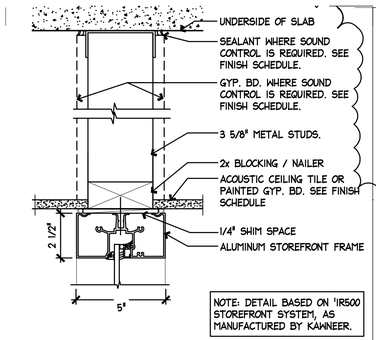

19 HEAD AT INTERIOR NON-RATED STOREFRONT
A11.4 3" = 1'-0"

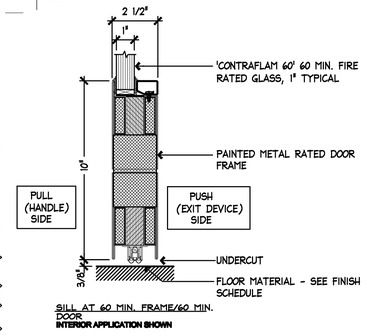

18 SILL AT FIRE RATED STOREFRONT DOOR
A11.4 3" = 1'-0"

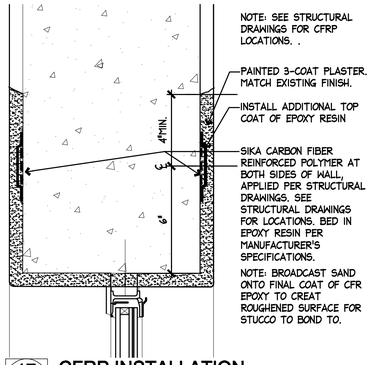

17 CFRP INSTALLATION
A11.4 3" = 1'-0"

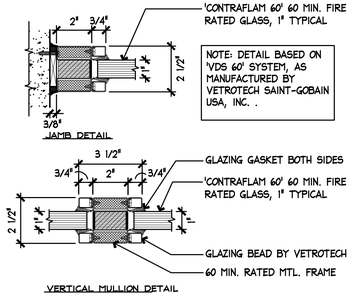

16 JAMB, VERTICAL MULLION AT FIRE RATED STOREFRONT
A11.4 3" = 1'-0"

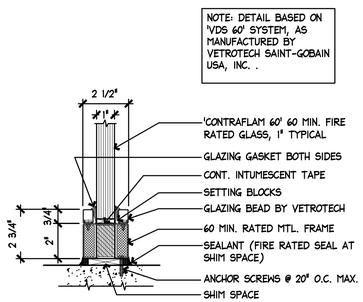

15 SILL AT FIRE RATED STOREFRONT
A11.4 3" = 1'-0"

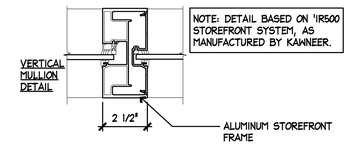

14 VERTICAL MULLION AT INTERIOR NON-RATED STOREFRONT
A11.4 3" = 1'-0"

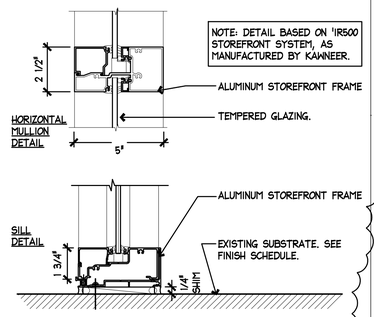

13 SILL AT INTERIOR NON-RATED STOREFRONT
A11.4 3" = 1'-0"

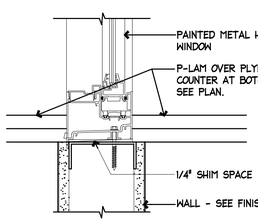

12 SILL @ INTERIOR PASS THRU WINDOW
A11.4 3" = 1'-0"

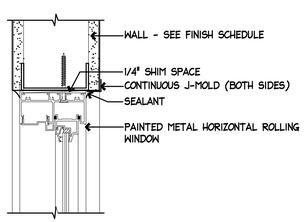

11 HEAD, JAMB @ INTERIOR PASS THRU WINDOW
A11.4 3" = 1'-0"

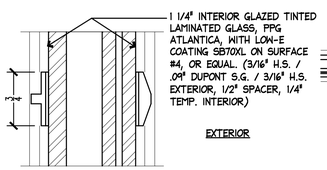

10 APPLIED MULLION AT HOPES WINDOW
A11.4 FULL SCALE

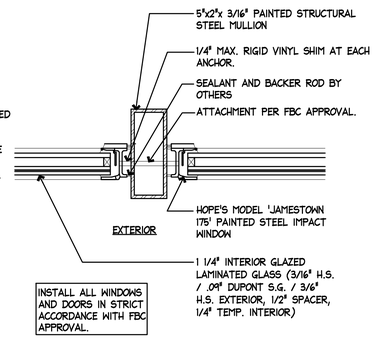

9 STRUCTURAL MULLION AT HOPES WINDOW
A11.4 3" = 1'-0"

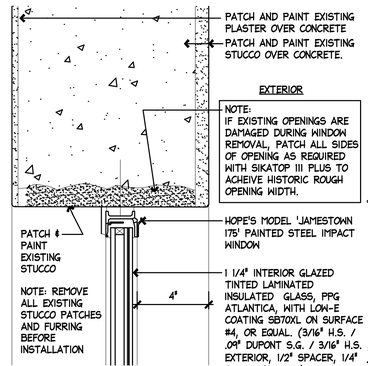

8 HEAD, JAMB AT HOPES WINDOW
A11.4 3" = 1'-0"

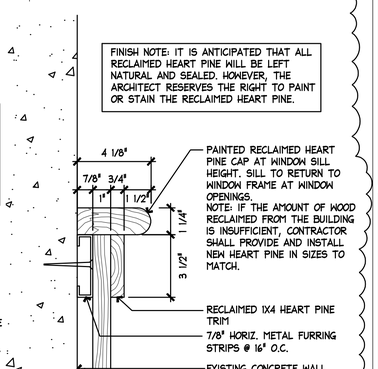

7 WAINSCOT TOP DETAIL
A11.4 3" = 1'-0"

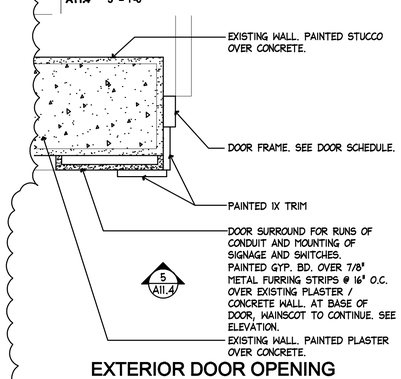

6 EXTERIOR DOOR OPENING PLAN DETAIL
A11 1 1/2"=1'-0"

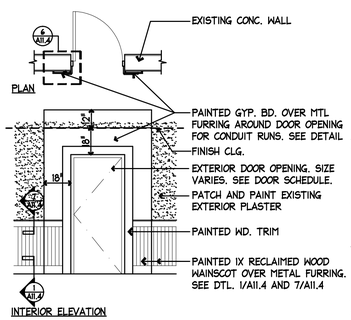

5 EXTERIOR DOOR OPENING ELEVATION
A11 1/4"=1'-0"

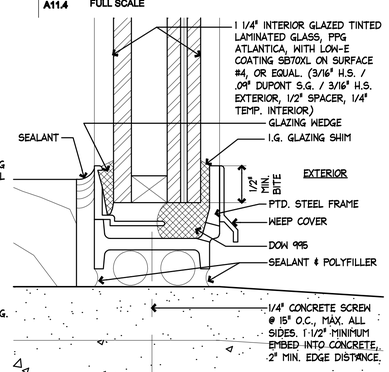

4 SILL AT HOPES WINDOW
A11.4 FULL SCALE

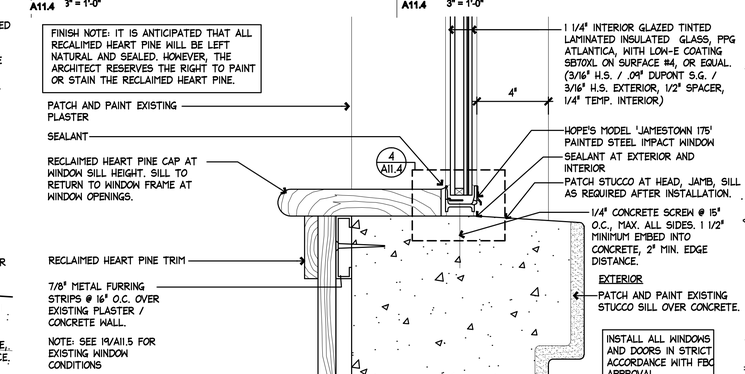

3 SILL AT HOPES WINDOW
A11.4 3" = 1'-0"

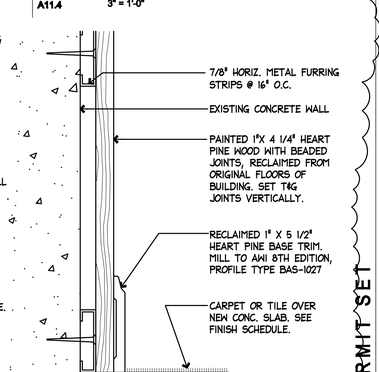

1 WAINSCOT BASE DETAIL
A11.4 3" = 1'-0"

PERMIT SET

REVISIONS:

NO.	DESCRIPTION	DATE
1	ADDENDUM 2	10/02/14

KEY WEST CITY HALL AT GLYNN ARCHER

1300 WHITE STREET KEY WEST, FLORIDA
CITY OF KEY WEST

MCHARRY ASSOCIATES
ARCHITECTURE / ENGINEERING / INTERIORS
AAC000986 EB0003663
2780 SW DOUGLAS ROAD, SUITE 302
MIAMI, FLORIDA 33133 (305)445-3765
WWW.MCHARRY.COM

410 Angela Street
Key West, Florida 33040
Telephone (305) 296-1347
Facsimilie (305) 296-2727
Florida License AAC002022

Bender & Associates ARCHITECTS p.a.

Project №: 1305
STOREFRONT DETAILS
WINDOW DETAILS
Date: 8/8/14

A11.4

16 PLASTER MEDALLIONS
N.T.S.

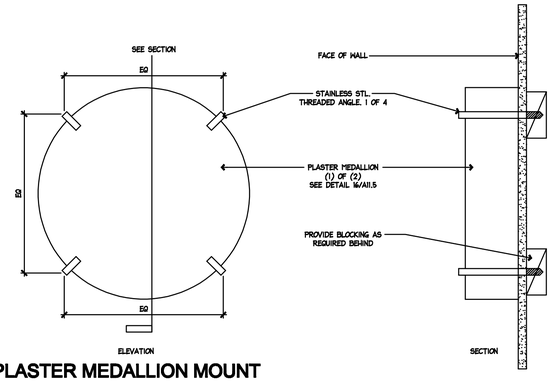

15 PLASTER MEDALLION MOUNT
N.T.S.

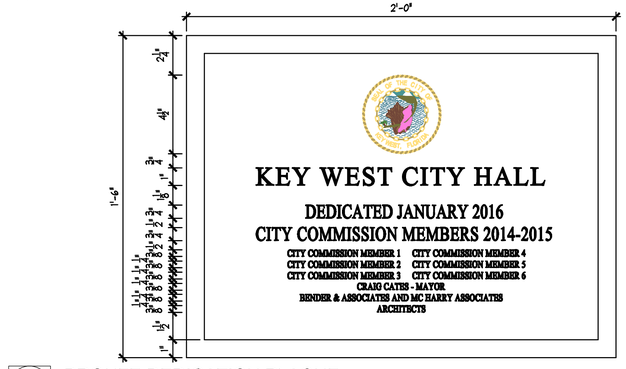

14 BRONZE DEDICATION PLAQUE
3" = 1'-0"

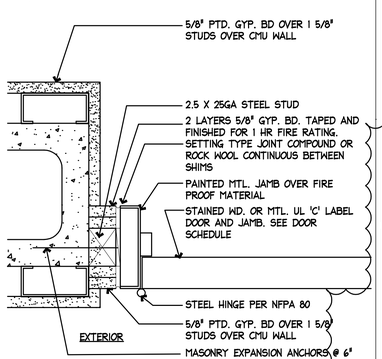

13 HEAD, JAMB @ RATED DOOR
A11.5 3" = 1'-0"

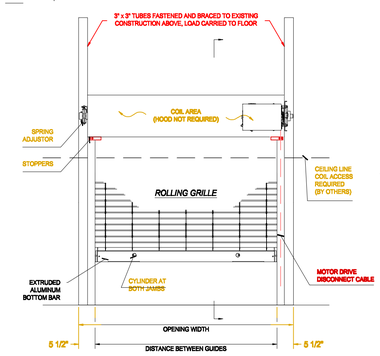

12 ELEVATION @ ROLLUP DOOR
1/2" = 1'-0"

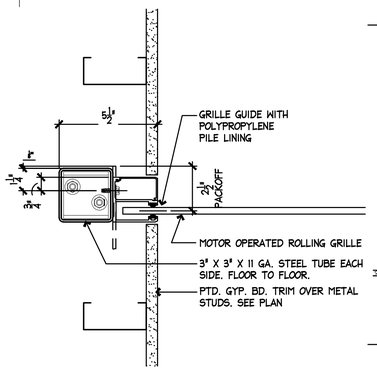

11 JAMB @ ROLLUP DOOR
3" = 1'-0"

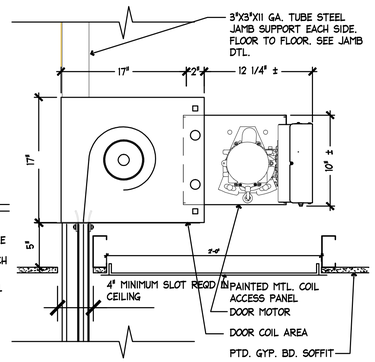

10 HEAD @ ROLLUP DOOR
1 1/2" = 1'-0"

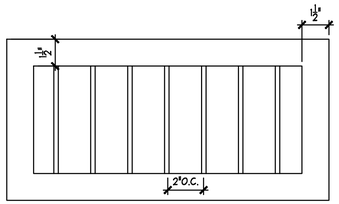

9 CRAWLSPACE VENT GRILLE ELEVATION
3" = 1'-0"

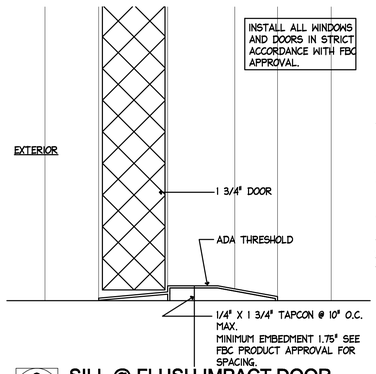

8 SILL @ FLUSH IMPACT DOOR
A11.5 6" = 1'-0"

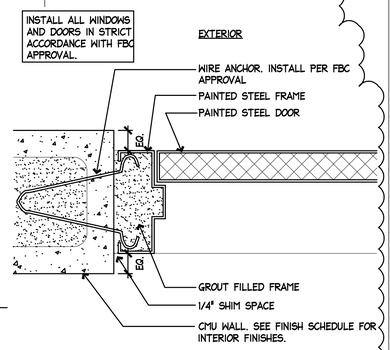

7 HEAD, JAMB @ FLUSH IMPACT DOOR
A11.5 3" = 1'-0"

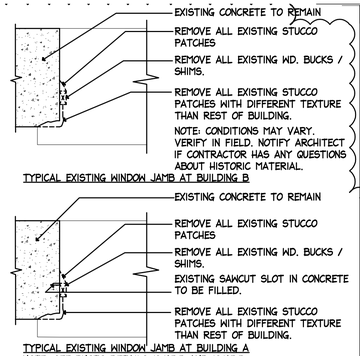

19 EXISTING WINDOW CONDITIONS
1 1/2" = 1'-0"

21 SILL AT BLIND DOOR
A11.5 3" = 1'-0"

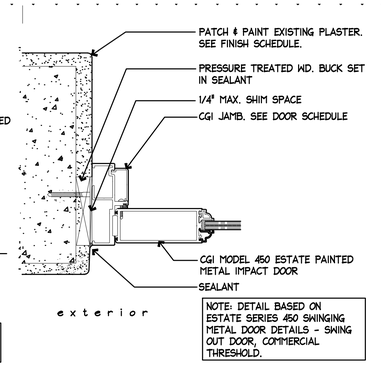

20 HEAD, JAMB AT BLIND DOOR
A11.5 3" = 1'-0"

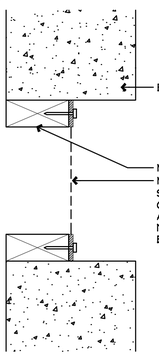

6 CRAWLSPACE VENT COVER
A11.5 3" - 1'-0"

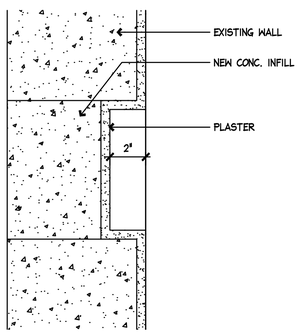

5 ATTIC VENT INFILL DETAIL
A11.5 3" - 1'-0"

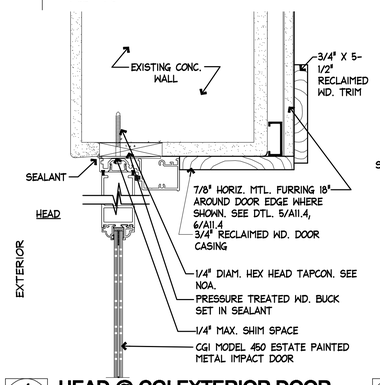

4 HEAD @ CGI EXTERIOR DOOR
A11.5 3" - 1'-0"

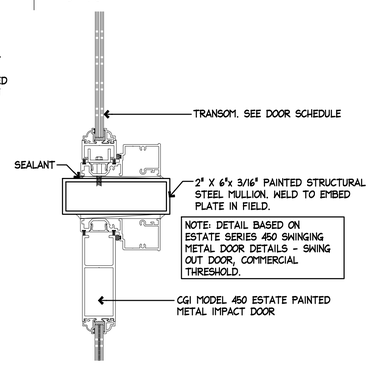

3 TRANSOM @ CGI EXTERIOR DOOR
A11.5 3" = 1'-0"

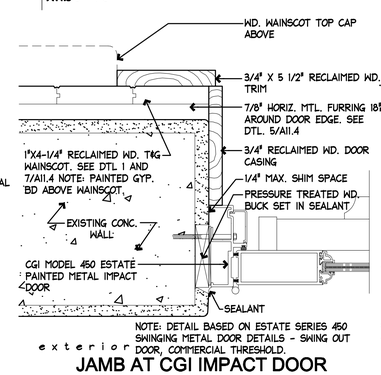

JAMB AT CGI IMPACT DOOR (FIXED SIDELITE SIMILAR)
A11.5 3" = 1'-0"

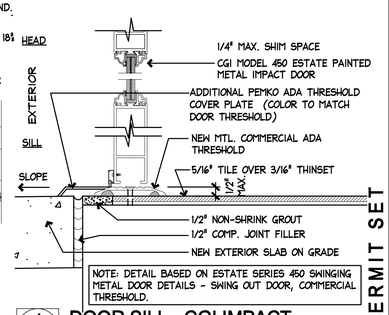

1 DOOR SILL - CGI IMPACT
A11.5 3" = 1'-0"

REVISIONS:

NO.	DESCRIPTION	DATE
1	ADDENDUM 2	10/02/14

KEY WEST CITY HALL
AT GLYNN ARCHER
1300 WHITE STREET KEY WEST, FLORIDA
CITY OF KEY WEST

MCHARRYASSOCIATES
ARCHITECTURE / ENGINEERING / INTERIORS
AAC000986 EB0003663
2780 SW DOUGLAS ROAD, SUITE 302
MIAMI, FLORIDA 33133 (305)445-3765
WWW.MCHARRY.COM

410 Angela Street
Key West, Florida 33040
Telephone (305) 296-1347
Facsimilie (305) 296-2727
Florida License AAC002022

Bender & Associates ARCHITECTS p.a.

Project No: 1305
DOOR DETAILS
Date: 8/8/14

PERMIT SET

A11.5

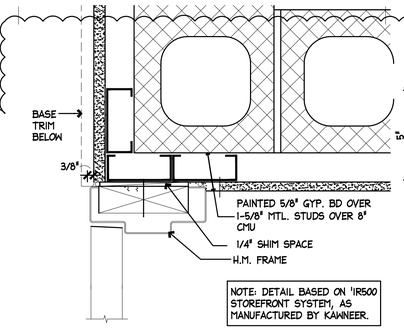

NOTE: DETAIL BASED ON 'IR500 STOREFRONT SYSTEM, AS MANUFACTURED BY KAWNEER.

21 H.M. JAMB @ CMU WALL
A11.10 3" = 1'-0"

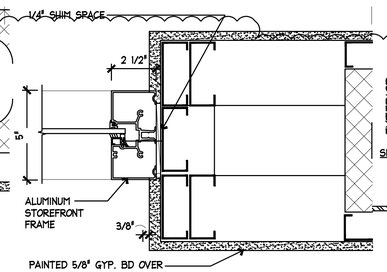

NOTE: DETAIL BASED ON 'IR500 STOREFRONT SYSTEM, AS MANUFACTURED BY KAWNEER.

20 HEAD, JAMB @ DOOR 231
A11.10 3" = 1'-0"

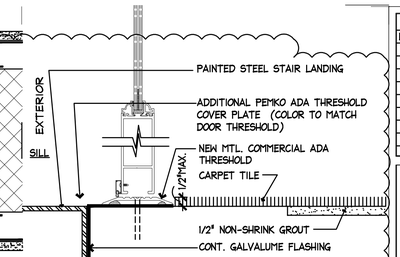

NOTE: DETAIL BASED ON ESTATE SERIES 450 SWINGING METAL DOOR DETAILS - SWING OUT DOOR, COMMERCIAL THRESHOLD.

19 CGI SILL AT 2ND FLOOR
A11.10 3" = 1'-0"

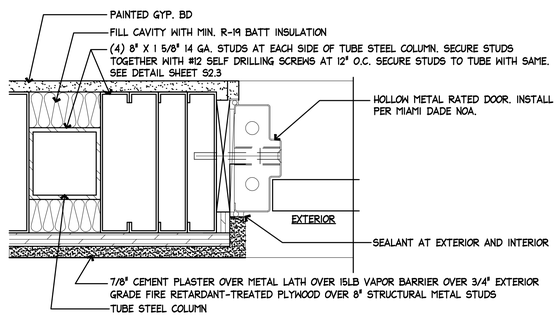

INSTALL ALL WINDOWS AND DOORS IN STRICT ACCORDANCE WITH MIAMI DADE NOA.

17 H.M. DOOR @ NEW MTL. FRAME WALL
A11.10 3" = 1'-0"

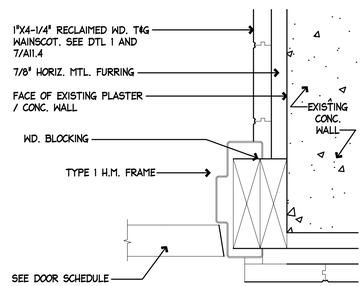

16 H.M. FRAME AT EXISTING WALL.
A11.10 3" = 1'-0"

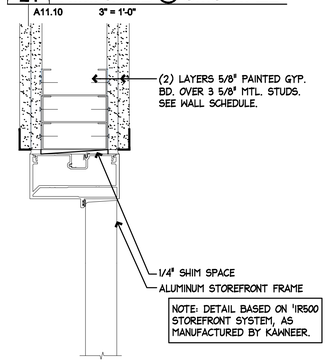

NOTE: DETAIL BASED ON 'IR500 STOREFRONT SYSTEM, AS MANUFACTURED BY KAWNEER.

15 JAMB AT 2-LAYER GWB WALL.
A11.10 3" = 1'-0"

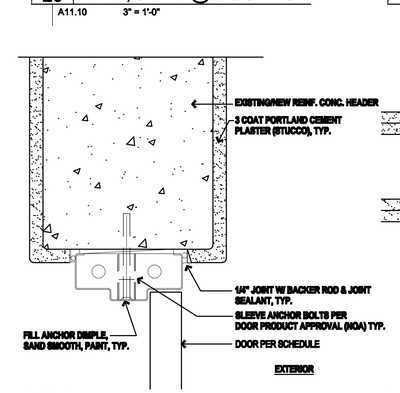

14 HEAD, JAMB AT EXISTING WALL
A11.10 3" = 1'-0"

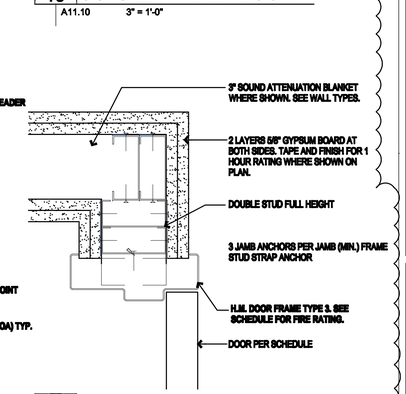

13 JAMB @ 2-LAYER GWB WALL
A11.10 3" = 1'-0"

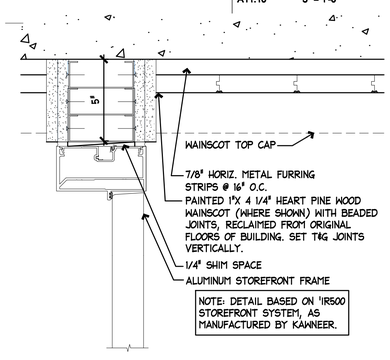

NOTE: DETAIL BASED ON 'IR500 STOREFRONT SYSTEM, AS MANUFACTURED BY KAWNEER.

12 JAMB @ RM 120
A11.10 3" = 1'-0"

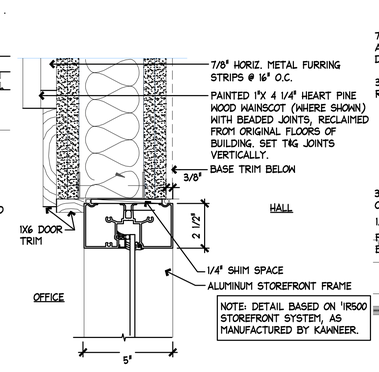

NOTE: DETAIL BASED ON 'IR500 STOREFRONT SYSTEM, AS MANUFACTURED BY KAWNEER.

11 JAMB @ RM 118
A11.10 3" = 1'-0"

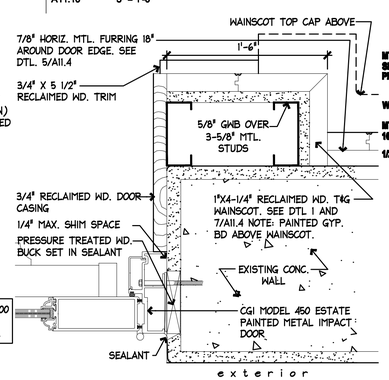

10 JAMB @ CGI EXTERIOR DOOR
A11.10 3" = 1'-0"

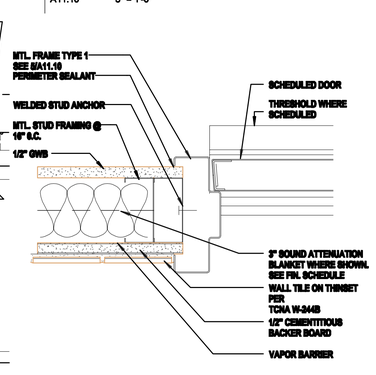

9 JAMB @ H.M. FRAME WITH TILE
A11.10 3" = 1'-0"

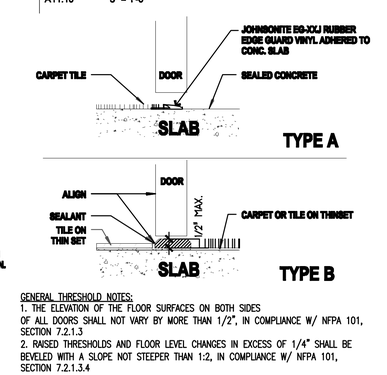

GENERAL THRESHOLD NOTES:
1. THE ELEVATION OF THE FLOOR SURFACES ON BOTH SIDES OF ALL DOORS SHALL NOT VARY BY MORE THAN 1/2", IN COMPLIANCE W/ NFPA 101, SECTION 7.2.1.3
2. RAISED THRESHOLDS AND FLOOR LEVEL CHANGES IN EXCESS OF 1/4" SHALL BE BEVELED WITH A SLOPE NOT STEEPER THAN 1:2, IN COMPLIANCE W/ NFPA 101, SECTION 7.2.1.3.4

8 INTERIOR THRESHOLDS
A11.10 3" = 1'-0"

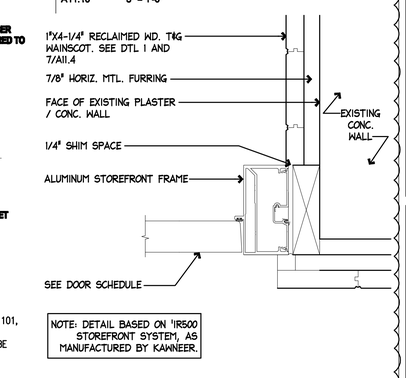

NOTE: DETAIL BASED ON 'IR500 STOREFRONT SYSTEM, AS MANUFACTURED BY KAWNEER.

7 JAMB @ STOREFRONT
A11.10 3" = 1'-0"

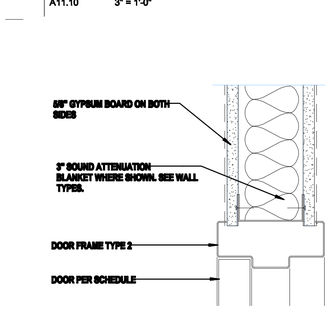

6 HEAD @ HOLLOW MTL FRAME
A11.10 3" = 1'-0"

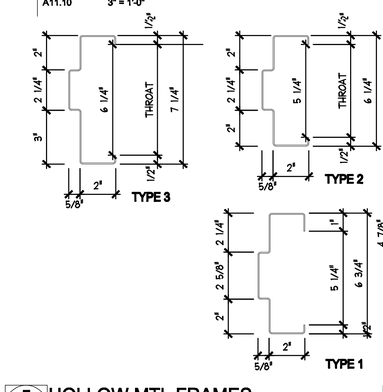

5 HOLLOW MTL FRAMES
A11.10 3" = 1'-0"

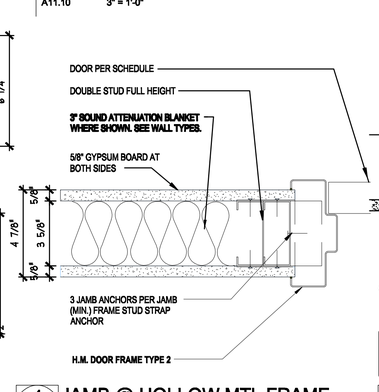

4 JAMB @ HOLLOW MTL FRAME
A11.10 3" = 1'-0"

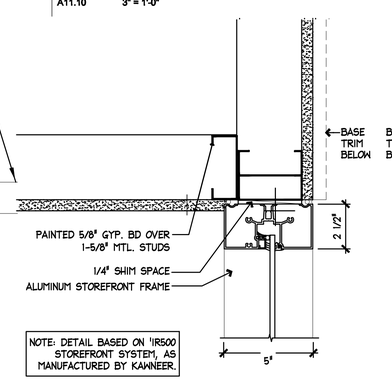

NOTE: DETAIL BASED ON 'IR500 STOREFRONT SYSTEM, AS MANUFACTURED BY KAWNEER.

3 STOREFRONT JAMB - GWB
A11.10 3" = 1'-0"

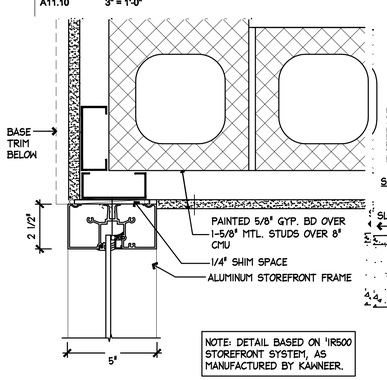

NOTE: DETAIL BASED ON 'IR500 STOREFRONT SYSTEM, AS MANUFACTURED BY KAWNEER.

2 STOREFRONT JAMB
A11.10 3" = 1'-0"

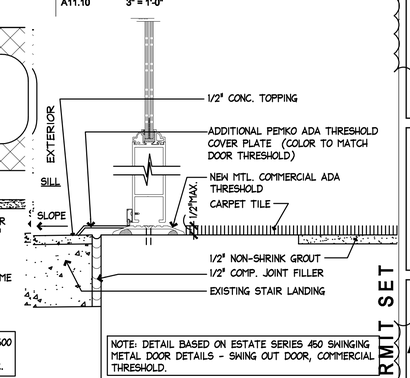

NOTE: DETAIL BASED ON ESTATE SERIES 450 SWINGING METAL DOOR DETAILS - SWING OUT DOOR, COMMERCIAL THRESHOLD.

1 DOOR SILL - CGI IMPACT - CARPET
A11.10 3" = 1'-0"

REVISIONS:

NO.	DESCRIPTION	DATE
1	ADDENDUM 2	10/02/14

KEY WEST CITY HALL AT GLYNN ARCHER

1300 WHITE STREET KEY WEST, FLORIDA
CITY OF KEY WEST

MCHARRYASSOCIATES
ARCHITECTURE / ENGINEERING / INTERIORS
AAC000986 EB0003663
2780 SW DOUGLAS ROAD, SUITE 302
MIAMI, FLORIDA 33133 (305)445-3765
WWW.MCHARRY.COM

410 Angela Street
Key West, Florida 33040
Telephone (305) 296-1347
Facsimilie (305) 296-2727
Florida License AAC002022

Bender & Associates ARCHITECTS p.a.

Project No: 1305
DETAILS
Date: 8/8/14

PERMIT SET

A11.10

NEW SHEET - ADDENDUM 2
OF

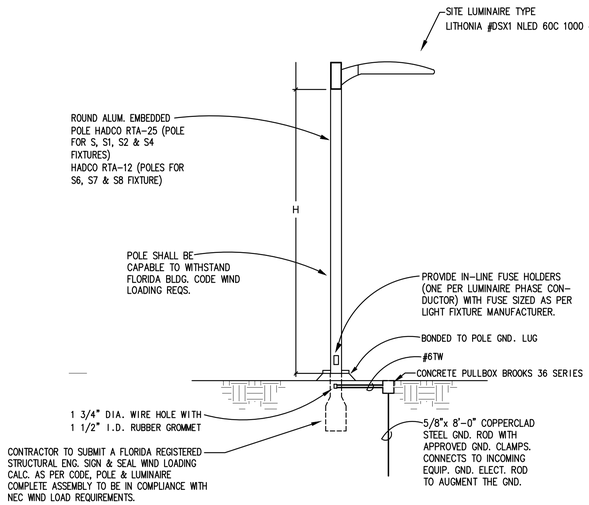

LTS TYPE	H
S	25'
S1	25'
S2	25'
S4	25'
S6	12'
S7	12'
S8	12'

SITE LUMINAIRE MOUNTING DETAIL 'SB'

N.T.S.

NOTES:

1) ELECTRICAL CONTRACTOR TO SUBMIT AS PART OF THE SHOP DRAWING SUBMITTAL SIGNED AND SEALED WIND LOADING CALCULATIONS BY A REGISTERED STATE OF FLORIDA STRUCTURAL ENGINEER OF THE POLE/BASE/LT. FIXTURE ASSEMBLY COMPLYING WITH FBC WIND LOADING REQUIREMENTS.
2) FINISH OF POLE/LUMINAIRE SHALL BE WHITE POWDER COAT FINISH. BEFORE PLACING ORDER, FINISH IS TO BE VERIFIED BY LANDSCAPE ARCHITECT.

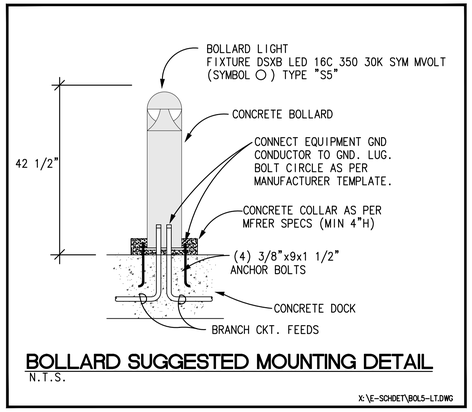

BOLLARD SUGGESTED MOUNTING DETAIL

N.T.S.

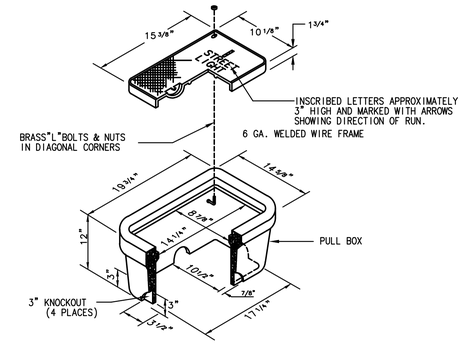

PULL BOX DETAIL

N.T.S.

PULL BOX SPECIFICATION

(1) PULL BOXES SHALL BE OPEN-BOTTOM PRECAST CLASS 1 CONCRETE WITH A MINIMUM COMPRESSIVE STRENGTH OF NOT LESS THAN 2,500 P.S.I. AFTER 28 DAYS. COVERS TO BE CAST IRON WITH NON-SLIP SURFACE & COATED WITH SHERWIN WILLIAMS KEN TRANSPORT ENAMEL, SUPER COACH BLACK FIB 4009 OR APPROVED EQUAL

(2) METAL COVER TO BE DRILLED FOR 1/4-20x 3/4" STAINLESS STEEL FLAT HEAD SCREW. ATTACH #6 CU. GND 36" LONG (CU. COMPRESSION TERMINAL END) WITH NUT AND LOCKWASHER. OTHER END OF PIGTAIL TO BE ATTACHED TO GND. ROD.

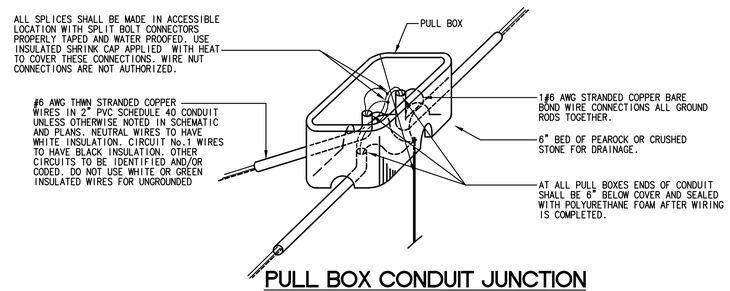

PULL BOX CONDUIT JUNCTION

N.T.S.

NOTES

1. SOLAR POWER MAIN DISCONNECT SWITCH
2. SOLAR POWER 400A., 208V, 3 PH LOCKABLE DISC. SW. MTD TO CARPORT TRUSS STRUCTURE WITH (9) 50A 208V. 3 PH CIRCUIT BREAKERS FED FROM SOLAR POWER INVERTERS. COORDINATE EXACT PLACEMENT WITH SOLAR CONSULTANT, ARCH. AND STRUCTURAL ENGINEER PRIOR TO ROUGH-IN.
3. DUAL STATION ELECTRIC CAR CHARGING STATION. EQUAL TO SEMA CONNECT CHARGE PRO 620.
4. SOLAR PANELS TO BE MOUNTED ON THE ROOF OF THE PARKING CANOPIES. THESE CANOPIES SHALL BE INCLUDED AS BASE BID.
5. KEY'S ENERGY METER PROVIDED AND INSTALLED BY KEYS ENERGY.
6. 3#600KCMIL IN 3 1/2"C TO SWBD SWA 400A, 480V 3 PHASE CIRCUIT BREAKER.
7. SOLAR POWER COMBINER AND INVERTER MOUNTED UP ABOVE IN CARPORT TRUSS STRUCTURE. COORDINATE EXACT PLACEMENT WITH SOLAR CONSULTANT, ARCH. AND STRUCTURAL ENGINEER PRIOR TO ROUGH-IN. (TYP. OF 3 SETS PER CARPORT)
8. 2 RUNS OF 3#3/0 KCMIL & 1#3/0 G IN 2"C EA TO 400A SOLAR POWER DISC. SW. MTD TO THE MAIN ELECTRICAL ROOM EXTERIOR WALL ADJACENT TO THE SOLAR POWER KWh METER. RUN CONDUIT EXPOSED STRAPPED TO CARPORT COLUMN PAINTED AS PER ARCH. DIRECTIONS.
9. SOLAR PANELS TO BE MOUNTED ON THE ROOF OF THE PARKING CANOPIES. THE CANOPY FURTHEST TO THE WEST SHALL BE PROVIDED AS AN ALTERNATE BID OPTION.
10. CISTERN PUMP STATION WITH 5HP, 208V, 3PH PUMP & CONTROL PANEL.
11. J. BOX FOR CONNECTION OF IRRIGATION CONTROLLER.
12. 2#6, 1#6 IN 2"C.
13. 4#6, 1#6 IN 2"C.
14. 6#6, 1#6 IN 2"C.
15. 2#8, 1#8 IN 2"C.
16. 6#6, 2#8 & 1#6G IN 2"C.
17. ELEC. CHASE IN 1st FLOOR ROOM 125. REFER TO SHEET E2.1A FOR CONTINUATION.
18. RUN 3/4"C UP TO SERVER ROOM FOR MONITORING/METERING CABLING REQUIREMENTS.

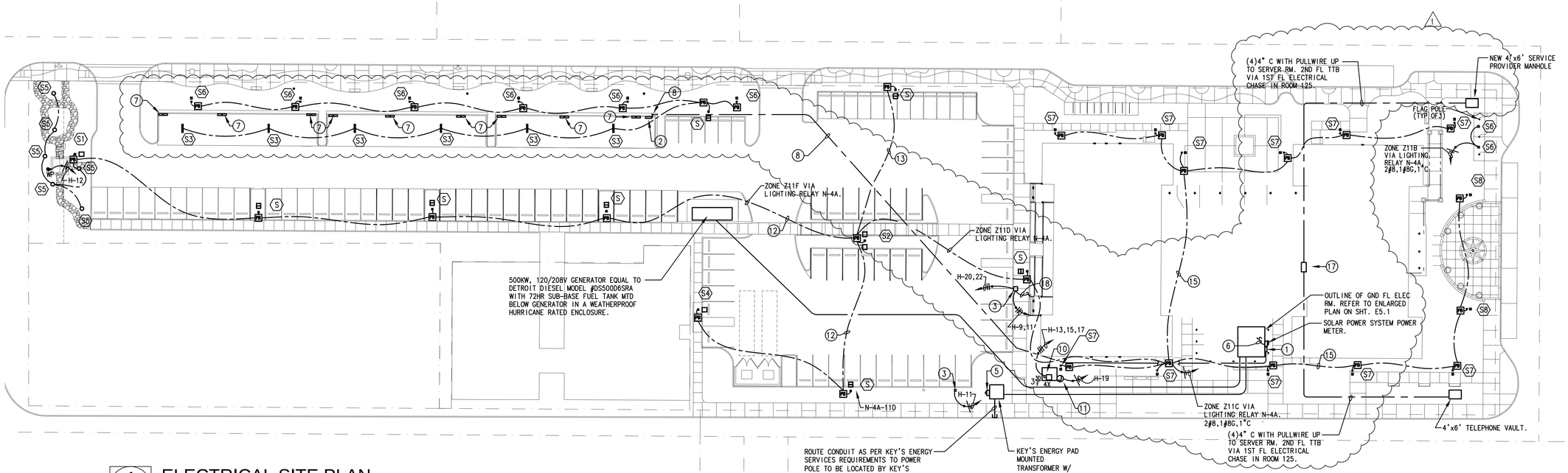

1 ELECTRICAL SITE PLAN

E1.1 1" = 30'-0"

REVISIONS:

NO.	DESCRIPTION	DATE
1	ADDENDUM 2	10/02/14

KEY WEST CITY HALL AT GLYNN ARCHER

PHASE 2

1300 WHITE STREET KEY WEST, FLORIDA

CITY OF KEY WEST

ANTHONY A. SCHULZ LICENSE No 60762 STATE OF FLORIDA PROFESSIONAL ENGINEER

ANTHONY A. SCHULZ, P.E. (ELECTRICAL)
FL REG. #0060762

M.E.P.FP. ENGINEER:

HINGS ENGINEERS

HUFSEY, NICOLAIDES, GARCIA , SUAREZ CONSULTING ENGINEERS
4800 S.W. 74th Court Miami, Florida 33155
(305) 270-9935 Fax (305) 666-5891
HINGS # 13-0016

ENRIQUE J. SUAREZ, P.E. (MECHANICAL)
FL REG.#0015794

CARLOS GARCIA, P.E. (ELECTRICAL)
FL REG.#0014104

410 Angela Street
Key West, Florida 33040
Telephone (305) 296-1347
Facsimilie (305) 296-2727
Florida License AAC002022

Bender & Associates ARCHITECTS p.a.

Project N.º 1305

ELECTRICAL SITE PLAN

Date: 8/8/14

PERMIT SET

E1.1

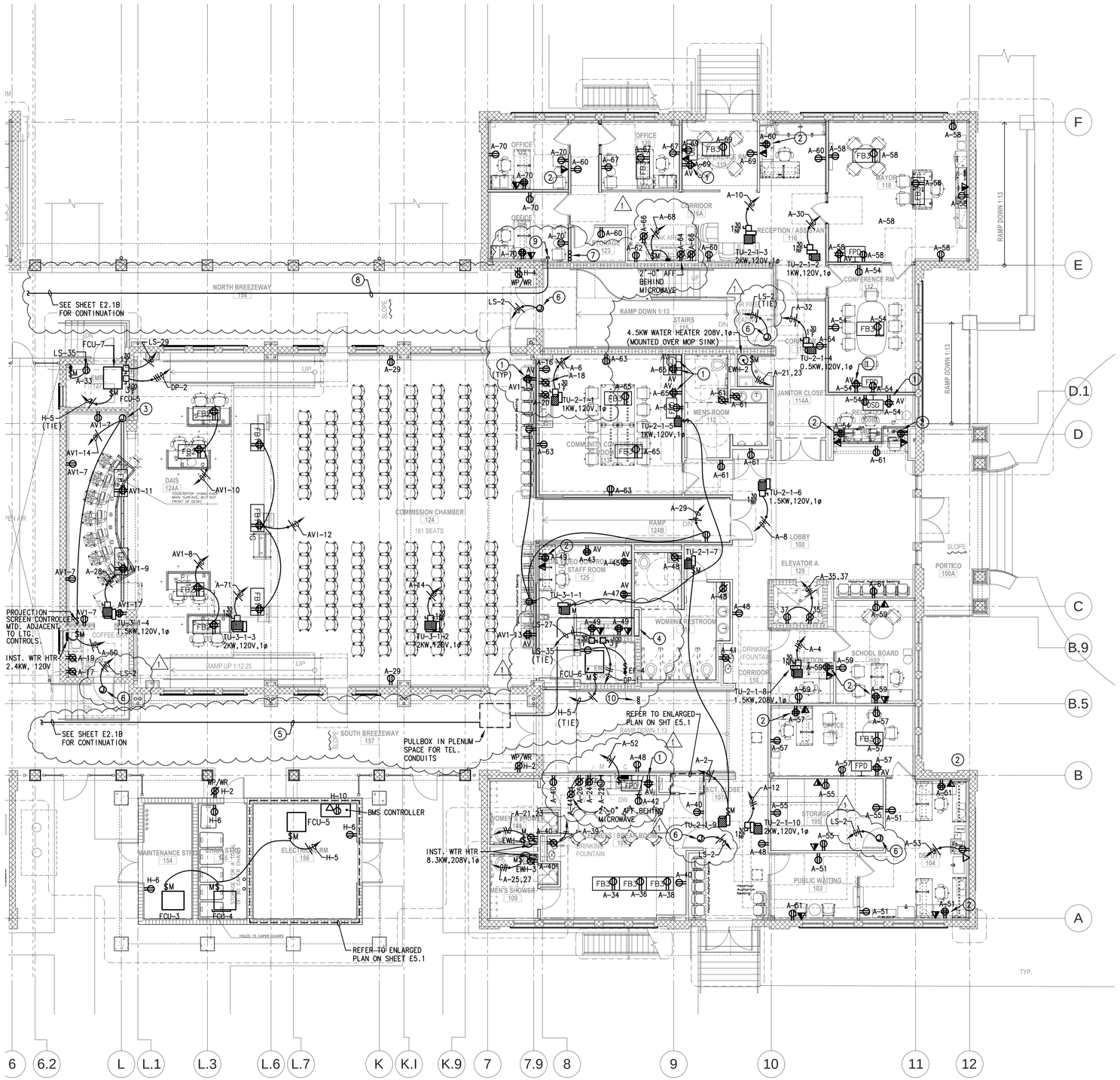

1 1st FLOOR POWER PLAN - WING A

E2.1A

1/8" = 1'-0"

CODED NOTES

1. FOR AV EQUIPMENT OUTLET MTG. HEIGHT REFER TO AV DRAWING. AV OUTLET DENOTED WITH AN 'AV' ADJACENT TO OUTLET.
2. REC & TEL/DATA OUTLETS TO BE MOUNTED AT 30"AFF.
3. J. BOX FOR MOTORIZED PROJECTION SCREEN.
4. (8) 4"C W/PULLSTRING ROUTED IN CHASE FROM SITE PULLBOXES. SEE SHEET E1.1 FOR CONTINUATION.
5. ROUTE (8)4"C IN BREEZEWAY CLG. SPACE FOR TEL. DEMARCATION.
6. J.BOX FOR DOOR LOCKS.
7. (3)2" CONDUIT STUB W/BUSHINGS UP TO 2nd FLOOR CLG. SPACE FOR TEL./DATA CABLING.
8. (1)4"C W/PULLWIRE FOR TEL/DATA CABLING BETWEEN WING A & WIN B. SEE SHEET E2.1B FOR CONTINUATION.
9. STUB CONDUIT W/BUSHINGS IN 1st FL CLG. SPACE.
10. (3)4"C W/BUSHINGS STUB DOWN FROM 2nd FL FOR TEL./DATA CABLING.

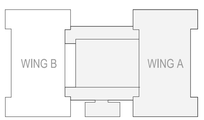

KEY PLAN WING A
1" = 80'-0"

REVISIONS:		
NO.	DESCRIPTION	DATE
1	ADDENDUM 2	10/02/14

KEY WEST CITY HALL AT GLYNN ARCHER

PHASE 2

1300 WHITE STREET KEY WEST, FLORIDA

CITY OF KEY WEST

ANTHONY A. SCHULZ LICENSE No 60762 STATE OF FLORIDA PROFESSIONAL ENGINEER

ANTHONY A. SCHULZ, P.E. (ELECTRICAL)
FL REG. #0060762

M.E.P.FP. ENGINEER:

HNTGS ENGINEERS

HUFSEY, NICOLAIDES, GARCIA , SUAREZ CONSULTING ENGINEERS
4800 S.W. 74th Court Miami, Florida 33155
(305) 270-9935 Fax (305) 666-5891
HNGS # 13-0016

- ENRIQUE J. SUAREZ, P.E. (MECHANICAL) FL REG.#0015794
- CARLOS GARCIA, P.E. (ELECTRICAL) FL REG.#0014104

410 Angela Street
Key West, Florida 33040
Telephone (305) 296-1347
Facsimilie (305) 296-2727
Florida License AAC002022

Bender & Associates ARCHITECTS p.a.

Project N.º 1305

1ST FLOOR POWER PLAN - WNG A

Date: 8/8/14

PERMIT SET

E2.1A

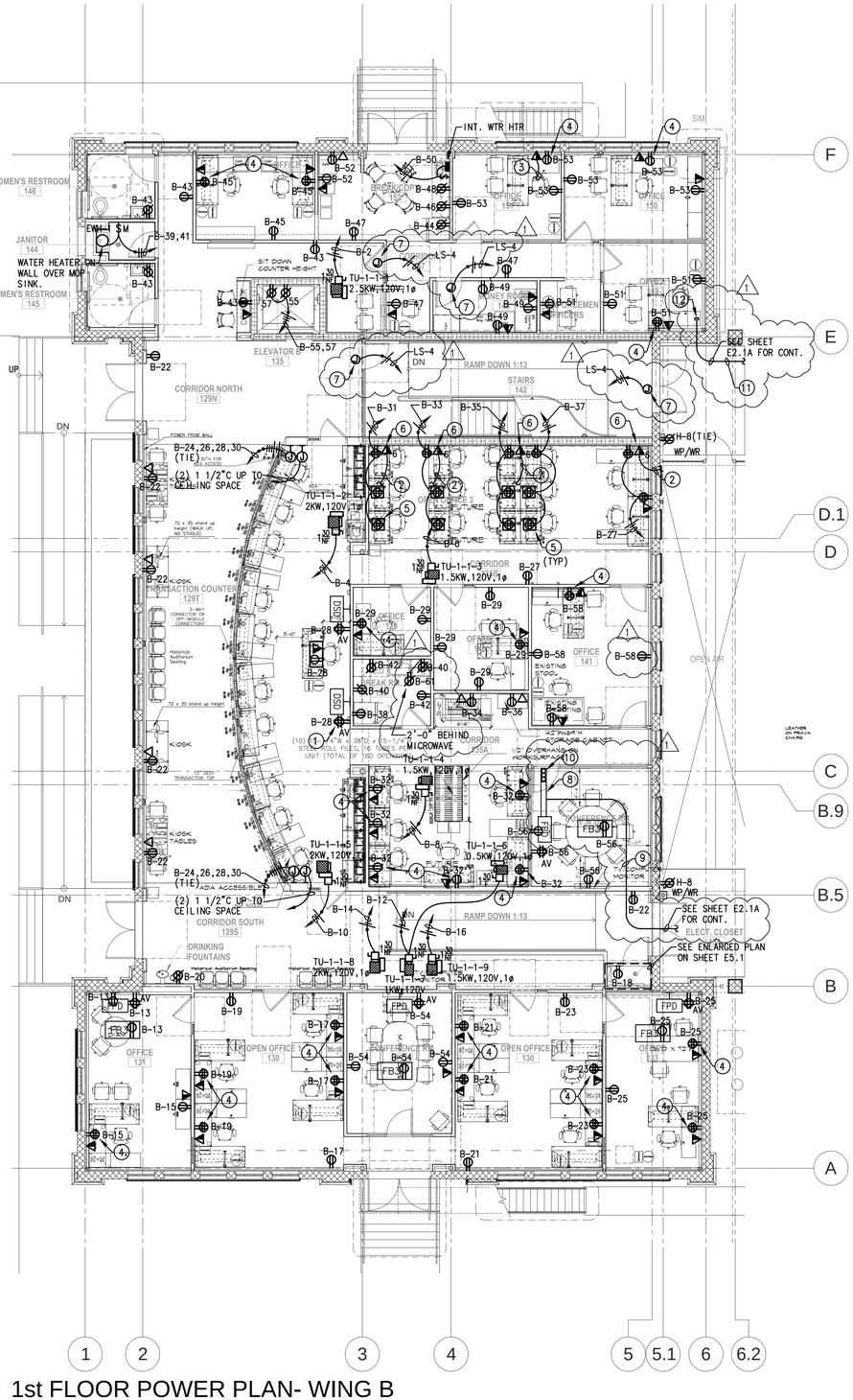

1 1st FLOOR POWER PLAN- WING B

E2.1B

1/8" = 1'-0"

CODED NOTES:

1. REFER TO AV DRAWINGS FOR EXACT MTG HEIGHT OF AV EQUIPMENT RECEPT. DENOTED WITH AN 'AV'.
2. 1"C TO CLG. SPACE.
3. 3/4"C TO CLG. SPACE TYP. ALL TEL, DATA, COMB. OUTLET U.O.N.
4. REC AND TEL/DATA OUTLETS TO BE MOUNTED AT 30"AFF.
5. 2 GANG FLOOR BOX EQUAL TO WIREMOLD W/ BRASS COVER PLATE & (2) DUPLEX RECEPT.
6. DATA OUTLET W/ 6 JACKS.
7. J.BOX FOR DOOR LOCK.
8. STUB (8)4"C W/PULLWIRE UP TO SERVER ROOM ABOVE. COORDINATE EXACT LOCATION AND ROUTING W/ IT DRAWINGS.
9. (8)4"C W/PULLWIRE FOR TEL. DEMARCATION ROUTED IN CLG. SPACE. SEE SHEET E2.1A & IT DRAWINGS FOR CONTINUATION.
10. (3)4"C SLEEVES W/CONDUIT BUSHING STUBBED DOWN FROM SERVER ROOM.
11. (1)4"C W/PULLWIRE FOR TEL/DATA CABLING ROUTED IN CLG. SPACE.
12. STUB CONDUIT W/BUSHING IN WING B CLG. SPACE.

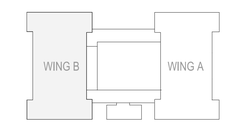

KEY PLAN WING B
1" = 80'-0"

REVISIONS:

NO.	DESCRIPTION	DATE
1	ADDENDUM 2	10/02/14

KEY WEST CITY HALL AT GLYNN ARCHER

PHASE 2

1300 WHITE STREET KEY WEST, FLORIDA

CITY OF KEY WEST

ANTHONY A. SCHULZ LICENSE No 60762 STATE OF FLORIDA PROFESSIONAL ENGINEER

ANTHONY A. SCHULZ P.E. (ELECTRICAL)
FL REG. #0060762

M.E.P.FP. ENGINEER:

HNYGS ENGINEERS

HUFSEY, NICOLADES, GARCIA, SUAREZ CONSULTING ENGINEERS
4800 S.W. 74th Court Miami, Florida 33155
(305) 270-9935 Fax (305) 666-5891
HNGS # 13-0016

- ENRIQUE J. SUAREZ, P.E. (MECHANICAL) FL REG.#0015794
- CARLOS GARCIA, P.E. (ELECTRICAL) FL REG.#0034324

410 Angela Street
Key West, Florida 33040
Telephone (305) 296-1347
Facsimilie (305) 296-2727
Florida License AAC002022

Bender & Associates ARCHITECTS p.a.

Project N.º 1305

1ST FLOOR POWER PLAN - WING B

Date: 8/8/14

PERMIT SET

E2.1B

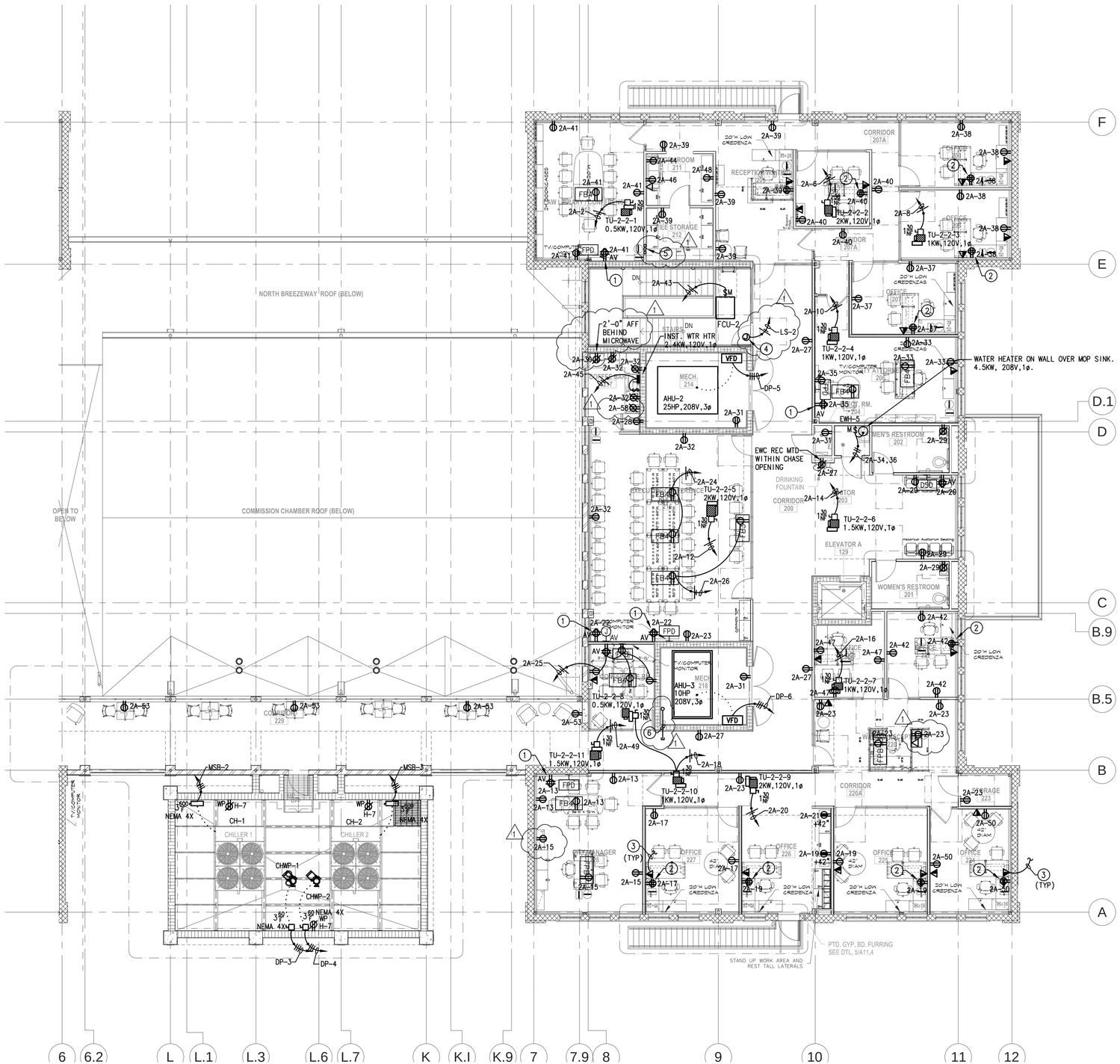

1 2ND FLOOR ELECTRICAL PLAN - WING A

E2.2A

1/8" = 1'-0"

CODED NOTES

1. FOR AV EQUIPMENT OUTLET MTG. HEIGHT REFER TO AV DRAWING. AV OUTLET DENOTED WITH AN 'AV' ADJACENT TO OUTLET.
2. REC & TEL/DATA OUTLETS TO BE MTD @ 30" AFF.
3. 3/4"C W/PULLSTRING UP TO CLG. SPACE (TYP. ALL TEL. & DATA OUTLETS U.O.N.)
4. J.BOX FOR DOOR LOCKS.
5. (3)2"C W/BUSHINGS STUB DOWN TO 1st FL CLG SPACE FOR TEL./DATA CABLING. SEE SHEET E2.1A FOR CONTINUATION.
6. (3)4"C STUB INTO CLG. SPACE W/BUSHING FOR TEL./DATA CABLING FROM 1st FL.

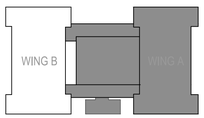

KEY PLAN WING A
1" = 80'-0"

REVISIONS:

NO.	DESCRIPTION	DATE
1	ADDENDUM 2	10/02/14

KEY WEST CITY HALL AT GLYNN ARCHER

PHASE 2

1300 WHITE STREET KEY WEST, FLORIDA

CITY OF KEY WEST

ANTHONY A. SCHULZ LICENSE No 60762 STATE OF FLORIDA PROFESSIONAL ENGINEER

ANTHONY A. SCHULZ P.E. (ELECTRICAL)
FL REG. #0060762

M.E.P.FP. ENGINEER:

HNTGS ENGINEERS

HUFSEY, NICOLAIDES, GARCIA , SUAREZ CONSULTING ENGINEERS
4000 Ponce de Leon Blvd. Miami, Florida 33155
(305) 370-9935 Fax (305) 666-5893
HNGS # 13-0016

- ENRIQUE J. SUAREZ, P.E. (MECHANICAL) FL REG.#0054154
- CARLOS GARCIA, P.E. (ELECTRICAL) FL REG.#0054324

410 Angela Street
Key West, Florida 33040
Telephone (305) 296-1347
Facsimilie (305) 296-2727
Florida License AAC002022

Bender & Associates ARCHITECTS p.a.

Project N.º 1305

2ND FLOOR ELECTRICAL PLAN - WING A

Date: 8/8/14

PERMIT SET

E2.2A

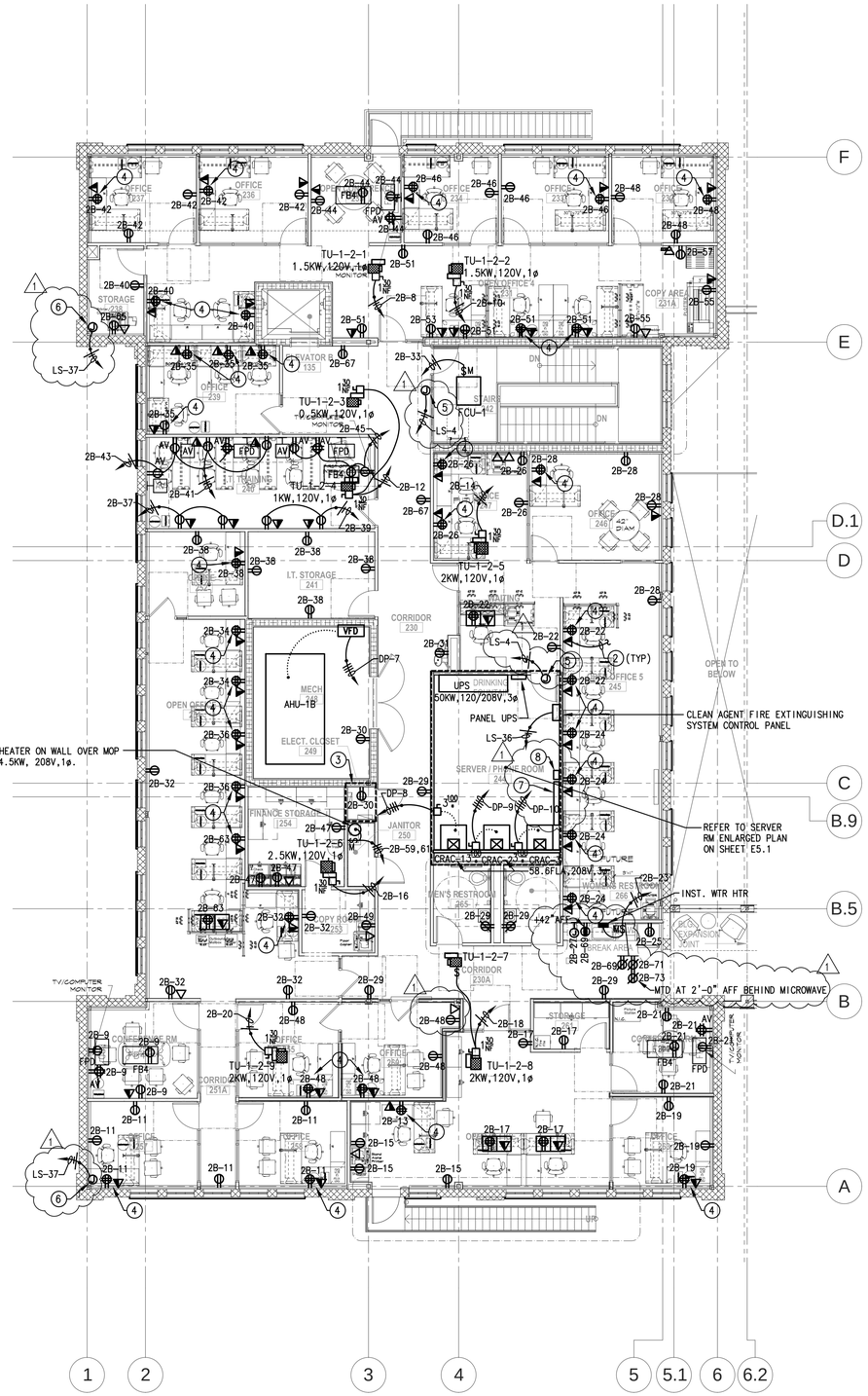

1 2ND FLOOR POWER PLAN - WING B

E2.2B

1/8" = 1'-0"

CODED NOTES:

1. REFER TO AV DRAWINGS FOR EXACT MTG HEIGHT OF AV EQUIPMENT RECEPT. DENOTED WITH AN 'AV'.
2. 3/4"C TO CLG. SPACE.
3. REFER TO ENLARGED PLAN ON SHEET E5.1.
4. REC, TEL AND DATA OUTLETS TO BE MOUNTED AT 30"AFF.
5. J.BOX FOR DOOR LOCKS.
6. J.BOX IN CLG SPACE FOR PTZ CAMERA.
7. (8)4"C STUB UP FROM 1st FOR TEL. DEMARCATION.
8. (3)4"C SLEEVE STUB W/BUSHING FROM 1st FL FOR CABLE DISTRIBUTION.

NOTES:

REFER TO EAV, AV & TI SERIES DRAWINGS FOR ADDITIONAL BOX SIZE AND SPECIFICATIONS, CONDUIT REQUIREMENTS. E.C. TO FURNISH & INSTALL ALL BOXES INDICATED IN THESE DRAWINGS.

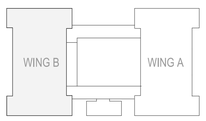

KEY PLAN WING B
1" = 80'-0"

REVISIONS:

NO.	DESCRIPTION	DATE
1	ADDENDUM 2	10/02/14

KEY WEST CITY HALL AT GLYNN ARCHER

PHASE 2

1300 WHITE STREET KEY WEST, FLORIDA

CITY OF KEY WEST

ANTHONY A. SCHULZ LICENSE No 60762 STATE OF FLORIDA PROFESSIONAL ENGINEER

ANTHONY A. SCHULZ P.E. (ELECTRICAL)
FL REG. #0060762

M.E.P.FP. ENGINEER:

HNGS ENGINEERS

HUFSEY, NICOLAIDES, GARCIA , SUAREZ CONSULTING ENGINEERS
4800 S.W. 74th Court Miami, Florida 33155
(305) 270-9935 Fax (305) 666-5893
HNGS # 13-0016

- ENRIQUE J. SUAREZ, P.E. (MECHANICAL) FL REG.#0016794
- CARLOS GARCIA, P.E. (ELECTRICAL) FL REG.#0014324

410 Angela Street
Key West, Florida 33040
Telephone (305) 296-1347
Facsimilie (305) 296-2727
Florida License AAC002022

Bender & Associates ARCHITECTS p.a.

Project N º 1305

2ND FLOOR POWER PLAN - WING B

Date: 8/8/14

PERMIT SET

E2.2B

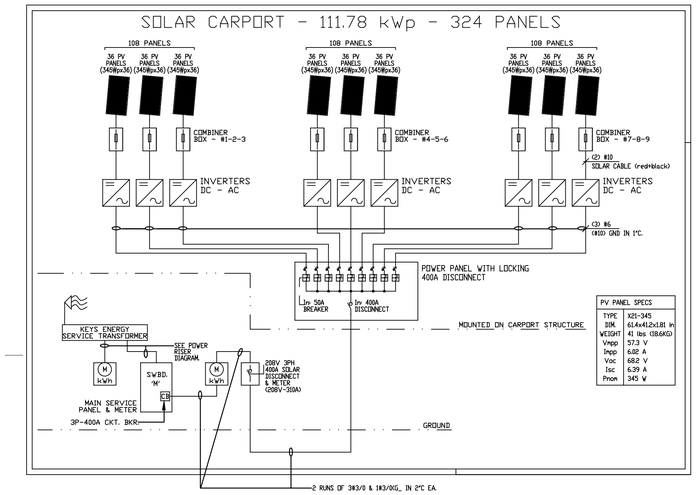

SOLAR POWER RISER DIAGRAM

N.T.S.

NOTE: SOLAR POWER RISER PROVIDED AND DESIGNED BY SOLAR POWER CONSULTANT.

COPPER FEEDER SCHEDULE

AMPERE RATING	FEEDER DESIGN	3PH, 4W, (A)				3PH, 3W, (B)				1PH, 3W, (C)				1PH, 2W, (D)			
A		RUNS	C	CONDUCTORS	G	RUNS	C	CONDUCTORS	G	RUNS	C	CONDUCTORS	G	RUNS	C	CONDUCTORS	G
20	0.2	1	1/2	4#12	12	1	1/2	3#12	12	1	1/2	3#12	12	1	1/2	2#12	12
30	0.3	1	3/4	4#10	10	1	1/2	3#10	10	1	1/2	3#10	10	1	1/2	2#10	10
40	0.4	1	1	4#8	10	1	3/4	3#8	10	1	3/4	3#8	10	1	3/4	2#8	10
50	0.5	1	1-1/4	4#6	10	1	1	3#6	10	1	1	3#6	10	1	1	2#6	10
60	0.6	1	1-1/4	4#6	10	1	1	3#6	10	1	1	3#6	10	1	1	2#6	10
70	0.7	1	1-1/4	4#4	8	1	1-1/4	3#4	8	1	1-1/4	3#4	8	1	1	2#4	8
80	0.8	1	1-1/2	4#3	8	1	1-1/4	3#3	8	1	1-1/4	3#3	8	1	1-1/4	2#3	8
90	0.9	1	1-1/2	4#3	8	1	1-1/4	3#3	8	1	1-1/4	3#3	8	1	1-1/4	2#3	8
100	1	1	1-1/2	4#2	8	1	1-1/4	3#2	8	1	1-1/4	3#2	8	1	1-1/4	2#2	8
125	1.2	1	2	4#1	6	1	1-1/2	3#1	6	1	1-1/2	3#1	6	1	1-1/4	2#1	6
150	1.5	1	2	4#1/0	6	1	2	3#1/0	6	1	2	3#1/0	6	1	1-1/2	2#1/0	6
175	1.7	1	2	4#2/0	6	1	2	3#2/0	6	1	2	3#2/0	6	1	1-1/2	2#2/0	6
200	2	1	2-1/2	4#3/0	6	1	2	3#3/0	6	1	2	3#3/0	6	1	2	2#3/0	6
225	2.2	1	2-1/2	4#4/0	4	1	2-1/2	3#4/0	4	1	2-1/2	3#4/0	4	1	2	2#4/0	4
250	2.5	1	3	4#250MCM	4	1	2-1/2	3#250MCM	4	1	2-1/2	3#250MCM	4	1	2-1/2	2#250MCM	4
300	3	1	3	4#350MCM	4	1	3	3#350MCM	4	1	3	3#350MCM	4	1	2-1/2	2#350MCM	4
350	3.5	1	3-1/2	4#400MCM	3	1	3	3#400MCM	3	1	3	3#400MCM	3	1	3	3#400MCM	3
400	4	1	3-1/2	4#500MCM	3	1	3-1/2	3#500MCM	3	1	3-1/2	3#500MCM	3	1	3	2#500MCM	3
500	5	2	3	4#250MCM	2	2	2-1/2	3#250MCM	2	2	2-1/2	3#250MCM	2	--	--	--	--
600	6	2	3	4#350MCM	1	2	3	3#350MCM	1	2	3	3#350MCM	1	--	--	--	--
700	7	2	3-1/2	4#500MCM	1/0	2	3-1/2	3#500MCM	1/0	2	3-1/2	3#500MCM	1/0	--	--	--	--
800	8	3	3	4#300MCM	1/0	3	3	3#300MCM	1/0	3	3	3#300MCM	1/0	--	--	--	--
900	9	3	3	4#350MCM	2/0	3	3	3#350MCM	2/0	3	3	3#350MCM	2/0	--	--	--	--
1000	10	3	3-1/2	4#400MCM	2/0	3	3	3#400MCM	2/0	3	3	3#400MCM	2/0	--	--	--	--
1100	11	3	3-1/2	4#500MCM	3/0	3	3-1/2	3#500MCM	3/0	3	3-1/2	3#500MCM	3/0	--	--	--	--
1200	12	4	3	4#350MCM	3/0	4	3	3#350MCM	3/0	4	3	3#350MCM	3/0	--	--	--	--
1600	16	4	4	4#600MCM	4/0	5	3	3#400MCM	4/0	5	3	3#400MCM	4/0	--	--	--	--
3000	30	7	3-1/2	4#600MCM	400	-	-	-	-	-	-	-	-	--	--	--	--
2000	20	5	3-1/2	4#600MCM	250	-	-	-	-	-	-	-	-	--	--	--	--
2500	25	6	3-1/2	4#600MCM	350	-	-										

NOTE: FEEDER DESIGNATION CONSISTS OF NUMBER AND LETTER EXAMPLE: 0.7A CONSISTS OF 3PH 4W FEEDER RATED @ 70A: 0.7B CONSISTS OF 3PH., 3W FEEDER RATED @70A.

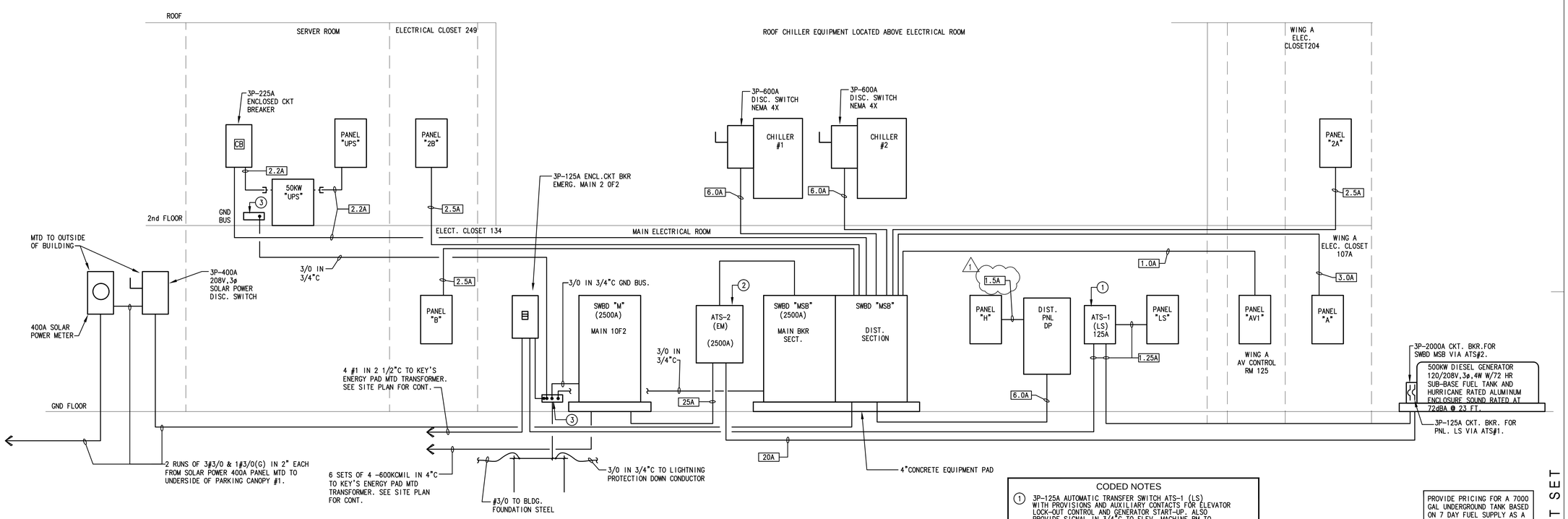

POWER RISER DIAGRAM

N.T.S.

CODED NOTES

1. 3P-125A AUTOMATIC TRANSFER SWITCH ATS-1 (LS) WITH PROVISIONS AND AUXILIARY CONTACTS FOR ELEVATOR LOCK-OUT CONTROL AND GENERATOR START-UP. ALSO PROVIDE SIGNAL IN 3/4"C TO ELEV. MACHINE RM TO INDICATE THAT ELEVATORS ARE CONNECTED TO GENERATOR POWER.
2. 3P-2500A AUTOMATIC TRANSFER SWITCH ATS-2 (EM) WITH DRAWINGS AND AUXILIARY CONTACTS FOR ELEVATOR LOCK-OUT CONTROL AND GENERATOR START-UP. ALSO PROVIDE SIGNAL IN 3/4"C TO ELEV. MACHINE RM TO INDICATE THAT ELEVATORS ARE CONNECTED TO GENERATOR POWER.
3. 12" x 4"W x 1/4" THICK ERICO GND. BAR.

PROVIDE PRICING FOR A 7000 GAL UNDERGROUND TANK BASED ON 7 DAY FUEL SUPPLY AS A BID ALTERNATE.

PERMIT SET

REVISIONS:

NO.	DESCRIPTION	DATE
1	ADDENDUM 2	10/02/14

KEY WEST CITY HALL AT GLYNN ARCHER

PHASE 2

1300 WHITE STREET KEY WEST, FLORIDA

CITY OF KEY WEST

ANTHONY A. SCHULZ LICENSE No 60762 STATE OF FLORIDA PROFESSIONAL ENGINEER

ANTHONY A. SCHULZ P.E. (ELECTRICAL)
FL REG.#0060762

M.E.P.FP. ENGINEER:

HINGS ENGINEERS

HUFSEY, NICOLAIDES, GARCIA , SUAREZ CONSULTING ENGINEERS
4800 S.W. 74th Court Miami, Florida 33155
(305) 270-9935 Fax (305) 666-5891
HNGS # 13-0016

ENRIQUE J. SUAREZ, P.E. (MECHANICAL)
FL REG.#0015794

CARLOS GARCIA, P.E. (ELECTRICAL)
FL REG.#0014104

410 Angela Street
Key West, Florida 33040
Telephone (305) 296-1347
Facsimilie (305) 296-2727
Florida License AAC002022

Bender & Associates ARCHITECTS p.a.

Project N º 1305

POWER RISER DIAGRAM

Date: 8/8/14

E6.1

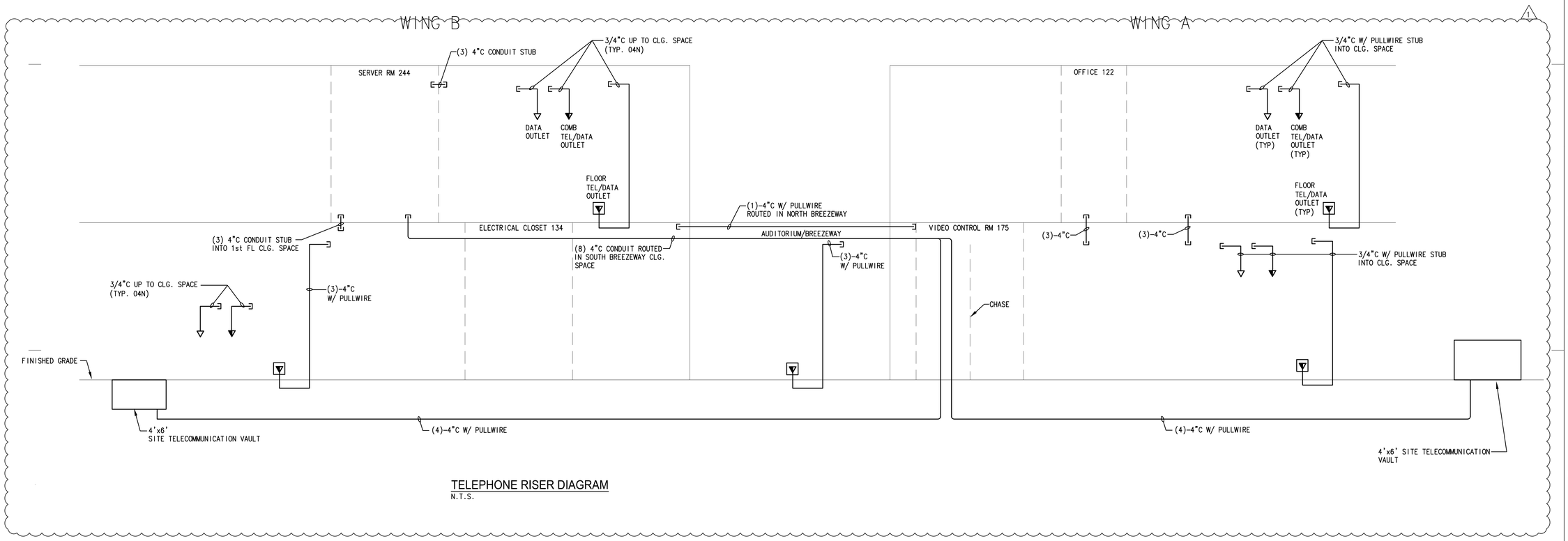

TELEPHONE RISER DIAGRAM
N.T.S.

REVISIONS:		
NO.	DESCRIPTION	DATE
1	ADDENDUM 2	10/02/14

KEY WEST CITY HALL AT GLYNN ARCHER

PHASE 2
1300 WHITE STREET KEY WEST, FLORIDA
CITY OF KEY WEST

ANTHONY A. SCHULZ LICENSE No 60762 STATE OF FLORIDA PROFESSIONAL ENGINEER
ANTHONY A. SCHULZ, P.E. (ELECTRICAL)
FL REG.#0060762

M.E.P.FP. ENGINEER:

HNGS ENGINEERS

HURSEY, NICOLAIDES, GARCIA , SUAREZ CONSULTING ENGINEERS
4850 S.W. 74th Court Miami, Florida 33155
(305) 270-9935 Fax (305) 666-5891
HNGS # 13-0016
ENRIQUE J. SUAREZ, P.E. (MECHANICAL)
FL REG.#0053794
CARLOS GARCIA, P.E. (ELECTRICAL)
FL REG.#0054104

410 Angela Street
Key West, Florida 33040
Telephone (305) 296-1347
Facsimilie (305) 296-2727
Florida License AAC002022

Bender & Associates ARCHITECTS *p.a.*

Project N º 1305

TELEPHONE RISER DIAGRAM

Date: 8/8/14

PERMIT SET

E6.5

SWITCHBOARD 'MSB' WITH INTERNAL TVSS

VOLTAGE: 120/208V,3PH,4W — TYPE: SIEMENS
MAIN: 3P-2500A MCB — A.I.C.: 65 K AIC — MOUNTINGS: SURFACE

CKT No	EQUIPMENT DESCRIPTION	HORSE POWER	KVA	VOLT	PHASE	BRANCH CIRCUIT FRAME	BRANCH CIRCUIT TRIP	BRANCH CIRCUIT POLE	WIRE	CONDUIT	REMARKS
1	DIST. PNL. 'DP'		173	208	3	600	600	3	*	*	* SEE RISER
2	CHILLER #1		113			600	450				
3	CHILLER #2		113			600	450				
4	PANEL A		82.6			400	300				
5	PANEL 2A		63			250	250				
6	PANEL B		68			250	250				
7	PANEL 2B		68.9			250	250				
8	PANEL AVI		9.54			100	100	1			
9	PANEL H		30.62			225	150				
10	SOLAR POWER MAIN					400	400				
11	PANEL UPS		32.3			225	225				
12	SPACE										
13	SPACE										

NOTES: CONNECTED LOAD: 754KVA 2096AMP (1)

DISTRIBUTION PNL 'DP'

VOLTAGE: 120/208V,3PH,4W — TYPE: SIEMENS P3
MAIN: 600A M.L.O. — A.I.C.: 35K — MOUNTINGS: SURFACE

CKT No	EQUIPMENT DESCRIPTION	HORSE POWER	KVA	VOLT	PHASE	BRANCH CIRCUIT FRAME	BRANCH CIRCUIT TRIP	BRANCH CIRCUIT POLE	WIRE	CONDUIT	REMARKS
1	ELEVATOR 1A	20	22.4	208V	3	100	100	3	3#3, 1#8(G)	1 1/4"C	SHUNT TRIP BREAKER
2	ELEVATOR 1B	20	22.4			100	100		3#3, 1#8(G)	1 1/4"C	SHUNT TRIP BREAKER
3	CHWP-1	7.5	9.1			100	50		3#8, 1#10(G)	1"C	
4	CHWP-2	7.5	9.1			100	50		3#8, 1#10(G)	1"C	
5	AHU-2	25	28.1			225	150		3#1/0, 1#6(G)	2"C	
6	AHU-3	10	11.6			100	60		3#6, 1#10(G)	1"C	
7	AHU-1B	25	28.1			225	150		3#1/0, 1#6(G)	2"C	
8	CRAC-1		21.1			100	80		3#4, 1#10(G)	1 1/4"C	
9	CRAC-2		21.1			100	80				
10	CRAC-3		21.1			100	80				*REDUNDANT BACK UP UNIT
11	TVSS	—	—			100	30		4#10,#10(G)	3/4"C	
12											

NOTES: CONNECTED LOAD: 173KVA 480.1AMP

PANEL 'AVI'

VOLTAGE: 120/208V, 3PH, 4W — A.I.C.: 10K — TYPE: SIEMENS PI
MAIN: 100A M.L.O. — MOUNTING: SURFACE

CIRCUIT DESIGNATION	POLE AMPS.	VOLT AMP. A	VOLT AMP. B	VOLT AMP. C	WIRE / COND. SIZE	#	#	WIRE / COND. SIZE	VOLT AMP. A	VOLT AMP. B	VOLT AMP. C	POLE AMPS.	CIRCUIT DESIGNATION
AV RM 125 REC.	1/20	500			2#12, 1#12(G)-1/2"C	1	2	2#12, 1#12(G)-1/2"C	1000			1/20	AV EQUIP.
			500			3	4			1000			
				500		5	6				1000		
AUDITORIUM REC.		720				7	8		720				AVD FL REC.
AVD FL REC.			360			9	10			720			
				360		11	12				1080		
AV REC.		360				13	14		300				AUDITORIUM PROJECTION SCREEN
			360			15	16			1920			AUDITORIUM SHADE CONTR
				360		17	18				960		AUDITORIUM SHADE CONTR
SPARE		—				19	20		—				SPARE
			—			21	22			—			
				—		23	24				—		
		—				25	26	4#10, 1#10(G)-3/4"C	—			3	TVSS
			—			27	28			—			
				—		29	30				—	30	
						31	32						
						33	34						
						35	36						
						37	38						
						39	40						
						41	42						

PHASE A VA 3640
PHASE B VA 2940
PHASE C VA 3300

KVA LOAD CONNECTED 9.57
AMP DEMAND LOAD 26.5A

X:\E-SCHE\PANEL4

PANEL 'H'

VOLTAGE: 120/208V, 3PH, 4W — A.I.C.: 30K — TYPE: SIEMENS PI
MAIN: 150A M.L.O. (1) — MOUNTING: SURFACE

CIRCUIT DESIGNATION	POLE AMPS.	VOLT AMP. A	VOLT AMP. B	VOLT AMP. C	WIRE / COND. SIZE	#	#	WIRE / COND. SIZE	VOLT AMP. A	VOLT AMP. B	VOLT AMP. C	POLE AMPS.	CIRCUIT DESIGNATION
STOR. RM. LTS.	1/20	300			2#12, 1#12(G)-1/2"C	1	2	2#12, 1#12(G)-1/2"C	540			1/20	EXIT REC.
RELAY PNL. N-4			1380			3	4			360			EXIT REC.
(1) FCU-3,4,5,6,7				100		5	6				540		RM. 154, 155, 156 REC.
CHILLER ROOF REC.		540			2#12, 1#12(G)-1/2"C	7	8		360				EXT. WING REC. B
CAR CHARGING STA.	2		3600		2#10, 1#10(G)-3/4"C	9	10			180			BMS CONTROLLER
	40			3600		11	12	2#10, 1#10(G)-1"C			500		GARDEN REC.
CISTERN PUMP	3	2100			3#10, 1#10(G)-3/4"C	13	14	2#12, 1#12(G)-1/2"C	1219				LTG. RELAY N-4A
			2100			15	16			500			LUTRON EQUIP.
	30			2100		17	18				1026		LTG. RELAY N-4A (1)
IRRIGATION CONTROLLER	1/20	500			2#12, 1#12(G)-1/2"C	19	20	2#10, 1#10(G)-3/4"C	3600			2	CAR CHARGING STA.
SPARE			500		—	21	22			3600		40	
SPACE	1/-			500		23	24	—			500		SPARE
		—				25	26					1/-	SPACE
			—			27	28			—			
				—		29	30				—		
		—				31	32		—				
			—			33	34			—			
				—		35	36				—		
		—				37	38	3#10, 1#10G-3/4"C	—			3	TVSS
			—			39	40			—			
				—		41	42				—	30	

PHASE A VA 8940 (1)
PHASE B VA 12840
PHASE C VA 8840

KVA LOAD CONNECTED 30.62 (1)
AMP DEMAND LOAD 85

X:\E-SCHE\PANEL4

PANEL 'LS'

VOLTAGE: 120/208V, 3PH, 4W — A.I.C.: 10K — TYPE: SIEMENS PI
MAIN: 3P-125A M.C.B. — MOUNTING: SURFACE

CIRCUIT DESIGNATION	POLE AMPS.	VOLT AMP. A	VOLT AMP. B	VOLT AMP. C	WIRE / COND. SIZE	#	#	WIRE / COND. SIZE	VOLT AMP. A	VOLT AMP. B	VOLT AMP. C	POLE AMPS.	CIRCUIT DESIGNATION
ELEC. RM. LTS/CHILLER RM. LTS.	1/20	300			2#12, 1#12(G)-1/2"C	1	2	2#12, 1#12(G)-1/2"C	100			1/20	(1) DOOR LOCK WING A
RELAY PNL. DEM-3			980			3	4	2#12, 1#12(G)-1/2"C		100			DOOR LOCK WING B
RELAY PNL. DEM-1&2				540		5	6				270		RELAY PNL. EM-3
RELAY PNL. EM-1		1075				7	8		150				ELEV. PIT LTS. WING IB
WING 1A EXIT LTS.			325			9	10			150			ELEV. PIT LTS. WING IA
RELAY PNL. EM-2				1462		11	12				—		SPARE
RELAY PNL. DEM-5		575				13	14		—				SPARE
RELAY PNL. EM-6			977			15	16			100			EXIT LTS. WING 1B
CORR. 200 WING 2A EXIT LTS.				100		17	18				100		EXIT LTS. WING 2B
RELAY PNL. DEM-4		354				19	20		630				RELAY PNL. DEM-6
RELAY EM-11			432			21	22			800			RELAY EM-9
RELAY EM-7				1202		23	24				315		RELAY EM-4
RELAY EM-8		885				25	26		540				RELAY EM-5
ELEV. CAB LTS. 1A			100			27	28			540			ECR 126 & 127
ELEV. CAB LTS. 1B				100		29	30				350		RELAY EM-10
ELEC. CLOSET (134) 1B		100				31	32		500				FIRE ALARM PNL. (1)
LUTRON EQUIP.			500			33	34			500			FIRE ALARM PWR. (1)
(1) ELEV. MACH. RM. RECEIVE.				500		35	36				500		SERVER RM CLEAN AGENT PNL
CCTV CAMERA		500				37	38	4#10, 1#10G-3/4"C	500			3	TVSS
SPARE			500			39	40			500			
				500		41	42				500	30	

PHASE A VA 7109
PHASE B VA 6404
PHASE C VA 6439

(1) PROVIDE LOCKABLE IN THE 'ON' POSITION. CKT. BKR. FOR BREAKER SERVING F/A PANEL. PROVIDE RED PHENOLIC LABEL ADJACENT TO F/A CKT. BKR. DENOTED WITH FIRE ALARM PANEL.

KVA LOAD CONNECTED 20.0
DEMAND LOAD 55.5A

X:\E-SCHE\PANEL4

PANEL 'UPS'

VOLTAGE: 120/208V, 3PH, 4W — A.I.C.: 10K — TYPE: SIEMENS PI
MAIN: 3P-225A M.C.B. — MOUNTING: SURFACE

CIRCUIT DESIGNATION	POLE AMPS.	VOLT AMP. A	VOLT AMP. B	VOLT AMP. C	WIRE / COND. SIZE	#	#	WIRE / COND. SIZE	VOLT AMP. A	VOLT AMP. B	VOLT AMP. C	POLE AMPS.	CIRCUIT DESIGNATION
SERVER A01 REC.	1/30	2880			2#10, 1#10(G)-3/4"C	1	2	2#12, 1#12(G)-1/2"C	1500			2	SERVER B02 REC.
(1) SERVER A01 REC.			2880			3	4			1500		20	
SERVER A02 REC.				2880		5	6	2#12, 1#12(G)-1/2"C			1500	2	SERVER B02 REC. (1)
(1) SERVER A02 REC.		2880				7	8			1500		20	
SERVER A03 REC.			2880			9	10	2#12, 1#12(G)-1/2"C			1500	2	SERVER B02 REC.
(1) SERVER A03 REC.				2880		11	12				1500	20	
SERVER A04 REC.		2880				13	14	2#12, 1#12(G)-1/2"C	1500			2	SERVER B02 REC. (1)
(1) SERVER A04 REC.			2880			15	16			1500		20	
SERVER B01 REC.				2880		17	18	2#10, 1#10(G)-3/4"C			2880	1/30	SERVER B04 REC.
(1) SERVER B01 REC.		2880				19	20		2880			1/30	SERVER B04 REC. (1)
SERVER B03 REC.			2880			21	22	2#12, 1#12(G)-1/2"C		1000		1/20	CATV REC.
(1) SERVER B03 REC.				2880		23	24				1000		SECURITY REC.
SPARE	1/20	—			—	25	26		540				ROOM REC.
			—			27	28	—		—			SPARE
				—		29	30				—		
		—				31	32			—			
			—			33	34				—		
				—		35	36					—	
		—				37	38	4#10, 1#10(G)-3/4"C	—			3	TVSS
			—			39	40			—			
				—		41	42				—	40	

PHASE A VA 19440
PHASE B VA 17020
PHASE C VA 18400

(1) REDUNDANT LOAD.

LOAD CONNECTED 58460
AMP LOAD 152.4A
DEMAND LOAD 32.3kVA
AMP LOAD 90A

X:\E-SCHE\PANEL4

MSB | DP | AVI | H | LS | UPS

REVISIONS:

NO.	DESCRIPTION	DATE
1	ADDENDUM 2	10/02/14

KEY WEST CITY HALL AT GLYNN ARCHER

PHASE 2
1300 WHITE STREET KEY WEST, FLORIDA
CITY OF KEY WEST

ANTHONY A. SCHULZ LICENSE No 60762 STATE OF FLORIDA PROFESSIONAL ENGINEER
ANTHONY A. SCHULZ P.E. (ELECTRICAL)
FL REG. #0060762

M.E.P.FP. ENGINEER:
HNGS ENGINEERS
HURSEY, NICOLAIDES, GARCIA , SUAREZ CONSULTING ENGINEERS
4800 S.W. 74th Court Miami, Florida 33155
(305) 270-9935 Fax (305) 666-5893
HNGS # 13-0016
☐ ENRIQUE J. SUAREZ, P.E. (MECHANICAL) FL REG.#0015794
☐ CARLOS GARCIA, P.E. (ELECTRICAL) FL REG.#0014324

410 Angela Street
Key West, Florida 33040
Telephone (305) 296-1347
Facsimilie (305) 296-2727
Florida License AAC002022
Bender & Associates ARCHITECTS p.a.

Project N º 1305
PANEL SCHEDULES
Date: 8/8/14

PERMIT SET

E7.01

PANEL ' A '

VOLTAGE: 120/208V,3PH,4W — 18 K AIC — TYPE: SIEMENS
MAIN: 3P-300A M.C.B. — MOUNTING: SURFACE

CIRCUIT DESCRIPTION	POLE AMPS.	VOLT AMP. A	B	C	WIRE / COND. SIZE		#	#	WIRE / COND. SIZE		VOLT AMP. A	B	C	POLE AMPS.	CIRCUIT DESCRIPTION
WING A RELAY PNL DN-4	1/20	720			2#12, 1#12G-1/2"C		1	2	2#12, 1#12G-1/2"C		100			1/20	TU-3-H, 2-19 2-15 VAV
AUDITORIUM LTS			1260				3	4				1500		1/20	TU-2-1-8 VAV
WING A RELAY PNL DN-5				1420			5	6					1000	1/20	TU-2-1-1 VAV
WING A RELAY PNL DN-3		396					7	8			1500			1/20	TU-2-1-6 VAV
WING A RELAY PNL DN-12			864				9	10	2#10, 1#10G-3/4"C			2000		1/25	TU-2-1-3 VAV
WING A RELAY PNL N-1				1445			11	12					2000	1/25	TU-2-1-10 VAV
WING A RELAY PNL N-2		1353					13	14			2000			1/25	TU-3-1-2 VAV
WING A RELAY PNL N-3			860				15	16	2#12, 1#12G-1/2"C			720		1/20	REFRIGERATOR
RM 128 REC.				180			17	18					180		WATER DISPENSER
RM 128 COFFEE		1000					19	20			180				COUNTER REC.
INST. WTR. HTR	2		4160		2#8, 1#10G- 1"C		21	22				500			RM 107 DISHWASHER
RM 108	40			4160			23	24					360		RM 107 WATER DISP.
INST. WTR. HTR	2	4160			2#8, 1#10G- 1"C		25	26			540				RM 107 COFFEE
RM 109	40		4160				27	28	2#12, 1#12G-1/2"C			1500			TU-3-1-4
AUDIT. REC.	1/20			540	2#12, 1#12G-1/2"C		29	30					1000		TU-2-1-2
AUDIT. TRACK LT.		1200					31	32			500				TU-2-1-4
ECR RM. 127 REC.			180		2#12, 1#12G-1/2"C		33	34				1500			FITNESS EQUIP RM 107
ELEV. PIT REC.				180			35	36					1500		
ELEV. PIT SUMP		180					37	38			1500				
EWC RM. 107			600				39	40				900			RM. 107 REC.
EWC CORR. 110				600			41	42					1200		~~RM-107-REF.~~
RM. 125 AV EQUIP.	1/20	1000					43	44			360				RM. 107 MICROWAVE
			1000				45	46				180			~~RM-107-AV-EQUIP~~
				1000			47	48					900		CORR 110, RM III REC
RM. 125 CONV. REC.		900					49	50	2#10, 1#10G-3/4"C		2400			1/25	INST. WTR HTR RM 128
RM. 103, 104 REC.			1080				51	52	2#10, 1#10G-3/4"C			2400		1/25	INST. WTR HTR RM 107
RM. 104 COPIER				1000			53	54	2#12, 1#12G-1/2"C				900	1/20	RM. 100B, CORR 114 REC
RM. 105 REC.		720					55	56			900				RM. 117 REC.
RM. 106 REC.			1080				57	58				1080			RM. 118 REC.
RM. 101, 102 REC.				900			59	60					900		RM. 116 REC.
LOBBY 100 REC.		1080					61	62			1200				RM. 116 REF
RM. 113 REC.			720				63	64				1000			RM. 116 MICR.
RM. 113 REC.				720			65	66					180		RM. 116 CNTR REC.
RM. 120 REC.		540					67	68	2#10, 1#10G-3/4"C		2400			1/25	RM. 116 INST. WTR HTR
RM. 119 REC.			720				69	70	2#12, 1#12G-1/2"C			1080		1/20	RM. 121, 122 REC.
TU-3-1-3	1/25			2000	2#10, 1#10G-3/4"C		71	72					500	1/20	SPARE
AUD. PENDANT LT.	1/20	756			2#12, 1#12G-1/2"C		73	74	4#10, 1#10G-3/4"C		—			3	TVSS
SPARE			500				75	76				—			
				500			77	78					—	30	

PHASE A VA 27585
PHASE B VA 30684
PHASE C VA 25265

KVA 83.5
AMP 232.0

PANEL ' 2A '

VOLTAGE: 120/208V,3PH,4W — 10 K AIC — TYPE: SIEMENS P2
MAIN: 3P-250A M.C.B. — MOUNTING: SURFACE

CIRCUIT DESCRIPTION	POLE AMPS.	VOLT AMP. A	B	C	WIRE / COND. SIZE		#	#	WIRE / COND. SIZE		VOLT AMP. A	B	C	POLE AMPS.	CIRCUIT DESCRIPTION
LTG RELAY N-8	1/20	1170			2#12, 1#12(G)-1/2"C		1	2	2#12, 1#12(G)-1/2"C		600			1/20	RM. 213 LTS.
LTG RELAY DN-7			648				3	4	2#12, 1#12(G)-1/2"C			500		1/20	TU-2-2-1 VAV
LTG RELAY N-9				600			5	6	2#10, 1#10(G)-3/4"C				2000	1/25	TU-2-2-2 VAV
LTG RELAY DN-8		360					7	8	2#12, 1#12(G)-1/2"C		1000			1/20	TU-2-2-3 VAV
LTG RELAY DN-9			1350				9	10	2#12, 1#12(G)-1/2"C			1000		1/20	TU-2-2-4 VAV
FCU-2				100			11	12	2#10, 1#10(G)-3/4"C				2000	1/25	TU-2-2-5 VAV
RM. 228 REC.		900					13	14	2#12, 1#12(G)-1/2"C		1500			1/20	TU-2-2-6 VAV
RM. 228 REC.			540				15	16				1000			TU-2-2-7 VAV
RM. 227 REC.				720			17	18					1500		TU-2-2-8 & 10 VAV
RM. 226, 220 REC.		1080					19	20	2#10, 1#10(G)-3/4"C		2000			1/25	TU-2-2-9 VAV
RM. 226 SPEAKER			500				21	22	2#12, 1#12(G)-1/2"C			900		1/20	CONF. RM. REC.
RM. 220 REC.				900			23	24					360		
RM. 219 REC.		1080					25	26			360				
RM. 200 REC.			720				27	28				1200			RM. 216 REF
CORR. 200,201,202 REC.				1080			29	30					1200		RM. 216 MICROWAVE
UTILITY RM. REC.		540					31	32			540				RM. 216 REC.
RM. 206 REC.			540				33	34	2#10, 1#10(G)-3/4"C			2250		2	WATER HEATER
RM. 206 REC.				720			35	36					2250	30	RM. 203
RM. 207 REC.		720					37	38	2#12, 1#12(G)-1/2"C		1080			1/20	RM. 208 & 209 REC
RM. 205, 212 REC.			900				39	40				720			RM. 210 CORR. 205 REC.
RM. 213 REC.				1080			41	42					720		RM. 222
FCU-2		100					43	44			500				RM. 211 EQUIP.
INST. WTR. HTR. RM. 217	1/25		2400		2#10, 1#10(G)-3/4"C		45	46				1500			
RM. 221 REC.	1/20			540	2#12, 1#12(G)-1/2"C		47	48					500		
TU-2-2-11		1500			2#12, 1#12(G)-1/2"C		49	50			720				RM. 224 REC.
LTG RELAY N-14			500				51	52				1656			EF-2 (ROOF)
CORR. 229 REC.				720	2#12, 1#12(G)-1/2"C		53	54					696		EF-3 (ROOF)
SPARE		500					55	56			180				ROOF REC.
			500				57	58				500			WATER DISPENSER
				500			59	60					500		SPARE
		500					61	62			500				
			500				63	64				500			
				500			65	66					500		
		500					67	68			500				
			500				69	70				500			
				500			71	72					500		
		500					73	74	4#10, 1#10(G)-3/4"C		—			3	TVSS
			500				75	76				—			
				500			77	78					—	30	

PHASE A VA 18930
PHASE B VA 23071
PHASE C VA 21186

KVA 63
AMP 176

PANEL ' B '

VOLTAGE: 120/208V,3PH,4W — 18 K AIC — TYPE: SIEMENS P2
MAIN: 3P-250A M.C.B. — MOUNTING: SURFACE

CIRCUIT DESCRIPTION	POLE AMPS.	VOLT AMP. A	B	C	WIRE / COND. SIZE		#	#	WIRE / COND. SIZE		VOLT AMP. A	B	C	POLE AMPS.	CIRCUIT DESCRIPTION
RELAY RM DN-9&10	1/20	1170			2#12, 1#12G-1/2"C		1	2	2#10, 1#10G-3/4"C		2500			1/30	TU-1-1-1 VAV
RELAY RM DN-11			1125				3	4	2#10, 1#10G-3/4"C			2000		1/25	TU-1-1-2 VAV
WING 1B LTS				675			5	6	2#12, 1#12G-3/4"C				1500	1/20	TU-1-1-3 VAV
RELAY RM N-5		885					7	8	2#12, 1#12G-3/4"C		1500			1/20	TU-1-1-4 VAV
RELAY RM N-6			1170				9	10	2#10, 1#10G-3/4"C			2000		1/25	TU-1-1-5 VAV
RELAY RM N-7				600			11	12	2#12, 1#12G-1/2"C				500	1/20	TU-1-1-6,7 VAV
RM 131 REC.		720					13	14	2#10, 1#10G-3/4"C		2000			1/25	TU-1-1-8 VAV
RM. 131 REC.			720				15	16	2#12, 1#12G-1/2"C			1500		1/20	TU-1-1-9 VAV
RM. 130 REC.				540			17	18					180		ELEC. RM. REC.
RM. 130 REC.		540					19	20			600				CORR. 129S EWC
RM. 130 REC.			540				21	22				900			CORR. 129S EWC
RM. 130 REC.				540			23	24					1000		RM. 129T PWR. FURN.
RM. 133 REC.		1080					25	26			1000				
RM. 139 REC.			540				27	28				1000			
RM. 140 REC.				720			29	30					1000		RM. 138 PWR. FURN.
RM. 141 REC.		720					31	32			900				RM. 137 REC
OFF. 143 PWR FURN			1200				33	34				1500			COPY MACH. CORR. 135A
OFF. 143 PWR FURN				1200			35	36					500		PRINTER CORR. 135A
OFF. 143 PWR FURN		1200					37	38			1200				BREAK RM. 136 REF
WATER HTR RM 144	2		2250		2#10, 1#10G-3/4"C		39	40				1200			BREAK RM. 136 MICRO
	30			2250			41	42					360		BREAK RM. 136 REC
RM. 145,146 CORR. REC	1/20	1080			2#12, 1#12G-1/2"C		43	44			1200				BREAK RM. 152 REF
RM. 153 REC.			900				45	46				1200			BREAK RM. 152 MICRO
CORR. 147 REC				720			47	48					180		BREAK RM. 152 REC
RM. 148 REC.		540					49	50	2#10, 1#10G-3/4"C		2400			1/25	INST. WTR HTR 152
RM. 149 OFF. REC.			900				51	52	2#12, 1#12G-1/2"C			1000		1/20	BREAK RM. 152 COPIER/SAFE
RM. 150, 151 REC.				1080			53	54					1080		CONFERENCE RM.
ELEV. PIT REC.		180					55	56			900				RM. 138 REC.
ELEV. PIT SUMP			180				57	58				720			RM. 141 REC.
~~RELAY RM N-13~~				500			59	60					500		SPARE
BREAK ROOM 136 MICROW.		500					61	62			500				
SPARE			500				63	64				500			
				500			65	66					500		
		500					67	68			500				
			500				69	70				500			
				500			71	72					500		
		500					73	74	4#10, 1#10G-3/4"C		—			3	TVSS
			500				75	76				—			
				500			77	78					—	30	

PHASE A VA 24815
PHASE B VA 25045
PHASE C VA 18125

KVA 68.0
AMP 189A

PANEL ' 2B '

VOLTAGE: 120/208V,3PH,4W — 18 K AIC — TYPE: SIEMENS P2
MAIN: 3P-250A M.C.B. — MOUNTING: SURFACE

CIRCUIT DESCRIPTION	POLE AMPS.	VOLT AMP. A	B	C	WIRE / COND. SIZE		#	#	WIRE / COND. SIZE		VOLT AMP. A	B	C	POLE AMPS.	CIRCUIT DESCRIPTION
LTG RELAY DN-12&13	1/20	1350			2#12, 1#12G-1/2"C		1	2	2#12, 1#12G-1/2"C		1145			1/20	LTG RELAY N-10
LTG RELAY DN-14			585				3	4				1090			LTG RELAY N-11
LTG RELAY DN-15				684			5	6					450		LTG RELAY N-12
RM. 257,258,259,263		900					7	8			1500				TU-1-2-1 VAV
RM. 256 CORR. REC			1080				9	10				1500			TU-1-2-2 VAV
RM. 257,258 CORR. REC.				1080			11	12					1500		TU-1-2-3 & 4 VAV
RM. 259 PRINTER		500					13	14	2#10, 1#10G- 3/4"C		2000			1/25	TU-1-2-5 VAV
RM. 259 REC			540				15	16				2500		1/30	TU-1-2-6 VAV
RM. 259 REC, 261 REC				720			17	18					2000	1/25	TU-1-2-7 & 8 VAV
RM. 263 REC		540					19	20			2000			1/25	TU-1-2-9 VAV
RM. 262 REC			720				21	22	2#12, 1#12G-1/2"C			720		1/20	RM. 243,245 REC
BREAK AREA INST. WTR. HTR.	1/25			2400	2#10, 1#10G- 3/4"C		23	24					720		RM. 245 REC
BREAK AREA REF	1/20	1200			2#12, 1#12G-1/2"C		25	26			720				RM. 247 REC
BREAK AREA DISHWASHER			1200				27	28				720			RM. 246 REC
CORR. 230,265,266 REC.				900			29	30					360		UTILITY RM. REC.
WATER COOLER		300					31	32			720				RM. 251 REC
FCU-1			100				33	34				600			RM. 251 PWR. FURN.
RM. 239 CORR. REC.				1080			35	36					600		RM. 246 PWR. FURN.
IT TRAINING REC		1000					37	38			1080				RM. 241,252 REC
IT TRAINING REC			1000				39	40				540			RM. 231,238 REC
IT TRAINING REC				1000			41	42					1080		RM. 237,236 REC
IT AV EQUIP.		720					43	44			720				RM. 235 REC
IT AV EQUIP.			900				45	46				1080			RM. 233,234 REC
RM. 254 REC				540			47	48					1080		RM 255,260 REC
RM. 253 COPIER		1000					49	50			1656				EF-1 (ROOF)
RM. 231 REC			900				51	52				180			ROOF REC.
RM. 231 PRINT & COPIER				1000			53	54	3#12, 1#12G-3/4"C				516	3	CU-1
RM. 231 PLOTTER		1500					55	56			516				
RM. 231 REC			360				57	58				516		15	
WTR. HTR	2			2250	2#10, 1#10G- 3/4"C		59	60	3#12, 1#12G-3/4"C				516	3	CU-2
	30	2250					61	62			516				
RM. 251 REC.	1/20		720		2#12, 1#12G-1/2"C		63	64				516		15	
RM. 238 COPIER				1500			65	66	3#12, 1#12G-3/4"C				516	3	CU-3
CORR. 230 REC.		360					67	68			516				
BREAK AREA CNTR REC.			500				69	70				516		15	
BREAK AREA WATER DISP.				500			71	72					500	1/20	SPARE
SPARE		500					73	74	4#10, 1#10G- 3/4"C		—			3	TVSS
			500				75	76				—			
				500			77	78					—	30	

PHASE A VA 25349
PHASE B VA 19583
PHASE C VA 23983

KVA 68.9
AMP 191.4A

REVISIONS:

NO.	DESCRIPTION	DATE
1	ADDENDUM 2	10/02/14

KEY WEST CITY HALL AT GLYNN ARCHER

PHASE 2
1300 WHITE STREET KEY WEST, FLORIDA
CITY OF KEY WEST

ANTHONY A. SCHULZ LICENSE No 60762 STATE OF FLORIDA PROFESSIONAL ENGINEER
ANTHONY A. SCHULZ P.E. (ELECTRICAL)
FL REG. #0060762

M.E.P.FP. ENGINEER:
HN&GS ENGINEERS
HUFSEY, NICOLAIDES, GARCIA , SUAREZ CONSULTING ENGINEERS
4800 S.W. 74th Court Miami, Florida 33155
(305) 270-9935 Fax (305) 666-5893
HNGS # 13-0016
ENRIQUE J. SUAREZ, P.E. (MECHANICAL) FL REG.#0015794
CARLOS GARCIA, P.E. (ELECTRICAL) FL REG.#0074104

410 Angela Street
Key West, Florida 33040
Telephone (305) 296-1347
Facsimilie (305) 296-2727
Florida License AAC002022
Bender & Associates ARCHITECTS p.a.

Project N.º 1305
PANELS SCHEDULES
Date: 8/8/14

PERMIT SET

E7.02

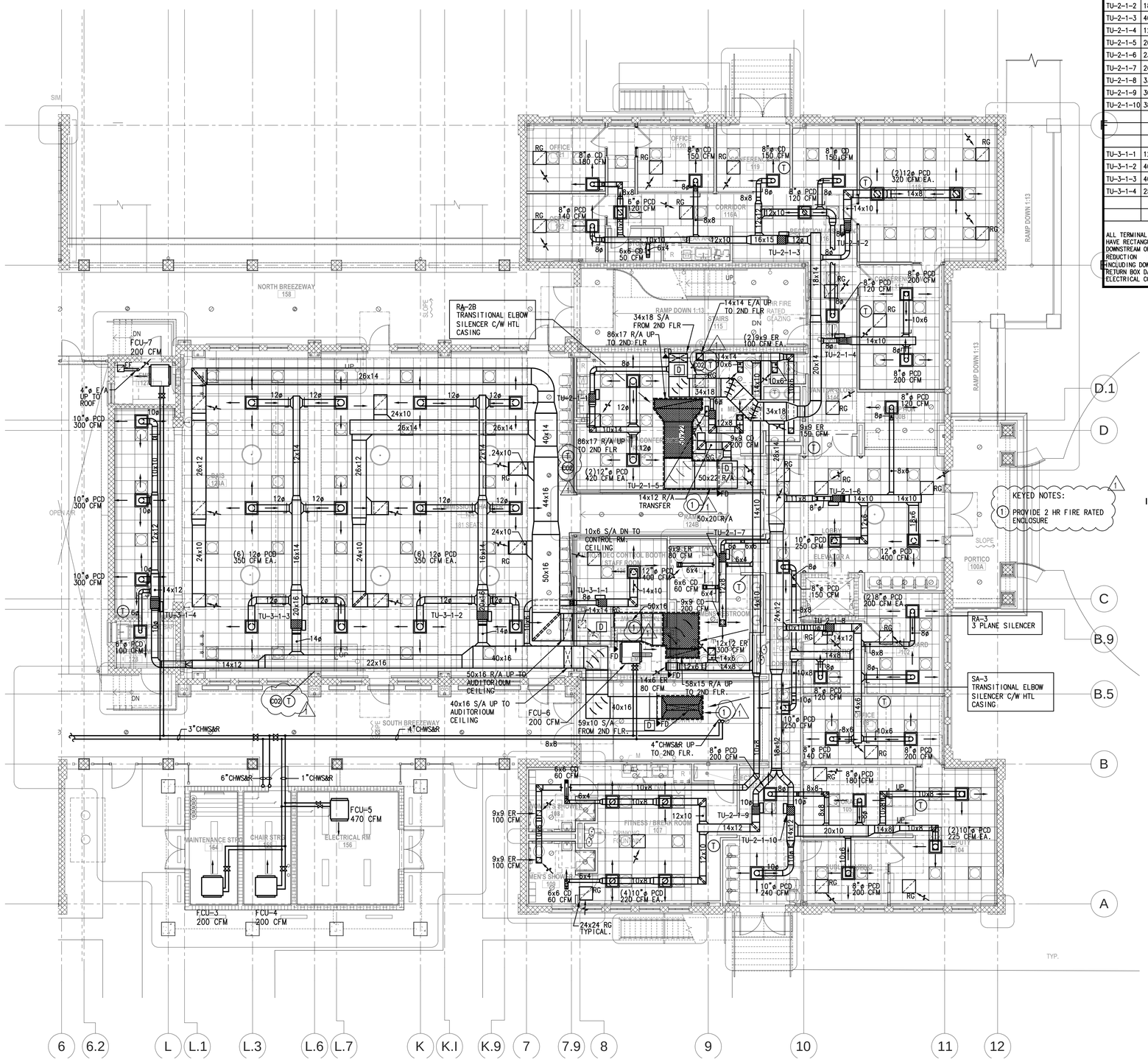

1 1st FLOOR MECHANICAL PLAN- WING A

M2.1A 1/8" = 1'-0"

VAV TERMINAL UNIT SCHEDULE

UNIT BOX#	CFM MIN.	CFM MAX.	CFM HTG	INLET SIZE	MANUFACTURER & MODEL NO.	AREA SERVED – ROOM #	HEATER	ELECT.
TU–2–1–1	180	840	–	8"ø	ETI–SDR	CONFERENCE 113	–	–
TU–2–1–2	180	640	180	8"ø	ETI–SDR	MAYOR 118	1 KW	120V
TU–2–1–3	400	1180	400	12"ø	ETI–SDR	OFFICE 121,123,120,119. RECEP 116	2 KW	120V
TU–2–1–4	120	400	120	8"ø	ETI–SDR	CONFERENCE 117	0.5 KW	120V
TU–2–1–5	200	200	–	6"ø	ETI–SDR	MENS REST. 112	–	–
TU–2–1–6	230	770	230	8"ø	ETI–SDR	LOBBY 100, RECEP 100B	1.5 KW	120V
TU–2–1–7	260	260	–	6"ø	ETI–SDR	WOMEN REST 111	–	–
TU–2–1–8	330	1260	330	10"ø	ETI–SDR	OFFICES 101, 102, 106	1.5 KW	120V
TU–2–1–9	300	1000	–	10"ø	ETI–SDR	FITNESS RM 107	–	–
TU–2–1–10	380	1220	380	10"ø	ETI–SDR	OFFICES 105, 104, 103	2 KW	120V
TU–3–1–1	120	400	–	8"ø	ETI–SDR	VIDEO CONTROL RM 125		
TU–3–1–2	400	2100	400	14"ø	ETI–SDR	COMMISSION CHAMBERS 124	2 KW	120V
TU–3–1–3	400	2100	400	14"ø	ETI–SDR	COMMISSION CHAMBERS 124	2 KW	120V
TU–3–1–4	250	1000	250	10"ø	ETI–SDR	COMMISSION CHAMBERS 124	1.5 KW	120V

ALL TERMINAL UNITS TO BE PRESSURE INDEPENDENT, NORMALLY OPEN, ELECTRICALLY ACTUATED ALL TERMINALS TO HAVE RECTANGULAR OUTLETS FOR CONNECTION TO SHEET METAL LOW VELOCITY DUCTWORK WITH SPLIT DRIVE JOINT DOWNSTREAM OF TERMINALS. UNITS SELECTED AND INLETS SIZED AS REQUIRED FOR STATIC REGAIN DUCT SYSTEMS. NO REDUCTION IN INLET SIZES WILL BE ACCEPTABLE. UNIT PRESSURE REQUIRED SHALL NOT EXCEED 0.25"W.G. (NOT INCLUDING DOWNSTREAM DUCT AND DIFFUSER PRESSURE REQUIREMENT). UPON LOSS OF POWER, BOX ACTUATORS SHALL RETURN BOX DAMPERS TO FULL-OPEN POSITION. PROVIDE VAV TERMINAL UNITS WITH DOUBLE WALL CONSTRUCTION, ELECTRICAL CONTROLS ENCLOSURE WITH TRANSFORMER.

NOTES:

1. ALL OFFICES OR ROOMS WITH PARTITION WALLS TO THE UNDERSIDE OF STRUCTURE SHALL BE PROVIDED WITH FOUR SQUARE FEET OPENING IN FRAMING WALL TO COMMON AREA ABOVE CEILING. NO COMBUSTIBLE MATERIALS ALLOWED IN R/A PLENUM
2. RETRUN AIR IS THROUGH CEILING SPACE, ADEQUATE OPENINGS AND CLEARANCE MUST BE PROVIDED ABOVE CEILING TO ALLOW FOR THE RETURN AIR TO OPERATE PROPERLY.
3. THE GENERAL CONTRACTOR IS REQUIRED TO COORDINATE THE INSTALLATION OF ALL BUILDING SERVICES AND UTILITIES BEING INSTALLED BY THE VARIOUS TRADES. PARTICULAR ATTENTION IS CALLED TO THE INSTALLATION OF MEP AND FIRE SPRINKLER SYSTEMS ABOVE CEILING. THE GLYNN ARCHER SCHOOL IS A SIGNIFICANT LOCAL HISTORIC RESOURCE AND RESTORATION OF THE HISTORIC CHARACTERISTICS OF THE EXTERIOR ENVELOPE HAS BEEN GIVEN A HIGH PRIORITY. THE CEILING HEIGHTS HAVE BEEN DESIGNED TO RESPECT AND RETAIN THE HISTORIC WINDOW HEIGHTS. THE A/E DESIGN TEAM HAS ENDEAVORED TO RESOLVE THE MAJOR ISSUES. HOWEVER,, THE CONTRACTOR SHALL PLAN ALL ACTIVITIES TO ENSURE A MINIMUM OF INTERFERENCE BETWEEN THE TRADES.

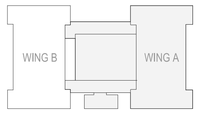

KEY PLAN WING A
1" = 80'-0"

REVISIONS:

1	ADDENDUM 2	10/02/14

KEY WEST CITY HALL AT GLYNN ARCHER

PHASE 2

1300 WHITE STREET KEY WEST, FLORIDA

CITY OF KEY WEST

EDWIN O. CERNA LICENSE No 69808 STATE OF FLORIDA PROFESSIONAL ENGINEER

EDWIN O. CERNA, P.E. (MECHANICAL)
FL REG. #0069808

M.E.P.FP. ENGINEER:

HNGS ENGINEERS

HUFSEY, NICOLAIDES, GARCIA , SUAREZ CONSULTING ENGINEERS
2200 Biscayne Blvd Miami, Miami, Florida 33155
(305) 270-9935 Fax (305) 666-5892
HNGS # 13-0016 -
☐ ENRIQUE J. SUAREZ, P.E. (MECHANICAL) FL REG.#0026704
☐ CARLOS GARCIA, P.E. (ELECTRICAL) FL REG.#0014324

410 Angela Street
Key West, Florida 33040
Telephone (305) 296-1347
Facsimilie (305) 296-2727
Florida License AAC002022

Bender & Associates ARCHITECTS p.a.

Project N º 1305

1ST FLOOR MECHANICAL PLAN - WNG A

Date: 8/8/14

PERMIT SET

M2.1A

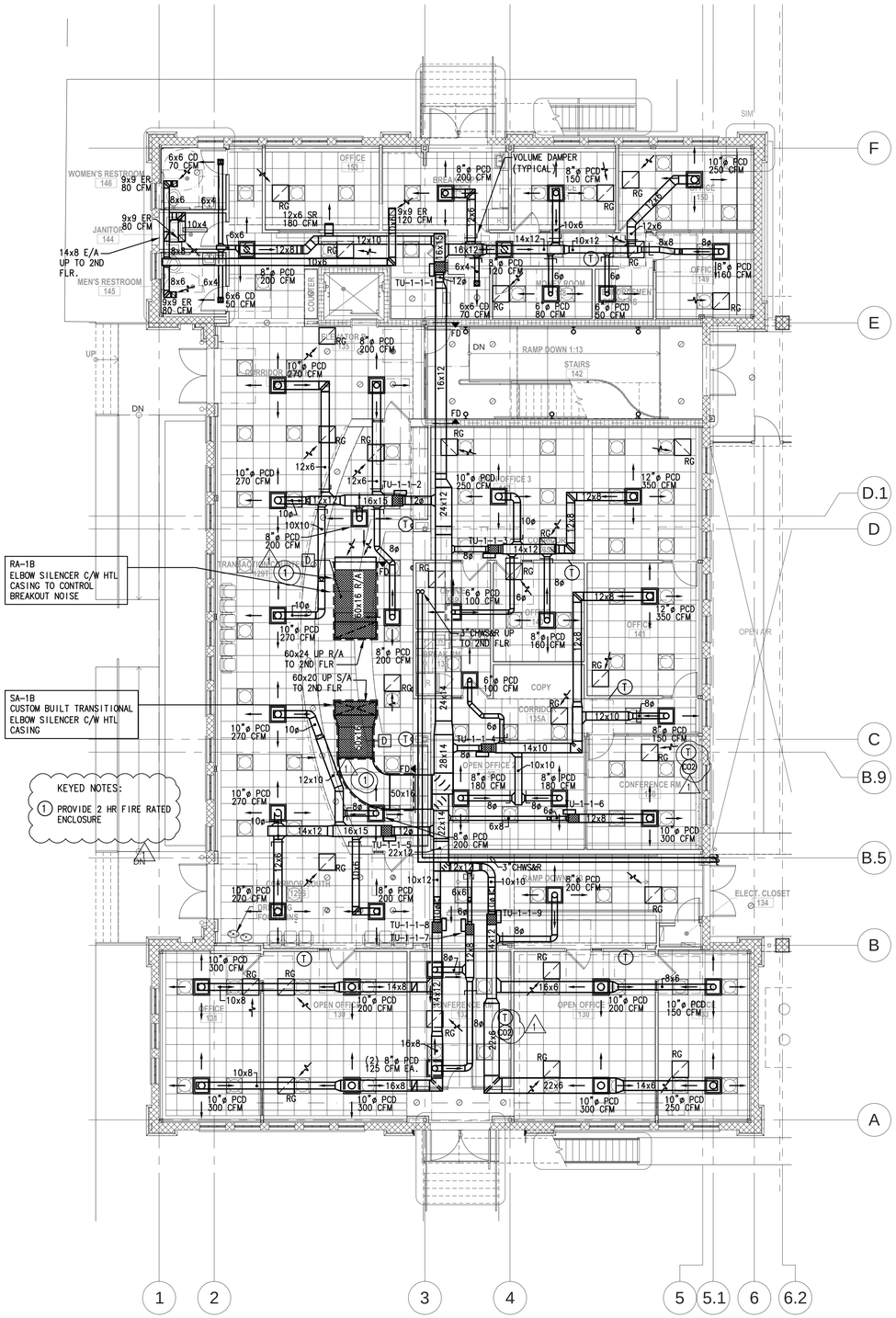

1 1st FLOOR MECHANICAL PLAN- WING B

M2.1B

1/8" = 1'-0"

VAV TERMINAL UNIT SCHEDULE

UNIT BOX#	CFM MIN.	CFM MAX.	CFM HTG	INLET SIZE	MANUFACTURER & MODEL NO.	AREA SERVED – ROOM #	HEATER	ELECT.
TU-1-1-1	500	1510	500	12"ø	ETI-SDR	MONEY RM 148,CORR.147,COPY 152, OFFICES 150,151,152,153	2.5 KW	
TU-1-1-2	420	1410	420	12"ø	ETI-SDR	CORR.NORTH 129N, TRANSACTION COUNTER 129T	2 KW	
TU-1-1-3	260	860	260	8"ø	ETI-SDR	CORR.135B, OFFICES 139,140,143	1.5 KW	
TU-1-1-4	230	780	230	8"ø	ETI-SDR	CORR.135A, BREACK RM 136, OFFICE 137	1.5 KW	
TU-1-1-5	360	1200	360	12"ø	ETI-SDR	CORR.SOUTH 129S	2 KW	
TU-1-1-6	90	300	90	6"ø	ETI-SDR	CONF. RM 138	0.5 KW	
TU-1-1-7	75	250	–	6"ø	ETI-SDR	CONF. RM 132	–	
TU-1-1-8	330	1100	330	10"ø	ETI-SDR	CONF. RM 130,131	2 KW	
TU-1-1-9	270	900	270	10"ø	ETI-SDR	CONF. RM 130,133	1.5 KW	

ALL TERMINAL UNITS TO BE PRESSURE INDEPENDENT, NORMALLY OPEN, ELECTRICALLY ACTUATED
ALL TERMINALS TO HAVE RECTANGULAR OUTLETS FOR CONNECTION TO SHEET METAL
LOW VELOCITY DUCTWORK WITH SPLIT DRIVE JOINT DOWNSTREAM OF TERMINALS. UNITS
SELECTED AND INLETS SIZED AS REQUIRED FOR STATIC REGAIN DUCT SYSTEMS. NO REDUCTION
IN INLET SIZES WILL BE ACCEPTABLE. UNIT PRESSURE REQUIRED SHALL NOT EXCEED 0.25"W.G.
(NOT INCLUDING DOWNSTREAM DUCT AND DIFFUSER PRESSURE REQUIREMENT). UPON LOSS OF
POWER, BOX ACTUATORS SHALL RETURN BOX DAMPERS TO FULL-OPEN POSITION.
PROVIDE VAV TERMINAL UNITS WITH DOUBLE WALL CONSTRUCTION, ELECTRICAL CONTROLS ENCLOSURE WITH TRANSFORMER.

NOTES:

1. ALL OFFICES OR ROOMS WITH PARTITION WALLS TO THE UNDERSIDE OF STRUCTURE SHALL BE PROVIDED WITH FOUR SQUARE FEET OPENING IN FRAMING WALL TO COMMON AREA ABOVE CEILING. NO COMBUSTIBLE MATERIALS ALLOWED IN R/A PLENUM
2. RETRUN AIR IS THROUGH CEILING SPACE, ADEQUATE OPENINGS AND CLEARANCE MUST BE PROVIDED ABOVE CEILING TO ALLOW FOR THE RETURN AIR TO OPERATE PROPERLY.
3. THE GENERAL CONTRACTOR IS REQUIRED TO COORDINATE THE INSTALLATION OF ALL BUILDING SERVICES AND UTILITIES BEING INSTALLED BY THE VARIOUS TRADES. PARTICULAR ATTENTION IS CALLED TO THE INSTALLATION OF MEP AND FIRE SPRINKLER SYSTEMS ABOVE CEILING. THE GLYNN ARCHER SCHOOL IS A SIGNIFICANT LOCAL HISTORIC RESOURCE AND RESTORATION OF THE HISTORIC CHARACTERISTICS OF THE EXTERIOR ENVELOPE HAS BEEN GIVEN A HIGH PRIORITY. THE CEILING HEIGHTS HAVE BEEN DESIGNED TO RESPECT AND RETAIN THE HISTORIC WINDOW HEIGHTS. THE A/E DESIGN TEAM HAS ENDEAVORED TO RESOLVE THE MAJOR ISSUES. HOWEVER,, THE CONTRACTOR SHALL PLAN ALL ACTIVITIES TO ENSURE A MINIMUM OF INTERFERENCE BETWEEN THE TRADES.

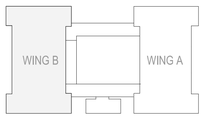

KEY PLAN WING B
1" = 80'-0"

REVISIONS:

1	ADDENDUM 2	10/02/14

KEY WEST CITY HALL AT GLYNN ARCHER

PHASE 2

1300 WHITE STREET KEY WEST, FLORIDA

CITY OF KEY WEST

EDWIN O. CERNA LICENSE No 69808 STATE OF FLORIDA PROFESSIONAL ENGINEER

EDWIN O. CERNA, P.E. (MECHANICAL)
FL REG. #0069808

M.E.P.FP. ENGINEER:

HNGS ENGINEERS

HUFSEY, NICOLAIDES, GARCIA , SUAREZ CONSULTING ENGINEERS
4800 S.W. 74th Court Miami, Florida 33155
(305) 270-9935 Fax (305) 666-5893
HNGS # 13-0016

- ENRIQUE J. SUAREZ, P.E. (MECHANICAL) FL REG.#0015794
- CARLOS GARCIA, P.E. (ELECTRICAL) FL REG.#0014304

410 Angela Street
Key West, Florida 33040
Telephone (305) 296-1347
Facsimilie (305) 296-2727
Florida License AAC002022

Bender & Associates ARCHITECTS *p.a.*

Project N º 1305

1ST FLOOR MECHANICAL PLAN - WING B

Date: 8/8/14

PERMIT SET

M2.1B

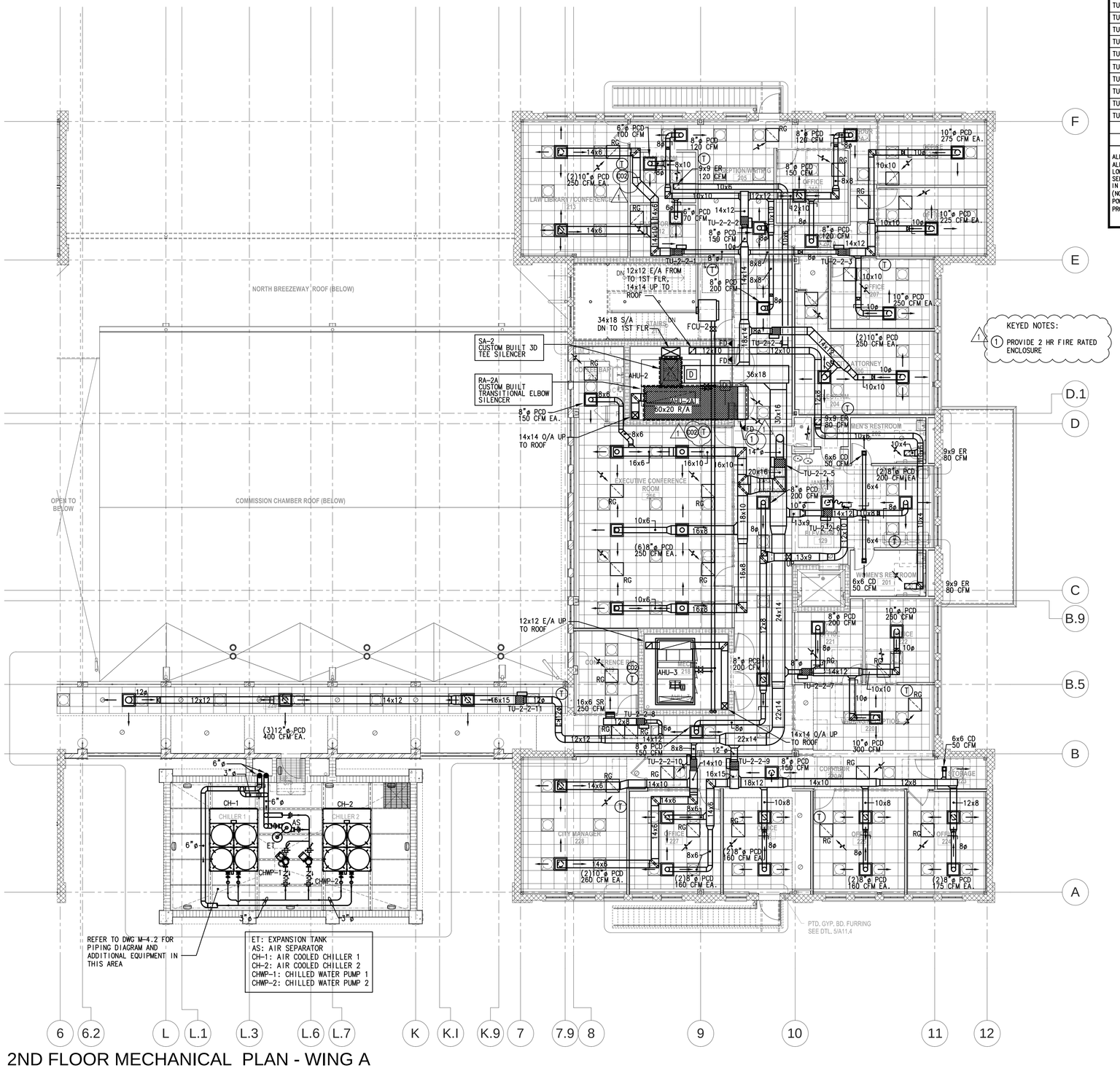

1 2ND FLOOR MECHANICAL PLAN - WING A

M2.2A

1/8" = 1'-0"

VAV TERMINAL UNIT SCHEDULE

UNIT BOX#	CFM MIN.	CFM MAX.	CFM HTG	INLET SIZE	MANUFACTURER & MODEL NO.	AREA SERVED – ROOM #	HEATER	ELECT.
TU-2-2-1	130	500	130	8"ø	ETI-SDR	LIBRARY 213	0.5 KW	
TU-2-2-2	360	1030	360	10"ø	ETI-SDR	OFFICE 210 RECEP 205, COPY 211, STORAGE 212	2 KW	
TU-2-2-3	225	750	225	8"ø	ETI-SDR	OFFICE 207, 208, 209	1 KW	
TU-2-2-4	150	500	150	8"ø	ETI-SDR	CITY ATTORNEY 206	1 KW	
TU-2-2-5	400	1650	400	14"ø	ETI-SDR	CONFERENCE RM 216	2 KW	
TU-2-2-6	300	1050	300	10"ø	ETI-SDR	LOBBY, CORRIDOR 200	1.5 KW	
TU-2-2-7	225	750	225	8"ø	ETI-SDR	OFFICE 221, 222, 220	1 KW	
TU-2-2-8	80	250	80	6"ø	ETI-SDR	CONFERENCE RM 219	0.5KW	
TU-2-2-9	450	1510	450	12"ø	ETI-SDR	STORAGE 223 OFFICES 224, 225, 226, 227	2 KW	
TU-2-2-10	150	520	150	8"ø	ETI-SDR	CITY MANAGER 228	1 KW	
TU-2-2-11	300	1200	300	12"ø	ETI-SDR	CORRIDOR 229	1.5 KW	

ALL TERMINAL UNITS TO BE PRESSURE INDEPENDENT, NORMALLY OPEN, ELECTRICALLY ACTUATED
ALL TERMINALS TO HAVE RECTANGULAR OUTLETS FOR CONNECTION TO SHEET METAL
LOW VELOCITY DUCTWORK WITH SPLIT DRIVE JOINT DOWNSTREAM OF TERMINALS. UNITS
SELECTED AND INLETS SIZED AS REQUIRED FOR STATIC REGAIN DUCT SYSTEMS. NO REDUCTION
IN INLET SIZES WILL BE ACCEPTABLE. UNIT PRESSURE REQUIRED SHALL NOT EXCEED 0.25"W.G.
(NOT INCLUDING DOWNSTREAM DUCT AND DIFFUSER PRESSURE REQUIREMENT). UPON LOSS OF
POWER, BOX ACTUATORS SHALL RETURN BOX DAMPERS TO FULL-OPEN POSITION.
PROVIDE VAV TERMINAL UNITS WITH DOUBLE WALL CONSTRUCTION, ELECTRICAL CONTROLS ENCLOSURE WITH TRANSFORMER.

NOTES:

1. ALL OFFICES OR ROOMS WITH PARTITION WALLS TO THE UNDERSIDE OF STRUCTURE SHALL BE PROVIDED WITH FOUR SQUARE FEET OPENING IN FRAMING WALL TO COMMON AREA ABOVE CEILING. NO COMBUSTIBLE MATERIALS ALLOWED IN R/A PLENUM
2. RETRUN AIR IS THROUGH CEILING SPACE, ADEQUATE OPENINGS AND CLEARANCE MUST BE PROVIDED ABOVE CEILING TO ALLOW FOR THE RETURN AIR TO OPERATE PROPERLY.
3. THE GENERAL CONTRACTOR IS REQUIRED TO COORDINATE THE INSTALLATION OF ALL BUILDING SERVICES AND UTILITIES BEING INSTALLED BY THE VARIOUS TRADES. PARTICULAR ATTENTION IS CALLED TO THE INSTALLATION OF MEP AND FIRE SPRINKLER SYSTEMS ABOVE CEILING. THE GLYNN ARCHER SCHOOL IS A SIGNIFICANT LOCAL HISTORIC RESOURCE AND RESTORATION OF THE HISTORIC CHARACTERISTICS OF THE EXTERIOR ENVELOPE HAS BEEN GIVEN A HIGH PRIORITY. THE CEILING HEIGHTS HAVE BEEN DESIGNED TO RESPECT AND RETAIN THE HISTORIC WINDOW HEIGHTS. THE A/E DESIGN TEAM HAS ENDEAVORED TO RESOLVE THE MAJOR ISSUES. HOWEVER,, THE CONTRACTOR SHALL PLAN ALL ACTIVITIES TO ENSURE A MINIMUM OF INTERFERENCE BETWEEN THE TRADES.

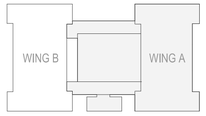

KEY PLAN WING A
1" = 80'-0"

REVISIONS:

1	ADDENDUM 2	10/02/14

KEY WEST CITY HALL AT GLYNN ARCHER

PHASE 2

1300 WHITE STREET KEY WEST, FLORIDA

CITY OF KEY WEST

EDWIN O. CERNA LICENSE No 69808 STATE OF FLORIDA PROFESSIONAL ENGINEER

EDWIN O. CERNA, P.E. (MECHANICAL)
FL REG. #0069808

M.E.P.FP. ENGINEER:

HINGS ENGINEERS

HUFSEY, NICOLAIDES, GARCIA , SUAREZ CONSULTING ENGINEERS
4800 S.W. 74th Court Miami, Florida 33155
(305) 270-9935 Fax (305) 666-5893
HNGS # 13-0016

- ENRIQUE J. SUAREZ, P.E. (MECHANICAL) FL REG.#0015794
- CARLOS GARCIA, P.E. (ELECTRICAL) FL REG.#0014104

410 Angela Street
Key West, Florida 33040
Telephone (305) 296-1347
Facsimilie (305) 296-2727
Florida License AAC002022

Bender & Associates ARCHITECTS p.a.

Project N º 1305

2ND FLOOR MECHANICAL PLAN - WING A

Date: 8/8/14

PERMIT SET

M2.2A

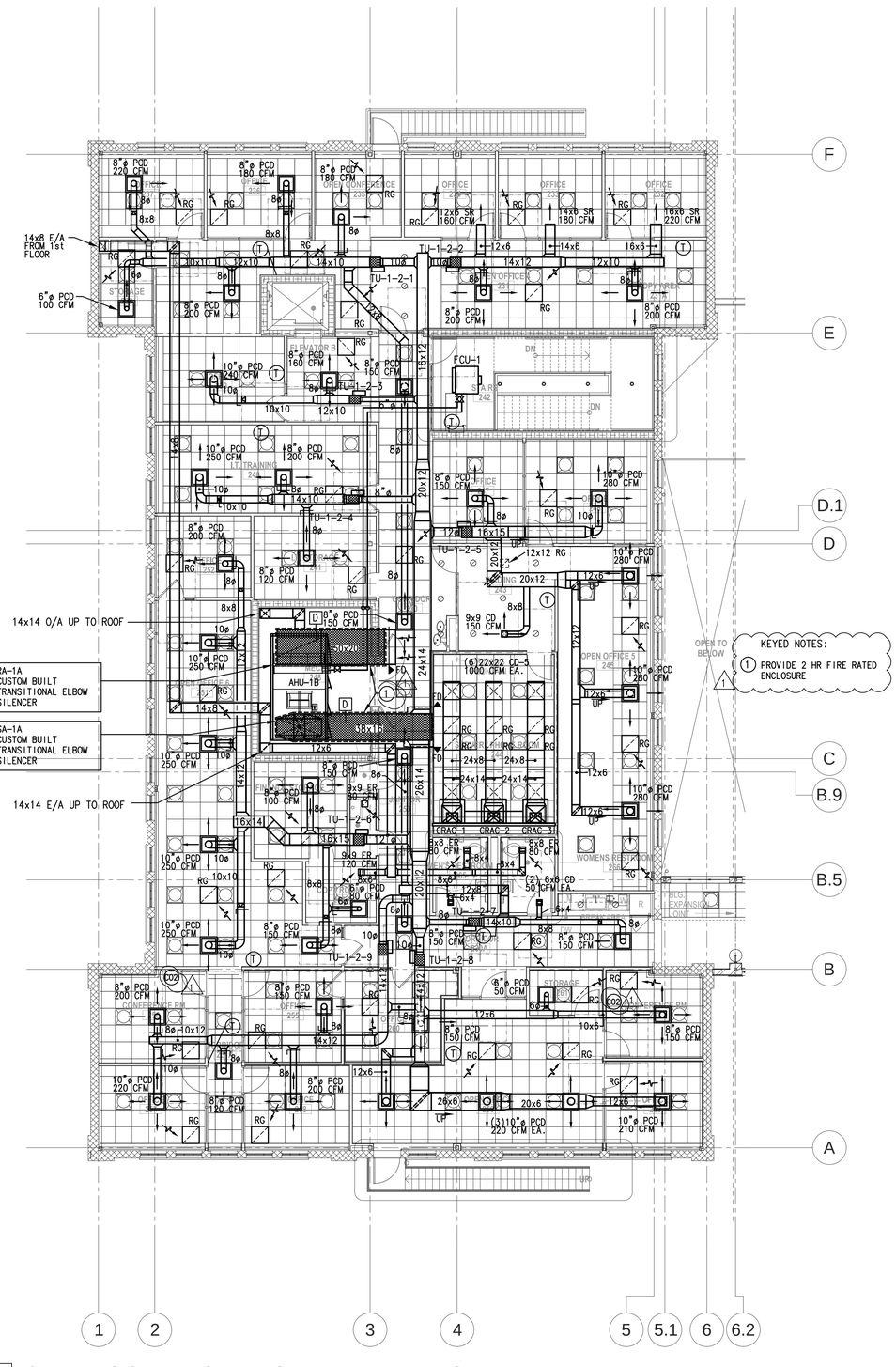

1 2ND FLOOR MECHANICAL PLAN - WING B

M2.2B

1/8" = 1'-0"

VAV TERMINAL UNIT SCHEDULE

UNIT BOX#	CFM MIN.	CFM MAX.	CFM HTG	INLET SIZE	MANUFACTURER & MODEL NO.	AREA SERVED – ROOM #	HEATER	ELECT.
TU-1-2-1	320	1180	320	10"ø	ETI-SDR	OFFICE 235, 236,237, STORAGE 238 CORRIDOR 230	1.5 KW	120 V
TU-1-2-2	340	1140	340	10"ø	ETI-SDR	OFFICE 231, 232, 233, 234, COPY 231A	1.5 KW	120 V
TU-1-2-3	120	400	120	6"ø	ETI-SDR	OFFICE 239	0.5 KW	
TU-1-2-4	170	570	170	8"ø	ETI-SDR	I.T.TRAINING 240,I.T.STORAGE 241	1 KW	
TU-1-2-5	420	1420	420	12"ø	ETI-SDR	OFFICE 247, 246,WAITING 243, OFFICE 245	2 KW	
TU-1-2-6	550	1530	550	12"ø	ETI-SDR	FINANCE STORAGE 254, OFFICE 251,252, COPY 253	2.5 KW	
TU-1-2-7	–	550	–	8"ø	ETI-SDR	CORR 230, 230A, WOMEN RM 266, MENS RM 265	–	
TU-1-2-8	360	1070	360	10"ø	ETI-SDR	OFFICE 259,260,261,263,262	2 KW	
TU-1-2-9	360	1040	360	10"ø	ETI-SDR	OFFICE 255, CONFERENCE RM 256,257,258,260,CORR. 251A	2 KW	

ALL TERMINAL UNITS TO BE PRESSURE INDEPENDENT, NORMALLY OPEN, ELECTRICALLY ACTUATED
ALL TERMINALS TO HAVE RECTANGULAR OUTLETS FOR CONNECTION TO SHEET METAL
LOW VELOCITY DUCTWORK WITH SPLIT DRIVE JOINT DOWNSTREAM OF TERMINALS. UNITS
SELECTED AND INLETS SIZED AS REQUIRED FOR STATIC REGAIN DUCT SYSTEMS. NO REDUCTION
IN INLET SIZES WILL BE ACCEPTABLE. UNIT PRESSURE REQUIRED SHALL NOT EXCEED 0.25"W.G.
(NOT INCLUDING DOWNSTREAM DUCT AND DIFFUSER PRESSURE REQUIREMENT). UPON LOSS OF
POWER, BOX ACTUATORS SHALL RETURN BOX DAMPERS TO FULL-OPEN POSITION.
PROVIDE VAV TERMINAL UNITS WITH DOUBLE WALL CONSTRUCTION, ELECTRICAL CONTROLS ENCLOSURE WITH TRANSFORMER.

NOTES:

1. ALL OFFICES OR ROOMS WITH PARTITION WALLS TO THE UNDERSIDE OF STRUCTURE SHALL BE PROVIDED WITH FOUR SQUARE FEET OPENING IN FRAMING WALL TO COMMON AREA ABOVE CEILING. NO COMBUSTIBLE MATERIALS ALLOWED IN R/A PLENUM
2. RETRUN AIR IS THROUGH CEILING SPACE, ADEQUATE OPENINGS AND CLEARANCE MUST BE PROVIDED ABOVE CEILING TO ALLOW FOR THE RETURN AIR TO OPERATE PROPERLY.
3. THE GENERAL CONTRACTOR IS REQUIRED TO COORDINATE THE INSTALLATION OF ALL BUILDING SERVICES AND UTILITIES BEING INSTALLED BY THE VARIOUS TRADES. PARTICULAR ATTENTION IS CALLED TO THE INSTALLATION OF MEP AND FIRE SPRINKLER SYSTEMS ABOVE CEILING. THE GLYNN ARCHER SCHOOL IS A SIGNIFICANT LOCAL HISTORIC RESOURCE AND RESTORATION OF THE HISTORIC CHARACTERISTICS OF THE EXTERIOR ENVELOPE HAS BEEN GIVEN A HIGH PRIORITY. THE CEILING HEIGHTS HAVE BEEN DESIGNED TO RESPECT AND RETAIN THE HISTORIC WINDOW HEIGHTS. THE A/E DESIGN TEAM HAS ENDEAVORED TO RESOLVE THE MAJOR ISSUES. HOWEVER,, THE CONTRACTOR SHALL PLAN ALL ACTIVITIES TO ENSURE A MINIMUM OF INTERFERENCE BETWEEN THE TRADES.

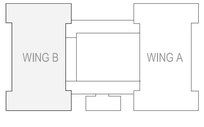

KEY PLAN WING B
1" = 80'-0"

REVISIONS:

1	ADDENDUM 2	10/02/14

KEY WEST CITY HALL AT GLYNN ARCHER

PHASE 2

1300 WHITE STREET KEY WEST, FLORIDA

CITY OF KEY WEST

EDWIN O. CERNA LICENSE No 69808 STATE OF FLORIDA PROFESSIONAL ENGINEER

EDWIN O. CERNA, P.E. (MECHANICAL)
FL REG. #0069808

M.E.P.FP. ENGINEER:

HNTGS ENGINEERS

HUFSEY, NICOLAIDES, GARCIA , SUAREZ CONSULTING ENGINEERS
2200 S.W. 57th Court Miami, Florida 33155
(305) 270-9935 Fax (305) 666-5892
HNGS # 13-0016
☐ ENRIQUE J. SUAREZ, P.E. (MECHANICAL) FL REG.#0052784
☐ CARLOS GARCIA, P.E. (ELECTRICAL) FL REG.#0014324

410 Angela Street
Key West, Florida 33040
Telephone (305) 296-1347
Facsimilie (305) 296-2727
Florida License AAC002022

Bender & Associates ARCHITECTS p.a.

Project N º 1305

2ND FLOOR MECHANICAL PLAN - WING B

Date: 8/8/14

PERMIT SET

M2.2B

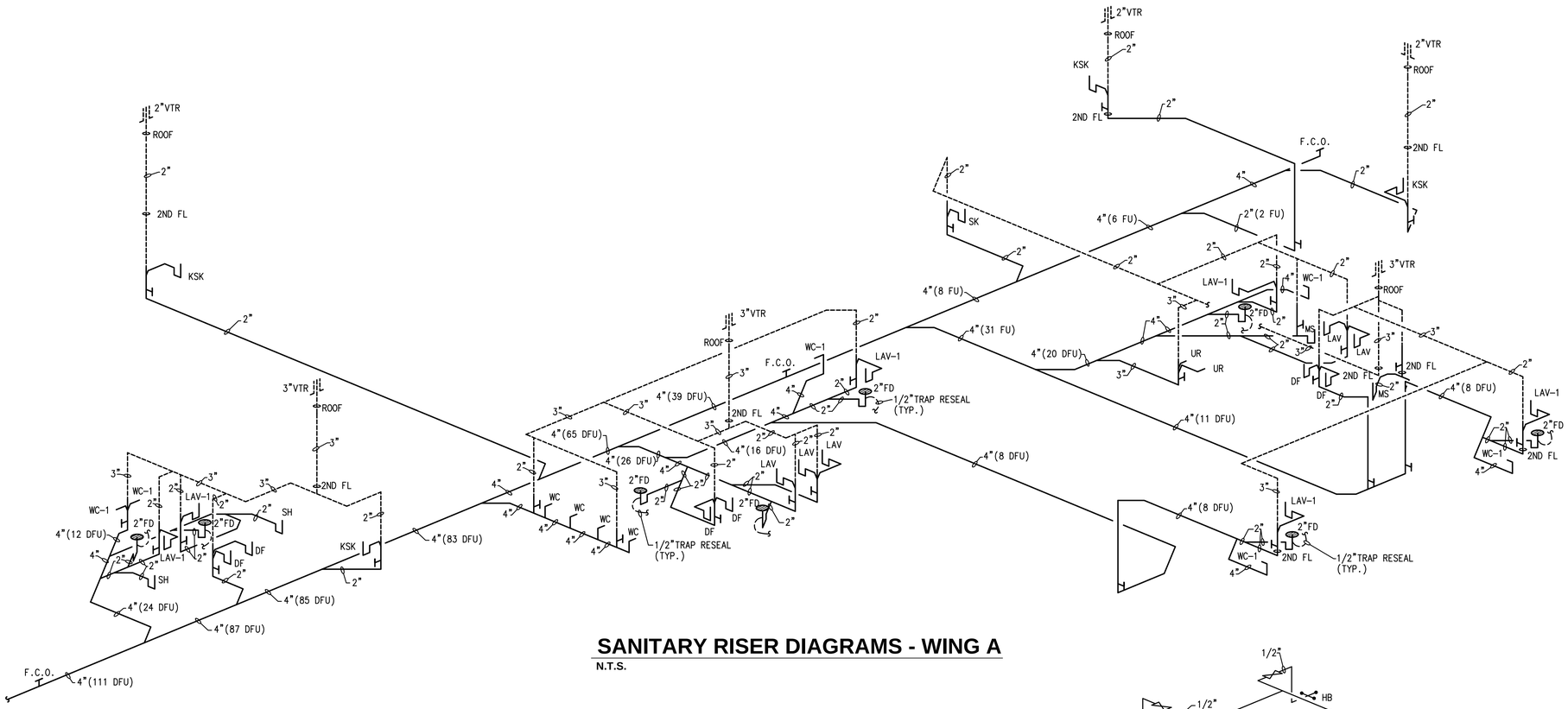

SANITARY RISER DIAGRAMS - WING A

N.T.S.

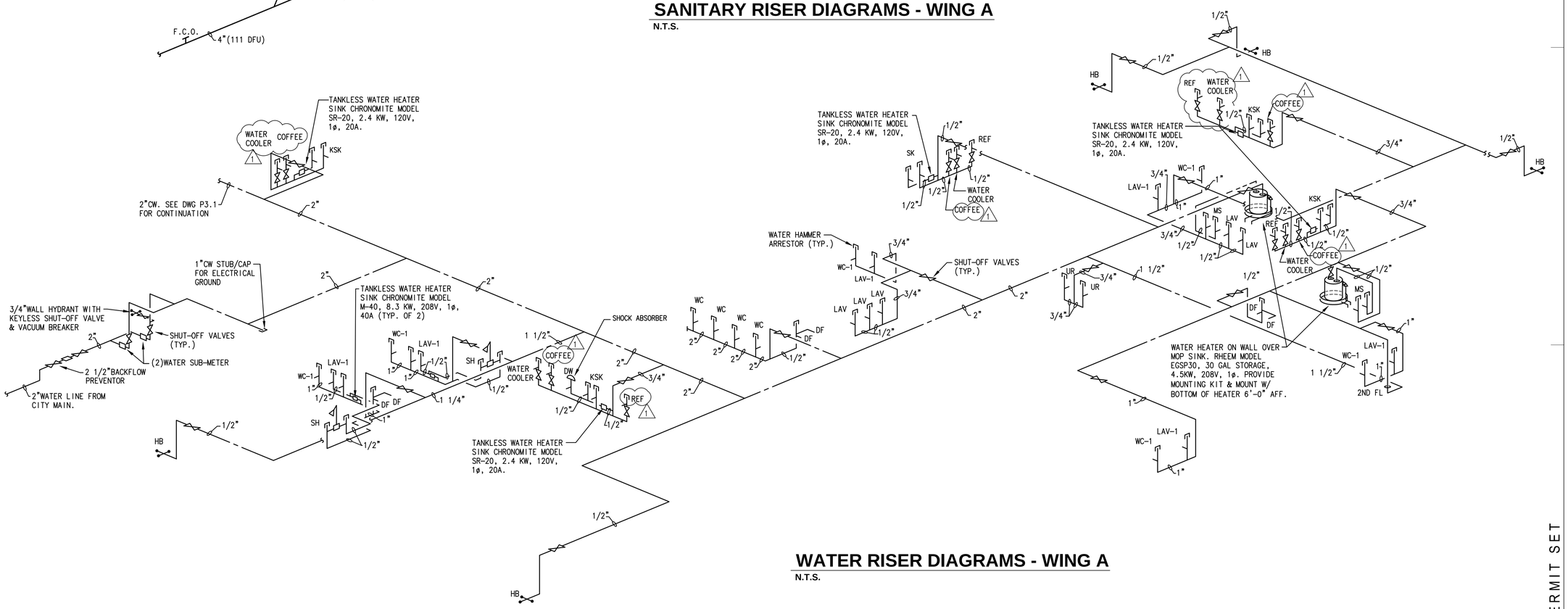

WATER RISER DIAGRAMS - WING A

N.T.S.

REVISIONS:		
1	ADDENDUM 2	10/02/14

KEY WEST CITY HALL AT GLYNN ARCHER

PHASE 2

1300 WHITE STREET KEY WEST, FLORIDA

CITY OF KEY WEST

EDWIN O. CERNA LICENSE No 69808 STATE OF FLORIDA PROFESSIONAL ENGINEER

EDWIN O. CERNA, P.E. (MECHANICAL)
FL REG. #0069808

M.E.P.FP. ENGINEER:

HINGS ENGINEERS

HURSEY, NICOLAIDES, GARCIA , SUAREZ CONSULTING ENGINEERS
4800 S.W. 74th Ave. Miami, Florida 33155
(305) 270-9905-Fax (305) 666-5893
HINGS # 13-0016

- ENRIQUE J. SUAREZ P.E. (MECHANICAL) FL REG.#0015794
- CARLOS GARCIA, P.E. (ELECTRICAL) FL REG.#0014104

410 Angela Street
Key West, Florida 33040
Telephone (305) 296-1347
Facsimilie (305) 296-2727
Florida License AAC002022

Bender & Associates ARCHITECTS p.a.

Project N.º 1305

PLUMBING RISERS DIAGRAMS

Date: 8/8/14

PERMIT SET

P4.1

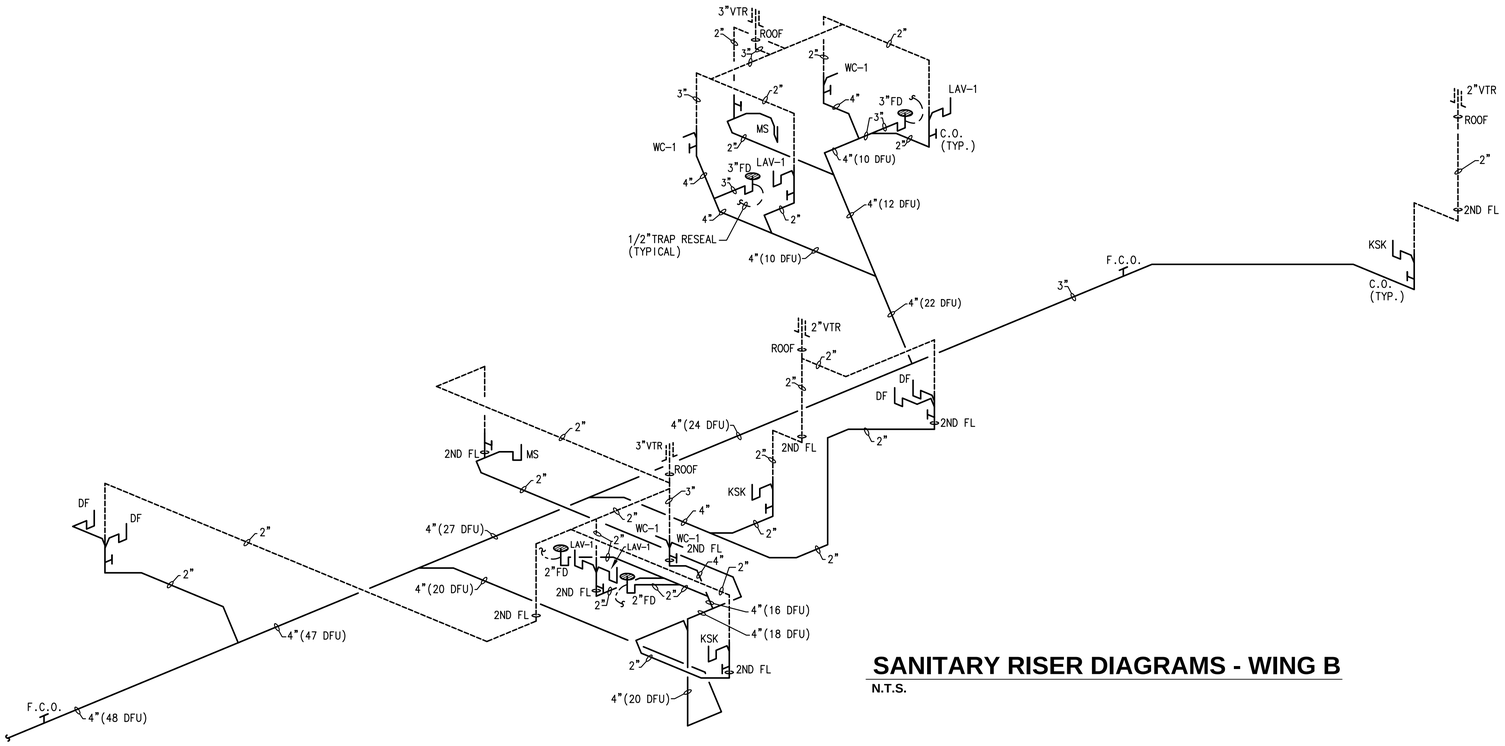

SANITARY RISER DIAGRAMS - WING B

N.T.S.

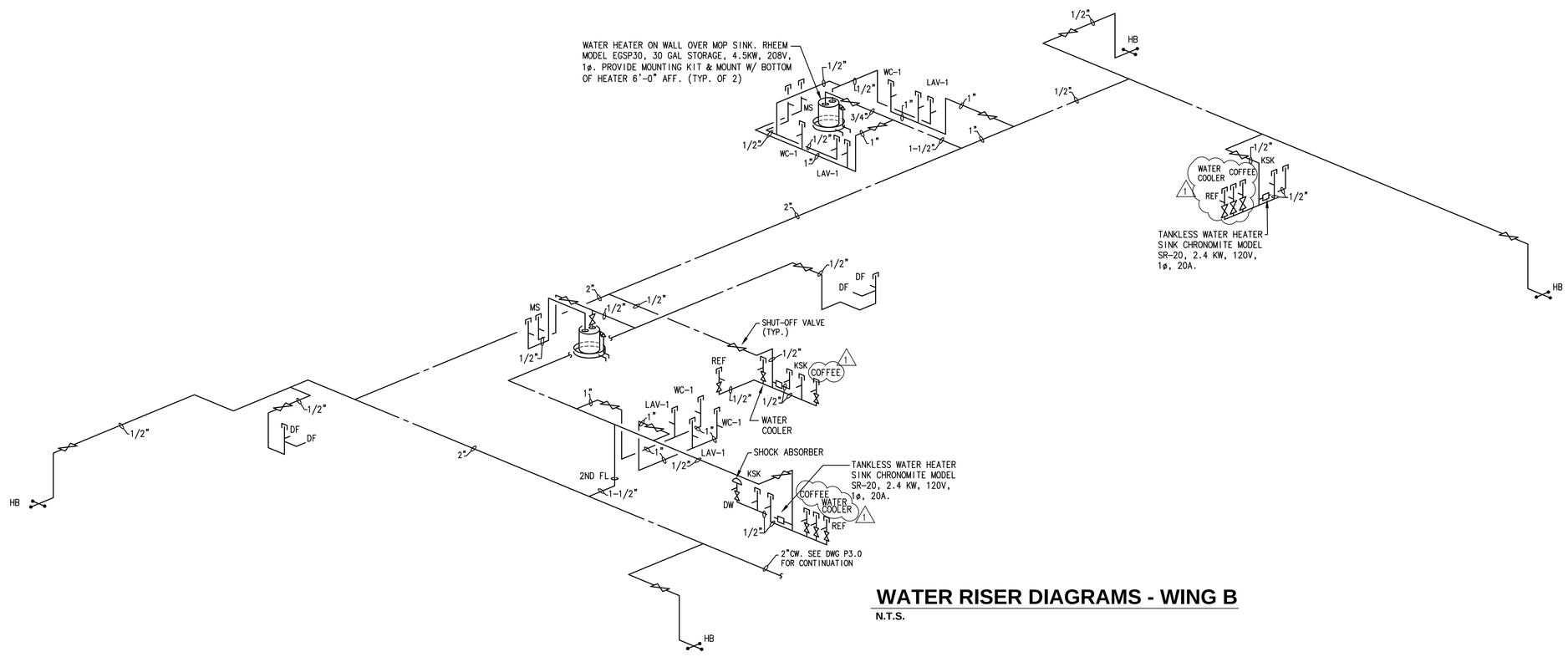

WATER RISER DIAGRAMS - WING B

N.T.S.

REVISIONS:

1	ADDENDUM 2	10/02/14

KEY WEST CITY HALL AT GLYNN ARCHER

PHASE 2

1300 WHITE STREET KEY WEST, FLORIDA

CITY OF KEY WEST

EDWIN O. CERNA LICENSE No 69808 STATE OF FLORIDA PROFESSIONAL ENGINEER

EDWIN O. CERNA, P.E. (MECHANICAL)
FL REG. #0069808

M.E.P.FP. ENGINEER:

HN&GS ENGINEERS

HUFSEY, NICOLAIDES, GARCIA , SUAREZ CONSULTING ENGINEERS
4800 S.W. 74th Court Miami, Florida 33155
(305) 270-9935 Fax (305) 666-5893
HN&GS # 13-0016
ENRIQUE J. SUAREZ, P.E. (MECHANICAL) FL REG.#0015794
CARLOS GARCIA, P.E. (ELECTRICAL) FL REG.#0014104

410 Angela Street
Key West, Florida 33040
Telephone (305) 296-1347
Facsimilie (305) 296-2727
Florida License AAC002022

Bender & Associates ARCHITECTS p.a.

Project N° 1305

PLUMBING RISERS DIAGRAMS

Date: 8/8/14

PERMIT SET

P4.2