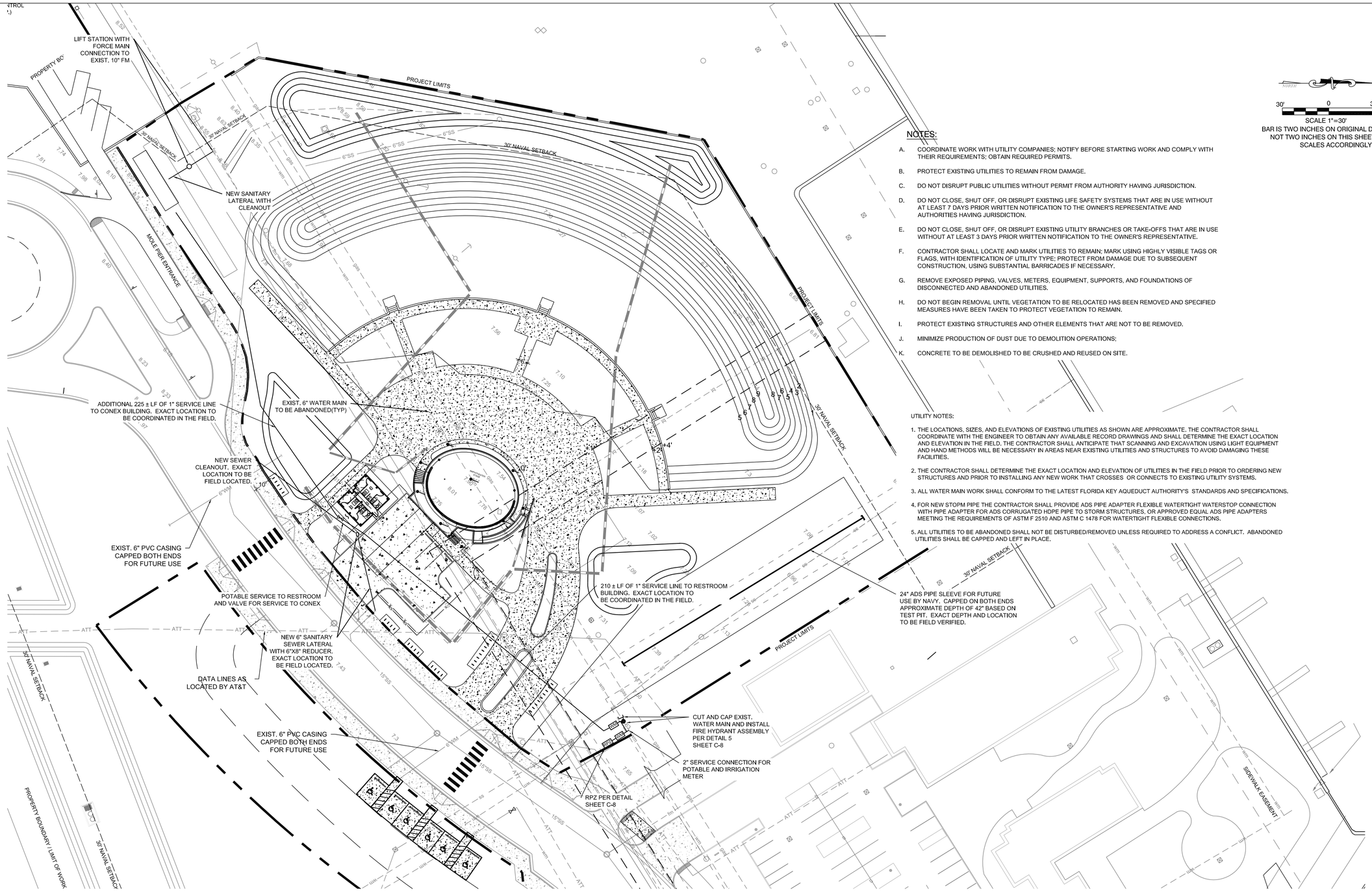


NORTH

30' 0 30'

SCALE 1"=30'

BAR IS TWO INCHES ON ORIGINAL DRAWINGS IF NOT TWO INCHES ON THIS SHEET ADJUST SCALES ACCORDINGLY

## NOTES:

A. COORDINATE WORK WITH UTILITY COMPANIES; NOTIFY BEFORE STARTING WORK AND COMPLY WITH THEIR REQUIREMENTS; OBTAIN REQUIRED PERMITS.

B. PROTECT EXISTING UTILITIES TO REMAIN FROM DAMAGE.

C. DO NOT DISRUPT PUBLIC UTILITIES WITHOUT PERMIT FROM AUTHORITY HAVING JURISDICTION.

D. DO NOT CLOSE, SHUT OFF, OR DISRUPT EXISTING LIFE SAFETY SYSTEMS THAT ARE IN USE WITHOUT AT LEAST 7 DAYS PRIOR WRITTEN NOTIFICATION TO THE OWNER'S REPRESENTATIVE AND AUTHORITIES HAVING JURISDICTION.

E. DO NOT CLOSE, SHUT OFF, OR DISRUPT EXISTING UTILITY BRANCHES OR TAKE-OFFS THAT ARE IN USE WITHOUT AT LEAST 3 DAYS PRIOR WRITTEN NOTIFICATION TO THE OWNER'S REPRESENTATIVE.

F. CONTRACTOR SHALL LOCATE AND MARK UTILITIES TO REMAIN; MARK USING HIGHLY VISIBLE TAGS OR FLAGS, WITH IDENTIFICATION OF UTILITY TYPE; PROTECT FROM DAMAGE DUE TO SUBSEQUENT CONSTRUCTION, USING SUBSTANTIAL BARRICADES IF NECESSARY.

G. REMOVE EXPOSED PIPING, VALVES, METERS, EQUIPMENT, SUPPORTS, AND FOUNDATIONS OF DISCONNECTED AND ABANDONED UTILITIES.

H. DO NOT BEGIN REMOVAL UNTIL VEGETATION TO BE RELOCATED HAS BEEN REMOVED AND SPECIFIED MEASURES HAVE BEEN TAKEN TO PROTECT VEGETATION TO REMAIN.

I. PROTECT EXISTING STRUCTURES AND OTHER ELEMENTS THAT ARE NOT TO BE REMOVED.

J. MINIMIZE PRODUCTION OF DUST DUE TO DEMOLITION OPERATIONS;

K. CONCRETE TO BE DEMOLISHED TO BE CRUSHED AND REUSED ON SITE.

UTILITY NOTES:

1. THE LOCATIONS, SIZES, AND ELEVATIONS OF EXISTING UTILITIES AS SHOWN ARE APPROXIMATE. THE CONTRACTOR SHALL COORDINATE WITH THE ENGINEER TO OBTAIN ANY AVAILABLE RECORD DRAWINGS AND SHALL DETERMINE THE EXACT LOCATION AND ELEVATION IN THE FIELD. THE CONTRACTOR SHALL ANTICIPATE THAT SCANNING AND EXCAVATION USING LIGHT EQUIPMENT AND HAND METHODS WILL BE NECESSARY IN AREAS NEAR EXISTING UTILITIES AND STRUCTURES TO AVOID DAMAGING THESE FACILITIES.

2. THE CONTRACTOR SHALL DETERMINE THE EXACT LOCATION AND ELEVATION OF UTILITIES IN THE FIELD PRIOR TO ORDERING NEW STRUCTURES AND PRIOR TO INSTALLING ANY NEW WORK THAT CROSSES OR CONNECTS TO EXISTING UTILITY SYSTEMS.

3. ALL WATER MAIN WORK SHALL CONFORM TO THE LATEST FLORIDA KEY AQUEDUCT AUTHORITY'S STANDARDS AND SPECIFICATIONS.

4. FOR NEW STOPM PIPE THE CONTRACTOR SHALL PROVIDE ADS PIPE ADAPTER FLEXIBLE WATERTIGHT WATERSTOP CONNECTION WITH PIPE ADAPTER FOR ADS CORRUGATED HDPE PIPE TO STORM STRUCTURES, OR APPROVED EQUAL ADS PIPE ADAPTERS MEETING THE REQUIREMENTS OF ASTM F 2510 AND ASTM C 1478 FOR WATERTIGHT FLEXIBLE CONNECTIONS.

5. ALL UTILITIES TO BE ABANDONED SHALL NOT BE DISTURBED/REMOVED UNLESS REQUIRED TO ADDRESS A CONFLICT. ABANDONED UTILITIES SHALL BE CAPPED AND LEFT IN PLACE.

**ENVIRONMENTAL LAND USE CONTROLS NOTE:**
PRIOR TO ANY AND ALL CONSTRUCTION ACTIVITIES, THE CONTRACTOR IS RESPONSIBLE FOR VERIFYING IF LOCATION OF CONSTRUCTION ACTIVITIES ARE SUBJECT TO ENVIRONMENTAL LAND USE CONTROLS (LUC). ANY AND ALL ENCOUNTERED CONTAMINATED SOIL AND OR GROUNDWATER SHALL BE HANDLED PER THE "SOIL AND GROUND WATER MANAGEMENT PLAN", DATED FEBRUARY 13, 2015 INCLUDED IN THE PROJECT MANUAL. CONTRACTOR SHALL VERIFY THAT LUC CONSTRUCTION PERMIT HAS BEEN FILED AND APPROVED FOR THIS WORK.


BERMELLO AJAMIL & PARTNERS INC

Architecture • Engineering • Planning
Interior Design • Landscape Architecture
2601 South Bayshore Drive
Suite 1000
Miami, Florida 33133
(305) 859-2050
Fax (305) 860-3700


PREPARED FOR/OWNER:
**CITY OF KEY WEST, FL**
**P. O. BOX 1409**
**3140 FLAGLER AVENUE**
**KEY WEST, FL 33041**

PROJECT NAME:

# TRUMAN WATERFRONT PARK AMPHITHEATER

PROJECT LOCATION/ADDRESS:
**TRUMAN WATERFRONT PARK**

SUB-CONSULTANT INFORMATION:
***PEREZ ENGINEERING & DEVELOPMENT, INC.***

Certificate of Authorization No. 8579

1010 Kennedy Drive
Suite 201
Key West, Florida 33040
(305) 293-9440
Fax (305) 296-0243

PROFESSIONAL SEAL:

**ALLEN E. PEREZ, P.E.**
**FLORIDA 51468**

SUBMITTAL DESCRIPTION / MILESTONE:

**BID SET**
**OCTOBER 21, 2016**

REVISIONS:

DRAWING SHEET INFORMATION

| | |
|---|---|
| BA PROJECT NO.: | 15019 |
| SCALE: | 1" = 30' |
| DATE: | |
| DRAWN BY: | KJO |
| CHECKED BY: | RPH |

DRAWING TITLE:
WATER AND SEWER PLAN

SHEET NO.
C-04

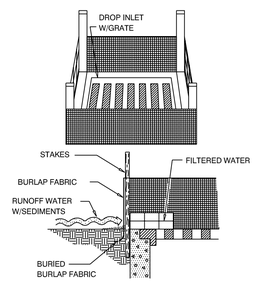


SPECIFIC APPLICATION

THIS METHOD OF INLET PROTECTION IS APPLICABLE WHERE THE INLET DRAINS A RELATIVELY FLAT NON PAVED AREA (SLOPES NO GREATER THAN 5%) WHERE SHEET OR OVERLAND FLOWS ( NOT EXCEEDING 0.5 CFS ) ARE TYPICAL. THE METHOD SHALL NOT APPLY TO INLETS RECEIVING CONCENTRATED FLOWS, SUCH AS ALONG ROADWAYS.

1 Drop Inlet Sediment Filter

NTS

NOTES:

1. ALL ROCK BAG BARRIERS MUST AGREE WITH THE NOTES ON PREVIOUS PAGE.

2. PLACE CURB TYPE ROCK BAG BARRIER ON GENTLY SLOPING STREET, WHERE WATER CAN POND AND ALLOW SEDIMENT TO SEPARATE FROM RUNNOFF.

3. BAGS OF WOVEN GEOTEXTILE FABRIC, FILLED WITH GRAVEL MUST BE LAYERED SUCH THAT NO GAPS ARE EVIDENT.

4. LEAVE ONE SANDBAG GAP IN THE TOP ROW ON THE SIDE AWAY FROM FLOW, TO PROVIDE A SPILLWAY; OR IN THE CENTER IF PONDING IS NEEDED ON BOTH SIDES.

5. INSPECT BARRIERS AND REMOVE SEDIMENT AFTER EACH STORM EVENT, SEDIMENT AND GRAVEL MUST BE REMOVED FROM THE TRAVELED WAY IMMEDIATELY

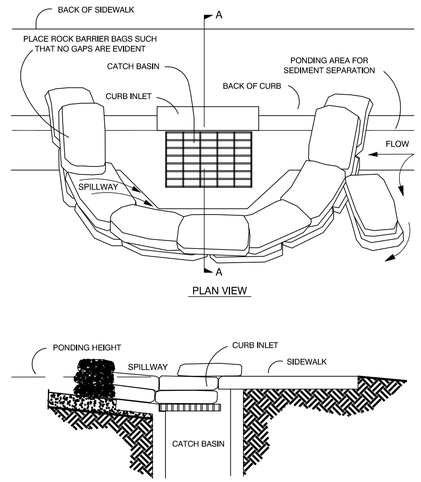


2 Silt Rock Bag Curb Inlet Filter

NTS

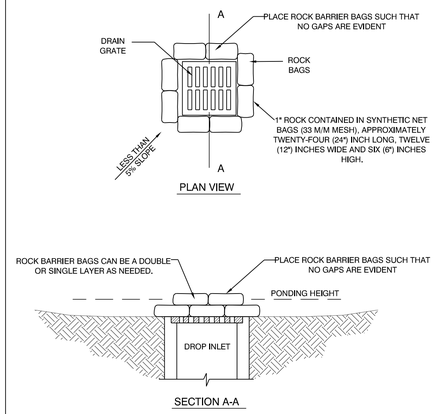


NOTES:

1. DROP INLET SEDIMENT BARRIERS ARE TO BE USED FOR SMALL, NEARLY LEVEL DRAINAGE AREAS. (LESS THAN 5%.)

2. A "REASONABLE" DESIGN SIZE PARTICLE TO CAPTURE MUST BE SELECTED.

3. SIZE DISTRIBUTION OF UPSTREAM SOIL PARTICLES MUST BE EVALUATED.

4. INFLOW AND OUTFLOW FROM THE SYSTEM FOR A SPECIFIC FREQUENCY STORM MUST BE KNOWN.

5. POND VOLUME IS DIRECTLY PROPORTIONAL TO THE DISCHARGE RATE OF WATER FROM THE SYSTEM.

6. POND VOLUME IS INVERSELY PROPORTIONAL TO THE MASS OF THE DESIGN SIZE SUSPENDED PARTICLE.

7. A SYSTEM MUST PROVIDE SUFFICIENT FLOW TO ALLOW FOR DEPOSITION OF DESIGN SIZE PARTICLES.

8. THE PONDING HEIGHT MUST BE WELL BELOW THE GROUND ELEVATION DOWNSLOPE TO PREVENT RUNNOFF FROM BYPASSING THE INLET. A TEMPORARY DIKE MAY BE NECESSARY ON THE DOWNSLOPE SIDE OF THE STRUCTURE.

3 Silt Rock Bag Drop Inlet Filter

NTS

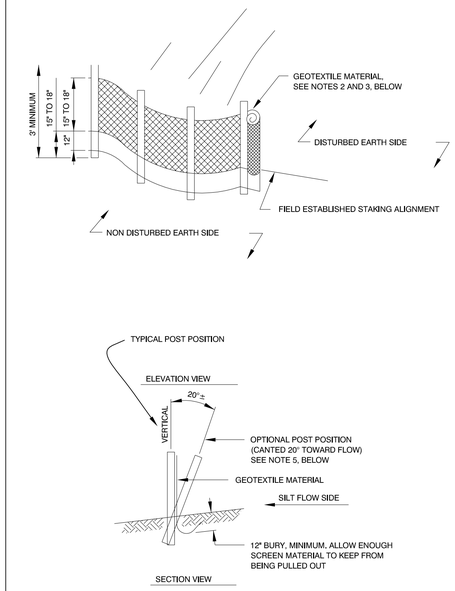


NOTES:
1. POST: 2"X2" WOOD, P.T. OR 2-1/2"Ø STEEL AT 6' CENTERS, MAXIMUM.
2. GEOTEXTILE: GRAB TENSILE AT 90 LBS, TRAPEZOIDAL TEAR AT 35 LBS., MULLEN BURST AT 180 PSI.
3. GEOTEXTILE MATERIAL SHALL BE BURIED IN THE GROUND A MINIMUM OF 12" AND BACK FILLED.
4. ALSO SEE FDOT INDEX 199, "GEOTEXTILE CRITERIA", EROSION CLASS.
5. OPTIONAL POST POSITION REQUIRED WHEN SLOPE IS GREATER THAN 1:2.

4 Staked Silt Barrier Detail

NTS

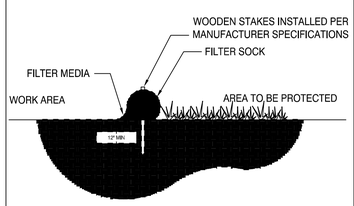


5 Filter Sock Detail

NTS

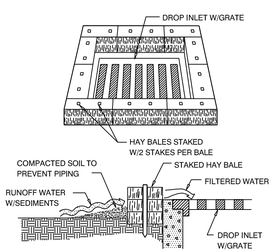


SPECIFIC APPLICATION

THIS METHOD OF INLET PROTECTION IS APPLICABLE WHERE THE INLET DRAINS A RELATIVELY FLAT AREA (SLOPES NO GREATER THAN 5%) WHERE SHEET OR OVERLAND FLOWS (NOT EXCEEDING 0.5 CFS) ARE TYPICAL. THE METHOD SHALL NOT APPLY TO INLETS RECEIVING CONCENTRATED FLOWS, SUCH AS ALONG ROADWAYS

6 Hay Bale Drop Inlet Filter

NTS

**ENVIRONMENTAL LAND USE CONTROLS NOTE:**
PRIOR TO ANY AND ALL CONSTRUCTION ACTIVITIES, THE CONTRACTOR IS RESPONSIBLE FOR VERIFYING IF LOCATION OF CONSTRUCTION ACTIVITIES ARE SUBJECT TO ENVIRONMENTAL LAND USE CONTROLS (LUC). ANY AND ALL ENCOUNTERED CONTAMINATED SOIL AND OR GROUNDWATER SHALL BE HANDLED PER THE "SOIL AND GROUND WATER MANAGEMENT PLAN", DATED FEBRUARY 13, 2015 INCLUDED IN THE PROJECT MANUAL. CONTRACTOR SHALL VERIFY THAT LUC CONSTRUCTION PERMIT HAS BEEN FILED AND APPROVED FOR THIS WORK.

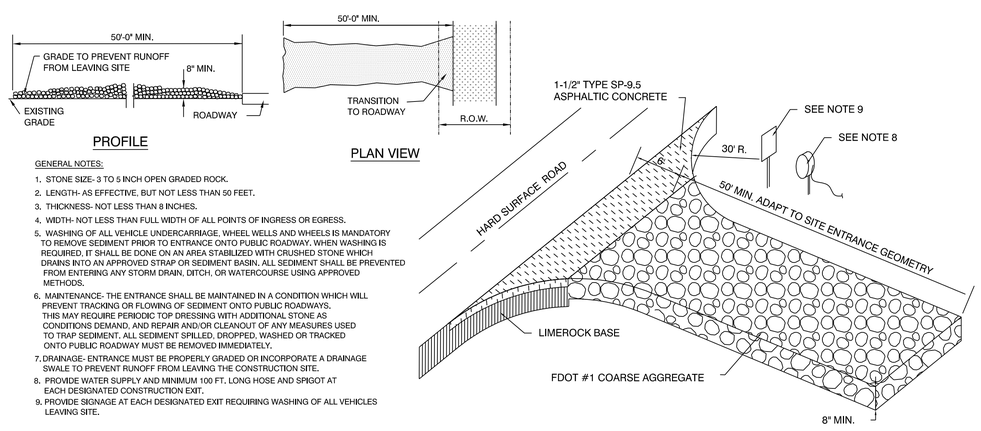


GENERAL NOTES:

1. STONE SIZE- 3 TO 5 INCH OPEN GRADED ROCK.
2. LENGTH- AS EFFECTIVE, BUT NOT LESS THAN 50 FEET.
3. THICKNESS- NOT LESS THAN 8 INCHES.
4. WIDTH- NOT LESS THAN FULL WIDTH OF ALL POINTS OF INGRESS OR EGRESS.
5. WASHING OF ALL VEHICLE UNDERCARRIAGE, WHEEL WELLS AND WHEELS IS MANDATORY TO REMOVE SEDIMENT PRIOR TO ENTRANCE ONTO PUBLIC ROADWAY. WHEN WASHING IS REQUIRED, IT SHALL BE DONE ON AN AREA STABILIZED WITH CRUSHED STONE WHICH DRAINS INTO AN APPROVED STRAP OR SEDIMENT BASIN. ALL SEDIMENT SHALL BE PREVENTED FROM ENTERING ANY STORM DRAIN, DITCH, OR WATERCOURSE USING APPROVED METHODS.
6. MAINTENANCE- THE ENTRANCE SHALL BE MAINTAINED IN A CONDITION WHICH WILL PREVENT TRACKING OR FLOWING OF SEDIMENT ONTO PUBLIC ROADWAYS. THIS MAY REQUIRE PERIODIC TOP DRESSING WITH ADDITIONAL STONE AS CONDITIONS DEMAND, AND REPAIR AND/OR CLEANOUT OF ANY MEASURES USED TO TRAP SEDIMENT. ALL SEDIMENT SPILLED, DROPPED, WASHED OR TRACKED ONTO PUBLIC ROADWAY MUST BE REMOVED IMMEDIATELY.
7. DRAINAGE- ENTRANCE MUST BE PROPERLY GRADED OR INCORPORATE A DRAINAGE SWALE TO PREVENT RUNOFF FROM LEAVING THE CONSTRUCTION SITE.
8. PROVIDE WATER SUPPLY AND MINIMUM 100 FT. LONG HOSE AND SPIGOT AT EACH DESIGNATED CONSTRUCTION EXIT.
9. PROVIDE SIGNAGE AT EACH DESIGNATED EXIT REQUIRING WASHING OF ALL VEHICLES LEAVING SITE.

7 Gravel Construction Entrance

NTS


BERMELLO AJAMIL & PARTNERS INC

Architecture • Engineering • Planning
Interior Design • Landscape Architecture
2601 South Bayshore Drive
Suite 1000
Miami, Florida 33133
(305) 859-2050
Fax (305) 860-3700


PREPARED FOR/OWNER:
**CITY OF KEY WEST, FL**
**P. O. BOX 1409**
**3140 FLAGLER AVENUE**
**KEY WEST, FL 33041**

PROJECT NAME:

# TRUMAN WATERFRONT PARK AMPHITHEATER

PROJECT LOCATION/ADDRESS:
**TRUMAN WATERFRONT PARK**

SUB-CONSULTANT INFORMATION:
***PEREZ ENGINEERING & DEVELOPMENT, INC.***

Certificate of Authorization No. 8579

1010 Kennedy Drive
Suite 201
Key West, Florida 33040
(305) 293-9440
Fax (305) 296-0243

PROFESSIONAL SEAL:

**ALLEN E. PEREZ, P.E.**
**FLORIDA 51468**

SUBMITTAL DESCRIPTION / MILESTONE:

**BID SET**
**OCTOBER 21, 2016**

REVISIONS:

DRAWING SHEET INFORMATION

| | |
|---|---|
| BA PROJECT NO.: | 15019 |
| SCALE: | N/A |
| DATE: | |
| DRAWN BY: | KJO |
| CHECKED BY: | RPH |

DRAWING TITLE:

CIVIL DETAILS

SHEET NO.

C-05

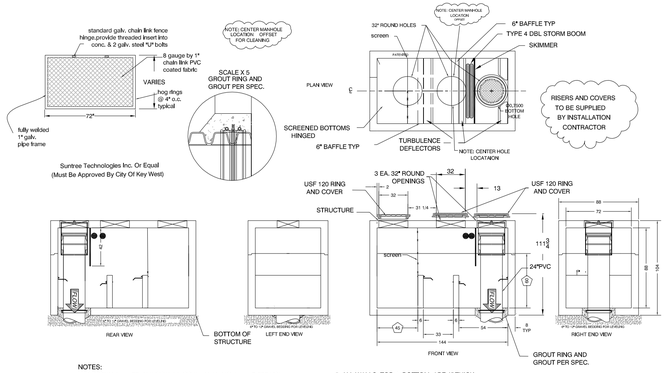


NOTES:

1. CONCRETE 28 DAY COMPRESSIVE STRENGTH fc=5,000 PSI.
2. REINFORCING: ASTM A-615, GRADE 60.
3. SUPPORTS AN H20 LOADING AS INDICATED BY AASHTO.
4. JOINT SEALANT: BUTYL RUBBER SS-S-00210
5. ALL WALLS, TOP + BOTTOM ARE 8" THICK.
6. STEEL EMBEDDED IN CONCRETE 3" MINIMUM FROM EDGE
7. GROUTING RING TO BE SUPPLIED BY INSTALL CONTRACTOR.
8. DIMENSIONS PENTAGON BLOCK ARE CRITICAL DIMENSIONS.
9. FRAMES & GRATE WHEN REQUIRED SHALL BE USF 4160-6611-GALVANIZED COATED

1 Typical Triple Chamber Baffle Box with Injection Well (Gravity)
NTS

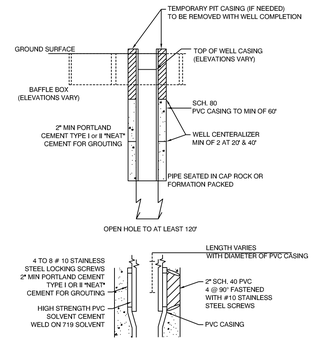


2 Stormwater Injection Well (Gravity)
NTS

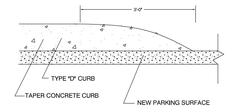


3 Tapered Curb Detail
NTS

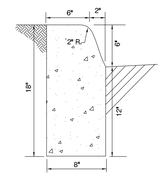


4 FDOT Type "D"
NTS

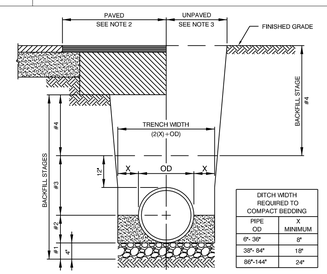


| DITCH WIDTH REQUIRED TO COMPACT BEDDING | |
|---|---|
| PIPE OD | X MINIMUM |
| 0"- 30" | 8" |
| 36"- 84" | 18" |
| 88"-144" | 24" |

| SCHEDULE | |
|---|---|
| STAGE | MATERIAL |
| #1 | BEDDING: WHERE DIRECTED GRANULAR MATERIAL (SAND, GRAVEL, OR RECLAIMED CONCRETE). W/WATERSTOP AT 100' INTERVALS. |
| #2 | PIPE BEDDING: LOCAL SAND |
| #3 | PIPE BACKFILL: LOCAL SAND TO 12" ABOVE TOP OF PIPE |
| #4 | TRENCH BACKFILL: PAVED ROADWAYS-IN 6" LIFTS UNPAVED ROADWAYS-IN 8" LIFTS GRASS SURFACE-IN 12" LIFTS |

NOTES:
1. ALL BACKFILL SHALL BE PLACED IN LIFTS AND COMPACTED AS PER SPECIFICATION.

5 Pipe Bedding Detail
NTS

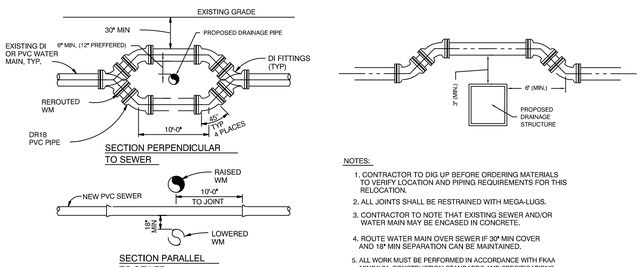


NOTES:

1. CONTRACTOR TO DIG UP BEFORE ORDERING MATERIALS TO VERIFY LOCATION AND PIPING REQUIREMENTS FOR THIS RELOCATION.
2. ALL JOINTS SHALL BE RESTRAINED WITH MEGA-LUGS.
3. CONTRACTOR TO NOTE THAT EXISTING SEWER AND/OR WATER MAIN MAY BE ENCASED IN CONCRETE.
4. ROUTE WATER MAIN OVER SEWER IF 30" MIN COVER AND 18" MIN SEPARATION CAN BE MAINTAINED.
5. ALL WORK MUST BE PERFORMED IN ACCORDANCE WITH FKAA MINIMUM CONSTRUCTION STANDARDS AND SPECIFICATIONS.
6. NO WORK SHALL BE PERFORMED ON ANY PORTION OF THE FKAA TRANSMISSION SYSTEM WITHOUT A REPRESENTATIVE OF THE FKAA PRESENT.

6 Water Main Conflict Details
NTS

LOCATION OF PUBLIC WATER SYSYEM MAINS IN ACCORDANCE WITH F.A.C. RULE 62-555.314

| Other Pipe | Horizontal Separation | Crossings (1) | Joint Spacing @Crossings (Full Joint Centered) |
|---|---|---|---|
| Storm Sewer, Stormwater Force Main, Reclaimed Water (2) | 3 ft. minimum | 12 inches is the minimum, except the storm sewer, then 6 inches is the minimum and 12 inches is preferred | Alternate 3 ft. minimum |
| Vacuum Sanitary Sewer | 10 ft. preferred 3 ft. minimum | 12 inches preferred 6 inches minimum | Alternate 3 ft. minimum |
| Gravity or Pressure Sanitary Sewer, Sanitary Sewer Force Main, Reclaimed Water (4) | 10 ft. preferred 6 ft. minimum (3) | 12 inches is the minimum, except for gravity sewer, then 6 inches is the minimum and 12 inches is preferred | Alternate 6 ft. minimum |
| On-Site Sewage Treatment & Disposal System | 10 ft. minimum | --- | --- |

(1) Water main should cross above other pipes. When water main must be below other pipe, the minimum separation is 12 inches.
(2) Reclaimed water regulated under Part III of Chapter 62-610, F.A.C.
(3) 3 ft. for gravity sanitary sewer where the bottom of the water main is laid at least 6 inches above the top of the gravity sanitary sewer.
(4) Reclaimed water not regulated under Part III of Chapter 62-610, F.A.C.

Disclaimer = This document is provided for your convenience only. Please refer to F.A.C. Rule 62-555.314 for additional construction requirements.

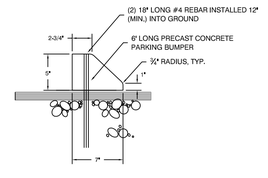


7 Concrete Parking Bumper Detail
NTS

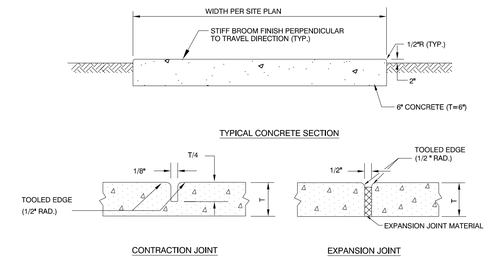


NOTES:

Materials and Construction shall conform to the requirements of Section 350 of FDOT Specifications.

8 Typical Driveway and Service Yard Detail
NTS

**ENVIRONMENTAL LAND USE CONTROLS NOTE:**
PRIOR TO ANY AND ALL CONSTRUCTION ACTIVITIES, THE CONTRACTOR IS RESPONSIBLE FOR VERIFYING IF LOCATION OF CONSTRUCTION ACTIVITIES ARE SUBJECT TO ENVIRONMENTAL LAND USE CONTROLS (LUC). ANY AND ALL ENCOUNTERED CONTAMINATED SOIL AND OR GROUNDWATER SHALL BE HANDLED PER THE "SOIL AND GROUND WATER MANAGEMENT PLAN", DATED FEBRUARY 13, 2015 INCLUDED IN THE PROJECT MANUAL. CONTRACTOR SHALL VERIFY THAT LUC CONSTRUCTION PERMIT HAS BEEN FILED AND APPROVED FOR THIS WORK.


BERMELLO AJAMIL & PARTNERS INC
Architecture • Engineering • Planning
Interior Design • Landscape Architecture
2601 South Bayshore Drive
Suite 1000
Miami, Florida 33133
(305) 859-2050
Fax (305) 860-3700


PREPARED FOR/OWNER:
**CITY OF KEY WEST, FL**
**P. O. BOX 1409**
**3140 FLAGLER AVENUE**
**KEY WEST, FL 33041**

PROJECT NAME:
**TRUMAN WATERFRONT PARK AMPHITHEATER**

PROJECT LOCATION/ADDRESS:
**TRUMAN WATERFRONT PARK**

SUB-CONSULTANT INFORMATION:
***PEREZ ENGINEERING & DEVELOPMENT, INC.***
Certificate of Authorization No. 8579
1010 Kennedy Drive
Suite 201
Key West, Florida 33040
(305) 293-9440
Fax (305) 296-0243

PROFESSIONAL SEAL:
**ALLEN E. PEREZ, P.E.**
**FLORIDA 51468**

SUBMITTAL DESCRIPTION / MILESTONE:
**BID SET**
**OCTOBER 21, 2016**

REVISIONS:

DRAWING SHEET INFORMATION
BA PROJECT NO.: 15019
SCALE: N/A
DATE:
DRAWN BY: KJO
CHECKED BY: RPH

DRAWING TITLE:
CIVIL DETAILS

SHEET NO.
C-06

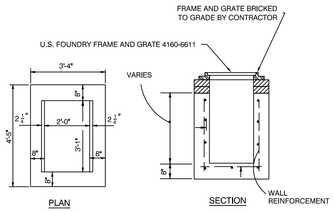


NOTES:

1. CONCRETE SHALL BE 4000 PSI AT 28 DAYS, TYPE II CEMENT
2. ALL REINFORCEMENT MAY BE WELDED WIRE AS PER ASTM C-478, #4 @ 12" O.C.E.W.
3. FRAME AND GRATE BRICKED TO GRADE BY CONTRACTOR.
4. BOTTOM INLETS SHALL BE USP PRODUCT NO. 3-3 OR EQUAL.
5. STRUCTURES TO BE SET ON COARSE AGGREGTE BEDDING

1 FDOT Ditch Bottom Inlet Type "C"
NTS

NOTES:

1. CONTRACTOR SHALL PROVIDE AN ADEQUATE SUPPLY OF 22 1/2°, 45° AND 6" WYES BENDS TO MEET VARYING FIELD CONDITIONS.
2. LENGTH OF SERVICE PIPE VARIES AT EACH SERVICE CONNECTION AND SHALL BE PROVIDED AS REQUIRED TERMINATE SERVICE AT LOCATION DIRECTED BY THE ENGINEER.
3. INSTALL MULTIPLE METER BOXES AS REQUIRED TO BRING TO GRADE.
4. IF SERVICE PIPE MATERIAL IS NOT THE SAME AS SEWER MAIN, CONNECTION SHALL BE APPROVED PRIOR TO CONSTRUCTION.
5. CONNECT AT TRENCH WALL OR AT SERVICE CONNECTION AT SEWER MAIN, AS DIRECTED BY THE ENGINEER.
6. WHERE ADEQUATE SEPARATION BETWEEN WATER MAIN AND SEWER LATERAL CANNOT BE PROVIDED INSTALL 8" SDR 35 SLEEVE AS DIRECTED BY THE ENGINEER.
7. FOR SERVICE CONNECTION REPAIRS: CONTRACTOR SHALL REPLACE A MINIMUM OF 6 LF OF OF 6 " PVC AND/OR FITTINGS AS REQUIRED.
8. ALL NEW CLEAN OUTS INSTALLED THAT ARE NOT IN CITY CONCRETE SIDEWALKS SHALL HAVE A 4" THICK CONCRETE COLLAR.

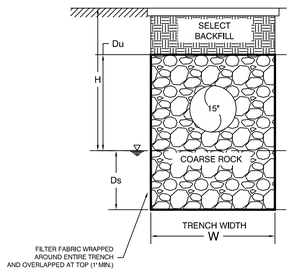


2 Exfiltration Trench Detail
NTS

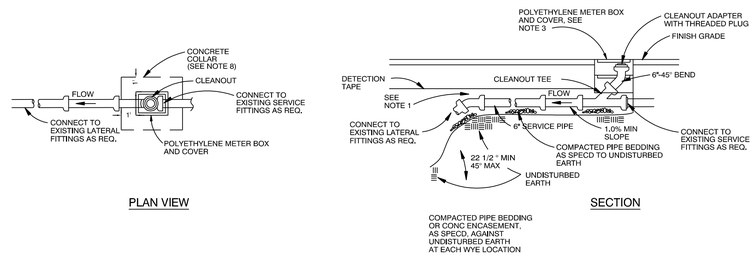


3 Typical Sewer Service Connection
NTS

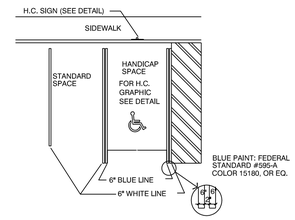


4 Handicap Parking Details
NTS

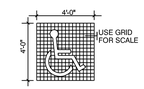


NOTES:
ALL LETTERS ARE 1" SERIES "C".
TOP PORTION OF SIGN SHALL HAVE A REFLECTORIZED BLUE BACKGROUND WITH WHITE REFLECTORIZED LEGEND & BORDER.

BOTTOM PORTION OF SIGN SHALL HAVE A REFLECTORIZED WHITE BACKGROUND WITH BLACK OPAQUE LEGEND & BORDER.

5 Handicap Graphic Details
NTS

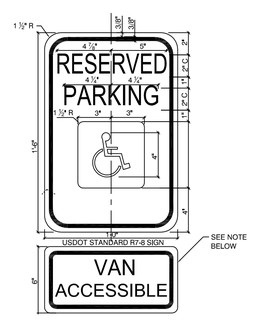


NOTE (R7-8 SIGN): THIS IS A STANDARD SIGN AND MAY BE ORDERED FROM TRAFFIC SIGN SUPPLIER BY NUMBER. THE SIGN MUST BE SUPPLEMENTED WITH A "VAN ACCESSIBLE" SIGN AS APPLICABLE AND/OR AMOUNT OF THE FINE FOR ILLEGALLY PARKING IN THE RESERVED SPACE(S) A MUNICIPALITY MAY IMPOSE. CONFIRM WITH LOCAL REGULATIONS.

6 Accessibility Signage
NTS

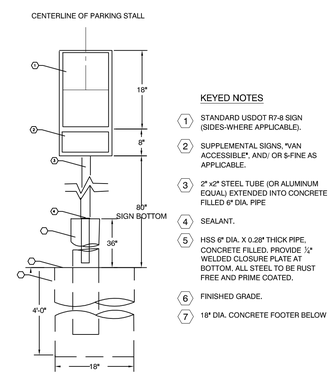


KEYED NOTES

1. STANDARD USDOT R7-8 SIGN (SIDES-WHERE APPLICABLE).
2. SUPPLEMENTAL SIGNS, "VAN ACCESSIBLE", AND/ OR 8-FINE AS APPLICABLE.
3. 2" x2" STEEL TUBE (OR ALUMINUM EQUAL) EXTENDED INTO CONCRETE FILLED 6" DIA. PIPE
4. SEALANT.
5. HSS 6" DIA. X 0.28" THICK PIPE, CONCRETE FILLED. PROVIDE ¼" WELDED CLOSURE PLATE AT BOTTOM. ALL STEEL TO BE RUST FREE AND PRIME COATED.
6. FINISHED GRADE.
7. 18" DIA. CONCRETE FOOTER BELOW

7 Accessibile Parking Sign and Post
NTS

**ENVIRONMENTAL LAND USE CONTROLS NOTE:**
PRIOR TO ANY AND ALL CONSTRUCTION ACTIVITIES, THE CONTRACTOR IS RESPONSIBLE FOR VERIFYING IF LOCATION OF CONSTRUCTION ACTIVITIES ARE SUBJECT TO ENVIRONMENTAL LAND USE CONTROLS (LUC). ANY AND ALL ENCOUNTERED CONTAMINATED SOIL AND OR GROUNDWATER SHALL BE HANDLED PER THE "SOIL AND GROUND WATER MANAGEMENT PLAN", DATED FEBRUARY 13, 2015 INCLUDED IN THE PROJECT MANUAL. CONTRACTOR SHALL VERIFY THAT LUC CONSTRUCTION PERMIT HAS BEEN FILED AND APPROVED FOR THIS WORK.


BERMELLO AJAMIL & PARTNERS INC

Architecture • Engineering • Planning
Interior Design • Landscape Architecture
2601 South Bayshore Drive
Suite 1000
Miami, Florida 33133
(305) 859-2050
Fax (305) 860-3700


PREPARED FOR/OWNER:
**CITY OF KEY WEST, FL**
**P. O. BOX 1409**
**3140 FLAGLER AVENUE**
**KEY WEST, FL 33041**

PROJECT NAME:

# TRUMAN WATERFRONT PARK AMPHITHEATER

PROJECT LOCATION/ADDRESS:
**TRUMAN WATERFRONT PARK**

SUB-CONSULTANT INFORMATION:
***PEREZ ENGINEERING & DEVELOPMENT, INC.***

Certificate of Authorization No. 8579

1010 Kennedy Drive
Suite 201
Key West, Florida 33040
(305) 293-9440
Fax (305) 296-0243

PROFESSIONAL SEAL:

**ALLEN E. PEREZ, P.E.**
**FLORIDA 51468**

SUBMITTAL DESCRIPTION / MILESTONE:

**BID SET**
**OCTOBER 21, 2016**

REVISIONS:

DRAWING SHEET INFORMATION

| | |
|---|---|
| BA PROJECT NO.: | 15019 |
| SCALE: | N/A |
| DATE: | |
| DRAWN BY: | KJO |
| CHECKED BY: | RPH |

DRAWING TITLE:

CIVIL DETAILS

SHEET NO.

C-07

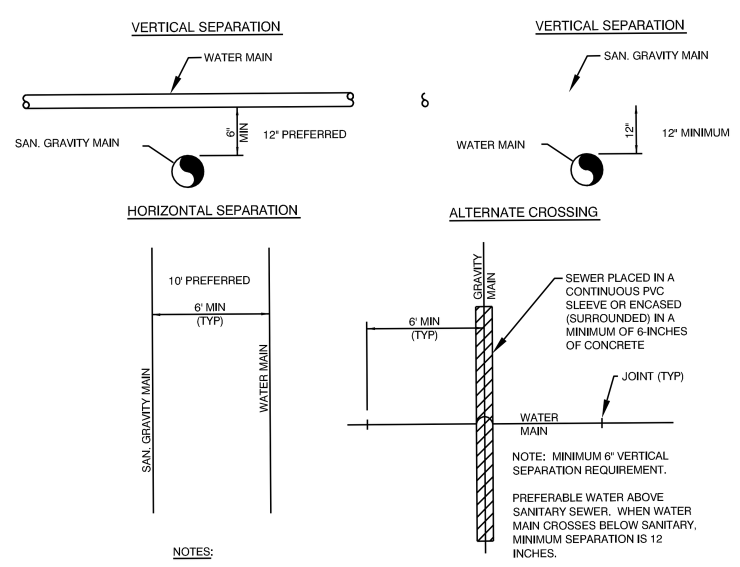


NOTES:

1. SANITARY SEWER GRAVITY MAINS CROSSING UNDER WATER MAINS, MUST MEET THE REQUIREMENTS OF VERTICAL SEPARATION.
2. SANITARY SEWER GRAVITY MAINS CROSSING OVER WATER MAINS, MUST MAINTAIN A MINIMUM VERTICAL SEPARATION OF 12-INCHES (BETWEEN THE INVERT OF THE UPPER PIPE AND THE CROWN OF THE LOWER PIPE), AND MEET THE REQUIREMENTS OF ALTERNATE CROSSING.

**1 Sanitary Gravity Sewer and Water Main Separation Distances**
NTS

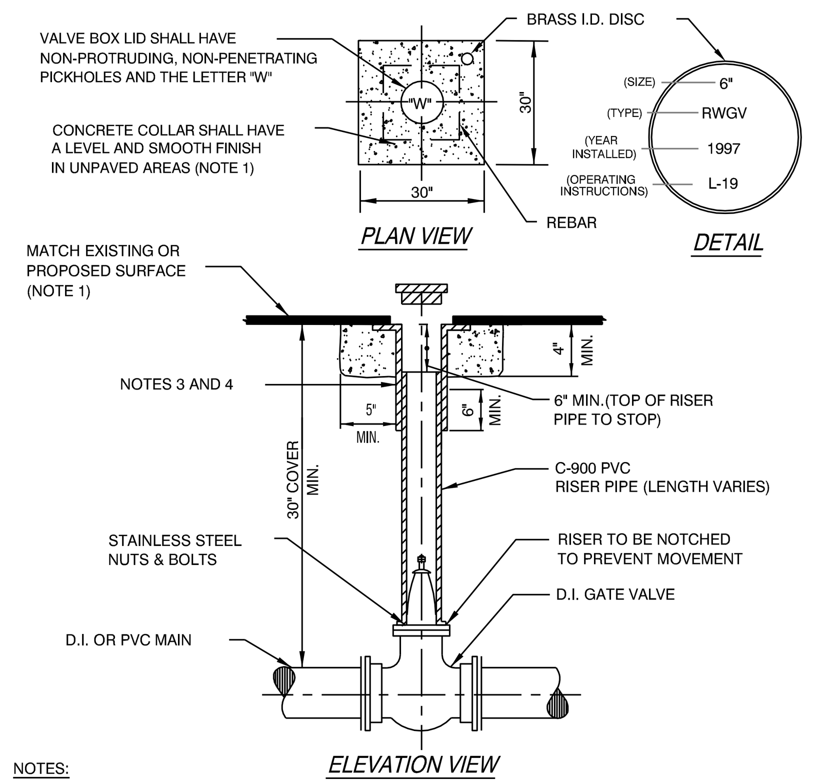


NOTES:

1. CONCRETE COLLAR ALSO MAY BE FORMED AS A 30" DIA. CIRCLE UNDER PAVEMENT.
2. IN UNPAVED AREA INSTALL VALVE BOX LID 1/2" ABOVE SURFACE. #5 REBAR SHALL BE REQUIRED.
3. U.S.F. No. 7615 OR APPROVED EQUAL WITH 6" DIA. RISER FOR VALVES 6" DIA. OR SMALLER.
4. U.S.F. No. 7630 OR APPROVED EQUAL WITH 10" DIA. RISER FOR VALVES 8" DIA. OR LARGER.
5. RESTRAIN AS REQUIRED PER DETAIL NO. 4.

**2 Gate Valve and Box**
NTS

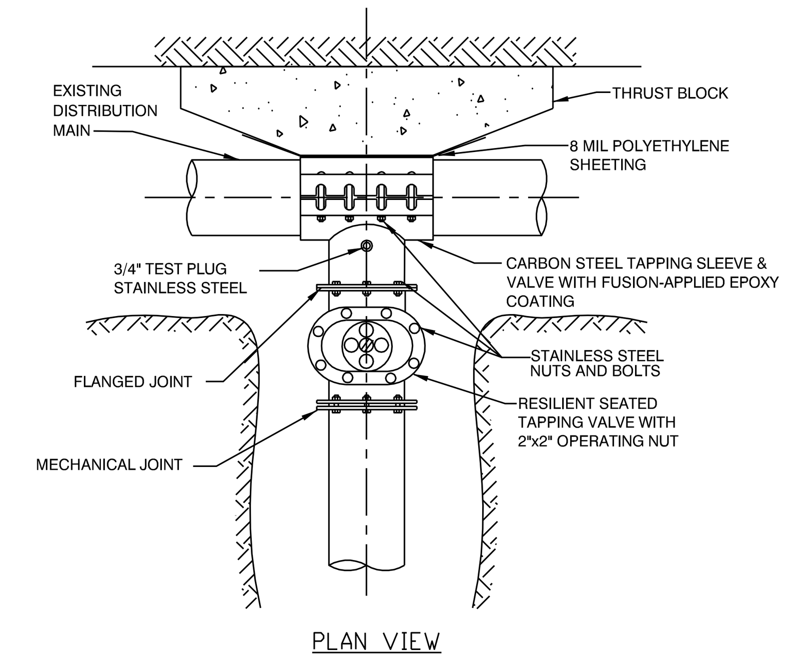


NOTES:

1. PRESSURE TEST INSTALLED TAPPING SLEEVE AND VALVE ASSEMBLY BEFORE TAPPING EXISTING MAIN. SEE FKAA MINIMUM CONSTRUCTION STANDARDS & SPECIFICATIONS.
2. SEE FKAA MINIMUM CONSTRUCTION STANDARDS & SPECIFICATIONS FOR LIST OF APPROVED TAPPING SLEEVES AND VALVES.
3. ALL TAPS SHALL BE MADE WITH AN APPROVED TAPPING DEVICE.

**3 Tapping Sleeve and Valve**
NTS

PVC PIPE RESTRAINT JOINT SCHEDULE

LENGTH (L) TO BE RESTRAINED

| NOMINAL PIPE SIZE (IN.) | HORIZONTAL BENDS 90° BENDS L(FT.) | 45° BENDS L(FT.) | 22.5° BENDS L(FT.) | 11.25° BENDS LR(FT.) | VERTICAL OFFSETS 45° BENDS (SEE NOTE 4) LU(FT.) | LI(FT.) | VALVES OR DEAD-ENDS L(FT.) |
|---|---|---|---|---|---|---|---|
| 4 | 20 | 8 | 4 | 2 | 20 | 3 | 50 |
| 6 | 28 | 10 | 5 | 2 | 28 | 4 | 70 |
| 8 | 36 | 14 | 6 | 3 | 36 | 5 | 90 |
| 10 | 40 | 18 | 8 | 4 | 45 | 6 | 110 |
| 12 | 50 | 20 | 9 | 4 | 52 | 8 | 120 |
| 14 | 56 | 23 | 10 | 5 | 60 | 9 | 140 |
| 16 | 60 | 26 | 11 | 6 | 67 | 10 | 160 |
| 18 | 69 | 29 | 12 | 6 | 74 | 12 | 180 |
| 20 | 75 | 32 | 13 | 7 | 80 | 13 | 195 |
| 24 | 76 | 33 | 15 | 7 | 81 | 14 | 200 |
| 30 | 88 | 36 | 18 | 9 | 97 | 16 | 235 |
| 36 | 100 | 40 | 20 | 10 | 110 | 20 | 270 |
| 42 | 115 | 48 | 23 | 11 | 125 | 24 | 300 |
| 48 | 125 | 52 | 25 | 12 | 140 | 30 | 340 |

| REDUCERS (SIZE) | L FT. |
|---|---|
| 6 X 4 | 35 |
| 8 X 6 | 35 |
| 8 X 4 | 65 |
| 10 X 8 | 35 |
| 10 X 6 | 65 |
| 12 X 10 | 35 |
| 12 X 8 | 65 |
| 16 X 12 | 65 |
| 16 X 10 | 95 |
| 20 X 18 | 35 |
| 20 X 16 | 65 |
| 20 X 12 | 120 |
| 24 X 20 | 65 |
| 24 X 18 | 95 |
| 24 X 16 | 120 |
| 30 X 24 | 80 |
| 30 X 20 | 150 |
| 36 X 30 | 80 |
| 36 X 24 | 150 |
| 42 X 36 | 80 |
| 42 X 30 | 150 |
| 48 X 42 | 80 |
| 48 X 36 | 150 |

| TEES (NOTE 5) RUN SIZE | BRANCH SIZE | L FT. |
|---|---|---|
| 4" | 4" | F.O. |
| 6" | 6" | 10 |
| | 4"<LESS | F.O. |
| 8" | 8" | 30 |
| | 6"<LESS | F.O. |
| 10" | 10" | 48 |
| | 8" | 14 |
| | 6"<LESS | F.O. |
| 12" | 12" | 65 |
| | 10" | 35 |
| | 8"<LESS | F.O. |
| 16" | 16" | 100 |
| | 12" | 40 |
| | 10"<LESS | F.O. |
| 20" | 20" | 130 |
| | 16" | 80 |
| | 12"<LESS | F.O. |
| 24" | 24" | 130 |
| | 20" | 90 |
| | 16" | 40 |
| | 12"<LESS | F.O. |
| 30" | 30" | 140 |
| | 24" | 80 |
| | 20" | 50 |
| | 16"<LESS | F.O. |
| 36" | 36" | 180 |
| | 30" | 120 |
| | 24" | 50 |
| | 20"<LESS | F.O. |
| 42" | 42" | 220 |
| | 36" | 160 |
| | 30" | 80 |
| | 24" | 40 |
| | 20"<LESS | F.O. |
| 48" | 48" | 250 |
| | 42" | 180 |
| | 36" | 90 |
| | 30" | 40 |
| | 24"<LESS | F.O. |

F.O. = FITTING ONLY

PVC PIPE RESTRAINT NOTES

1. THIS SCHEDULE SHALL BE UTILIZED ON ALL WATER, SEWER FORCE MAIN OR RECLAIMED WATER SYSTEMS. ALL FITTINGS SHALL BE RESTRAINED TO LENGTHS INDICATED ON THE ABOVE SCHEDULE, AT A MINIMUM.
2. ASSUMPTIONS: PVC PIPE, SAFETY FACTOR = 1.5, TEST PRESSURE = 150 PSI, SOIL = GM OR SM, TRENCH TYPE 3, DEPTH OF COVER = 36".
3. BENDS AND VALVES: SHALL BE RESTRAINED ON EACH SIDE OF FITTING.
4. VERTICAL OFFSETS: ARE APPROX. 3 FEET COVER ON TOP AND APPROX. 8 FEET COVER ON BOTTOM. PER THE DETAILS, LU IS THE RESTRAINED LENGTH FOR THE UPPER (TOP) LEVEL. LI IS THE RESTRAINED LENGTH FOR THE LOWER (DEEPER) LEVEL. ASSUME 45 DEGREE BENDS.
5. TEES: TOTAL LENGTH BETWEEN FIRST JOINTS OR RESTRAINED LENGTH ON EITHER SIDE OF TEE (RUN) SHALL BE A TOTAL DISTANCE OF 30 FEET (MIN) SEE SCHEDULE ABOVE FOR RESTRAINT LENGTH ON TEE "BRANCH" LINE.
6. HDPE TO PVC TRANSITIONS: THE PVC PIPE SIDE SHALL BE RESTRAINED 35 FEET (MIN.).

**4 Restrained Joint Distances**
NTS

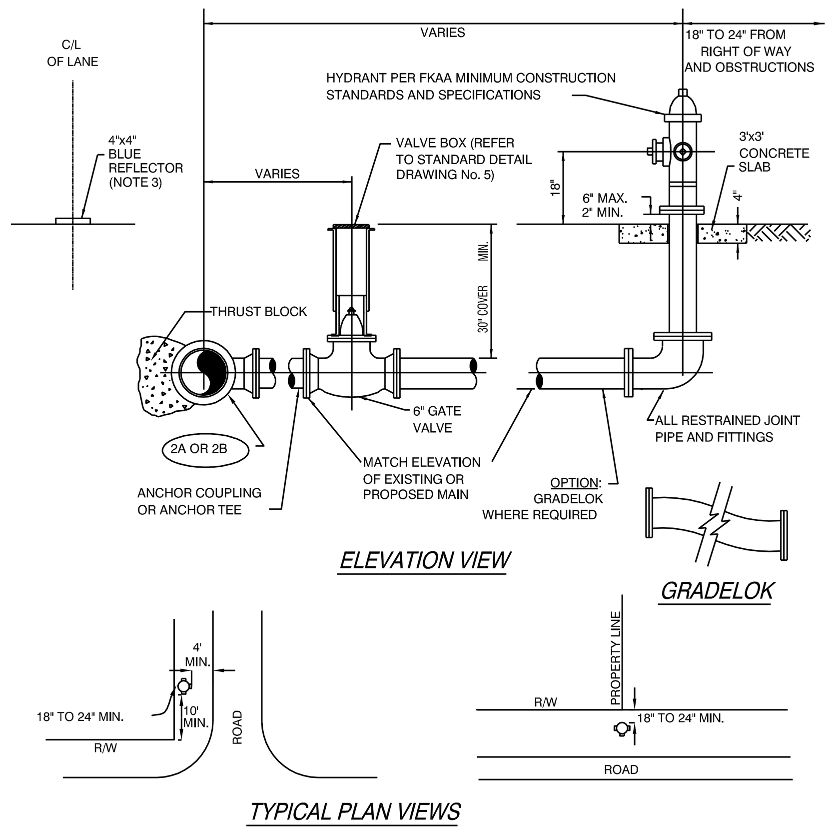


NOTES:

1. CONCRETE SLAB MAY BE ELIMINATED IN AREAS WHERE SIDEWALK IS INSTALLED PRIOR TO FINAL ACCEPTANCE OF THE HYDRANT.

2A. TAPPING SLEEVE AND VALVE USED WHEN EXISTING LINE IS HOT.

2B. TEE-USED WHEN LINE IS NEW.

3. INSTALL 2-SIDED BLUE REFLECTORS WITH BUTYL PADS. INSTALL IN THE CENTER OF THE LANE ON THE SIDE OF HYDRANT INSTALLATION.

**5 Hydrant Assembly Installation**
NTS

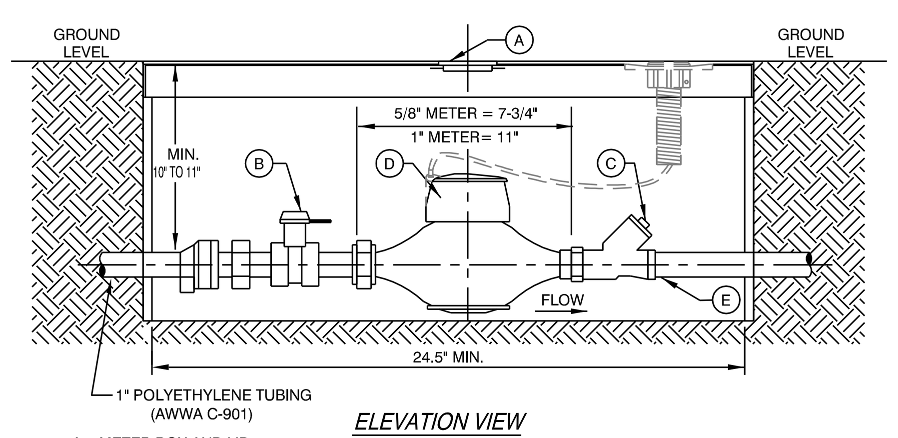


A= METER BOX AND LID
BOX-OLDCASTLE PRECAST #02001032-FL12T FIBRELYTE GRAY COMPOSITE BOX (W/MOUSE HOLES)
LID-OLDCASTLE PRECAST #02001381-FL12 LID(1118)FIBRELYTE GRAY COMPOSITE NEPTUNE OFFSET-PROBE PROVISION FKAA WATER

*NOTE: METER BOXES MUST HAVE LIDS IN PLACE PRIOR TO POURING THE CONCRETE.*

B= FORD LOCKABLE CURB STOP OR APPROVED EQUAL

| METER DIAMETER | CURB STOP |
|---|---|
| 3/4" x 5/8" | No. B43-342 W * |
| 1" | No. B43-344 W * |

* "W" ON CATALOG NUMBER IS FOR PADLOCK WINGS & SHOULD OPEN TO THE LEFT.

C= FKAA APPROVED DUAL CHECK VALVE: MUELLER No. H-14242 OR FORD HHS 31-323, HHS 31-344, 0R APPROVED EQUAL
IF DOWNSTREAM BACKFLOW PREVENTOR (RPZ OR DCVA) IS REQUIRED, CURB STOP SHOULD BE INSTALLED IN LIEU OF DUAL CHECK.

D= SEALED REGISTER WATER METER

E= CUSTOMER TIE-IN POINT

NOTE:

1. MINIMUM DISTANCES BETWEEN METER INLETS/OUTLETS AND THE CLOSEST FITTINGS SHALL BE MAINTAINED PER METER MANUFACTURER'S REQUIREMENTS.

**6 5/8" & 1" Meter w/ Dual Check Valve**
NTS

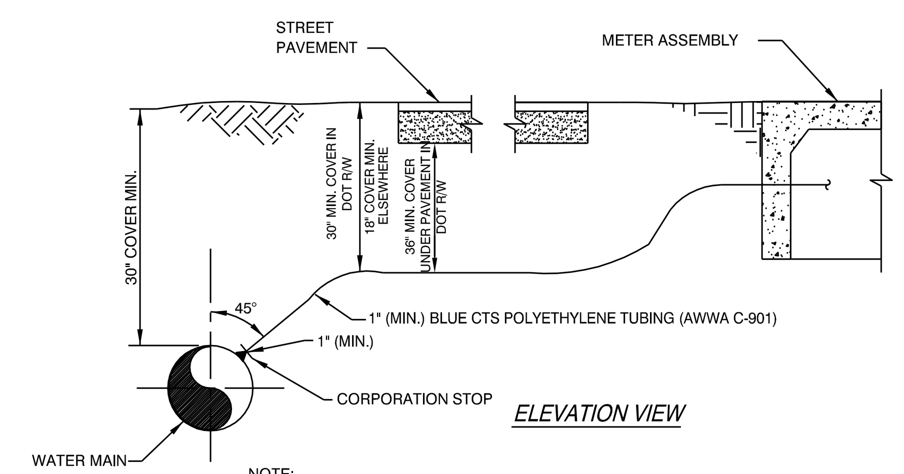


NOTE:

1. SADDLES SHALL BE ROCKWELL INTERNATIONAL, TYPE 323, STYLE DOUBLE STRAP BRONZE SADDLES, FOR PVC AND DUCTILE IRON PIPE, OR APPROVED EQUAL. TAPPING SADDLES SHALL BE USED FOR ALL TAPS ON 2" PVC PIPE. 4" PVC PIPE OR GREATER SHALL HAVE A TAPPING SLEEVE AND VALVE.
2. CORPORATION STOPS SHALL BE FORD F-1000, FB-1000, OR APPROVED EQUAL. THE LARGEST CORPORATION STOP WHICH CAN BE TAPPED DIRECTLY INTO THE PIPE IS 1-INCH.

**7 Service Connection Detal**
NTS

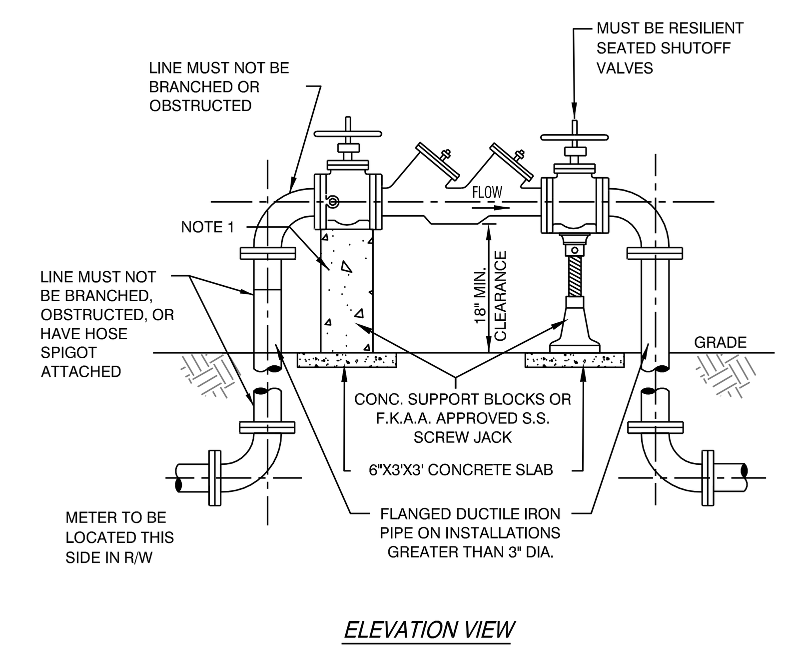


NOTES:

1. CONCRETE SUPPORT BLOCKS REQUIRED ON 2 1/2" AND LARGER DOUBLE CHECK VALVES.
2. THE DEVICE MUST BE INSTALLED WITH MINIMUM HORIZONTAL CLEARANCES OF 30" FOR THE SIDE WITH TEST COCKS AND 8" FOR BACK SIDE.
3. ASSEMBLY IS NOT COMPLETE UNLESS ALL TEST COCKS ARE INSTALLED PER MANUFACTURER'S SPECIFICATIONS.
4. ACCEPTABLE ASSEMBLIES ARE THOSE THAT ARE APPROVED BY EITHER ASSE OR FCCCHR AND MEET THE MINIMUM DESIGN STANDARDS OF THE AWWA.

**8 2.5" to 10" RPDA Installation**
NTS

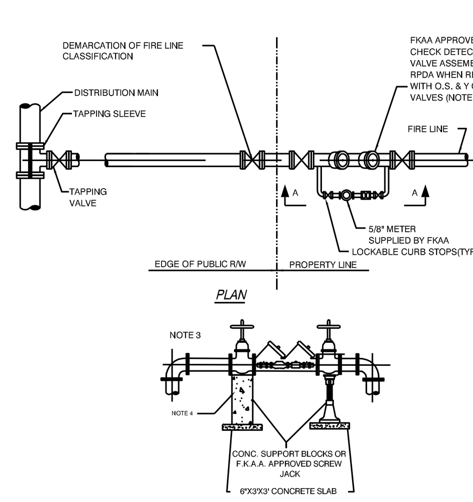


NOTES:

1. REFER TO FKAA CROSS-CONNECTION CONTROL MANUAL AND FIRE PROTECTION SERVICE REQUIREMENTS IN FKAA MINIMUM CONSTRUCTION STANDARDS AND SPECIFICATIONS.
2. "Y" STRAINER NOT PERMITTED ON SEPARATE FIRE LINE.
3. REFER TO STANDARD DETAIL DRAWING No. 20, 21 or 22 FOR INSTALLATION DETAILS.
4. CONCRETE SUPPORT BLOCKS REQUIRED ON 2-1/2" AND LARGER DOUBLE CHECK VALVES.

**9 Separate Fire Line Installation**
NTS

**ENVIRONMENTAL LAND USE CONTROLS NOTE:**
PRIOR TO ANY AND ALL CONSTRUCTION ACTIVITIES, THE CONTRACTOR IS RESPONSIBLE FOR VERIFYING IF LOCATION OF CONSTRUCTION ACTIVITIES ARE SUBJECT TO ENVIRONMENTAL LAND USE CONTROLS (LUC). ANY AND ALL ENCOUNTERED CONTAMINATED SOIL AND OR GROUNDWATER SHALL BE HANDLED PER THE "SOIL AND GROUND WATER MANAGEMENT PLAN", DATED FEBRUARY 13, 2015 INCLUDED IN THE PROJECT MANUAL. CONTRACTOR SHALL VERIFY THAT LUC CONSTRUCTION PERMIT HAS BEEN FILED AND APPROVED FOR THIS WORK.


BERMELLO AJAMIL & PARTNERS INC
Architecture • Engineering • Planning
Interior Design • Landscape Architecture
2601 South Bayshore Drive
Suite 1000
Miami, Florida 33133
(305) 859-2050
Fax (305) 860-3700


PREPARED FOR/OWNER:
**CITY OF KEY WEST, FL**
**P. O. BOX 1409**
**3140 FLAGLER AVENUE**
**KEY WEST, FL 33041**

PROJECT NAME:
**TRUMAN WATERFRONT PARK AMPHITHEATER**

PROJECT LOCATION/ADDRESS:
**TRUMAN WATERFRONT PARK**


SUB-CONSULTANT INFORMATION:
***PEREZ ENGINEERING & DEVELOPMENT, INC.***
Certificate of Authorization No. 8579
1010 Kennedy Drive
Suite 201
Key West, Florida 33040
(305) 293-9440
Fax (305) 296-0243


PROFESSIONAL SEAL:

**ALLEN E. PEREZ, P.E.**
**FLORIDA 51468**

SUBMITTAL DESCRIPTION / MILESTONE:

**BID SET**
**OCTOBER 21, 2016**

REVISIONS:

DRAWING SHEET INFORMATION
BA PROJECT NO.: 15019
SCALE: N/A
DATE:
DRAWN BY: KJO
CHECKED BY: RPH

DRAWING TITLE:
# CIVIL DETAILS

SHEET NO.
# C-08