PROJECT MANUAL FOR:

ITB BID No.: 17-009
TRUMAN WATERFRONT PARK AMPHITHEATER

OCTOBER 2016

MAYOR: CRAIG CATES

COMMISSIONERS:

SAM KAUFMAN

BILLY WARDLOW

JIMMY WEEKLEY

CLAYTON LOPEZ

RICHARD PAYNE

MARGARET ROMERO

PREPARED FOR:
City Of Key West
Engineering Services

CITY OF KEY WEST

KEY WEST, FLORIDA

CONTRACT DOCUMENTS

for

TRUMAN WATERFRONT PARK AMPHITHEATER

****

****

KEY WEST, FLORIDA

OCTOBER 2016

ITB BID No.: 17-009

INFORMATION TO BIDDERS

SUBJECT:	INVITATION TO BID No. 17-009: TRUMAN WATERFRONT PARK AMPHITHEATER
ISSUE DATE:	NOVEMBER 6, 2016
MAIL OR SPECIAL DELIVERY REPONSES TO:	CITY CLERK'S OFFICE CITY OF KEY WEST 1300 WHITE STREET KEY WEST, FL 33040
DELIVER BIDS TO:	SAME AS ABOVE
BIDS MUST BE RECEIVED:	DECEMBER 14, 2016
NOT LATER THAN:	3:30 P.M. LOCAL TIME

SUE SNIDER
PURCHASING AGENT
CITY OF KEY WEST

TABLE OF CONTENTS

Page No

PART 1 - BIDDING REQUIREMENTS

INVITATION TO BID 1
INSTRUCTIONS TO BIDDER 3
PROPOSAL 11
FLORIDA BID BOND 20
ANTI – KICKBACK AFFIDAVIT 23
FLORIDA STATUTES, ON PUBLIC ENTITY CRIMES 24
INDEMNIFICATION FORM 27
LOCAL VENDOR CERTIFICATION 28
DOMESTIC PARTNERSHIP AFFIDAVIT 29
CONE OF SILENCE AFFIDAVIT 30
BIDDER'S CHECKLIST 31

PART 2 - CONTRACT FORMS

CONTRACT 33
FLORIDA PERFORMANCE BOND 35
FLORIDA PAYMENT BOND 37

PART 3 - CONDITIONS OF THE CONTRACT

GENERAL CONDITIONS OF THE CONTRACT 40
SUPPLEMENTARY CONDITIONS 59

PART 4 - GROUNDWATER AND SOIL MANAGEMENT PLAN

PART 5 - REPORT OF GEOTECHNICAL EXPLORATION

PART 6 - TECHNICAL SPECIFICATIONS

PART 7 - CONSTRUCTION DRAWINGS

PART 8 - SCHEDULE OF VALUES

PRIOR TO ANY AND ALL CONSTRUCTION ACTIVITIES, THE CONTRACTOR IS RESPONSIBLE FOR VERIFYING IF LOCATION OF CONSTRUCTION ACTIVITIES ARE SUBJECT TO ENVIRONMENTAL LAND USE CONTROLS (LUC). ANY AND ALL ENCOUNTERED CONTAMINATED SOIL AND OR GROUNDWATER SHALL BE HANDLED PER THE "SOIL AND GROUND WATER MANAGEMENT PLAN", DATED FEBRUARY 13, 2015 INCLUDED IN THE PROJECT MANUAL. CONTRACTOR SHALL VERIFY THAT LUC CONSTRUCTION PERMIT HAS BEEN FILED AND APPROVED FOR THIS WORK.

PART 1

BIDDING REQUIREMENTS

INVITATION TO BID

Sealed bids for the City of Key West ITB No.17-009 TRUMAN WATERFRONT PARK AMPHITHEATER, addressed to the City of Key West, will be received at the Office of the City Clerk, 1300 White Street, Key West Florida, 33040 until 3:30 pm on December 14, 2016 and then will be publicly opened and read. Any bids received after the time and date specified will not be considered.

Please submit one (1) one original and (2) two flash drives with one single PDF file of the entire bid package. Bid package is to be enclosed in a sealed envelope, clearly marked on the outside "BID FOR TRUMAN WATERFRONT PARK AMPHITHEATER ITB No. 17-009" addressed and delivered to the City Clerk at the address noted above.

The project includes, but is not limited to, the management and disposal of encountered contaminated soil, site work (including a curved berm and use of stockpiled soil), utility work (demolition, relocation and new work), construction of an amphitheater (stage, back wall, columns, roof and associated stairs and ramps) back of house and loading / service area, pre-engineered / pre-manufactured bathroom facility, roadways, ADA parking spaces across the street, sidewalks, pedestrian paths, site lighting, landscape and irrigation.

The overall vision of the Truman Waterfront Park Amphitheater is to create a one of a kind experience for both performers and audience for a variety of outdoor events & venues for both the residence of Key West and tourists alike. The Amphitheater is designed to offer a wide range of small performances from local to traveling / out of town venues / events year round. The design includes a dynamic elliptical structure that is carefully integrated into the parks landscape and shaped terrain, open seating areas and curved berm so that building and landscape become one.

The elliptical shaped one story amphitheater building houses a covered stage below an elliptical roof that overhands beyond the stage supported by a ring of steel beams with an integrated curved backdrop wall and ring bands to accommodate stage equipment brought by bands / events. The stage is 4 feet above grade and the overall roof structure is 23 feet above the stage. Directly in front of the stage is a concrete area to accommodate movable seating. The building fronts a series of open seating lawns which is bounded by a curved landscaped berm. Integrated into the lawns are concrete sidewalk / pathways and dedicated areas for stage / performance control booth and temporary lighting / A/V towers. Included in this project is a pre-engineered / pre-manufactured bathroom facility.

Drawings and Specifications may be obtained from Demand Star by Onvia or City of Key West website www.cityofkeywest-fl.gov). For bid package access on Demand Star, please contact Onvia at www.demandstar.com or call 1-800-711-1712.

A **MANDATORY pre-bid meeting** will be held in the conference room at the City Engineering Trailer at the Truman Waterfront located at 20 East Quay Road, Key West, FL 33040 on Wednesday November 16, 2016 at 11:00 A.M.

The successful Bidder may be required to furnish the necessary additional bond(s) for the faithful performance of the Contract, as prescribed in the Bidding Documents. The Bidder will be required to furnish documentation showing that he is in compliance with the licensing requirements of the State and the provisions of Chapter 66 section 87 of the Code of Ordinances of the City of Key West. Compliance

with these provisions is required before the Contractor can enter into the agreement contained in the Contract Documents. Specifically, Bidder shall demonstrate that he holds, as a minimum, the following licenses and certificates required by State Statute and local codes.

EACH BID MUST BE SUBMITTED ON THE PRESCRIBED FORM AND ACCOMPANIED BY BID SECURITY AS PRESCRIBED IN THE INSTRUCTIONS TO BIDDERS, PAYABLE TO THE CITY OF KEY WEST, FLORIDA, IN AN AMOUNT NOT LESS THAN FIVE (5) PERCENT OF THE AMOUNT BID.

THE BIDDER MUST BE A LICENSED CONTRACTOR BY THE STATE OF FLORIDA AND SUBMIT PROOF OF SUCH WITH THE BID.

The Bidder shall furnish documentation showing that he is in compliance with the licensing requirements of the provisions of Chapter 66 Section 87 of the Code of Ordinances of the City of Key West; within 10 days following the Notice of Award and must demonstrate that he holds at a minimum, the following licenses & certificates;

A. City of Key West Business Tax License Receipt
B. A valid Certificate of Competency issued by the Chief Building Official of Key West, Florida.

All bid bonds, contract bonds, insurance contracts, and certificates of insurance shall be either executed by or countersigned by a licensed resident agent of the Surety or Insurance Company having his place of business in the State of Florida, and in all ways complying with the insurance laws of the State of Florida. Further, the said Surety or Insurance Company shall be duly licensed and qualified to do business in the State of Florida.

Before a Contract will be awarded for the work contemplated herein, the CITY will conduct such investigation as is necessary to determine the performance record and ability of the apparent low Bidder to perform the size and type of work specified under this Contract. Upon request, the Bidder shall submit such information as deemed necessary by the CITY to evaluate the Bidder's qualifications.

For information concerning the proposed work or for appointment to visit the site of the proposed work, contact Jim Bouquet, Engineering Services Department for the City of Key West at (305) 809-3962 or jbouquet@cityofkeywest-fl.gov.

As stated above at the time of the bid submittal the Bidder must provide satisfactory documentation of State Licenses. The Bidder shall furnish documentation showing that he is in compliance with the licensing requirements of County, and City licenses as would be required within ten days of the award. The successful Bidder must also be able to satisfy the City Attorney as to such insurance coverage and legal requirements as may be demanded by the Bid in question. The City may reject bids for any and/or all of the following reasons: (1) for budgetary reasons, (2) if the bidder misstates or conceals a material fact in its bid, (3) if the bid does not strictly conform to the law or is non-responsive to the bid requirements, (4) if the bid is conditional, (5) if a change of circumstances occurs making the purpose of the bid unnecessary to the City, or (6) if such rejection is in the best interest of the City. The City may also waive any minor formalities or irregularities in any bid.

* * * * * *

INSTRUCTIONS TO BIDDERS

1. CONTRACT DOCUMENTS

A. FORMAT

The Contract Documents are divided into parts, divisions, and sections for convenient organization and reference. Generally, there has been no attempt to divide the sections into work performed by the various building trades, work by separate subcontractors, or work required for separate facilities in the project.

B. DOCUMENT INTERPRETATION

The separate sections contained within these Contract Documents are intended to be mutually cooperative and to provide all details reasonably required for the execution of the proposed work.

Should there be any doubt as to the meaning or intent of said Contract Documents, the Bidder should request of Jim Bouquet (jbouquet@cityofkeywest-fl.gov) in writing (at least 10 working days prior to bid opening) an interpretation thereof. Any interpretation or change in said Contract Documents will be made only in writing in the form of Addenda to the documents which will be furnished to all registered holders of Contract Documents. Bidders shall submit with their Proposals, or indicate receipt of, all Addenda. The CITY will not be responsible for any other explanation or interpretations of said Documents.

2. GENERAL DESCRIPTION OF THE PROJECT

A general description of the work to be done is contained in the Invitation to Bid. The scope is specified in applicable parts of these Contract Documents.

3. QUALIFICATION OF CONTRACTORS

The prospective Bidders must meet the statutorily prescribed requirements before award of Contract by the CITY. Bidders must hold or obtain all licenses and/or certificates as required by the State and Local Statutes in order to bid and perform the work specified herein.

4. BIDDER'S UNDERSTANDING

Each Bidder must inform himself of the conditions relating to the execution of the work, and it is assumed that he will inspect the site and make himself thoroughly familiar with all the Contract Documents. Failure to do so will not relieve the successful Bidder of his obligation to enter into a Contract and complete the contemplated work in strict accordance with the Contract Documents. It shall be the Bidder's obligation to verify for himself and to his complete satisfaction all information concerning site and subsurface conditions.

INSTRUCTIONS TO BIDDERS (continued)

The CITY will make available to prospective Bidders upon request and at the office of the CITY Engineer, prior to bid opening, any information that he may have as to subsurface conditions and surface topography at the worksite.

Each Bidder shall inform himself of, and the Bidder awarded a Contract shall comply with, federal, state, and local laws, statutes, and ordinances relative to the execution of the work. This requirement includes, but is not limited to, applicable regulations concerning minimum wage rates, nondiscrimination in the employment of labor, protection of public and employee safety and health, environmental protection, the protection of natural resources, fire protection, burning and non-burning requirements, permits, fees, and similar subjects.

5. TYPE OF PROPOSAL

A. LUMP SUM

The Proposal for the work is to be submitted on a lump sum basis. All items required to complete the work specified but not included in the Proposal shall be considered incidental to those set forth in the Proposal.

The Bidder shall submit a Schedule of Values with the Proposal. Schedule of Values shall be broken down by bid items listed in the draft AIA 702 Continuation Sheet in PART 8 of the PROJECT MANUAL and will be used as a basis for payment. Contractor is responsible for providing a dollar amount for each item listed on the Schedule of Values and that total shall match the amount on the Proposal Lump Sum. The Bidder will be considered non-responsive if Schedule of Values is not complete and or not included in Bid Package.

6. PREPARATION OF BIDS

A. GENERAL

All blank spaces in the BID form must be filled in, as required, preferably in BLACK ink. All price information shall be shown in both words and figures where required. No changes shall be made in the phraseology of the forms. Written amounts shall govern in case of discrepancy between the amounts stated in writing and the amounts stated in figures. In case of discrepancy between individual lump sum prices and extended totals, unit prices shall prevail.

Any BID shall be deemed informal which contains omissions, erasures, alterations, or additions of any kind, or prices uncalled for, or in which any of the prices are obviously unbalanced, or which in any manner shall fail to conform to the conditions of the published Invitation to Bid.

INSTRUCTIONS TO BIDDERS (continued)

Only one BID from any individual, firm, partnership, or corporation, under the same or different names, will be considered. Should it appear to the CITY that any Bidder is interested in more than one Proposal for work contemplated; all Proposals in which such Bidder is interested will be rejected.

B. SIGNATURE

The Bidder shall sign his BID in the blank space provided therefore. If Bidder is a corporation, the legal name of the corporation shall be set forth above, together with the signature of the officer or officers authorized to sign Contracts on behalf of the corporation. If Bidder is a partnership, the true name of the firm shall be set forth above, together with the signature of the partner or partners authorized to sign Contracts in behalf of the partnership. If signature is by an agent, other than an officer of a corporation or a member of a partnership, a notarized power-of-attorney must be on file with the CITY prior to opening of Proposals or submitted with the Proposal, otherwise the Proposal will be regarded as not properly authorized.

C. SPECIAL BIDDING REQUIREMENTS

The Bidder's attention is brought to the hiring practices and licenses and permits of the City of Key West. These are defined in the addition to Article 39, ORDINANCES, PERMITS, AND LICENSES, as set forth in the Supplementary Conditions.

The Bidder shall submit with an experience record with the Bid showing his experience and expertise in general civil and park construction work including, but limited to, management and disposal of contaminated groundwater and soil and construction of site work, roadways, parking lots, playgrounds, safety surfacing, shade sails, furniture landscape and irrigation. Such experience record shall provide at least five current or recent projects of similar work, within the State Florida and preferably Monroe County. For each project the following information shall be provided:

1. Description and location of work.
2. Contract amount.
3. Dates work was performed.
4. Owner.
5. Name of Owner's contact person and phone number.
6. Engineer.
7. Name of Engineer's contact person and phone number.

The bidder shall submit with his bid a list of items to be performed by his own labor and that performed by subcontractors or others.

INSTRUCTIONS TO BIDDERS (continued)

D. ATTACHMENTS

Bidder shall complete and submit the following forms with his bid:

Anti-Kickback Affidavit
Public Entity Crimes Form
Indemnification Form
Local Vendor Certification
City of Key West Business License Tax Receipt
Domestic Partnership Affidavit
Cone of Silence Affidavit
Bidder's Checklist

E. PUBLIC ENTITY CRIMES FORM

Pursuant to the requirements of Chapter 287.133, Laws of Florida, pertaining to the sworn statement on Public Entity Crimes and the Convicted Vendor List, all Bidders shall submit a signed and notarized statement with their Bid on the form provided herein.

7. STATE AND LOCAL SALES AND USE TAXES

Unless the Supplementary Conditions contains a statement that the CITY is exempt from state sales tax on materials incorporated into the work due to the qualification of the work under this Contract, the Contractor, as required by the laws and statutes of the state and its political subdivisions, shall pay all state and local sales and use taxes. Prices quoted in the Proposal shall include all nonexempt sales and use taxes, unless provision is made in the Proposal form to separately itemize the tax.

8. SUBMISSION OF BIDS

All BIDS must be submitted not later than the time prescribed, at the place, and in the manner set forth in the Invitation to Bid. BIDS must be made on the BID forms provided herewith, **submit one (1) ORIGINAL bid package and two (2) FLASH DRIVEs containing a single PDF file of the entire bid package.**

Each BID must be submitted in a sealed envelope, so marked as to indicate the Bidder's name and its contents (project name and number) without being opened, and addressed in conformance with the instructions in the Invitation to Bid.

INSTRUCTIONS TO BIDDERS (continued)

9. MODIFICATION OR WITHDRAWAL OF BIDS

Prior to the time and date designated for receipt of BIDS, any BID submitted may be withdrawn by notice to the party receiving BIDS at the place designated for receipt of BIDS. Such notice shall be in writing over the signature of the Bidder or by telegram. If by telegram, written confirmation over the signature of the Bidder shall be mailed and postmarked on or before the date and time set for receipt of BID. No BID may be withdrawn after the time scheduled for opening of BIDS, unless the time specified in paragraph AWARD OF CONTRACT of these Instructions to Bidders shall have elapsed.

10. BID SECURITY

BIDS must be accompanied by cash, a certified check, or cashier's check drawn on a bank in good standing, or a bid bond issued by a Surety authorized to issue such bonds in the state where the work is located, in the amount of five (5) percent of the total amount of the Proposal submitted. This bid security shall be given as a guarantee that the Bidder will not withdraw his BID for a period of ninety (90) days after bid opening, and that if awarded the Contract, the successful Bidder will execute the attached Contract and furnish properly executed Performance and Payment Bonds, each in the full amount of the Contract price within the time specified. Agent and Surety phone numbers must be provided.

The Attorney-in-Fact who executes this bond in behalf of the Surety must attach a notarized copy of his power-of-attorney as evidence of his authority to bind the Surety on the date of execution of the bond. Where State Statute requires, certification by a resident agent shall also be provided.

If the Bidder elects to furnish a Bid Bond, he shall use the Bid Bond form bound herewith, or one conforming substantially thereto in form and content.

11. RETURN OF BID SECURITY

Within 15 days after the award of the Contract, the CITY will return the bid securities to all Bidders who’s BIDS are not to be further considered in awarding the Contract. Retained bid securities will be held until the Contract has been finally executed, after which all bid securities, other than Bidders' bonds and any guarantees, which have been forfeited, will be returned to the respective Bidders whose Proposals they accompanied.

INSTRUCTIONS TO BIDDERS (continued)

12. AWARD OF CONTRACT

Within sixty (60) calendar days after the opening of Proposals, the CITY will accept one of the Proposals or will act in accordance with the following paragraphs. The acceptance of the Proposal will be by written notice of award, mailed to the office designated in the Proposal, or delivered to the Bidder's representative. In the event of failure of the lowest responsive, responsible Bidder to sign the Contract and provide an acceptable Performance Bond, Payment Bond, insurance certificate(s) and evidence of holding required licenses and certificates, the Owner may award the Contract to the next lowest responsive, responsible Bidder. Such award, if made, will be made within ninety (90) days after the opening of Proposals.

The awarded Contractor shall agree to hold the bid lump sum fee for a minimum of one (1) year from the date of Notice of Award.

The CITY reserves the right to accept or reject any or all Proposals, and to waive any informalities and irregularities in said Proposals.

13. BASIS OF AWARD

The award will be made by the Owner on the basis of the Total BID + Owner Selected Bid Alternates) from the lowest, responsive, responsible BIDDER which, in the Owner's sole and absolute judgment will best serve the interest of the Owner. The Owner retains the option to award based BASE BID + Owner Selected Bid Alternates.

14. EXECUTION OF CONTRACT

The successful Bidder shall, within ten (10) working days after receiving Notice of Award, sign and deliver to the CITY an original Contract and two (2) copies in the form hereto attached, together with the insurance certificate examples of the bonds as required in the Contract Documents and evidence of holding required licenses and certificates. Within 10 working days after receiving the signed Contract from the successful Bidder, the City's authorized agent will sign the Contract. Signature by both parties constitutes execution of the Contract.

The contract shall be executed on the basis on available funding and respective lump sum fee.

INSTRUCTIONS TO BIDDERS (continued)

15. CONTRACT BONDS

A. PERFORMANCE AND PAYMENT BONDS

The successful Bidder shall file with the CITY, at the time of delivery of the signed Contract, a Performance Bond and Payment Bond on the form bound herewith, each in the full amount of the Contract price in accordance with the requirements of Florida Statutes Section 255.05 or 713.23, as applicable, as security for the faithful performance of the Contract and the payment of all persons supplying labor and materials for the construction of the work, and to cover all guarantees against defective workmanship or materials, or both, during the warranty period following the date of final acceptance of The work by the CITY. The Surety furnishing this bond shall have a sound financial standing and a record of service satisfactory to the CITY, shall be authorized to do business in the State of Florida, and shall be listed on the current U.S. Department of Treasury Circular Number 570, or amendments thereto in the Federal Register, of acceptable Sureties for federal projects. The CONTRACTOR shall supply the OWNER with phone numbers, addresses, and contacts for the Surety and their agents. Pursuant to Section 255.05(7), Florida Statutes, in lieu of the bond required by law, the contractor may file with the city an alternative form of security in the form of cash, a money order, a certified check, a cashier's check or an irrevocable letter of credit.

B. POWER-OF-ATTORNEY

The Attorney-in-Fact (Resident Agent) who executes this Performance and Payment Bond in behalf of the Surety must attach a notarized copy of his power-of-attorney as evidence of his authority to bind the Surety on the date of execution of the bond.
All Contracts, Performance and Payment Bonds, and respective powers-of-attorney will have the same date.

16. FAILURE TO EXECUTE CONTRACT AND FURNISH BOND

The Bidder who has a Contract awarded to him and who fails to promptly and properly execute the Contract or furnish the required Bonds shall forfeit the bid security that accompanied his bid, and the bid security shall be retained as liquidated damages by the CITY, and it is agreed that this said sum is a fair estimate of the amount of damages the CITY will sustain in case the Bidder fails to enter into a Contract or furnish the required Bonds. Bid security deposited in the form of cash, a certified check, or cashier's check shall be subject to the same requirement as a Bid Bond.

INSTRUCTIONS TO BIDDERS (continued)

17. PERFORMANCE OF WORK BY CONTRACTOR

Each Bidder must furnish with his Proposal a list of the items that he will perform with his own forces and the estimated total cost of these items.

18. TIME OF COMPLETION

The time of completion of the work to be performed under this Contract is the essence of the Contract. Delays and extensions of time may be allowed in accordance with the provisions stated in the General Conditions.

When the Contractor receives a Notice to Proceed, he shall commence work as soon as possible and shall complete all work within the number of calendar days stipulated in this Proposal.

The term of this contract will not exceed **220 calendar** days with ALL work complete and final invoice submitted to the CITY no later than September 8, 2017 to allow for submittal of Monroe County Tourist Development Council grant documentation.

PRIOR TO ANY AND ALL CONSTRUCTION ACTIVITIES, THE CONTRACTOR IS RESPONSIBLE FOR VERIFYING IF LOCATION OF CONSTRUCTION ACTIVITIES ARE SUBJECT TO ENVIRONMENTAL LAND USE CONTROLS (LUC). ANY AND ALL ENCOUNTERED CONTAMINATED SOIL AND OR GROUNDWATER SHALL BE HANDLED PER THE "SOIL AND GROUND WATER MANAGEMENT PLAN", DATED FEBRUARY 13, 2015 INCLUDED IN THE PROJECT MANUAL. CONTRACTOR SHALL VERIFY THAT LUC CONSTRUCTION PERMIT HAS BEEN FILED AND APPROVED FOR THIS WORK.

* * * * * *

PROPOSAL

NOTE TO BIDDER: Use preferably BLACK ink for completing this Proposal form.

To: The City of Key West

Address: 1300 White Street, Key West, Florida 33041

Project Title: TRUMAN WATERFRONT PARK AMPHITHEATER

Bidder's contact person for additional information on this Proposal:

Company Name: _____

Contact Name & Telephone #: _____

Email Address: _____

BIDDER'S DECLARATION AND UNDERSTANDING

The undersigned, hereinafter called the Bidder, declares that the only persons or parties interested in this Proposal are those named herein, that this Proposal is, in all respects, fair and without fraud, that it is made without collusion with any official of the Owner, and that the Proposal is made without any connection or collusion with any person submitting another Proposal on this Contract.

The Bidder further declares that he has carefully examined the Contract Documents for the construction of the project, that he has personally inspected the site, that he has satisfied himself as to the quantities involved, including materials and equipment, and conditions of work involved, including the fact that the description of the quantities of work and materials, as included herein, is brief and is intended only to indicate the general nature of the work and to identify the said quantities with the detailed requirements of the Contract Documents, and that this Proposal is made according to the provisions and under the terms of the Contract Documents, which Documents are hereby made a part of this Proposal.

CONTRACT EXECUTION AND BONDS

The Bidder agrees that if this Proposal is accepted, he will, within 10 days, not including Sundays and legal holidays, after Notice of Award, sign the Contract in the form annexed hereto, and will at that time, deliver to the Owner examples of the Performance Bond and Payment Bond required herein, and evidence of holding required licenses and certificates, and will, to the extent of his Proposal, furnish all machinery, tools, apparatus, and other means of construction and do the work and furnish all the materials necessary to complete all work as specified or indicated in the Contract Documents.

PROPOSAL (continued)

CERTIFICATES OF INSURANCE

Bidder agrees to furnish the Owner, before commencing the work under this Contract, the certificates of insurance as specified in these Documents.

All contractors and subcontractors wishing to perform work for the City of Key West, Florida, will be required to comply with the following minimum insurance requirements:

Commercial General Liability Limits:	$2,000,000 Aggregate $1,000,000 Each Occurrence $2,000,000 Products-Comp / Op Aggregate $1,000,000 Personal Injury $300,000 Fire Damage / Legal

Coverage must include the following:

- Contractual Liability
- CG2010 (1185) or Equivalent
- No exclusion for XCU
- Products / Completed Operations
- Personal Injury
- Commercial Form
- Broad Form Property Damage
- Premises / Operations
- Independent Contractors (if any part of the work is to be subcontracted out)

Automobile Liability:	$1,000,000 Combined Single Limit (Include Hired & Non-Owned Liability)
Additional Umbrella Liability:	$5,000,000 Occurrence / Aggregate
Worker's Compensation:	Statutory
Employer's Liability:	$1,000,000 Each Accident $1,000,000 Disease-Policy Limit $1,000,000 Disease-Each Employee
Pollution Liability:	$2,000,000

The Contractor will be required to provide Builders Risk insurance for the completed value of the project.

The above reflects the minimum requirements for working with the City of Key West. Any requirements found in a particular job's contract that are of a higher standard will prevail. The City of Key West must be named as an additional insured under all policies other than worker's compensation. Contractor's or subcontractor's general liability shall be written on a primary and non-contributory basis. Certificates of insurance must be accompanied by a copy of the additional insured endorsement (CG 20101185 or combination of CG20100704 and CG20370704 will be accepted). Contractors and subcontractors must obtain an endorsement from their carrier that waives and relinquishes any right of subrogation against the City of Key West and its agents, representatives, employees, and affiliates they might possess for any policy of insurance provided under this requirement or under any state or federal worker's compensation or employer's liability act. Contractor's policies must be endorsed to give no less than thirty (30) day notice to the City in the event of material change or cancellation. The City of Key West must be given a certificate of insurance showing that the above requirements have been met. The certificate of insurance must remain current and

PROPOSAL (continued)

Must include copies of the requested endorsements (additional insured, cancellation notice, and waiver of subrogation) in order for the City to issue payments to the contractor or subcontractor.

START OF CONSTRUCTION AND CONTRACT COMPLETION TIME

The Bidder further agrees to begin work within 14 calendar days after the date of the initial Notice to Proceed and to complete the project, in all respects within 220 calendar days.

LIQUIDATED DAMAGES

In the event the Bidder is awarded the Contract and shall fail to complete the work within the time limit or extended time limit agreed upon, as more particularly set forth in the Contract Documents, liquidated damages shall be paid to the Owner at the rate of $1,000.00 per day for all work awarded until the work has been satisfactorily completed as provided by the Contract Documents. Sundays and legal holidays shall be excluded in determining days in default.

ADDENDA

The Bidder hereby acknowledges that he has received Addenda No's. _____, _____,
____, _____, ____, ____, _____, _____, _____, _____, _____, _____,
(Bidder shall insert No. of each Addendum received) and agrees that all addenda issued are hereby made part of the Contract Documents, and the Bidder further agrees that his Proposal(s) includes all impacts resulting from said addenda.

SALES AND USE TAXES

The Bidder agrees that all federal, state, and local sales and use taxes are included in the stated bid prices for the work.

PROPOSAL (continued)

LUMP SUM ITEMS

The Bidder further proposes to accept as full payment for the work proposed herein the amounts computed under the provisions of the Contract Documents and based on the following lump sum amounts. The Bidder agrees that the lump sum represent a true measure of the labor and materials required to perform the work, including all allowances for overhead and profit for each type and unit of work called for in these Contract Documents.

1. BASE BID

1 LS $_____

Contingency and Unforeseen Conditions Allowance

1 LS (10% of Base Bid) $_____

TOTAL BASE BID **$_____**

TOTAL LUMP SUM BASE BID:

$_____

_____Dollars & _____Cents

(amount written in words)

BASE BID DEDUCT ALTERNATE

NOTE: OWNER HAS THE RIGHT TO ACCEPT OR REJECT ANY, ALL, OR NO BID ALTERNATE ITEMS. THE TOTAL OF BASE BID PLUS THE SUM OF OWNER SELECTED BID ALTERNATES WILL A BASIS OF EVALUATING LOW BIDDER AND BASIS OF AWARD.

1. Substitute the painted metal panels at the curved back wall with painted smooth stucco finish over same metal framing as shown in add alternate in drawings.

   1 LS $_____

PROPOSAL (continued)

The Bidder shall submit a Schedule of Values with the Proposal. Schedule of Values shall be broken down by bid items listed in the draft AIA 702 Continuation Sheet in PART 8 of the PROJECT MANUAL and will be used as a basis for payment.
Contractor is responsible for providing a dollar amount for each item listed on the Schedule of Values and that total shall match the amount on the Proposal Lump Sum. The Bidder will be considered non-responsive if Schedule of Values is not complete and or not included in Bid Package.

Payment for materials and equipment authorized by the Owner in a written Change Order but not listed in the above Proposal will be provided at the suppliers invoice plus 10 %.

List items to be performed by CONTRACTOR's own forces and the estimated percent of the Total Lump Sum Base Bid.

PROPOSAL (continued)

SUBCONTRACTORS

The Bidder further proposes that the following subcontracting firms or businesses will be awarded subcontracts for the following portions of the work in the event that the Bidder is awarded the Contract:

_____
Name

_____ _____
Trade Percent of Total Base Bid

_____, _____, _____, _____
Street City State Zip

_____
Name

_____ _____
Trade Percent of Total Base Bid

_____, _____, _____, _____
Street City State Zip

_____
Name

_____ _____
Trade Percent of Total Base Bid

_____, _____, _____, _____
Street City State Zip

_____
Name

_____ _____
Trade Percent of Total Base Bid

_____, _____, _____, _____
Street City State Zip

_____
Name

_____ _____
Trade Percent of Total Base Bid

_____, _____, _____, _____
Street City State Zip

PROPOSAL (continued)

SURETY

_____ whose address is

_____, _____, _____, _____
Street City State Zip

BIDDER

The name of the Bidder submitting this Proposal is

_____ doing business at

_____, _____, _____, _____
Street City State Zip

which is the address to which all communications concerned with this Proposal and with the Contract shall be sent.

The names of the principal officers of the corporation submitting this Proposal, or of the partnership, or of all persons interested in this Proposal as principals are as follows:

_____ _____

_____ _____

_____ _____

_____ _____

_____ _____

PROPOSAL (continued)

If Sole Proprietor or Partnership

IN WITNESS hereto the undersigned has set his (its) hand this _____ day of _____ 2016.

_____
Signature of Bidder

_____
Title

If Corporation

IN WITNESS WHEREOF the undersigned corporation has caused this instrument to be executed and its seal affixed by its duly authorized officers this _____ day of _____ 2016.

(SEAL)

_____
Name of Corporation

By _____

Title _____

Attest_____

EXPERIENCE OF BIDDER

The Bidder states that he is an experienced CONTRACTOR and has completed similar projects within the last 5 years. List similar projects, with types, names of OWNERs, construction costs, ENGINEERs, and references with phone numbers on attached sheet.

****

FLORIDA BID BOND

BOND NO. _____

AMOUNT: $_____

KNOW ALL MEN BY THESE PRESENTS, that _____

_____

hereinafter called the PRINCIPAL, and _____

_____

a corporation duly organized under the laws of the State of _____

having its principal place of business at _____

_____in the State of _____,

and authorized to do business in the State of Florida, as SURETY, are held and firmly bound unto

_____

hereinafter CITY OF KEY WEST called the OBLIGEE, in the sum of_____

_____ _____ DOLLARS ($_____)

for the payment for which we bind ourselves, our heirs, executors, administrators, successors, and assigns, jointly and severally, firmly by these present.

THE CONDITION OF THIS BOND IS SUCH THAT:

WHEREAS, the PRINCIPAL is herewith submitting his or its Bid Proposal for TRUMAN WATERFRONT PARK AMPHITHEATER, said Bid Proposal, by reference thereto, being hereby made a part hereof.

FLORIDA BID BOND (continued)

WHEREAS, the PRINCIPAL contemplates submitting or has submitted a bid to the OBLIGEE for the furnishing of all labor, materials (except those to be specifically furnished by the CITY), equipment, machinery, tools, apparatus, means of transportation for, and the performance of the work covered in the Proposal and the detailed Specifications, entitled:

TRUMAN WATERFRONT PARK AMPHITHEATER

WHEREAS, it was a condition precedent to the submission of said bid that a cashier's check, certified check, or bid bond in the amount of 5 percent of the base bid be submitted with said bid as a guarantee that the Bidder would, if awarded the Contract, enter into a written Contract with the CITY for the performance of said Contract, within 10 working days after written notice having been given of the award of the Contract.

NOW, THEREFORE, the conditions of this obligation are such that if the PRINCIPAL within 10 consecutive calendar days after written notice of such acceptance, enters into a written Contract with the OBLIGEE and furnishes the Performance and Payment Bonds, each in an amount equal to 100 percent of the base bid, satisfactory to the CITY, then this obligation shall be void; otherwise the sum herein stated shall be due and payable to the OBLIGEE and the Surety herein agrees to pay said sum immediately upon demand of the OBLIGEE in good and lawful money of the United States of America, as liquidated damages for failure thereof of said PRINCIPAL.

Signed and sealed this _____ day of _____, 2016.

PRINCIPAL

By_____

_____
SURETY

By _____
Attorney-In-Fact

STATE OF _____)
: SS
COUNTY OF _____)

FLORIDA BID BOND (continued)

I, the undersigned hereby duly sworn, depose and say that no portion of the sum herein bid will be paid to any employees of the City of Key West as a commission, kickback, reward or gift, directly or indirectly by me or any member of my firm or by an officer of the corporation.

By: _____

Sworn and subscribed before me this _____day of _____, 2016.

NOTARY PUBLIC, State of _____at Large

My Commission Expires:

* * * * * *

ANTI – KICKBACK AFFIDAVIT

STATE OF _____)
: SS
COUNTY OF _____)

I, the undersigned hereby duly sworn, depose and say that no portion of the sum herein bid will be paid to any employees of the City of Key West as a commission, kickback, reward or gift, directly or indirectly by me or any member of my firm or by an officer of the corporation.

By: _____

Sworn and subscribed before me this _____day of _____, 2016.

NOTARY PUBLIC, State of _____ at Large

My Commission Expires:

* * * * * *

SWORN STATEMENT UNDER SECTION 287.133(3)(A)
FLORIDA STATUTES, ON PUBLIC ENTITY CRIMES

THIS FORM MUST BE SIGNED IN THE PRESENCE OF A NOTARY PUBLIC OR OTHER OFFICER AUTHORIZED TO ADMINISTER OATHS.

1. This sworn statement is submitted with Bid or Proposal for _____

   _____

2. This sworn statement is submitted by_____
   (name of entity submitting sworn statement)

   whose business address is _____

   _____

   and (if applicable) its Federal Employer Identification Number (FEIN) is_____

   _____

   (If the entity has no FEIN, include the Social Security Number of the individual

   signing this sworn statement _____

3. My name is _____
   (please print name of individual signing)

   and my relationship to the entity named above is _____

4. I understand that a "public entity crime" as defined in Paragraph 287.133(1)(g), Florida Statutes, means a violation of any state or federal law by a person with respect to and directly related to the transaction of business with any public entity or with an agency or political subdivision of any other state or with the United States, including but not limited to, any bid or contract for goods or services to be provided to any public or an agency or political subdivision of any other state or of the United States and involving antitrust, fraud, theft, bribery, collusion, racketeering, conspiracy, material misrepresentation.

5. I understand that "convicted" or "conviction" as defined in Paragraph 287.133(1)(b), Florida Statutes, means a finding of guilt or a conviction of a public entity crime, with or without an adjudication guilt, in any federal or state trial court of record relating to charges brought by indictment information after July 1, 1989, as a result of a jury verdict, nonjury trial, or entry of a plea of guilty or nolo contendere.

PUBLIC ENTITY CRIMES (continued)

6. I understand that an "affiliate" as defined in Paragraph 287.133(1)(a), Florida Statutes, means

    a. A predecessor or successor of a person convicted of a public entity crime; or

    b. An entity under the control of any natural person who is active in the management of the entity and who has been convicted of a public entity crime. The term "affiliate" includes those officers, directors, executives, partners, shareholders, employees, members, and agents who are active in the management of an affiliate. The ownership by one person of shares constituting controlling interest in another person, or a pooling of equipment or income among persons when not for fair market value under an arm's length agreement, shall be a prima facie case that one person controls another person. A person who knowingly enters into a joint venture with a person who has been convicted of a public entity crime in Florida during the preceding 36 months shall be considered an affiliate.

7. I understand that a "person" as defined in Paragraph 287.133(1)(8), Florida Statutes, means any natural person or entity organized under the laws of any state or of the United States with the legal power to enter into a binding contract and which bids or applies to bid on contracts for the provision of goods or services let by a public entity, or which otherwise transacts or applies to transact business with public entity. The term "person" includes those officers, directors, executives, partners, shareholders, employees, members, and agents who are active in management of an entity.

8. Based on information and belief, the statement which I have marked below is true in relation to the entity submitting this sworn statement. (Please indicate which statement applies).

    ____Neither the entity submitting this sworn statement, nor any officers, directors, executives, partners, shareholders, employees, members, or agents who are active in management of the entity, nor any affiliate of the entity have been charged with and convicted of a public entity crime subsequent to July 1, 1989, AND (Please indicate which additional statement applies.)

    _____There has been a proceeding concerning the conviction before a hearing of the State of Florida, Division of Administrative Hearings. The final order entered by the hearing officer did not place the person or affiliate on the convicted vendor list. (Please attach a copy of the final order.)

    _____The person or affiliate was placed on the convicted vendor list. There has been a subsequent proceeding before a hearing officer of the State of

    Florida, Division of Administrative Hearings. The final order entered by the hearing officer determined that it was in the public interest to remove the person or affiliate from the convicted vendor list. (Please attach a copy of the final order.)

PUBLIC ENTITY CRIMES (continued)

_____The person or affiliate has not been put on the convicted vendor list. (Please describe any action taken by or pending with the Department of General Services.)

_____
(signature)

_____
(date)

STATE OF_____

COUNTY OF_____

PERSONALLY APPEARED BEFORE ME, the undersigned authority,

_____who, after first being sworn by me, affixed his/her
(name of individual signing)

signature in the space provided above on this_____day of _____ , 2016.

My commission expires:

_____
NOTARY PUBLIC

* * * * * *

INDEMNIFICATION

To the fullest extent permitted by law, the CONTRACTOR expressly agrees to indemnify and hold harmless the City of Key West, their officers, directors, agents, and employees (herein called the "indemnitees") from liabilities, damages, losses and costs, including, but not limited to, reasonable attorney's fees and court costs, such legal expenses to include costs incurred in establishing the indemnification and other rights agreed to in this Paragraph, to persons or property, to the extent caused by the negligence, recklessness, or intentional wrongful misconduct of the CONTRACTOR, its Subcontractors or persons employed or utilized by them in the performance of the Contract. Claims by indemnitees for indemnification shall be limited to the amount of CONTRACTOR's insurance or $1 million per occurrence, whichever is greater. The parties acknowledge that the amount of the indemnity required hereunder bears a reasonable commercial relationship to the Contract and it is part of the project specifications or the bid documents, if any.

The indemnification obligations under the Contract shall not be restricted in any way by any limitation on the amount or type of damages, compensation, or benefits payable by or for the CONTRACTOR under workers' compensation acts, disability benefits acts, or other employee benefits acts, and shall extend to and include any actions brought by or in the name of any employee of the CONTRACTOR or of any third party to whom CONTRACTOR may subcontract a part or all of the Work. This indemnification shall continue beyond the date of completion of the work.

CONTRACTOR: _____ SEAL:

_____
Address

_____
Signature

_____
Print Name

_____
Title

_____
Date

* * * * * *

LOCAL VENDOR CERTIFICATION PURSUANT TO CKW ORDINANCE 09-22 SECTION 2-798

The undersigned, as a duly authorized representative of the vendor listed herein, certifies to the best of his/her knowledge and belief, that the vendor meets the definition of a "Local Business." For purposes of this section, "local business" shall mean a business which:

a. Principle address as registered with the FL Department of State located within 30 miles of the boundaries of the city, listed with the chief licensing official as having a business tax receipt with its principle address within 30 miles of the boundaries of the city for at least one year immediately prior to the issuance of the solicitation.

b. Maintains a workforce of at least 50 percent of its employees from the city or within 30 miles of its boundaries.

c. Having paid all current license taxes and any other fees due the city at least 24 hours prior to the publication of the call for bids or request for proposals.

- Not a local vendor pursuant to Ordinance 09-22 Section 2-798
- Qualifies as a local vendor pursuant to Ordinance 09-22 Section 2-798

If you qualify, please complete the following in support of the self-certification & submit copies of your County and City business licenses. Failure to provide the information requested will result in denial of certification as a local business.

Business Name _____ Phone:

Current Local Address: _____ Fax:_____
(P.O Box numbers may not be used to establish status)

Length of time at this address:_____

_____Date: _____
Signature of Authorized Representative

STATE OF_____ COUNTY OF_____

The foregoing instrument was acknowledged before me this _____day of_____, 2016.

By_____ , of _____
(Name of officer or agent, title of officer or agent) (Name of corporation acknowledging)

or has produced identification_____as identification
(Type of identification)

_____
Signature of Notary

_____
Print, Type or Stamp Name of Notary

Return Completed form with Supporting documents to: City of Key West Purchasing

_____
Title or Rank

* * * * * *

EQUAL BENEFITS FOR DOMESTIC PARTNERS AFFIDAVIT

STATE OF _____)
: SS
COUNTY OF _____)

I, the undersigned hereby duly sworn, depose and say that the firm of _____ provides benefits to domestic partners of its employees on the same basis as it provides benefits to employees' spouses per City of Key West Ordinance Sec. 2-799.

By: _____

Sworn and subscribed before me this

_____ day of _____, 2016.

_____
NOTARY PUBLIC, State of _____ at Large

My Commission Expires: _____

* * * * * *

CONE OF SILENCE AFFIDAVIT

STATE OF _____)
: SS
COUNTY OF _____)

I the undersigned hereby duly sworn depose and say that all owner(s), partners, officers, directors, employees and agents representing the firm of _____ have read and understand the limitations and procedures regarding communications concerning City of Key West issued competitive solicitations pursuant to City of Key West Ordinance Section 2-773 Cone of Silence (attached).

_____
(signature)

_____
(date)

Sworn and subscribed before me this

_____ Day of _____, 2016.

_____
NOTARY PUBLIC, State of _____ at Large

My Commission Expires: _____

* * * * * *

BIDDER'S CHECKLIST

(Note: The purpose of this checklist is to serve as a reminder of major items to be addressed in submitting a bid and is not intended to be all inclusive. It does not alleviate the Bidder from the responsibility of becoming familiar with all aspects of the Contract Documents and proper completion and submission of his bid.)

1.	All Contract Documents thoroughly read and understood.	[ ]
2.	All blank spaces in Proposal filled in, using black ink.	[ ]
3.	Total and unit prices added correctly and attached Schedule of Values	[ ]
4.	Addenda acknowledged.	[ ]
5.	Subcontractors are named as indicated in the Proposal.	[ ]
6.	Experience record included.	[ ]
7.	Proposal signed by authorized officer.	[ ]
8.	Bid Bond completed and executed, including power-of-attorney dated the same date as Bid Bond.	[ ]
9.	Bidder familiar with federal, state, and local laws, ordinances, rules and regulations affecting performance of the work.	[ ]
10.	Bidder, if successful, able to obtain and/or demonstrate possession of required licenses and certificates within (10) ten calendar days after receiving a Notice of Award.	[ ]
11.	BID submitted intact with the volume entitled “Bidding Requirements” and “Contract Forms”, 1 original and 1 flash drive as stated in the invitation to bid.	[ ]
12.	Bid Documents submitted in sealed envelope and addressed and labeled in conformance with the instructions in the Invitation to Bid.	[ ]

* * * * * *

PART 2

CONTRACT FORMS

CONTRACT

This Contract, made and entered into this _____ day of _____
20___,

by and between the City of Key West, hereinafter called the "Owner", and_____

_____

hereinafter called the "Contractor";

WITNESSETH:

The Contractor, in consideration of the sum to be paid him by the Owner and of the covenants and agreements herein contained, hereby agrees at his own proper cost and expense to do all the work and furnish all the materials, tools, labor, and all appliances, machinery, and appurtenances for ITB No. 17-009 TRUMAN WATERFRONT PARK AMPHITHEATER, Key West, Florida to the extent of the Proposal made by the Contractor, dated the _____ day of 2016, all in full compliance with the Contract Documents referred to herein.

The CONTRACT DOCUMENTS, including the signed copy of the PROPOSAL, CONTRACT FORMS, PERFORMANCE & PAYMENT BONDS AND SCOPE OF WORK.

In consideration of the performance of the work as set forth in these Contract Documents, the Owner agrees to pay to the Contractor the amount bid in the Proposal as adjusted in accordance with the Contract Documents, or as otherwise herein provided, and to make such payments in the manner and at the times provided in the Contract Documents.

The Contractor agrees to complete the work within 220 calendar days with ALL work complete and final invoice submitted to the CITY no later than September 8, 2017.

The Contractor agrees to accept as full payment hereunder the amounts computed as determined by the Contract Documents and based on the said BID.

The Contractor agrees to remedy all defects appearing in the work or developing in the materials furnished and the workmanship performed under this Contract during the warranty period after the date of final acceptance of the work by the Owner, and further agrees to indemnify and save the Owner harmless from any costs encountered in remedying such defects.

It is agreed that the Contract, based upon the BID, shall be fully complete within the stated number of consecutive calendar days from the date the Notice to Proceed is issued.

In the event the Contractor fails to complete the work within the time limit or extended time limit agreed upon, as more particularly set forth in the Contract Documents, liquidated damages for BASE BID shall be paid at a rate of $1,000.00 per day. Sundays and legal holidays shall be included in determining days in default.

This contract will automatically expire upon completion of the project. Contractors warranty obligations remain in effect.

IN WITNESS WHEREOF, we, the parties hereto, each herewith subscribe the same this

_____ day of _____, A.D., 20___.

CITY OF KEY WEST

By_____

Title_____

CONTRACTOR

By_____

Title_____

* * * *

FLORIDA PERFORMANCE BOND

BOND NO._____

AMOUNT: $_____

KNOW ALL MEN BY THESE PRESENTS, that in accordance with Florida Statutes Section

255.05 _____

with offices at _____
hereinafter called the CONTRACTOR (Principal), and

_____

with offices at_____
a corporation duly organized and existing under and by virtue of the laws of the State of Florida, hereinafter called the SURETY, and authorized to transact business within the State of Florida, as SURETY, are held and firmly bound unto the **CITY OF KEY WEST,** hereinafter called the CITY (Obligee), in the sum of:

_____DOLLARS ($_____),
lawful money of the United States of America, for the payment of which, well and truly be made to the CITY, the CONTRACTOR and the SURETY bind themselves and each of their heirs, executors, administrators, successors, and assigns, jointly and severally, firmly by these presents as follows:

THE CONDITION OF THE ABOVE OBLIGATION IS SUCH THAT:
WHEREAS, the CONTRACTOR has executed and entered into a certain Contract hereto attached, with the CITY, dated _____, 20___, to furnish at his own cost, charges, and expense all the necessary materials, equipment, and/or labor in strict and express accordance with said Contract and the Contract Documents as defined therein, all of which is made a part of said Contract by certain terms and conditions in said Contract more particularly mentioned, which Contract, consisting of the various Contract Documents is made a part of this Bond as fully and completely as if said Contract Documents were set forth herein;

NOW THEREFORE, the conditions of this obligation are such that if the above bounden CONTRACTOR:

1. Shall in all respects comply with the terms and conditions of said Contract and his obligation there under, including the Contract Documents (which include the scope of work and conditions as prepared by the CITY, invitation to bid, instructions to bidders, the CONTRACTOR'S bid as accepted by the above CITY, the bid and contract performance and payment bonds, and all addenda, if any, issued prior to the opening of bids), being made a part of this bond by reference, at the times and in the manner prescribed in the contract; and

2. Promptly makes payments to all claimants, as defined in Section 255.05(1), Florida Statutes, supplying PRINCIPAL with labor, materials, or supplies, used directly or indirectly by PRINCIPAL in the prosecution of the work provided for in the contract; and

3. Pays CITY all losses, costs, expenses, damages, attorney's fees, including appellate proceedings, injury or loss of whatever kind and however arising including, without limitation, delay damages to which said CITY may be subject by reason of any wrongdoing, misconduct, want of care or skill, negligence, failure of performance, breach, failure to petition within the prescribed time, or default, including patent infringements, on the part of said CONTRACTOR, his agents or employees, in the execution or performance of said Contract; and

4. Performs the guarantee of all work and materials furnished under the contract for the time specified in the contract, then this obligation shall be void; otherwise, to remain in full force and effect for the term of said Contract.

AND, the said Surety for value received, hereby stipulates and agrees that no change involving any extension of time, or addition to the terms of the Contract Documents, or to the work to be performed, or materials to be furnished there under shall affect said obligation of said Surety on this Bond, and the said Surety does hereby waive notice of any such changes, extension of time, alterations, or additions of the terms of the Contract Documents, or to the work.

Any action instituted by a claimant under this bond for payment must be in accordance with the notice and time limitation provisions in Section 255.05(2), Florida Statutes.

IN WITNESS WHEREOF, the above parties bonded together have executed this instrument

this _____ day of _____, 20___, the name and corporate seal of each corporate party being hereto affixed and those presents duly signed by its undersigned representative, pursuant to authority of its governing body.

CONTRACTOR

By: _____

(SEAL)

ATTEST

SURETY

By: _____

(SEAL)

ATTEST

FLORIDA PAYMENT BOND

BOND NO._____

AMOUNT: $_____

KNOW ALL MEN BY THESE PRESENTS, that in accordance with Florida Statutes Section

255.05,_____

with offices at_____
hereinafter called the CONTRACTOR, (Principal), and

_____

with offices at _____

a corporation duly organized and existing under and by virtue of the laws of the State of _____

_____ , hereinafter called the SURETY, and authorized to transact business within the State of Florida, as SURETY, are held and firmly bound unto CITY OF KEY WEST**,** hereinafter called the City (Obligee), in the sum of:

_____DOLLARS(_____),
lawful money of the United States of America, for the payment of which, well and truly be made to the CITY, and the CONTRACTOR and the SURETY bind themselves and each of their heirs, executors, administrators, successors, and assigns, jointly and severally, firmly by these presents as follows:

THE CONDITION OF THE ABOVE OBLIGATION IS SUCH THAT:

WHEREAS, the CONTRACTOR has executed and entered into a certain Contract for

ITB No. 17-009 TRUMAN WATERFRONT PARK AMPHITHEATER attached hereto, with the CITY, dated

_____, 20___, to furnish at his own cost, charges, and expense the necessary materials, equipment, and/or labor in strict and express accordance with said Contract and the plans, drawings (if any), and specifications prepared by the CITY, all of which is made a part of said Contract by certain terms and conditions in said Contract more particularly mentioned, which Contract, consisting of the various Contract Documents specifically mentioned herein and relative hereto, is made a part of this Bond as fully and completely as if said Contract Documents were set forth herein.

NOW THEREFORE, the conditions of this obligation are such that if the above bounden CONTRACTOR shall in all respects comply with the terms and conditions of said Contract and his obligation thereunder, including the Contract Documents ,which include Scope of work and conditions prepared by the CITY, invitation to bid, instructions to bidders, the

CONTRACTOR'S bid as accepted by the CITY, the bid and contract and payment bonds, and all addenda, if any, issued prior to the opening of bids), and further that if said CONTRACTOR shall promptly make payments to all persons supplying materials, equipment, and/or labor, used directly or indirectly by said CONTRACTOR or subcontractors in the prosecution of the work for said contract is accordance with Florida Statutes, Section 255.05 or Section 713.23, then this obligation shall be void; otherwise to remain in full force and effect for the term of said contract, including and all guarantee periods as specifically mentioned in said Contract Documents.

AND, the said SURETY for value received, hereby stipulates and agrees that no change involving any extension of time, or addition to the terms of the Contract or to the work to be performed, or materials to be furnished thereunder, or in the Contract Documents and specifications accompanying the said contract shall affect said obligation of said SURETY on this Bond, and the said SURETY does hereby waive notice of any such changes, extension of time, alternations, or additions of the terms of the Contract, or to the work, to the Contract Documents, or to the specifications.

Claimant shall give written notice to the CONTRACTOR and the SURETY as required by Section 255.05 or Section 713.23, Florida Statutes. Any action instituted against the CONTRACTOR or SURETY under this bond for payment must be in accordance with the notice and time limitation provisions in Section 255.05(2) or Section 713.23, Florida Statutes.

IN WITNESS WHEREOF, the above parties bounded together have executed this instrument

this _____ day of _____, 20___, the name and corporate seal of each corporate party being hereto affixed and those presents duly signed by its undersigned representative, pursuant to authority of its governing body.

CONTRACTOR

By:_____

(SEAL)

ATTEST

SURETY

By:_____

(SEAL)

ATTEST

PART 3

CONDITIONS OF THE CONTRACT

GENERAL CONDITIONS CONTENTS

ARTICLE

DEFINITIONS

1. AS APPROVED
2. AS SHOWN, AND AS INDICATED
3. BIDDER
4. CONTRACT DOCUMENTS
5. CONTRACTOR
6. CONTRACT COMPLETION
7. DAYS
8. DRAWINGS
9. ENGINEER
10. NOTICE
11. OR EQUAL
12. OWNER
13. PLANS
14. SPECIFICATIONS
15. NOTICE TO PROCEED
16. SUBSTANTIAL COMPLETION
17. WORK

CONTRACT DOCUMENTS

18. INTENT OF CONTRACT DOCUMENTS
19. DISCREPANCIES AND OMISSIONS
20. CHANGES IN THE WORK
21. EXAMINATION AND VERIFICATION OF CONTRACT DOCUMENTS
22. DOCUMENTS TO BE KEPT ON THE JOBSITE
23. ADDITIONAL CONTRACT DOCUMENTS
24. OWNERSHIP OF CONTRACT DOCUMENTS

THE ENGINEER

25. AUTHORITY OF THE ENGINEER
26. DUTIES AND RESPONSIBILITIES OF THE ENGINEER
27. LIMITATIONS ON ENGINEER'S RESPONSIBILITIES
28. REJECTED WORK
29. LINES AND GRADES
30. SUBMITTALS
31. DETAIL DRAWINGS AND INSTRUCTIONS

THE CONTRACTOR AND HIS EMPLOYEES

32. CONTRACTOR, AN INDEPENDENT AGENT
32. (a) ASSIGNMENT OF CONTRACT
33. SUBCONTRACTING
34. INSURANCE AND LIABILITY
    A. GENERAL
    B. CONTRACTOR AND SUB-CONTRACTOR INSURANCE
    C. COMPENSATION AND EMPLOYER'S LIABILITY INSURANCE
    D. GENERAL LIABILITY INSURANCE (INCLUDING AUTOMOBILE)
    E. BUILDER'S RISK ALL RISK INSURANCE
    F. NO PERSONAL LIABILITY OF PUBLIC OFFICIALS
35. INDEMNITY
36. EXCLUSION OF CONTRACTOR CLAIMS
37. TAXES AND CHARGES
38. REQUIREMENTS OF STATE LAW FOR PUBLIC WORKS PROJECTS
39. CODES, ORDINANCES, PERMITS, AND LICENSES
40. SUPERINTENDENCE
41. RECEPTION OF ENGINEER'S COMMUNICATIONS
42. SAFETY
43. PROTECTION OF WORK AND PROPERTY
44. RESPONSIBILITY OF CONTRACTOR TO ACT IN AN EMERGENCY
45. MATERIALS AND APPLIANCES
46. CONTRACTORS' AND MANUFACTURERS' COMPLIANCE WITH STATE SAFETY, OSHA AND OTHER CODE REQUIREMENTS
47. SUBSTITUTION OF MATERIALS
48. TESTS, SAMPLES, AND OBSERVATIONS
49. ROYALTIES AND PATENT
50. CONTRACTOR'S RIGHT TO TERMINATE CONTRACT
51. CORRECTION OF DEFECTIVE WORK DURING WARRANTY PERIOD

PROGRESS OF THE WORK

52. BEGINNING OF THE WORK
53. SCHEDULES AND PROGRESS REPORTS
54. PROSECUTION OF THE WORK
55. OWNER'S RIGHT TO RETAIN IMPERFECT WORK
56. OWNER'S RIGHT TO DO WORK
57. OWNER'S RIGHT TO TRANSFER EMPLOYMENT
58. DELAYS AND EXTENSION OF TIME
59. DIFFERING SITE CONDITION

GENERAL CONDITIONS CONTENTS (continued)

Article

60. LIQUIDATED DAMAGES
61. OTHER CONTRACTS
62. USE OF PREMISES
63. SUBSTANTIAL COMPLETION DATE
64. PERFORMANCE TESTING
65. OWNER'S USE OF PORTION OF THE WORK
66. CUTTING AND PATCHING
67. CLEANING UP

PAYMENT

68. CHANGE ORDERS
A. UNIT PRICE
B.LUMP SUM
C. COST REIMBURSEMENT WORK
69. PARTIAL PAYMENTS
A. GENERAL
B. ESTIMATE
C. DEDUCTION FROM ESTIMATE
D. QUALIFICATIONS FOR PARTIAL PAYMENT FOR MATERIALS DELIVERED
E. PAYMENT
70. CLAIMS FOR EXTRA WORK
71. RELEASE OF LIENS OR CLAIMS
72. FINAL PAYMENT
73. NO WAIVER OF RIGHTS
74. ACCEPTANCE OF FINAL PAYMENT CONSTITUTES RELEASE

****

DEFINITIONS

Whenever in the Contract Documents the following terms are used, the intent and meaning shall be interpreted as follows:

1. AS APPROVED

The words "as approved", unless otherwise qualified, shall be understood to be followed by the words "by the ENGINEER for conformance with the Contract Document".

2. AS SHOWN, AND AS INDICATED

The words "as shown" and "as Indicated" shall be understood to be followed by the words "on the Drawings".

3. BIDDER

The person or persons, partnership, firm, or corporation submitting a Proposal for the work contemplated.

4. CONTRACT DOCUMENTS

The "Contract Documents" consist of the Bidding Requirements, Contract Forms, Conditions of the Contact, Specifications, Drawings, all modifications thereof incorporated into the Documents before their execution, Change Orders, and all other requirements incorporated by specific reference thereto. These form the Contract.

5. CONTRACTOR

The person or persons, partnership, firm, or corporation who enters into the Contract awarded him by the OWNER.

6. CONTRACT COMPLETION

The "Contract Completion" is the date the OWNER accepts the entire work as being in compliance with the Contract Documents, or formally waives nonconforming work to extent of nonconformity, and issues the final payment in accordance with the requirements set forth in Article, "Final Payment" of these General Conditions.

7. DAYS

Unless otherwise specifically stated, the term "days" will be understood to mean calendar days. Business day or working day means any day other than Saturday, Sunday, or legal holiday.

8. DRAWINGS

The term "Drawings" refers to the official Drawings, Profiles, cross sections, elevations, details, and other working drawings and supplementary drawings, or reproductions thereof, signed by the ENGINEER, which shows the location, character, dimensions, and details of the work to be performed. Drawings may either be bound in the same book as the balance of the Contract Documents, or bound in separate sets, and are a part of the Contract Documents, regardless of the method of binding.

9. ENGINEER

The person or organization identified as such in the Contract Documents. The Term "ENGINEER" means ENGINEER or his authorized representative.

10. NOTICE

The term "notice" or the requirement to notify, as used in the Contract Documents or applicable state or federal statutes, shall signify a written communication delivered in person or by registered mail to the individual, or to a member of the firm, or to an officer of the corporation for whom it is intended. Certified or registered mail shall be addressed to the last business address known to him who gives the notice.

11. OR EQUAL

The term "or equal" shall be understood to indicate that the "equal" Product is equivalent to or better than the Product named in function, performance, reliability, quality, and general configuration. Determination of equality in reference to the Project design requirements will be made by the ENGINEER. Such equal Products shall not be purchased or installed by the CONTRACTOR without written authorization.

12. OWNER

The person, organization, or public body identified as such in the Contract Documents.

13. PLANS (See Drawings)

14. SPECIFICATIONS

The term "Specifications" refers to those portions of the Contract Documents consisting of written technical descriptions of materials, equipment, construction systems, standards, and workmanship as applied to the work and certain administrative details applicable thereto. Where standard specifications, such as those of ASTM, AASHTO, etc., have been referred to, the applicable portions of such standard specifications shall become a part of these Contract Documents. If referenced specifications conflict with specifications contained herein, the requirements contained herein shall prevail.

15. NOTICE TO PROCEED

A written notice given by the OWNER to the CONTRACTOR (with a copy to the ENGINEER) fixing the date on which the Contract time will commence to run and on which the CONTRACTOR shall start to perform his obligation under the Contract Documents. The Notice to Proceed will be given within 30 days following the execution of the Contract by the OWNER.

16. SUBSTANTIAL COMPLETION

"Substantial Completion" shall be that degree of completion of the Project or a defined portion of the Project, as evidenced by the ENGINEER's written notice of Substantial Completion, sufficient to Provide the OWNER, at his discretion, the full-time use of the Project or defined portion of the Project for the purposes for which it was intended. "Substantial Completion" of an operating facility shall be that degree of completion that has Provided a minimum of 7 continuous days of successful, trouble-free, operation, which period shall begin after all performance and acceptance testing has been successfully demonstrated to the ENGINEER. All equipment contained in the work, plus all other components necessary to enable the OWNER to operate the facility in a manner that was intended, shall be complete on the substantial completion date.

17. WORK

The word "work" within these Contract Documents shall include all material, labor, tools, and all appliances, machinery, transportation, and appurtenances necessary to perform and complete the Contract, and such additional items not specifically indicated or described which can be reasonably inferred as belonging to the item described or indicated and as required by good Practice to Provide a complete and satisfactory system or structure. As used herein, "Provide" shall be understood to mean "furnish and install, complete in-place ".

CONTRACT DOCUMENTS

18. INTENT OF CONTRACT DOCUMENTS

The Contract Documents are complementary, and what is called for by one shall be as binding as if called for by all. The intent of the Documents is to describe a functionally complete Project (or part thereof) to be constructed in accordance with the Contract Documents. Any work, materials, or equipment that may reasonably be inferred from the Contract Documents as being required to produce the intended result shall be supplied whether or not specifically called for. When words which have a well-known technical or trade meaning are used to describe work, materials, or equipment, such words shall be interpreted in accordance with that meaning.

Reference to standard specifications, manuals, or codes of any technical society, organization or association, or to the laws or regulations of any governmental authority, whether such reference be specific or by implication, shall mean the latest standard specification, manual, code or laws or regulations in effect on the first published date of the Invitation to Bid, except as may be otherwise specifically stated. However, no Provision of any referenced standard specification, manual or code (whether or not specifically incorporated by reference in the Contract Documents) shall be effective to change the duties and responsibilities of OWNER, CONTRACTOR, or ENGINEER, or any of their consultants, agents, or employees from those set forth in the Contract Documents, nor shall it be effective to assign to ENGINEER, or any ENGINEER's consultants, agents, or employees, any duty or authority to supervise or direct the furnishing or performance of the work or any duty or authority to undertake responsibility contrary to the Provisions of Article LIMITATIONS ON ENGINEER'S RESPONSIBILITIES.

19. DISCREPANCIES AND OMISSIONS

Any discrepancies or omissions found in the Contract Documents shall be reported to the ENGINEER immediately. The ENGINEER will clarify discrepancies or omissions, in writing, within a reasonable time.

In resolving inconsistencies among two or more sections of the Contract Documents, Precedence shall be given in the following order:

A. CONTRACT
B. PROPOSAL
C. SUPPLEMENTARY CONDITIONS
D. INVITATION TO BID
E. INSTRUCTIONS TO BIDDERS
F. GENERAL CONDITIONS
G. SPECIFICATIONS
H. DRAWINGS

Addenda shall take Precedence over all sections referenced therein. Figure dimensions on Drawings shall take precedence over scale dimensions. Detailed Drawings shall take precedence over general Drawings.

20. CHANGES IN THE WORK

The OWNER, without notice to the Sureties and without invalidating the Contract, may order changes in the work within the general scope of the Contract by altering, adding to, or deducting from the work, the Contract being adjusted accordingly. All such work shall be executed under the conditions of the original Contract, except as specifically adjusted at the time of ordering such change.

In giving instructions, the ENGINEER may order minor changes in the work not involving extra cost and not inconsistent with the purposes of the Project, but otherwise, except in an emergency endangering life and Property, additions or deductions from the work shall be performed only in pursuance of an approved Change Order from the OWNER, countersigned by the ENGINEER.

If the work is reduced by alterations, such action shall not constitute a claim for damages based on loss of anticipated Profits.

21. EXAMINATION AND VERIFICATION OF CONTRACT DOCUMENTS

The CONTRACTOR shall thoroughly examine and become familiar with all of the various parts of these Contract Documents and determine the nature and location of the work, the general and local conditions, and all other matters, which can in any way affect the work under this Contract. Failure to make an examination necessary for this determination shall not release the CONTRACTOR from the obligations of this Contract. No verbal agreement or conversation with any officer, agent, or employee of the OWNER or with the ENGINEER either before or after the execution of this Contract shall affect or modify any of the terms or obligations herein contained.

22. DOCUMENTS TO BE KEPT ON THE JOBSITE

The CONTRACTOR shall keep one copy of the Contract Documents on the job- site, in good order, available to the ENGINEER and to his representatives.

The CONTRACTOR shall maintain on a daily basis at the jobsite, and make available to the ENGINEER on request, one current record set of the Drawings which have been accurately marked to indicate all modifications in the completed work that differ from the design information shown on the Drawings. Upon Substantial completion of the work, the CONTRACTOR shall give the ENGINEER one complete set of these marked up record Drawings.

23. ADDITIONALCONTRACT DOCUMENTS

Copies of Contract Documents or Drawings may be obtained on request from the ENGINEER and by paying the actual cost of reproducing the Contract Documents or Drawings.

24. OWNERSHIP OF CONTRACT DOCUMENTS

All portions of the Contract Documents, and copies thereof furnished by the ENGINEER are instruments of service for this Project. They are not to be used on other work and are to be returned to the ENGINEER on request at the completion of the work. Any reuse of these materials without specific written verification or adaptation by the ENGINEER will be at the risk of the user and without liability or legal expense to the ENGINEER. Such user shall hold the ENGINEER harmless from any and all damages, including reasonable attorneys' fees, from any and all claims arising from any such reuse. Any such verification and adaptation shall entitle the ENGINEER to further compensation at rates to be agreed upon by the user and the ENGINEER.

<u>THE ENGINEER</u>

25. AUTHORITY OF THE ENGINEER

The ENGINEER will be the OWNER's representative during the construction period. His authority and responsibility will be limited to the Provisions set forth in these Contract Documents. The ENGINEER will have the Authority to reject work that does not conform to the Contract Documents. However, neither the ENGINEER's authority to act under this Provision, nor any decision made by him in good faith either to exercise or not to exercise such authority, shall give rise to any duty or responsibility of the ENGINEER to the CONTRACTOR, any SUBCONTRACTOR, their respective Sureties, any of their agents or employees, or any other person performing any of the work.

26. DUTIES AND RESPONSIBILITIES OF THE ENGINEER

The ENGINEER will make visits to the site at intervals appropriate to the various stages of construction to observe the Progress and quality of the work and to determine, in general, if the work is proceeding in accordance with the intent of the Contract Documents. He will not make comprehensive or continuous review or observation to check quality or quantity of the work, and he will not be responsible for construction means, methods, techniques, sequences, or Procedures, or for safety Precautions and Programs in connection with the work. Visits and observations made by the ENGINEER shall not relieve the CONTRACTOR of his obligation to conduct comprehensive inspections of the work and to furnish materials and perform acceptable work, and to provide adequate safety Precautions, in conformance with the intent of the Contract.

The ENGINEER will make recommendations to the OWNER, in writing, on all claims of the OWNER or the CONTRACTOR arising from interpretation or execution of the Contract Documents. Such recommendations will be of factual and/or technical nature, and will not include the legal interpretation of the Contract Documents. Any necessary legal interpretation of the Contract Document will be made by the OWNER. Such recommendation shall be necessary before the CONTRACTOR can receive additional money under the terms of the Contract. Changes in work ordered by the ENGINEER shall be made in compliance with Article CHANGES IN THE WORK.

One or more Project representatives may be assigned to observe the work. It is understood that such Project representatives shall have the authority to issue notice of nonconformance and make decisions within the limitations of the authority of the ENGINEER. The CONTRACTOR shall furnish all reasonable assistance required by the ENGINEER or Project representatives for Proper observation of the work. The above-mentioned Project representatives shall not relieve the CONTRACTOR of his obligations to conduct comprehensive inspections of the work and to furnish materials and perform acceptable work, and to provide adequate safety Precautions, in conformance with the intent of the Contract.

27. LIMITATIONS ON ENGINEER'S RESPONSIBILITIES

ENGINEER will not be responsible for CONTRACTOR's means, methods, techniques, sequences, or Procedures of construction, or the safety Precautions and Programs incident thereto, and ENGINEER will not be responsible for CONTRACTOR's failure to perform or furnish the work in accordance with the Contract Documents.

ENGINEER will not be responsible for the acts or omissions of CONTRACTOR or of any SUBCONTRACTOR, any supplier, or of any other person or organization performing or furnishing any of the work.

Whenever in the Contract Documents the terms "as ordered", "as directed", "as required", "as allowed", "as approved", or terms of like effect or import are used, or the adjectives "reasonable", "suitable", "acceptable", "Proper", or "satisfactory", or adjectives of like effect or import are used to describe a requirement, direction, review or judgment of ENGINEER as to the work, it is intended that such requirement, direction, review or judgment will be solely to evaluate the work for compliance with the Contract Documents (unless there is a specific statement indicating otherwise). The use of any such term or adjective shall not be effective to assign to ENGINEER any duty or authority to supervise or direct the furnishing or performance of the work or any duty or authority to undertake responsibility contrary to the Provisions of this Article.

28. REJECTED WORK

Any defective work or nonconforming materials or equipment that may be discovered at any time prior to expiration of the warranty period shall be removed and replaced by work which shall conform to the Provisions of the Contract Documents. Any material condemned or rejected shall be removed at once from the Project site.

Failure on the part of the ENGINEER to condemn or reject bad or inferior work or to note nonconforming materials or equipment on CONTRACTOR submittals shall not be construed to imply acceptance of such work. The OWNER shall reserve and retain all of its rights and remedies at law against the CONTRACTOR and its Surety for correction of any and all latent defects discovered after the guarantee period.

29. LINES AND GRADES

Lines and grades shall be established as provided in the supplementary conditions. All stakes, marks, and other reference information shall be carefully preserved by the CONTRACTOR, and in case of their careless or unnecessary destruction or removal by him or his employees, such stakes, marks, and other information shall be replaced at the CONTRACTOR's expense.

30. SUBMITTALS

After checking and verifying all field measurements and after complying with applicable Procedures specified in Division I, GENERAL REQUIREMENTS, CONTRACTOR shall submit to ENGINEER, in accordance with the schedule for submittals for review, shop drawings, electrical diagrams, and catalog cuts for fabricated items and manufactured items (including mechanical and electrical equipment), which shall bear a stamp or specific written indication that CONTRACTOR has satisfied CONTRACTOR's responsibilities under the Contract Documents with respect to the review of the submittal. All submittals shall be identified as ENGINEER may require. The data shown shall be complete with respect to quantities, dimensions specified, performance and design criteria, materials, and similar data to enable ENGINEER to review the information. CONTRACTOR shall also submit to ENGINEER for review, with such Promptness as to cause no delay in work, all samples required by the Contract Documents. All samples shall have been checked by and accompanied by a specific written indication that CONTRACTOR has satisfied CONTRACTOR's responsibilities under the Contract Documents with respect to the review of the submission and shall be identified clearly as to material, supplier, pertinent data such as catalog numbers and the use for which intended.

Before submission of each submittal, CONTRACTOR shall have determined and verified all quantities, dimensions, specified performance criteria, installation requirements, materials, catalog numbers, and similar data with respect thereto and reviewed or coordinated each submittal with other submittals and with the requirements of the work and the Contract Documents.

At the time of each submission, CONTRACTOR shall give ENGINEER specific written notice of each variation that the submittal may have from the requirements of the Contract Documents, and, in addition, shall cause a specific notation to be made on each shop drawing submitted to ENGINEER for review and approval of each variation.

ENGINEER will review submittals with reasonable Promptness, but ENGINEER's review will be only for conformance with the design concept of the Project and for compliance with the information given in the Contract Documents and shall not extend to means, methods, techniques, sequences, or Procedures of construction (except where a specific means, method, technique, sequence, or Procedure of construction is indicated in or required by the Contract Documents) or to safety Precautions or Programs incident thereto. The review of a separate item as such will not indicate review of the assembly in which the item functions. CONTRACTOR shall make corrections required by ENGINEER, and shall return the required number of corrected copies of shop drawings and submit as required new samples for review. CONTRACTOR shall direct specific attention in writing to revisions other than the corrections called for by ENGINEER on Previous submittals.

ENGINEER's review of submittals shall not relieve CONTRACTOR from the responsibility for any variation from the requirements of the Contract Documents unless CONTRACTOR has in writing called ENGINEER's attention to each such variation at the time of submission and ENGINEER has given written approval of each such variation by a specific written notation thereof incorporated therein or accompanying the shop drawing or sample approval; nor will any approval by ENGINEER relieve CONTRACTOR from responsibility for errors or omissions in the shop drawings or from responsibility for having complied with the Provisions herein.

Where a shop drawing or sample is required by the specifications, any related work performed Prior to ENGINEER's review and approval of the pertinent submission shall be at the sole expense and responsibility of the CONTRACTOR.

31. DETAIL DRAWINGS AND INSTRUCTIONS

The ENGINEER will furnish, with reasonable Promptness, additional instructions by means of Drawings or otherwise, if, in the ENGINEER's opinion, such are required for the Proper execution of the work. All such Drawings and instructions will be consistent with the Contract Documents, true developments thereof, and reasonably inferable there from.

THE CONTRACTOR AND HIS EMPLOYEES

32. CONTRACTOR, AN INDEPENDENT AGENT

The CONTRACTOR shall independently perform all work under this Contract and shall not be considered as an agent of the OWNER or of the ENGINEER, nor shall the CONTRACTOR's SUBCONTRACTORS or employees be subagents of the OWNER or of the ENGINEER.

32. (a) ASSIGNMENT OF CONTRACT

Assignment of any part or the whole of this Contract shall be subject to review and approval of the City Commission.

33. SUBCONTRACTING

Unless modified in the Supplementary Conditions, within 10 days after the execution of the Contract, the CONTRACTOR shall submit to the ENGINEER the names of all SUBCONTRACTORS Proposed for the work, including the names of any SUBCONTRACTORS that were submitted with the Proposal. The CONTRACTOR shall not employ any SUBCONTRACTORS to which the OWNER may object to as lacking capability to properly perform work of the type and scope anticipated.

The CONTRACTOR is as fully responsible to the OWNER for the acts and omissions of his SUBCONTRACTORS and of persons either directly or indirectly employed by them as he is for the acts and omissions of persons directly employed by him.

Nothing contained in the Contract Documents shall create any contractual relationship between any SUBCONTRACTOR and the OWNER or ENGINEER.

34. INSURANCE AND LIABILITY

A. GENERAL

The CONTRACTOR shall provide (from insurance companies acceptable to the OWNER) the insurance coverage designated hereinafter and pay all costs before commencing work under this Contract. The CONTRACTOR shall furnish the OWNER with certificates of insurance specified herein showing the type, amount class of operations covered, effective dates, and date of expiration of policies, and containing substantially the following statement:

"The insurance covered by this certificate shall not be canceled or materially altered, except after 30 days' written notice has been received by the OWNER."

In case of the breach of any Provision of this Article, the OWNER, at his option, may take out and maintain, at the expense of the CONTRACTOR, such insurance as the OWNER may deem Proper and may deduct the cost of such insurance from any monies which may be due or become due the CONTRACTOR under this Contract.

B. CONTRACTOR AND SUBCONTRACTOR INSURANCE

The CONTRACTOR shall not commence work under this Contract until he has obtained all the insurance required hereunder and such insurance has been reviewed by the OWNER, nor shall the CONTRACTOR allow any SUBCONTRACTOR to commence work on his subcontract until insurance specified below has been obtained. Review of the insurance by the OWNER shall not relieve or decrease the liability of the CONTRACTOR hereunder.

C. COMPENSATION AND EMPLOYER'S LIABILITY INSURANCE

The CONTRACTOR shall maintain during the life of this Contract the statutory amount of Workmen's Compensation Insurance, in addition, Employer's Liability Insurance in an amount as specified in the Supplementary Conditions, for each occurrence, for all of his employees to be engaged in work on the Project under this Contract. In case any such work is subcontracted, the CONTRACTOR shall require the SUBCONTRACTOR to provide similar Workmen's Compensation and Employer's Liability Insurance for all of the SUBCONTRACTOR's employees to be engaged in such work.

D. GENERAL LIABILITY INSURANCE (INCLUDING AUTOMOBILE)

The CONTRACTOR shall maintain during the life of this Contract such general liability, completed operations and Products liability, and automobile liability insurance as will Provide coverage for claims for damages for personal injury, including accidental death, as well as for claims for Property damage, which may arise directly or indirectly from performance of the work under this Contract. The general liability policy shall include contractual liability assumed by the CONTRACTOR under Article **INDEMNITY.** Coverage for Property damage shall be on a "broad form" basis with no exclusions for "X, C & U". The amount of insurance to be provided shall be as specified in the Supplementary Conditions.

In the event any work under this Contract is performed by a SUBCONTRACTOR, the CONTRACTOR shall be responsible for any liability directly or indirectly arising out of the work performed by the SUBCONTRACTOR; to the extent such liability is not covered by the SUBCONTRACTOR's insurance.

The OWNER and ENGINEER, their officers, agents, and employees shall be named as Additional Insured's on the CONTRACTOR's and any SUBCONTRACTOR's general liability and automobile liability insurance policies for any claims arising out of work performed under this Contract.

E. BUILDERS RISK ALL RISK INSURANCE

Unless otherwise modified in the Supplementary Conditions, the CONTRACTOR shall secure and maintain during the life of this Contract, Builders Risk All Risk Insurance coverage in an amount equal to the full value of the facilities under construction. Such insurance shall include coverage for earthquake, landslide, flood, collapse, loss due to the results of faulty workmanship or design, and all other normally covered risks, and shall provide for losses to be paid to the CONTRACTOR, OWNER, and ENGINEER as their interests may appear.

The OWNER and ENGINEER, their officers, agents, and employees shall be named as additional insured's on the CONTRACTOR's and any SUBCONTRACTOR's Builders Risk All Risk insurance policies for any claims arising out of work performed under this Contract.

This insurance shall include a waiver of subrogation as to the ENGINEER, the OWNER, the CONTRACTOR, and their respective officers, agents, employees and SUBCONTRACTORS.

F. NO PERSONAL LIABILITY OF PUBLIC OFFICIALS

In carrying out any of the Provisions hereof in exercising any authority granted by the Contract, there will be no personal liability upon any public official.

35. INDEMNITY

To the maximum extent permitted by law, the CONTRACTOR shall indemnify and defend the OWNER and the ENGINEER, and their officers, employees, agents, and sub-consultants, from all claims and losses, including attorney's fees and litigation costs arising out of Property losses or health, safety, personal injury, or death claims by the CONTRACTOR, its SUBCONTRACTORS of any tier, and their employees, agents, or invitees regardless of the fault, breach of Contract, or negligence of the OWNER or ENGINEER, excepting only such claims or losses that have been adjudicated to have been caused solely by the negligence of the OWNER or the ENGINEER and regardless of whether or not the CONTRACTOR is or can be named a party in a litigation.

36. EXCLUSION OF CONTRACTOR CLAIMS

In performing its obligations, the ENGINEER and its consultants may cause expense for the CONTRACTOR or its SUBCONTRACTORS and equipment or material suppliers. However, those parties and their sureties shall maintain no direct action against the ENGINEER, its officers, employees, agents, and consultants for any claim arising out of, in connection with, or resulting from the engineering services performed or required to be performed.

37. TAXES AND CHARGES

The CONTRACTOR shall withhold and pay any and all sales and use taxes and all withholding taxes, whether State or Federal, and pay all Social Security charges and also all State Unemployment Compensation charges, and pay or cause to be withheld, as the case may be, any and all taxes, charges, or fees or sums whatsoever, which are now or may hereafter be required to be paid or withheld under any laws.

38. REQUIREMENTS OF STATE LAW FOR PUBLIC WORKS PROJECTS

When the Contract Documents concern public works of the state or any county, municipality, or political subdivision created by its laws, the applicable statutes shall apply. All parties to this Contract shall determine the contents of all applicable statutes and comply with their Provisions throughout the performance of the Contract.

39. CODES, ORDINANCES, PERMITS AND LICENSES

The CONTRACTOR shall keep himself fully informed of all local codes and ordinances, as well as state and federal laws, which in any manner affect the work herein specified. The CONTRACTOR shall at all times comply with said codes and ordinances, laws, and regulations, and Protect and indemnify the OWNER, the ENGINEER and their respective employees, and its officers and agents against any claim or liability arising from or based on the violation of any such laws, ordinances, or regulations. All permits, licenses and inspection fees necessary for Prosecution and completion of the work shall be secured and paid for by the CONTRACTOR, unless otherwise specified.

40. SUPERINTENDENCE

The CONTRACTOR shall keep at the project site, competent supervisory personnel. The CONTRACTOR shall designate, in writing, before starting work, a Project superintendent who shall be an employee of the CONTRACTOR and shall have complete authority to represent and to act for the CONTRACTOR. ENGINEER shall be notified in writing prior to any change in superintendent assignment. The CONTRACTOR shall give efficient supervision to the work, using his best skill and attention. The CONTRACTOR shall be solely responsible for all construction means, methods, techniques, and Procedures, and for providing adequate safety Precautions and coordinating all portions of the work under the Contract. It is specifically understood and agreed that the ENGINEER, its employees and agents, shall not have control or charge of and shall not be responsible for the construction means, methods, techniques, Procedures, or for providing adequate safety Precautions in connection with the work under Contract.

41. RECEPTION OF ENGINEER'S COMMUNICATIONS

The superintendent shall receive for the CONTRACTOR all communications from the ENGINEER. Communications of major importance will be confirmed in writing upon request from the CONTRACTOR.

The ENGINEER may schedule Project meetings for the purposes of discussing and resolving matters concerning the various elements of the work. Time and place for these meetings and the names of persons required to be Present shall be as determined by the ENGINEER. CONTRACTOR shall comply with these attendance requirements and shall also require his SUBCONTRACTORS to comply.

42. SAFETY

The CONTRACTOR shall be solely and completely responsible for conditions of the jobsite, including safety of all persons (including employees) and Property during performance of the work. This requirement shall apply continuously and not be limited to normal working hours. Safety Provisions shall conform to U.S. Department of Labor (OSHA), and all other applicable federal, state, county, and local laws, ordinances, codes, and regulations. Where any of these are in conflict, the more stringent requirement shall be followed. The CONTRACTOR's failure to thoroughly familiarize himself with the aforementioned safety Provisions shall not relieve him from compliance with the obligations and penalties set forth therein.

The CONTRACTOR shall develop and maintain for the duration of this Contract, a safety Program that will effectively incorporate and implement all required safety Provisions. The CONTRACTOR shall appoint an employee who is qualified and authorized to supervise and enforce compliance with the safety Program. The duty of the ENGINEER to conduct construction review of the work does not include review or approval of the adequacy of the CONTRACTOR's safety Program, safety supervisor, or any safety measures taken in, on, or near the construction site. The CONTRACTOR, as a part of his safety Program, shall maintain at his office or other well-known place at the jobsite, safety equipment applicable to the work as Prescribed by the aforementioned authorities, all articles necessary for giving first-aid to the injured, and shall establish the Procedure for the immediate removal to a hospital or a doctor's care of persons (including employees) who may be injured on the jobsite.

If death or serious injuries or serious damages are caused, the accident shall be reported immediately by telephone or messenger to both the ENGINEER and the OWNER. In addition, the CONTRACTOR must promptly report in writing to the ENGINEER all accidents whatsoever arising out of, or in connection with, the performance of the work whether on, or adjacent to, the site, giving full details and statements of witnesses.

If a claim is made by anyone against the CONTRACTOR or any SUBCONTRACTOR on account of any accident, the CONTRACTOR shall promptly report the facts in writing to the ENGINEER, giving full details of the claim.

43. PROTECTION OF WORK AND PROPERTY

The CONTRACTOR shall at all times safely guard and Protect from damage the OWNER's Property, adjacent Property, and his own work from injury or loss in connection with this Contract. All facilities required for Protection by federal, state, or municipal laws and regulations and local conditions must be provided and maintained.

The CONTRACTOR shall Protect his work and materials from damage due to the nature of the work, the elements, carelessness of other CONTRACTORs, or from any cause whatever until the completion and acceptance of the work. All loss or damages arising out of the nature of the work to be done under these Contract Documents, or from any unforeseen obstruction or defects which may be encountered in the Prosecution of the work, or from the action of the elements, shall be sustained by the CONTRACTOR.

44. RESPONSIBILITY OF CONTRACTOR TO ACT IN AN EMERGENCY

In case of an emergency which threatens loss or injury of Property, and/or safety of life, the CONTRACTOR shall act, without previous instructions from the OWNER or ENGINEER, as the situation may warrant. The CONTRACTOR shall notify the ENGINEER thereof immediately thereafter. Any claim for compensation by the CONTRACTOR, together with substantiating documents in regard to expense, shall be submitted to the OWNER through the ENGINEER and the amount of compensation shall be determined by agreement.

45. MATERIALS AND APPLIANCES

Unless otherwise stipulated, the CONTRACTOR shall Provide and pay for all materials, labor, water, tools, equipment, heat, light, fuel, power, transportation, construction equipment and machinery, appliances, telephone, sanitary facilities, temporary facilities and other facilities and incidentals necessary for the execution and completion of the work.

Unless otherwise specified, all materials shall be new, and both workmanship and materials shall be of good quality. The CONTRACTOR shall, if required, furnish satisfactory evidence as to the kind and quality of materials.

In selecting and/or approving equipment for installation in the Project, the OWNER and ENGINEER assume no responsibility for injury or claims resulting from failure of the equipment to comply with applicable federal, state, and local safety codes or requirements, or the safety requirements of a recognized agency, or failure due to faulty design concepts, or defective workmanship and materials.

46. CONTRACTORS' AND MANUFACTURERS' COMPLIANCE WITH STATE SAFETY, OSHA, AND OTHER CODE REQUIREMENTS

The completed work shall include all necessary permanent safety devices, such as machinery guards and similar ordinary safety items required by the state and federal (OSHA) industrial authorities and applicable local and national codes. Further, any features of the work subject to such safety regulations shall be fabricated, furnished, and installed (including OWNER-furnished equipment) in compliance with these requirements. CONTRACTORs and manufacturers of equipment shall be held responsible for compliance with the requirements included herein. CONTRACTORs shall notify all equipment suppliers and SUBCONTRACTORS of the Provisions of this Article.

47. SUBSTITUTION OF MATERIALS

Except for OWNER-selected equipment items, and items where no substitution is clearly specified, whenever any material, article, device, Product, fixture, form, type of construction, or Process is indicated or specified by patent or Proprietary name, by name of manufacturer, or by catalog number, such specifications shall be deemed to be used for the purpose of establishing a standard of quality and facilitating the description of the material or Process desired. This Procedure is not to be construed as eliminating from competition other Products of equal or better quality by other manufacturers where fully suitable in design, and shall be deemed to be followed by the words "or equal". The CONTRACTOR may, in such cases, submit complete data to the ENGINEER for consideration of another material, type, or Process that shall be substantially equal in every respect to that so indicated or specified. Substitute materials shall not be used unless approved in writing. The ENGINEER will be the sole judge of the substituted article or material.

48. TESTS, SAMPLES, AND OBSERVATIONS

The CONTRACTOR shall furnish, without extra charge, the necessary test pieces and samples, including facilities and labor for obtaining the same, as requested by the ENGINEER. When required, the CONTRACTOR shall furnish certificates of tests of materials and equipment made at the point of manufacture by a recognized testing laboratory.

The OWNER, ENGINEER, and authorized government agents, and their representatives shall at all times be Provided safe access to the work wherever it is in Preparation or Progress, and the CONTRACTOR shall Provide facilities for such access and for observations, including maintenance of temporary and permanent access.

If the Specifications, laws, ordinances, or any public authority require any work, to be specially tested or approved, the CONTRACTOR shall give timely notice of its readiness for observations. If any work should be covered up without approval or consent of the ENGINEER, it shall, if required by the ENGINEER, be uncovered for examination at the CONTRACTOR's expense.
Reexamination of questioned work may be ordered by the ENGINEER, and, if so ordered, the work shall be uncovered by the CONTRACTOR. If such work is found to be in accordance with the Contract Documents, the OWNER will pay the cost of uncovering, exposure, observation, inspection, testing and reconstruction. If such work is found to be not in accordance with the Contract Documents, the CONTRACTOR shall correct the defective work, and the cost of reexamination and correction of the defective work shall be paid by the CONTRACTOR.

49. ROYALTIES AND PATENTS

The CONTRACTOR shall pay all royalty and licenses fees, unless otherwise specified. The CONTRACTOR shall defend all suits or claims for infringement of any patent rights and shall save the OWNER and the ENGINEER harmless from any and all loss, including reasonable attorneys' fees, on account thereof.

50. CONTRACTOR'S RIGHT TO TERMINATE CONTRACT

If the work should be stopped under an order of any court or other public authority for a period of more than 3 months, through no act or fault of the CONTRACTOR, its SUBCONTRACTORS, or respective employees or if the ENGINEER should fail to make recommendation for payment to the OWNER or return payment request to CONTRACTOR for revision within 30 days after it is due, or if the OWNER should fail to pay the CONTRACTOR within 30 days after time specified in Article PARTIAL PAYMENTS, any sum recommended by the ENGINEER, then the CONTRACTOR may, upon 15 days' written notice to the OWNER and the ENGINEER, stop work or terminate this Contract and recover from the OWNER payment for all acceptable work performed and reasonable termination expenses, unless said default has been remedied.

51. CORRECTION OF DEFECTIVE WORK DURING WARRANTY PERIOD

The CONTRACTOR hereby agrees to make, at his own expense, all repairs or replacements necessitated by defects in materials or workmanship, Provided under terms of this Contract, and pay for any damage to other works resulting from such defects, which become evident within 2 years after the date of final acceptance of the work or within 2 years after the date of substantial completion established by the ENGINEER for specified items of equipment, or within such longer period as may be Prescribed by law or by the terms of any applicable special guarantee required by the Contract Documents. Un-remedied defects identified for correction during the warranty period but remaining after its expiration shall be considered as part of the obligations of the warranty. Defects in material, workmanship, or equipment which are remedied as a result of obligations of the warranty shall subject the remedied portion of the work to an extended warranty period of 2 years after the defect has been remedied.

The CONTRACTOR further assumes responsibility for a similar guarantee for all work and materials provided by SUBCONTRACTORS or manufacturers of packaged equipment components. The effective date for the start of the guarantee or warranty period for equipment qualifying as substantially complete is defined in Article SUBSTANTIAL COMPLETION, AND Article SUBSTANTIAL COMPLETION DATE, in these General Conditions.

The CONTRACTOR also agrees to hold the OWNER and the ENGINEER harmless from liability of any kind arising from damage due to said defects. The CONTRACTOR shall make all repairs and replacements promptly upon receipt of written order for same from the OWNER. If the CONTRACTOR fails to make the repairs and replacements promptly, or in an emergency where delay would cause serious risk, or loss, or damage, the OWNER may have the defective work corrected or the rejected work removed and replaced, and the CONTRACTOR and his Surety shall be liable for the cost thereof.

PROGRESS OF THE WORK

52. BEGINNING OF THE WORK

Following execution of the Contract, the CONTRACTOR shall meet with the OWNER and ENGINEER relative to his arrangements for prosecuting the work.

53. SCHEDULES AND PROGRESS REPORTS

Prior to starting the construction, the CONTRACTOR shall Prepare and submit to the ENGINEER, a Progress schedule showing the dates on which each part or division of the work is expected to be started and finished, and a Preliminary schedule for submittals. The Progress schedule for submittals shall be brought up to date and submitted to the ENGINEER at the end of each month or at such other times the ENGINEER may request.

The CONTRACTOR shall forward to the ENGINEER, at the end of each month, an itemized report of the delivery status of major and critical items of purchased equipment and material, including shop drawings and the status of shop and field fabricated work. These Progress reports shall indicate the date of the purchase order, the current percentage of completion, estimated delivery, and cause of delay, if any.

If the completion of any part of the work or the delivery of materials is behind the submitted Progress schedule, the CONTRACTOR shall submit in writing a plan acceptable to the OWNER and ENGINEER for bringing the work up to schedule.

The OWNER shall have the right to withhold Progress payments for the work if the CONTRACTOR fails to update and submit the Progress schedule and reports as specified.

54. PROSECUTION OF THE WORK

It is expressly understood and agreed that the time of beginning, rate of Progress, and time of completion of the work are the essence of this Contract. The work shall be prosecuted at such time, and in or on such part or parts of the Project as may be required, to complete the Project as contemplated in the Contract Documents and the Progress schedule.

If the CONTRACTOR desires to carry on work at night or outside the regular hours, he shall give timely notice to the ENGINEER to allow satisfactory arrangements to be made for observing the work in Progress.

55. OWNER'S RIGHT TO RETAIN IMPERFECT WORK

If any part or portion of the work completed under this Contract shall Prove defective and not in accordance with the Drawings and Specifications, and if the imperfection in the same shall not be of sufficient magnitude or importance as to make the work dangerous or unsuitable, or if the removal of such work will create conditions which are dangerous or undesirable, the OWNER shall have the right and authority to retain such work but will make such deductions in the final payment therefore as may be just and reasonable.

56. OWNER'S RIGHT TO DO WORK

Should the CONTRACTOR neglect to Prosecute the work in conformance with the Contract Documents or neglect or refuse at his own cost to remove and replace work rejected by the ENGINEER, then the OWNER may notify the Surety of the condition, and after 10 days' written notice to the CONTRACTOR and the Surety, or without notice if an emergency or danger to the work or public exists, and without Prejudice to any other right which the OWNER may have under Contract, or otherwise, take over that portion of the work which has been improperly or non timely executed, and make good the deficiencies and deduct the cost thereof from the payments then or thereafter due the CONTRACTOR.

57. OWNER'S RIGHT TO TRANSFER EMPLOYMENT

If the CONTRACTOR should abandon the work or if he should persistently or repeatedly refuse or should fail to make prompt payment to SUBCONTRACTORS for material or labor, or to persistently disregard laws, ordinances, or to prosecute the work in conformance with the Contract Documents, or otherwise be guilty of a substantial violation of any Provision of the Contract or any laws or ordinance, then the OWNER may, without Prejudice to any other right or remedy, and after giving the CONTRACTOR and Surety 10 days' written notice, transfer the employment for said work from the CONTRACTOR to the Surety. Upon receipt of such notice, such Surety shall enter upon the Premises and take possession of all materials, tools, and appliances thereon for the purpose of completing the work included under this contract and employ by Contract or otherwise, any qualified person or persons to finish the work and Provide the materials therefore, in accordance with the Contract Documents, without termination of the continuing full force and effect of this contract. In case of such transfer of employment to such Surety, the Surety shall be paid in its own name on estimates according to the terms hereof without any right of the CONTRACTOR to make any claim for the same or any part thereof.

If, after the furnishing of said written notice to the Surety, the CONTRACTOR and the Surety still fail to make reasonable Progress on the performance of the work, the OWNER may terminate the employment of the CONTRACTOR and take possession of the Premises and of all materials, tools, and appliances thereon and finish the work by whatever method he may deem expedient and charge the cost thereof to the CONTRACTOR and the Surety. In such case, the CONTRACTOR shall not be entitled to receive any further payment until the work is finished. If the expense of completing the Contract, including compensation for additional managerial and administrative services, shall exceed such unpaid balance, the CONTRACTOR and the Surety shall pay the difference to the OWNER.

58. DELAYS AND EXTENSION OF TIME

If the CONTRACTOR is delayed in the Progress of the work by any act or neglect of the OWNER or the ENGINEER, or by any separate CONTRACTOR employed by the OWNER, or by strikes, lockouts, fire, adverse weather conditions not reasonably anticipated, or acts of Nature, and if the CONTRACTOR, within 48 hours of the start of the occurrence, gives written notice to the OWNER of the cause of the potential delay and estimate of the possible time extension involved, and within 10 days after the cause of the delay has been remedied, the CONTRACTOR gives written notice to the OWNER of any actual time extension requested as a result of the aforementioned occurrence, then the Contract time may be extended by change order for such reasonable time as the ENGINEER determines. It is agreed that no claim shall be made or allowed for any damages, loss, or expense which may arise out of any delay caused by the above referenced acts or occurrences other than claims for the appropriate extension of time. No extension of time will be granted to the CONTRACTOR for delays occurring to parts of the work that have no measurable impact on the completion of the total work under this Contract. No extension of time will be considered for weather conditions reasonably anticipated for the area in which the work is being performed. Reasonably anticipated weather conditions will be based on official

records of monthly Precipitation and other historical data. Adverse weather conditions, if determined to be of a severity that would impact Progress of the work, may be considered as cause for an extension of Contract completion time.

Delays in delivery of equipment or material purchased by the CONTRACTOR or his SUBCONTRACTORS, including OWNER-selected equipment shall not be considered as a just cause for delay, unless the OWNER determines that for good cause the delay is beyond the control of the CONTRACTOR. The CONTRACTOR shall be fully responsible for the timely ordering, scheduling, complete the work is the per-diem rate, as stipulated in the Proposal. The said amount is hereby agreed upon as a reasonable estimate of the costs, which may be accrued by the OWNER after the expiration of the time of completion. It is expressly under- stood and agreed that this amount is not to be considered in the nature of a penalty, but as liquidated damages which have accrued against the CONTRACTOR. The OWNER shall have the right to deduct such damages from any amount due, or that may become due the CONTRACTOR, or the amount of such damages shall be due and collectible from the CONTRACTOR or Surety.

59. DIFFERING SITE CONDITIONS

The CONTRACTOR shall promptly, and before the conditions are disturbed, give a written notice to the OWNER and ENGINEER of:

A. subsurface or latent physical conditions at the site which differ materially from those indicated in this contract,

B. unknown physical conditions at the site, of an unusual nature, which differ materially from those ordinarily encountered and generally recognized as inherent in work of the character provided for in the Contract.

The ENGINEER will investigate the site conditions promptly after receiving the notice. If the conditions do materially so differ and cause an increase or decrease in the CONTRACTOR's cost of, or the time required for, performing any part of the work under this Contract, whether or not changed as a result of the conditions, and equitable adjustment shall be made under this Article and the Contract modified in writing accordingly.

No request by the CONTRACTOR for an equitable adjustment to the Contract under this Article will be allowed, unless the CONTRACTOR has given the written notice required; Provided that the time prescribed above for giving written notice may be extended by the OWNER.

No request by the CONTRACTOR for an equitable adjustment to the Contract for differing site conditions will be allowed if made after final payment under this Contract.

60. LIQUIDATED DAMAGES

Should the CONTRACTOR fail to complete the work, or any part thereof, in the time agreed upon in the Contract or within such extra time as may have been allowed for delays by extensions granted as Provided in the Contract, the CONTRACTOR shall reimburse the OWNER for the additional expense and damage for each calendar day, Sundays and legal holidays included, that the Contract remains uncompleted after the Contract completion date. It is agreed that the amount of such additional expense and damage incurred by reason of failure to complete the work is the per-diem rate, as stipulated in the Proposal. The said amount is hereby agreed upon as a reasonable estimate of the costs which may be accrued by the OWNER after the expiration of the time of completion. It is expressly under- stood and agreed that this amount is not to be considered in the nature of a penalty, but as liquidated damages which have accrued against the CONTRACTOR. The OWNER shall have the right to deduct such damages from any amount due, or that may become due the CONTRACTOR, or the amount of such damages shall be due and collectible from the CONTRACTOR or Surety.

61. OTHER CONTRACTS

The OWNER reserves the right to let other Contracts in connection with the work. The CONTRACTOR shall afford other CONTRACTORs reasonable opportunity for the introduction and storage of their materials and the execution of their work and shall properly connect and coordinate his work with theirs.

If any part of the work under this Contract depends for Proper execution or results upon the work of any other CONTRACTOR, utility service company or OWNER, the CONTRACTOR shall inspect and Promptly report to the ENGINEER in writing any patent or apparent defects to deficiencies in such work that render it unsuitable for such Proper execution and results. The CONTRACTOR's failure to so report shall constitute and acceptance of the work by others as being fit and Proper for integration with work under this Contract, except for latent or non-apparent defects and deficiencies in the work.

62. USE OF PREMISES

The CONTRACTOR shall confine his equipment, the storage of materials and the operation of his workers to limits shown on the Drawings or indicated by law, ordinances, permits, or directions of the ENGINEER, and shall not unreasonably encumber the Premises with his materials. The CONTRACTOR shall provide, at his own expense, the necessary rights-of-way and access to the work, which may be required outside the limits of the OWNER's Property and shall furnish the ENGINEER copies of permits and agreements for use of the Property outside that provided by the OWNER.

The CONTRACTOR shall not load nor permit any part of the structure to be loaded in any manner that will endanger the structure, nor shall CONTRACTOR subject any part of the work or adjacent Property to stresses or Pressures that will endanger it.

63. SUBSTANTIAL COMPLETION DATE

The ENGINEER may issue a written notice of substantial completion for the purpose of establishing the starting date for specific equipment guarantees, and to establish the date that the OWNER will assume the responsibility for the cost of operating such equipment. Said notice shall not be considered as final acceptance of any portion of the work or relieve the CONTRACTOR from completing the remaining work within the specified time and in full compliance with the Contract Documents. See SUBSTANTIAL COMPLETION under DEFINITIONS of these General Conditions.

64. PERFORMANCE TESTING

Operating equipment and systems shall be performance tested in the Presence of the ENGINEER to demonstrate compliance with the specified requirements. Performance testing shall be conducted under the specified design operating conditions or under such simulated operating conditions as recommended or approved by the ENGINEER. Schedule such testing with the ENGINEER at least one week in advance of the planned date for testing.

65. OWNER'S USE OF PORTIONS OF THE WORK

Following issuance of the written notice of Substantial Completion, the OWNER may initiate operation of the facility. Such use shall not be considered as final acceptance of any portion of the work, nor shall such use be considered as cause for an extension of the Contract completion time, unless authorized by a Change Order issued by the OWNER.

66. CUTTING AND PATCHING

The CONTRACTOR shall do all cutting, fitting, or patching of his work that may be required to make its several parts come together Properly and fit it to receive or be received by work of other CONTRACTORs shown upon or reasonably implied by the Drawings.

67. CLEANING UP

The CONTRACTOR shall, at all times, keep Property on which work is in Progress and the adjacent Property free from accumulations of waste material or rubbish caused by employees or by the work. Upon completion of the construction, the CONTRACTOR shall remove all temporary structures, rubbish, and waste materials resulting from his operations.

PAYMENT

68. PAYMENT FOR CHANGE ORDERS

The OWNER's request for quotations on alterations to the work shall not be considered authorization to proceed with the work expediting, delivery, and installation of all equipment and materials. Within a reasonable period after the CONTRACTOR submits to the OWNER a written request for an extension of time, the ENGINEER will Present his written opinion to the OWNER as to whether an extension of time is justified, and, if so, his recommendation as to the number of days for time extension. The OWNER will make the final decision on all requests for extension of time.

Prior to the issuance of a formal Change Order, nor shall such request justify any delay in existing work. Quotations for alterations to the work shall include substantiating documentation with an itemized breakdown of CONTRACTOR and SUBCONTRACTOR costs, including labor, material, rentals, approved services, overhead, and profit. OWNER may require detailed cost data in order to substantiate the reasonableness of the proposed costs.

Any compensation paid in conjunction with the terms of a Change Order shall comprise total compensation due the CONTRACTOR for the work or alteration defined in the Change Order. By signing the Change Order, the CONTRACTOR acknowledges that the stipulated compensation includes payment for the work or alteration plus all payment for the interruption of schedules, extended overhead, delay, or any other impact claim or ripple effect, and by such signing specifically waives any reservation or claim for additional compensation in respect to the subject Change Order.

At the OWNER's option, payment or credit for any alterations covered by a Change Order shall be determined by one or a combination of the methods set forth in A, B, or C below, as applicable:

A. UNIT PRICES

Those unit Prices stipulated in the Proposal shall be utilized where they are applicable. In the event the Change Order results in a change in the original quantity that is materially and significantly different from the original bid quantity, a new unit Price shall be negotiated upon demand of either party. Unit Prices for new items included in the Change Order shall be negotiated and mutually agreed upon.

B. LUMP SUM

A total lump sum for the work negotiated and mutually acceptable to the CONTRACTOR and the OWNER. Lump sum quotations for modifications to the work shall include substantiating documentation with an itemized breakdown of CONTRACTOR and SUBCONTRACTOR costs, including labor, material, rentals, approved services, overhead, and Profit, all calculated as specified under "C" below.

C. COST REIMBURSEMENT WORK

The term "cost reimbursement" shall be understood to mean that payment for the work will be made on a time and expense basis, that is, on an accounting of the CONTRACTOR's forces, materials, equipment, and other items of cost as required and used to do the work.

If the method of payment cannot be agreed upon Prior to the beginning of the work, and the OWNER directs by written Change Order that the work be done on a cost reimbursement basis, then the CONTRACTOR shall furnish labor, and furnish and install equipment and materials necessary to complete the work in a satisfactory manner and within a reasonable period of time. For the work performed, payment will be made for the documented actual cost of the following:

1. Labor including foremen for those hours they are assigned and participating in the cost reimbursement work (actual payroll cost, including wages, fringe benefits as established by negotiated labor agreements, labor insurance, and labor taxes as established by law). No other fixed labor burdens will be considered, unless approved in writing by the OWNER.
2. Material delivered and used on the designated work, including sales tax, if paid by the CONTRACTOR or his SUBCONTRACTOR.
3. Rental or equivalent rental cost of equipment, including necessary transportation for items having a value in excess of $100. Rental or equivalent rental cost will be allowed for only those days or hours during which the equipment is in actual use. Rental and transportation allowances shall not exceed the current rental rates prevailing in the locality. The rentals allowed for equipment will, in all cases, be understood to cover all fuel, supplies, repairs, and renewals, and no further allowances will be made for those items, unless specific agreement to that effect is made.
4. Additional bond, as required and approved by the OWNER.
5. Additional insurance (other than labor insurance) as required and approved by the OWNER.

In addition to items 1 through 5 above, an added fixed fee for general overhead and Profit shall be negotiated and allowed for the CONTRACTOR (or approved SUBCONTRACTOR) actually executing the Cost Reimbursement work.

An additional fixed fee shall be negotiated and allowed the CONTRACTOR for the administrative handling of portions of the work that are executed by an approved SUBCONTRACTOR. No additional fixed fee will be allowed for the administrative handling of work executed by a SUBCONTRACTOR of a SUBCONTRACTOR, unless by written permission from the OWNER.

The added fixed fees shall be considered to be full compensation, covering the cost of general supervision, overhead, Profit, and any other general expense. The CONTRACTOR's records shall make clear distinction between the direct costs of work paid for on a cost reimbursement basis and the costs of other work. The CONTRACTOR shall furnish the ENGINEER report sheets in duplicate of each day's cost reimbursement work no later than the working day following the performance of said work. The daily report sheets shall itemize the materials used, and shall cover the direct cost of labor and the charges for equipment rental, whether furnished by the CONTRACTOR, SUBCONTRACTOR or other forces. The daily report sheets shall provide names or identifications and classifications of workers, the hourly rate of pay and hours worked, and also the size, type, and identification number of equipment and hours operated.

Material charges shall be substantiated by valid copies of vendors' invoices. Such invoices shall be submitted with the daily report sheets, or, if not available, they shall be submitted with subsequent daily report sheets. Said daily report sheets shall be signed by the CONTRACTOR or his authorized agent.

The OWNER reserves the right to furnish such materials and equipment as he deems expedient and the CONTRACTOR shall have no claim for profit or added fees on the cost of such materials and equipment. To receive partial payments and final payment for cost reimbursement work, the CONTRACTOR shall submit to the ENGINEER, detailed and complete documented verification of the CONTRACTOR's and any of his SUBCONTRACTORS' actual costs involved in the cost reimbursement work. Such costs shall be submitted within 30 days after said work has been performed.

69. PARTIAL PAYMENTS

A. GENERAL

Nothing in this Article shall be construed to affect the right, hereby reserved, to reject the whole or any part of the aforesaid work, should such work be later found not to comply with the Provisions of the Contract Documents. All estimated quantities of work for which partial payments have been made are subject to review and correction on the final estimate. Payment by the OWNER and acceptance by the CONTRACTOR of partial payments based on periodic estimates of quantities of work performed shall not, in any way, constitute acceptance of the estimated quantities used as a basis for computing the amounts of the partial payments.

B. ESTIMATE

At least 30 days before each Progress payment falls due, as specified in the Supplementary Conditions, the CONTRACTOR shall submit to the ENGINEER a detailed estimate of the amount earned during the Preceding month for the separate portions of the work, and request payment. As used in this Article, the words "amount earned" means the value, on the date of the estimate for partial payment, of the work completed in accordance with the Contract Documents, and the value of approved materials delivered to the Project site suitable stored and Protected Prior to incorporation into the work.

ENGINEER will, within 7 days after receipt of each request for payment, either indicate in writing a recommendation of payment and present the request to OWNER, or return the request to CONTRACTOR indicating in writing ENGINEER's reasons for refusing to recommend payment. In the latter case, CONTRACTOR may, within 7 days, make the necessary corrections and resubmit the request.

ENGINEER may refuse to recommend the whole or any part of any payment if, in his opinion, it would be incorrect to make such representations to OWNER. ENGINEER may also refuse to recommend any such payment, or, because of subsequently discovered evidence or the results of subsequent inspections or tests, nullify any such payment previously recommended to such an extent as may be necessary in ENGINEER's opinion to protect the OWNER from loss because:

1. The work is defective, or completed work has been damaged requiring correction or replacement;

2. Written claims have been made against OWNER or Liens have been filed in connection with the work;

3. The Contract Price has been reduced because of Change Orders;

4. OWNER has been required to correct defective work or complete the work in accordance with Article OWNER'S RIGHT TO DO WORK;

5. Of CONTRACTOR's unsatisfactory Prosecution of the work in accordance with the Contract Documents; or

6. CONTRACTOR's failure to make payment to SUBCONTRACTORS or for labor, materials, or equipment.

C. DEDUCTION FROM ESTIMATE

Unless modified in the Supplementary Conditions, deductions from the estimate will be as described below:

1. The OWNER will deduct from the estimate, and retain as part security, 10 percent of the amount earned for work satisfactorily completed. A deduction and retainage of 10 percent will be made on the estimated amount earned for approved items of material delivered to and properly stored at the jobsite but not incorporated into the work. When the work is 50 percent complete, the OWNER may reduce the retainage to 5 percent of the dollar value of all work satisfactorily completed to date provided the CONTRACTOR is making satisfactory progress and there is no specific cause for a greater retainage. The OWNER may reinstate the retainage up to 10 percent if the OWNER determines, at his discretion, that the CONTRACTOR is not making satisfactory progress or where there is other specific cause for such withholding.

D. QUALIFICATION FOR PARTIAL PAYMENT FOR MATERIALS DELIVERED

Unless modified in the Supplementary Conditions, qualification for partial payment for materials delivered but not yet incorporated into the work shall be as described below:

1. Materials, as used herein, shall be considered to be those items which are fabricated and manufactured material and equipment. No consideration shall be given to individual purchases of less than $200 for any one item.

2. To receive partial payment for materials delivered to the site, but not incorporated in the work, it shall be necessary for the CONTRACTOR to include a list of such materials on the Partial Payment Request. At his sole discretion, the ENGINEER may approve items for which partial payment is to be made. Partial payment shall be based on the CONTRACTOR's actual cost for the materials as evidenced by invoices from the supplier. Proper storage and Protection shall be provided by the CONTRACTOR, and as approved by the ENGINEER. Final payment shall be made only for materials actually incorporated in the work and, upon acceptance of the work, all materials remaining for which advance payments had been made shall revert to the CONTRACTOR, unless otherwise agreed, and partial payments made for these items shall be deducted from the final payment for the work.

3. CONTRACTOR warrants and guarantees that title to all work, materials, and equipment covered by any Application for Payment, whether incorporated in the Project or not, will pass to OWNER at the time of payment free and clear of all liens, claims, security interests, and encumbrances.

4. If requested by the ENGINEER, the CONTRACTOR shall provide, with subsequent pay requests, invoices receipted by the supplier showing payment in full has been made.

E. PAYMENT

After deducting the retainage and the amount of all previous partial payments made to the CONTRACTOR from the amount earned, the amount due will be made payable to the CONTRACTOR. Recommendations for payment received by the OWNER less than 9 days Prior to the scheduled day for payment will not be Processed or paid until the following month.

70. CLAIMS FOR EXTRA WORK

In any case where the CONTRACTOR deems additional time or compensation will become due him under this Contract for circumstances other than those defined in Article DELAYS AND EXTENSION OF TIME, the CONTRACTOR shall notify the ENGINEER, in writing, of his intention to make claim for such time or compensation before he begins the work on which he bases the claim, in order that such matters may be settled, if possible, or other appropriate action taken. The notice of claim shall be in duplicate, in writing, and shall state the circumstances and the reasons for the claim, but need not state the amount. If such notification is not given or if the ENGINEER is not afforded proper facilities by the CONTRACTOR for keeping strict account of actual cost, then the CONTRACTOR hereby agrees to waive the claim for such additional time or compensation. Such notice by the CONTRACTOR, and fact that the ENGINEER has kept account of the cost as aforesaid, shall not in any way be construed as proving the validity of the claim.

No extension of time will be granted to the CONTRACTOR for delays resulting from extra work that have no measurable impact on the completion of the total work under this Contract. Claims for additional time or compensation shall be made in itemized detail and submitted, in writing, to the OWNER and ENGINEER within 10 days following completion of that portion of the work for which the CONTRACTOR bases his claim. Failure to make the claim for additional compensation in the manner and within the time specified above shall constitute waiver of that claim. In case the claim is found to be just, it shall be allowed and paid for as provided in Article PAYMENT FOR CHANGE ORDERS.

71. RELEASE OF LIENS OR CLAIMS

The CONTRACTOR shall indemnify and hold harmless the OWNER from all claims for labor and materials furnished under this Contract. Prior to the final payment, the CONTRACTOR shall furnish to the OWNER, as part of his final payment request, a certification that all of the CONTRACTOR's obligations on the project have been satisfied and that all monetary claims and indebtedness have been paid. The CONTRACTOR shall furnish complete and legal effective releases or waivers, satisfactory to the OWNER, of all liens arising out of or filed in connection with the work.

72. FINAL PAYMENT

Upon completion of all the work under this Contract, the CONTRACTOR shall notify the ENGINEER, in writing, that he has completed his part of the Contract and shall request final payment. Upon receipt of such notice the ENGINEER will inspect and, if acceptable, submit to the OWNER his recommendation as to acceptance of the completed work and as to the final estimate of the amount due the CONTRACTOR. Upon approval of this final estimate by the OWNER and compliance by the CONTRACTOR with Provisions in Article **RELEASE OF LIENS OR CLAIMS,** and other Provisions as may be applicable, the OWNER shall pay to the CONTRACTOR all monies due him under the Provisions of these Contract Documents.

73. NO WAIVER OF RIGHTS

Neither the inspection by the OWNER, through the ENGINEER or any of his employees, nor any order by the OWNER for payment of money, nor any payment for, or acceptance of, the whole or any part of the work by the OWNER or ENGINEER, nor any extension of time, nor any possession taken by the OWNER or its employees, shall operate as a waiver of any Provision of this Contract, or any power herein reserved to the OWNER, or any right to damages herein Provided, nor shall any waiver of any breach in this Contract be held to be a waiver of any other or subsequent breach. Acceptance or final payment shall not be final and conclusive with regards to latent defects, fraud, or such gross mistakes as may amount to fraud, or as regards the OWNER's rights under the warranty.

74. ACCEPTANCE OF FINAL PAYMENT CONSTITUTES RELEASE

The acceptance by the CONTRACTOR of the final payment shall release the OWNER and the ENGINEER, as representatives of the OWNER, from all claims and all liability to the CONTRACTOR for all things done or furnished in connection with the work, and every act of the OWNER and others relating to or arising out of the work except claims Previously made in writing and still unsettled. No payment, however, final or otherwise, shall operate to release the CONTRACTOR or his Sureties from obligations under this Contract and the Performance Bond, Payment Bond, and other bonds and warranties, as herein provided.

SUPPLEMENTARY CONDITIONS

The General Conditions are hereby revised as follows:

ARTICLE 9 "ENGINEER"

Delete Article "ENGINEER" in its entirety and substitute the following:

The person or organization identified as such in the Contract Documents. The Term "ENGINEER" means ENGINEER, ARCHITECT or his authorized representative.

ARTICLE 34 "INSURANCE & LIABILITY"

Delete Article 34 "INSURANCE & LIABILITY" (A), (B), (C), and (D) in their entirety and substitute the following:

Contractor shall maintain limits no less than those stated below:

CONTRACTOR is to secure, pay for, and file with the City of Key West, prior to commencing any work under the Contract, all certificates for workers' compensation, public liability, and property damage liability insurance, and such other insurance coverages as may be required by specifications and addenda thereto, in at least the following minimum amounts with specification amounts to prevail if greater than minimum amounts indicated. Notwithstanding any other provision of the Contract, the CONTRACTOR shall provide the minimum limits of liability insurance coverage as follows:

Auto Liability	$1,000,000	Combined Single Limit
General Liability	$2,000,000	Aggregate (Per Project)
	$2,000,000	Products Aggregate
	$1,000,000	Any One Occurrence
	$1,000,000	Personal Injury
	$ 300,000	Fire Damage/Legal
Additional Umbrella Liability	$5,000,000	Occurrence / Aggregate
Pollution Liability	$2,000,000	

CONTRACTOR shall furnish an original Certificate of Insurance indicating, and such policy providing coverage to, City of Key West named as an additional insured on a PRIMARY and NON CONTRIBUTORY basis utilizing an ISO standard endorsement at least as broad as CG 2010 (11/85) or its equivalent, (combination of CG 20 10 07 04 and CG 20 37 07 04, providing coverage for completed operations, is acceptable) including a waiver of subrogation clause in favor of City of Key West on all policies. CONTRACTOR will maintain the General Liability and Umbrella Liability insurance coverages summarized above with coverage continuing in full force including the additional insured endorsement until at least 3 years beyond completion and delivery of the work contracted herein.

Notwithstanding any other provision of the Contract, the CONTRACTOR shall maintain complete workers' compensation coverage for each and every employee, principal, officer, representative, or agent of the CONTRACTOR who is performing any labor, services, or material under the Contract. Further, CONTRACTOR shall additionally maintain the following minimum limits of coverage:

Bodily Injury Each Accident	$1,000,000
Bodily Injury by Disease Each Employee	$1,000,000
Bodily Injury by Disease Policy Limit	$1,000,000

If the work is being done on or near a navigable waterway, CONTRACTOR's workers compensation policy shall be endorsed to provide USL&H Act (WC 00 01 06 A) and Jones Act (WC 00 02 01 A) coverage if specified by the City of Key West. CONTRACTOR shall provide the City of Key West with a Certificate of Insurance verifying compliance with the workman's compensation coverage as set forth herein and shall provide as often as required by the City of Key West such certification which shall also show the insurance company, policy number, effective and expiration date, and the limits of workman's compensation coverage under each policy.

CONTRACTOR's insurance policies shall be endorsed to give 30 days written notice to the City of Key West in the event of cancellation or material change, using form CG 02 24, or its equivalent.

Certificates of Insurance submitted to the City of Key West will not be accepted without copies of the endorsements being requested. This includes additional insured endorsements, cancellation/material change notice endorsements, and waivers of subrogation. Copies of USL&H Act and Jones Act endorsements will also be required if necessary. PLEASE ADVISE YOUR INSURANCE AGENT ACCORDINGLY.

CONTRACTOR will comply with any and all safety regulations required by any agency or regulatory body including but not limited to OSHA. CONTRACTOR will notify City of Key West immediately by telephone at (305) 809-3963 any accident or injury to anyone that occurs on the jobsite and is related to any of the work being performed by the CONTRACTOR.

Add the following Article:

G. SURETY AND INSURER QUALIFICATIONS

All bonds, insurance contracts, and certificates of insurance shall be either executed by or countersigned by a licensed resident agent of the Surety or insurance company, having his place of business in the State of Florida, and in all ways complying with the insurance laws of the State of Florida. Further, the said Surety or Insurance Company shall be duly licensed and qualified to do business in the State of Florida. If requested, Contractor shall Provide Proof of Florida Licensure for all insurance companies. The City of Key West shall be named as Additional Insured on the insurance certificates.

ARTICLE 35 “INDEMNITY”

Delete Article 35 “INDEMNITY” in its entirety and substitute the following:

INDEMNITY

To the fullest extent permitted by law, the CONTRACTOR expressly agrees to indemnify and hold harmless the City of Key West, their officers, directors, agents, and employees (herein called the “indemnitees”) from liabilities, damages, losses and costs, including, but not limited to, reasonable attorney’s fees and court costs, such legal expenses to include costs incurred in establishing the indemnification and other rights agreed to in this Paragraph, to persons or property, to the extent caused by the negligence, recklessness, or intentional wrongful misconduct of the CONTRACTOR, its Subcontractors or persons employed or utilized by them in the performance of the Contract. Claims by indemnitees for indemnification shall be limited to the amount of CONTRACTOR’s insurance or $1 million per occurrence, whichever is greater. The parties acknowledge that the amount of the indemnity required hereunder bears a reasonable commercial relationship to the Contract and it is part of the project specifications or the bid documents, if any.

The indemnification obligations under the Contract shall not be restricted in any way by any limitation on the amount or type of damages, compensation, or benefits payable by or for the CONTRACTOR under workers’ compensation acts, disability benefits acts, or other employee benefits acts, and shall extend to and include any actions brought by or in the name of any employee of the CONTRACTOR or of any third party to whom CONTRACTOR may subcontract a part or all of the Work. This indemnification shall continue beyond the date of completion of the work.

ARTICLE 39 "CODES, ORDINANCES, PERMITS, AND LICENSES"

Add the following:

A. PERMIT FOR WORK WITHIN LOCAL RIGHTS-OF-WAY

The Contractor shall obtain from the City of Key West the necessary permits for work within the rights-of-way. The Contractor shall abide by all regulations and conditions, including maintenance of traffic.

B. NOISE ORDINANCE

City of Key West has a noise ordinance that allows working hours between 8:00 AM to 7:00 PM, Monday through Friday and 9:00 AM to 5:00 PM on Saturday.No work shall be performed during Sunday or City Holidays, State Holidays and National Holidays. Construction operations outside these hours and these days will require approval of the Engineer and may require a variance from the City of Key West Commission.

D. "LICENSES"

THE BIDDER MUST BE A LICENSED CONTRACTOR BY THE STATE OF FLORIDA AND SUBMIT PROOF OF SUCH WITH THE BID.

1. Within 10 days of Notice of Award, the successful Bidder must represent that he holds all applicable, county, and City of Key West licenses and permits required to do business as a contractor with respect to the work described in the Contract Documents.

2. Further, the successful Bidder must, within 10 days of Notice of Award, furnish documentation showing that, as a minimum, he has complied with the provisions of Chapter 18 of the Code of Ordinances of the City of Key West in order to enter into the Agreement contained in the Contract Documents.

3. Specifically, within 10 days after Notice of Award, the successful Bidder must demonstrate that he holds, as a minimum, the following licenses and certificates:

   a.) City of Key West Tax License Receipt;
   b.) A valid Certificate of Competency issued by the Chief Building Official of Key West, Florida
   c.) A valid occupational license issued by the City of Key West, Florida.

E. WORK DURING SPECIAL EVENTS

There shall be no work. Any construction operations during Power Boat Race Week (typically early November) and Sailboat Race Week (typically January) shall be approved by the City of Key West.

ARTICLE 42 "SAFETY"

Add the following sub article:

OCCUPATIONAL SAFETY AND HEALTH

The Contractor shall observe and comply with all applicable local, state, and federal occupational safety and health regulations during the prosecution of work under this Contract. In addition, full compliance by the Contractor with the U.S. Department of Labor's Occupational Safety and Health Standards, as established in Public Law 91-596, will be required under the terms of this Contract.

ARTICLE 43 "PROTECTION OF WORK AND PROPERTY"

Add the following Article:

HISTORIC PRESERVATION

The Contractor shall comply with Florida's Archives and Historic Act (Florida Statutes, Chapter 267) and the regulations of the local historic preservation board as applicable and protect against the potential loss or destruction of significant historical or archaeological data, sites, and properties in connection with the project.

ARTICLE 57 “OWNERS RIGHT TO TRANSFER EMPLOYMENT”

Add the following Article:

TERMINATION FOR CONVENIENCE AND RIGHT OF SUSPENSION

A. Owner shall have the right to terminate this Contract without cause by written notice of Termination to the Contractor. In the event of such termination for convenience, the Contractor’s recovery against the Owner shall be limited to that portion of the Contract amount earned through the date of termination, together with any retainage withheld and reasonable termination expenses incurred. Contractor shall not be entitled to any other or further recovery against the Owner, including, but not limited to, damages or any anticipated profit on portions of the Work not performed.

B. The Owner shall have the right to suspend all or any portions of the Work upon giving the Contractor prior written notice of such suspension. If all or any portion of the Work is so suspended, the Contractor shall be entitled to reasonable costs, expenses and time extension associated with the suspension.

ARTICLE 60 "LIQUIDATED DAMAGES"

Delete Article "LIQUIDATED DAMAGES" in its entirety and substitute the following:
LIQUIDATED DAMAGES

Should the Contractor fail to complete the work or any part thereof in the time agreed upon in the Contract Documents or within such extra time as may have been allowed for delays by extensions granted as provided in the Contract, the Contractor shall reimburse the Owner for the additional expense and damage for each calendar day, Sundays and legal holidays included, that project outlined in Contract Documents remains uncompleted after the completion date. Liquidated damages shall be assessed. It is agreed that the amount of such additional expense and damage incurred by reason of failure to complete the work is the per diem rate as stipulated in the Proposal. The said amount is hereby agreed upon as a reasonable estimate of the costs which may be accrued by the Owner after the expiration of the time of completion. It is expressly understood and agreed that this amount is not to be considered in the nature of a penalty but as liquidated damages, which have accrued against the Contractor. The Owner shall have the right to deduct such damages from any amount due or that may become due the Contractor or the amount of such damages shall be due and collectible from the Contractor or Surety.

ARTICLE 68 “PAYMENT FOR CHANGE ORDERS”

Add the following paragraph

If not initially included in the original construction agreement, Change Orders will be implemented subject to approval by by City Commission.

ARTICLE 69 "PARTIAL PAYMENTS"

Delete the first paragraph of Article "PARTIAL PAYMENTS" and substitute the following:

No more than once each month the Contractor shall submit to the Engineer a detailed estimate of the amount earned during the preceding month for the separate portions of the work and request payment. As used in this Article the words "amount earned" means the value, on the date of the estimate, for partial payment of the work completed in accordance with the Contract Documents and the value of approved materials delivered to the project site suitably stored and protected prior to incorporation into the work.
Separate Application and Certification for Payment forms will be submitted for each Notice to Proceed.

ARTICLE 69 "PARTIAL PAYMENTS"

Add the following:

Payment will be made by the Owner to the Contractor within 40 days receipt of the written recommendation of payment from the Engineer.

ARTICLE 69 “PARTIAL PAYMENTS”

Delete Sub-article C “DEDUCTION FROM ESTIMATE” in its entirety and substitute the following:

DEDUCTION FROM ESTIMATE

The OWNER will deduct from the estimate, and retain as part security, 10 percent of the amount earned for work satisfactorily completed. A deduction and retainage of 10 percent will be made on the estimated amount earned for approved items of material delivered to and properly stored at the jobsite but not incorporated into the work. When the work for an individual Notice to Proceed is 90 percent complete, the OWNER may reduce the retainage to 5 percent of the dollar value of all work satisfactorily completed to date associated with that Notice to Proceed, provided the CONTRACTOR is making satisfactory progress and there is no specific cause for a greater retainage. The OWNER may reinstate the retainage up to 10 percent if the OWNER determines, at his discretion, that the CONTRACTOR is not making satisfactory progress or where there is other specific cause for such withholding. The remaining 5 percent will be held until final completion of the entire project.

ARTICLE 69 "PARTIAL PAYMENTS"

Delete Subarticle E "PAYMENT" in its entirety and substitute the following:

PAYMENT

After deducting the retainage and the amount of all previous partial payments made to the Contractor from the amount earned the amount due will be made payable to the Contractor. Recommendations for payment received by the Owner less than 40 days prior to the scheduled day for payment will not be processed or paid until the following month.

The OWNER will withhold progress payments until the Contractor has satisfied the above conditions.

ARTICLE 72 "FINAL PAYMENT"

Delete Article "FINAL PAYMENT" in its entirety and substitute the following:

FINAL PAYMENT

Upon completion of the work the Contractor shall notify the Engineer, in writing, that he has completed it and shall request final payment. The Contractor shall be responsible for keeping an accurate and detailed record of his actual construction. Upon completion of construction and before final acceptance and payment the Contractor shall furnish the Engineer as-built drawings of his construction. Upon receipt of a request for final payment and the as-built drawings the Engineer will inspect and, if acceptable, submit to the Owner his recommendation as to acceptance of the completed work and as to the final estimate of the amount due the Contractor. Upon approval of this final estimate by the Owner and compliance by the Contractor with provisions in Article RELEASE OF LIENS OR CLAIMS, and other provisions as may be applicable, the Owner shall pay to the Contractor all monies due him under the provisions of these Contract Documents.

ARTICLE 72 "FINAL PAYMENT"

Add the following;

A. Acceptance and Final Payment.

Whenever the Contractor has completely performed the work provided for under the Contract and the Engineer has performed a final inspection and made final acceptance and subject to the terms of the Engineer will prepare a final estimate showing the value of the work as soon as the Engineer makes the necessary measurements and computations. The Engineer will correct all prior estimates and payments in the final estimate and payment. The OWNER will pay the estimate, less any sums that the OWNER may have deducted or retained under the provisions of the Contract, as soon as practicable after final acceptance of the work, provided the Contractor has met the requirements of (1) through (8) below.

The Contractor has agreed in writing to accept the balance due or refund the overpayment, as determined by the OWNER, as full settlement of his account under the Contract and of all claims in connection therewith, or the Contractor, accepted the balance due or refunded the overpayment, as determined by the OWNER, with the stipulation that his acceptance of such payment or the making of such refund does not constitute any bar, admission, or estoppel, or have any effect as to those payments in dispute or the subject of a pending claim between the Contractor and the OWNER. To receive payment based on a FINAL PAYMENT CERTIFICATE, The Contractor further agrees, by submitting a FINAL PAYMENT CERTIFICATE that any pending or future arbitration claim or suit is limited to those particulars, including the itemized amounts, defined in the original FINAL PAYMENT CERTIFICATE , and that he will commence

with any such arbitration claim or suit within 15 calendar days from and after the time of final PAYMENT of the work and that his failure to file a formal claim within this period constitutes his full acceptance of the Engineer's final estimate and payment. The overpayment refund check from the Contractor, if required, will be considered a part of any Acceptance Letter executed.

1 The Contractor has properly maintained the project, as specified hereinbefore.

2 The Contractor has furnished a sworn affidavit to the effect that the Contractor has paid all bills and no suits are pending (other than those exceptions listed, if any) in connection with work performed under the Contract and that the Contractor has not offered or made any gift or gratuity to, or made any financial transaction of any nature with, any employee of the OWNER in the performance of the Contract.

3 The surety on the contract bond consents, by completion of their portion of the affidavit and surety release subsequent to the Contractor's completion of his portion, to final payment to the Contractor and agrees that the making of such payment does not relieve the surety of any of its obligations under the bond.

4 The Contractor has furnished all required mill tests and analysis reports to the Engineer.

5 The Contractor has furnished as-built drawings in AutoCAD and Adobe PDF, in accordance with all supplied data collections and files to be compatible with Esri ArcGIS 10.2.2 Software. The current computing environment consists of:

- Microsoft SQL Server
- Windows 7/Server 2008
- ESRI GIS Platform

Interfaces and Integrations

The City of Key West uses a number of software applications critical to its core operation and mission. The proposed mobile asset data collection solution will need to interface or integrate with these existing platforms.

- Arc Collector
-ArcGIS Online
- ArcMap 10.2

ADD ARTICLE 75 RESPONSIBILITY OF CONTRACTOR TO ACT IN AN EMERGENCY

A. The city shall pay no additional compensation for hurricane and or any other acts of nature.

B. CLEANUP PROCEDURES FOR HURRICANE WARNINGS AND HURRICANE WATCH. In the event the owner or National Oceanographic and Atmospheric Administration (NOAA) issues a Tropical Storm Watch or a Hurricane Watch for the Keys, the Engineer will contact the Contractor informing him that the Watch has been established. Within four (4) hours of the notice the Contractor shall provide the Engineer with a written plan and schedule describing how and when the Contractor will remove all unnecessary items from the work area and tie down all necessary supplies and barricades in the event a Tropical Storm Warning or a Hurricane Warning is issued. The Contractor shall remove all unnecessary items from work areas and shall tie down all movable objects (under 200 lbs.) The Engineer will determine "necessary" items. The Owner shall not be liable for any financial hardship or delays caused as a result of demobilization or remobilization of work due to the above.

ADD ARTICLE 76 CITY OF KEY WEST LICENSES, PERMITS AND FEES

A. Pursuant to the Public Proposal Disclosure Act, there are a number of licenses, permits, and/or fees a Contractor REQUIRED BY THE CITY OF KEY WEST before or during construction by virtue of this construction as part of the Contract. **Payment of these licenses, permits and/or fees is the responsibility of the Contractor unless specifically excluded.** The Contractor shall verify each required license, permit, or fee before submitting the Proposal.

* * * * * *

PART 4

GROUNDWATER AND SOIL MANAGEMENT PLAN

Revised Soil and Groundwater Management Plan (Revision 2) Truman Waterfront Park Key West, Florida

E Sciences Project Number 7-0070-002
February 13, 2015

E Sciences

ENGINEERING
ENVIRONMENTAL
ECOLOGICAL

Prepared for:

Bermello Ajamil & Partners, Inc.
2601 South Bayshore Drive 10th Floor
Miami, Florida 33133

City of Key West
3132 Flagler Avenue
Key West, FL 33040

224 SE 9th Street • Fort Lauderdale, FL 33316 • Tel 954-484-8500 • Fax 954-484-5146 • www.esciencesinc.com

ENGINEERING
ENVIRONMENTAL
ECOLOGICAL

February 13, 2015

Mr. Randy P. Hollingworth
Bermello, Ajamil & Partners, Inc.
2601 South Bayshore Drive, 10th Floor
Miami, FL 33133

Subject: Revised Soil and Groundwater Management Plan – Revision 2
Truman Waterfront Park
Key West, Florida
E Sciences Project Number 7-0070-002

Dear Mr. Hollingworth:

E Sciences, Incorporated (E Sciences) is pleased to submit the enclosed Soil and Groundwater Management Plan (SMP/GMP) for the above referenced site. This SMP/GMP was developed to provide procedures and precautions to be implemented for the management of impacted soil and groundwater during construction activities associated with the development of a 23-acre park referred to as Truman Waterfront Park located on the westernmost area of Key West within the Truman Annex Naval Complex.

We appreciate the opportunity to perform these services for you and the City of Key West. Please contact us at (954) 484-8500 if you have questions regarding this information.

Sincerely,
E SCIENCES, INCORPORATED

Maria Paituvi, P.E.
Senior Engineer

Nadia G. Locke, P.E.
Associate

TABLE OF CONTENTS

1.0 INTRODUCTION 1

2.0 BACKGROUND INFORMATION 2

2.1 Truman Annex DRMO Waste Storage Area (Parcel C) 2

2.2 City-Owned Parcel K 4

2.3 Parcel E 5

2.3.1 Parcel E1 6

2.3.2 Parcel E2 6

2.3.3 Parcel E3 8

3.0 SOIL MANAGEMENT PLAN 10

3.1 Health and Safety Plan 12

3.2 Dust and Sediment Control 13

3.3 Soil Stockpile Management 14

3.4 Soil Characterization 14

3.5 Equipment Decontamination 14

3.6 Soil Reuse 16

3.7 Waste Disposal 16

3.8 Disposal Documentation 16

3.9 Tree Removal and Relocation 16

3.10 Pre-Construction Meeting 17

4.0 GROUNDWATER MANAGEMENT PLAN 18

4.1 Extent of Groundwater Impacts 18

4.2 Groundwater Management Provisions 18

4.3 Groundwater Monitoring Wells 19

5.0 SMP/GMP IMPLEMENTATION AND SUPERVISION 20

6.0 RECORD KEEPING AND NOTIFICATIONS 21

7.0 REFERENCES 22

FIGURES

1 Location Map
2 Aerial Photograph
3 Parcel Reference Map
4 Proposed Development Plan, September 2014
5 SMP/GMP Reference Map

APPENDICES

A Communication Records
B Site Rehabilitation Completion Order for Parcel E1 dated August 2001
C Select Construction Plan Set Sheets for East Quay dated 1986
D FDEP Chapter 62-713 F.A.C., Tables A & B
E Truman Waterfront LUC Area Construction Permit

1.0 INTRODUCTION

The City of Key West Naval Properties Local Redevelopment Agency (LRA) has been engaged in the acquisition, planning and permitting of the redevelopment of a portion of the former US Navy Truman Waterfront base since 1995 as allowed by the Federal Government's Base Realignment and Closure (BRAC) process. The LRA is seeking to develop a portion of surplus Navy property known as the Truman Waterfront Upland Parcels, located in Key West, Monroe County, Florida. The overall project consists of designing and implementing a thematically integrated waterfront park consistent with the character of a surrounding historic community and is named the Truman Waterfront Park. E Sciences was engaged by Bermello, Ajamil & Partners, Inc. (B&A) to prepare a Soil and Groundwater Management Plan (SMP/GMP) for the Truman Waterfront Park Project (the Site).

The Site is located at the westernmost end of Key West within the Truman Annex Naval Complex. The Site encompasses multiple properties over an approximate 23-acre area adjacent to the Florida Bay waters. The Site includes Parcel C, Parcel K and Parcel E. The soil and groundwater on these parcels have historically been impacted by former Navy activities. The Navy has undertaken remedial activities in order to achieve cleanup to allow the construction of a recreational park and the unrestricted use of the park by the public. The presence of residual impacted soils will be capped to prevent exposure to the public. The soil and groundwater management provisions presented herein have been developed to provide management protocols specifically for construction activities that might require direct exposure, handling and disposal of residual subsurface impacted soil based during excavation. Additional information regarding the history and status of the assessment and remediation activities conducted at these properties is provided in Section 2.0. The Site location is depicted in **Figure 1**. **Figure 2** provides aerial coverage for the Site.

The provisions provided within this SMP/GMP are based on the review of the current information and reports available and cited herein. The provisions may be modified based on results of future assessment or testing conducted within the subject properties that may occur prior to or during the proposed development activities or based on historical assessment information that may be discovered or provided at later time. It is also noteworthy that the environmental conditions and restrictions are based on proposed deed modifications pending concurrence and approval from the Florida Department of Environmental Protection (FDEP).

2.0 BACKGROUND INFORMATION

The following sections provide a summary of impacts and the regulatory closure status for the following properties within the Site limits:

- City-owned portion of Parcel K: herein referred to as Parcel K.
- Parcel C: herein referred to as the Former Defense Reutilization and Marketing Office Waste Storage Area (DRMO) Parcel.
- Parcel E: subdivided into Parcel E1 (north portion) and Parcel E2 (south portion) and Parcel E3 (strip of land beneath the pavement directly adjacent to waterfront).

The above-referenced parcels have been, or are currently being, addressed for historical impacts under the Department of Navy, Naval Facilities Engineering Command (NAVFAC) BRAC Program. The impacts within these parcels have been addressed to the necessary standards to permit the construction of the proposed waterfront park and the recreational use by the public. The documented soil impacts has been addressed by means of excavation and offsite disposal or the installation of an engineering control that prevents direct exposure to the impacted soil, which will be preserved as part of the park development. The location of these parcels is depicted on **Figure 3**. The following sections present a cursory summary of the history of on those parcels, regulatory status and impacts.

Based on the extensive and complex environmental history of the Site, our understanding of the environmental conditions and restrictions for each parcel was provided to the FDEP and the Navy for concurrence. Correspondence regarding FDEP and Navy concurrence is provided in **Appendix A**.

For the purposes of this SMP/GMP, the soil layer extending from zero to two feet below land surface (bls) is referred to as surface soil and subsurface soil extends below two feet bls. An engineering control may consist of different configurations that prevent the exposure to impacted soil. Engineering controls include but are not limited to the following:

- A two-foot layer of non-impacted soil.
- A concrete or asphalt cover.
- Synthetic liners.

The following sections provide brief background information for each parcel.

2.1 Truman Annex DRMO Waste Storage Area (Parcel C)

The DRMO Parcel is approximately 6.25 acres of land located at the southeastern corner of the Site. The former use of this parcel included storage and use of fuels, oils and metals. The latest regulatory and assessment information for this parcel is documented in a *Site Rehabilitation Completion Report* (SRCR) dated December 2010 prepared by CH2M HILL. This parcel underwent numerous remediation activities

between 1998 and 2010. Excavation and disposal of impacted soil were implemented in order to meet the Soil Cleanup Target Levels (SCTL) defined under FDEP Chapter 62-777, Florida Administrative Code (F.A.C.) and achieve unrestricted land use criteria. Based on review of deed documentation provided by the City of Key West (the City), soil restrictions are in effect for this property and land use is currently restricted to non-residential.

Based on information provided in the 2010 SRCR, the soil impacts at the DRMO Parcel have been remediated to meet SCTLs and it is suitable for unrestricted land use. Therefore, the report recommended that the current Land Use Controls (LUC) tied to the property deed be revoked.

A *BRAC Five Year Review of Six BRAC Environmental Sites for Naval Air Station Key West* report dated April 2014 includes additional information regarding the DRMO Parcel. According to this document, parameters of concern included inorganics (lead, antimony, iron, arsenic, manganese), semi-volatile organic compounds (SVOC) (benzo[a]pyrene, benzo(b)fluoranthene, dibenzo[a,h]anthracene, and indeno(1,2,3-cd)pyrene) and polychlorinated biphenyls (PCBs).

Based on information disclosed during a teleconference held on April 14, 2014 (attended by BRAC, FDEP Federal Programs Section Bureau of Waste Cleanup and Naval Air Station Key West representatives), FDEP's review revealed a concern regarding historic iron levels in the soil and FDEP requested additional monitoring to determine that iron has not leached into the groundwater. The results of a recent groundwater sampling event revealed no groundwater contamination impacts. Other information disclosed during this teleconference indicates that FDEP is receptive to approval of the removal of the LUCs associated with the soil at this parcel. Therefore, this SMP is based on the assumption that no surface or subsurface soil impacts remain on the DRMO parcel. The GMP is based upon the absence of groundwater impacts. Overall, it is presumed that FDEP will issue a Site Rehabilitation Completion Order (SRCO) for the parcel and this will allow unrestricted groundwater and land use. A copy of the draft minutes from the April 14, 2014 teleconference provided to us is included in **Appendix A**.

We understand that the Navy will revise the deed for the DRMO Parcel and it will allow unrestricted land and groundwater use.

2.2 City-Owned Parcel K

City-owned Parcel K is located on the Truman Annex waterfront. It historically housed multiple buildings associated with metal shops, repair shops, a lumber shed, boat and boiler shops and a foundry. The buildings were removed from this property in 1982. The storage and use of metals, solvents, fuels, acids and oil were considered potential sources of impacts at this location. The latest environmental report available for this parcel is the SRCR dated April 2014. Additional historical information on the current status for this parcel was also contained in the April 2014 BRAC 5 Year Review document. Based on review of deed documentation provided by the City, soil restrictions are in effect for this parcel and it is currently restricted to non-residential use. There are currently no groundwater use restrictions on this parcel.

Parameters of concern historically documented above FDEP SCTLs include PCBs, lead and polycyclic aromatic hydrocarbons (PAH) affecting the surface and subsurface soil. Source removal efforts were implemented between January 2012 and February 2012 in order to meet site-specific recreational use SCTLs at this parcel. The surface soil at this parcel currently meets site-specific Direct Exposure Recreational SCTLs, which allows the construction and use of the park.

The 2014 SRCR recommended that the deed restriction be revised to allow for recreational use of the parcel while maintaining the restriction on residential land use. In correspondence dated June 4, 2014, FDEP stated that the SRCR was suitable for its intent and approved as final. The FDEP would issue a SRCO upon demonstration that the deed has been revised according to the SRCR. Based on information disclosed during a teleconference held on April 14, 2014 (attended by BRAC, FDEP Federal Programs Section Bureau of Waste Cleanup and Naval Air Station Key West representatives), FDEP and BRAC are coordinating the completion of the SRCO and deed modifications.

The following table presents the SCTLs implemented for site rehabilitation. Please note that site-specific recreational SCTLs are above direct exposure residential SCTLs and therefore, those soils shall be considered impacted for the purposes of this SMP.

TABLE 1-1
Soil Cleanup Target Levels
Parcel K, NAS Key West

	Lead (mg/kg)	PCBs (mg/kg)	PAHs (mg/kg)
Residential Adult and Child	400	0.5 [b]	0.1 [b]
Recreational Youth[a]	400	1.29[b]	0.35[b]
Industrial Worker	1,400	2.6 [b]	0.7 [b]
Leachability[c]	400	17	8[d]

All values are in milligrams per kilogram (mg/kg) units.
[a] Exposure Factors were obtained from FDEP, RBCA Guidance, and recreational SCTL was calculated using assumptions provided in Appendix B.
[b] When both PCBs and PAHs were collocated, cumulative risk from both PCBs and PAHs together was aimed to be 1E-6, which is equivalent to using the apportioned target SCTL value.
[C] Selected LGW SCTL values are based on protection of groundwater to potable quality, although the area groundwater is likely in contact with saline water in the adjacent bay.
[d] Individual PAHs have LGW SCTLs ranging from 0.7 mg/kg to 77 mg/kg (see Appendix A, Table A-4).

Source: Site Rehabilitation Completion Report, Soil Removal Actions at the City-Owned Portion of Parcel K Revision No. 02 dated April 2014 and prepared by CH2M HILL.

We understand that the Navy will revise the deed for Parcel K and it will allow unrestricted recreational land use and groundwater use.

2.3 Parcel E

Based on review of deed documentation provided by the City, the current LUCs enforced on Parcel E include non-residential land use provisions and groundwater use restrictions. The requirement for engineering controls exists but is limited to a delineated area on the former location of Building 136.

Based on assessment information and the current environmental status of distinct areas within Parcel E, this SMP addresses the following sub-parcel areas independently:

- Parcel E1: also referred to as the former Building 189 site.
- Parcel E2: formerly occupied by Building 136, Building 102 and Building 104 and currently occupied by Building 103
- Parcel E3: also referred to as East Quay.

It is our understanding that the FDEP understands that the above sub-parcels present individual environmental conditions independent of the current LUC provisions. Please refer to **Figure 3** for the location of each sub-parcel. The following sections include background information and environmental conditions pertinent to each sub-parcel.

2.3.1 Parcel E1

Parcel E1 was formerly occupied by Building 189. The latest regulatory documentation available for review is the Site Rehabilitation Completion Order (SRCO) issued by FDEP for this parcel on August 7, 2001. A copy of the SRCO is included in **Appendix B**. Therefore, no groundwater or soil impacts associated with this sub-parcel of Parcel E are considered a concern for the proposed site development and land use as a park. The SMP is based upon the assumption that the Navy will revise the deed and land use restrictions will be removed for this parcel.

2.3.2 Parcel E2

Parcel E2 was formerly occupied by Building 136, Building 102 and Building 104. Building 103 remains on the property. The approximate location of these buildings is depicted on **Figure 3**. Based on the environmental impacts in different areas within Parcel E2, we have provided discussions for two functional areas: the area including Building 102, 103 and 104 and the area including Building 136.

Buildings 102, 103 and 104

Buildings 102 (Former Torpedo Overhaul and Storehouse) and 104 (Former Battery Overhaul and Storage) have been removed. Knowledge of the operations in these buildings is limited to naval submarine support activities. Hazardous materials, specifically volatile organic compounds (VOCs), SVOCs, and inorganics are likely to have been used in these buildings. The latest environmental document available for this parcel regarding soil impacts is a *Proposed Plan for Soil Remedy* dated September 19, 1999. Previous remedial action efforts at Buildings 102 and 104 included the excavation of two separate areas of impacted soil to a depth of two feet bls. Based on review of the reports cited herein, SVOCs (specifically Benzo (a) pyrene constituents) remain above FDEP SCTLs in the subsurface soil.

Building 103 (Former Central Power Plant) is still standing but is out of service. Knowledge of the operations in this building is limited to naval submarine support activities. Documented parameters of concern include SVOCs and PCBs. Removal of impacted soil in the vicinity of Building 103 conducted prior to 1999 was impeded by building foundations and concrete transformer casements in the ground. Therefore, it is concluded that subsurface soil impacts remain within this area.

Most recent information regarding remedial efforts associated with the presence of petroleum free product in the groundwater near Building 102 and Building 103 was provided in a report titled *Annual Status Report Petroleum Recovery Program* December 2005 to December 2006 and *Monthly Status Report January 2007 for Trumbo Point Fuel Farm and Truman Annex Buildings 102 and 10*3 prepared by CH2M HILL. The presence of free product in the groundwater within the area of Building 102 and Building 103 was addressed by implementation of active and passive free product recovery. However, groundwater

analytical data was not available for review to evaluate the potential presence of residual groundwater petroleum impacts in this area.

Based on information provided above, the surface soil within this area of Parcel E2 has been remediated to meet Direct Exposure Residential SCTLs and therefore meets recreational use criteria. Impacts remain above FDEP SCTLs in the subsurface soil. Therefore, an engineering control shall be implemented on this area of Parcel E and subsurface soil shall be considered as impacted soil during construction activities.

Groundwater impacts are presumed within this area of Parcel E2, therefore groundwater use restrictions and groundwater management provisions are applicable for this area.

Building 136

Building 136 served as a naval docking and support facility for more than a century. Building 136 (Shipfitters and, prior to 1951, the Plate and Mold Shop) was demolished and the debris was buried in and around the building's footprint in the 1980s, but the debris was later removed for off-site disposal. Lead, metals, solvents, and oils from building operations and demolition debris buried on site were considered potential soil parameters of concern. The latest regulatory environmental document available for this area is provided in a *Proposed Plan for Soil Remedy* dated September 19, 1999. Additional historical information was also identified in the April 2014 BRAC 5 Year Review document and the 2010 SRCR for the DRMO parcel.

Remedial efforts consisting of soil removal were implemented in this area in 1999 and 2007. COCs for this area included SVOCs, arsenic and iron. During the 1999 source removal, due to impacts remaining below the surface in the vicinity of building 136, an engineering control was implemented in order to address the residual arsenic soil impacts below two feet bls. This engineering control was incorporated into the deed restriction for Parcel E and was limited to a delineated area. Additional remedial efforts conducted in 2007, after the deed restriction was executed, removed the additional arsenic impacted soil near Building 136 to a depth of two feet bls.

No reports documenting the presence of groundwater impacts were identified or provided during the development of this document. Therefore, groundwater analytical data was not available for review to evaluate the potential presence of groundwater petroleum impacts in this area.

Based on information reviewed, no surface soil impacts are present within this area. However, we could not ascertain the presence or absence of subsurface soil impacts within this area of Parcel E2. Therefore, the subsurface soil will be considered impacted for the purposes of this SMP and an engineering control shall be implemented on this area of Parcel E. Groundwater use restrictions are in effect on this parcel

based on the current deed conditions. Groundwater restriction and management provisions will be applicable to this area of Parcel E2.

We understand that the deed will continue to have soil and groundwater land use restrictions for Parcel E2.

2.3.3 Parcel E3

Parcel E3 consists of fill soil beneath the concrete slab of the "East Quay". According to information provided by BRAC, in 1988 earthwork was conducted in this parcel to tie the seawall into the deadmen that anchor the wall. During these construction efforts, a Navy fuel line was identified in the work area. Several thousand cubic yards of petroleum-impacted soil were removed off-site as part of this construction activity. However, no documentation related to these activities has been located for review at this time. Construction plans and cross sections for this parcel dated 1986 depict the presence of diesel oil lines, tanks, an oil-water separator and other utilities. Boring logs included within the plan sheets, document the presence of petroleum product odors identified "above limestone" in the subsurface. Copies of select pages of the plan set identifying these features are provided in **Appendix C**.

Based on this limited information available and based on recommendations by BRAC, this parcel is considered to have surface and subsurface soil impacts. Groundwater use restrictions are in effect on this parcel based on the current deed conditions.

We understand that the deed will continue to have soil and groundwater land use restrictions for Parcel E3. The requirements and measures contained within this SMP/GMP regarding Parcel E3 are subject to change based on additional assessment or review of additional documentation that may be conducted at a later time.

The following table summarizes the current impacts and proposed restrictions for each parcel. The proposed restrictions are based on most recent groundwater assessment results conducted by the Navy and are subject to approval by FDEP.

Table 2.1 Summary of Existing Environmental Conditions

		Former DRMO	Parcel K	Parcel E1	Parcel E2	Parcel E3
Surface Soil	Above FDEP SCTLs		✓			✓
	Meets FDEP Residential Exposure SCTLs	✓		✓	✓	
	Meet Site-Specific Recreational SCTLs[1]		✓			
Subsurface Soil	Above FDEP SCTLs		✓		✓	✓
	Meets FDEP Residential Exposure SCTLs	✓		✓		
	Meets Site Specific Recreational SCTLs		✓			
Groundwater	Impacts Present or Presumed				✓	✓
	No Impacts	✓	✓	✓		
Restrictions	Engineering Control to prevent exposure to subsurface soil to be maintained				✓	✓
	Surface Soil to be replaced with clean fill or an engineering control to be installed over existing surface soil					✓
	Recreational Use Allowed for Surface Soil	✓	✓	✓	✓	
	Groundwater Use Restriction				✓	✓

SCTL =Soil Cleanup Target Levels defined under Florida Department of Environmental Protection (FDEP) Chapter 62-777, Florida Administrative Code (F.A.C.)

[1]Site-specific Recreational SCTL values area above the FDEP Direct Exposure Residential SCTLs (dependent on the parameter). Therefore, for the purposes of this SMP, Recreational soils are considered to be above FDEP SCTLs based on Direct Exposure Residential criteria.

3.0 SOIL MANAGEMENT PLAN

The following SMP has been developed to isolate the areas within the parcels where previous assessment activities identified soils with impacts above the Residential, Recreational and Industrial Direct Exposure SCTLs and to provide protocols and precautions that will be implemented for the management of soil excavated within the SMP area during design and construction activities for the Site. The proposed development plan is depicted on **Figure 4**.

The documented impacts within the subject parcels have been or will be addressed as follows in order to meet the regulatory requirements to construct the proposed park for the safe use of the public:

- Excavation and offsite disposal;
- Implementation of engineering controls to prevent direct exposure to subsurface impacted soil. This approach is widely implemented in similar conditions as it provides an effective barrier for the protection of the human health and the environment.

Soil impact information provided herein is based on information provided and contained within the documents referenced in Section 2.0. Table 3.1 below summarizes the soil impacts documented for each individual parcel. The areas and soil layers affected by impacts depicted on **Figure 5** are referred to as SMP areas as described herein.

Soil excavation and regulatory documentation within soil impact areas shall be conducted in accordance with FDEP Chapter 62-780.500(5) as it pertains to soil removal, treatment, and disposal.

Table 3.1 Soil Impacts and SMP Summary			
Site	**Depth Interval**	**Impacts**	**SMP Provisions**
DRMO	No Impacts	• No Impacts	•No import of soil from other parcels. •No re-use of soil beyond parcel boundaries.
Parcel K	Surface Soil	• Meets site-specific Recreational SCTLs •Above FDEP Residential SCTLs	•No re-use of soil beyond parcel boundaries. •Subject to SMP provisions.
	Subsurface Soil	• Meets site-specific Recreational SCTLs •Above Residential FDEP SCTLs	•No re-use of subsurface soil beyond parcel boundaries. •Subject to SMP provisions described in Section 3.0.
Parcel E1	No Impacts	•No Impacts	•No import of soil from other parcels. •No re-use of soil beyond parcel boundaries.
Parcel E2	Surface Soil	•No Impacts	•No import of soil from other parcels. •No re-use of soil beyond parcel boundaries.
	Subsurface Soil	•Above FDEP Residential SCTLs	•Subsurface soil excavated shall not be used above 2 feet bls within the parcel boundaries unless covered with an engineering control. •No re-use of soil beyond parcel boundaries. •If excavated, upper two feet must be replaced with a minimum of two feet of non-impacted soil or alternative engineering control. • Subject to SMP provisions described in Section 3.0.
Parcel E3	Surface Soil (Beneath concrete)	•Above FDEP Residential SCTLs	•Soil must be excavated or covered with appropriate engineering controls. •No re-use of soil beyond parcel boundaries. • Subject to SMP provisions described in Section 3.0.
	Subsurface Soil	•Above FDEP Residential SCTLs	•Soil must be covered with appropriate engineering controls. •No re-use of subsurface soil beyond parcel boundaries. • Subject to SMP provisions described in Section 3.0.

Remediation efforts in Parcel K were targeted to meet site specific Recreational SCTLs. The Recreational SCTLs are equal or above Residential Direct Exposure SCTLs and therefore, soil excavated from those areas is to be handled as impacted soil.

In the event that soil staining/discoloration or odor is identified during construction, work in the affected area shall cease and onsite personnel shall notify the project manager in order to document the findings and evaluate the potential soil management provisions and proper course of action. In the event that buried debris is encountered during construction activities, work in the affected are shall cease and the project manager must be notified to document the findings and evaluate the proper course of action. Additional information regarding notifications is provided in Section 5.0.

3.1 Health and Safety Plan

The proposed development will be conducted in areas subject to soil and groundwater restrictions due to the presence of parameters of concern. As such, the construction activities in those areas must be implemented by personnel who meet the necessary safety training requirements. These requirements include, but are not limited to training for workers who will come in direct contact with contaminated media as outlined in the Occupational Safety and Health Administration (OSHA) Standard 1910.120(e). While general requirements from this standard are outlined below the contractor shall ensure full compliance with OSHA requirements:

- General site workers (such as equipment operators, general laborers and supervisory personnel) engaged in hazardous substance removal or other activities which expose or potentially expose workers to hazardous substances and health hazards shall receive a minimum of 40 hours of instruction off the site, and a minimum of three days actual field experience under the direct supervision of a trained experienced supervisor.
- Workers on site only occasionally for a specific limited task (such as, but not limited to, land surveying, or geophysical surveying) and who are unlikely to be exposed over permissible exposure limits and published exposure limits shall receive a minimum of 24 hours of instruction off the site, and the minimum of one day actual field experience under the direct supervision of a trained, experienced supervisor.
- On-site management and supervisors who supervise employees engaged in, hazardous waste operations shall receive 40 hours initial training, and three days of supervised field experience and at least eight additional hours of specialized training at the time of job assignment on such topics as, but not limited to, the employer's safety and health program and the associated employee training program, personal protective equipment program, spill containment program, and health hazard monitoring procedure and techniques.

Prior to implementing construction activities at the Site, the contractor shall develop a site-specific Health and Safety Plan (HASP) for workers directly exposed to soil and groundwater at the Site. The HASP shall describe the known or presumed existing site conditions that may affect worker or public health and safety; the activities that will be taking place within the SMP/GMP affected areas; health and safety requirements; appropriate levels of personal protection required and the criteria for such protection; hygiene; decontamination procedures; training requirements and contingency planning in terms of communication, emergency equipment and emergency planning, as well as any appropriate monitoring or inspection requirements.

Minimum requirements to be included in the HASP include, but are not limited to:

- Description of the specific work areas and impacts associated with the proposed construction activity.
- List of key personnel responsible for site safety, response operations and protection of public health.
- Procedures to control site access.
- Specific description of levels of protection to be worn by personnel in the work area.
- Description of decontamination procedures for personnel and equipment
- Establishment of site specific emergency procedures, including route to nearest medical facility and emergency care for on-site injuries

The contractor shall be responsible for preparing and implementing the HASP in accordance with OSHA 1910(b). In the event that previously unknown conditions are discovered during the course of the construction activities, the contractor shall update and modify the HASP provisions accordingly.

FDEP has compiled templates and guidance for the preparation of HASP for similar cleanup sites. This information can be accessed at the following link:
http://www.dep.state.fl.us/waste/categories/pcp/pages/safety.htm

3.2 Dust and Sediment Control

Dust and sediment control measures shall be implemented in compliance with all applicable laws and regulations. During excavation of impacted soil, all exposed soil surfaces within the SMP area (refer to **Figure 5**) shall be kept visibly moist by water spray, or covered with continuous heavy-duty plastic sheeting or other covering to minimize emissions of particulates into the atmosphere. Soil shall not be inundated to the degree that may cause soil migration.

Vehicular access in the SMP area should be controlled and vehicles sprayed prior to exiting the Site as necessary to keep soil onsite and prevent off-site tracking of impacted soil. Parking areas, staging areas, and traffic pathways on the Site shall be cleaned as necessary to control dust emissions. Adjacent public streets shall also be cleaned immediately when soil material from the Site is visible. Soil loaded into

transport vehicles for off-site disposal shall be covered with tarps or other covering to minimize emissions into the atmosphere. The cover shall be in good condition, joined at the seams, and securely anchored.

All soil stockpiles and uncovered soils in the SMP areas shall be managed by appropriate erosion and sediment best management practices (BMPs) in accordance with the project's Erosion Control Plan (ECP) and Stormwater Pollution Prevention Plan (SWPPP). The ECP may be integral to the SWPPP and shall be developed and implemented by the contractor.

3.3 Soil Stockpile Management

Excavated soil from the SMP areas where FDEP SCTL exceedances are known shall be segregated and stockpiled separately from clean soil and placed on top of heavy-duty plastic sheeting. The excavated soil within the subject SMP area shall be stockpiled in a designated area and shall be maintained according to the ECP, applicable regulations and best management practices. A stockpile management system shall be developed prior to earthwork. The origin of the soil in each stockpile shall be documented and the stockpile tracked during relocation and disposal. Each stockpile shall be categorized and numbered. Wherever practical, excavated soil will be stockpiled in areas with improved asphalt or concrete surface and not adjacent to drainage features and water bodies. Soil stockpiles shall be covered with impervious material adequate to prevent soil transport by wind or rainwater runoff. Covers shall be maintained in good condition and inspected daily. When not covered, soil stockpile surfaces shall be kept visibly moist by water spray, as necessary.

3.4 Soil Characterization

Soil with FDEP SCTL exceedances excavated from the SMP areas shall be properly sampled by qualified staff according to the frequency required by the pre-designated disposal facility. As a minimum, sampling frequency shall be conducted as presented in Table A of FDEP Chapter 62-713 F.A.C. Sampling will be conducted for disposal characterization prior to off-site disposal or the future re-use within the Site in accordance with FDEP Standard Operating Procedures (SOP) FS 5000 Waste Sampling per FDEP Chapter 62-160, as appropriate. The qualified staff will report items out of the ordinary and will contact FDEP and the disposal facility, if necessary, to determine the need for additional testing. Soil samples will be analyzed for the presence of the parameters of concern to be determined by the selected disposal facility. Please see **Appendix D** for a copy of an excerpt of the referenced regulatory rule.

3.5 Equipment Decontamination

The contractor must designate a temporary decontamination area within each SMP area. After completing surface and subsurface earthwork, the contractor shall decontaminate the equipment and vehicles that have come in contact with impacted soil by washing off the equipment and excavator buckets with a neutral

surfactant and water mix followed by a water rinse. Decontamination shall be performed when vehicles and equipment are being transferred from one SMP area to another.

3.6 Soil Reuse

Soil re-use is an option under certain circumstances. Soil re-use is defined as the excavation of soil from one location and placement of soil for use as fill in another location within a respective parcel. All soil must remain within the site boundaries, even during re-use activities. Additionally soil excavated within a respective SMP parcel may be reused within that parcel provided that impacted soils are managed as such, and in a manner consistent with the engineering control restrictions applicable to the parcel. Table 3.1 specifically states the SMP provisions that must be followed in each case. Soil for backfill may be imported from off-site sources if soil shortages occur. The contractor will certify and provide supporting documentation that any imported soil is not contaminated prior to arriving onsite.

3.7 Waste Disposal

Soil that is excavated from the SMP area exhibiting parameter concentrations above SCTLs based on analytical results (see Section 3.4) that is not being re-used and requires off-site disposal shall be kept in distinct stockpiles and in accordance with Section 3.3 pending characterization and disposal. Impacted soil will be transported to a FDEP-approved solid waste disposal or treatment facility.

Appropriate vehicles and operating procedures will be used to prevent spillage and leakage of materials from occurring at the Site and en-route to the disposal facility. Trucks shall be securely covered prior to leaving the Site. If materials resulting from leakage or tracking are observed along the adjacent roadways, they shall immediately be cleaned and procedures modified as necessary to prevent recurrence.

3.8 Disposal Documentation

A manifest system shall be used so that impacted soils can be tracked from generation (excavation location, stockpile) to ultimate disposal. The manifests shall comply with all provisions of the appropriate transportation and disposal regulations.

The City will be considered the generator of these wastes. The Contractor shall coordinate manifest signatures with appropriate City personnel.

3.9 Tree Removal and Relocation

Tree removal and relocation may be included as part of the development scope for the Site. Trees shall not be relocated from an impacted parcel to an unrestricted parcel. In the event that tree removal is required within Parcel K and Parcel E, the affected trees will be removed from the root ball as practicable; the roots will be washed off as practical to remove soil within the root area, chipped for use as mulch or off-site disposal. Soil washing shall occur in a designated area and in a manner so as to contain the spread of impacted soil on the ground.

3.10 Pre-Construction Meeting

Prior to initiation of construction activities, a qualified staff member shall conduct a pre-construction meeting with the contractor to identify the area within the Site that was identified as the SMP area and discuss health and safety protocols and other items pertinent to soil management. Visual markers shall be placed to delineate the SMP areas prior to any site work.

4.0 GROUNDWATER MANAGEMENT PLAN

The following GMP has been developed to reduce disturbance and migration of groundwater impacts during construction activities at the Site.

4.1 Extent of Groundwater Impacts

The following information regarding groundwater impacts is based on the information summarized in Section 2.0:

- No groundwater impacts are present within the DRMO Parcel.
- No groundwater impacts are present within Parcel K.
- The presence of petroleum has been documented in Parcels E2 and E3. Groundwater restrictions are applicable to these sub-parcels.
- Groundwater impacts in Parcel E1 have been addressed to meet regulatory criteria and therefore no groundwater restrictions are deemed necessary within this sub-parcel.

Therefore, the GMP provisions are applicable to Parcel E2 and E3 only. The parameters of concern in these areas include petroleum product previously identified in the building 102 and 104 and East Quay areas. Parameters of concern for the building 136 area have not been determined based on the lack of assessment data. However, soil impacts in the area of building 136 included SVOCs, iron and arsenic. Therefore, groundwater parameters of concern for Parcel E2 include SVOC, iron, arsenic and petroleum constituents.

4.2 Groundwater Management Provisions

The following provisions apply to the GMP area:

- The contractor shall obtain all necessary dewatering permits for the project. Dewatering permits as required must be approved by FDEP and the South Florida Water Management District. In addition, a Generic Permit for Discharges from Petroleum Contaminated Sites under Chapter 62-621.300, F.A.C. must be secured by the construction contractor and approved by FDEP prior to dewatering activities in areas with impacted groundwater or areas within 500 feet of known or presumed impacted groundwater. The permit conditions must be enforced. Additional permit conditions may be required based on parameters of concern identified within the GMP.
- Groundwater may not be discharged to a storm drain or sanitary sewer unless in compliance with an approved discharge permit. Discharge into the City Waste Water Treatment Plant will need to meet influent standards and will require prior approval from the City.

- The discharge must be free of floating solids, visible foam, turbidity, or visible oil and must not create nuisances to surface waters.
- If groundwater is extracted, it must be contained, characterized and treated (if required) prior to discharge to a permitted discharge point or disposed off-site.
- Records of groundwater testing and disposal documentation shall be kept on file.
- Groundwater monitoring as required by the Dewatering Permit conditions shall be implemented.
- Groundwater shall not be used for irrigation purposes.
- No water supply wells shall be used onsite.
- Daily logs documenting dewatering activities shall be kept on file.

Please note that additional and specific requirements will be dictated by the permitting agency upon issuing the dewatering permit for the specific proposed dewatering areas.

Also note that dewatering activities conducted within the remaining parcels may affect the migration of the groundwater impacts from Parcels E2 and E3. Therefore, it is possible that depending on the extent of the dewatering conducted within other parcel areas adjacent to Parcel E2 and E3, dewatering restrictions and conditions may be required. It will be incumbent on the contractor to demonstrate that dewatering will not cause migration of impacted groundwater into un-impacted areas.

4.3 Groundwater Monitoring Wells

Existing monitoring wells must be protected from damage or replaced if damaged or removed during construction. Preconstruction and post-construction surveys of existing monitoring wells shall be conducted. The contractor shall be responsible to replace damaged monitoring wells.

5.0 SMP/GMP IMPLEMENTATION AND SUPERVISION

Prior to commencing work within the Site, the contractor shall complete and certify the Truman Waterfront LUC Area Construction Permit for submittal to the Navy for approval. The permit application shall also be submitted to FDEP for review and concurrence. The permit application form is included in **Appendix E**. This permit includes a certification that the permitee will obtain a copy of this SMP/GMP document and implement the protocols and measure described herein.

An environmental professional will be designated by the City of Key West to observe and document the construction activities as they relate to the proper soil and groundwater management and compliance with this SMP/GMP. This designated professional will conduct periodic site visits and document activities, as well as report back to the City regarding additional management measures required or improper techniques observed. This observation will be conducted on behalf of the City and does not exempt the contractor for responsibility to implement and enforce the SMP and GMP provision, nor does it substitute or exclude the notification and record keeping requirements set forth in Section 6.0 of this document.

Please note that the City will not be responsible for enforcement and implementation of the HASP.

6.0 RECORD KEEPING AND NOTIFICATIONS

Based on the presence of impacts at the Site, site contractor personnel shall document the soil and groundwater disposal practices, soil re-use activities as well as document health and safety protocols and routine briefings. The following records shall be kept on file for submittal to the City, the Navy and FDEP upon completion of development or as requested during construction activities:

- Manifests for disposal of impacted soil or groundwater.
- Laboratory analytical reports for soil and groundwater testing performed during development.
- Documentation regarding clean fill brought to the Site during development.
- Records of damaged monitoring wells and well replacement activities, if applicable.
- Daily logs of soil removed from the Site for off-site disposal.
- Documentation of stockpile tracking.
- Records of communication regarding unforeseen environmental conditions encountered.
- Records of discovery of soil staining or discoloration, or odor. This information will include descriptions of the observations, locations, notifications, as well as course of action implemented.

Questions regarding environmental conditions or discovery of potential environmental conditions not included here can be addressed to the Mr. James Bouquet with the City of Key West at (305) 809-3962 and jbouquet@cityofkeywest-fl.gov.

7.0 REFERENCES

CH2M HILL, *Annual Status Report Petroleum Recovery Program December 2005 to December 2006 Monthly Status Report January 2007 for Trumbo Point Fuel Farm and Truman Annex Buildings 102 and 103*, May 2007

CH2M HILL, *Site Rehabilitation Completion Report Soil Removal Actions at the City-Owned Portion of Parcel K, Naval Air Station Key West, Key West, Florida,* April 2014

FDEP, *correspondence regarding approval of Site Rehabilitation Completion Report Soil Removal Actions at the City-Owned Portion of Parcel K,* June 4, 2014

TetraTech, *BRAC Five Year Review for Six BRAC Environmental Sites Naval Air Station Key West,* April 2014

CH2M HILL, *Site Rehabilitation Completion Report Former Defense Reutilization and Marketing Office Truman Annex, Naval Air Station Key West, Key West, Florida,* December 2010

Naval Facilities Engineering Southern Division Command, *Finding of Suitability to Transfer Truman Annex Parcels*, Naval Air Facility, Key West, Florida,

Draft Teleconference Notes (version 2), meeting held by FDEP, BRAC, NAVFAC and NAS, April 14, 2014

Proposed Plan for Soil Remedy at Truman Annex Buildings 102 And 104 Naval Air Station, September 19, 1999

Proposed Plan for Soil Remedy at Truman Annex Buildings 103 Naval Air Station, September 19, 1999

Proposed Plan for Soil Remedy at Truman Annex Buildings 136 Naval Air Station, September 19, 1999

FDEP, *Site Rehabilitation Completion Order*, Building 189, *Naval Air Station Key West, Key West, Florida,* August 7, 2001

County of Monroe, *Quitclaim Deed, December 3, 2002*

FIGURES

Background Source: ESRI Street Map

Legend

Project Location

E Sciences, Incorporated
FL Engineering Lic. #8691
224 SE 9th Street
Ft. Lauderdale, Florida 33316
www.esciencesinc.com
Phone: 954-484-8500
Fax: 954-484-5146

Truman Waterfront Park

Section 6, Township 68S, Range 25E
Key West, Monroe County, Florida

Location Map

FIGURE
1

DRAWN BY: TV	CHECKED BY: MP	PROJECT NUMBER: 7-0070-002	SCALE: 1 "=1,000 '	DATE: 8/28/2014

P:\Projects\7-0000-0099\7-0070-002\4_figures and drawings\GIS\1. Location Map.mxd

E Sciences, Incorporated
FL Engineering Lic. #8691
224 SE 9th Street
Ft. Lauderdale, Florida 33316
www.esciencesinc.com
Phone: 954-484-8500
Fax: 954-484-5146

Truman Waterfront Park

Section 6, Township 68S, Range 25E
Key West, Monroe County, Florida

Aerial Photograph

FIGURE
2

DRAWN BY: TV	CHECKED BY: MP	PROJECT NUMBER: 7-0070-002	SCALE: 1 "=350 '	DATE: 8/28/2014

P:\Projects\7-0000-0099\7-0070-002\4_figures and drawings\GIS\2. Aerial Photograph.mxd

Legend

Project Location Former building locations are approximate based on historical documents.

E Sciences, Incorporated
FL Engineering Lic. #8691
224 SE 9th Street
Ft. Lauderdale, Florida 33316
www.esciencesinc.com
Phone: 954-484-8500
Fax: 954-484-5146

Truman Waterfront Park

Section 6, Township 68S, Range 25E
Key West, Monroe County, Florida

Parcel Reference Map

FIGURE 3

DRAWN BY: LG	CHECKED BY: MP	PROJECT NUMBER: 7-0070-002	SCALE: 1 "=350 '	DATE: 10/23/2014

O:\Projects\7-0000-0099\7-0070-0024_figures and drawings\GIS\Parcel Reference Map.mxd

E Sciences, Incorporated
FL Engineering Lic. #8691
224 S.E. 9th Street
Fort Lauderdale, FL 33316
www.esciencesinc.com
Phone: 954-484-8500
Fax: 954-484-5146

Truman Waterfront Park

Section 6, Township 68S, Racnge 25E
Key West, Monroe County, Florida

Proposed Development Plan September 2014

FIGURE 4

DRAWN BY: LG	CHECKED BY:	PROJECT NUMBER: 7-0070-002	SCALE: NTS	DATE: 10/8/2014

Soil and Groundwater Impacts and SMP/GMP Summary		
Impacts		**Provisions**
No Impacts	• No Impacts	•No import of soil from other parcels. •No re-use of soil beyond parcel boundaries.
Surface Soil	• Meets site-specific Recreational SCTLs •Above FDEP SCTLs	•No re-use of soil beyond parcel boundaries. •Subject to SMP provisions presented in Section 3.0 of Soil and Groundwater Management Plan dated February 6, 2015..
Subsurface Soil	•Above FDEP SCTLs	•No re-use of soil beyond parcel boundaries •Subject to SMP provisions presented in Section 3.0 of Soil and Groundwater Management Plan dated February 6, 2015..
Surface Soil	•No Impacts	•No import of soil from other parcels. •No re-use of soil beyond parcel boundaries.
Subsurface Soil	•Above FDEP SCTLs	•Subsurface soil excavated shall not be used above 2 feet bls within the parcel boundaries unless covered with an engineering control. •No re-use of soil beyond parcel boundaries. •If excavated, upper two feet must be replaced with a minimum of two feet of non-impacted soil or alternative engineering control. •Subject to SMP provisions presented in Section 3.0 of Soil and Groundwater Management Plan dated February 6, 2015.
Groundwater	•Groundwater Impacts documented.	•Subject to GMP provisions presented in Section 4.0 of Soil and Groundwater Management Plan dated February 6, 2015.
Surface Soil	•Above FDEP SCTLs	•Soil must be excavated or covered with appropriate engineering controls. •No re-use of soil beyond parcel boundaries. •Subject to SMP provisions presented in Section 3.0 of Soil and Groundwater Management Plan dated February 6, 2015..
Subsurface Soil	•Above FDEP SCTLs	•Soil must be excavated or covered with appropriate engineering controls. •No re-use of soil beyond parcel boundaries. •Subject to SMP provisions presented in Section 3.0 of Soil and Groundwater Management Plan dated February 6, 2015.
Groundwater	•Groundwater Impacts documented.	•Subject to GMP provisions presented in Section 4.0 of Soil and Groundwater Management Plan dated February 6, 2015.

Note: Refer to the SMP/GMP text for additional information.

E Sciences, Incorporated
FL Engineering Lic. #8691
224 SE 9th Street
Ft. Lauderdale, Florida 33316
www.esciencesinc.com
Phone: 954-484-8500
Fax: 954-484-5146

Truman Waterfront Park

Section 6, Township 68S, Range 25E
Key West, Monroe County, Florida

SMP and GMP Reference Map

FIGURE 5

DRAWN BY: LG	CHECKED BY: MP	PROJECT NUMBER: 7-0070-002	SCALE: 1 "=350 '	DATE: 2/6/2015

P:\Projects\7-0000-0099\7-0070-0024_figures and drawings\GIS\SMP Reference Map.mxd

APPENDIX A

From:	James Bouquet
To:	Barney, David A CIV NAVFACHQ, BRAC PMO
Cc:	dcraig@keywestcity.com; dbradsha@keywestcity.com; rhollingworth@bermelloajamil.com; Nadia Locke; Amy.Twitty@CH2M.com; Vaught,Tracie (Tracie.Vaught@dep.state.fl.us); Fielding, Thuane B CIV NAVFAC HQ, BRAC PMO; aperez@perezeng.com; Gary Volenec
Subject:	RE: Truman Waterfront Parcel Restrictions
Date:	Tuesday, October 07, 2014 11:32:43 AM

David:

Yes, the existing survey does indicate a "gas line" running under the pier. Our original intent was to remove all of the concrete pavement and replace with new patterned concrete and landscaping. Based on your email , the Navy will now require that soil along the quay not covered with pavement will be under a 2 foot cap (or geomembrane layer) similar to sub-parcel E2, correct?

Are there asbuilts or information available that indicate the extent of soil removal and clean backfill replacement? Again, our plans for this area are primarily surficial and the knowledge that several feet of clean soil existing at the surface would be important from a design, soil management plan and ultimately cost perspective.

Jim

-----Original Message-----
From: Barney, David A CIV NAVFACHQ, BRAC PMO
[mailto:david.a.barney@navy.mil]
Sent: Tuesday, October 07, 2014 11:10 AM
To: James Bouquet
Cc: dcraig@keywestcity.com; dbradsha@keywestcity.com; rhollingworth@bermelloajamil.com; nlocke@esciencesinc.com; Amy.Twitty@CH2M.com; Vaught,Tracie (Tracie.Vaught@dep.state.fl.us); Fielding, Thuane B CIV NAVFAC HQ, BRAC PMO
Subject: RE: Truman Waterfront Parcel Restrictions

Jim,

As I currently understand the circumstances of the Truman Waterfront Parcel Restrictions, the Navy generally agrees with the summary provided below for sub-parcels E1 and E2. However, regarding sub-parcel E3 (the pier) after further discussions it is my understanding that circa 1988, the East Seawall (the pier) was expanded seaward. A significant amount of earthwork was required to tie the new seawall into existing deadmen that anchor the wall. The long tie-rods were replaced during which work a Navy fuel line was identified in the work area. Several thousand cubic yards of petroleum contaminated soil were removed and taken off site as part of this construction activity. However, at this time, the Navy and FDEP have not been able to locate any reports describing the petroleum contaminated soil removal (nature and extent, potential impact to groundwater) or any analytical information on the new fill brought in for the expansion of the seawall. Until such information can be obtained, and concurrence provided to eliminate necessary land use controls, we recommend including appropriate handling of the soil and groundwater at sub-Parcel E3 in your soil management plan.

r/

David Barney
BRAC Environmental Coordinator
Naval Facilities Engineering Command
BRAC Program Management Office East
571 Shea Memorial Drive
South Weymouth, MA 02190

Phone: 617-753-4656
US Mail Address: PO Box 169
Email: david.a.barney@navy.mil

-----Original Message-----
From: James Bouquet [mailto:jbouquet@cityofkeywest-fl.gov]
Sent: Tuesday, September 30, 2014 3:44 PM
To: Barney, David A CIV NAVFACHQ, BRAC PMO
Cc: dcraig@keywestcity.com; dbradsha@keywestcity.com; rhollingworth@bermelloajamil.com; nlocke@esciencesinc.com
Subject: RE: Truman Waterfront Parcel Restrictions

Thanks David and I look forward to working with you.

Let me know what the City or our consulting team can do to expedite the process.

Jim

-----Original Message-----
From: Barney, David A CIV NAVFACHQ, BRAC PMO
[mailto:david.a.barney@navy.mil]
Sent: Tuesday, September 30, 2014 3:36 PM
To: James Bouquet
Subject: RE: Truman Waterfront Parcel Restrictions

Hi Jim,

I am working with one of our Real Estate Specialist (Stephanie Zamorski) on the survey/legal description concerns. I am also working with Amy to better understand the LUC descriptions and what needs to be communicated to, and received from, FDEP to follow up on the bullet points from the initial email from Maria Paituvi below.

r/

David Barney
BRAC Environmental Coordinator
Naval Facilities Engineering Command
BRAC Program Management Office East
571 Shea Memorial Drive
South Weymouth, MA 02190

Phone: 617-753-4656
US Mail Address: PO Box 169
Email: david.a.barney@navy.mil

-----Original Message-----
From: James Bouquet [mailto:jbouquet@cityofkeywest-fl.gov]
Sent: Tuesday, September 30, 2014 2:58 PM
To: Barney, David A CIV NAVFACHQ, BRAC PMO
Subject: FW: Truman Waterfront Parcel Restrictions

David B

Should have directed this to you.

I will be asked why/when was it determined that the City was responsible for surveying/legal descriptions of the environmental parcels? I can see the City preparing descriptions for utility easements effected by the proposed project, but not sure how that relates to the Navy's environmental work?

Jim

-----Original Message-----
From: Criswell, David CIV NAVFAC HQ, BRAC PMO [mailto:david.criswell@navy.mil]
Sent: Tuesday, September 30, 2014 9:35 AM
To: James Bouquet; Barney, David A CIV NAVFACHQ, BRAC PMO
Cc: nlocke@esciencesinc.com; Amy.Twitty@ch2m.com; rhollingworth@bermelloajamil.com; dbradsha@keywestcity.com; dcraig@keywestcity.com; James K. Scholl; mpaituvi@esciencesinc.com; Preston, Gregory C CIV NAVFACHQ, BRAC PMO; tracie.vaught@dep.state.fl.us; Zamorski, Stephanie CIV NAVFACHQ, BRAC PMO
Subject: RE: Truman Waterfront Parcel Restrictions

Jim,

Thank you for reaching out to the "New Dave". One thing I wanted to remind the City of is the need for a survey for each parcel on which the Navy will be releasing the restrictions. Most pressing is the release of restrictions for Parcel K. The Navy needs a survey specific to the Parcel where we are releasing the restrictions. Similar surveys will be needed for the DRMO Parcel and the Parcel E subparcels. Please work with Dave Barney and Amy Twitty to coordinate the requirements.

It has been a pleasure to work with you all and I look forward to visiting Key West again to see the new park!

David Criswell

-----Original Message-----
From: James Bouquet [mailto:jbouquet@cityofkeywest-fl.gov]
Sent: Tuesday, September 30, 2014 8:17 AM

To: Barney, David A CIV NAVFACHQ, BRAC PMO
Cc: nlocke@esciencesinc.com; Amy.Twitty@ch2m.com; rhollingworth@bermelloajamil.com; dbradsha@keywestcity.com; dcraig@keywestcity.com; James K. Scholl; mpaituvi@esciencesinc.com; Criswell, David CIV NAVFAC HQ, BRAC PMO; Preston, Gregory C CIV NAVFACHQ, BRAC PMO; tracie.vaught@dep.state.fl.us
Subject: FW: Truman Waterfront Parcel Restrictions

David:

My name is Jim Bouquet and I am the City of Key West Project Manager for the Truman Waterfront Park Project. As David Criswell is retiring, I am forwarding you this email chain regarding preparation of a draft Soil Management Plan/Groundwater Management Plan to support construction of the proposed park.

As indicated below, Nadia Locke of E-Sciences (the project's environmental consultant) has requested the Navy's conformation of the proposed land use controls (LUCs) for the Truman site, specially as related to the proposed Parcel E subdivisions. Our understanding of these LUCs are based on a presentation by the Navy at the July RAB meeting held in Key West and subsequent discussions with the Navy's consultant CH2M Hill (Amy Twitty). Note that FDEP (Tracie Vaught) has concurred with the proposed LUCs.

We would like to submit a draft Soil Management /Groundwater Management Plan to both the Navy and FDEP during October for review and comment. To meet this schedule, your timely feedback to this email will be appreciated. As you are aware, this Plan and agreement on the LUCs are critical to revising/amending the existing deed for the Site, which will be required prior to commencing construction planned for early Summer 2016.

Feel free to contact and discuss directly with Nadia and her team.

It is our understanding that the BRAC Program Management Office (Greg Preston) will be taking the lead in revising the existing deed. Please let me know if you require additional information from the City to expedite this process.

Thanks and please contact me with any questions.

Jim Bouquet, P.E.

305.809.3962

From: Vaught,Tracie [mailto:Tracie.Vaught@dep.state.fl.us <mailto:Tracie.Vaught@dep.state.fl.us>]
Sent: Tuesday, September 23, 2014 1:55 PM
To: Criswell, David CIV NAVFAC HQ, BRAC PMO; Amy.Twitty@CH2M.com <mailto:Amy.Twitty@CH2M.com> ; James Bouquet; Randy Hollingworth; nlocke@esciencesinc.com <mailto:nlocke@esciencesinc.com>
Cc: Barney, David A CIV NAVFACHQ, BRAC PMO
Subject: RE: Truman Waterfront Parcel Restrictions

The descriptions provided below are correct. I would like to emphasize that the groundwater does have a land use control which will require the groundwater to be handled accordingly if it is impacted in any way during the construction of the Truman Annex Park. The only documents that have been provided with official DEP approval are documents that you already have in your possession.

Respectfully,

Tracie L. Vaught

Bob Martinez Center

2600 Blairstone Road

Mail Station 4535

Tallahassee, Florida, 32399

Tracie.vaught@dep.state.fl.us <mailto:Tracie.vaught@dep.state.fl.us>

Office number (850) 245-8998

-----Original Message-----

From: Criswell, David CIV NAVFAC HQ, BRAC PMO [mailto:david.criswell@navy.mil <mailto:david.criswell@navy.mil>]
Sent: Tuesday, September 23, 2014 1:04 PM
To: Vaught,Tracie
Subject: FW: Truman Waterfront Parcel Restrictions

-----Original Message-----

From: Maria Paituvi [mailto:mpaituvi@esciencesinc.com <mailto:mpaituvi@esciencesinc.com>]

Sent: Tuesday, September 23, 2014 11:05 AM

To: Criswell, David CIV NAVFAC HQ, BRAC PMO; Amy.Twitty@CH2M.com <mailto:Amy.Twitty@CH2M.com>

Cc: Nadia Locke; jbouquet@keywestcity.com <mailto:jbouquet@keywestcity.com> ; Randy Hollingworth (RHollingworth@bermelloajamil.com <mailto:RHollingworth@bermelloajamil.com>)

Subject: Truman Waterfront Parcel Restrictions

Good afternoon David and Amy,

Thank you for providing us with so much information to assist us with preparing the soil management plan for the Truman Waterfront Project. We have reviewed the extensive documentation you have provided. We feel as though we have a good handle on Parcel K and the DRMO parcel. As you already know, Parcel E is the challenging part. We believe that we are at a point where we could use your assistance once again by reviewing our understanding and providing confirmation or clarification.

Based on documents provided and additional information provided by the City, this

is our current understanding of the existing and proposed restrictions on Parcel E for your review and confirmation:

. The parcel was subdivided into Parcels E1, E2 and E3 in order to separate areas with different types of restrictions in order to facilitate the development of the proposed park.

o Parcel E1: This site (Building 189) received an SRCO and therefore can be considered as a clean site (soil and groundwater) for the purpose of development. No soil or groundwater management provision will required for this site during construction of the proposed park and there will be no land use controls.

o Parcel E2: This site includes former Buildings 102, 103, 104 and 136. Historical soil impacts above 2 feet have been addressed to residential standards. Soil impacts remain below 2 feet. Therefore, soil management provisions will address the presence of impacted soil below 2 feet by maintaining the existing engineering control of two feet of clean fill across Parcel E2. Groundwater use restrictions will remain in place but there will be no land use restrictions that will prevent use of this parcel as a recreational park and playground as long as the engineering control remains in pla

o Parcel E3: No soil or groundwater impacts are present. Therefore, no soil or groundwater management restrictions will be required.

. We understand that FDEP was engaged in the discussions during a meeting that occurred in July 2014 where it was agreed by all parties that the Navy and City would employ different land use controls of those subparcels separately and that FDEP concurs in concept with the information presented above. We further understand that the development and use the proposed park is allowable and that there will be no land use restrictions to prevent this type of land use. Are there meeting minutes or any other type of documentation confirming FDEP's concurrence?

. It is the City's understanding that BRAC will be revising the deeds for Parcel E2 and Parcel K to allow for recreational use, and the deeds for Parcels E1, E3 and the DRMO parcel to remove all land use restrictions.

We understand that the history and regulatory interaction for this site is complex and we appreciate your cooperation and insight as we try to develop the soil management plan and convey this information in the most efficient and clear manner.

Please don't hesitate to call us to discuss.

Thank you,

Maria Paituvi, P.E.

Senior Engineer

Description: Description: C:\Users\mpaituvi\AppData\Roaming\Microsoft\Signatures\image001.jpg

224 SE 9th Street

Fort Lauderdale, FL 33316

954/484-8500 Telephone

954/484-5146 Fax

305/984-9162Cell

mpaituvi@esciencesinc.com <mailto:mpaituvi@esciencesinc.com>
<mailto:mpaituvi@esciencesinc.com <mailto:mpaituvi@esciencesinc.com> >

www.esciencesinc.com <http://www.esciencesinc.com>
<http://www.esciencesinc.com/ <http://www.esciencesinc.com/> >

Orlando - Fort Lauderdale - Miami - DeLand

Miami-Dade County CBE, SFWMD SBE

Image removed by sender. <http://survey.dep.state.fl.us/?refemail=Tracie.Vaught@dep.state.fl.us>

Total Control Panel Login

To: nlocke@esciencesinc.com Remove this sender from my allow list

From: jbouquet@cityofkeywest-fl.gov

You received this message because the sender is on your allow list.

Maria Paituvi

From: Amy.Twitty@CH2M.com
Sent: Tuesday, September 09, 2014 4:13 PM
To: Maria Paituvi; Nadia Locke
Cc: jbouquet@keywestcity.com; david.criswell@navy.mil; art.sanford.ctr@navy.mil
Subject: RE: Truman Waterfront Park-Soil Management Plan - Request for Documents
Attachments: D Scale drawing Pages from Project Completion Rpt_DRMO.pdf; Figure 2-7 EC-G from Project Completion Rpt_DRMO-2.pdf

Maria – Regarding your first bullet below, please refer to Figure 8 (Summary of Risk-Based Corrective Action Analysis Technical Memorandum) which shows the residual BEQ concentrations from 2 to 4 feet bls. We compared those BEQ results to leachability criteria (8 mg/kg) and all were below; therefore, no removal actions were necessary based on BEQs. However, some results exceeded residential (0.1 mg/kg), recreational (0.35 mg/kg), and industrial (0.7 mg/kg) criteria for BEQs (although it appears some of our color coding is incorrect for some samples). Thus, in the event that subsurface soil >2 ft bls is excavated and brought to the surface, direct exposure to these soils could become an issue and would need to be managed accordingly.

Regarding the second bullet, I have a copy of a 2006 Tech Memo Former DRMO Site. I have uploaded it to the same ftp site as before:

https://transfer.ch2m.com

Then find the "pub" folder and then the "KeyWestDocs" folder. I'm not sure if this full link will work but you can try it (I am an internal client so I can't test it):

https://transfer.ch2m.com/pub/KeyWestDocs

Please note this week's user ID and Password is:
Username = **ext\Innovation**
Password = **ehulem45**

And yes, iron is the only gw COC.

For your third bullet, this one is a little trickier! I have some free product recovery reports that include Parcel E that I will look for. At a minimum, the portion of Parcel E associated with Building 189 received a Site Rehabilitation Completion Order from FDEP and should remove LUCs from Building 189 and north (not sure there was ever anything to the north anyway). The arsenic left in soil near Building 136 was removed during the DRMO excavation activities (you have that completion report). See figures attached regarding the Engineering Control area G (EC-G) that was removed to 2 ft. The SI (1998) and SSI (1999) reports show some of the soil maps from Parcel E. You also have these reports.

More to follow…

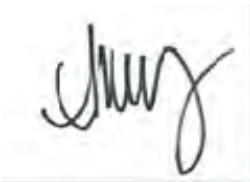

From: Maria Paituvi [mailto:mpaituvi@esciencesinc.com]
Sent: Monday, September 08, 2014 9:49 AM
To: Twitty, Amy/NVR; Nadia Locke
Cc: jbouquet@keywestcity.com
Subject: RE: Truman Waterfront Park-Soil Management Plan - Request for Documents

Hello Amy,
Thank you for all the files. We are trying to sort through the directly relevant information as it is available in order to prepare the Soil and Groundwater Management Plan for the development of the Truman Waterfront Park. That is why we requested information and documents associated with soil and groundwater delineation for DRMO, Parcel K and Parcel E as they would assist us greatly of depicting an accurate description of the site conditions and allow us to develop the appropriate management measures accordingly. Based on the information reviewed, we have the following understanding:

- Parcel K meets Recreational standards above 2 ft bls and there is no residual contamination above Residential standards below 2 ft. Therefore, we can draft the soil management plan under the provision that only soil above 2 ft is impacted above residential standards. We understand that this site was subject a Risk Based Corrective Action as documented on the Summary of Risk-Based Corrective Action Analysis Technical Memorandum prepared by CH2M Hill dated August 13, 2010. The groundwater is not impacted and there will be no groundwater controls necessary on Parcel K.
- For the DRMO, excavation efforts addressed the surface and subsurface soil impacts and the site meets residential standards. Historical assessment was based on risk characterization and assessment documented in Decision Document for Ten Base Realignment and Closure (BRAC) Sites by TetraTech dated April 2002 and Technical Memorandum – Former DRMO Site prepared by CH2M Hill dated 2007. Could we request a copy of the 2007 CH2M Hill document? We understand that besides the iron, there are no issues related to groundwater and it is anticipated that once this is resolved there will be no LUCs on groundwater.
- We are still trying to locate updated information regarding the groundwater contamination in Parcel E and the delineated soil impacts there. I understand the that entire site is restricted for non-residential use. Are we to assume that all soil at the Site is impacted above residential standards or are there delineation areas available? Based on Decision Document for Ten Base Realignment and Closure (BRAC) Sites by TetraTech dated April 2002, soil impacts at Building 102, 103 and 104 had been addressed and no further action was supported by a residual risk assessment performed for those sites. Arsenic soil contamination remained at the Building 136 site and engineering controls were implemented there. Are there maps that depict where contaminated soil was removed and contaminated soil remains? We could not locate documents regarding groundwater assessment and remediation. Are there maps that depict the groundwater or free product plumes delineations?

If you could confirm the information above and provide any additional clarification and documentation (specially on Parcel E) it will be greatly appreciated.
I am always available to talk, so don't hesitate to call me if you want to discuss any of this information.
Thank you,

Maria Paituvi, P.E.
Senior Engineer

Sciences
ENGINEERING
ENVIRONMENTAL
ECOLOGICAL

224 SE 9th Street
Fort Lauderdale, FL 33316
954/484-8500 Telephone
954/484-5146 Fax
305/984-9162Cell
mpaituvi@esciencesinc.com
www.esciencesinc.com
Orlando - Fort Lauderdale – Miami – DeLand

Miami-Dade County CBE, SFWMD SBE

From: Amy.Twitty@CH2M.com [mailto:Amy.Twitty@CH2M.com]
Sent: Friday, August 29, 2014 11:42 AM
To: Maria Paituvi; Nadia Locke
Cc: jbouquet@keywestcity.com
Subject: RE: Truman Waterfront Park-Soil Management Plan - Request for Documents

Also note in the 2010 DRMO SRCR Section 2 describes the final excavation to remove soil contamination from 2 to 3 feet to meet residential (not recreational) criteria.

From: Maria Paituvi [mailto:mpaituvi@esciencesinc.com]
Sent: Tuesday, August 26, 2014 9:04 PM
To: Twitty, Amy/NVR; Nadia Locke
Cc: jbouquet@keywestcity.com
Subject: RE: Truman Waterfront Park-Soil Management Plan - Request for Documents

Hello Amy,

Thank you for providing us with all the valuable information and documents for this project. At this time we have a few more specific questions that I was hoping you might be able to assist us with. The information listed below would assist us better prepare the soil management plan:

- Groundwater impacts have been documented in Building 102, 103 and 104 in Parcel E. The latest groundwater data we have located was included in Free Product Recovery Program Summary Continued Compliance Monitoring – 4th Additional Quarter (March 2005 – May 2005) Compliance Monitoring Results Trumbo Point Fuel Farm, USGC and Navy Piers and Truman Annex Building 103 prepared by CH2M HILL. This document included a figure depicting Free Product Areas but no groundwater contamination plume areas were identified. To your knowledge, is there later data available?
- The DRMO site has a lot of history. Overall it appears that only the top 2 feet of surface soil have been addressed in order to pursue the LUC for recreational use. Do you know if there are soil delineation

maps available for the soil contamination below 2 feet? The SRCR dated December 2010 includes excavation maps and extensive background information but it would help us greatly to identify the specific areas where soil impacts remain below 2 ft bls.

- Regarding Parcel K, the SRCR dated April 2014 stated that impacted surface and subsurface soil was removed from the site and the site has been addressed to Recreational standards. For this site, it would also be helpful to locate any available delineation maps for the impacts remaining on the site below the excavation depth.

We would really appreciate any help and assistance you might be able to provide. The files are both numerous and extensive so any insight you can provide to locate the above information would be greatly appreciated. The information provided above is based on our cursory review of the files available.

Please contact me with any questions or comments.

Thank you,

Maria Paituvi, P.E.
Project Engineer

ESciences ENGINEERING ENVIRONMENTAL ECOLOGICAL

224 SE 9th Street
Fort Lauderdale, FL 33316
954/484-8500 Telephone
954/484-5146 Fax
305/984-9162Cell
mpaituvi@esciencesinc.com
www.esciencesinc.com
Orlando - Fort Lauderdale – Miami – DeLand
Miami-Dade County CBE, SFWMD SBE

From: Amy.Twitty@CH2M.com [Amy.Twitty@CH2M.com]
Sent: Monday, August 25, 2014 11:59 AM
To: Maria Paituvi; Nadia Locke
Cc: jbouquet@keywestcity.com
Subject: RE: Truman Waterfront Park-Soil Management Plan - Request for Documents

Glad to hear it. Sorry for the confusion.

From: Maria Paituvi [mailto:mpaituvi@esciencesinc.com]
Sent: Monday, August 25, 2014 10:58 AM
To: Twitty, Amy/NVR; Nadia Locke
Cc: jbouquet@keywestcity.com
Subject: RE: Truman Waterfront Park-Soil Management Plan - Request for Documents

Thanks Amy,
We were able to locate and download the documents under the link provided.
Regards,

Maria Paituvi, P.E.
Project Engineer

ESciences ENGINEERING ENVIRONMENTAL ECOLOGICAL

224 SE 9th Street
Fort Lauderdale, FL 33316
954/484-8500 Telephone
954/484-5146 Fax
305/984-9162Cell
mpaituvi@esciencesinc.com
www.esciencesinc.com
Orlando - Fort Lauderdale – Miami – DeLand

Miami-Dade County CBE, SFWMD SBE

From: Amy.Twitty@CH2M.com [mailto:Amy.Twitty@CH2M.com]
Sent: Monday, August 25, 2014 10:03 AM
To: Nadia Locke
Cc: Maria Paituvi; jbouquet@keywestcity.com
Subject: RE: Truman Waterfront Park-Soil Management Plan - Request for Documents

Sorry about that. Many computer issues for me last week. Try this:

https://transfer.ch2m.com

Then find the "pub" folder and then the "KeyWestDocs" folder. I'm not sure if this full link will work but you can try it (I am an internal client so I can't test it):

https://transfer.ch2m.com/pub/KeyWestDocs

Please note this week's user ID and Password below"

Public READ ONLY Password
Username = **ext\Innovation**
Password = **osiwox77**

Last changed on **8/25/2014 12:00:06 AM**, MT

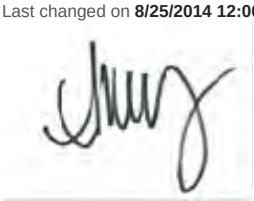

From: Nadia Locke [mailto:nlocke@esciencesinc.com]
Sent: Monday, August 25, 2014 6:09 AM
To: Twitty, Amy/NVR
Cc: Maria Paituvi
Subject: RE: Truman Waterfront Park-Soil Management Plan - Request for Documents

Hi Amy. I don't recall hearing back. Can you please send the updated link when you have a moment? Thank you!

Nadia

Nadia G. Locke, P.E., LEED AP ND
Associate

ESciences ENGINEERING ENVIRONMENTAL ECOLOGICAL

Miami-Dade County CBE, SFWMD SBE
224 SE 9th Street
Fort Lauderdale, FL 33316 MAP
954/484-8500 Telephone
954/484-5146 Fax
954/937-9678 Cell
nlocke@esciencesinc.com

www.esciencesinc.com
Orlando — Fort Lauderdale— Miami — DeLand

From: Amy.Twitty@CH2M.com [mailto:Amy.Twitty@CH2M.com]
Sent: Thursday, August 21, 2014 3:08 PM
To: jbouquet@keywestcity.com; Nadia Locke
Cc: Maria Paituvi; Justin Freedman
Subject: RE: Truman Waterfront Park-Soil Management Plan - Request for Documents

Sorry. I will send another link.

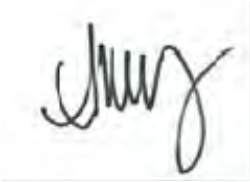

From: James Bouquet [mailto:jbouquet@keywestcity.com]
Sent: Thursday, August 21, 2014 2:06 PM
To: Nadia Locke; Twitty, Amy/NVR
Cc: Maria Paituvi; Justin Freedman
Subject: RE: Truman Waterfront Park-Soil Management Plan - Request for Documents

Me neither

From: Nadia Locke [mailto:nlocke@esciencesinc.com]
Sent: Thursday, August 21, 2014 2:41 PM
To: Amy.Twitty@CH2M.com; jbouquet@keywestcity.com
Cc: Maria Paituvi; Justin Freedman
Subject: RE: Truman Waterfront Park-Soil Management Plan - Request for Documents

Hello Amy

Please see my screenshot below. My computer is indicating that it cannot find the filepath to the public website. Can you please check and resend it? Thanks for your help!

Nadia

Nadia G. Locke, P.E., LEED AP ND
Associate

RE: Truman Waterfront Park-Soil Management Plan - Request for Documents - Message (HTML)

File | Message | Adobe PDF

Ignore | Junk | Delete | Reply | Reply All | Forward | Meeting | More | To Manager | Done | Create New | Team E-mail | Reply & Delete | Move | Rules | OneNote | Actions | Mark Unread | Categorize | Follow Up | Translate | Find | Related | Select

Delete | Respond | Quick Steps | Move | Tags | Editing

You forwarded this message on 8/20/2014 4:04 PM.

From: Amy.Twitty@CH2M.com
To: jbouquet@keywestcity.com
Cc: Nadia Locke; david.criswell@navy.mil; Tracie.Vaught@dep.state.fl.us; dcraig@keywestcity.com; RHollingworth@bermelloajamil.com
Subject: RE: Truman Waterfront Park-Soil Management Plan - Request for Documents

- 1998 Site Inspection Report for Nine BRAC Parcels
- 1999 Supplemental Site Inspection Report for BRAC Parcels
- 1999 Project Completion Report for BRAC Parcels Fast Track Soil Removals
- 2002 Decision Document for Ten BRAC Sites
- 2007 Project Completion Report for Excavation of PCB and Lead-contaminated Soil at the Former Defense Reutilization and Marketing Office

I'll continue to search and upload documents when I can. Link and this week's username and password below:

CH2M HILL Public FTPS Site

\\able\ftp\pub\KeyWestDocs

Public READ ONLY Password
Username = **ext\innovation**
Password = **agokal41**

Please note the password changes every Sunday at midnight, MT

Microsoft Outlook

Cannot find file '\\able\ftp\pub\KeyWestDocs'. Verify the path or Internet address is correct.

OK

Click on a photo to see social network updates and email messages from this person.

ESciences
ENGINEERING
ENVIRONMENTAL
ECOLOGICAL

Miami-Dade County CBE, SFWMD SBE
224 SE 9th Street
Fort Lauderdale, FL 33316 MAP
954/484-8500 Telephone
954/484-5146 Fax
954/937-9678 Cell
nlocke@esciencesinc.com

www.esciencesinc.com

From: Amy.Twitty@CH2M.com [mailto:Amy.Twitty@CH2M.com]
Sent: Monday, August 18, 2014 4:35 PM
To: jbouquet@keywestcity.com
Cc: Nadia Locke; david.criswell@navy.mil; Tracie.Vaught@dep.state.fl.us; dcraig@keywestcity.com; RHollingworth@bermelloajamil.com
Subject: RE: Truman Waterfront Park-Soil Management Plan - Request for Documents

I have placed a few reports on our public ftp site. These include:

- 1998 Site Inspection Report for Nine BRAC Parcels
- 1999 Supplemental Site Inspection Report for BRAC Parcels
- 1999 Project Completion Report for BRAC Parcels Fast Track Soil Removals
- 2002 Decision Document for Ten BRAC Sites
- 2007 Project Completion Report for Excavation of PCB and Lead-contaminated Soil at the Former Defense Reutilization and Marketing Office

I'll continue to search and upload documents when I can. Link and this week's username and password below:

CH2M HILL Public FTPS Site

\\able\ftp\pub\KeyWestDocs

Public READ ONLY Password
Username = **ext\Innovation**
Password = **agokal41**
Please note the password changes every Sunday at midnight, MT.

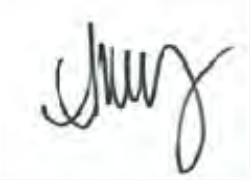

From: James Bouquet [mailto:jbouquet@keywestcity.com]
Sent: Monday, August 18, 2014 12:38 PM
To: Twitty, Amy/NVR
Cc: Nadia Locke; Criswell, David CIV NAVFAC HQ, BRAC PMO; Tracie.Vaught@dep.state.fl.us; Don Craig; Randy Hollingworth
Subject: RE: Truman Waterfront Park-Soil Management Plan - Request for Documents

Amy – cover sheets of documents sent to Nadia

From: Nadia Locke [mailto:nlocke@esciencesinc.com]
Sent: Monday, August 18, 2014 1:15 PM
To: James Bouquet
Cc: Amy.Twitty@ch2m.com; Criswell, David CIV NAVFAC HQ, BRAC PMO; Tracie.Vaught@dep.state.fl.us; Don Craig; Randy Hollingworth
Subject: RE: Truman Waterfront Park-Soil Management Plan - Request for Documents

Thank you for sending over the documents in the two emails, Jim. We only had the document named DRMO LUC Areas from Deed.pdf. The others documents are new to us. The previous document request we sent Fridays still relevant, as we do not know what documents may exist that we do not have. So, thank you for forwarding the request to Amy prior to me responding. I was in meetings.

Nadia

Nadia G. Locke, P.E., LEED AP ND
Associate

ESciences
ENGINEERING
ENVIRONMENTAL
ECOLOGICAL

Miami-Dade County CBE, SFWMD SBE
224 SE 9th Street
Fort Lauderdale, FL 33316 MAP
954/484-8500 Telephone
954/484-5146 Fax
954/937-9678 Cell
nlocke@esciencesinc.com

www.esciencesinc.com
Orlando — Fort Lauderdale— Miami — DeLand

From: James Bouquet [mailto:jbouquet@keywestcity.com]
Sent: Monday, August 18, 2014 9:22 AM
To: Nadia Locke
Cc: Amy.Twitty@ch2m.com; Criswell, David CIV NAVFAC HQ, BRAC PMO; Tracie.Vaught@dep.state.fl.us; Don Craig; Randy Hollingworth
Subject: RE: Truman Waterfront Park-Soil Management Plan - Request for Documents

2 of 2

From: James Bouquet [mailto:jbouquet@keywestcity.com]
Sent: Monday, August 18, 2014 9:20 AM
To: 'Nadia Locke'
Cc: 'Amy.Twitty@CH2M.com'; 'Criswell, David CIV NAVFAC HQ, BRAC PMO'; 'Tracie.Vaught@dep.state.fl.us'; Don Craig; 'Randy Hollingworth'
Subject: RE: Truman Waterfront Park-Soil Management Plan - Request for Documents

Nadia:

Before forwarding your request to Amy, I just want to confirm you are in receipt of the attached documents.

This is email 1 of 2

Jim

From: Nadia Locke [mailto:nlocke@esciencesinc.com]
Sent: Friday, August 15, 2014 2:34 PM
To: dcraig@keywestcity.com; jbouquet@keywestcity.com
Cc: Randy Hollingworth; Justin Freedman; Maria Paituvi
Subject: Truman Waterfront Park-Soil Management Plan - Request for Documents

Good afternoon and thank you for the opportunity to discuss the City's needs and obligations regarding the environmental and land use control issues at the Site. We are looking forward to developing the soil management plan as we understand the that it is part of the critical path for the project. We are in receipt of some items based upon what has been provided to us by the City and the information we have downloaded from regulatory databases, but our records are by no means complete. We therefore request the following information be provided to as soon as practical:

- DRMO/Parcel C-The latest information we have is the Site Rehabilitation Completion Report dated December 2010. Please provide any additional assessment reports or communications with the agencies confirming their acceptance of the recommendations, if they exist. Also, please provide us with the data of the groundwater analysis (site plan and lab reports) as soon as that is received so that we can incorporate that information into the management plan without waiting on the final report if possible.
- Parcel E-We have no documentation associated with the assessment, remediation or regulatory communication on this property. Please provide us with assessment and remediation reports documenting the soil and groundwater quality at Parcels E1, E2 and E3. Also, please provide any regulatory communications relative to these documents or that may be relevant to the project.

Thank you and we look forward to a successful project.

Nadia

Nadia G. Locke, P.E., LEED AP ND
Associate

ENGINEERING
ENVIRONMENTAL
ECOLOGICAL

Miami-Dade County CBE, SFWMD SBE
224 SE 9th Street
Fort Lauderdale, FL 33316 MAP
954/484-8500 Telephone
954/484-5146 Fax
954/937-9678 Cell
nlocke@esciencesinc.com

www.esciencesinc.com
Orlando — Fort Lauderdale— Miami — DeLand

Total Control Panel Login

To: mpaituvi@esciencesinc.com Remove this sender from my allow list

From: amy.twitty@ch2m.com

You received this message because the sender is on your allow list.

APPENDIX B

N7846-3.1 .006

0001

Department of Environmental Protection

Jeb Bush
Governor

Twin Towers Building
2600 Blair Stone Road
Tallahassee, Florida 32399-2400

David B. Struhs
Secretary

RECEIVED 8-13-01

August 7, 2001

Q A Record

Mr. Byas Glover
Code 18410
Southern Division
Naval Facilities Engineering Command
Post Office Box 190010
North Charleston, South Carolina 29419-9010

RE: Groundwater Monitoring Report, Building 189 Pipeline Site, Naval Air Station (NAS) Key West, Key West, Florida

Dear Mr. Glover:

I have completed the technical review of the Groundwater Monitoring Report and No Further Action Proposal for the Building 189 Pipeline Site, NAS Key West dated June 2001 (received by Electronic Mail June 26, 2001). Based upon my review, the enclosed Site Rehabilitation Completion Order was signed by Mr. Douglas A. Jones, Chief, Bureau of Waste Cleanup. The No Further Action Proposal was incorporated by reference in the Site Rehabilitation Completion Order.

If I can be of any further assistance with this matter, please contact me at (850) 921-9989.

Sincerely,

Joseph F. Fugitt

Joseph F. Fugitt, P.G.
Remedial Project Manager

cc: Robert Courtright, NAS Key West
Chuck Bryan, Tetra Tech NUS, Aiken, South Carolina

TJB JJC ESN ESW

Department of Environmental Protection

Jeb Bush
Governor

Twin Towers Office Building
2600 Blair Stone Road
Tallahassee, Florida 32399-2400

David B. Struhs
Secretary

August 6, 2001

CERTIFIED MAIL
RETURN RECEIPT REQUESTED

Mr. Byas Glover
Code 18410
Southern Division
Naval Facilities Engineering Command
Post Office Box 190010
North Charleston, South Carolina 29419-9010

Subject: Site Rehabilitation Completion Order
Building 189 Pipeline Site
Naval Air Station Key West
Key West, Monroe County

Dear Mr. Glover:

The Bureau of Waste Cleanup has reviewed the Groundwater Monitoring Report and No Further Action Proposal (NFAP) dated June 2001 (received June 26, 2001), submitted for the petroleum product discharge discovered at this site. Documentation submitted with the NFAP confirms that criteria set forth in Rule 62-770.680(1), Florida Administrative Code (F.A.C.), have been met. The NFAP is hereby incorporated by reference in this Site Rehabilitation Completion Order (Order). Therefore, you are released from any further obligation to conduct site rehabilitation at the site for petroleum product contamination, except as set forth below.

(1) In the event concentrations of petroleum products' contaminants of concern increase above the levels approved in this Order, or if a subsequent discharge of petroleum or petroleum product occurs at the site, the Department of Environmental Protection (Department) may require site rehabilitation to reduce concentrations of petroleum products' contaminants of concern to the levels approved in the NFAP or otherwise allowed by Chapter 62-770, F.A.C.

(2) Additionally, you are required to properly abandon all monitoring wells, except compliance wells required by Chapter 62-761, F.A.C., for release detection, within 60 days of receipt of this Order. The monitoring wells must be abandoned in accordance with the requirements of Rule 62-532.500(4), F.A.C.

Legal Issues

The Department's Order shall become final unless a timely petition for an administrative proceeding (hearing) is filed under Sections 120.569 and 120.57, Florida Statutes (F.S.), within 21 days of receipt of this Order. The procedures for petitioning for a hearing are set forth below.

Persons affected by this Order have the following options:

If you choose to accept the above decision by the Department about the No Further Action Proposal you do not have to do anything. This Order is final and effective as of the date on the top of the first page of this Order.

If you disagree with the decision, you may do one of the following:

(1) File a petition for administrative hearing with the Department's Office of General Counsel within 21 days of receipt of this Order; or

(2) File a request for an extension of time to file a petition for hearing with the Department's Office of General Counsel within 21 days of receipt of this Order. Such a request should be made if you wish to meet with the Department in an attempt to informally resolve any disputes without first filing a petition for hearing.

Please be advised that mediation of this decision pursuant to Section 120.573, F.S., is not available.

How to Request an Extension of Time to File a Petition for Hearing

For good cause shown, pursuant to Rule 62-110.106(4), F.A.C., the Department may grant a request for an extension of time to file a petition for hearing. Such a request must be filed (received) in the Department's Office of General Counsel at 3900 Commonwealth Boulevard, Mail Station 35, Tallahassee, Florida 32399-3000, within 21 days of receipt of this Order. Petitioner, if different from Southern Division of Naval Facilities Engineering Command, shall mail a copy of the request to Southern Division of Naval Facilities Engineering Command at the time of filing. Timely filing a request for an extension of time tolls the time period within which a petition for administrative hearing must be made.

How to File a Petition for Administrative Hearing

A person whose substantial interests are affected by this Order may petition for an administrative hearing under Sections 120.569 and 120.57, F.S. The petition must contain the information set forth below and must be filed (received) in the Department's Office of General Counsel at 3900 Commonwealth Boulevard, Mail Station 35, Tallahassee, Florida 32399-3000,

within 21 days of receipt of this Order. Petitioner, if different from Southern Division of Naval Facilities Engineering Command, shall mail a copy of the petition to Southern Division of Naval Facilities Engineering Command at the time of filing. Failure to file a petition within this time period shall waive the right of anyone who may request an administrative hearing under Sections 120.569 and 120.57, F.S.

Pursuant to Section 120.54(5)(b)4.a., F.S. (1998, Supp.), and Rule 28-106.201, F.A.C., a petition for administrative hearing shall contain the following information:

(a) The name, address, and telephone number of each petitioner, the name, address, and telephone number of the petitioner's representative, if any, the site owner's name and address, if different from the petitioner, the FDEP facility number, and the name and address of the facility;
(b) A statement of how and when each petitioner received notice of the Department's action or proposed action;
(c) An explanation of how each petitioner's substantial interests are or will be affected by the Department's action or proposed action;
(d) A statement of the material facts disputed by the petitioner, or a statement that there are no disputed facts;
(e) A statement of the ultimate facts alleged, including a statement of the specific facts the petitioner contends warrant reversal or modification of the Department's action or proposed action;
(f) A statement of the specific rules or statutes the petitioner contends require reversal or modification of the Department's action or proposed action; and
(g) A statement of the relief sought by the petitioner, stating precisely the action petitioner wishes the Department to take with respect to the Department's action or proposed action.

This Order is final and effective as of the date on the top of the first page of this Order. Timely filing a petition for administrative hearing postpones the date this Order takes effect until the Department issues either a final order pursuant to an administrative hearing or an order responding to supplemental information provided pursuant to meetings with the Department.

Judicial Review

Any party to this Order has the right to seek judicial review of it under Section 120.68, F.S., by filing a notice of appeal under Rule 9.110 of the Florida Rules of Appellate Procedure with the clerk of the Department in the Office of General Counsel, 3900 Commonwealth Boulevard, Mail Station 35, Tallahassee, Florida 32399-3000, and by filing a copy of the notice of appeal accompanied by the applicable filing fees with the appropriate district court of appeal. The notice of appeal must be filed within 30 days after this Order is filed with the clerk of the Department (see below).

Questions

Any questions regarding the Department's review of your No Further Action Proposal should be directed to Joseph F. Fugitt, P.G. at (850) 921-9989. Questions regarding legal issues should be referred to the Department's Office of General Counsel at (850) 488-9314. Contact with any of the above does not constitute a petition for administrative hearing or request for an extension of time to file a petition for administrative hearing.

Sincerely,

Douglas A. Jones, Chief
Bureau of Waste Cleanup
Division of Waste Management

DAJ/jff

cc: Robert Courtright, NAS Key West, Environmental Department, Post Office Box 9007, Key West, Florida 33040-9007
Chuck Bryan, Tetra Tech NUS, 900 Trail Ridge Road, Aiken, South Carolina, 29803
File

FILING AND ACKNOWLEDGMENT
FILED, on this date, pursuant to
§120.52 Florida Statutes, with the
designated Department Clerk, receipt
of which is hereby acknowledged.

Clerk (or Deputy Clerk) — Date 8/6/01

Mr. Byas Glover
Building 189 Pipeline Site NAS Key West

P.G. CERTIFICATION

Groundwater Monitoring Report/NFAP for Building 189 Pipeline Site

I hereby certify that in my professional judgement, the components of this Groundwater Monitoring Report and No Further Action Proposal for the Building 189 Pipeline Site at Naval Air Station Key West, Key West, Florida, satisfy the requirements set forth in Chapter 62-770, F.A.C., and that the geological interpretations in this report provide reasonable assurances of achieving the Assessment objectives stated in Chapter 62-770, F.A.C.

____ I personally completed this review.

✓ This review was conducted by Joseph F. Fugitt, P.G. working under my supervision.

James H. Cason, P.G.
Professional Geologist
Technical Review Section

August 1, 2001
Date

APPENDIX C

REVISIONS				
LET	DESCRIPTION	PREP'D BY	DATE	APPROVED

MISENER MARINE CONSTRUCTION, INC.

"It is hereby certified that the material/equipment shown and marked in this submittal, shop drawing, catalog cut(s), etc., to be incorporated with Contract Number N62467-85-C-0141 is in compliance with the contract drawings and specifications, can be installed in the allocated spaces, is approved for use, and is (submitted for Government approval) (submitted to Government for record purposes)."

Authorized Reviewer _____ Date _____

Signature CQC Rep. [signature] Date 10-25-86

AS-BUILTS

TRUMAN ANNEX

NAVAL AIR STATION KEY WEST, FLORIDA

P H M BERTHING WHARF

CONSTRUCTION CONTRACT NO. N62467-85-C-0141

SPECIFICATION NO. 06-85-0141

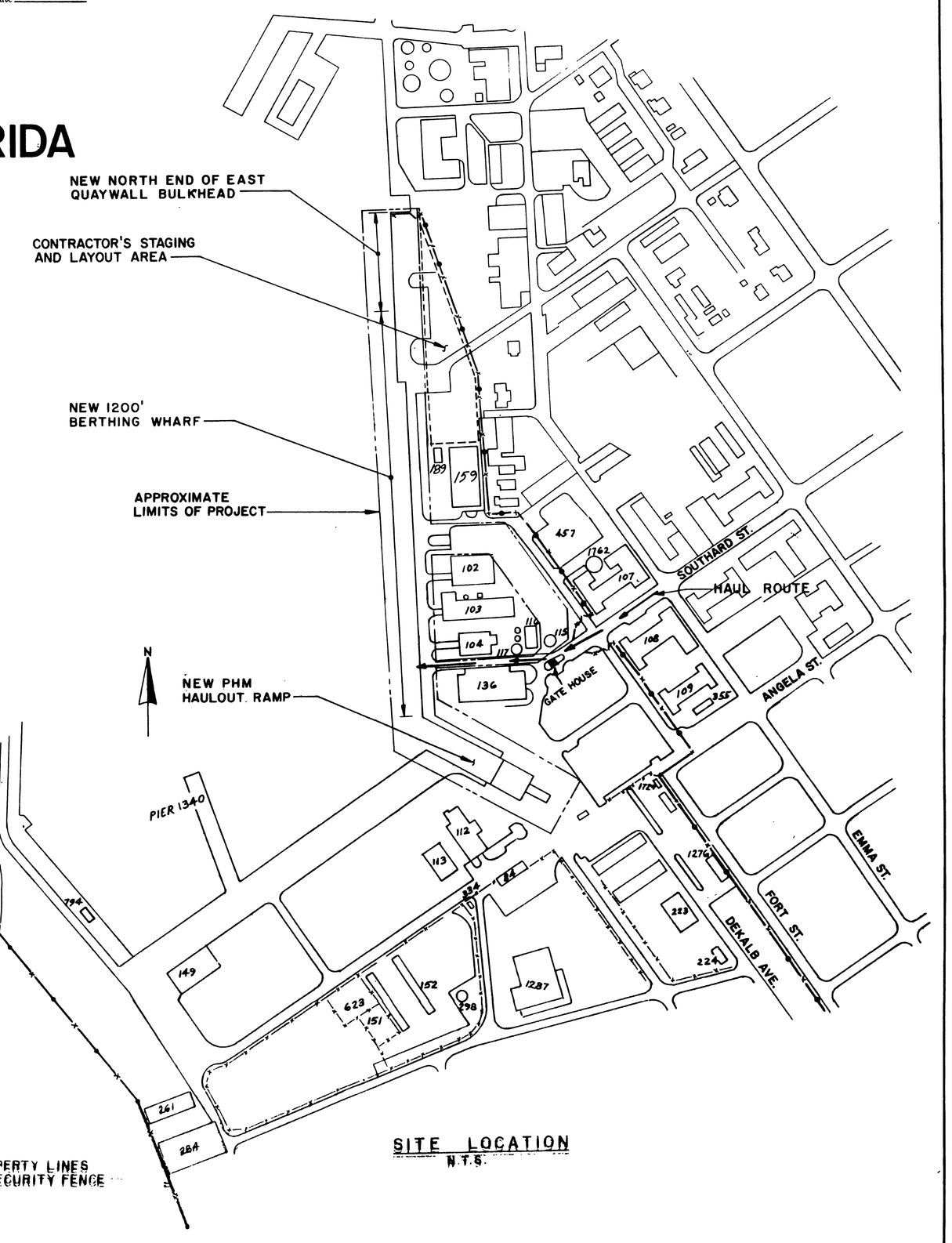

SITE LOCATION
N.T.S.

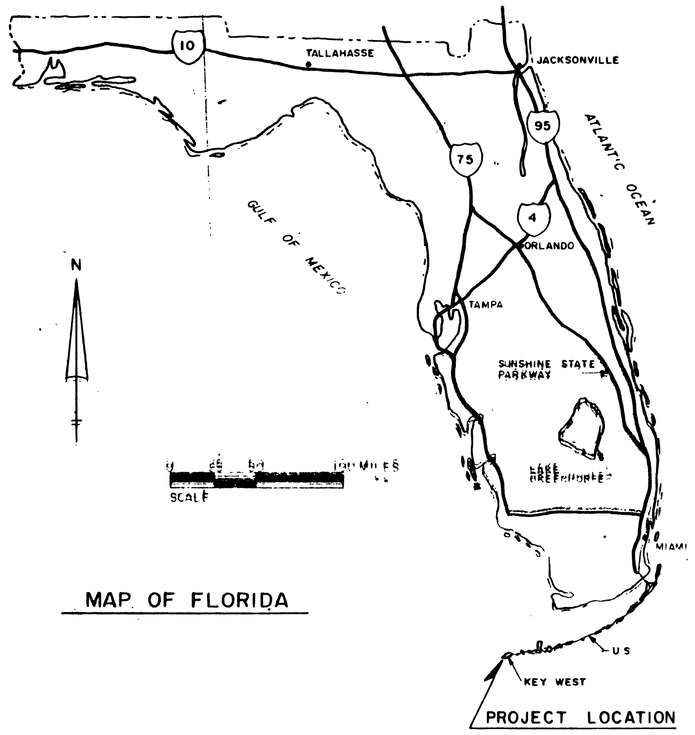

MAP OF FLORIDA

PROJECT LOCATION

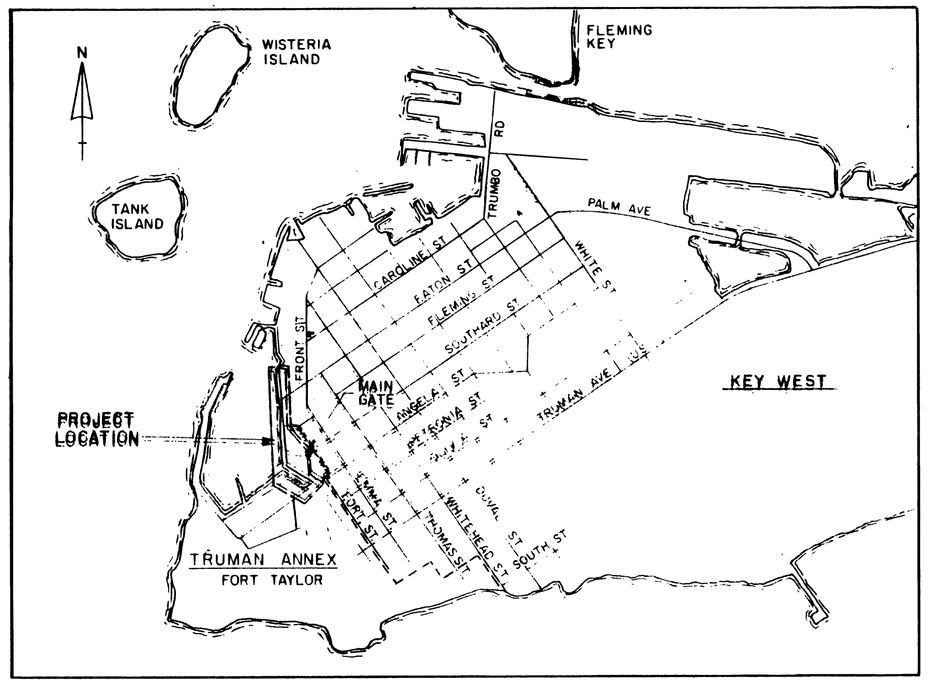

VICINITY MAP

1 1/2 0 1 MILE
SCALE

FOR OFFICAL USE ONLY

Greiner Engineering Sciences, Inc. CONSULTING ENGINEERS TAMPA, FLORIDA	DEPARTMENT OF THE NAVY NAVAL FACILITIES ENGINEERING COMMAND SOUTHERN DIVISION CHARLESTON, S.C.	
DSGN ZICHLIN/ZICHLIN CHK EVANS	NAVAL AIR STATION	KEY WEST, FLA.
SUPV WALKER CH ENGR WRIGHTELLO	PHM BERTHING WHARF	
SUBMITTED [signature] DATE 10/20/86	TRUMAN ANNEX	
FIELD ENGR	SITE LOCATION & VICINITY MAP	
EIC [signature] FOR HEAD		
FPO [signature] DIR		
APPROVED [signature] DATE 10/20/86	SIZE F	CODE IDENT NO. 80091
OFFICER IN CHARGE		NAVFAC DRAWING NO. 5157631
APPROVED [signature] DATE 5/19/86		CONSTR CONTR NO. N62467-85-C-0141
SPS FOR COMMDR, NAVFAC	SCALE NOTED	SPEC 06-85-0141 SHEET 1 OF 12

ARCH. OFFICER SEAL

C-1

L E G E N D

105 ℄	SURVEY CONTROL BASE LINE
—•—x—•—x—•—x—•—	NAVY PROPERTY BOUNDARY LINE AND SECURITY FENCE
➡	MAIN STATION ENTRANCE
═══	ROAD OR STREET

EXISTING	NEW	
◉	● SAN M.H	SANITARY SEWER MANHOLE
○	● S.M.H	STORM SEWER MANHOLE
▭ C.B	■ C B	CATCH BASIN
E	● E.M.H	ELECTRICAL MANHOLE
C	● C M H	COMMUNICATIONS MANHOLE
---o---	●———	POWER POLE
♀	♀	STREET LIGHTING
	—D—●—D—	FLOOD LIGHTING
	F.A	PEDESTAL FIRE ALARM SYSTEM
---⋈---	⋈	GATE VALVE
	⋈	BALL VALVE
	⋈	PLUG VALVE
	⋈	FLOW CONTROL VALVE
	Y	EQUIPMENT DRAIN FUNNEL OILY WATER SEWER
	(S)	STRAINER BASKET
	(M)	FLOW METER
		CENTRIFUGAL PUMP
	(PI)	PRESSURE GAGE
	(FCV)	FLOW CONTROL VALVE
	(PS)	PRESSURE SWITCH
	S.O	SLIP-ON FLANGE
	W N	WELDING NECK FLANGE
	B.O P	BOTTOM OF PIPE
	S W.	SOCKET WELD
V	V	VALVE BOX
		CHECK VALVE
(M)	(M)	METER
6" ▷ 4"	6" ▷ 4"	REDUCER
S	S	STORM SEWERS
SAN.	SAN.	SANITARY SEWER (FORCE MAIN)
SAN. G.M.	SAN G.M.	SANITARY SEWER (GRAVITY)
W	W	POTABLE WATER LINE
	SAL W	SALT WATER LINE
T	T	TELEPHONE CONDUIT
D.O.L	D.O.L	DIESEL OIL LINE
	O.W.	OILY WASTE LINE
B.W.	B.W	BILGE WATER LINE
C.O.	C.O.	CLEAN OUT
E	E	ELECTRICAL DUCT BANK
C	C	COMMUNICATIONS DUCT BANK
▭	▭ (C)	MOORING CLEATS
	I (L)	LADDER
	▭ (B)	DOUBLE BITTS
⊙		BOLLARD
	E	ELECTRICAL CONDUIT
7.95	(7.95)	ELEVATIONS
		CONCRETE
		GRADED AGGREGATE BASE FILL
		EXISTING GROUND
	F.R.P.	FIBERGLASS REINFORCED PIPE
	P.V.C	POLYVINYL CHORIDE
	C.I.P.	CAST IRON PIPE
	D.I.P.	DUCTILE IRON PIPE
	S.S.	STAINLESS STEEL
	U.G.	UNDERGROUND
	O.H.	OVERHEAD
	C.M.P.	CORRUGATED METAL PIPE

EXISTING	NEW	
	□ T.P.	TELEPHONE EQUIPMENT PAD
	▨	ELECTRIC DISTRIBUTION PANEL
	⊠	ELECTRIC MOTOR CONTROLLER
	● (TS)	TEST STATION (CATHODIC PROTECTION)
	INV.	INVERT OF PIPE
	R.C.P.	REINFORCED CONCRETE PIPE
	D.O.L.	DIESEL OIL LINE
	△	THRUST BLOCK

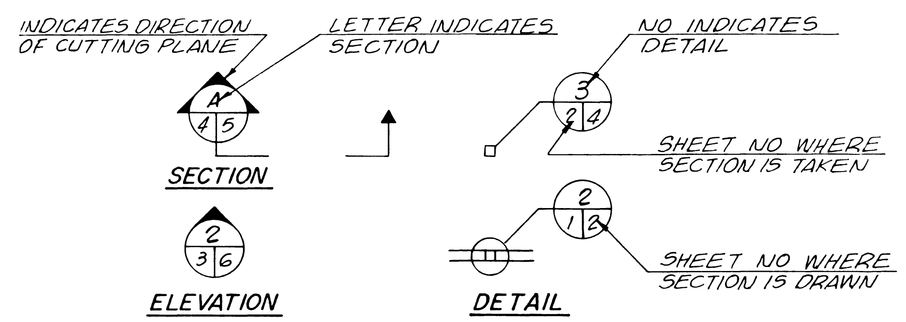

ELEVATION — SECTION — LEGEND

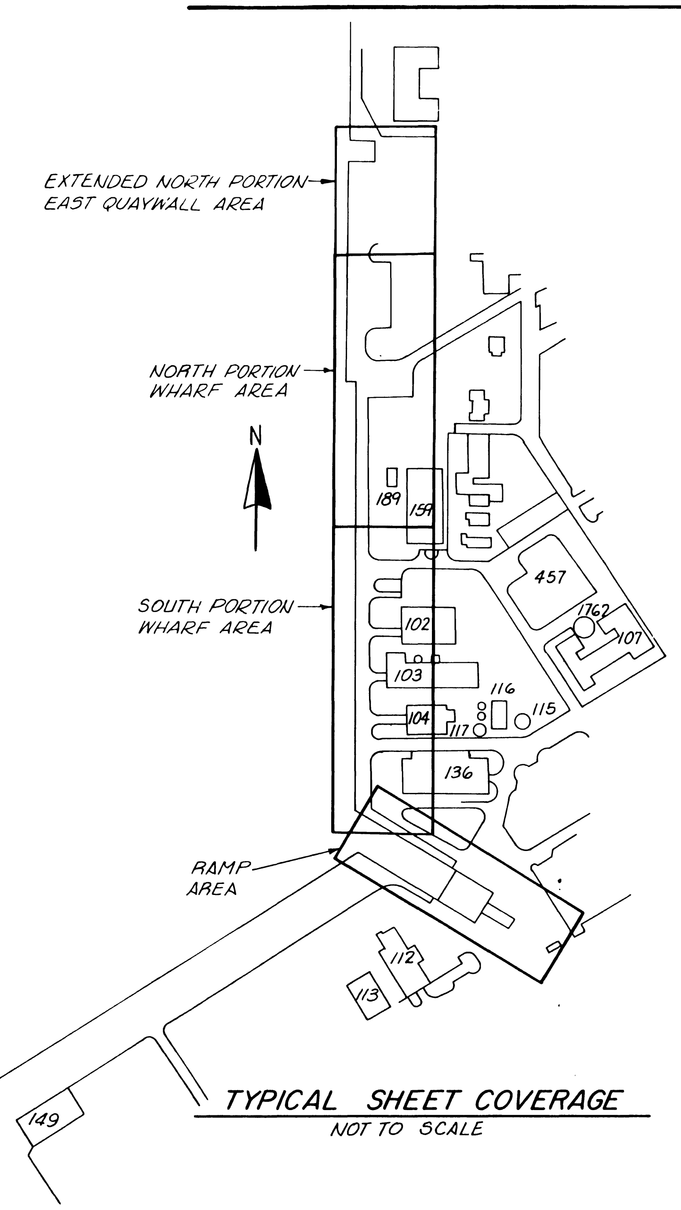

TYPICAL SHEET COVERAGE
NOT TO SCALE

INDEX OF DRAWINGS

NAVFAC DWG. NO.	SHEET NUMBER	TITLE
5157631	C-1	SITE LOCATION & VICINITY MAP
5157632	C-2	LEGEND AND INDEX
5157633	C-3	GENERAL NOTES
5157634	C-4	DEMOLITION PLAN AND PROFILE - RAMP
5157635	C-5	DEMOLITION AND DREDGING - SOUTH
5157636	C-6	DEMOLITION AND DREDGING - NORTH
5157637	C-7	WHARF AREA DEMOLITION LEGEND
5157638	C-8	DEMOLITION SECTIONS AND DETAILS - RAMP
5157639	C-9	DEMOLITION SECTIONS AND DETAILS
5157640	C-10	DEMOLITION OF DIESEL OIL STORAGE TANK NO. 115
5157641	C-11	TRAVERSE MAP
5157642	C-12	NEW PHM RAMP
5157643	C-13	CIVIL SITE PLAN - SOUTH
5157644	C-14	CIVIL SITE PLAN - NORTH
5157645	C-15	CIVIL SITE PLAN - EAST
5157646	C-16	SECTIONS AND DETAILS - RAMP
5157647	C-17	SECTIONS AND DETAILS - RAMP
5157648	C-18	SECTIONS AND DETAILS
5157649	C-19	SECTIONS AND DETAILS
5157650	C-20	SECTIONS AND DETAILS - STORM
5157651	C-21	MOVABLE SECURITY BARRIER
5157652	C-22	BORING LOCATIONS AND TEST PITS
5157653	C-23	BORING LOGS
5157654	C-24	TEST PITS
5157655	M-1	UTILITY PLAN - SOUTH WHARF
5157656	M-2	UTILITY PLAN - NORTH WHARF
5157657	M-3	UTILITY PROFILES
5157658	M-4	UTILITY STATION DETAILS
5157659	M-5	SALT WATER WELLS/OIL SEPARATOR DETAILS
5157660	M-6	UTILITY DETAILS
5157661	M-7	UTILITY DETAILS
5157662	M-8	UTILITY DETAILS
5157663	F-1	FUEL OIL DISTRIBUTION SYSTEM
5157664	F-2	FLOW DIAGRAM
5157665	F-3	FOUNDATION LOCATION PLAN
5157666	F-4	FUEL FARM PLAN
5157667	F-5	FUEL FARM SECTIONS
5157668	F-6	MAINTENANCE PLATFORM DETAILS
5157669	F-7	STORAGE TANK AND DIKE DETAILS
5157670	F-8	FOUNDATION AND PIPE SUPPORT DETAILS
5157671	F-9	FUEL LINES PLAN AND SECTIONS
5157672	F-10	PIPING RELOCATION AND CATHODIC PROTECTION-SOUTH
5157673	F-11	PIPING RELOCATION AND CATHODIC PROTECTION-NORTH
5157674	F-12	CATHODIC PROTECTION DETAILS
5159536	F-13	PARTIAL FUEL FARM PLAN
5157675	E-1	ELECTRICAL SITE PLAN & ONE LINE DIAGRAM - RAMP
5157676	E-2	ELECTRICAL DETAILS - RAMP
5157677	E-3	ELECTRICAL ONE LINE DIAGRAM - WHARF
5157678	E-4	ELECTRICAL SITE PLAN - SOUTH WHARF
5157679	E-5	ELECTRICAL SITE PLAN - NORTH WHARF
5157680	E-6	ELECTRICAL SITE PLAN - FUEL FARM
5157681	E-7	ELECTRICAL SUBSTATION LAYOUT - WHARF
5157682	E-8	ELECTRICAL DETAILS - WHARF
5157683	E-9	ELECTRICAL PLANS AND DETAILS
5157684	E-10	AREA LIGHTING - WHARF
5157685	E-11	SALT WATER PUMPING STATION CONTROLS
5157686	E-12	FUEL FARM PUMPING STATION CONTROLS
5159537	E-13	PAD MOUNTED SWITCHGEAR ONE-LINE AND LAYOUT

NAVFAC DWG. NO.	SHEET NUMBER	TITLE
5157687	S-1	STRUCTURAL SITE PLAN - SOUTH
5157688	S-2	STRUCTURAL SITE PLAN - NORTH
5157689	S-3	SECTIONS AND DETAILS
5157690	S-4	SECTIONS AND DETAILS
5157691	S-5	SECTIONS AND DETAILS
5157692	S-6	SECTIONS AND DETAILS
5157693	S-7	SECTIONS AND DETAILS - RAMP
5157694	S-8	PHM RAMP WALLS
5157695	S-9	SECTIONS - RAMP
5157696	S-10	SECTIONS AND DETAILS - RAMP
5157697	S-11	RAMP UTILITY STATION ENCLOSURE
5157698	S-12	BERTHING AND TIE-DOWN LOCATIONS
5157699	S-13	FENDERS, MOORING HARDWARE AND LADDERS
5157700	S-14	SECTIONS AND DETAILS
5157701	S-15	M. G. HOUSE
5157702	S-16	BERTHING PLAN
5159538	S-17	SECTIONS AND DETAILS
5157703	T-1	CAMEL GENERAL NOTES
5157704	T-2	CAMEL ASSEMBLY ARRANGEMENT
5157705	T-3	CAMEL ASSEMBLY ARRANGEMENT
5157706	T-4	CAMEL INTERMEDIATE SECTION
5157707	T-5	CAMEL INTERMEDIATE SECTION
5157708	T-6	CAMEL INTERMEDIATE SECTION
5157709	T-7	CAMEL INTERMEDIATE SECTION
5157710	T-8	CAMEL INTERMEDIATE SECTION
5157711	T-9	CAMEL INTERMEDIATE SECTION
5162757	WC-1	DEMOLITION AND DREDGING-EXTENDED NORTH
5162758	WC-2	DEMOLITION-DETAILS AND SECTIONS
5162759	WC-3	DEMOLITION-SECTIONS AND DETAILS
5162760	WC-4	CIVIL SITE PLAN-EXTENDED NORTH
5162761	WC-5	SECTIONS AND DETAILS
5162762	WS-1	STRUCTURAL SITE PLAN-EXTENDED NORTH
5162763	WS-2	SECTIONS AND DETAILS
5162764	WS-3	SECTIONS AND DETAILS

REVISIONS

LET	DESCRIPTION	PREP'D BY	DATE	APPROVED

FOR OFFICIAL USE ONLY

Robert K. Walk
2-26-88
ARCH & ENGR SEAL

C-2

Greiner Engineering Sciences, Inc
CONSULTING ENGINEERS TAMPA, FLORIDA

DSGN ZICHLINSKI CHK EVANS
SUP WALKER CH ENGR MILITELLO
SUBMITTED BY Robert K. Walk AVP DATE 2-26-88
FIRM MANAGER/ATTLET
EIC E.H. Stuhmuller ASM HO
FPE DIR

APPROVED DATE
OFFICER IN CHARGE
APPROVED Arthur P.E. DATE 3/15/88
END FOR COMMANDER NAVFAC

DEPARTMENT OF THE NAVY NAVAL FACILITIES ENGINEERING COMMAND
SOUTHERN DIVISION
CHARLESTON S C

NAVAL AIR STATION KEY WEST, FLA.

PHM BERTHING WHARF
TRUMAN ANNEX
LEGEND AND INDEX

SIZE	CODE IDENT NO	NAVFAC DRAWING NO
F	80091	5157632
		CONSTR CONTR NO N62467-85-C-0141
SCALE AS NOTED	SPEC 06-85-0141	SHEET 2 OF

REVISIONS				
LET	DESCRIPTION	PREP'D BY	DATE	APPROVED

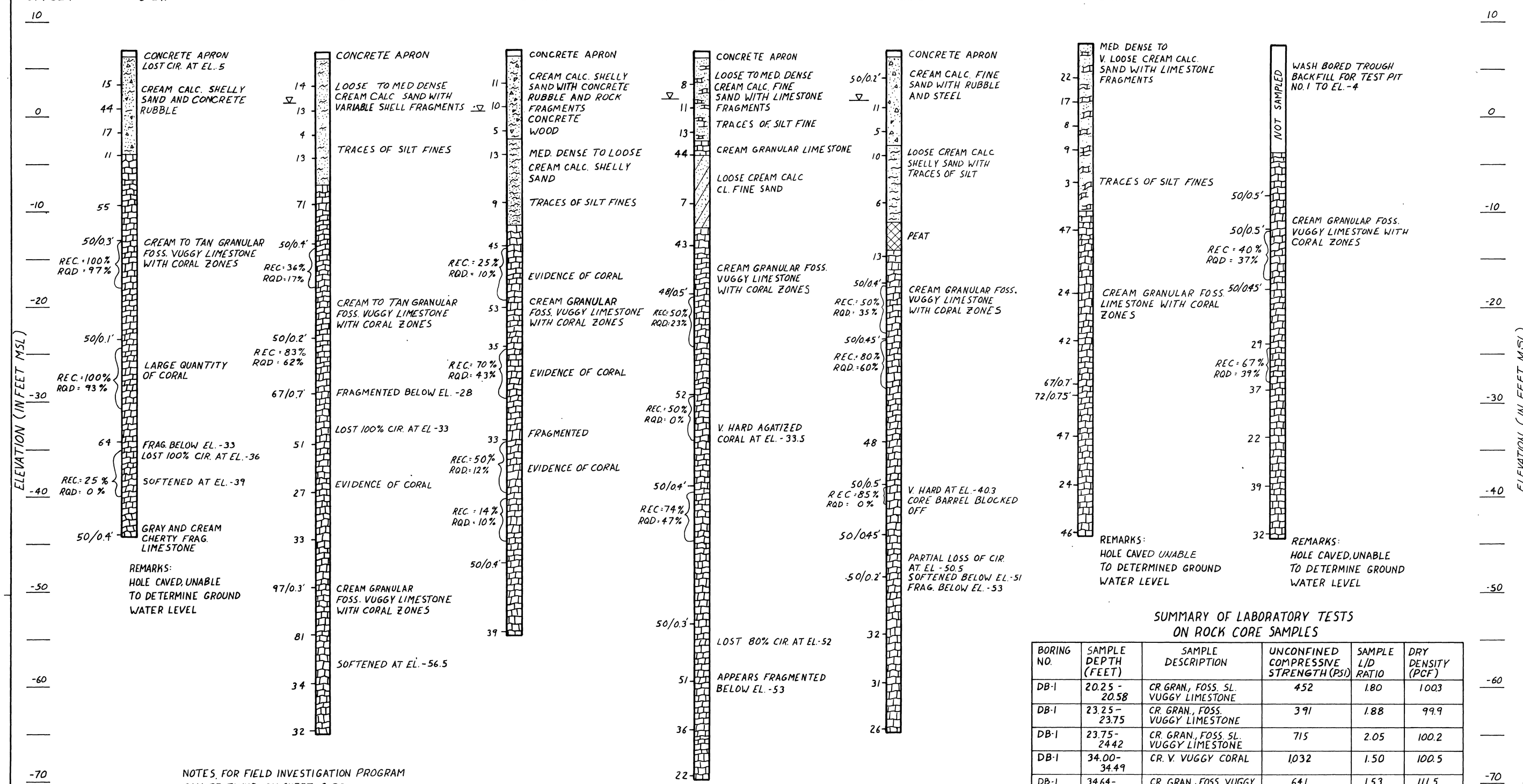

NOTES FOR FIELD INVESTIGATION PROGRAM CAN BE FOUND ON SHEET C-22

BORING LOGS

SCALE: 1" = 5'-0" VERTICAL

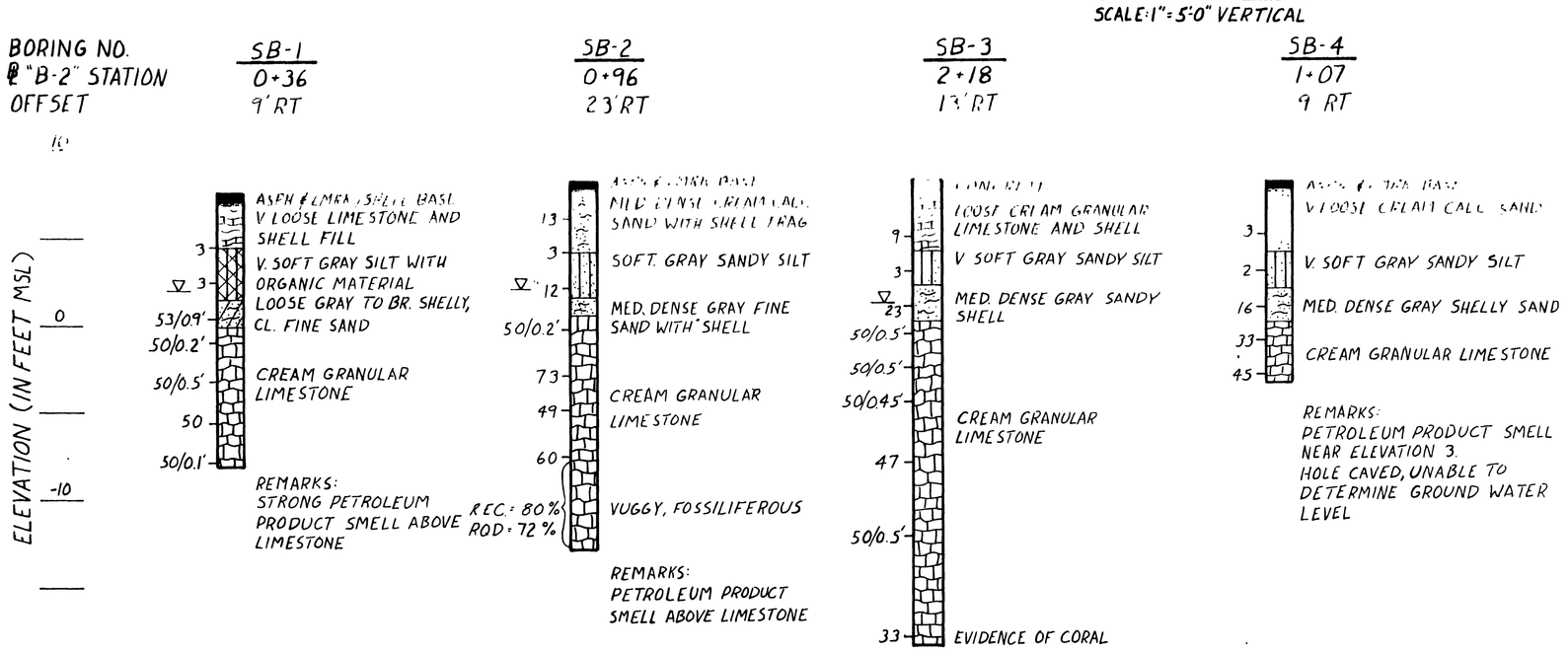

BORING LOGS

SCALE: 1" = 5'-0" VERTICAL

LEGEND FOR BORING LOGS

- CONCRETE
- LIMESTONE
- SANDY SILT (ML)
- ORGANIC MATERIAL (Pt)
- SHELL
- LIMESTONE AND SHELL
- ASPHALT AND BASE
- SAND (SW-SM TO SM)
- CLAYEY SAND (SW-SC TO SC)
- SAND WITH LIMESTONE FRAGMENTS (SW-SM TO SM WITH LIMESTONE)
- SAND WITH RUBBLE (SW-SM TO SM WITH RUBBLE)

UNIFIED SOIL CLASSIFICATION (TYPICAL)

ABBREVIATIONS

LMRK.	LIMEROCK
ASPH.	ASPHALT
FOSS.	FOSSILIFEROUS
CL.	CLAYEY
CIR.	CIRCULATION
FRAG.	FRAGMENTED
CALC.	CALCAREOUS
EL.	ELEVATION
V.	VERY
MED.	MEDIUM
BR.	BROWN
REC.	RECOVERY
RQD.	ROCK QUALITY DESIGNATION
S.P.T.	STANDARD PENETRATION TEST
SL.	SLIGHTLY
TR.	TRACES
CR.	CREAM
GRAN.	GRANULAR
L.S.	LIMESTONE

LOCATION OF GROUND WATER IN TEST HOLE

S.P.T. BLOWCOUNTS FOR 12 INCHES OF PENETRATION — 36

S.P.T. BLOWCOUNTS FOR PENETRATION INTERVAL INDICATED — 64/0.7'

INTERVAL OF 4" DIAMETER ROCK CORING

BORING NO.	PAVEMENT TYPE AND THICKNESS
SB-1	0.1' ASPHALT, 0.6' LIMEROCK
SB-2	0.13' ASPHALT, 0.47' LIMEROCK
SB-3	0.4' CONCRETE
SB-4	0.13' ASPHALT, 0.27' LIMEROCK
DB-1	0.6' CONCRETE
DB-2	0.65' CONCRETE
DB-3	0.6' CONCRETE
DB-4	0.85' CONCRETE
DB-5	0.6' CONCRETE
DB-6	BROKEN ASPHALT PAVEMENT
DB-7	0.6' CONCRETE

SUMMARY OF LABORATORY TESTS ON ROCK CORE SAMPLES

BORING NO.	SAMPLE DEPTH (FEET)	SAMPLE DESCRIPTION	UNCONFINED COMPRESSIVE STRENGTH (PSI)	SAMPLE L/D RATIO	DRY DENSITY (PCF)
DB-1	20.25 - 20.58	CR. GRAN., FOSS. SL. VUGGY LIMESTONE	452	1.80	100.3
DB-1	23.25 - 23.75	CR. GRAN., FOSS. VUGGY LIMESTONE	391	1.88	99.9
DB-1	23.75 - 24.42	CR. GRAN., FOSS. SL. VUGGY LIMESTONE	715	2.05	100.2
DB-1	34.00 - 34.49	CR. V. VUGGY CORAL	1,032	1.50	100.5
DB-1	34.64 - 35.13	CR. GRAN., FOSS. VUGGY LIMESTONE, TR. OF CORAL	641	1.53	111.5
DB-2	30.15 - 30.85	CR. SL. VUGGY CORAL	1,333	2.12	120.5
DB-3	32.00 - 32.45	CR GRAN, FOSS V. VUGGY LIMESTONE	397	1.46	90.8
DB-4	26.65 - 27.05	CR. GRAN., V. SL. VUGGY LIMESTONE	502	1.32	100.4
DB-4	46.60 - 47.15	CR. GRAN., FOSS. V. VUGGY LIMESTONE	271	1.70	94.5
DB-5	25.10 - 25.56	CR. GRAN., FOSS. VUGGY LIMESTONE	151	1.40	103.7
DB-5	32.65 - 33.09	CR. SL. VUGGY CORAL	383	1.39	102.1
DB-7	21.00 - 21.45	CR. GRAN., FOSS. V. SL. VUGGY LIMESTONE	668	1.37	103.1
SB-2	17.85 - 18.42	CR GRAN, FOSS	283	1.78	94.4

DRY DENSITIES WERE OBTAINED BY CALCULATING THE GROSS VOLUME OF THE CORE BASED ON THE LENGTH OF THE CORE AND AVERAGE OUTSIDE DIAMETER.

SUMMARY OF PULLOUT TEST RESULTS

TEST LOCATION	DEPTH TO BOTTOM OF PLUG (FEET)	TEST PLUG LENGTH (FEET)	FAILURE LOAD (TONS)
DB-2	25.0	3.5	27.5
DB-3	25.0	2.9	56.0
DB-4	37.0	3.3	60.0
DB-5	24.0	3.0	70.0

NOTE:
NO TEST PLUGS WERE RECOVERED.
THE 4" DIAMETER CORE BARREL USED CORES A NOMINAL 6" DIAMETER HOLE. TEST PLUG DIAMETERS ≥ 6".

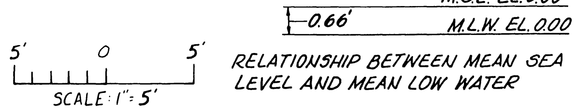

RELATIONSHIP BETWEEN MEAN SEA LEVEL AND MEAN LOW WATER

FOR OFFICIAL USE ONLY

Greiner Engineering Sciences, Inc.
CONSULTING ENGINEERS TAMPA, FLORIDA

DEPARTMENT OF THE NAVY — NAVAL FACILITIES ENGINEERING COMMAND
SOUTHERN DIVISION
CHARLESTON, S.C.

NAVAL AIR STATION — KEY WEST, FLA.

PHM BERTHING WHARF
TRUMAN ANNEX
BORING LOGS

DSGN EVANS DR ROGERS CHK WALKER
SUPV WALKER CH ENGR MILITELLO
SUBMITTED BY: S. Militello EVP 6/20/86
FIRM MEMBER (TITLE)
EC J.H. Stanyon BRHD
PPE OH

APPROVED DATE
OFFICER IN CHARGE
APPROVED Alley PE 6/11/86
FOR COMMANDER NAVFAC

Sam Militello 6/20/86
ARCH & ENGR SEAL

C-23

SIZE	CODE IDENT NO	NAVFAC DRAWING NO
F	80091	5157653
SCALE AS NOTED		CONSTR CONTR NO N62467-85-C-0141
		SPEC 06-85-0141 SHEET 23 OF

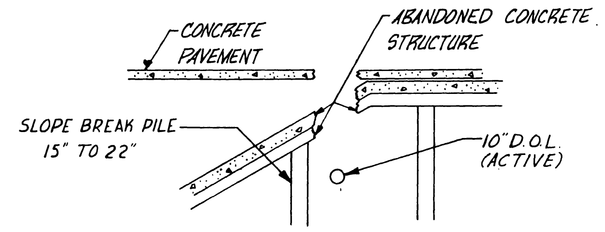

TYPICAL SECTION
NOT TO SCALE

BORING NO.	SAMPLE DEPTH	DESCRIPTION	PERCENT FINER BY WEIGHT						
			3/4"	NO. 4	NO. 10	NO. 20	NO. 40	NO. 100	NO. 200
SB-1	4.0'-5.5'	GRAY SANDY SILT	100	99	97	89	81	63	53
SB-3	6.0'-7.5'	GRAY SILTY, SHELLY SAND	100	99	95	89	77	31	22
SB-3	2.0'-3.5'	CR. GRAN. L.S. AND SHELL	93	82	74	62	40	21	19
DB-1	2.0'-3.5'	CR. CALC. SILTY SHELLY SAND	100	93	87	82	73	39	22
DB-2	7.5'-9.0'	CR. CALC. SILTY FINE SAND W/SHELL	91	76	69	63	54	28	18
DB-3	5.0'-6.5'	CR. CALC. SHELLY SAND	94	83	75	66	54	20	11
DB-3	7.5'-9.0	CR. CALC. SILTY SHELLY SAND	100	76	67	61	53	29	19
DB-4	15.0'-16.5'	CR. CALC. CL. SAND	100	97	89	77	69	46	38
DB-5	10.0'-11.5'	CR. CALC. SHELLY SAND W/TR. OF SILT	92	83	76	67	55	20	11
DB-6	2.0'-3.5'	CR. CALC. SAND W/L.S. FRAGMENTS	78	47	38	30	24	14	11

U.S. STANDARD SIEVE SIZES

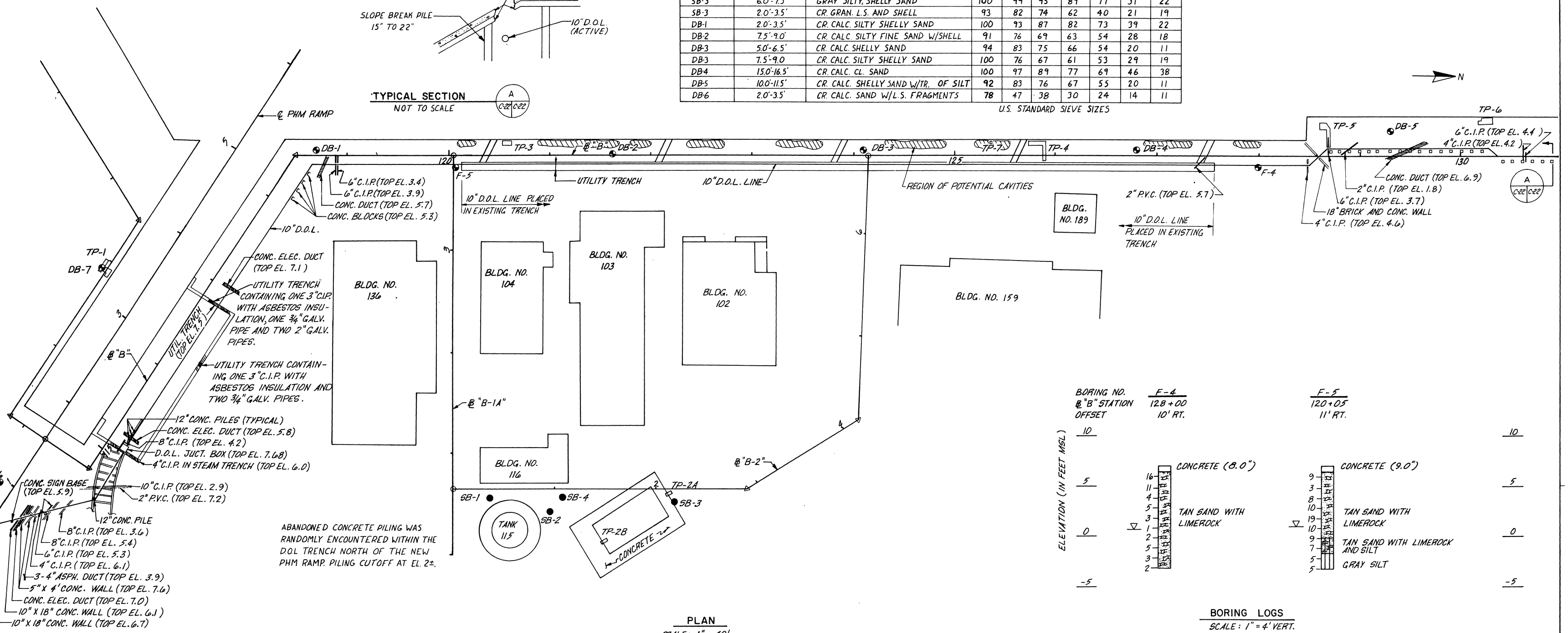

ABANDONED CONCRETE PILING WAS RANDOMLY ENCOUNTERED WITHIN THE D.O.L TRENCH NORTH OF THE NEW PHM RAMP. PILING CUTOFF AT EL. 2±.

PLAN
SCALE: 1" = 40'

BORING LOGS
SCALE: 1" = 4' VERT.

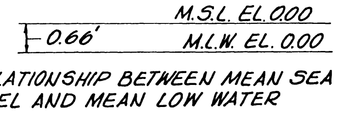

RELATIONSHIP BETWEEN MEAN SEA LEVEL AND MEAN LOW WATER

NOTES

1. "F" BORINGS WERE DRILLED BY FLORIDA TESTING AND ENGINEERING CO. OF FT. LAUDERDALE, FLORIDA DURING OCTOBER 1983. ALL OTHER BORINGS WERE DRILLED BY DRIGGERS ENGINEERING SERVICES, INC. OF CLEARWATER, FLORIDA DURING JULY AND AUGUST OF 1985.
2. BORINGS WERE STANDARD PENETRATION TEST (S.P.T.) BORINGS IN GENERAL ACCORDANCE WITH ASTM D 1586.
   SPOON SAMPLER = 1 3/8" INSIDE DIA., 2" OUTSIDE DIA.
   HAMMER WEIGHT = 140 POUNDS
   AVERAGE HAMMER DROP = 30".
3. NUMBERS TO LEFT OF BORING LOGS INDICATE S.P.T. BLOW COUNT FOR 12 INCH (UNLESS NOTED OTHERWISE) SPLIT SPOON PENETRATION.
4. FOUR INCH DIA. ROCK CORING WAS PERFORMED AT SELECTED LOCATIONS IN DB BORINGS. RECOVERY (CUMULATIVE LENGTH OF MATERIAL RECOVERED, EXPRESSED AS A PERCENT OF TOTAL CORE LENGTH) AND ROCK QUALITY DESIGNATION (CUMULATIVE LENGTH OF RECOVERED INTACT PIECES 4 INCHES AND LONGER, EXPRESSED AS A PERCENT OF TOTAL CORE LENGTH) FOR EACH CORE IS INDICATED ON THE CORRESPONDING BORING. THE ABBREVIATIONS "REC" AND "R & D" ARE USED.
5. THE BORING LOGS SHOWN ARE FOR THE CONTRACTOR'S GENERAL INFORMATION ONLY AND REPRESENT SUBSURFACE CONDITIONS ENCOUNTERED WITHIN THE TEST HOLE AT THE TIME OF TESTING.
6. LABORATORY TESTING ON SELECTED SAMPLES INCLUDED GRAIN SIZE ANALYSES, UNCONFINED COMPRESSION TEST, AND ROCK CORE DENSITY. RESULTS ARE PRESENTED IN TABULAR FORM ON THIS SHEET AND ON SHEET C-23.
7. PULLOUT TESTS WERE CONDUCTED AT SELECTED LOCATIONS IN DB BORINGS TO EVALUATE ROCK ULTIMATE FRICTIONAL STRENGTH. THIS WAS ACCOMPLISHED BY INSTALLING A REINFORCED GROUT PLUG AT A CHOSEN SMALL DEPTH INTERVAL IN A BOREHOLT AND JACKING THE PLUG UNTIL FAILURE OCCURRED. PULLOUT TEST RESULTS ARE PRESENTED IN TABULAR FORM ON SHEET C-23.
8. TEST PITS WERE EXCAVATED BY WILLIAM G STEVENS, INC. OF KEY WEST FLORIDA DURING JULY AND AUGUST OF 1985.
9. THE TEST PIT DETAILS SHOWN HEREIN ARE PROVIDED FOR THE CONTRACTOR'S GENERAL INFORMATION. THE CONTRACTOR SHALL ANTICIPATE THAT ACTUAL CONDITIONS MAY VARY BETWEEN AND ADJACENT TO TEST PIT LOCATIONS.
10. ALL TEST PITS EXCEPT TP-7 WERE BACKFILLED AND COMPACTED, AND ALL TEST PITS EXCEPT TP-2A, 2B, AND 7 RECEIVED A 6 TO 8 INCH CONCRETE SURFACE PATCH WITH WIRE MESH REINFORCEMENT.
11. IN THESE AREAS INDICATED, THE CONCRETE APRON PAVEMENT WAS OBSERVED TO EXHIBIT SEVERE CRACKING, AND SETTLEMENTS OF UP TO 16" WERE MEASURED AT SEVERAL LOCATIONS. TEST PIT NO. 7 SHOWED THAT CAVITIES DO EXIST IN SOME AREAS ADJACENT TO THE EXISTING BULKHEAD.
12. LOGS FOR SB AND DB BORINGS ARE SHOWN ON SHEET C-23.
13. THE 10" D.O.L. LINE SHOWN ON THE ABOVE PLAN WAS INSTALLED UNDER SEPARATE CONTRACT. THE FEATURES SHOWN ON THIS DRAWING WERE NOTED BY A REPRESENTATIVE OF GREINER ENGINEERING SCIENCES, INC. IN MARCH 1985 AFTER TRENCHING FOR THIS LINE WAS COMPLETED. THIS INFORMATION IS PROVIDED FOR THE CONTRACTORS GENERAL INFORMATION.

LEGEND

- SB — SHALLOW (10' TO 30') STANDARD PENETRATION TEST BORING.
- DB — DEEP (50' TO 75') STANDARD PENETRATION TEST BORING.
- TP — TEST PIT.
- INDICATES LOCATION OF GROUND WATER TABLE.
- REGION OF POTENTIAL CAVITIES - SEE NOTE 11.

40' 20' 0 40'
SCALE: 1" = 40'

4' 2' 0 4'
SCALE: 1" = 4'

REVISIONS

LET	DESCRIPTION	PREP'D BY	DATE	APPROVED

FOR OFFICIAL USE ONLY

Greiner Engineering Sciences, Inc.
CONSULTING ENGINEERS TAMPA, FLORIDA

DSGN EVANS → ZICHLINE → WALKER
SUPV WALKER CHENGR MILITELLO
SUBMITTED BY S. Militello E.V.P. 6/20/86
FIELD DESIGNER TITLE
EIC E.H. Stabrey Jr. DPRHD
FPE DIR

APPROVED DATE
OFFICER IN CHARGE
APPROVED DATE
J. Ally Pie 7/16/86
FOR COMMANDER, NAVFAC

S. Militello 6/20/86
ARCH & ENGR SEAL

C-22

DEPARTMENT OF THE NAVY — NAVAL FACILITIES ENGINEERING COMMAND
SOUTHERN DIVISION
CHARLESTON S.C.

NAVAL AIR STATION KEY WEST, FLA.

PHM BERTHING WHARF
TRUMAN ANNEX
BORING LOCATIONS AND TEST PITS

SIZE	CODE IDENT NO	NAVFAC DRAWING NO
F	80091	5157652
SCALE AS NOTED		CONSTR CONTR NO N62467-85-C-0141
		SPEC 06-85-0141 SHEET 22 OF

REVISIONS				
LET	DESCRIPTION	PREP'D BY	DATE	APPROVED

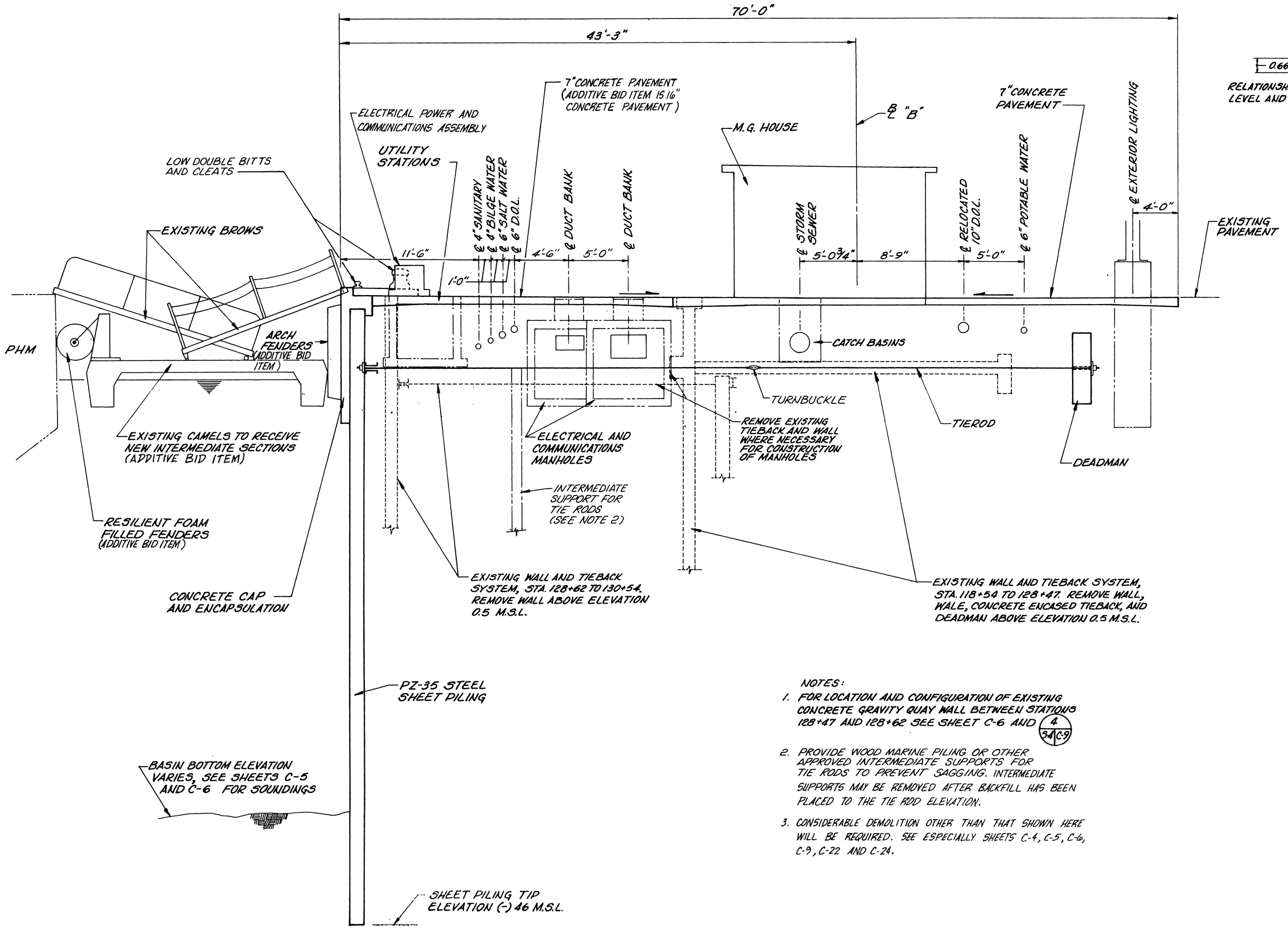

NOTES:

1. FOR LOCATION AND CONFIGURATION OF EXISTING CONCRETE GRAVITY QUAY WALL BETWEEN STATIONS 128+47 AND 128+62 SEE SHEET C-6 AND 4/S-4 C-9
2. PROVIDE WOOD MARINE PILING OR OTHER APPROVED INTERMEDIATE SUPPORTS FOR TIE RODS TO PREVENT SAGGING. INTERMEDIATE SUPPORTS MAY BE REMOVED AFTER BACKFILL HAS BEEN PLACED TO THE TIE ROD ELEVATION.
3. CONSIDERABLE DEMOLITION OTHER THAN THAT SHOWN HERE WILL BE REQUIRED. SEE ESPECIALLY SHEETS C-4, C-5, C-6, C-9, C-22 AND C-24.

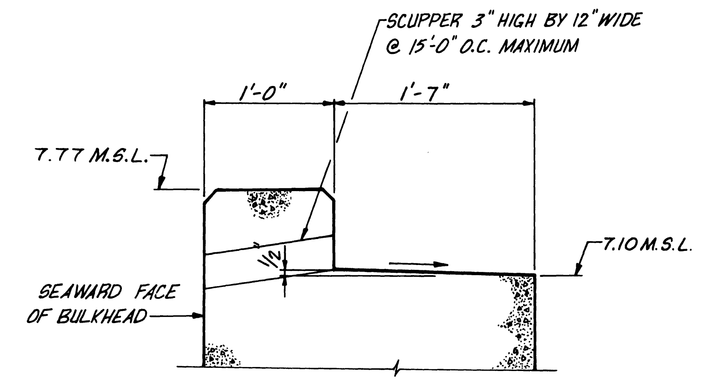

APPLIES FOR NEW BERTHING AREA ℄ "B" STA. 118+54 TO 133+66.

ENCAPSULATION GRADING DETAIL 1/S-4

SCALE: 1 1/2" = 1'-0"

C-13, C-14, WC-4

FOR TIE RODS BETWEEN ℄ PHM RAMP STATIONS 5+16.28 AND 5+61.56 AND WHARF AREA SOUTH OF STA. 130+64.55				
SYSTEM	ROD DIA. (IN.)	UPSET DIA. (IN.)	TURNBUCKLE	ROD MATERIAL
1	3"	3 1/4"	3 1/4"	A-36
2	3 1/4"		3 1/4"	A-36
3	2 1/2"	3 1/4"	3 1/4"	A-588
4	3 1/4"		3 1/4"	A-588

NOTES:

1. THE CONTRACTOR SHALL HAVE THE OPTION TO SELECT ONE OF THE FOUR TIEROD SYSTEMS LISTED ABOVE FOR THE APPROPRIATE AREA. THE SELECTED SYSTEM SHALL NOT BE CHANGED DURING THE COURSE OF THE WORK.
2. ALL CHANNELS USED FOR WALES BEHIND PZ35 SHEETING SHALL BE A-572, GR. 50.
3. THE TIERODS PROVIDED BETWEEN ℄ PHM RAMP STATIONS 5+16.28 AND 5+31.38 SHALL SLOPE FROM EL. 1.25 M.S.L. AT THE WALE TO EL 0.90 AT THE DEADMAN.
4. THE TIERODS PROVIDED ALONG THE WHARF WALLS BETWEEN ℄ "B" STATIONS 118+55.77 AND 120+16.3 SHALL SLOPE FROM EL 1.00 M.S.L. AT THE WALE TO EL (-) 0.10 AT THE DEADMAN.
5. TIEROD SCHEDULE FOR RAMP AND WHARF WALLS SHEET S-3

TYPICAL CROSS SECTION A/S-4

SCALE: 1/4" = 1'-0"

S-1, S-2

12" 6" 0 1' 2'

SCALE: 1 1/2" = 1'-0"

12" 0 2' 4'

SCALE: 1/4" = 1'-0"

FOR OFFICIAL USE ONLY

Greiner Engineering Sciences, Inc.
CONSULTING ENGINEERS TAMPA, FLORIDA

DEPARTMENT OF THE NAVY — NAVAL FACILITIES ENGINEERING COMMAND
SOUTHERN DIVISION
CHARLESTON, S.C.

NAVAL AIR STATION — KEY WEST, FLA.

PHM BERTHING WHARF
TRUMAN ANNEX
SECTIONS AND DETAILS

DSGN EVANS/UNDBERG/WALKER
SUPV WALKER CH ENGR MILITELLO
SUBMITTED BY: S. M. Walker EVP 6/24/86
FIRM MEMBER (TITLE):
DC E. W. Stanzyk/PM-HO
PYE DIR

APPROVED DATE
OFFICER IN CHARGE
APPROVED DATE
EFD FOR COMMANDER, NAVFAC 9/4/86

ARCH & ENGR SEAL

S-4

SIZE	CODE IDENT NO	NAVFAC DRAWING NO
F	80091	5157690
SCALE AS NOTED		CONSTR CONTR NO N62467-85-C-0141
		SPEC 06-85-0141 SHEET 62 OF

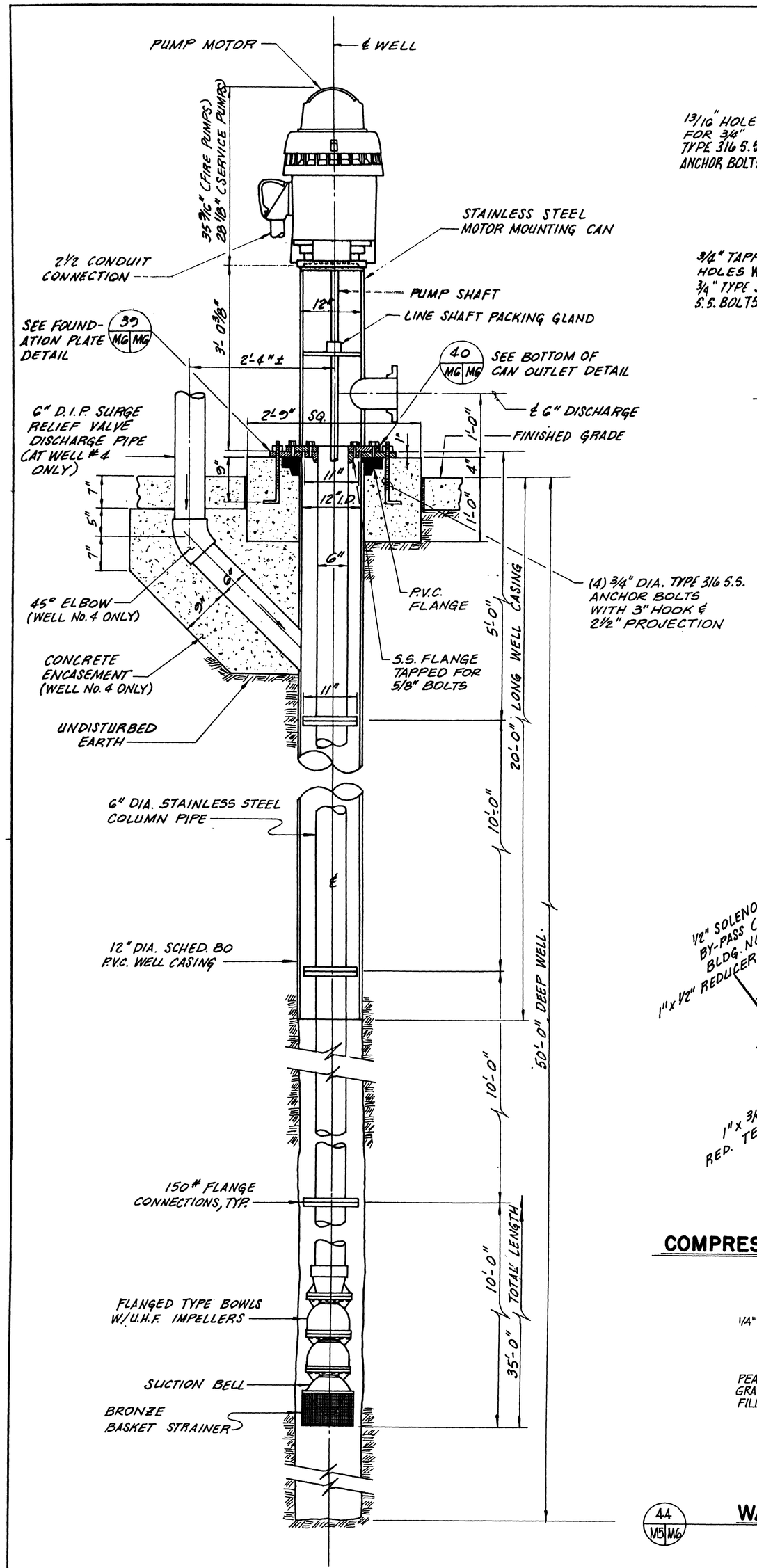

SALT WATER WELL DETAIL

(FOUR REQUIRED)

SCALE: 1" = 1'-0"

35 MS MG

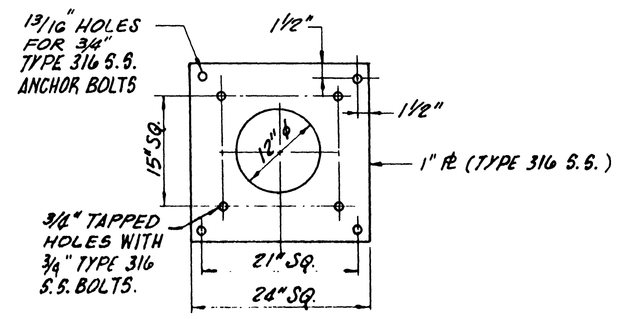

FOUNDATION PLATE DETAIL

SCALE: 1" = 1'-0"

39 MG MG

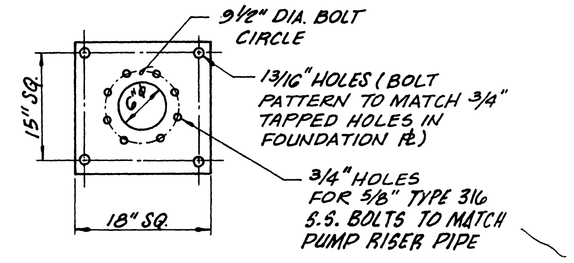

BOTTOM OF CAN OUTLET DETAIL

SCALE: 1" = 1'-0"

40 MG MG

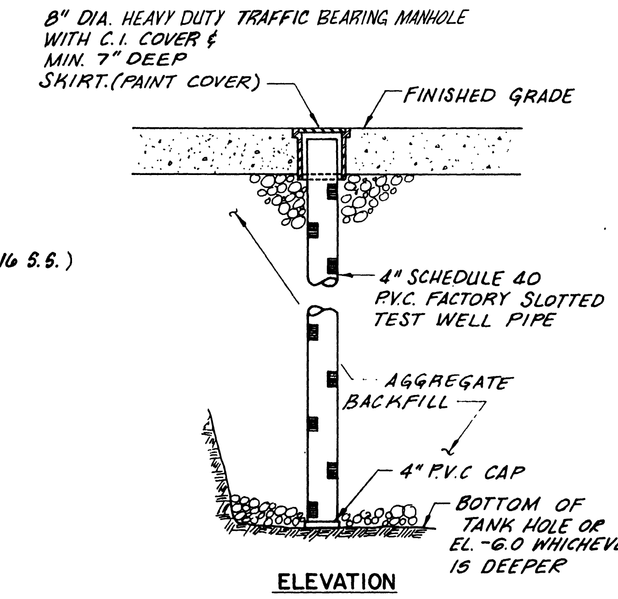

ELEVATION

LEAK MONITORING WELL DETAIL

F-4, WC-4, M-1, M-2, M-5, F-9

NO SCALE

38 MG

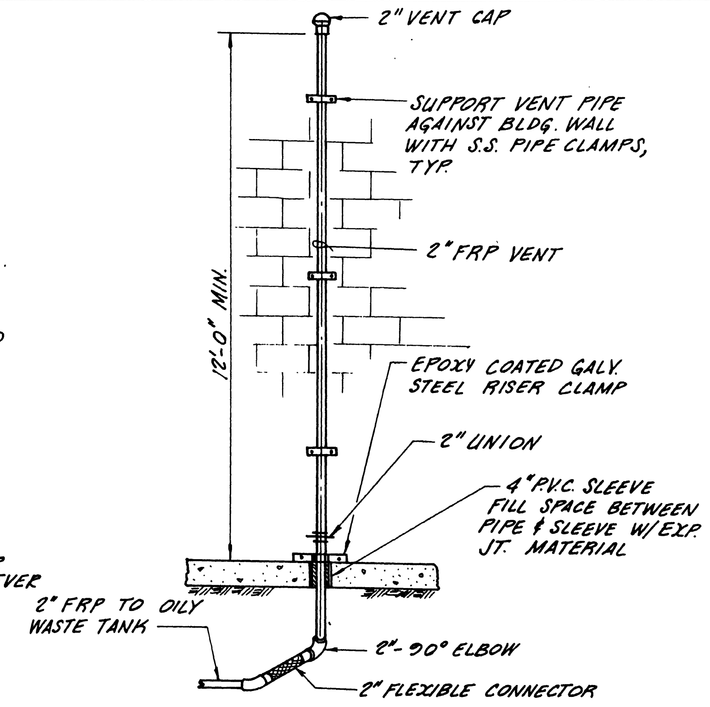

VENT PIPE DETAIL

SCALE: 1/2" = 1'-0"

36 MS MG

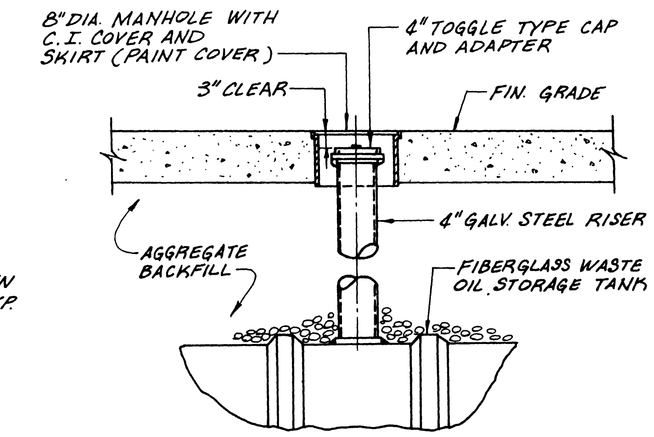

TANK GAUGING / OIL REMOVAL PIPING DETAIL

NO SCALE

37 MS MG

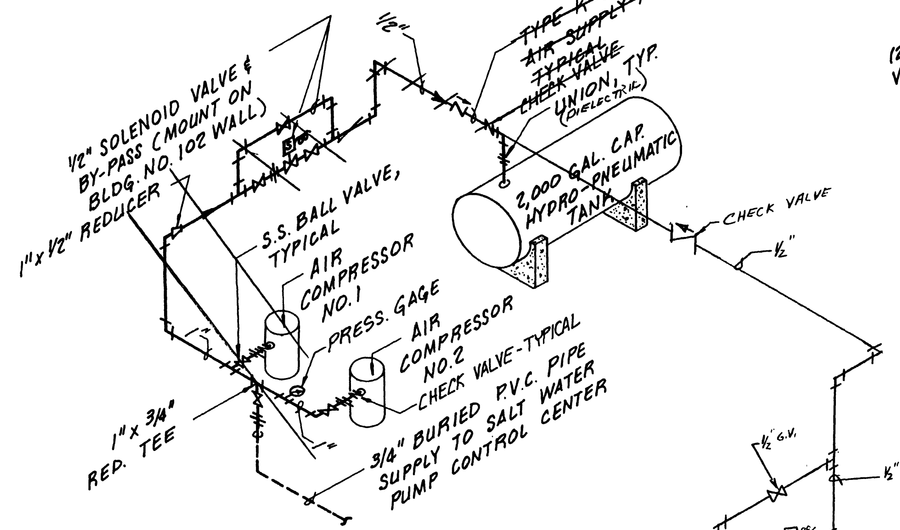

COMPRESSED AIR PIPING SCHEMATIC

NO SCALE

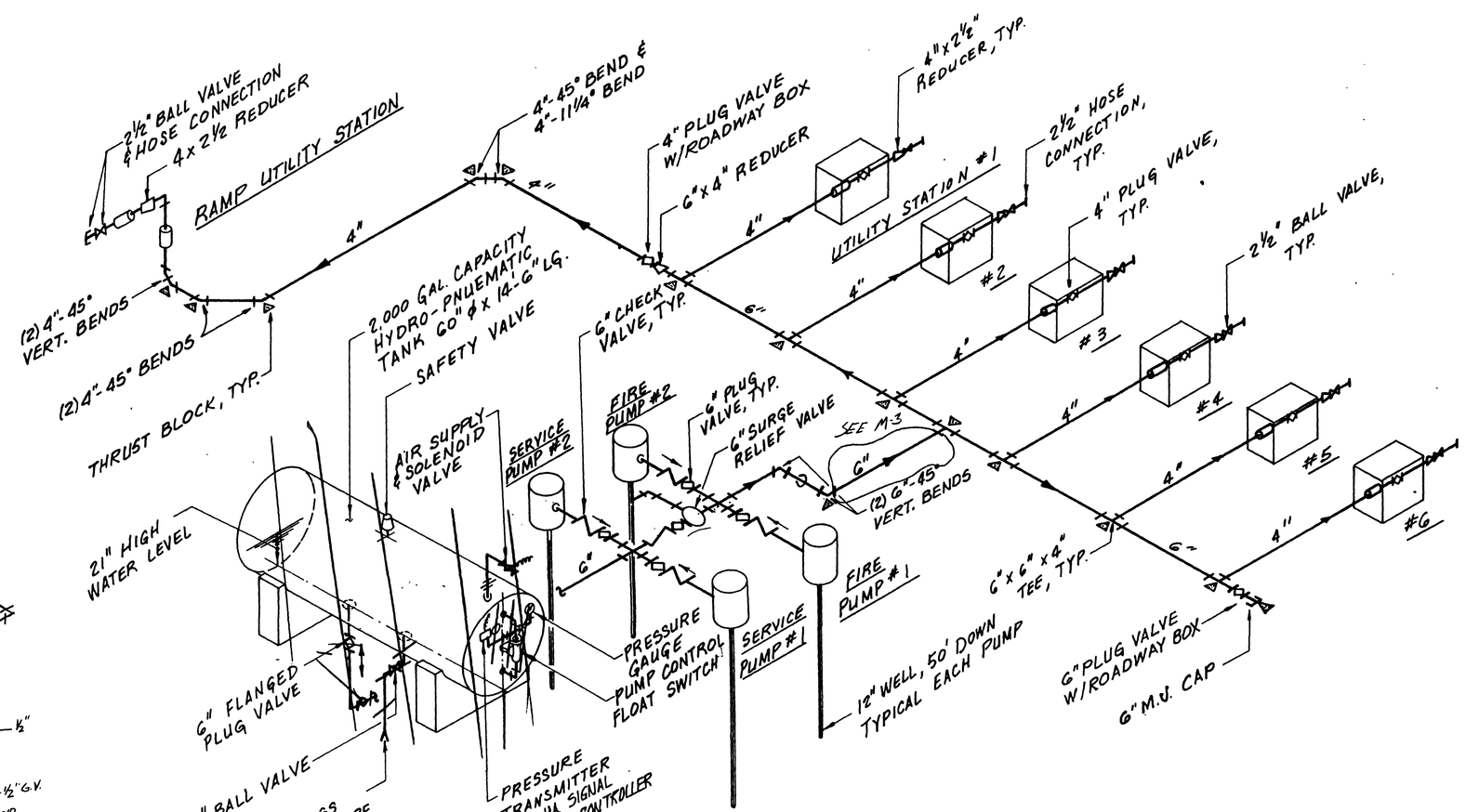

SALT WATER PIPING SCHEMATIC

NO SCALE

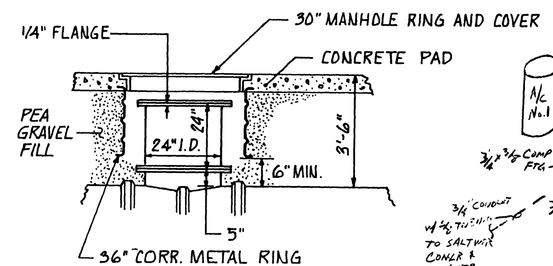

44 MS MG

WASTE OIL TANK ACCESS MANHOLE

NO SCALE

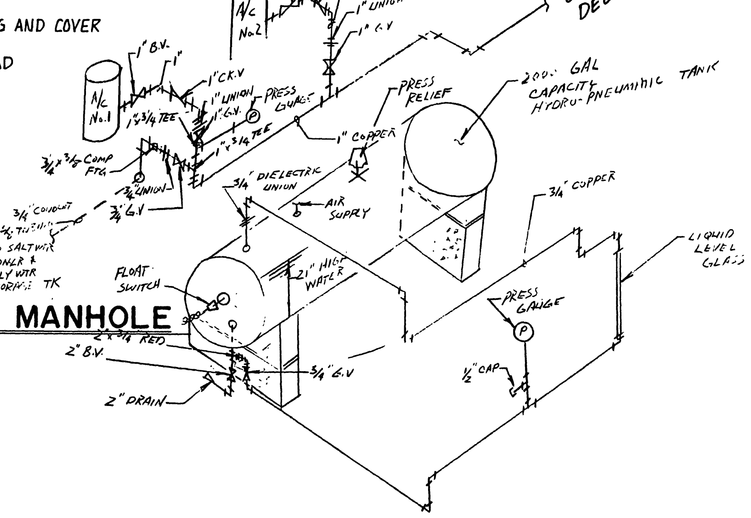

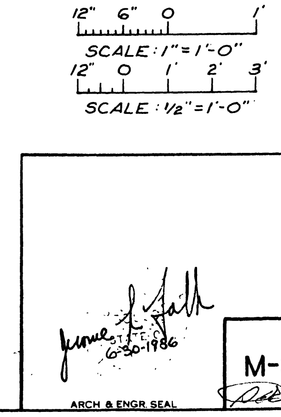

FOR OFFICIAL USE ONLY

REVISIONS				
LET	DESCRIPTION	PREP'D BY	DATE	APPROVED

Greiner Engineering Sciences, Inc
CONSULTING ENGINEERS TAMPA, FLORIDA

DEPARTMENT OF THE NAVY — NAVAL FACILITIES ENGINEERING COMMAND
SOUTHERN DIVISION
CHARLESTON S.C.

NAVAL AIR STATION — KEY WEST, FLA.

PHM BERTHING WHARF
TRUMAN ANNEX
UTILITY DETAILS

DSGN RUSKEY DR DAVIS CHK FALK
SUPV WALKER CH ENGR MILITELLO
SUBMITTED BY S. Militello EVP 6/20/86
FIRM MEMBER (TITLE)
EC E.R. Stennett ARCHO
PE DR

APPROVED DATE
OFFICER IN CHARGE
APPROVED DATE 9/14/86
CDR FOR COMMANDER NAVFAC

ARCH & ENGR SEAL

M-6

SIZE	CODE IDENT NO	NAVFAC DRAWING NO
F	80091	5157660
SCALE AS NOTED	SPEC 06-85-0141	CONSTR CONTR NO N62467-85-C-0141
		SHEET 30 OF

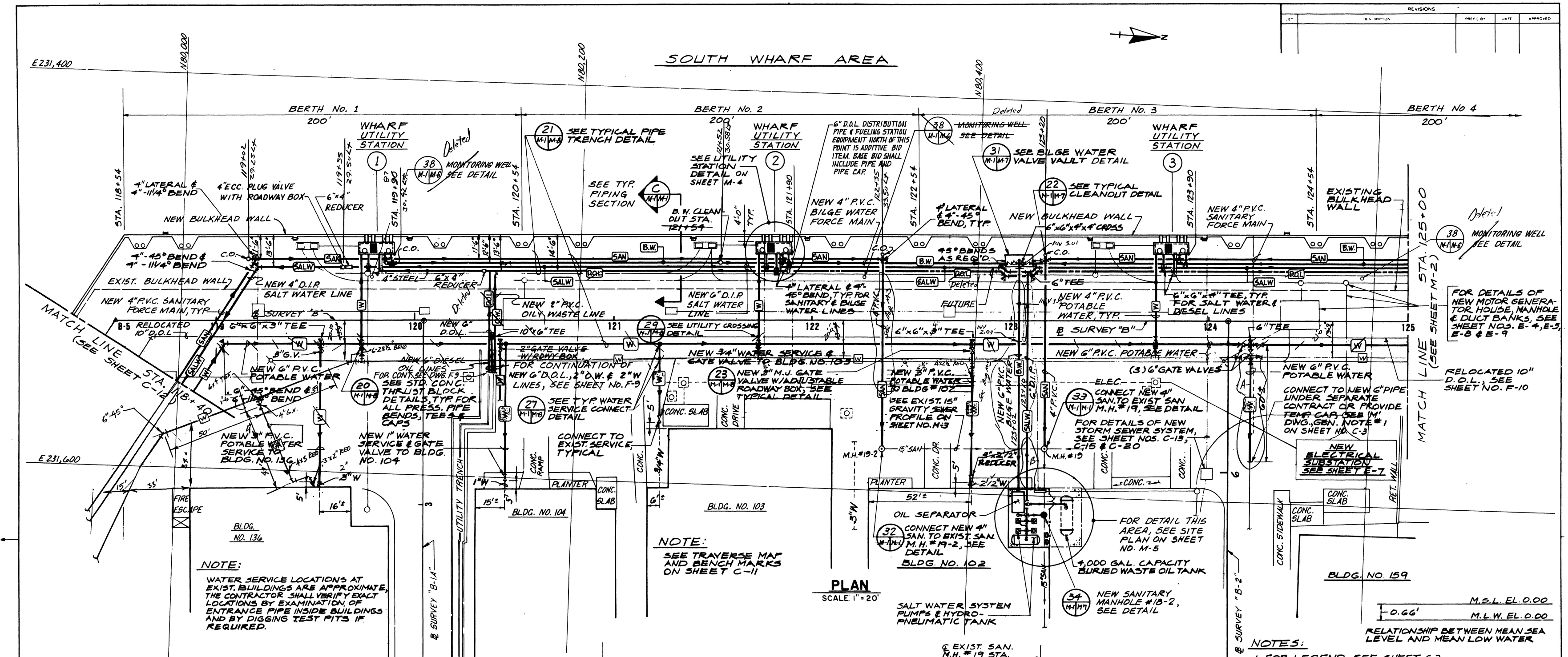

NOTES:

1. FOR LEGEND, SEE SHEET C 2
2. FOR GENERAL NOTES, SEE SHEET C 3
3. THE ELECTRICAL DISTRIBUTION IS SHOWN SCHEMATICALLY ON THIS SHEET AND SHEET M-2. FOR EXACT LOCATIONS AND SIZES, SEE SHTS. E-4 AND E-5.
4. UNLESS OTHERWISE INDICATED, ALL EXISTING STRUCTURES OR UTILITIES ON THIS SHEET WHICH INTERFERE WITH NEW CONSTRUCTION SHALL BE DEMOLISHED AND REMOVED, TO THE EXTENT NECESSARY FOR NEW CONSTRUCTION. THE CONTRACTOR SHALL ALSO DEMOLISH AND REMOVE ALL STRUCTURES AND UTILITIES INDICATED ON OTHER SHEETS.
5. EXISTING PIPE, OBSTRUCTIONS AND ABANDONED UTILITIES SHOWN ARE FROM THE BEST INFORMATION AVAILABLE, BUT NOT GUARANTEED. SHOULD THE CONTRACTOR ENCOUNTER OBSTRUCTIONS AND/OR UTILITIES NOT INDICATED, THE CONTRACTING OFFICER SHALL BE NOTIFIED FOR DISPOSITION.
6. ALL ELEVATIONS SHOWN ARE MEAN SEA LEVEL (M.S.L.).

FOR OFFICIAL USE ONLY

Greiner Engineering Sciences, Inc. — CONSULTING ENGINEERS — TAMPA, FLORIDA

DEPARTMENT OF THE NAVY — NAVAL FACILITIES ENGINEERING COMMAND
SOUTHERN DIVISION
CHARLESTON, S.C.

NAVAL AIR STATION — KEY WEST, FLA.

PHM BERTHING WHARF
TRUMAN ANNEX
UTILITY PLAN - SOUTH WHARF

DSGN: RUSKEY CH DAVIS CHK FALK
SUPV WALKER CH ENGR MILITELLO
SUBMITTED BY: EVP DATE 01/30/86
FIRM NAME & TITLE
EC DIR
FPE DIR
APPROVED DATE
OFFICER IN CHARGE
APPROVED DATE 2/14/86
DEPUTY COMMANDER NAVFAC

ARCH & ENGR SEAL

S. Militello 11/6/84/86

M-1

SIZE: F
CODE IDENT NO: 80091
NAVFAC DRAWING NO: 5157655
CONSTR CONTR NO: N62467-85-C-0141
SCALE: AS NOTED
SPEC 06-85-0141 SHEET 25 OF

REVISIONS				
LET	DESCRIPTION	PREP'D BY	DATE	APPROVED

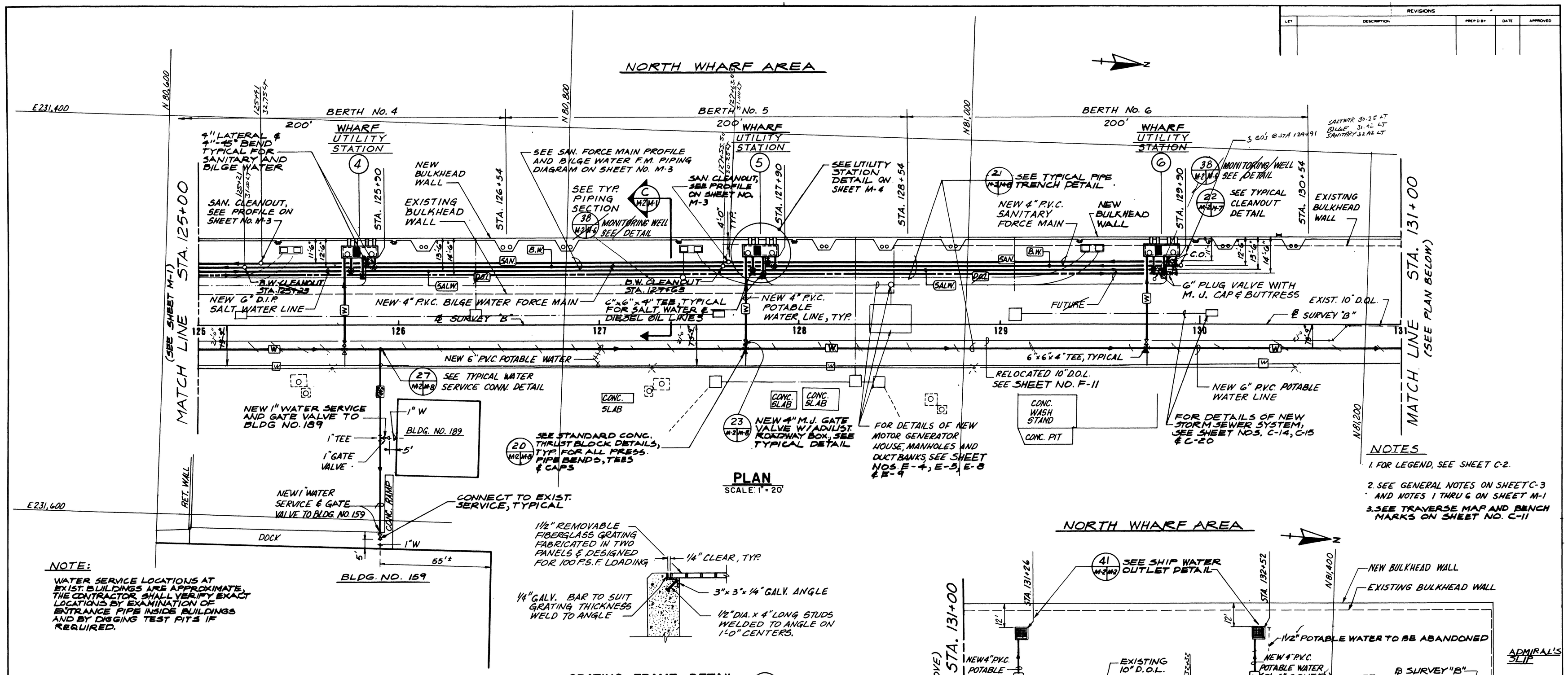

PLAN
SCALE: 1" = 20'

NOTES

1. FOR LEGEND, SEE SHEET C-2.
2. SEE GENERAL NOTES ON SHEET C-3 AND NOTES 1 THRU 6 ON SHEET M-1
3. SEE TRAVERSE MAP AND BENCH MARKS ON SHEET NO. C-11

NOTE:

WATER SERVICE LOCATIONS AT EXIST. BUILDINGS ARE APPROXIMATE. THE CONTRACTOR SHALL VERIFY EXACT LOCATIONS BY EXAMINATION OF ENTRANCE PIPE INSIDE BUILDINGS AND BY DIGGING TEST PITS IF REQUIRED.

GRATING FRAME DETAIL 26 M2
NO SCALE
M2, M4

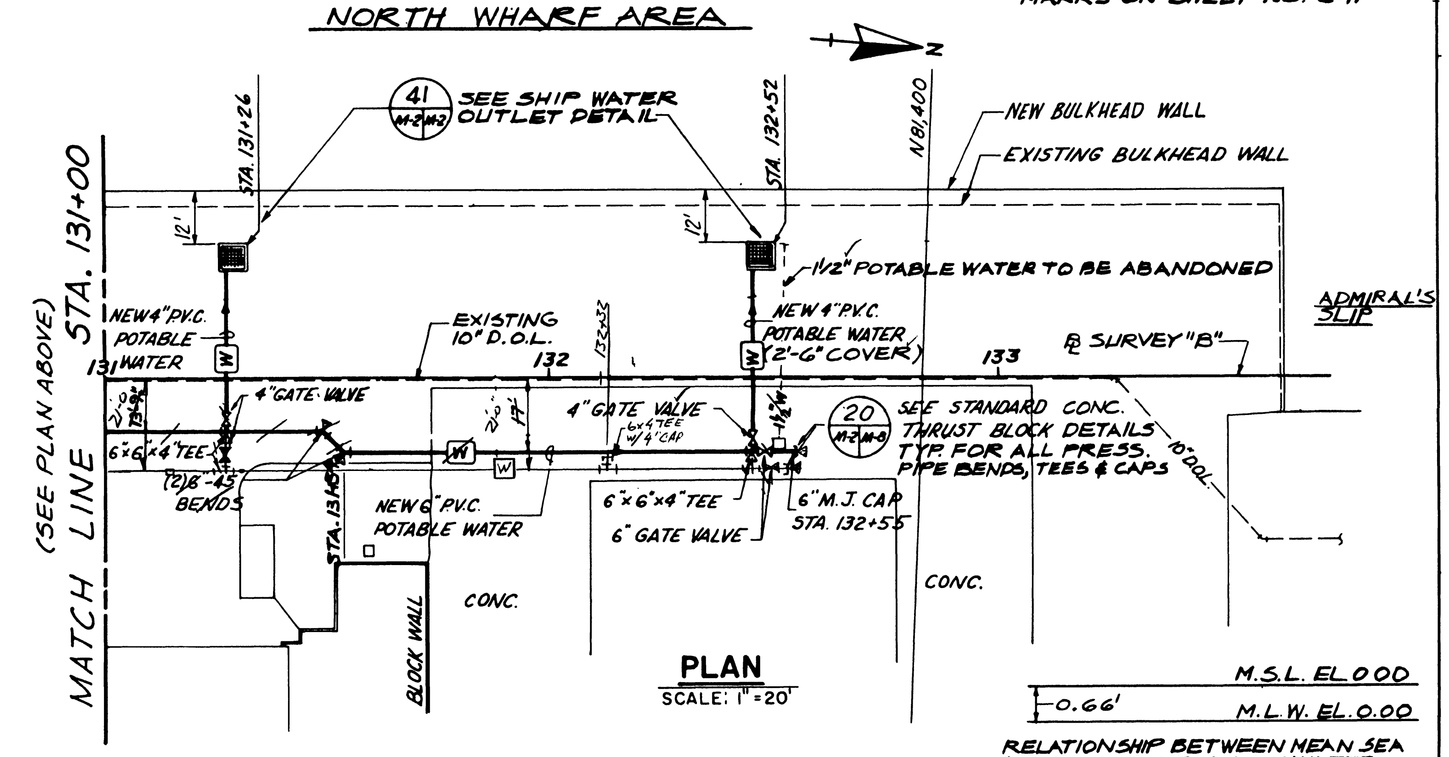

PLAN
SCALE: 1" = 20'

M.S.L. EL 0.00
0.66' M.L.W. EL. 0.00

RELATIONSHIP BETWEEN MEAN SEA LEVEL AND MEAN LOW WATER

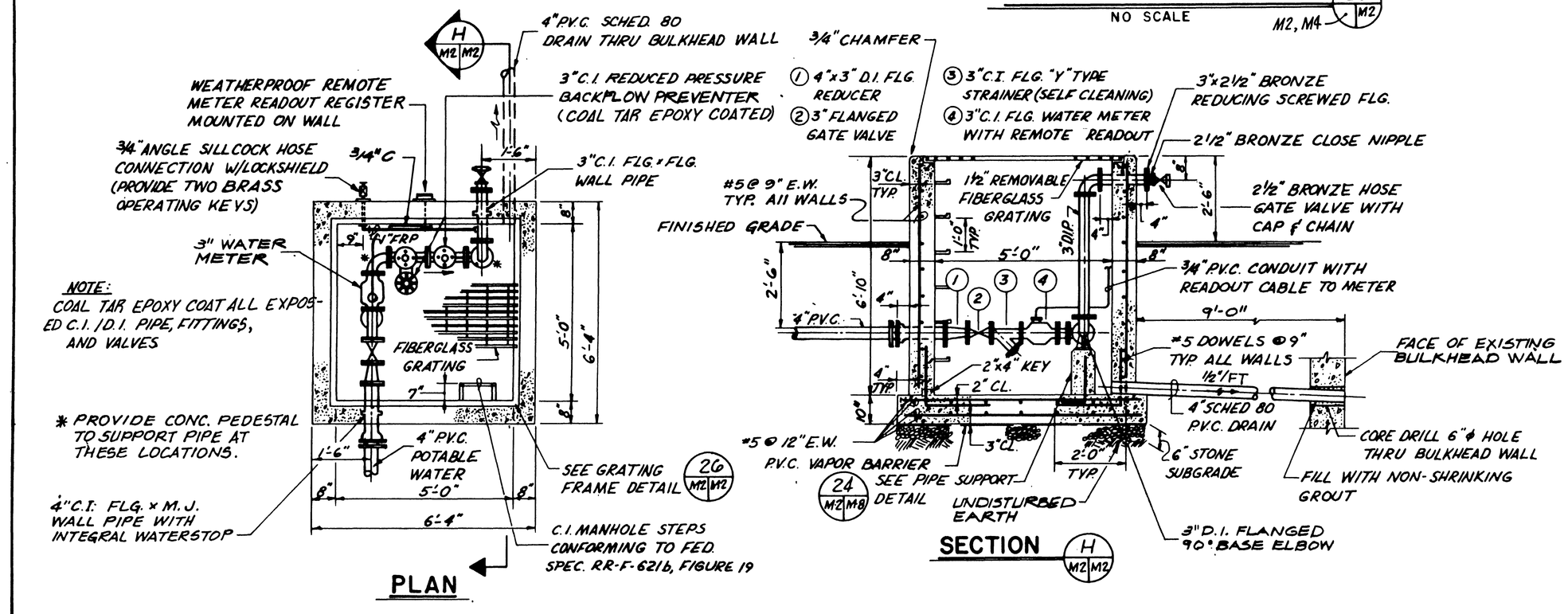

SHIP WATER OUTLET DETAIL 41 M2 M2
(2 REQ'D. - STA. 131+32 & 132+51)
SCALE: 1/2" = 1'-0"

20' 10' 0' 10' 20'
SCALE: 1" = 20'
12" 0 1' 2' 3'
SCALE: 1/2" = 1'-0"

FOR OFFICIAL USE ONLY

Greiner Engineering Sciences, Inc.
CONSULTING ENGINEERS TAMPA FLORIDA

DEPARTMENT OF THE NAVY — NAVAL FACILITIES ENGINEERING COMMAND
SOUTHERN DIVISION
CHARLESTON S C

NAVAL AIR STATION — KEY WEST, FLA.

DSGN RUSKEY DR DAVIS CHK FALK
SUPV WALKER CH ENGR MILITELLO
SUBMITTED BY: J. Militello 6/20/86 DATE
FIRM MEMBER (TITLE)
EX C.H. Stevens BR HD
PPE CHF

PHM BERTHING WHARF
TRUMAN ANNEX
UTILITY PLAN - NORTH WHARF

APPROVED DATE
OFFICER IN CHARGE
APPROVED 4/16/86
FOR COMMANDER, NAVFAC

J. Militello 6/20/86
Jerome L. Falk 6-30-1986
ARCH. & ENGR. SEAL

M-2

SIZE	CODE IDENT NO	NAVFAC DRAWING NO
F	80091	5157656
SCALE AS NOTED	SPEC 06-85-0141	CONSTR CONTR NO N62467-85-C-0141
		SHEET 26 OF

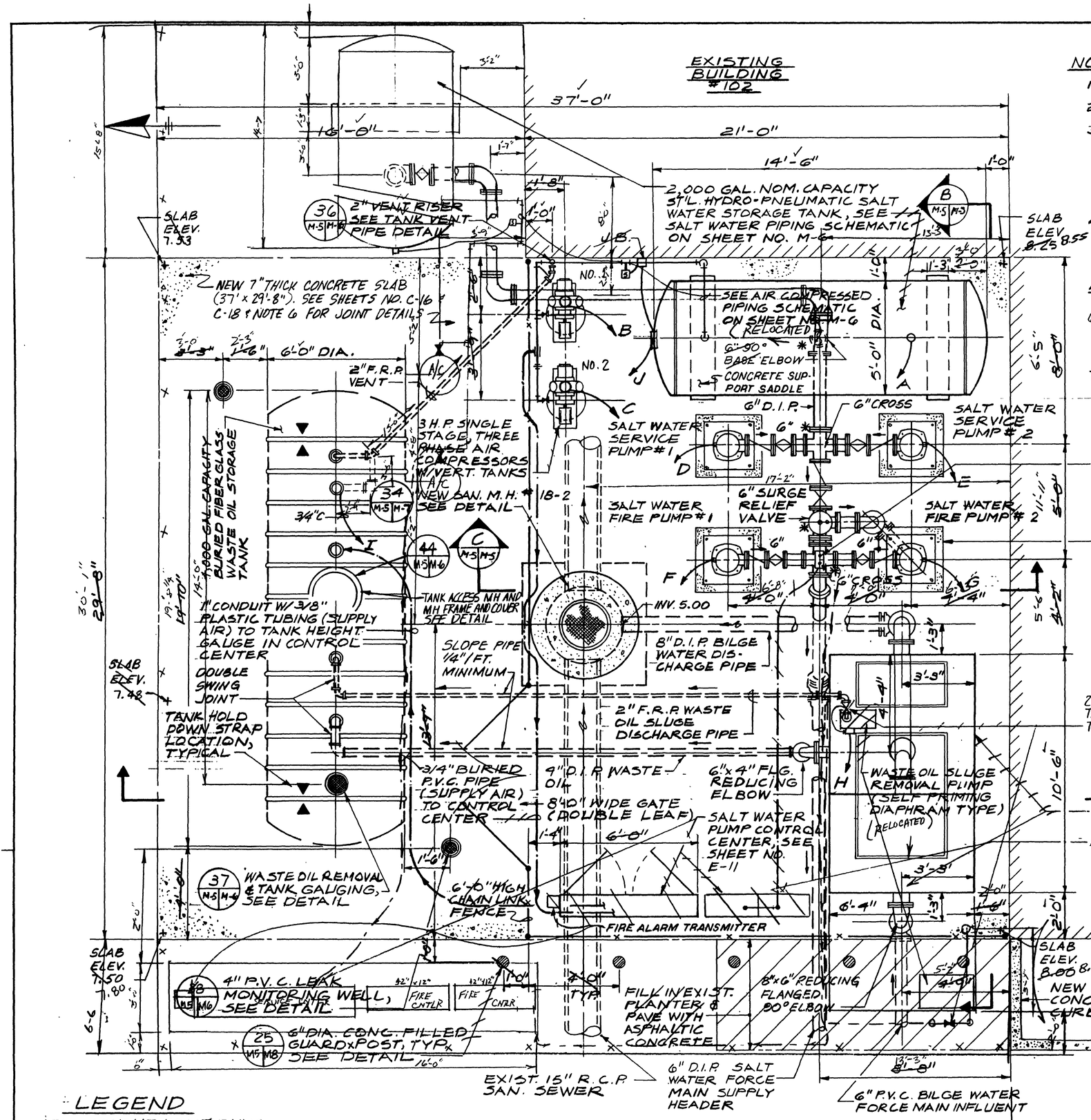

SALT WATER WELLS / OIL SEPARATOR SITE PLAN

SCALE: 3/8" = 1'-0"

NOTES:

1. FOR LEGEND, SEE SHEET NO. C-2.
2. FOR GENERAL NOTES, SEE SHEET NO C-3.
3. SHADED AREAS SHOWN ON SECTION (A) THIS SHEET INDICATE WHERE AGGREGATE BACKFILL WILL NOT FLOW AND COMPACT UNDER TANK. GRAVEL MUST BE WORKED INTO VOIDS FOR APPROX. THE FIRST 12 INCH LAYER OF FILL ABOVE THE BASE LAYER TO INSURE PROPER BEDDING OF THIS CRITICAL AREA.
4. ALL EXPOSED FERROUS METAL PIPING SHALL BE COATED WITH COAL TAR EPOXY AND ALL UNDERGROUND FERROUS PIPING SHALL BE BITUMINOUS COATED, D.I. PIPE SHALL BE CEMENT LINED.
5. ALL ELEVATIONS SHOWN ARE MEAN SEA LEVEL (M.S.L.).
6. PROVIDE TYPE (B) THICKENED EDGE JOINT AT ALL EDGES OF CONCRETE SLAB AND PROVIDE 3 TYPE (A-1) JOINTS AT EQUAL SPACINGS IN BOTH DIRECTIONS ACROSS SLAB.
7. PLACE ½" EXPANSION JOINT MATERIAL AND SEALANT AROUND ALL PROTRUSIONS THRU THE CONCRETE SLAB.

LEGEND

- CONDUIT HOME RUNS TO CONTROL CENTER
- PLASTIC TUBING & P.V.C. PIPE TO CONTROL CENTER

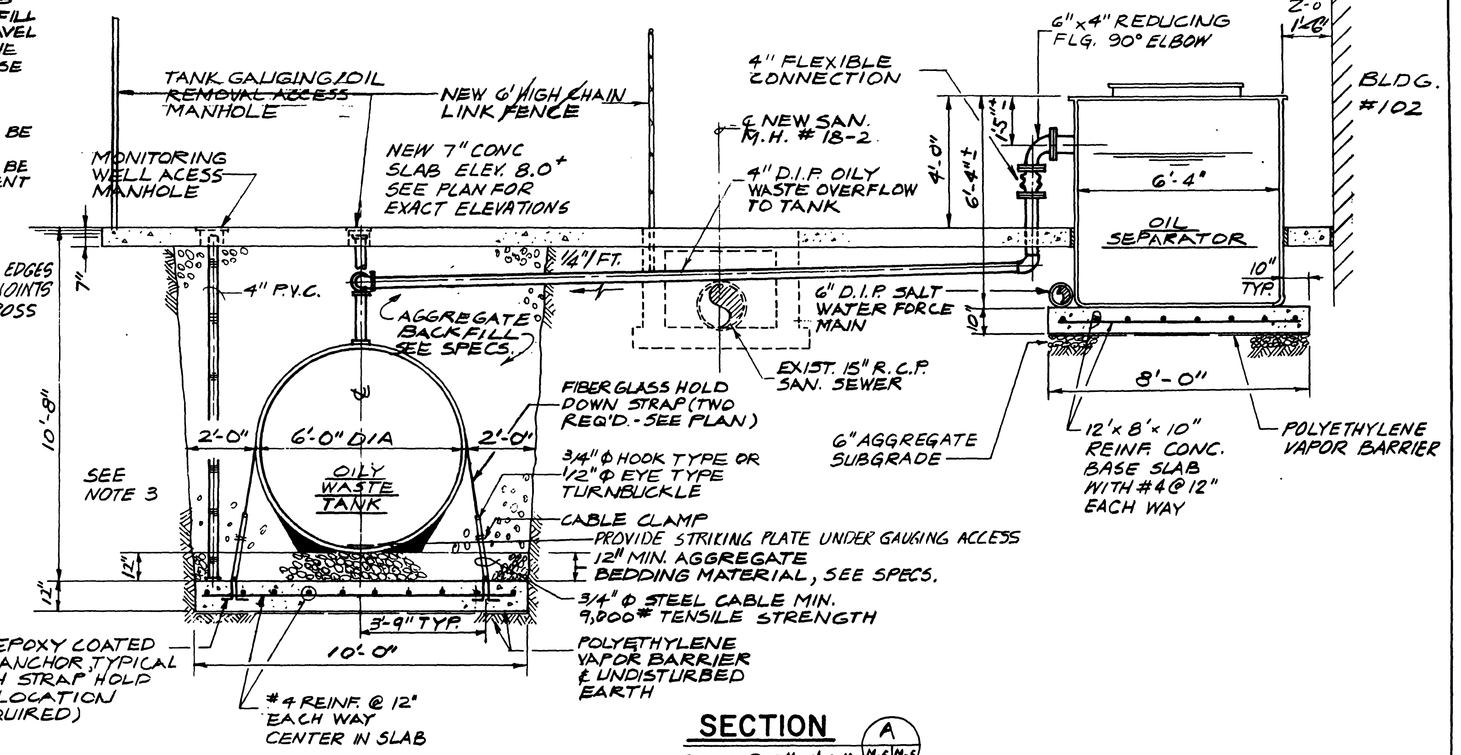

SECTION (A)

SCALE: 3/8" = 1'-0"

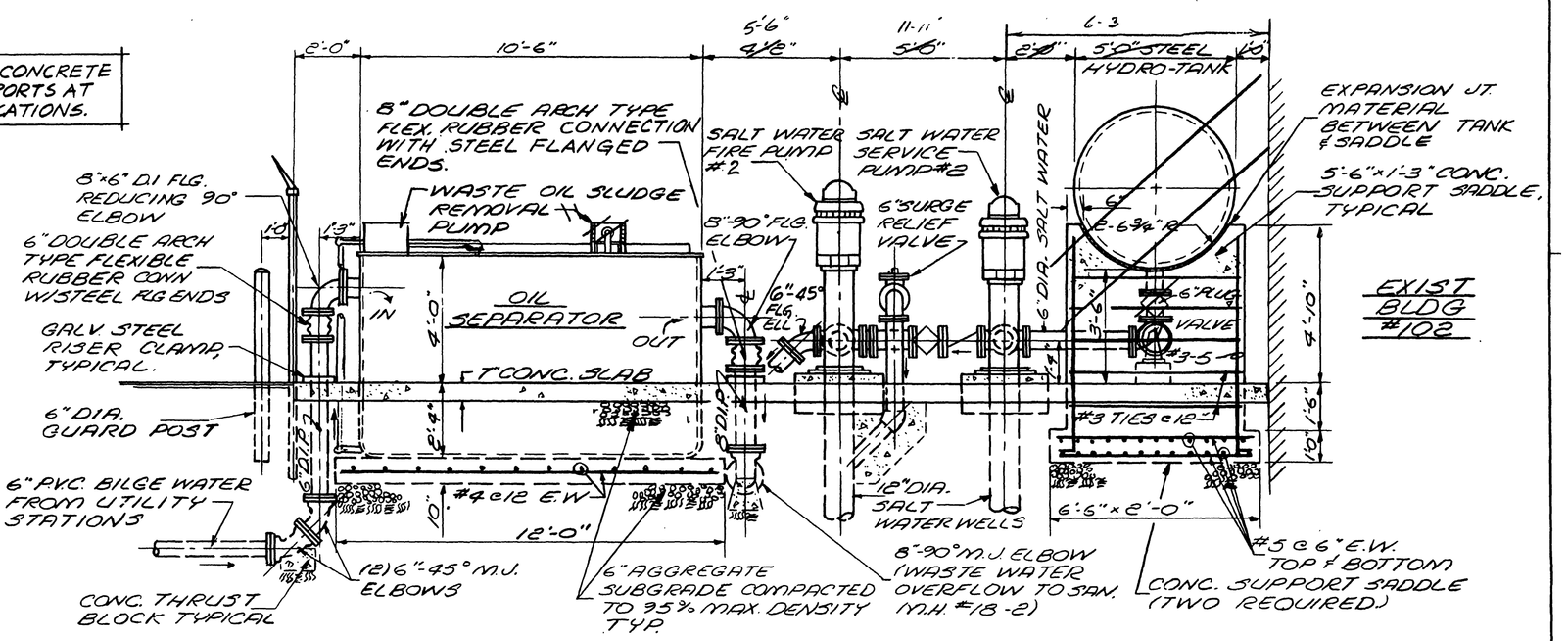

SECTION (B)

SCALE: 3/8" = 1'-0"

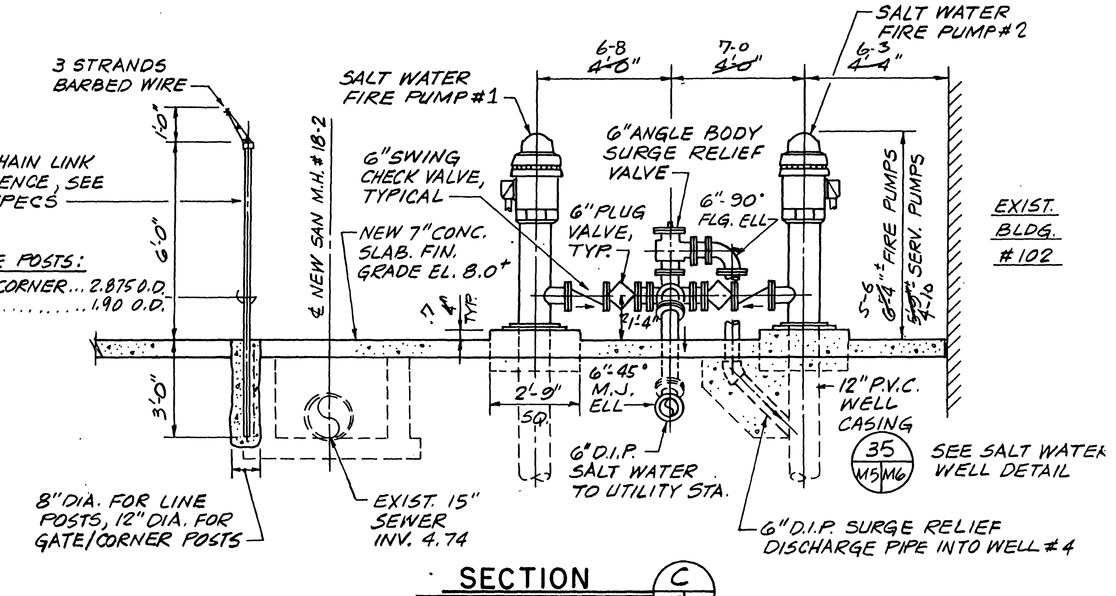

SECTION (C)

SCALE: 3/8" = 1'-0"

12" 0 1' 2' 3' 4' 5'

SCALE: 3/8" = 1'-0"

CONDUIT & WIRE SCHEDULE

CONDUIT DESIGNATION	CONDUIT SIZE	DESCRIPTION
A	3/4"	DIFF. PRESS XMITTER 2-#12 CONDUCTORS
B	3/4"	AIR COMPRESSOR NO. 1 3-#12 CONDUCTORS
C	3/4"	AIR COMPRESSOR NO. 2 3-#12 CONDUCTORS
D	1"	SERVICE PUMP #1 3-#8 CONDUCTORS
E	1"	SERVICE PUMP #2 3-#8 CONDUCTORS
F	2"	FIRE PUMP #1 3-#1/0 CONDUCTORS
G	2"	FIRE PUMP #2 3-#1/0 CONDUCTORS
H	3/4"	SLUDGE PUMP 3-#12 CONDUCTORS PLUS-2 #12 CONDUCTORS FOR SOLENOID VALVE.
I	3/4"	HIGH LEVEL ALARM 2-#12 CONDUCTORS
J	3/4"	FLOAT SWITCH AND SOLENOID VALVE 4-#12 CONDUCTORS

SALT WATER PUMP STATION EQUIPMENT SCHEDULE

DESCRIPTION	NO.	CAPACITY/SIZE
HYDRO-PNEUMATIC TANK	1	2,000 GAL.
SALT WATER WELLS	4	12" DIA.
SERVICE PUMPS	2	500 GPM @ 54 PSIG
FIRE PUMPS	2	500 GPM @ 178 PSIG
OIL/WATER SEPARATOR	1	300 GPM
AIR COMPRESSORS	2	11.9 CFM @ 100 PSIG
WASTE OIL TANK	1	4,000 GAL.
SALT WATER PUMP CONTROLS	1	200 AMP
SURGE RELIEF VALVE	1	6"

M.S.L. EL. 0.00

0.66'

M.L.W. EL. 0.00

RELATIONSHIP BETWEEN MEAN SEA LEVEL AND MEAN LOW WATER

REVISIONS

LET	DESCRIPTION	PREP'D BY	DATE	APPROVED

FOR OFFICIAL USE ONLY

Greiner Engineering Sciences, Inc. CONSULTING ENGINEERS TAMPA, FLORIDA

DSGN RUSKIN-DAVIS CHK FALK
SUP'V WORKMAN CH ENGR MILITELLO
SUBMITTED BY: E. Militello EVP 6/20/86
FIRM NETWORK STYLE:
DC Z.H. Stanczyk BR HD
PPE DIR

ARCH & ENGR SEAL

DEPARTMENT OF THE NAVY — NAVAL FACILITIES ENGINEERING COMMAND
SOUTHERN DIVISION
CHARLESTON S.C.

NAVAL AIR STATION — KEY WEST, FLA.

PHM BERTHING WHARF
TRUMAN ANNEX
SALT WATER WELLS / OIL SEPARATOR DETAILS

APPROVED — DATE
OFFICER IN CHARGE
APPROVED — DATE
CAPT, CEC, USN — 9/16/86
CO, CH COMMANDER NAVFAC

M-5

SIZE: F — CODE IDENT NO: 80091 — NAVFAC DRAWING NO: 5157659
CONSTR CONTR NO: N62467-85-C-0141
SCALE: AS NOTED — SPEC: 06-85-0141 — SHEET 29 OF

NOTE

UNPAVED AREAS ARE TO BE RESTORED TO ORIGINAL CONDITION

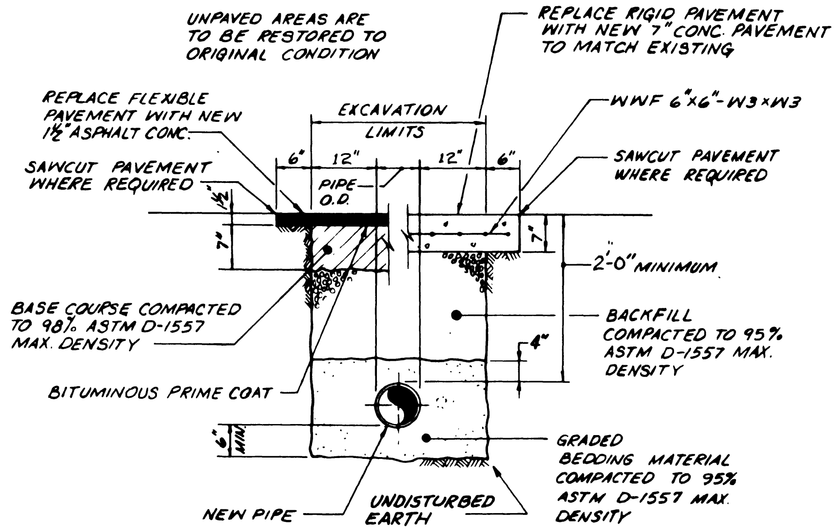

TYPICAL PIPE TRENCH DETAIL

NO SCALE — 21 / M8 — C-12, M-1, M-2

HORIZONTAL BUTTRESS SCHEDULE										
SIZE	90° BENDS		45° BENDS		22½° BENDS*		TEES		CAPS	
	A	B	A	B	A	B	A	B	C	D
4"	14"	8"	7"	8"	6"	7"	8"	10"	8"	17"
6"	16"	10"	9"	10"	6"	8"	10"	12"	10"	21"
10"	26"	17"	14"	17"	10"	13"	16"	20"	14"	36"

* OR LESS

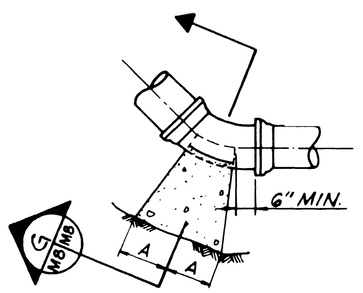

PLAN - BENDS

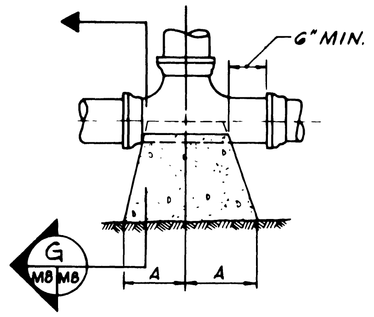

PLAN - TEES

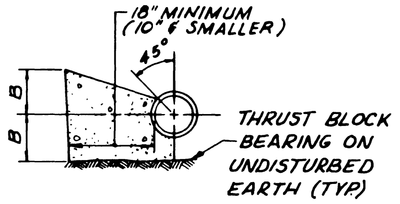

SECTION BENDS & TEES — G / M8 M8

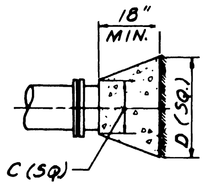

PLAN - CAPS

BUTTRESSES FOR HORIZONTAL BENDS, TEES & CAPS

VERTICAL BUTTRESS SCHEDULE												
SIZE	45° BENDS			22½° BENDS*			VERTICAL ANCHORAGE SCHEDULE					
							45° BENDS			22½° BENDS*		
	A	B	C	A	B	C	A	B	C	A	B	C
4"	15"	6"	6"	12"	6"	6"	24"	24"	30"	18"	18"	27"
6"	15"	7"	7"	12"	7"	7"	30"	30"	36"	24"	21"	30"
10"	25"	9"	10"	18"	8"	8"	48"	42"	54"	44"	30"	46"

* OR LESS

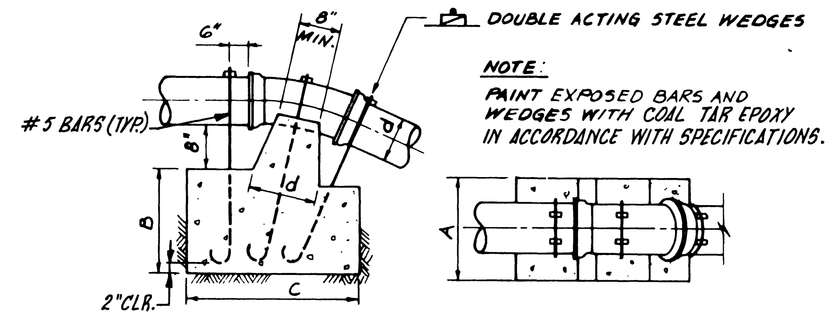

NOTE:
PAINT EXPOSED BARS AND WEDGES WITH COAL TAR EPOXY IN ACCORDANCE WITH SPECIFICATIONS.

ELEVATION — PLAN

ANCHORAGE FOR VERTICAL BENDS

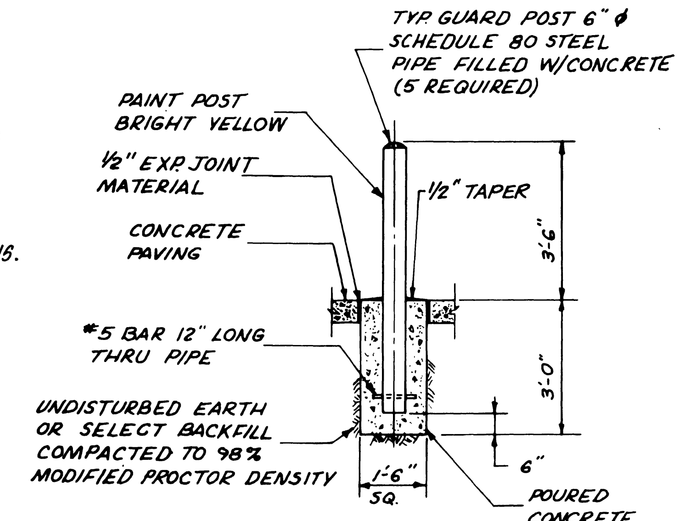

GUARD POST DETAIL

SCALE: 1/2" = 1'-0" — 25 / M5 M8

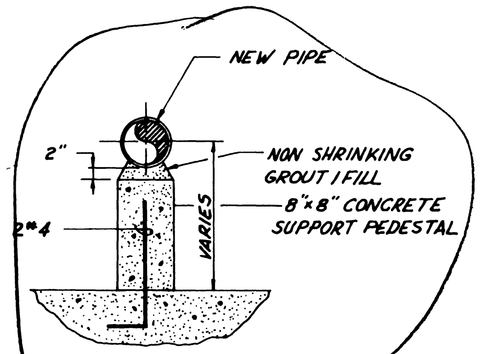

TYPE I

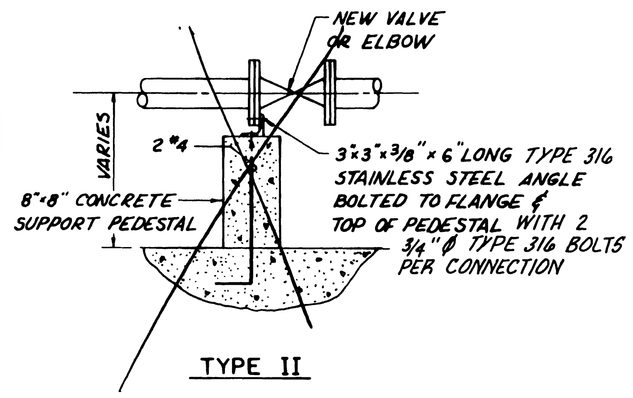

TYPE II

PIPE SUPPORT DETAIL

NO SCALE — 24 / M8 — M-2, M-4, M-5, M-6, M-7

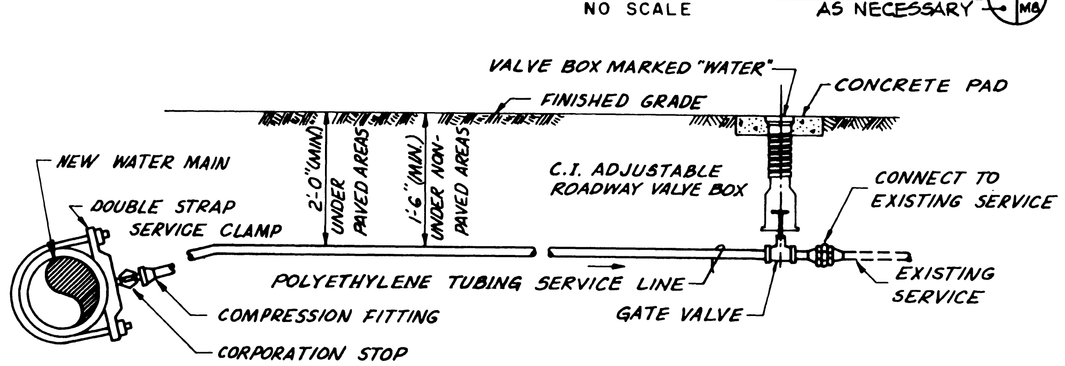

1. SUCCESSIVE TAPS INTO THE WATER MAIN SHALL BE SPACED NOT LESS THAN 18" ON CENTERS.
2. NEW SERVICE PIPE SHALL BE AS SHOWN.
3. FOR 1" SERVICE LINES THE MINIMUM RADIUS SHALL BE 14" FOR 1½" SERVICES THE MINIMUM RADIUS SHALL BE 21."

TYPICAL WATER SERVICE CONNECTION DETAIL

NO SCALE — 27 / M8 — M-1, M-2

STANDARD THRUST BLOCK DETAILS

NO SCALE — AS NECESSARY — 20 / M8

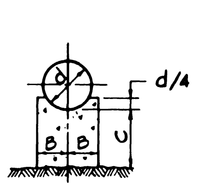

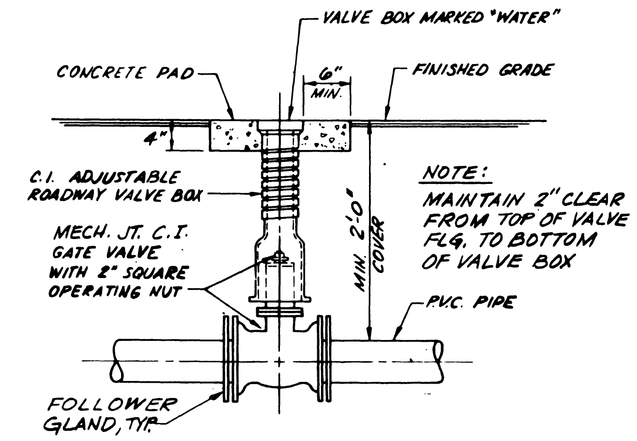

NOTE:
MAINTAIN 2" CLEAR FROM TOP OF VALVE FLG. TO BOTTOM OF VALVE BOX

GATE VALVE & BOX DETAIL

NO SCALE — 23 / M8 — C-12, M-1, M-2

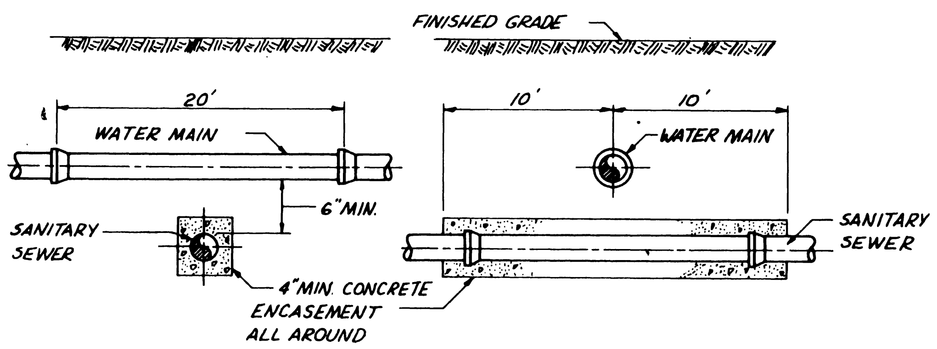

1. WHERE THE LOCATION OF THE WATER LINE IS NOT CLEARLY DEFINED BY DIMENSIONS ON THE DRAWINGS DO NOT LAY WATER LINE CLOSER HORIZONTALLY THAN 10 FEET FROM ANY SEWER LINE.
2. WHERE WATER LINES CROSS UNDER GRAVITY SEWER LINES, ENCASE SEWER LINE FULLY IN CONCRETE FOR A DISTANCE OF AT LEAST 10 FEET ON EACH SIDE OF THE CROSSING, UNLESS SEWER LINE IS MADE OF PRESSURE PIPE WITH RUBBER-GASKETED JOINTS AND NO JOINT IS LOCATED WITHIN 3 FEET HORIZONTALLY OF THE CROSSING.
3. LAY WATER LINES WHICH CROSS SEWER FORCE MAINS AT LEAST 2 FEET ABOVE SEWER LINES; WHEN JOINTS IN THE SEWER LINE ARE CLOSER THAN 3 FEET HORIZONTALLY FROM THE WATER LINE, ENCASE JOINTS IN CONCRETE.
4. CONSTRUCTION SHALL CONFORM WITH SPECIFICATION 02713 PARAGRAPH 3.1.1.1

CONCRETE ENCASEMENT DETAIL

NO SCALE — AS NECESSARY — 28 / M8

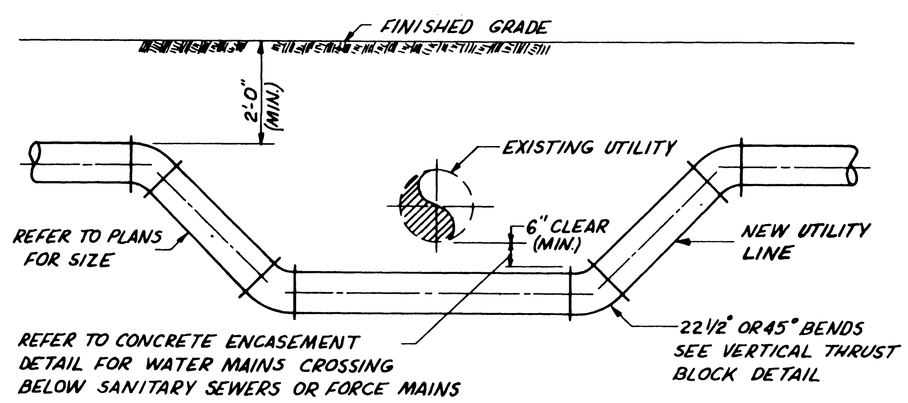

UTILITY CROSSING DETAIL

NO SCALE — AS NECESSARY — 29 / M8

12" 0' 1' 2' 3'
SCALE: 1/2" = 1'-0"

REVISIONS

NO.	DESCRIPTION	PREP'D BY	DATE	APPROVED

FOR OFFICIAL USE ONLY

Greiner Engineering Sciences, Inc. — CONSULTING ENGINEERS — TAMPA, FLORIDA

DEPARTMENT OF THE NAVY — NAVAL FACILITIES ENGINEERING COMMAND
SOUTHERN DIVISION — CHARLESTON, S.C.

DSGN: RUSKEY CH: LUTZ CHK: FALK
SUPV: WALKER CH ENGR: MILITELLO
SUBMITTED BY: S. Militello GUP 6/20/86
FIRM MEMBER (TITLE): E.W. Stumpf
EIC ___ BR HD ___ PM ___ DR ___
APPROVED ___ DATE ___
OFFICER IN CHARGE
APPROVED: Filly P.E. 9/16/86
EFD FOR COMMANDER NAVFAC

NAVAL AIR STATION — KEY WEST, FLA.

PHM BERTHING WHARF
TRUMAN ANNEX
UTILITY DETAILS

M-8

ARCH & ENGR SEAL

SIZE	CODE IDENT NO	NAVFAC DRAWING NO
F	80091	5157662

CONSTR CONTR NO N62467-85-C-0141
SCALE AS NOTED — SPEC 06-85-0141 — SHEET 32 OF

SOUTHDIV-6-110/12 REV 2-81

REVISIONS				
LET	DESCRIPTION	PREP'D BY	DATE	APPROVED

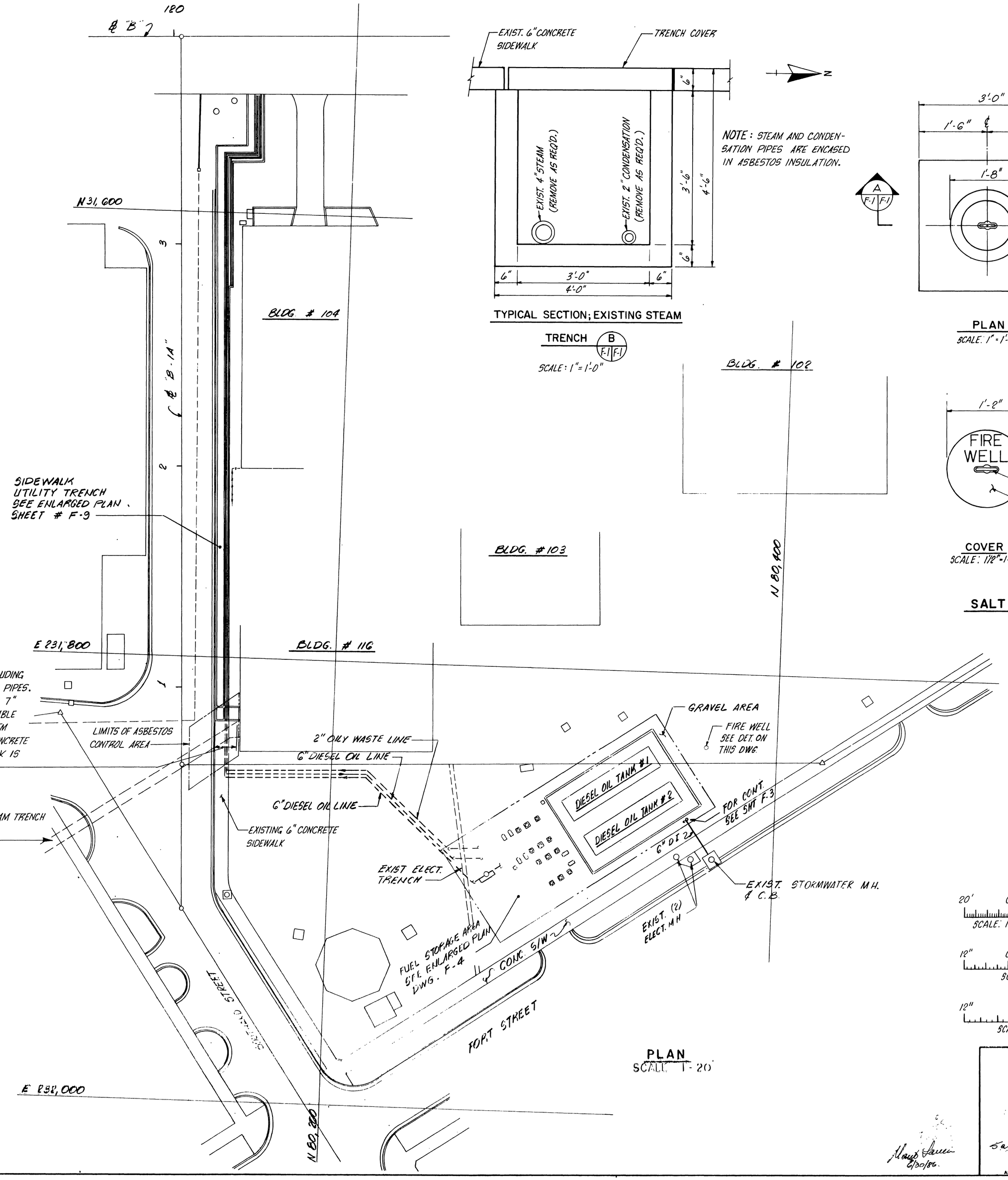

PLAN
SCALE: 1" = 20'

NOTE: STEAM AND CONDENSATION PIPES ARE ENCASED IN ASBESTOS INSULATION.

TYPICAL SECTION; EXISTING STEAM TRENCH B F-1 F-1
SCALE: 1" = 1'-0"

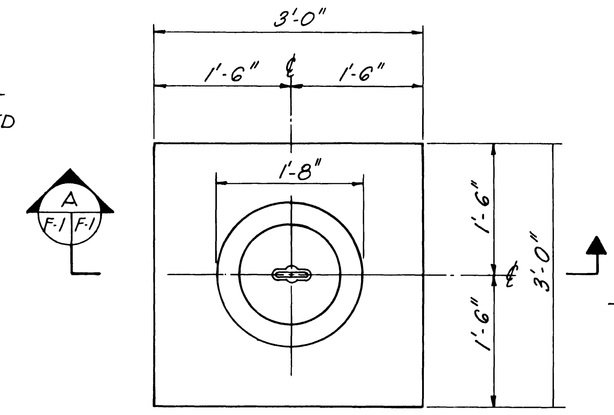

PLAN
SCALE: 1" = 1'-0"

NOTE:
FOR LEGEND SEE DRAWING C-2.

NOTE:
LID SHALL BE LOCKABLE AND CONTRACTOR SHALL PROVIDE CONTRACTING OFFICER WITH KEY.

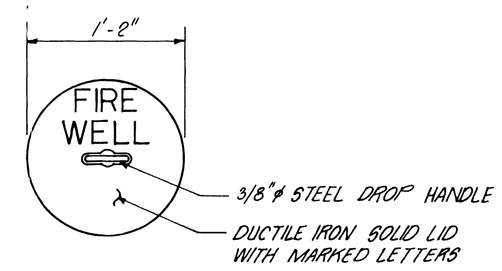

COVER
SCALE: 1 1/2" = 1'-0"

SALT WATER WELL DETAIL

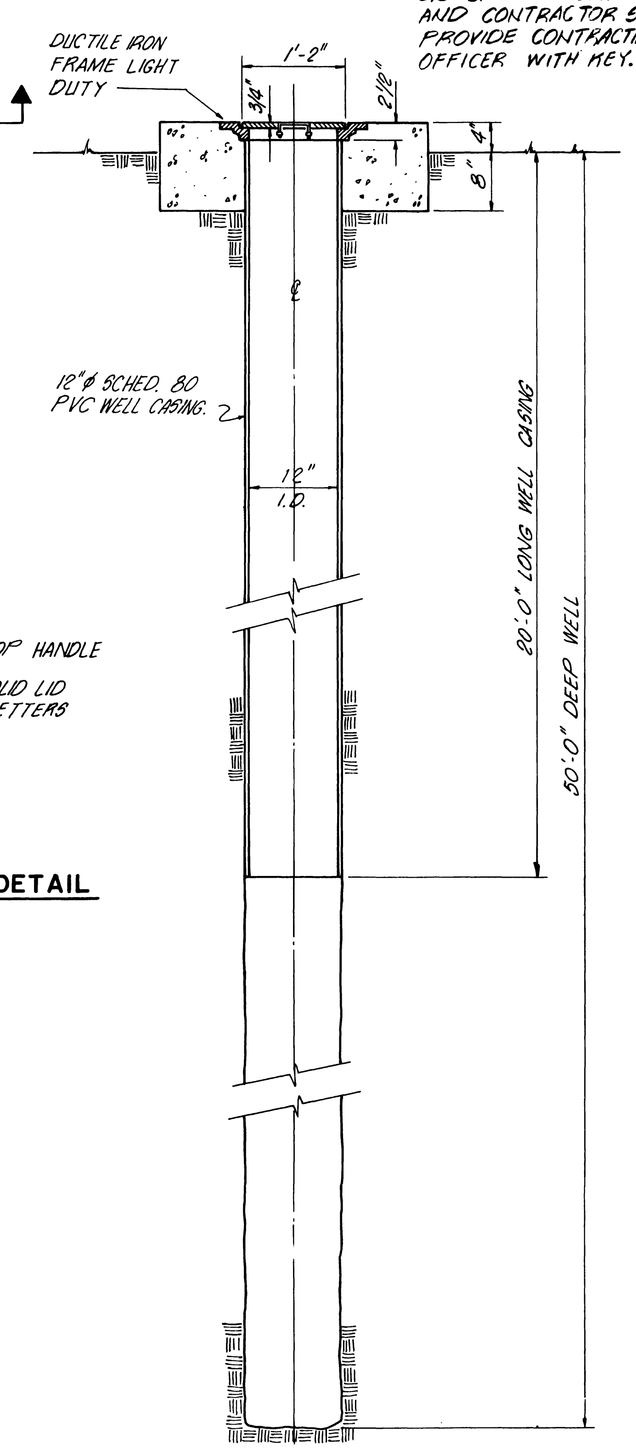

SECTION A F-1 F-1
SCALE: 1" = 1'-0"

20' 0 20'
SCALE: 1" = 20'

12" 0 1' 2'
SCALE: 1" = 1'-0

12" 0 1'
SCALE: 1 1/2" = 1'-0"

FOR OFFICIAL USE ONLY

Greiner Engineering Sciences, Inc.
CONSULTING ENGINEERS TAMPA, FLORIDA

DESIGN: PATRONA-LAMBIA-LARREA
SURV: WALKER CHECKED: MILLER
SUBMITTED BY: S. Mitchell SUP. DATE 6/30/86
FIELD ENGINEER TITLE: A
EIC: J.H. Stroup BRHD: AB Foster
TPC: DIR:

THE DEPARTMENT OF THE NAVY
NAVAL FACILITIES ENGINEERING COMMAND
SOUTHERN DIVISION
CHARLESTON, S.C.

NAVAL AIR STATION KEY WEST, FLA

PHM BERTHING WHARF
TRUMAN ANNEX
FUEL OIL DISTRIBUTION SYSTEM

Sam Mitchell 6/30/86
ARCH & ENGR SEAL

F-1

APPROVED DATE
OFFICER IN CHARGE
APPROVED DATE
FOR THE COMMANDER, NAVFAC

SIZE	CODE IDENT NO	NAVFAC DRAWING NO
F	80091	5157663
		CONSTR CONTR NO N62467-85-C-0141
SCALE AS NOTED	SPEC 06-85-0141	SHEET 33 OF

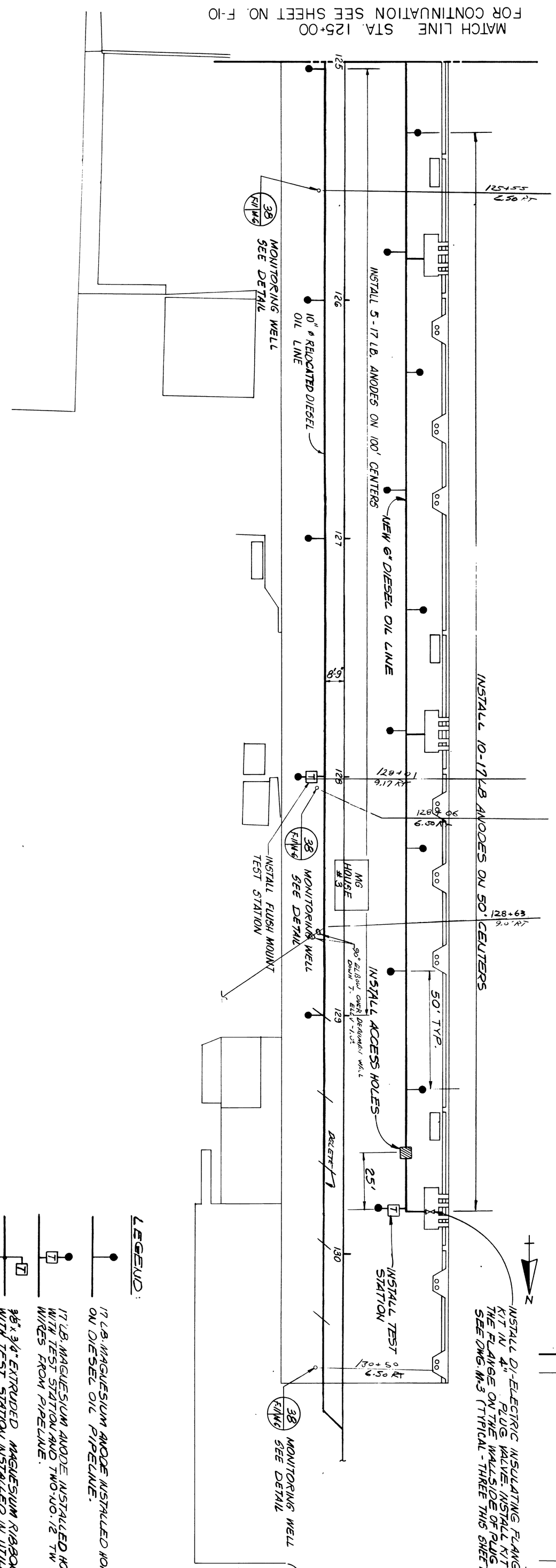

LEGEND:

- 17 LB. MAGNESIUM ANODE INSTALLED HORIZONTALLY ON DIESEL OIL PIPELINE.
- 17 LB. MAGNESIUM ANODE INSTALLED HORIZONTALLY WITH TEST STATION AND TWO-NO. 12 TW WHITE WIRES FROM PIPELINE.
- 3/8" x 3/4" EXTRUDED MAGNESIUM RIBBON ANODE WITH TEST STATION INSTALLED IN UTILITY TRENCH AND CENTERED BETWEEN PIPELINES.
- ACCESS HOLE TO SOIL DIRECTLY OVER PIPELINE, CENTERED BETWEEN ANODES.
- NO. 8 HMWPE BOND CABLE THERMIT WELDED TO 2.6" DIESEL PIPELINES.

NOTES:

1. ALL 17 LB. ANODES TO BE INSTALLED HORIZONTALLY AND PARALLEL TO PIPE.
2. BOND CABLE BETWEEN 2.6" DIESEL PIPELINES TO BE NO. 8 HMWPE CABLE. THERMIT WELD CABLE TO BOTH PIPES AND REPAIR COATING.
3. MAGNESIUM RIBBON ANODE TO BE INSTALLED IN UTILITY TRENCH AND CENTERED BETWEEN PIPELINES. RIBBON ANODE TO BE INSTALLED TO A MINIMUM DEPTH EQUAL TO THE DEPTH OF THE BOTTOM OF THE PIPELINES.

SCALE: 1" = 20'

LET	DESCRIPTION	PREP'D BY	DATE	APPROVED
	REVISIONS			

FOR OFFICIAL USE ONLY

Greiner Engineering Sciences, Inc.
CONSULTING ENGINEERS TAMPA, FLORIDA

DSGN LARREA-RODRIGUEZ-LARREA
SUPV WALKER CH ENGR MILITELLO DATE 6/20/86
SUBMITTED S. Militello DATE 6/20/86
FIRM REPRES (TITLE) CAD Manager
EIC DIR
FPE DIR HD

APPROVED DATE
OFFICER IN CHARGE DATE
APPROVED
EIC FOR COMMANDER NAVFAC 7/16/86

DEPARTMENT OF THE NAVY NAVAL FACILITIES ENGINEERING COMMAND
SOUTHERN DIVISION
CHARLESTON, S.C.
NAVAL AIR STATION KEY WEST, FLA

PHM BERTHING WHARF
TRUMAN ANNEX
PIPING RELOCATION AND CATHODIC PROTECTION-NORTH

SIZE F | CODE IDENT NO 80091 | NAVFAC DRAWING NO 5157673
SCALE 1" = 20' | CONSTR CONTR NO N62467-85-C-0141
SPEC 06-85-0141 | SHEET 43 OF

F-11

ARCH. & ENGR. SEAL

REVISIONS				
LET	DESCRIPTION	PREP'D BY	DATE	APPROVED

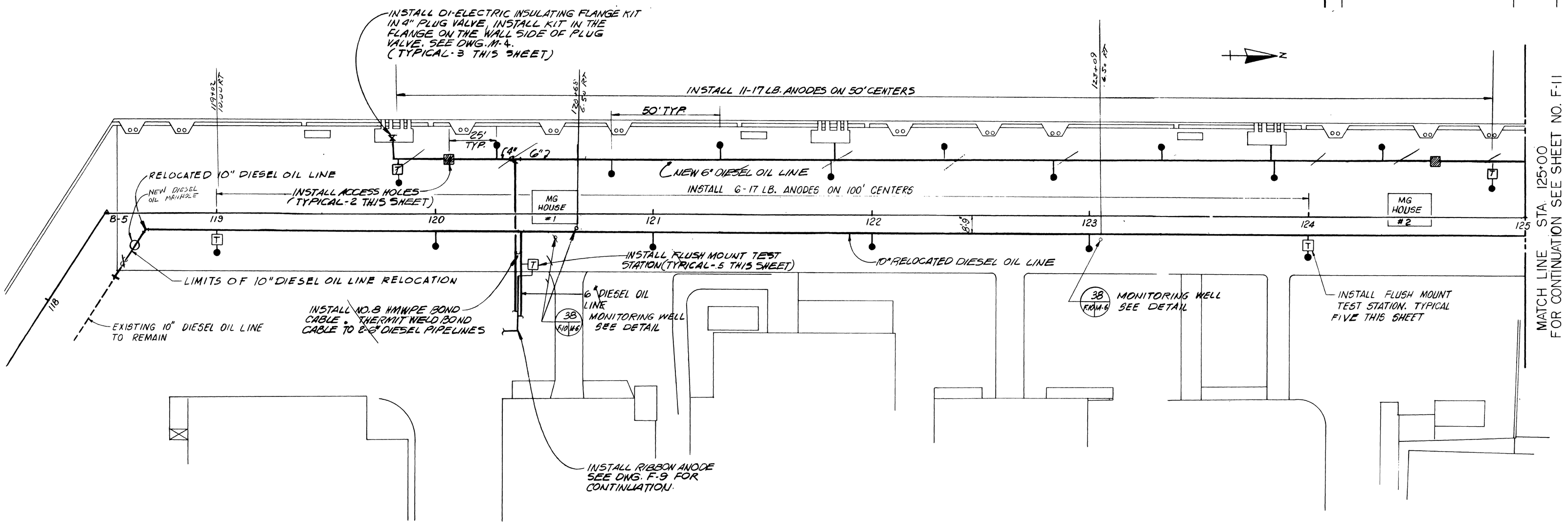

20' 10' 0 20'
SCALE: 1" = 20'

ARCH & ENGR. SEAL

F-10

FOR OFFICIAL USE ONLY

Greiner Engineering Sciences, Inc.
CONSULTING ENGINEERS TAMPA, FLORIDA

DSGN LARREA DR RODRIGUEZ CK LARREA
SUPV WALKER CH ENGR MILITELLO
SUBMITTED BY Sam Militello EOIC DATE 6/20/86
FIRM MGR TITLE
EIC H. Stanmyer BR HD
FPE DIR

APPROVED DATE
OFFICER IN CHARGE
APPROVED DATE
CEC OFFICER COMMANDER NAVFAC 3/16/86

DEPARTMENT OF THE NAVY NAVAL FACILITIES ENGINEERING COMMAND
SOUTHERN DIVISION
CHARLESTON, S C

NAVAL AIR STATION KEY WEST, FLA.

PHM BERTHING WHARF
TRUMAN ANNEX
PIPING RELOCATION AND CATHODIC PROTECTION-SOUTH

SIZE	CODE IDENT NO	NAVFAC DRAWING NO
F	80091	5157672
		CONSTR CONTR NO N62467-85-C-0141
SCALE 1" = 20'		SPEC 06-85-0141 SHEET 42 OF

SOUTHDIV-4-11012-15 (REV. 2-81)

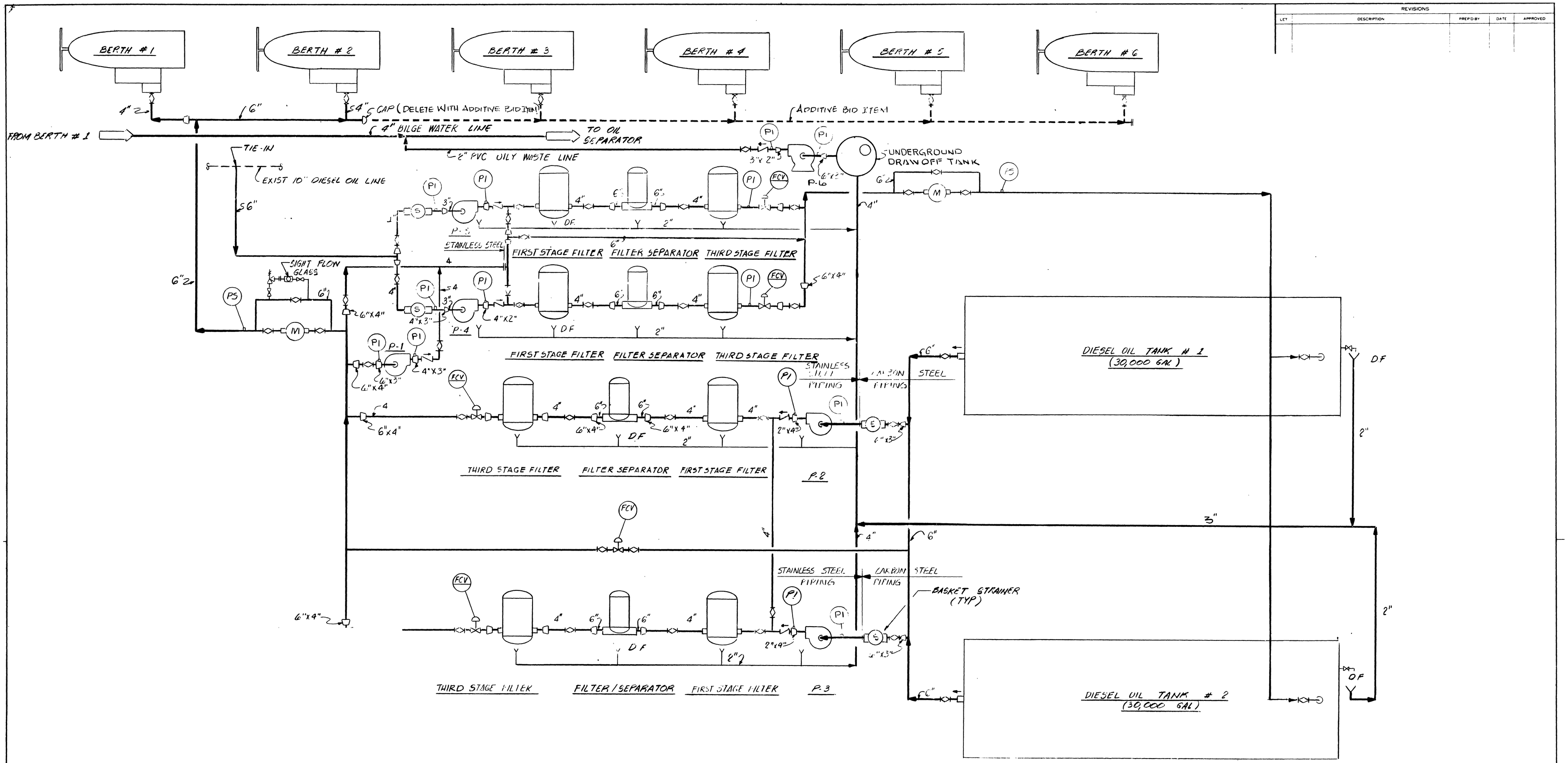

REVISIONS				
LET	DESCRIPTION	PREP'D BY	DATE	APPROVED

FOR OFFICIAL USE ONLY

Greiner Engineering Sciences, Inc.
CONSULTING ENGINEERS TAMPA, FLORIDA

DSGN LARREA CH MARTINEZ CHK LARREA
SUPV WALKER CH ENGR MILITELLO
SUBMITTED BY: S. Militello EVP 6/20/86
FIRM REVIEW (TITLE)
EC E.H. Schmidt DRHD
FPE DIR

ARCH & ENGR SEAL

APPROVED DATE
OFFICER IN CHARGE
APPROVED DATE
CHIEF, CIVIL ENGR 3/16/86
FOR COMMANDER, NAVFAC

F-2

DEPARTMENT OF THE NAVY
NAVAL FACILITIES ENGINEERING COMMAND
SOUTHERN DIVISION
CHARLESTON S.C.

NAVAL AIR STATION KEY WEST, FLA.

PHM BERTHING WHARF
TRUMAN ANNEX
FLOW DIAGRAM

SIZE	CODE IDENT NO	NAVFAC DRAWING NO
F	80091	5157664
		CONSTR CONTR NO N62467-85-C-0141
SCALE NONE		SPEC 06-85-0141 SHEET 34 of

REVISIONS				
LET	DESCRIPTION	PREP'D BY	DATE	APPROVED

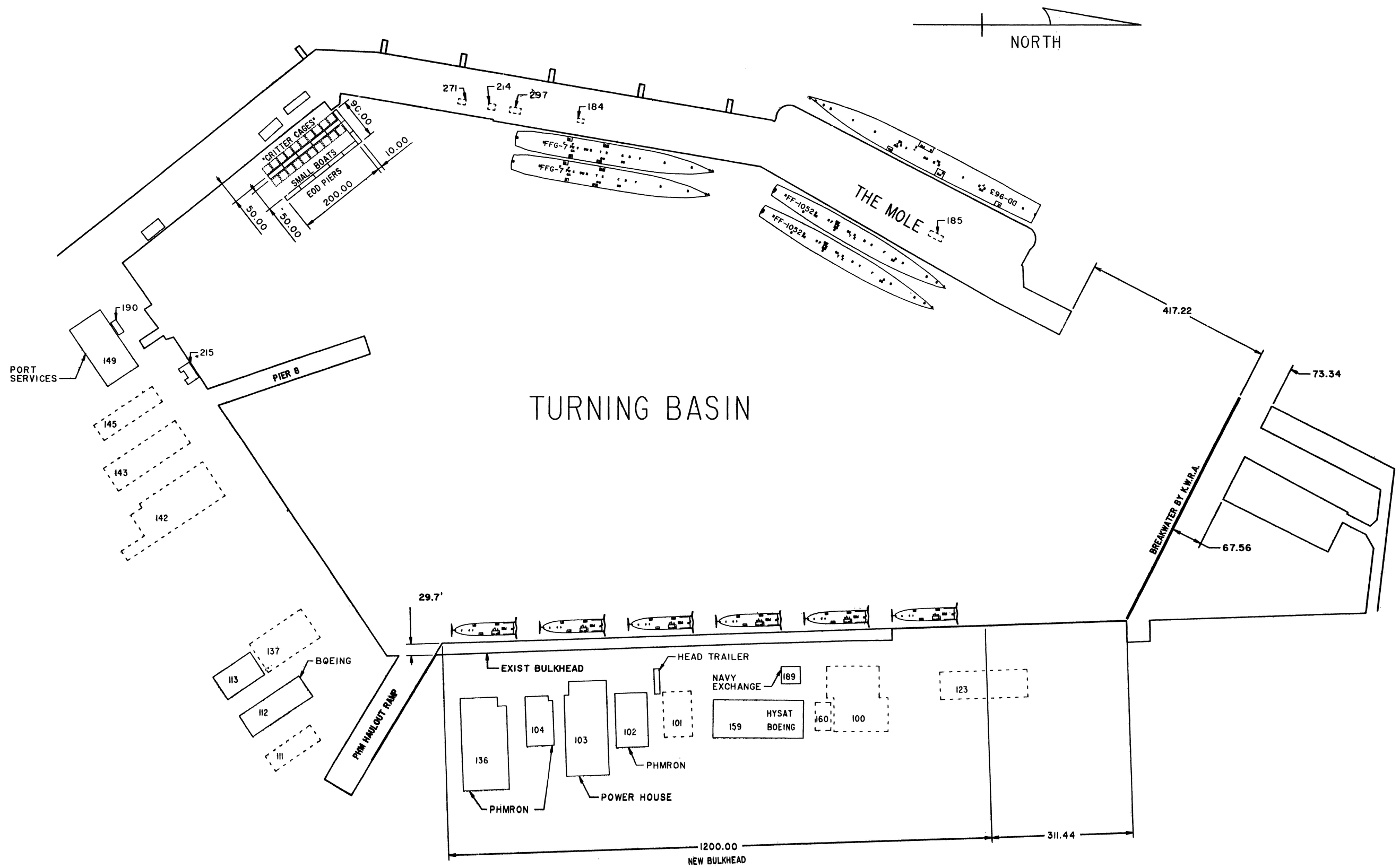

BERTHING PLAN

1" = 100'-0" 100' 0 100' 200' 300'

DESIGNED E.H.STEHMEYER, JR, P.E.	DEPARTMENT OF THE NAVY	NAVAL FACILITIES ENGINEERING COMMAND	
DRAWN BY SOUTHNAVFAC CADDS	SOUTHERN DIVISION CHARLESTON, SC		
CHECKED BY E.H.STEHMEYER, JR, P.E.	NAVAL AIR STATION	KEY WEST FLORIDA	
IN CHARGE T.E.KNISLEY	PHM BERTHING WHARF		
PROJ ENGR / DIRECTOR E.H. Stehmeyer Jr.	TRUMAN ANNEX		
	BERTHING PLAN		
APPROVED / DATE / SIGN FOR COMMANDER, NAVFAC — 9/16/86	SIZE F	CODE IDENT NO. 80091	NAVFAC DRAWING NO. 5157702
S-16	SCALE AS NOTED	SPEC 06-85-0141	CONSTR CONTR NO N62467-85-C-0141
			SHEET 74 OF

REVISIONS				
LET	DESCRIPTION	PREP'D BY	DATE	APPROVED

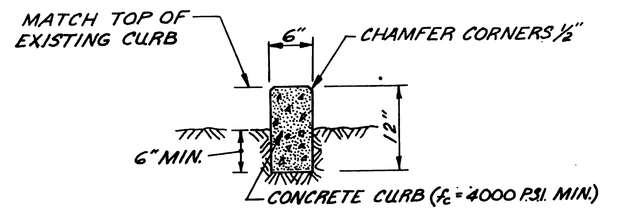

BUILDING 102 PLANTER CURB DETAIL (1 / C-9 C-9)
SCALE: 1" = 1'-0"

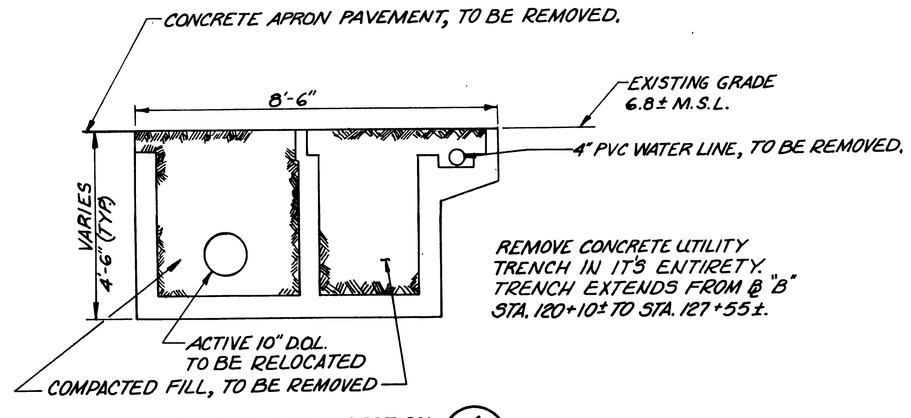

UTILITY TRENCH SECTION (A / C-9)
SCALE: ½" = 1'-0"
C-5, C-6, & C-7

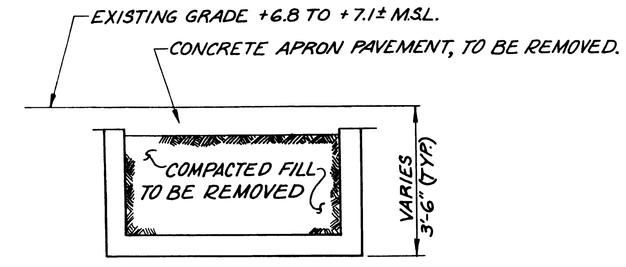

UTILITY TRENCH SECTION (D / C-9)
SCALE: ½" = 1'-0"
C-5, C-6

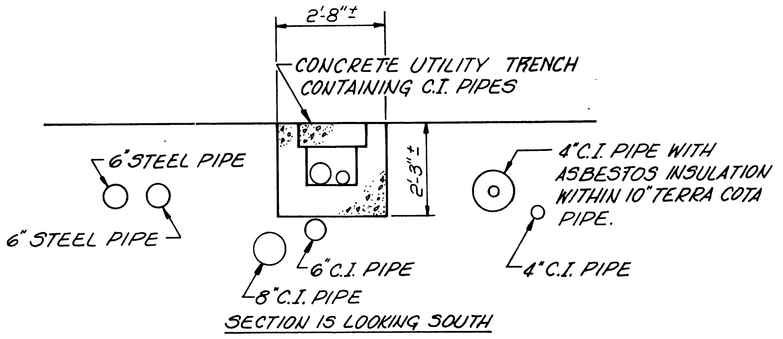

SECTION (E / C-7 C-9)
SCALE: ½" = 1'-0"

THE INFORMATION SHOWN ABOVE HAS BEEN EXTRACTED FROM NAVY DRAWING KW-81 DATED 3/29/52

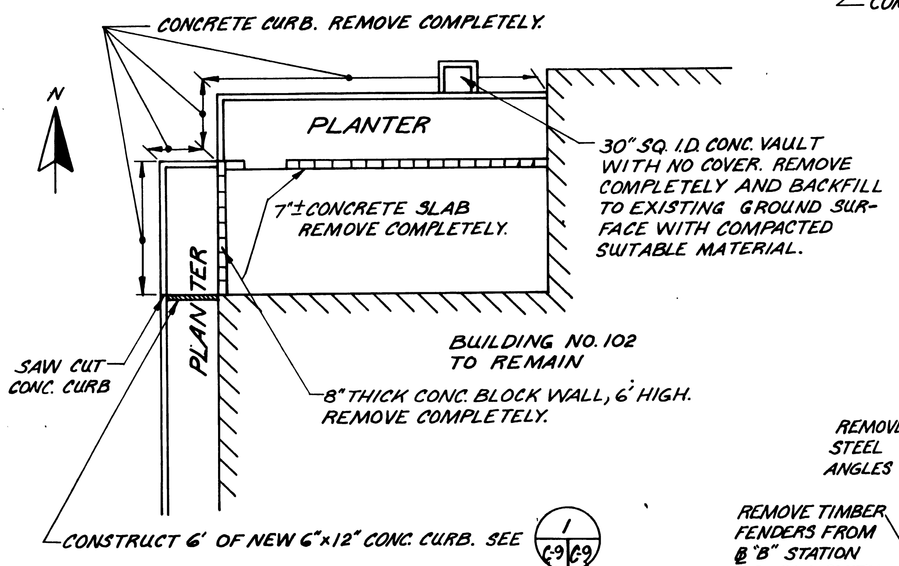

BUILDING 102 AREA DEMOLITION DETAIL (2 / C-9 C-9)
SCALE: 1/16" = 1'-0"

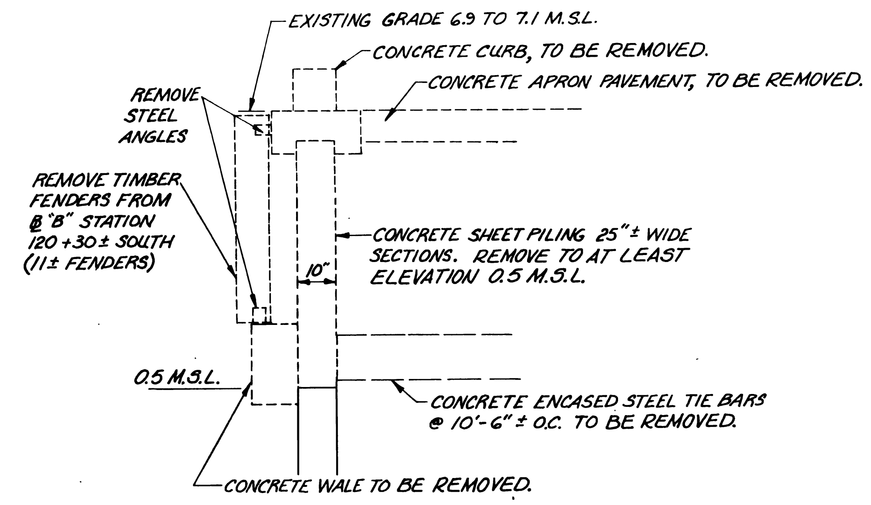

SECTION APPLIES FROM ℄ "B" STATION 128+47 SOUTH.

BULKHEAD DEMOLITION SECTION (B / C-9)
SCALE: ½" = 1'-0"
C-5, C-6

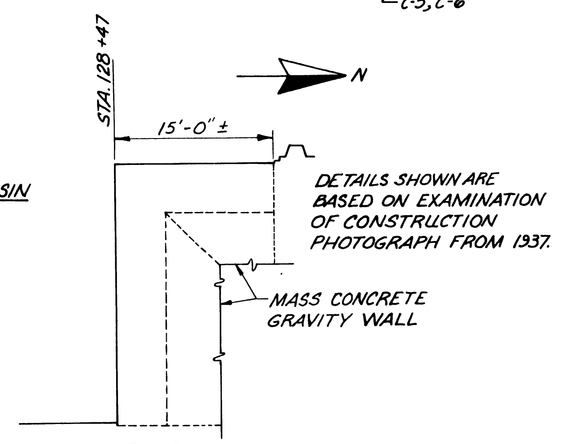

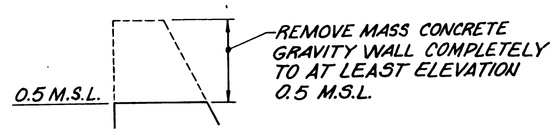

CONCRETE GRAVITY QUAY WALL DETAIL (4 / C-9)
SCALE: 1/8" = 1'-0"
C-6, & C-4

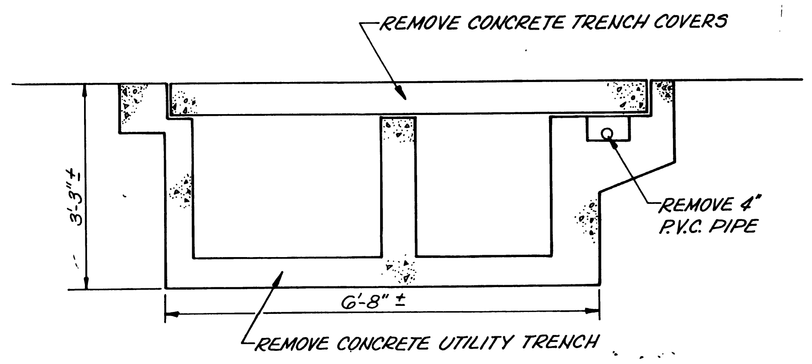

SECTION (F / C-7 C-9)
SCALE: ¾" = 1'-0"

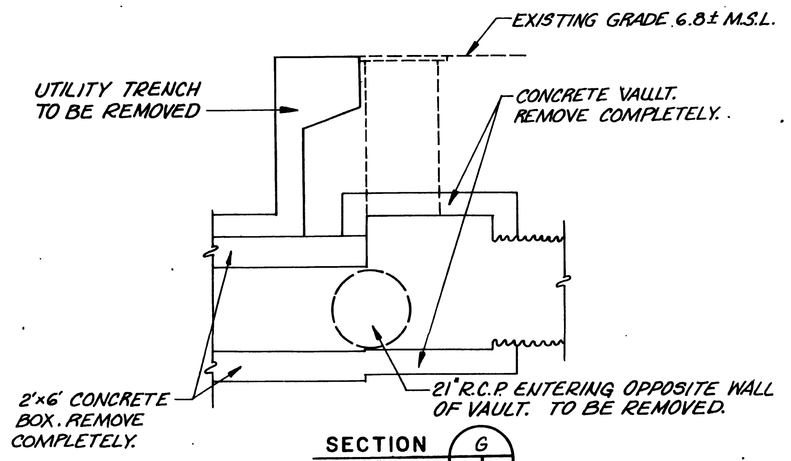

SECTION (G / C-9 C-9)
SCALE: ¼" = 1'-0"

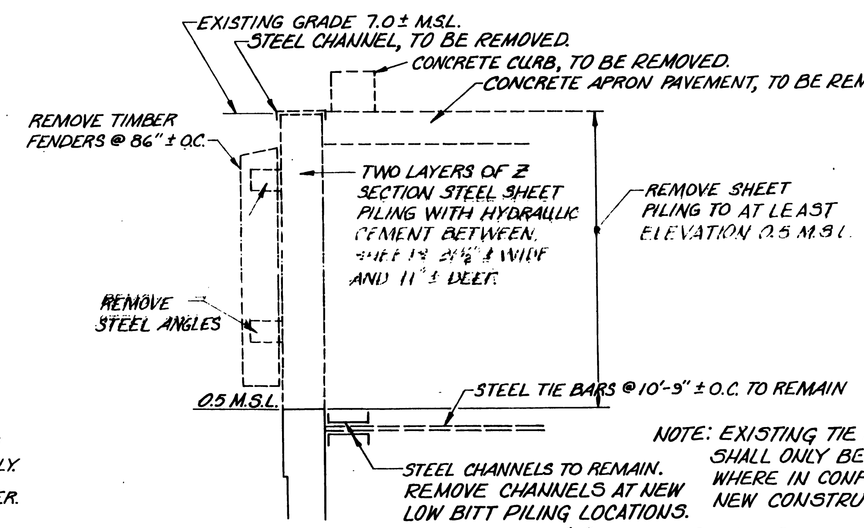

NOTE: EXISTING TIE BAR SYSTEM SHALL ONLY BE REMOVED WHERE IN CONFLICT WITH NEW CONSTRUCTION.

SECTION APPLIES BETWEEN ℄ "B" STATIONS 128+62 AND 130+54

BULKHEAD DEMOLITION SECTION (C / C-6 C-9)
SCALE: ½" = 1'-0"

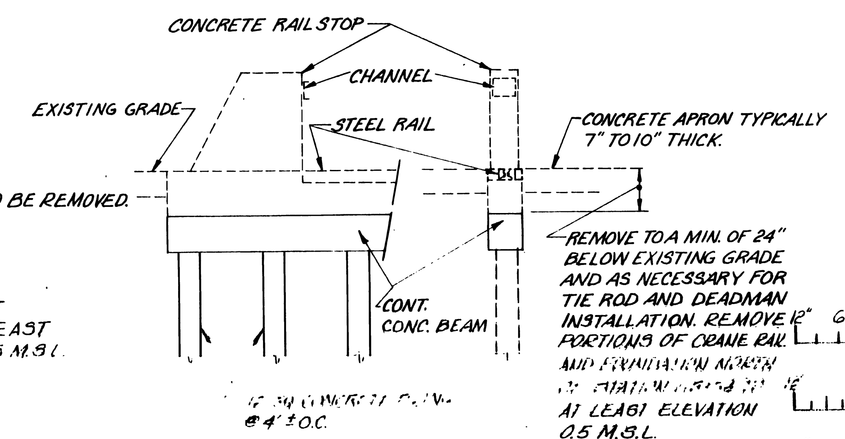

CRANE RAIL DETAIL (5 / C-9)
SCALE: ¼" = 1'-0"
C-4, C-7

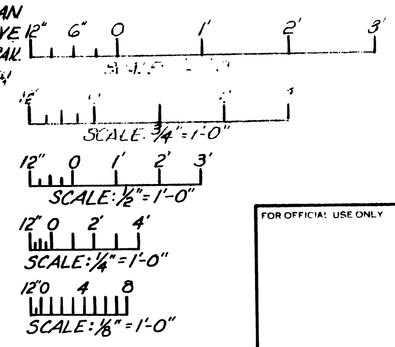

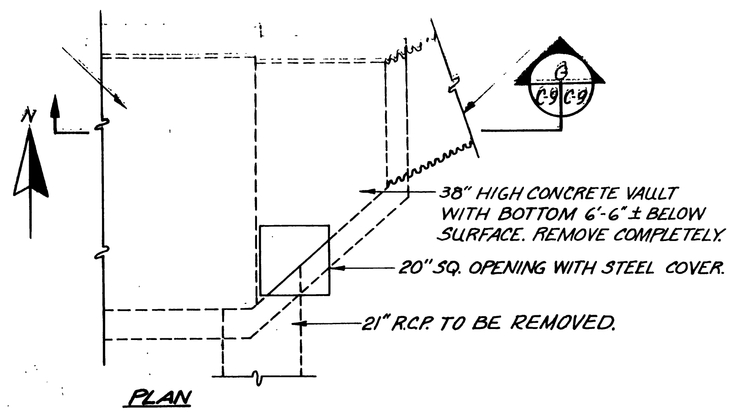

DETAIL (3 / C-7 C-9)
SCALE: ¼" = 1'-0"

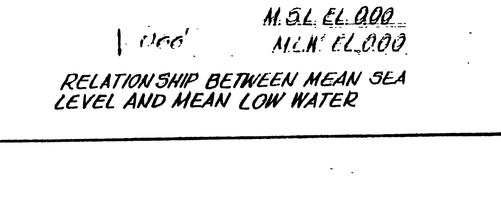

RELATIONSHIP BETWEEN MEAN SEA LEVEL AND MEAN LOW WATER

FOR OFFICIAL USE ONLY

ARCH & ENGR SEAL

C-9

Greiner Engineering Sciences, Inc.
CONSULTING ENGINEERS TAMPA, FLORIDA

DSGN EVANS/WINCKLER/WALKER
SUP WALKER CH ENGR MILITELLO
SUBMITTED BY: S. Militello EVP 6/23/86
FIRM MEMBER (TITLE)
EC G.H. Schwager
FYI ____ DWR ____
APPROVED ____ DATE ____
OFFICER IN CHARGE
APPROVED ____ DATE ____
FOR COMMANDER, NAVFAC P.E. 9/16/86

DEPARTMENT OF THE NAVY — NAVAL FACILITIES ENGINEERING COMMAND
SOUTHERN DIVISION
CHARLESTON, S.C.

NAVAL AIR STATION — KEY WEST, FLA.
PHM BERTHING WHARF
TRUMAN ANNEX
DEMOLITION SECTIONS AND DETAILS

SIZE	CODE IDENT NO	NAVFAC DRAWING NO
F	80091	5157639
SCALE AS NOTED		CONSTR CONTR NO N62467-85-C-0141
		SPEC 06-85-0141 SHEET 9 OF

APPENDIX D

62-713.900 Forms.

The forms used by the Department for soil treatment facilities are adopted and incorporated by reference in this section. The form is listed by rule number, which is also the form number, and with the title, subject and effective date. Copies of forms may be obtained from a local District Office or by writing to the Florida Department of Environmental Protection, Solid Waste Section, MS 4565, 2600 Blair Stone Road, Tallahassee, Florida 32399-2400.

(1) Form 62-713.900(1): Application for Permit to Construct or Operate a Stationary Soil Treatment Facility, effective August 5, 1999.

(2) Form 62-713.900(2): Notification of Intent to Use a General Permit to Construct or Operate a Mobile Soil Treatment Facility, effective August 5, 1999.

(3) Form 62-713.900(3): Soil Testing Reporting Form, effective August 5, 1999.

Specific Authority 403.061, 403.704 FS. Law Implemented 403.0877, 403.707 FS. History–New 8-5-99.

Table A. Minimum Number of Soil Samples Required

Amount of Soil by Volume, yd3	Amount of Soil by Weight, tons	Number of Discrete Samples Required for Volatile Organics	Number of Composite Samples Required for non-Volatile Organics
<100	<140	1	1
100 to <500	140 to <700	3	3
500 to <1000	700 to <1400	5	5
For each additional 500 yd3	For each additional 700 tons	1	1

Table B. Total Metals Analysis and TCLP Test Requirements

If	Exceeds	TCLP Test Criteria
Total Arsenic	100 mg/kg	5.0 mg/L
Total Barium	2000 mg/kg	100.0 mg/L
Total Cadmium	20 mg/kg	1.0 mg/L
Total Chromium	100 mg/kg	5.0 mg/L
Total Lead	100 mg/kg	5.0 mg/L
Total Mercury	4 mg/kg	0.2 mg/L
Total Selenium	20 mg/kg	1.0 mg/L
Total Silver	100 mg/kg	5.0 mg/L

APPENDIX E

TRUMAN WATERFRONT LUC AREA CONSTRUCTION PERMIT

GENERAL INFORMATION:

Requestor:	Location: (Include Bldg Nos. and Streets) Truman Waterfront Park	Date of Request:
Contractor:	Subcontractors:	SWMUs/AOCs Impacted: Parcel C - Former DRMO Parcel K - City Owned portion Parcel E

PROPOSED WORK:

Scope of Work: (Attach sketches, drawings & information outlined in Process to Conduct Construction Activities Document)

LAND USE CONTROLS:

Current Land Use Controls on Construction Area:

	City-owned portion of Parcel K	- Restricted to Allow Recreational Use Only.
	Parcel C: Former Defense Reutilization and Marketing Office Waste Storage Area (DRMO) Parcel	-No LUCs.
	Parcel E1	- Restricted to Allow Recreational Use Only.
	Parcel E2	- Restricted to Allow Recreational Use Only. - Engineering Control in place to prevent exposure to soil beyond two feet below land surface
	Parcel E3	- Restricted to Allow Recreational Use Only. - Engineering Control in place to prevent exposure to soil beyond two feet below land surface

Frequency and Date of Next LUC Inspection for Construction Area:

Potential Effect of Proposed Construction on LUCs:

- Relocation or reuse of contamination impacted soil.
- Alteration to existing and required engineering controls.
-Need to implement provisions specified in Soil and Groundwater Management Plan. This provisions include but are not limited to:
  *Restriction on soil reuse and relocation.
  *Soil storage and disposal protocols.
  *Equipment decontamination.
  *Dust and Sediment control.
  *Tree removal and relocation.
  *Record keeping and notifications.

CERTIFICATIONS:

As a representative of the property owner of the subject property, I hereby certify that: (check all that apply)

- ☐ I possess an updated copy of the LUC Areas Map.
- ☐ I possess an updated copy of the approved Soil and Groundwater Management Plan.
- ☐ I acknowledge that residual contamination exists on the subject property and protocols and provisions described in the Soil and Groundwater Management Plan must be observed and implemented at all times.
- ☐ I acknowledge that residual contamination exists on the subject property and am aware that further information on site contaminants beyond the information provided in the Soil and Groundwater Management Plan can be found in the Administrative Record located at City of Key West City Hall, 3126 Flagler Avenue, Key West, Florida
- ☐ Information regarding areas of concern and contaminants will be provided to all contractors and subcontractors.
- ☐ The proposed construction will not change the land use assigned to each individual parcel.
- ☐ Personnel hazards will be controlled where construction activities have the potential to interfere with existing remedies (i.e. engineering controls).
- ☐ Dewatering will not affect migration of contaminants, and water under groundwater use restriction will be tested and properly disposed in accordance with a Dewatering Permit to be procured from local and state agencies as necessary.
- ☐ Soil excavated within designated LUC areas will be tested and properly disposed of per the provisions included in the Soil and Groundwater Management Plan.
- ☐ Exposure assumptions used in deriving LUCs will not be altered.
- ☐ Soil excavation, stockpiling, relocation/resuse and disposal will be monitored and documented during construction activities.
- ☐ Any previously unknown contamination that is discovered will be reported immediately to the Navy and the City of Key West.

Signature of Requesting Official:	Printed Name and Phone Number:	Date:

Navy Review:

- ☐ Requestor Authorized to Proceed
- ☐ Further Information is Requested
- ☐ Permit Denied

Signature:

_____ Navy RPM/BEC

Date out: _____ Serial No: _____

(Authorization to proceed does not constitute approval of methods by which environmental, safety, and other regulations are satisfied.)

PART 5

REPORT OF GEOTECHNICAL EXPLORATION

REPORT OF
GEOTECHNICAL EXPLORATION

TRUMAN WATERFRONT PARK
WEST OF FORT STREET,
NORTH OF KEY WEST NAVAL BASE
KEY WEST, FLORIDA

FOR

BERMELLO AJAMIL AND PARTNERS, INC.
2601 SOUTH BAYSHORE DRIVE, SUITE 1000
MIAMI, FLORIDA 33133

PREPARED BY

NUTTING ENGINEERS OF FLORIDA, INC.
1310 NEPTUNE DRIVE
BOYNTON BEACH, FLORIDA 33426

ORDER NO: 334.2

JUNE, 2014

Miami Dade County Tier 2 CBE
Palm Beach County SBE
SFWMD SBE
Small Business Administration SBE for Federal Projects

June 6, 2014

Bermello Ajamil & Partners, Inc.
2601 South Bayshore Drive, Suite 1000
Miami, Florida 33133
Attn: Mr. Randy Hollingworth
305-859-2050 Email: RHollingworth@bermelloajamil.com

Re: Report of Geotechnical Exploration
Truman Waterfront Park
West of Fort Street, North of Key West Naval Base
Key West, Florida

Dear Mr. Hollingworth:

Nutting Engineers of Florida, Inc. has performed a geotechnical exploration for the Truman Waterfront Park Project in Key West, Florida. This exploration was performed to obtain information regarding subsurface soil conditions which was used to develop opinions regarding earthwork procedures and foundations for support of the proposed construction. This report presents our findings and recommendations based upon the information examined at the time of this evaluation.

PROJECT INFORMATION

Plans for this project include constructing a pedestrian access bridge across Admirals Cut adjacent to the Westin Marina, a 2,525 square foot police horse stables building, a 3,000 square foot amphitheater with 250 fixed seats and a 24,304 square foot community building as part of the Truman Waterfront Park development. In addition, asphalt paved parking and drive areas will be constructed along with on-site storm water drainage facilities. At this time, structural loading conditions for the structures including the pedestrian bridge were not available and this should be provided to us once the design becomes more finalized.

Final elevations have not been provided, however, in general, it appears that final grades will be within approximately one to two feet of existing grades.

Currently, the area of the proposed buildings/amphitheater is relatively level, vacant land covered by sparse grass and trees with light tan sand and limestone fragments at the surface. There are also some asphalt paved areas within the project site.
NE should be notified in writing by the client of any changes in the proposed construction along with a request to amend our foundation analysis and/or recommendations within this report as appropriate.

GENERAL SUBSURFACE CONDITIONS

Soil Survey Maps

As part of the geotechnical exploration, we have reviewed available Soil Conservation Service (SCS) survey maps for Monroe County. These SCS maps provide qualitative information about potential general shallow soil conditions in the project vicinity. This information was derived from approximately 6 ft. deep manual auger borings, aerial photo and surface feature interpretation at some point in the past (mid 1980's to early 1970's). The SCS data may or may not reflect actual current site conditions. As indicated in the Monroe County Soil Survey Map the series under exploration is Urban land. The Urban land consists of unconsolidated or heterogeneous overburden material generally consisting of crushed coralline limestone and coarse sand used for land leveling as fill. Beneath the fill layer natural silt deposits may exist or the natural limestone formation. We note that the maximum depth of the survey is approximately six feet.

Subsurface Exploration

NUTTING ENGINEERS OF FLORIDA, INC. performed a total of nine Standard Penetration Test (SPT) borings (ASTM D-1586) to depths of fifteen to sixty feet below land surface. Eight borings were performed for the proposed buildings/amphitheater, and one boring was performed for the proposed pedestrian bridge. We note that two borings were proposed for the pedestrian bridge, however, due to accessibility limitations, only one boring could be performed at this time. In addition, two double ring infiltration tests and one exfiltration test was performed for site drainage information. In addition, two cores were taken of the concrete walkway adjacent to the existing seawall for thickness determination.

The location of the test borings, concrete cores and infiltration/exfiltration tests are indicated on the Boring Location Plan (Figure 1) presented in the Appendix of this report. The boring locations were identified in the field using approximate methods; namely, a measuring wheel and available surface controls. As such the soil boring locations should be considered to be approximate.

Concrete Walkway Core Results

As part of the geotechnical exploration, two concrete cores were taken in the walkway adjacent to the existing seawall to provide thickness measurements. The results of the cores revealed a

concrete thickness of 8 inches and 10 inches for Cores No. 1 and 2, respectively. The total length of the walkway is approximately 1500 feet long and the northern 300 feet of the walkway changes from concrete to asphalt. We note that the boring performed on the north end of the property revealed approximately two inches of asphalt.

Test Boring Results

In general, the borings within the buildings/amphitheater revealed approximately three to four feet of medium dense to dense tan silty sand and limestone fragments (fill material) underlain by a soft to very soft light tan silt/marl to a depth of about six feet. Alternating layers of tan to brown sand and medium to hard porous tan limestone with sand lenses was then encountered to a depth of twenty-five feet. At the pedestrian bridge area, the silt layer was encountered from approximately fifteen to twenty-five feet, underlain by tan cemented sand and coralline limestone to sixty feet, the maximum depth explored. Please see the enclosed soil classification sheet in the Appendix of this report for additional important information regarding these descriptions, the field evaluation and other related information.

It is possible that the sandstone/limestone formation encountered may extend to greater depths and be present in areas other than recorded in the test boring. Generally, rock in the Monroe County area may include limestone or sandstone which have irregularities and discontinuities including vertical and horizontal solution features, varying surface and bottom elevations, and varying degrees of hardness. The rock features may also contain intervening sand and other material filled lenses.

Laboratory Testing and Analysis

Representative soil samples were collected during the fieldwork and returned to the laboratory for testing. Specifically, natural water content tests and minus 200 sieve tests were performed on the soft to very soft silt/marl material encountered in borings B-2 to B-5 and B-8 from approximately three to six feet. The natural water content was determined to range from 38 to 57 percent. The minus 200 sieve tests revealed 82 to 96 percent of the soils passed the No. 200 sieve. This indicates that the soils are moderately compressible. A table of the results is presented below.

Boring No. and Depth	Moisture Content	Material Passing the No. 200 Sieve
B-2, 4-6	38.2	82.6
B-3, 4-6	61.5	90.4
B-4, 4-6	57.1	91.6
B-5, 2-4	54.4	85.4
B-8, 4-6	56.0	96.3

Infiltration Test Results

As part of the study for this project, two double ring infiltration tests were performed in general accordance with ASTM D3385 specifications. The results of the testing indicated an infiltration rate ranging from 4.08 to 7.35 inches per hour. Please refer to the individual test Reports presented in the Appendix for specific information.

Exfiltration Test Results

One 'Usual Open-Hole' exfiltration test was performed in general accordance with South Florida Water Management District (SFWMD) specifications to a depth of fifteen feet below the existing ground surface. The test was performed in order to determine the hydraulic conductivity of the in situ subsurface soils to evaluate drainage requirements for the project. The hydraulic conductivity value at the location tested was determined be approximately 5.15×10^{-4} cubic feet per second, per square foot, per foot of head. Detailed soil descriptions and flow rates are presented in the Appendix.

Groundwater Information

The immediate groundwater level was measured at the boring locations at the time of drilling. The groundwater level was encountered at depths of approximately six to nine feet below the existing ground surface.

The immediate depth to groundwater measurements presented in this report will not provide a reliable indication of stabilized or more long term depth to groundwater at this site. Water table elevations can vary dramatically with time through rainfall, droughts, storm events, flood control activities, tidal activity, pumping and many other factors. For these reasons, this immediate depth to water data should not be relied upon alone for project design considerations.

Further information regarding stabilized groundwater elevations at the site could be developed upon specific request. Additional evaluation might include installation and monitoring of piezometers, documenting tidal activity, flood control canals and other surface water bodies.

ANALYSIS AND RECOMMENDATIONS

The borings performed within the proposed buildings and amphitheater generally revealed a surficial sand and limestone fill material in the upper three to four feet underlain by a silt/marl stratum to depths of approximately six feet. Below the silt stratum the natural limestone formation was encountered. Due to the compressible silt/marl encountered at depths of approximately three to six feet, construction of the proposed structures over the existing soil profile would result in excessive settlements. Therefore, in order to support the structures using a shallow foundation system with a design bearing pressure of 2,500 pounds per square foot, we

recommend that the silt be excavated and removed from the building areas and replaced with well compacted structural fill. The boring performed in the area of the pedestrian bridge encountered compressible silt at depths ranging from approximately fifteen to twenty-five feet, therefore, we recommend that the pedestrian bridge be supported on a pile foundation system.

In accordance with Monroe County Ordinances, specifically section 122 – Floodplain Management, if the buildings are located within an area covered by this Ordinance, deep foundation systems will be required. We have included the specific section of the Code for reference:

In accordance with Monroe County Ordinance Section 122-3 C: All building foundations shall rest directly on natural rock, on concrete piling driven to rock or on friction piling (concrete or wood) and shall be anchored to such rock support by holes, 16 inches in minimum diameter, augured into such rock a minimum depth of three feet and reinforced by a minimum of four #5 vertical rods extending up into the piers above a minimum of 18 inches and tied to the vertical steel of the pier. Wooden pilings shall be locked into 16-inch auger foundations by at least a #5 rebar extending through the piling and three to five inches beyond.

We were not provided information concerning whether this Ordinance applies to the proposed buildings. Therefore, we should be informed to provide additional input if this portion of the Code applies.

Site Preparation – Shallow Foundations

The surficial organic soils, debris from the clearing operations, asphalt, and any unsuitable soils as determined by the Geotechnical Engineer will need to be completely removed within the construction area and to a lateral distance of at least 5 feet beyond the footprint limits, where practical. A Nutting Engineer's representative should be present to observe that the stripping operations are performed as we have discussed herein.

We note that demucking operations are contractor and site conditions dependent and that the total amount of material removed may depend on the operator's ability to effectively remove the soils without over-excavation. It will be very important that Nutting Engineers monitor these operations in order to ensure that the operator does not over excavate and possibly remove more material which does not require removal. This will save on costs and avoid the potential for confusion.

Once the construction area has been cleared, and upon approval by the geotechnical engineer, the organic soils shall then be excavated and removed from the site. Based on the soil borings, we anticipate the silt/marl soils will be encountered at depths beginning at approximately three to four feet and ending at a depth of approximately six feet although variation should be expected.

The soils above this stratum can be stockpiled and used as backfill. A representative of Nutting Engineers must observe the operation on a full time basis to ensure that the engineering intent has been accomplished.
The level of the water table at the time of the test boring was about six feet below the existing ground surface. Therefore we anticipate that the excavation may fall just at or above/below the water table. We note that the water table may fluctuate due to tidal fluctuations, rainfall and other site factors. Based on the depth of the silt soils it is anticipated that dewatering operations will not be performed and the recommendations provided below reflect that condition. If dewatering is needed, our office should be notified in order to evaluate our recommendations and determine if alternative recommendations should be provided.

If dewatering is not performed, once the organic soils have been removed, fill placed below the natural groundwater level shall consist of clean sand and limestone having a Limerock Bearing Ratio (LBR) of at least 60. The fill material shall have no more than 10 percent passing the No. 200 sieve, with a maximum particle size of 3 inches. The fill may be placed in a loose state until reaching no more than two feet above the natural groundwater level.

Once the site is two feet above the water table the soils should be compacted with at least ten passes of a small self propelled vibratory roller with a minimum dynamic force of 10 tons. Also, the surface should be compacted until a density equivalent to at least 98 percent of the modified Proctor maximum dry density (ASTM D-1557) is achieved to a depth of at least 12 inches below the compacted surface.

Fill then placed above the proof rolled surface, and is at least two feet above the water table, may then consist of clean granular soils, free of debris and organics, and shall have no more than 10 percent passing the No. 200 sieve, with a maximum particle size of 3 inches. The fill should be placed in lifts not exceeding 12 inches in loose thickness when using the vibratory compaction equipment described previously. Each lift should be thoroughly compacted until densities equivalent to at least 98 percent of the modified Proctor maximum dry density are uniformly obtained.

The fill should have ASTM designation (D-2487) of GP, GW, SP, or SW, with a maximum particle size of no more than 3 inches or as otherwise approved by Nutting Engineers.

Following site and building pad construction as discussed above, the foundation area should be excavated and the footings formed.

The bottom of foundation excavations should be compacted after excavation to develop a minimum density requirement of 95 percent of the maximum modified Proctor dry density, for a minimum depth of two (2) feet below the bottom of the footing depth, as determined by field density compaction tests. The floor slab area should also be compacted in the same manner.

Pedestrian Bridge

The pedestrian bridge is currently in the conceptual design phase at this time, therefore, structural loading conditions including compression, tension and lateral forces are not available. Due to the compressible silt encountered at depths of about fifteen to twenty-five feet, it is our recommendation that a pile foundation system be used to support the bridge. We anticipate that a compressive capacity of approximately 35 tons would be needed to provide an efficient foundation system. Once the design is more finalized, we should be informed to provide additional analyses and recommendations if needed.

The results of our pile capacity analysis indicate that a 14-inch diameter augercast pile installed to depths of approximately thirty-five feet below the existing ground surface should provide an allowable compressive capacity of 35 tons. The actual depths should be expected to vary depending on the drilling conditions encountered during installation of these piles. Due to the soil conditions encountered at this site (silt stratum and porous limestone), we anticipate large grout takes in order to construct the cast-in-place piles. If compressive capacities other than 35 tons are needed, we should be notified so that we may provide the capacity analysis based on the revised loading information.

The Florida Building Code (FBC) requires that any piles designed for greater than 40 tons should be load tested in order to verify the pile capacity. Therefore, a pile load test will not be required for this project as described in the FBC.

Based on initial drilling conditions during pile installation, final criteria for the remainder of the production piles will be provided. The installation of all piles should be under the full time observation of a representative of the Geotechnical Engineer. We recommend that at a minimum, one full length #6 reinforcing steel bar utilizing centralizers be installed in each pile in order to verify that a pile of continuous cross section is constructed. Additional reinforcing may be required depending on the structural engineers requirements.

It has been noted that due to the hard to very hard coralline limestone formation that exists abundantly within the Florida Keys piling contractors have been known to have extreme difficulty drilling to the recommended pile tip elevation. It is important that specialty contractors familiar with installing augercast piles in the project vicinity be utilized for the pile installation phase of this project.

Pile Observations

We recommend that at least two production piles be installed in the presence of the Nutting project geotechnical engineer. Final pile installation criteria will be provided at that time. It is important that the installation of all piles be under the full time observation of a representative of Nutting Engineers to verify the piles are installed in accordance with our recommendations and good standard practice.

Pile Reinforcement

We recommend that at a minimum, one full length #6 reinforcing steel bar utilizing centralizers be installed. Additional reinforcing may be required depending on the structural engineer's requirements.

Earth Pressures on Walls

Estimated design geotechnical soil parameters were developed from the results of the test borings. The following table summarizes our recommendations for the soil parameters and the lateral active and passive pressure coefficients to be utilized for construction. The design shall include hydrostatic pressure acting behind the wall at the highest anticipated water level during construction, and/or design life of the structure.

SUMMARY OF DESIGN GEOTECHNICAL PARAMETERS – BUILDING AREAS

APP. DEPTH (FEET)	SOIL TYPE	SOIL UNIT WEIGHT (PCF)		ANGLE OF INTERNAL FRICTION (DEGREES)	EARTH PRESSURE COEFFICIENT	
		SATURATED	SUB-MERGED		ACTIVE (Ka)	PASSIVE (Kp)
0-4	Sand and Limestone	135	73	40	0.22	4.6
4-6	Silt/Marl	85	23	10	0.70	1.4
6-25	Porous Limestone	135	73	42	0.20	5.04

Appropriate factors of safety will be needed depending on the application.

Backfill behind walls should be approved granular fill as indicated previously and should be placed in loose lifts not exceeding 12 inches in thickness and should be compacted to minimum dry density of between 92 percent and 95 percent of the maximum modified Proctor dry density using small vibratory compaction equipment. Over compaction in these areas should be avoided. The walls should be temporarily braced during compaction to prevent overstressing of the walls.

Prior to initiating compaction operations, representative samples of the structural fill material to be used and acceptable in-place soils should be collected and tested to determine their compaction and classification characteristics. The maximum dry density, optimum moisture content, gradation and plasticity characteristics should be determined. These tests are needed for compaction quality control of the structural fill and existing soils, and to determine if the fill material is acceptable.

Excavation Requirements

Excavations of five feet or more in depth should be sloped or shored in accordance with OSHA and State of Florida requirements. Materials removed from any excavation should not be stockpiled immediately adjacent to the open excavation as this load may cause a sudden collapse of the sidewalls.

In October of 1989, as published in the Federal Registrar, Volume 54, No. 209, the United States Department of Labor, Occupational Safety and Health Administration (OSHA) amended its; "Construction Standards for excavations, 29CRF part 1926, subpart P". It is mandated by this federal regulation that all excavations, whether they be utility trenches, basement excavation or footing excavations, be constructed in accordance with the new OSHA guidelines. The contractor is solely responsible for designing and constructing stable, temporary excavations and should shore, slope, or bench the sides of the excavations as required to maintain stability of both the excavation sides and bottom.

Pavement Areas

The results of the soil borings indicate that the silty debris zone may exist within the new parking and roadway areas. Based on the relative loads for the parking lot, it is our opinion that it is not necessary to excavate these silt/marl soils and replace them with clean backfill. We note that some increased frequency of maintenance should be anticipated if the silt soils are left in place. The decision as to what should be done within the parking areas will depend on costs, tolerance to settlements, additional fill that may be required and other factors. Discussions should be held with us, the owners and other interested parties to determine the best alternative concerning the pavement areas.

If the existing silt material is to remain, pavement areas after site clearing should be compacted to a minimum of 98 percent of the modified Proctor maximum dry density to a depth of at least 12 inches below the subgrade level. We recommend that stabilized subgrade having a minimum Limerock Bearing Ratio (LBR) of 40 be placed to a depth of approximately one foot below the base course. The base course will range from approximately 6 to 8 inches, and should have a minimum LBR of 100. It appears that the existing soil material in the upper two feet may be used for the pavement sections, however appropriate tests of the material will be needed prior to approval. The project civil engineer should also provide input concerning the pavement areas as they will prepare the project pavement and drainage plans.

GENERAL INFORMATION

The contents of this report are for the exclusive use of the client, the client's design & construction team and governmental authorities for this specific project exclusively. Information conveyed in this report shall not be used or relied upon by other parties or for other projects without the expressed written consent of NUTTING ENGINEERS OF FLORIDA, INC. This report discusses geotechnical considerations for this site based upon observed conditions and our

understanding of proposed construction for foundation support. Environmental issues including, but not limited to, soil and/or groundwater contamination are beyond our scope of service for this project.

If conditions are encountered which are not consistent with the findings presented in this report, or if proposed construction is moved from the location investigated, this office shall be notified immediately so that the condition or change can be evaluated and appropriate action taken.

The vibratory compaction equipment may cause vibrations that could be felt by persons within nearby buildings and could potentially induce structural settlements. Additionally, preexisting settlements may exist within these structures that could be construed to have been caused or worsened by the proposed vibratory compaction after the fact. Pre- and post conditions surveys of these structures along with the vibration monitoring during vibratory compaction could be performed to better evaluate this concern. The contractor should exercise due care during the performance of the vibratory compaction work with due consideration of potential impacts on existing structures. If potential vibrations and impacts are not considered tolerable, then alternate foundation modification techniques should be considered.

The Geotechnical Engineer warrants that the findings, recommendations, specifications, or professional advice contained herein, have been presented after being prepared in accordance with general accepted professional practice in the field of foundation engineering, soil mechanics and engineering geology. No other warranties are implied or expressed.

We appreciate the opportunity to be of service on this project. If we can be of any further assistance, or if you need additional information, please contact us at your convenience.

Sincerely,
NUTTING ENGINEERS OF FLORIDA, INC.

Christopher E. Gworek, P.E
Senior Engineer

Richard C. Wohlfarth, P.E. #50858
Principal/Director of Engineering

Attachments: Boring, Infiltration and Exfiltration Test Location Plan
Test Boring Reports
Infiltration Test Results
Exfiltration Test Results
Soil Classification Criteria
Limitations of Liability

Rep Bermello Ajamil Truman Waterfront Park Geo