100% Drainage Design Report

RECONSTRUCTION OF SOUTH ROOSEVELT BLVD. - SR A1A

Prepared by:
BCC Engineering, Inc.
7300 N. Kendall Drive, Suite 400
Miami Florida 33156

Prepared for:

FDOT
District VI

December 2015

DRAINAGE DESIGN REPORT

FOR THE RECONSTRUCTION OF SOUTH ROOSEVELT BLVD./SR-A1A FROM MP. 0.000 TO MP. 0.977

MONROE COUNTY, FLORIDA

Financial Project Number: 250548-4-52-1

Prepared For:

Florida Department of Transportation
District Six

Prepared By:

BCC Engineering, Inc.

7300 North Kendall Drive, Suite 400
Miami, Florida 33156

December 2015

TABLE OF CONTENTS

1 GENERAL INFORMATION 1-1
1.1 Project Location 1-1
1.2 Purpose 1-1
1.3 Existing Drainage Patterns 1-1
1.4 Tailwater 1-2
1.5 Floodplain Impacts and Mitigation 1-2
1.6 Rules and Regulations/Regulatory Agency Coordination 1-3
1.6.1 Water Quality 1-3
1.6.2 Water Quantity 1-3
1.6.3 Project Specific Drainage Criteria 1-3
2 PRE-DEVELOPMENT ANALYSIS 2-1
2.1 Water Quality 2-1
3 POST-DEVELOPMENT ANALYSIS 3-1
3.1 Proposed Drainage System 3-1
3.2 Water Quality: 3-2
3.3 Water Quantity 3-3
4 ON-SITE CONVEYANCE ANALYSIS 4-1
4.1 Spread Analysis Calculations 4-1
4.2 Inlet Capacity Calculations 4-1
5 MOT DRAINAGE 5-1
6 OPTIONAL PIPE MATERIAL 6-1
7 RESULTS 7-1

Appendices:

Appendix 1 – Figures and Design Aids
Appendix 2 – Drainage Maps
Appendix 3 – Water Quality Calculations
Appendix 4 – Spread Calculations
Appendix 5 – Storm Sewer Tabulations
Appendix 6 – Optional Pipe Material Calculations
Appendix 7 – Correspondence
Appendix 8 – Temporary Drainage/Maintenance of Traffic

1 GENERAL INFORMATION

South Roosevelt Blvd./State Road A1A (the Project) is the southernmost state-designated highway of the United States. It directly fronts the Atlantic Ocean on the south, hotels/apartments to the north, and is designated the Atlantic 1 Alternate (A1A) Scenic and Historic Coastal Highway. The project involves the reconstruction from Station 10+72.01 to Station 52+38.49. The proposed Typical Section includes a total of four travel lanes, curb and gutter along both the north and south side of the corridor, a 16-foot promenade on the south side and an 8 foot parking lane along the south side of the road. Please refer to the proposed Typical Section included in **Appendix 1**.

1.1 Project Location

The Project is located within the City of Key West in Monroe County, Florida. The site commonly experiences a moist warm temperatures with salt water intrusion and an occasional tidal event from tropical storm events. Please refer to **Appendix 1** for the Project Location Map.

1.2 Purpose

The purpose of this report is to provide all the relevant information that has been used in the development of the proposed drainage system. This report is essentially self-contained and provides all the necessary information and calculations that have been performed during the design phase of the drainage system of South Roosevelt Blvd.

1.3 Existing Drainage Patterns

The existing improvements along the South Roosevelt Blvd. right-of-way include an asphaltic-paved four-lane undivided roadway, adjacent sidewalks, and portions of parallel parking provided along the south side of the Project. The north sidewalk ceases to advance past Station 25+30 and a non-continuous curb is provided in some segments of the road in the north and south side of the corridor. The north side of the road consists of a grassed area adjacent to the hotel chains in some cases forming very shallow swales behind the existing curb. There are no existing curb inlets along this section of South Roosevelt Blvd. Runoff from the existing road simply sheet flows into adjacent green areas along the north side. Along the southern promenade the runoff flows towards depressed areas containing drainage inlets. Once collected, the runoff volume passes through two different chambers within the inlet box before discharging through a deep injection well. Runoff from the existing roadway does not appear to flow toward the ocean; this is a closed system with no overflow up through the 25-year, 10-day rainfall reaching the ocean. Existing overflows into the Atlantic Ocean were identified in the vicinity of the project; however, these are located outside the right-of-way limits and are intended to collect runoff from the northern-adjacent private parking lots. These are part of a system independent of that for the South Roosevelt Blvd. and will not be impacted as part of this project. Please refer to **Figure 1** below.

Figure 1 – Existing Conditions

1.4 Tailwater

Tailwater for the purpose of this project will be the ground water where the gravity injection well will discharge to. Because of the proximity of this project to the coastal line, the tailwater is tidal influenced. As a result of coordination with the Florida Department of Transportation (FDOT) District 6, it was determined that the tailwater to be used for the design of the deep injection wells should be the oceans average of the Mean High Water (MHW) and the Mean Tide Level (MTL). This parameter was used for both the existing and proposed deep injection wells within the project limits. The MHW and MTL elevation were obtained from the National Oceanic and Administration Services (NOAA) for Station ID 8724580 located in Key West. The MHW elevation was determined to be at 1.10 feet (NGVD 29), -0.24 feet (NAVD 88), while the MTL was determined to be at 0.46 feet (NGVD 29). The average of this two yielded an elevation of 0.78 feet which was rounded up to 0.80 feet (NGVD 29), -0.54 feet (NAVD 88). Please refer to **Appendix 1** for tidal elevation data.

1.5 Floodplain Impacts and Mitigation

The project is located within a floodplain according to the following FEMA Maps:

- FEMA Map No. 12087C1517 K Revised February 18, 2005

The floodplain classification for this project is "Zone VE" meaning coastal flood zone with velocity hazard (wave action); base flood elevations are determined at elevation 11' NGVD. Please refer to the FEMA map listed above located in Appendix 1 of this report.

It is not a requirement for this project to provide any compensation for encroachment into flood plane areas.

1.6 Rules and Regulations/Regulatory Agency Coordination

After coordinating with SFWMD it was determined that a separate permit is not required for this project. Instead the permit for the South Roosevelt Blvd. section to the north of this project will be modified to include the drainage improvements within this project.

1.6.1 Water Quality

Because this project will not be increasing any impervious areas from the existing condition it was determined, after coordinating with South Florida Water Management District (SFWMD), that it can be classified as a "retrofit". As a result of this and given that the project will improve the existing water quality conditions it is not required to comply with SFWMD requirements for the additional 50% water quality volume required when discharging into Outstanding Florida Waters (OFW). Please refer to meeting minutes included in **Appendix 7** of this report.

1.6.2 Water Quantity

Since there are not any discharges into the Atlantic Ocean or any other water surfaces either directly or as an overflow for the drainage system being proposed, there is no need to conduct a Pre- vs. Post-development analysis. This is also given that the existing system will remain in place and will only be improved upon with the provision of additional deep injection wells. Essentially the drainage system has been designed to be self contained and will not need to overflow any runoff into the ocean.

1.6.3 Project Specific Drainage Criteria

The following is the project specific criteria used for the design of the drainage system as documented on this report. This criteria is the result of coordination meeting with various agencies during the design phase of the project.

1. Given the location of the project FDOT has requested that the drainage system be analyzed for the following storms
    a. 10 Year – 1 Hour
    b. 10 Year – 8 Hour
    c. 10 Year – 24 Hour
    d. 25 Year – 72 – Hour (Requested by SFWMD)
2. Tailwater to be used for the analysis of deep wells is the average of the MHW level and the MTL.
3. Due to the low elevation of the road and the difficulty to raise the profile in a significant way, the criteria used for the sizing of the drainage system is to maintain at least one-lane open to traffic during anyone of the storm events used in the design (see above).
4. A 10 year storm with a duration of 1hr, 8hrs and 24 hrs. Under the 10 Year storm events being modeled at least one 11 foot lane at the center of the roadway must remain clear.

5. The well capacity for the purpose of this analysis is 850 GPM/ft. of head. Existing deep injection wells will be analyzed assuming half of the capacity of the proposed wells.
6. Assume 1.5 feet of head losses at the deep injection wells due to the differences in specific gravity between salt water and fresh water.

2 PRE-DEVELOPMENT ANALYSIS

The drainage system currently in place for South Roosevelt Blvd within the project limits consists of five (5) deep injection well structures consisting of a triple chamber box located along the south side of the street within the promenade. The chamber boxes are stand alone and are not connecting to any other drainage inlets or pipes in the area. The wells have only one catch basin located directly on top of on the back of sidewalk/promenade right against the existing gravity wall. The drainage inlet is located within a depressed section of the promenade, which collects the runoff from the existing travel lanes. There is essentially no treatment provided for runoff before it enters the well chamber. Please refer to **Figure 2** below. Field visits do not indicate the existence of any major off-site areas draining into the FDOT Right-of-Way.

Figure 2 – Existing Drainage Well and Inlet

The existing drainage system can be better described as a hybrid system as it consists of a mix of elements characteristics of both, open and closed systems. Runoff along some segments of the north side of the road simply sheet flows into grassed areas while in the south side of the road it is more typical to have the runoff conveyed to catch basin capturing the water and discharging it into a deep injection well. Using the number of existing wells within the project limits it can be said that the existing drainage configuration is divided into five (5) separate systems by point of discharge. Along the north side of the road there are not any existing inlets and therefore where there is an existing curb runoff is potentially discharge to offsite areas through existing driveways.

2.1 Water Quality

There is no evidence of any water quality pre-treatment being provided under the existing condition prior to discharging into the existing deep injection wells.

3 POST-DEVELOPMENT ANALYSIS

The Typical Section will not change from the existing conditions. It will still include four (4) eleven (11) foot travel lanes and one eight (8) foot parking lane on the south side of the corridor. The proposed condition will include curb and gutter on both sides of the street. Therefore, runoff from the proposed improvements will flow into curb-type inlets where it will be collected and conveyed to twelve (12) new injection wells in addition to the five (5) existing wells.

The drainage system is designed based on a 10-Year storm with a duration of 1-Hr, 8-Hrs and 24-Hrs. Also the SFWMD 25-Year 72-Hrs storm was considered. The system is designed so that during anyone of these storms there will be at least one 11 foot lane at the center of the roadway left un-flooded.

The information and data available for this project was obtained from the Geotechnical Report prepared by Advance Consulting Engineering services, Inc. on February 19, 2001 and the Drainage Report and Plans prepared by Metric Engineering on September 2001 for the project just north of the limits of this project. In addition, BCC Engineers met with FDOT District 6 drainage Engineers, Mr. Ricardo Salazar, P.E. and Reinaldo Carvajal, P.E. to discuss the drainage analysis and our staff engineers performed site visits to verify the available information and field measured information not available in the existing drawings. See **Appendix 7** for meeting minutes. The FDOT Drainage Manual (January 2006), the SFWMD Permit Information Manual, Volume IV and The FDOT Plans Preparation Manual (Volume I and Volume II) was used to support the drainage calculation, hydrologic/hydraulic modeling and the design plans.

3.1 Proposed Drainage System

The proposed drainage system consists of a total 8 basins each one being considered a system for the purpose of water quality and stormwater routing. The following is a brief description of each one of the proposed systems. Please also refer to the Post-Development Drainage Maps provided in **Appendix 2** of this report.

In general terms, the runoff will essentially flow to the outside of the road where a curb and gutter will convey the water to proposed inlets. The pipe system will then convey the water to a two chamber box with a weir separating each of the chambers. Water will proceed to flow into a CDS unit where water quality treatment will be provided before it is routed to the second chamber to be discharged through the proposed deep injection well. The weir within the two chamber box will serve the purpose of bypassing the CDS unit during large storm events or peak flows. Discharges into the existing deep injection well, when available for a system, will also be pre-treated for water quality using a CDS unit.

System 1:

This basin extends from southern limits of the project at Station 10+72.01 to the high point at Station 14+20.00. The basin area for this system also includes an additional 0.10 Ac. as a result of pavements areas flowing into inlets part of this system but outside the project limits. This system will provided with one new deep injection well and an existing deep injection well.

System 2:
This basin extends from the high point at Station 14+20.00 to the high point at Station 21+80.00. This system will provided with three new deep injection wells. There are not existing wells within the limits of this system.

System 3:
This basin extends from the high point at Station 21+80.00 to the high point at Station 28+24.00. This system will provided with one new deep injection well and one existing deep injection well.

System 4:
This basin extends from the high point at Station 28+24.00 to the high point at Station 33+80.00. This system will provided with one new deep injection well and one existing deep injection well.

System 5:
This basin extends from the high point at Station 33+80.00 to the high point at Station 38+80.00. This system will provided with two new deep injection wells and there are not existing deep injection well.

System 6:
This basin extends from the high point at Station 38+80.00 to the high point at Station 43+80.00. This system will provided with one new deep injection well and one existing deep injection well.

System 7:
This basin extends from the high point at Station 43+80.00 to the high point at Station 49+43.25. This system will provided with one new deep injection well and one existing deep injection well.

System 8:
This basin extends from the high point at Station 49+43.25 to the northern limits of project at Station 52+38.49. This system will provided with one new deep injection well and one existing deep injection well.

3.2 Water Quality:

Due to limited space to provide detention for water quality a CDS system is being used to provide water quality treatment. This system works by creating a vortex to separate suspended solids into a separation chamber; floatable debris is also retained in the separation chamber until removed. Collected runoff will flow into the first chamber of the injection well and will be diverted into the CDS structure. Once the runoff is treated for water quality at the CDS unit, the runoff will return to the second chamber of the deep well box. From this chamber the runoff will enter into the deep injection well. The two chambers of the deep injection well box are separated by a way of a weir to provide for emergency overflow allowing the system to bypass the CDS unit for large storm events.

As stated earlier in this report the new system is considered a retrofit and will provide an improvement over the existing water quality conditions by providing water quality treatment using the CDS structures.

For water quality calculations please refer to **Appendix 3.**

The following table summarizes the water quality provided and required for each one of the basins.

System	Structure ID	Treatment Capacity (cfs)	Treatment Flow* (cfs)	CDS Model	Net Annual TSS Removal
1	CDS-1	1.1	1.54	CDS2020-5-C	80%
	CDS-2	1.1		CDS2020-5-C	80%
2	CDS-3	1.1	2.71	CDS2020-5-C	80%
	CDS-4	1.1		CDS2020-5-C	80%
	CDS-5	1.1		CDS2020-5-C	80%
3	CDS-6	1.6	2.30	CDS2025-5-C	80%
	CDS-7	1.1		CDS2020-5-C	80%
4	CDS-8	1.6	3.80	CDS2025-5-C	80%
	CDS-9	1.1		CDS2020-C	80%
	CDS-10	1.6		CDS2025-5-C	80%
	CDS-11	1.6		CDS2025-5-C	80%
5	CDS-12	1.1	1.80	CDS2020-C	80%
	CDS-13	1.6		CDS2025-5-C	80%
6	CDS-14	1.6	2.01	CDS2025-5-C	80%
	CDS-15	1.1		CDS2020-5-C	80%
7	CDS-16	0.7	1.02	CDS2015-5-C	80%
	CDS-17	0.7		CDS2015-5-C	80%

*Treatment Flow determined by using the Peak Discharge method to calculate the flowrate associated with 2.5 inches of runoff over the impervious area.

3.3 Water Quantity

As stated before in this project, the drainage system being proposed consists of a closed system with no overflow structures into any surface water. All runoff will be routed to the proposed and existing deep injection wells. The computer application Advanced Interconnected Pond Routing (AdICPR) V. 3.02 Service Pack 9 by Streamline Technologies, Inc. was used to perform the storm routing of the proposed system. This application was utilized to determine the number of wells needed for to meet the criteria specific to this project as well as to determine the size of the different pipes being proposed as part of the system.

Please refer to **Appendix 5** of this report for the Post-Development analysis Node Network Diagram, a schematic of the model used to simulate the proposed drainage system using AdICPR.

Pre- vs. Post-Development analysis was not required for this project as the system was designed as a self-contained system with no overflow to any surface waters. The Post-Development condition can only improve the existing conditions as it will maintain the existing deep injection wells and will provide an additional nine (9) deep injection wells. Those additional wells will increase the discharge capacity of the drainage system and will help recover quicker from large storm events that might temporarily flood the roadway in this section.

Please refer to **Appendix 5** of this report for the results of this analysis. The node maximum condition report provides a summary of the maximum stages obtained for each node for each one of the storm event modeled for this project.

4 ON-SITE CONVEYANCE ANALYSIS

The drainage system proposed for this project consists of curb and gutter on both sides of the street that will help convey the runoff to the curb type inlets provided throughout the project. The following section summarizes the spread analysis conducted during the design of this drainage system.

The spread analysis consisted of a three step process. First the spread calculations were used to determine the maximum spacing between drainage inlets by determining the maximum length of road that can contribute water to an inlet before the spread exceeds the maximum allowed. The second step consisted of the verification of the inlet capacity at the low points so that the allowable spread is not exceeded. The third step was a check to ensure that the maximum allowable flow was not exceeded when bypass flow from upstream inlets was considered.

4.1 Spread Analysis Calculations

As rain falls on a sloped pavement surface it begins to accumulate at the outer edge of the road and spread onto the travel lane. This accumulation of water on a travel lane can disrupt traffic flow, reduce vehicle skid resistance and increase the potential for motorist to hydroplane. Spread calculations are performed to minimize these problems by collecting runoff in gutters and intercepting it using storm water inlets.

In the case of this project, we have two separate scenarios. For a design speed of less than 45 mph and a curb and gutter section, the maximum allowed spread is ½ of a travel lane for a rainfall intensity of 4 in/hr. On the north side, the typical sections includes a 16 inch gutter width and an 11-foot outside travel lane (11-feet x ½ = 5.5-feet), the total spread allowed from the face of the curb is 6.83 feet.

For the typical section condition with a parking lane, no encroachment is allowed on the travel lanes. Therefore for the south side, the total spread allowed from the face of the curb is 8.00 feet according to the typical section of the road. Please refer to **Appendix 1** for the roadway typical section.

The north side of our project does not have any sidewalk the cross sectional area is less than the south side. The maximum allowable distance between inlets on the north side is 300 feet. The south side includes a sixteen (16) foot sidewalk/promenade an eight (8) foot parking lane. Therefore the maximum inlet spacing is less on the south side that that one obtained for the north side. The allowable distance between inlets on the south side is 170 feet. At some locations the inlets have been spaced more closely due additional areas draining into the roadway. These calculations are included in this report as **Appendix 4.**

4.2 Inlet Capacity Calculations

The capability of the proposed drainage inlets to handle the contributing runoff was also verified. First the project's profile was analyzed. Distances between high points varied throughout the project. Therefore, we analyzed an area 250, 330 and 430 feet long times

the width of the roadway which cover all possible scenarios found within the project limits. Using the Rational Method we calculated the runoff discharge contributed by the three sections. Table 1 below summarizes the contributing flow per area

Table 1 - Summary of Contributing Flow from Project Area					
	Feet	**CFS**		**Feet**	**CFS**
Section 1 (North Side)	250.00	0.52	**Section 2 (South Side)**	250.00	1.00
	330.00	0.69		330.00	1.32
	430.00	0.90		430.00	1.73

The capacity of the inlet types used at the low points of the project were calculated under weir flow condition assuming the inlets were working at 75% of their capacity (25% clogged by debris). P-2, P-4 and P-6 Structures were analyzed. The calculations are included in **Appendix 4** of this report. Table 2 below summarizes the contributing inlet capacity.

Table 2 - Summary of Inlet Capacity	
Inlet Type	**Inlet Capacity CFS**
P-2	1.89
P-4	1.23
P-6	1.56

As a result, the proposed design includes P-6 structures at the low points and P-5 structures between the high point and the P-6 structures throughout the north and the south side of the corridor. Due to utility conflicts at specific locations P-2 structures where utilized at the low points and P-1 structures between the P-2 and the high points in specific locations to avoid the utilities.

5 MOT DRAINAGE

During construction, the drainage is not expected to represent an issue. The construction has been phased such that no ponding areas will be created and spread encroaching into the travel lanes will not be an issue.

Temporary barrier walls are being considered for this project but at all times the temporary barrier is located on the high side of the road and therefore it is not going to create any conditions where ponding could occur. In the event that temporary barrier wall was required in a location where ponding would occur the maximum spread created by the flow through barrier wall slots will be less then the maximum allowable spread. Based on the Temporary Drainage Design Handbook, October 2001, the maximum spread caused by the barrier wall for the project conditions of a longitudinal slope of 0.3% and a cross slope of 2% is 2.6 feet. This condition occurs when 36 feet of pavement are contributing runoff to the barrier slot. Since the maximum allowable spread for this roadway conditions is 5.0 feet (half a reduced MOT lane), it is concluded that the use of temporary barrier walls will not cause the spread to exceed the maximum allowed.

6 OPTIONAL PIPE MATERIAL

The only pipes to be used as part of this project consist of 18” and 24” diameter storm sewer pipes. As part of the geotechnical study prepared for this project, a Corrosivity Test Result table analysis was conducted. Only one test was conducted within the project limits and resulted in Extremely Aggressive environmental conditions. Please refer to Appendix 6 for the analysis and summary of results.

7 RESULTS

In general the drainage system will function adequately during and after construction. It meets all FDOT criteria or special criteria for this project regarding the proper sizing of the system, spread encroachment into the travel lanes, or clogging of the system due to debris. The following is a brief summary of the analysis of the system.

Water Quality:
There will be no change in impervious areas and the project will therefore be categorized as a "retrofit". Water quality for this project will be provided by CDS structures which treat the water before it enter the deep wells. The proposed CDS units will meet the SFWMD required water quality flow. The CDS system will provide a significant improvement over the existing conditions where there is not water quality pre-treatment.

Water Quantity:
The drainage system has been designed for the 10-Year storm event including the 1-Hour, 8-Hour, and 24-Hour storm events. The stormwater system will work satisfactorily within the criteria established for this project. The criteria used for this project allows the ponding of the travel lanes for the 10-Year return storm event but will maintain at least one 11 foot lane open to traffic for emergency services. Due to the low elevation of the road and the tidal influence over the tailwater, the deep injection wells cannot develop a significant head without the water encroaching into the travel lanes. For that reason the design of the system does not attempt to maintain all lanes open for the design storm.

Pre- vs. Post-Development analysis was not required for this project as the system was designed as a self-contained system with no overflow to any surface waters. The Post-Development condition can only improve the existing conditions as it will maintain the existing deep injection wells and will provide an additional nine (9) deep injection wells. Those additional wells will increase the discharge capacity of the drainage system and will help recover quicker from large storm events that might temporarily flood the roadway in this section.

Flood Plain Impacts and Mitigation:
It is not a requirement for this project to provide any compensation for encroachment into flood plane areas.

On-Site Conveyance:
The drainage system consists of curb and gutter on both sides of the street conveying the runoff to the proposed curb type inlets. Runoff will be collected by curb type inlets and conveyed to drainage wells. The proposed location of the inlets has been designed to avoid any violations to the maximum spread allowed. The system has been verified taking into account contributing area, bypass, and capacity of the inlets at the low points of the road. The system meets all the criteria for maximum spread.

MOT Drainage:
During construction, drainage will not present an issue for this project. In the event there are any modifications to the Maintenance of Traffic Plans, temporary barrier walls will not curb the water to a level where the allowed spread will be exceeded.

Appendix 1 – Figures and Design Aids

Appendix 2 – Drainage Maps

Appendix 3 – Water Quality Calculations

Appendix 4 – Spread Calculations

Appendix 5 – Storm Sewer Tabulations

Appendix 6 – Optional Pipe Material Calculations

Appendix 7 – Correspondence

Appendix 8 – Temporary Drainage/Maintenance of Traffic

APPENDIX 1

FIGURES AND DESIGN AIDS

FINANCIAL PROJECT ID 250548-4

STATE PROJECT NO ..... N/A

FEDERAL AID NO ..... N/A

STATE ROAD NO ..... S.R. AIA

COUNTY ..... MONROE COUNTY

DESCRIPTION ..... RECONSTRUCTION

END PROJECT
STATION 51+95.00
M.P. 0.778

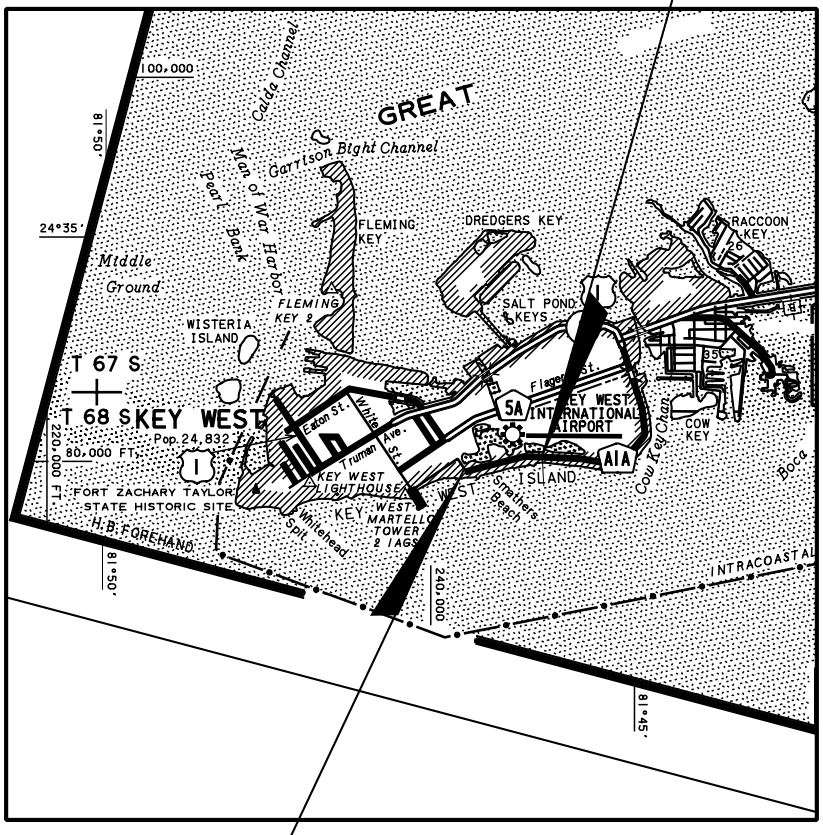

T-12-S
T-13-S

R 26 E
R 25 E

BEGIN PROJECT ℄ CONST
STATION 10+82.01
M.P. 0.000

LOCATION MAP

bcc engineering
7300 N. Kendall Drive, Suite 660
Miami, Florida 33156
Phone: (305) 670-2350
Fax: (305) 670-2351
Certificate of Authorization No. 7184

S. ROOSEVELT BLVD. (SR AIA)

TYPICAL SECTIONS

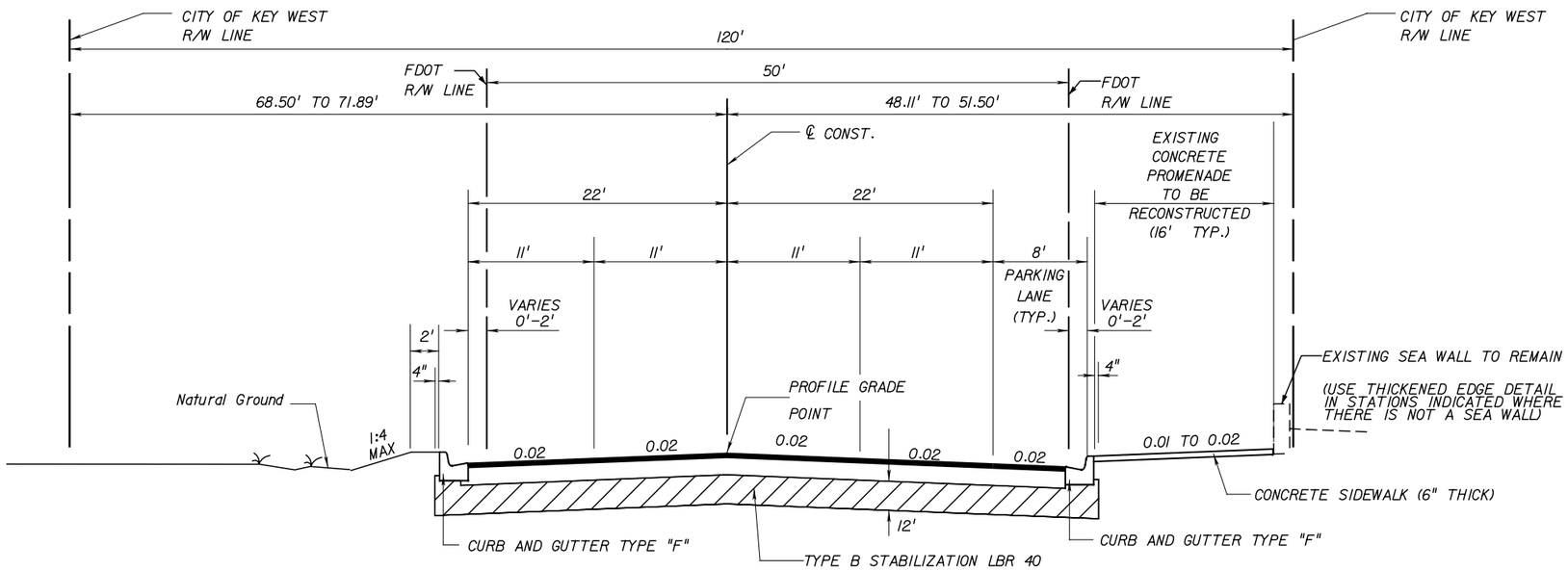

TYPICAL SECTION
SR AIA (SOUTH ROOSEVELT BOULEVARD)
STA. 10+93.72 TO STA. 51+95.00

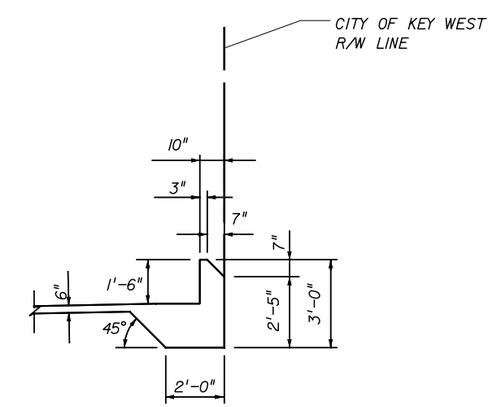

STD. THICKENED EDGE AND PARAPET WALL DETAIL

COST OF THICKENED EDGE AND PARAPET WALL TO BE INCLUDED IN COST OF SIDEWALK
FROM STA. 11+84.66 TO STA. 12+68.12
FROM STA. 48+25.22 TO 51+97.64

TRAFFIC DATA

CURRENT YEAR = 2006 AADT= 11,500
ESTIMATED OPENING YEAR = 2008 AADT= 11,800
ESTIMATED DESIGN YEAR = 2028 AADT= 14,200
K = 10.04% D= 56.02% T=3.12%
DESIGN SPEED = 40 MPH.

NEW CONSTRUCTION

OPTIONAL BASE GROUP 9 WITH
TYPE SP STRUCTURAL COURSE (TRAFFIC C) (2.5")
AND FRICTION COURSE FC-9.5 (1") (RUBBER)

REVISIONS					
DATE	BY	DESCRIPTION	DATE	BY	DESCRIPTION

S Z & A
SANCHEZ, ZEINALI & ASSOCIATES
10305 NW 41st STREET SUITE 103
MIAMI, FLORIDA 33178
(305) 477-4467
CERTIFICATE OF AUTHORIZATION NO. 7840
ENGINEER OF RECORD:
FRANK PANELLAS, P.E.
P.E. LICENSE NO. 59448

CITY OF KEY WEST
PUBLIC WORKS DEPARTMENT

ROAD NO.	COUNTY	FINANCIAL PROJECT ID
SR AIA	MONROE	250548-4

TYPICAL SECTION

SHEET NO.

FEMA
MAPS

NOTES TO USERS

This map is for use in administering the National Flood Insurance Program. It does not necessarily identify all areas subject to flooding, particularly from local drainage sources of small size. The **community map repository** should be consulted for possible updated or additional flood hazard information.

To obtain more detailed information in areas where **Base Flood Elevations** (BFEs) and/or **floodways** have been determined, users are encouraged to consult the Flood Profiles, Floodway Data and/or Summary of Stillwater Elevations tables contained within the Flood Insurance Study (FIS) report that accompanies this FIRM. Users should be aware that BFEs shown on the FIRM represent rounded whole-foot elevations. These BFEs are intended for flood insurance rating purposes only and should not be used as the sole source of flood elevation information. Accordingly, flood elevation data presented in the FIS report should be utilized in conjunction with the FIRM for purposes of construction and/or floodplain management.

Coastal Base Flood Elevations shown on this map apply only landward of 0.0' National Geodetic Vertical Datum of 1929 (NGVD 29). Users of this FIRM should be aware that coastal flood elevations are also provided in the Summary of Stillwater Elevations tables in the Flood Insurance Study report for this jurisdiction. Elevations shown in the Summary of Stillwater Elevations tables should be used for construction and/or floodplain management purposes when they are higher than the elevations shown on this FIRM.

Boundaries of the **floodways** were computed at cross sections and interpolated between cross sections. The floodways were based on hydraulic considerations with regard to requirements of the National Flood Insurance Program. Floodway widths and other pertinent floodway data are provided in the Flood Insurance Study report for this jurisdiction.

Certain areas not in Special Flood Hazard Areas may be protected by **flood control structures.** Refer to Section 2.4 "Flood Protection Measures" of the Flood Insurance Study report for information on flood control structures in this jurisdiction.

The **projection** used in the preparation of this map was Universal Transverse Mercator (UTM) zone 17. The **horizontal datum** was NAD 83, GRS80 spheroid. Differences in datum, spheroid, projection or UTM zones used in the production of FIRMs for adjacent jurisdictions may result in slight positional differences in map features across jurisdiction boundaries. These differences do not affect the accuracy of this FIRM.

Flood elevations on this map are referenced to the National Geodetic Vertical Datum of 1929. These flood elevations must be compared to structure and ground elevations referenced to the same **vertical datum**. For information regarding conversion between the National Geodetic Vertical Datum of 1929 and the North American Vertical Datum of 1988, visit the National Geodetic Survey website at http://www.ngs.noaa.gov or contact the National Geodetic Survey at the following address:

Spatial Reference System Division
National Geodetic Survey, NOAA
Silver Spring Metro Center
1315 East-West Highway
Silver Spring, Maryland 20910
(301) 713-3191

To obtain current elevation, description, and/or location information for **bench marks** shown on this map, please contact the Information Services Branch of the National Geodetic Survey at **(301) 713-3242**, or visit their website at http://www.ngs.noaa.gov.

Base map information shown on this FIRM was derived from U.S. Geological Survey Digital Orthophoto Quadrangles produced at a scale of 1:12,000 from photography dated 1994 and 1999. In areas where the Digital Orthophoto Quadrangles were not available, no image is shown. If land mass is located in the area where there is no Digital Orthophoto Quadrangle, the base map information was derived from U.S. Geological Survey Digital Line Graphs.

This map reflects more detailed and up-to-date **stream channel configurations** than those shown on the previous FIRM for this jurisdiction. The floodplains and floodways that were transferred from the previous FIRM may have been adjusted to conform to these new stream channel configurations. As a result, the Flood Profiles and Floodway Data tables in the Flood Insurance Study report (which contains authoritative hydraulic data) may reflect stream channel distances that differ from what is shown on this map.

Corporate limits shown on this map are based on the best data available at the time of publication. Because changes due to annexations or de-annexations may have occurred after this map was published, map users should contact appropriate community officials to verify current corporate limit locations.

Please refer to the separately printed **Map Index** for an overview map of the county showing the layout of map panels; community map repository addresses; and a Listing of Communities table containing National Flood Insurance Program dates for each community as well as a listing of the panels on which each community is located.

Contact the **FEMA Map Service Center** at 1-800-358-9616 for information on available products associated with this FIRM. Available products may include previously issued Letters of Map Change, a Flood Insurance Study report, and/or digital versions of this map. The FEMA Map Service Center may also be reached by Fax at 1-800-358-9620 and their website at http://www.msc.fema.gov.

If you have **questions about this map** or questions concerning the National Flood Insurance Program in general, please call **1-877-FEMA MAP** (1-877-336-2627) or visit the FEMA website at http://www.fema.gov.

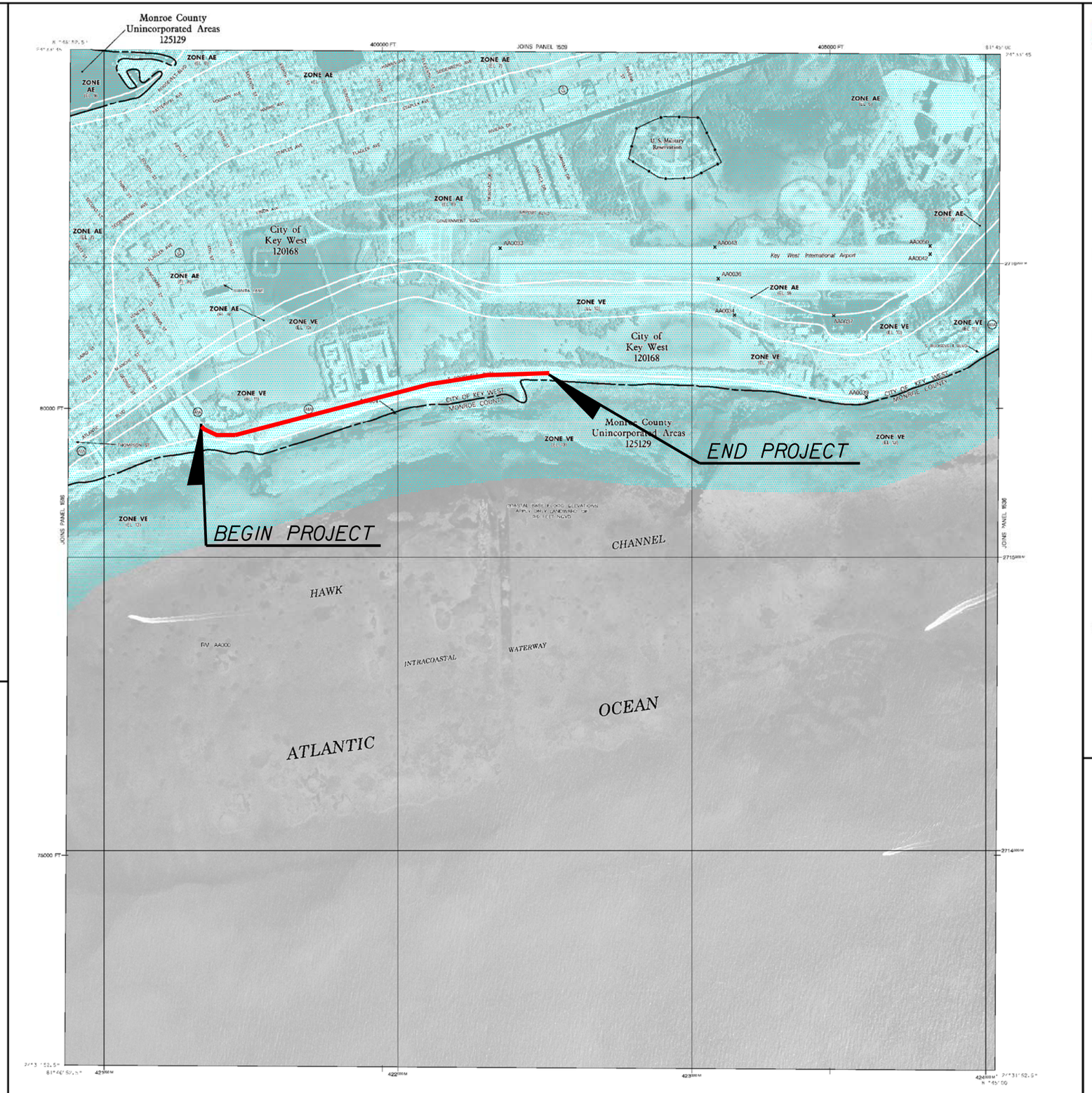

LEGEND

SPECIAL FLOOD HAZARD AREAS SUBJECT TO INUNDATION BY THE 1% ANNUAL CHANCE FLOOD

The 1% annual chance flood (100-year flood), also known as the base flood, is the flood that has a 1% chance of being equaled or exceeded in any given year. The Special Flood Hazard Area is the area subject to flooding by the 1% annual chance flood. Areas of Special Flood Hazard include Zones A, AE, AH, AO, AR, A99, V, and VE. The Base Flood Elevation is the water-surface elevation of the 1% annual chance flood.

ZONE A	No Base Flood Elevations determined.
ZONE AE	Base Flood Elevations determined.
ZONE AH	Flood depths of 1 to 3 feet (usually areas of ponding); Base Flood Elevations determined.
ZONE AO	Flood depths of 1 to 3 feet (usually sheet flow on sloping terrain); average depths determined. For areas of alluvial fan flooding, velocities also determined.
ZONE AR	Special Flood Hazard Area formerly protected from the 1% annual chance flood by a flood control system that was subsequently decertified. Zone AR indicates that the former flood control system is being restored to provide protection from the 1% annual chance or greater flood.
ZONE A99	Area to be protected from 1% annual chance flood by a Federal flood protection system under construction; no Base Flood Elevations determined.
ZONE V	Coastal flood zone with velocity hazard (wave action); no Base Flood Elevations determined.
ZONE VE	Coastal flood zone with velocity hazard (wave action); Base Flood Elevations determined.

FLOODWAY AREAS IN ZONE AE

The floodway is the channel of a stream plus any adjacent floodplain areas that must be kept free of encroachment so that the 1% annual chance flood can be carried without substantial increases in flood heights.

OTHER FLOOD AREAS

ZONE X Areas of 0.2% annual chance flood; areas of 1% annual chance flood with average depths of less than 1 foot or with drainage areas less than 1 square mile; and areas protected by levees from 1% annual chance flood.

OTHER AREAS

ZONE X Areas determined to be outside the 0.2% annual chance floodplain.

ZONE D Areas in which flood hazards are undetermined, but possible.

COASTAL BARRIER RESOURCES SYSTEM (CBRS) AREAS

OTHERWISE PROTECTED AREAS (OPAs)

CBRS areas and OPAs are normally located within or adjacent to Special Flood Hazard Areas.

1% annual chance floodplain boundary

0.2% annual chance floodplain boundary

Floodway boundary

Zone D boundary

CBRS and OPA boundary

Boundary dividing Special Flood Hazard Area Zones and boundary dividing Special Flood Hazard Areas of different Base Flood Elevations, flood depths or flood velocities.

513 — Base Flood Elevation line and value; elevation in feet*

(EL 987) — Base Flood Elevation value where uniform within zone; elevation in feet*

*Referenced to the National Geodetic Vertical Datum of 1929

A — A Cross section line

23 - - - - 23 Transect line

97°07'30", 32°22'30" Geographic coordinates referenced to the North American Datum of 1983 (NAD 83), Western Hemisphere

4279000M 1000-meter Universal Transverse Mercator grid values, zone 17

600000 FT 5000-foot grid values: Florida State Plane coordinate system, east zone (FIPSZONE 901), Transverse Mercator projection

DX5510 × Bench mark (see explanation in Notes to Users section of this FIRM panel)

● M1.5 River Mile

MAP REPOSITORY
Refer to listing of Map Repositories on Map Index

EFFECTIVE DATE OF COUNTYWIDE
FLOOD INSURANCE RATE MAP
October 17, 1989

EFFECTIVE DATE(S) OF REVISION(S) TO THIS PANEL
November 4, 1992; June 16, 1995; March 3, 1997; December 22, 1998; December 20, 2000; and February 18, 2005 – for description of revision, see Notice to Users page in the Flood Insurance Study report.

February 18, 2005 – to change Special Flood Hazard Areas, to update map format, and to incorporate previously issued Letter of Map Revision.

For community map revision history prior to countywide mapping, refer to the Community Map History table located in the Flood Insurance Study report for this jurisdiction.

To determine if flood insurance is available in this community, contact your insurance agent or call the National Flood Insurance Program at 1-800-638-6620.

MAP SCALE 1" = 500'

250 0 500 1000 FEET

150 0 150 300 METERS

NFIP

NATIONAL FLOOD INSURANCE PROGRAM

PANEL 1517K

FIRM
FLOOD INSURANCE RATE MAP
MONROE COUNTY,
FLORIDA
AND INCORPORATED AREAS

PANEL 1517 OF 1585

(SEE MAP INDEX FOR FIRM PANEL LAYOUT)

CONTAINS:

COMMUNITY	NUMBER	PANEL	SUFFIX
KEY WEST, CITY OF	120168	1517	K
MONROE COUNTY	125129	1517	K

Notice to User: The **Map Number** shown below should be used when placing map orders; the **Community Number** shown above should be used on insurance applications for the subject community.

MAP NUMBER
12087C1517K

MAP REVISED
FEBRUARY 18, 2005

Federal Emergency Management Agency

TAILWATER ELEVATION DETERMINATION

Mar 2 2007 10:50 ELEVATIONS ON STATION DATUM
National Ocean Service (NOAA)

Station: 8724580 T.M.: 0 W
Name: KEY WEST, FL Units: Feet
Status: Accepted Epoch: 1983-2001

Datum	Value	Description
MHHW	6.37	Mean Higher-High Water
MHW	6.08	Mean High Water
DTL	5.46	Mean Diurnal Tide Level
MTL	5.44	Mean Tide Level
MSL	5.45	Mean Sea Level
MLW	4.80	Mean Low Water
MLLW	4.56	Mean Lower-Low Water
GT	1.81	Great Diurnal Range
MN	1.28	Mean Range of Tide
DHQ	0.29	Mean Diurnal High Water Inequality
DLQ	0.24	Mean Diurnal Low Water Inequality
HWI	2.77	Greenwich High Water Interval (in Hours)
LWI	8.40	Greenwich Low Water Interval (in Hours)
NAVD	6.32	North American Vertical Datum
Maximum	8.30	Highest Water Level on Station Datum
Max Date	19650908	Date Of Highest Water Level
Max Time	09:36	Time Of Highest Water Level
Minimum	2.90	Lowest Water Level on Station Datum
Min Date	19280219	Date Of Lowest Water Level
Min Time	03:06	Time Of Lowest Water Level

To refer Water Level Heights to a Tidal Datum, apply the desired Datum Value.

Click HERE for further station information including New Epoch products.

U.S. DEPARTMENT OF COMMERCE
National Oceanic and Atmospheric Administration
National Ocean Service

Datums Page

PUBLICATION DATE: 06/28/2001
SUPERCEDED DATE: 04/21/2003

Station ID: 8724580
Name: KEY WEST FLORIDA
NOAA Chart: 11447
USGS Quad: KEY WEST

Latitude: 24° 33.2' N
Longitude: 81° 48.5' W

To reach the tidal bench marks from Key West International Airport, proceed west on Roosevelt Boulevard for 3.9 km (2.4 mi) to White Street, then NW on White Street for 2.3 km (1.4 mi) to Southard Street, turn left onto Southard Street and go west to the U.S. Naval Reservation main gate at Thomas Street, continue 0.3 km (0.2 mi) to a second gate at Emma Street. The bench marks are on the Naval Base, near the County Courthouse, and along Front Street in downtown Key West. The tide gauge and staff are at the concrete sea wall near the north property line of the Naval Base. NOTE: A pass to enter the Naval Base must be obtained at the Boca Chica Naval Air Station.

T I D A L B E N C H M A R K S

PRIMARY BENCH MARK STAMPING: 4580 E 1998
DESIGNATION: 872 4580 E

MONUMENTATION: Flange-encased Rod
AGENCY: National Ocean Service (NOS)
SETTING CLASSIFICATION: Stainless steel rod in sleeve

VM#: 13915
PID:

The bench mark is a flange-encased rod located at the north end of the Truman Annex property in a grassy area on the east side of the inside pier face and inside the boat basin, 44.17 m (144.9 ft) east of the west inside face of the concrete pier face, 37.70 m (123.7 ft) NNE of the NE corner of a two story white block building, 37.19 m (122.0 ft) SE of the SE corner of a concrete electrical building, 25.79 m (84.6 ft) west of the east chain link property fence, and 25.69 m (84.3 ft) east of the third light pole south of the north end of the property. The datum point is the top of a stainless steel rod driven 7.0 m (23 ft) to refusal, in a sleeve extending to a depth of 0.9 m (3 ft), and encased in a 5-inch NOS logo cap.

U.S. DEPARTMENT OF COMMERCE
National Oceanic and Atmospheric Administration
National Ocean Service

PUBLICATION DATE: 06/28/2001
SUPERCEDED DATE: 04/21/2003

Station ID: 8724580
Name: KEY WEST FLORIDA
NOAA Chart: 11447
USGS Quad: KEY WEST

Latitude: 24° 33.2' N
Longitude: 81° 48.5' W

T I D A L B E N C H M A R K S

BENCH MARK STAMPING: 29 1923 8.140
DESIGNATION: 872 4580 TIDAL 29

MONUMENTATION: Tidal Station disk VM#: 706
AGENCY: US Coast and Geodetic Survey (USC&GS) PID#: AA0009
SETTING CLASSIFICATION: Concrete wall of a building

The primary bench mark is a disk set vertically in the east concrete wall and at the NE corner of the Officer Q and T Building, located at Key West Naval Station near the extended center line of Eaton and Front Streets, 12.04 m (39.5 ft) west of the west curb of Front Street (extended from the City of Key West), 10.67 m (35.0 ft) south of the south curb of Eaton Street, and 1.22 m (4.0 ft) above the level of the ground.

BENCH MARK STAMPING: 24 1923 6.529
DESIGNATION: 872 4580 TIDAL 24

MONUMENTATION: Tidal Station disk VM#: 710
AGENCY: US Coast and Geodetic Survey (USC&GS) PID#: AA0003
SETTING CLASSIFICATION: Concrete pillar of a building

The bench mark is a disk set vertically in the NW concrete face of a concrete pillar, near the west corner of Cavanaghs Clothing Store, at Key West 0.08 km (0.05 mi) NE along Front Street from its intersection with Duval Street, at the intersection of Front and Ann Street, 2.90 m (9.5 ft) SE of the SE curb of Front Street, 1.83 m (6.0 ft) NE of the NE curb of Ann Street, 0.15 m (0.5 ft) NE of the west corner of the building, and 1.25 m (4.1 ft) above the level of the sidewalk.

U.S. DEPARTMENT OF COMMERCE
National Oceanic and Atmospheric Administration
National Ocean Service

PUBLICATION DATE: 06/28/2001
SUPERCEDED DATE: 04/21/2003

Station ID: 8724580
Name: KEY WEST FLORIDA
NOAA Chart: 11447
USGS Quad: KEY WEST

Latitude: 24° 33.2' N
Longitude: 81° 48.5' W

T I D A L B E N C H M A R K S

BENCH MARK STAMPING: 26 1923 9.482
DESIGNATION: 872 4580 TIDAL 26

MONUMENTATION: Tidal Station disk VM#: 712
AGENCY: US Coast and Geodetic Survey (USC&GS) PID#: AA0005
SETTING CLASSIFICATION: Brick wall of a building

The bench mark is a disk set vertically in the east brick wall of Building No. 91 on the property of the Truman Annex Company, 0.6 km (0.4 mi) NW along Whitehead Street from the Courthouse, at the intersection of Whitehead and Front Street, 45.72 m (150.0 ft) SW of the center of the street intersection, 12.71 m (41.7 ft) west of the west curb of Front Street, 10.33 m (33.9 ft) south of the NE corner of the building, 0.91 m (3.0 ft) north of the north end of the third step from top at entrance to building, and about 1.07 m (3.5 ft) above the level of the ground.

BENCH MARK STAMPING: 30 1923 16.417
DESIGNATION: 872 4580 TIDAL 30

MONUMENTATION: Tidal Station disk VM#: 714
AGENCY: US Coast and Geodetic Survey (USC&GS) PID#: AA0007
SETTING CLASSIFICATION: Courthouse wall

The bench mark is a disk set vertically in a wall of the old County Courthouse on Whitehead Street, between Fleming and Southard Streets, in the NE face of the building, 30.18 m (99.0 ft) SW of the SW curb of Whitehead Street, 14.63 m (48.0 ft) NW of the center of the NE entrance to the building, 0.30 m (1.0 ft) SE of the north corner of the building, and 1.07 m (3.5 ft) above the ground.

U.S. DEPARTMENT OF COMMERCE
National Oceanic and Atmospheric Administration
National Ocean Service

PUBLICATION DATE: 06/28/2001
SUPERCEDED DATE: 04/21/2003

Station ID: 8724580
Name: KEY WEST FLORIDA
NOAA Chart: 11447
USGS Quad: KEY WEST

Latitude: 24° 33.2' N
Longitude: 81° 48.5' W

T I D A L B E N C H M A R K S

BENCH MARK STAMPING: 14.324
DESIGNATION: 872 4580 TIDAL BASIC

MONUMENTATION: Bench Mark disk VM#: 716
AGENCY: US Coast and Geodetic Survey (USC&GS) PID#: AA0008
SETTING CLASSIFICATION: Concrete monument

The bench mark is a disk set flush in the top of a concrete monument between Fleming and Southard Streets, 21.64 m (71.0 ft) east of the north corner of the old County Courthouse, 9.91 m (32.5 ft) SW of the SW curb of Whitehead Street, 6.71 m (22.0 ft) from a low cement wall on the Whitehead Street side of the County Courthouse grounds, 5.79 m (19.0 ft) north of the edge of a walk leading to the front steps of the courthouse, 2.93 m (9.6 ft) NW of the NW curb of the NE entrance to the old courthouse, and 0.91 m (3.0 ft) above the level of the sidewalk.

BENCH MARK STAMPING: KH-8 1962 JAX
DESIGNATION: KH 8

MONUMENTATION: Survey disk VM#: 1781
AGENCY: US Army Corps of Engineers (USE) PID#: AA1753
SETTING CLASSIFICATION: Dock

The bench mark is a disk set in the concrete dock west of the foot of Greene Street, 86.01 m (282.2 ft) west of the NE corner of the dock, 12.59 m (41.3 ft) east of the NW corner of the dock, and 0.67 m (2.2 ft) north of the north edge of the dock.

U.S. DEPARTMENT OF COMMERCE
National Oceanic and Atmospheric Administration
National Ocean Service

PUBLICATION DATE: 06/28/2001
SUPERCEDED DATE: 04/21/2003

Station ID: 8724580
Name: KEY WEST FLORIDA
NOAA Chart: 11447
USGS Quad: KEY WEST

Latitude: 24° 33.2' N
Longitude: 81° 48.5' W

T I D A L B E N C H M A R K S

BENCH MARK STAMPING: 4580 C 1992
DESIGNATION: 872 4580 C

MONUMENTATION: Tidal Station disk VM#: 12415
AGENCY: National Ocean Survey (NOS) PID:
SETTING CLASSIFICATION: Retaining wall

The bench mark is a disk set in the concrete surface of the second mooring bollard south of the Admirals Slip along the sea wall near the tide station, 25.90 m (85.0 ft) west of the U.S. Navy property line fence on the east side of the condominiums, 20.73 m (68.0 ft) north of the NW corner of the northern-most water valve pit, 14.33 m (47.0 ft) south of the south face of the Admirals Slip, and 0.18 m (0.6 ft) above the concrete deck.

BENCH MARK STAMPING: 4580 D 1993
DESIGNATION: 872 4580 D

MONUMENTATION: Tidal Station disk VM#: 13696
AGENCY: National Ocean Service (NOS) PID:
SETTING CLASSIFICATION: Concrete pad

The bench mark is a disk set flush in a concrete pad for a mooring bollard, approximately 183 m (600 ft) south of the gage house, 49.07 m (161.0 ft) NW of third light pole south of the gage house, 21.64 m (71.0 ft) south of the middle concrete pad housing ship to shore power, 10.80 m (35.4 ft) NW of the NW corner of the Concrete Power Building, and 0.91 m (3.0 ft) east of the sea wall.

U.S. DEPARTMENT OF COMMERCE
National Oceanic and Atmospheric Administration
National Ocean Service

PUBLICATION DATE: 06/28/2001
SUPERCEDED DATE: 04/21/2003

Station ID: 8724580
Name: KEY WEST FLORIDA
NOAA Chart: 11447
USGS Quad: KEY WEST

Latitude: 24° 33.2' N
Longitude: 81° 48.5' W

T I D A L B E N C H M A R K S

BENCH MARK STAMPING: KEY WEST GSL 1989
DESIGNATION: KEY WEST GSL

MONUMENTATION: Horizontal Station disk VM#: 15837
AGENCY: US Coast and Geodetic Survey (USC&GS) PID#: AA1645
SETTING CLASSIFICATION: Sea wall

The bench mark is a disk set in the concrete sea wall of the outer mole pier at the Truman Annex Naval Air Station, 0.6 km (0.4 mi) north along the outer mole pier from its south end, near the start of the curve of the sea wall to the NE, 22.25 m (73.0 ft) NW of the concrete base of the last light pole at the NNE end of the pier, 10.36 m (34.0 ft) SSW of a steel ladder attached to the NW side of the sea wall, 0.91 m (3.0 ft) north of the north corner of a bollard, and 0.91 m (3.0 ft) ESE of the WNW edge of the sea wall.

U.S. DEPARTMENT OF COMMERCE
National Oceanic and Atmospheric Administration
National Ocean Service

PUBLICATION DATE: 06/28/2001
SUPERCEDED DATE: 04/21/2003

Station ID: 8724580
Name: KEY WEST FLORIDA
NOAA Chart: 11447
USGS Quad: KEY WEST

Latitude: 24° 33.2' N
Longitude: 81° 48.5' W

T I D A L D A T U M S

Tidal datums at KEY WEST based on:

LENGTH OF SERIES: 19 YEARS
TIME PERIOD: January 1960 - December 1978
TIDAL EPOCH: 1960-1978
CONTROL TIDE STATION:

Elevations of tidal datums referred to Mean Lower Low Water (MLLW), in METERS:

HIGHEST OBSERVED WATER LEVEL (09/08/1965)	=	1.210
NORTH AMERICAN VERTICAL DATUM-1988 (NAVD)	=	0.608
MEAN HIGHER HIGH WATER (MHHW)	=	0.561
MEAN HIGH WATER (MHW)	=	0.472
MEAN SEA LEVEL (MSL)	=	0.280
MEAN TIDE LEVEL (MTL)	=	0.274
MEAN LOW WATER (MLW)	=	0.073
MEAN LOWER LOW WATER (MLLW)	=	0.000
LOWEST OBSERVED WATER LEVEL (02/19/1928)	=	-0.436

National Geodetic Vertical Datum (NGVD 29)

Bench Mark Elevation Information In METERS above:

Stamping or Designation	MLLW	MHW
4580 E 1998	1.795	1.323
29 1923 8.140	2.661	2.189
24 1923 6.529	2.136	1.664
26 1923 9.482	3.080	2.607
30 1923 16.417	5.200	4.728
14.324	4.566	4.093
KH-8 1962 JAX	3.052	2.580
4580 C 1992	2.573	2.101
4580 D 1993	2.563	2.091
KEY WEST GSL 1989	2.168	1.696

U.S. DEPARTMENT OF COMMERCE
National Oceanic and Atmospheric Administration
National Ocean Service

PUBLICATION DATE: 06/28/2001

Station ID: 8724580
Name: KEY WEST FLORIDA
NOAA Chart: 11447
USGS Quad: KEY WEST

SUPERCEDED DATE: 04/21/2003

Latitude: 24° 33.2' N
Longitude: 81° 48.5' W

D E F I N I T I O N S

Mean Sea Level (MSL) is a tidal datum determined over a 19-year National Tidal Datum Epoch. It pertains to local mean sea level and should not be confused with the fixed datums of North American Vertical Datum of 1988 (NAVD 88).

NGVD 29 is a fixed datum adopted as a national standard geodetic reference for heights but is now considered superseded. NGVD 29 is sometimes referred to as Sea Level Datum of 1929 or as Mean Sea Level on some early issues of Geological Survey Topographic Quads. NGVD 29 was originally derived from a general adjustment of the first-order leveling networks of the U.S. and Canada after holding mean sea level observed at 26 long term tide stations as fixed. Numerous local and wide-spread adjustments have been made since establishment in 1929. Bench mark elevations relative to NGVD 29 are available from the National Geodetic Survey (NGS) data base via the World Wide Web at National Geodetic Survey.

NAVD 88 is a fixed datum derived from a simultaneous, least squares, minimum constraint adjustment of Canadian/Mexican/United States leveling observations. Local mean sea level observed at Father Point/Rimouski, Canada was held fixed as the single initial constraint. NAVD 88 replaces NGVD 29 as the national standard geodetic reference for heights. Bench mark elevations relative to NAVD 88 are available from NGS through the World Wide Web at National Geodetic Survey.

NGVD 29 and NAVD 88 are fixed geodetic datums whose elevation relationships to local MSL and other tidal datums may not be consistent from one location to another.

The Vertical Mark Number (VM#) and PID# shown on the bench mark sheet are unique identifiers for bench marks in the tidal and geodetic databases, respectively. Each bench mark in either database has a single, unique VM# and/or PID# assigned. Where both VM# and PID# are indicated, both tidal and geodetic elevations are available for the bench mark listed.

The NAVD 88 elevation is shown on the Elevations of Tidal Datums Table Referred to MLLW only when two or more of the bench marks listed have NAVD 88 elevations. The NAVD 88 elevation relationship shown in the table is derived from an average of several bench mark elevations relative to tide station datum. As a result of this averaging, NAVD 88 bench mark elevations computed indirectly from the tidal datums elevation table may differ slightly from NAVD 88 elevations listed for each bench mark in the NGS database.

Date created
Fri Mar 2 10:56:26 EST 2007

Elevation Information for PID = AA0009, VM = 706
Station_ID --- 8724580

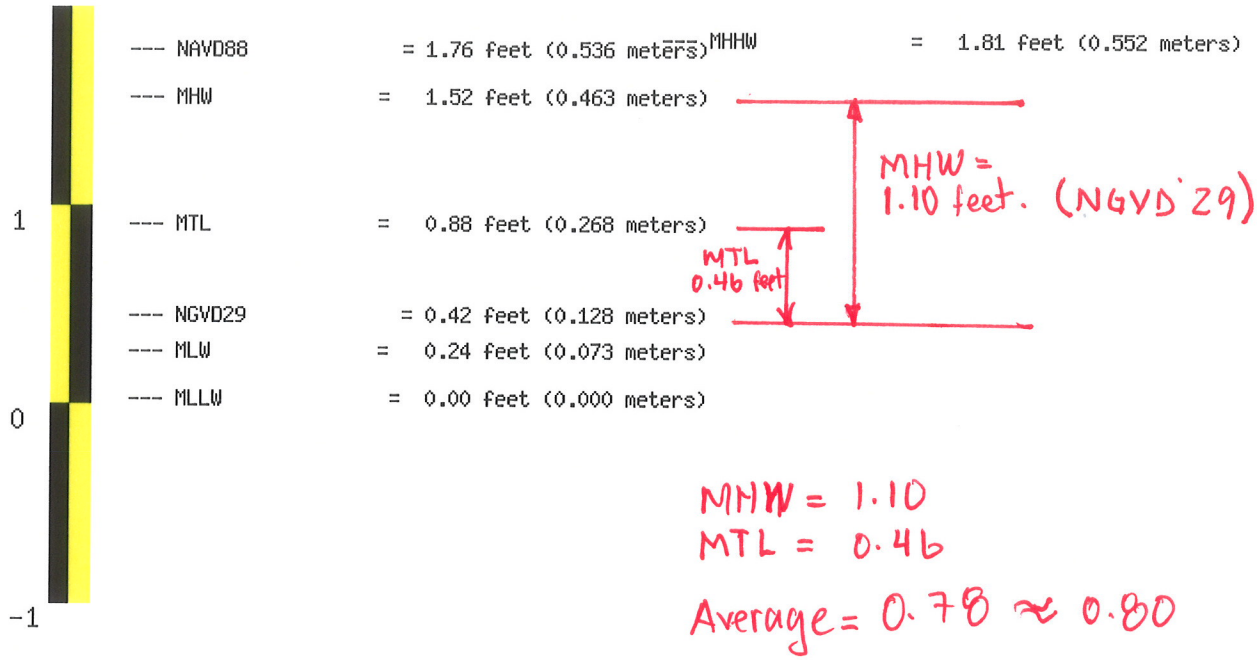

The NAVD 88 and the NGVD 29 elevations related to MLLW were computed from Bench Mark, 872 4580 TIDAL 29, at the station.

Displayed tidal datums are Mean Higher High Water(MHHW), Mean High Water (MHW), Mean Tide Level(MTL), Mean Low Water(MLW), and Mean Lower Low Water(MLLW) referenced on 1983-2001 Epoch

Questions concerning the VERTCON process may be mailed to NGS

Latitude: 24 33.2

Longitude: 081 48.5

NGVD 29 height: 0.472 FT

Datum shift(NAVD 88 minus NGVD 29): -1.342 feet

Converted to NAVD 88 height: -0.870 feet

CO-OPS Data Map - Windows Internet Explorer
http://egisws01.nos.noaa.gov/website/co-ops/stations/viewer.htm?ActiveLayer=3&Layers=000100000
NOAA
TIDES & CURRENTS
help
Access CO-OPS Data
1 - Choose data type
2 - Use navigation tools to find a station
3 - Use data tools to retrieve data
Navigation
Data
Data Type
Tide Data
Tide Predictions
PORTS
Historic Tide Data
Currents
Meteorological
Benchmarks
Datums
Harmonic Constituents
Channel Key
Fleming Key, North End
Sigsbee Park, Garrison Bight Channel
GULF OF MEXICO
Lake
Key Haven West
Stock Island
Cow Key Channel
FL
Riveria Canal, Key West
BAY
SALT POND
Key West
White Street Pier
Done
Internet
100%

Key West , FL

Station ID: 8724580

Station Information

Latitude: **24° 33.2' N**

Longitude: **81° 48.5' W**

Established: **Jan 18 1913**

Present Installation: **Feb 14 1992**

NOAA Chart #: **11447**

Time Meridian: **75**

Mean Range: **1.28 ft.**

Diurnal Range: **1.81 ft.**

Click image for larger image.

Minimum Water Level:

-1.66 ft. below MLLW

(02/19/1928)

Maximum Water Level:

1.93 ft. above MHHW

(09/08/1965)

Data Types Available:	Station and Bench Mark Drawing	Station Location Chartlet
Primary Water Level **Backup Water Level** **Wind** **Air Temperature** **Water Temperature** **Barometric Pressure**	Click HERE for Drawing (Not for navigational use)	Click HERE for Map (Not for navigational use)

EPOCH Update Information:

EPOCH Datum Comparison:	**Click HERE -**	check datum differences between the old epoch (1960-1978) and the new epoch (1983-2001)
Superceded Bench Mark Data Sheet:	**Click HERE -**	bench mark sheet on the old Tidal Datum Epoch (1960-1978)
Superceded Datums:	**Click HERE -**	datums on the old Tidal Datum Epoch (1960-1978)
Mean Sea Level Differences List:	**Click HERE -**	mean sea level differences between the two epochs for all stations.

Mean Sea Level Difference: for 8724580 Key West, FL	**1983-2001**	**1960-1978**	**Difference:**
	5.45 ft.	5.25 ft.	0.20 ft.

Location:

To reach the tidal bench marks from Key West International Airport, proceed

west on Roosevelt Boulevard for 3.9 km (2.4 mi) to White Street, then NW on White Street for 2.3 km (1.4 mi) to Southard Street, turn left onto Southard Street and go west to the U.S. Naval Reservation main gate at Thomas Street, continue 0.3 km (0.2 mi) to a second gate at Emma Street. The bench marks are on the Naval Base, near the County Courthouse, and along Front Street in downtown Key West. The tide gauge is located on the concrete sea wall near the north property line of the Naval Base. NOTE: A pass to enter the Naval Base must be obtained at the Boca Chica Naval Air Station.

White Street Pier , FL

Station ID: 8724557

Station Information

Latitude: **24° 32.7' N**
Longitude: **81° 47.0' W**
Established: **Aug 23 1974**
Date Removed: **Oct 3 1974**
NOAA Chart #: **11447**
Time Meridian: **75**

Mean Range: **1.41 ft.**
Diurnal Range: **1.93 ft.**

Data Types Available:

Location:

To reach the tidal bench marks from the intersection of Truman Avenue and White Street in Key West, proceed SE on White Street for 1.2 km (0.75 mi) to the pier at the foot of White Street. The bench marks are on the L shaped pier. The tide gage and staff were near the SE end of the pier.

MANNINGS "n" VALUES

Table T-2
Manning's n Values for Street and Pavement Gutters

Type of Gutter or Pavement	Range of Manning's n	
Concrete gutter, troweled finish	0.012	
Asphalt pavement:		
Smooth texture	0.013	
Rough texture	0.016	Use for Pavement
Concrete gutter with asphalt pavement:		
Smooth	0.013	Use this for composite section
Rough	0.015	
Concrete pavement:		
Float finish	0.014	
Broom finish	0.016	
For gutters with small slopes, where sediment may accumulate increase above values of n by	0.002	

Note: Estimates are by the Federal Highway Administration.

Reference: USDOT, FHWA, HDS-3 (1961)

When the outlet velocity for the design storm discharge exceeds 6 fps, the need for special channel lining and/or energy dissipation shall be considered for protection against undesirable scour. For computation of the outlet velocity, the lowest anticipated tailwater condition that can reasonably expected to occur during a storm event shall be assumed.

3.6.4 Manning's Roughness Coefficients

Values for Manning's roughness coefficient are as follows:

Concrete Box Culverts	n = 0.012
Concrete Pipes	n = 0.012

Metal Pipes:

Pipe and Pipe Arch - Helical Fabrication	
Re-corrugated Ends - All Flow Conditions*	
12" to 24"	n = 0.020
30" to 54"	n = 0.022
60" and larger	n = 0.024
Pipe and Pipe Arch - Spiral Rib Fabrication	
Re-corrugated Ends - All Flow Conditions*	
All Sizes	n = 0.012

Plastic Pipes:

Polyvinyl Chloride-PVC (external rib/smooth interior)	
All Sizes	n = 0.012
Polyethylene	
Single Wall	n = 0.024
Double Wall (Smooth)	n = 0.012

* "Spiral" flow will not occur for most design situations. Therefore "spiral" flow design values have not been established. Values recommended by the Southeast Corrugated Steel Pipe Association are contained in the AISI Handbook of Steel Drainage & Highway Construction Products.

IDF CURVES

ZONES FOR PRECIPITATION IDF CURVES DEVELOPED BY THE DEPARTMENT

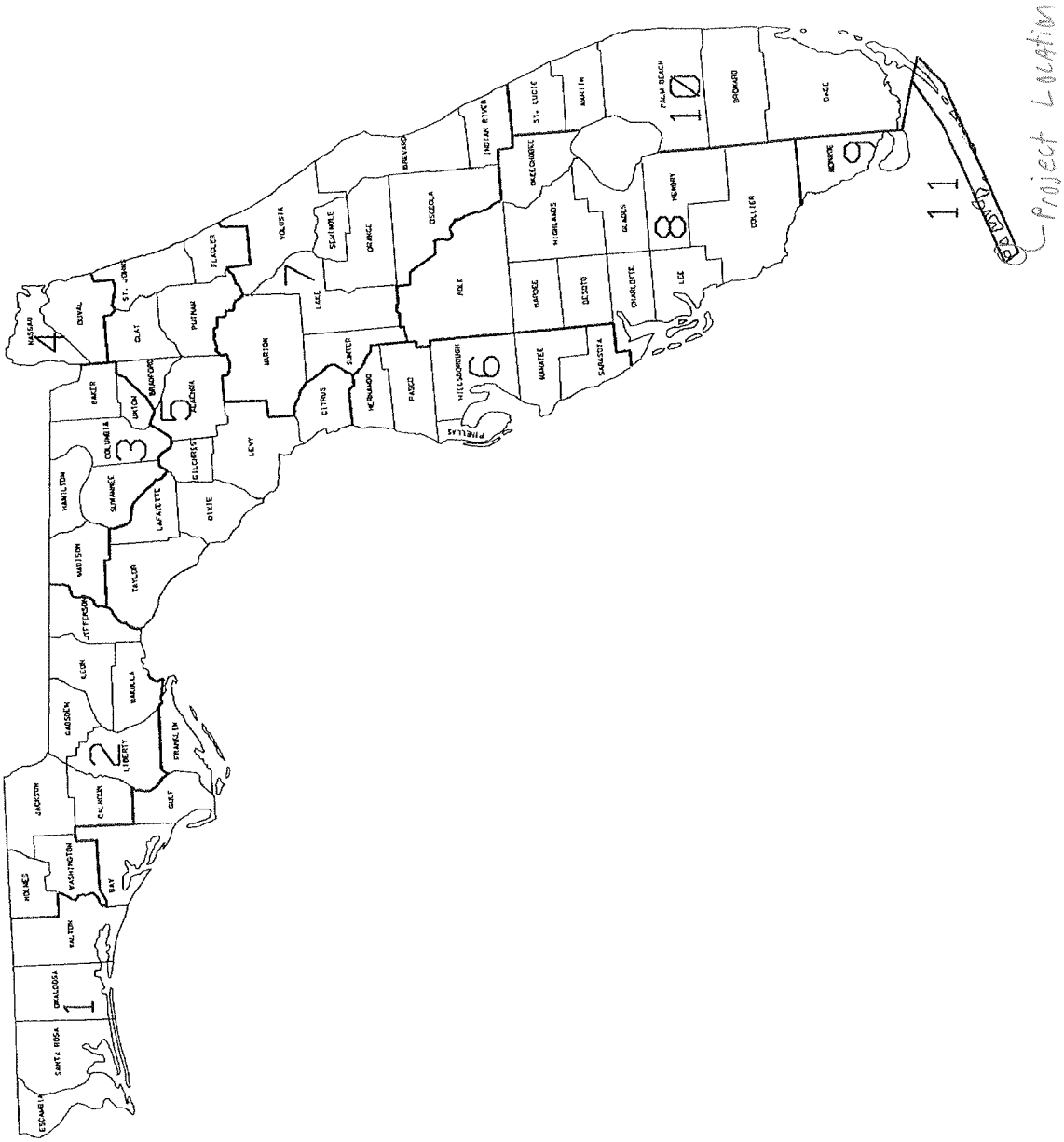

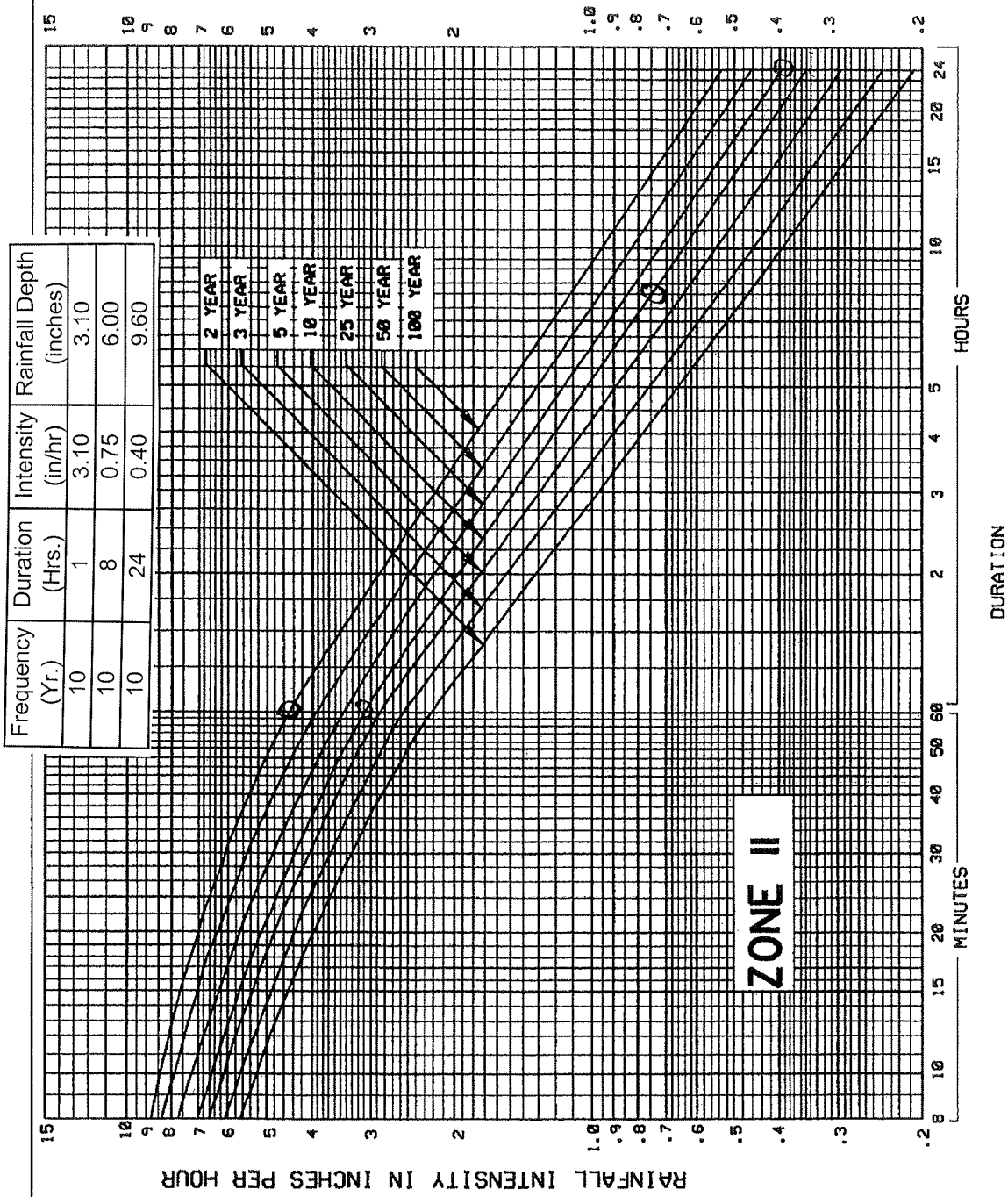

Frequency (Yr.)	Duration (Hrs.)	Intensity (in/hr)	Rainfall Depth (inches)
10	1	3.10	3.10
10	8	0.75	6.00
10	24	0.40	9.60

RAINFALL INTENSITY-DURATION-FREQUENCY CURVES
ZONE 11

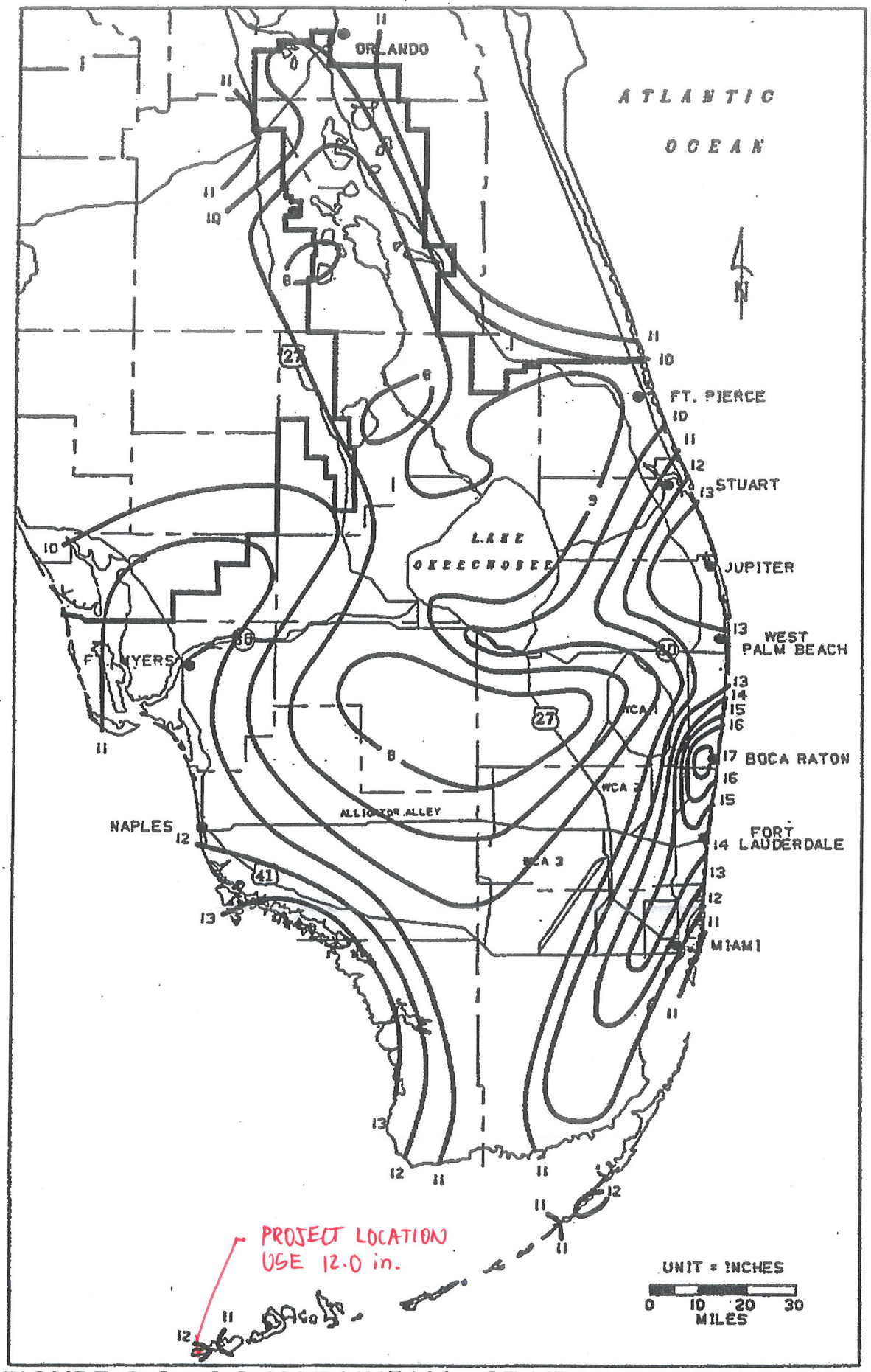

FIGURE C-8. 3-DAY RAINFALL: 25-YEAR RETURN PERIOD

RUNOFF COEFFICIENTS

Table T-4
Runoff Coefficients For A Design Storm Return Period Of 10 Years Or Less[a]

Slope	Land Use	Sandy Soils Min.	Sandy Soils Max.	Clay Soils Min.	Clay Soils Max.	
Flat (0-2%)	Woodlands	0.10	0.15	0.15	0.20	
	Pasture, grass, and farmland [b]	0.15	0.20	0.20	0.25	Use 0.20
	Bare Earth	0.30	0.50	0.50	0.60	
	Rooftops and pavement	0.95	0.95	0.95	0.95	
	Pervious pavements [c]	0.75	0.95	0.90	0.95	Use 0.95
	SFR: 1/2-acre lots and larger	0.30	0.35	0.35	0.45	
	Smaller lots	0.35	0.45	0.40	0.50	
	Duplexes	0.35	0.45	0.40	0.50	
	MFR: Apartments, townhouses, and condominiums	0.45	0.60	0.50	0.70	
	Commercial and Industrial	0.50	0.95	0.50	0.95	
Rolling (2-7%)	Woodlands	0.15	0.20	0.20	0.25	
	Pasture, grass, and farmland [b]	0.20	0.25	0.25	0.30	
	Bare Earth	0.40	0.60	0.60	0.70	
	Rooftops and pavement	0.95	0.95	0.95	0.95	
	Pervious pavements [c]	0.80	0.95	0.90	0.95	
	SFR: 1/2-acre lots and larger	0.35	0.50	0.40	0.55	
	Smaller lots	0.40	0.55	0.45	0.60	
	Duplexes	0.40	0.55	0.45	0.60	
	MFR: Apartments, townhouses, and condominiums	0.50	0.70	0.60	0.80	
	Commercial and Industrial	0.50	0.95	0.50	0.95	
Steep (7%+)	Woodlands	0.20	0.25	0.25	0.30	
	Pasture, grass, and farmland [b]	0.25	0.35	0.30	0.40	
	Bare Earth	0.50	0.70	0.70	0.80	
	Rooftops and pavement	0.95	0.95	0.95	0.95	
	Pervious pavements [c]	0.85	0.95	0.90	0.95	
	SFR: 1/2-acre lots and larger	0.40	0.55	0.50	0.65	
	Smaller lots	0.45	0.60	0.55	0.70	
	Duplexes	0.45	0.60	0.55	0.70	
	MFR: Apartments, townhouses, and condominiums	0.60	0.75	0.65	0.85	
	Commercial and Industrial	0.60	0.95	0.65	0.95	

[a] Weighted coefficient based on percentage of impervious surfaces and green areas must be selected for each site.

[b] Coefficients assume good ground cover and conservation treatment.

[c] Depends on depth and degree of permeability of underlying strata.

Note: SFR = Single Family Residential
MFR = Multi-Family Residential

SCS RUNOFF CURVE NUMBERS TABLE

Table T-6
Definitions Of Four SCS Hydrologic Soil Groups

Hydrologic Soil Group	Definition
A	Low Runoff Potential Soils having high infiltration rates even when thoroughly wetted, consisting chiefly of deep, well-to-excessively-drained sands or gravels. These soils have a high rate of water transmission.
B	Moderately Low Runoff Potential Soils having moderate infiltration rates when thoroughly wetted and consisting chiefly of moderately deep, to deep, moderately fine to moderately coarse textures. These soils have a moderate rate of water transmission.
C	Moderately High Runoff Potential Soils having slow infiltration rates when thoroughly wetted and consisting chiefly of soils with a layer that impedes downward movement of water, soils with moderate fine to fine texture, or soils with moderate water tables. These soils have a slow rate of water transmission.
Use "D" → D	High Runoff Potential Soils having very slow infiltration rates when thoroughly wetted and consisting chiefly of clay soils with high swelling potential, soils with a permanent high water table, soils with a clay pan or clay layer at or near the surface, and shallow soils over nearly impervious material. These soils have a very slow rate of water transmission.

Reference: USDA, SCS, NEH-4 (1972).

Table T-7
SCS Runoff Curve Numbers for Selected Agricultural, Suburban, and Urban Land Use

Land Use Description		Hydrologic Soil Group A	B	C	D	
Cultivated Land[a]:						
Without conservation treatment		72	81	88	91	
With conservation treatment		62	71	78	81	
Pasture or range land:						
Poor condition		68	79	86	89	
Good condition		39	61	74	80	← Use 80
Meadow: good condition		30	58	71	78	
Wood or Forest Land:						
Thin stand, poor cover, no mulch		45	66	77	83	
Good cover [b]		25	55	70	77	
Open Spaces, Lawns, Parks, Golf Courses, Cemeteries:						
Good condition: grass cover on 75% or more of the area		39	61	74	80	
Fair condition: grass cover on 50% to 75% of the area		49	69	79	84	
Poor condition: grass cover on 50% or less of the area		68	79	86	89	
Commercial and Business Areas (85% impervious)		89	92	94	95	
Industrial Districts (72% impervious)		81	88	91	93	
Residential [c]						
Average lot size	Average % Impervious [d]					
1/8 acre or less	65	77	85	90	92	
1/4 acre	38	61	75	83	87	
1/3 acre	30	57	72	81	86	
1/2 acre	25	54	70	80	85	
1 acre	20	51	68	79	84	
Paved Parking Lots, Roofs, Driveways [e]:		98	98	98	98	
Streets and Roads:						
Paved with curbs and storm sewers [e]		98	98	98	98	← Use 98
Gravel		76	85	89	91	
Dirt		72	82	87	89	
Paved with open ditches		83	89	92	93	
Newly graded area (no vegetation established)[f]		77	86	91	94	

[a] For a more detailed description of agricultural land use curve numbers, refer to Table T-8.
[b] Good cover is protected from grazing and litter and brush cover soil.
[c] Curve numbers are computed assuming the runoff from the house and driveway is directed toward the street with a minimum of roof water directed to lawns where additional infiltration could occur. Depends on depth and degree of permeability of underlying strata.
[d] The remaining pervious areas (lawn) are considered to be in good pasture condition for these curve numbers.
[e] In some warmer climates of the country, a curve number of 96 may be used.
[f] Use for temporary conditions during grading and construction.
Note: These values are for Antecedent Moisture Condition II, and $I_a = 0.2S$.

Reference: USDA, SCS, TR-55 (1984).

SOILS MAP

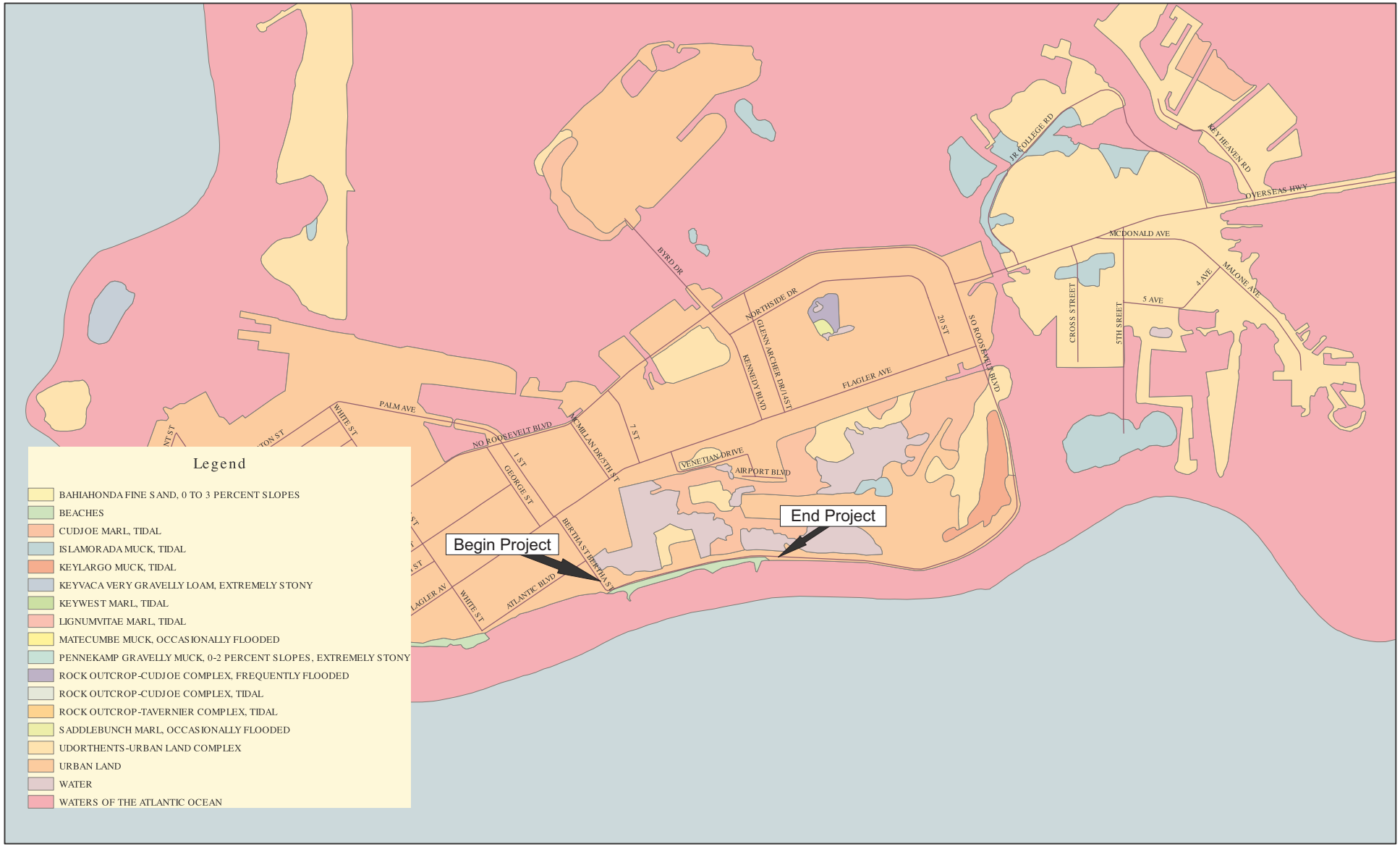
Legend
BAHIAHONDA FINE SAND, 0 TO 3 PERCENT SLOPES
BEACHES
CUDJOE MARL, TIDAL
ISLAMORADA MUCK, TIDAL
KEYLARGO MUCK, TIDAL
KEYVACA VERY GRAVELLY LOAM, EXTREMELY STONY
KEYWEST MARL, TIDAL
LIGNUMVITAE MARL, TIDAL
MATECUMBE MUCK, OCCASIONALLY FLOODED
PENNEKAMP GRAVELLY MUCK, 0-2 PERCENT SLOPES, EXTREMELY STONY
ROCK OUTCROP-CUDJOE COMPLEX, FREQUENTLY FLOODED
ROCK OUTCROP-CUDJOE COMPLEX, TIDAL
ROCK OUTCROP-TAVERNIER COMPLEX, TIDAL
SADDLEBUNCH MARL, OCCASIONALLY FLOODED
UDORTHENTS-URBAN LAND COMPLEX
URBAN LAND
WATER
WATERS OF THE ATLANTIC OCEAN
Begin Project
End Project
BYRD DR
NORTHSIDE DR
GLENN ARCHER DR/14ST
KENNEDY BLVD
20 ST
SO ROOSEVELT BLVD
FLAGLER AVE
JR COLLEGE RD
KEY HEAVEN RD
OVERSEAS HWY
MCDONALD AVE
MALONE AVE
4 AVE
5 AVE
CROSS STREET
5TH SREET
PALM AVE
WHITE ST
NO ROOSEVELT BLVD
N MILAN DR/5TH ST
7 ST
1 ST
GEORGE ST
VENETIAN DRIVE
AIRPORT BLVD
BERTHA ST/BERTHA ST
ATLANTIC BLVD
WHITE ST

QUADRANGLE MAP

STATE OF FLORIDA

KEY WEST QUADRANGLE
FLORIDA–MONROE CO.
7.5 MINUTE SERIES ORTHOPHOTOMAP (TOPOGRAPHIC)

ROAD CLASSIFICATION

Primary highway, hard surface
Light-duty road, hard or improved surface
Secondary highway, hard surface
Unimproved road
Trails
Interstate Route
U. S. Route
State Route

KEY WEST, FLA.
N2430—W8145/7.5
1971
AMS 4633 III SE—SERIES V847

SCALE 1:24 000

1 MILE
7000 FEET
1 KILOMETER

CONTOUR INTERVAL 5 FEET
NATIONAL GEODETIC VERTICAL DATUM OF 1929
DEPTH CURVES AND SOUNDINGS IN FEET—DATUM IS MEAN LOW WATER
THE MEAN RANGE OF TIDE IS APPROXIMATELY 1.3 FEET

THIS MAP COMPLIES WITH NATIONAL MAP ACCURACY STANDARDS
FOR SALE BY U. S. GEOLOGICAL SURVEY
DENVER, COLORADO 80225, OR RESTON, VIRGINIA 22092
A FOLDER DESCRIBING TOPOGRAPHIC MAPS AND SYMBOLS IS AVAILABLE ON REQUEST

engineering

QUADRANGLE MAP

LAND USE MAP

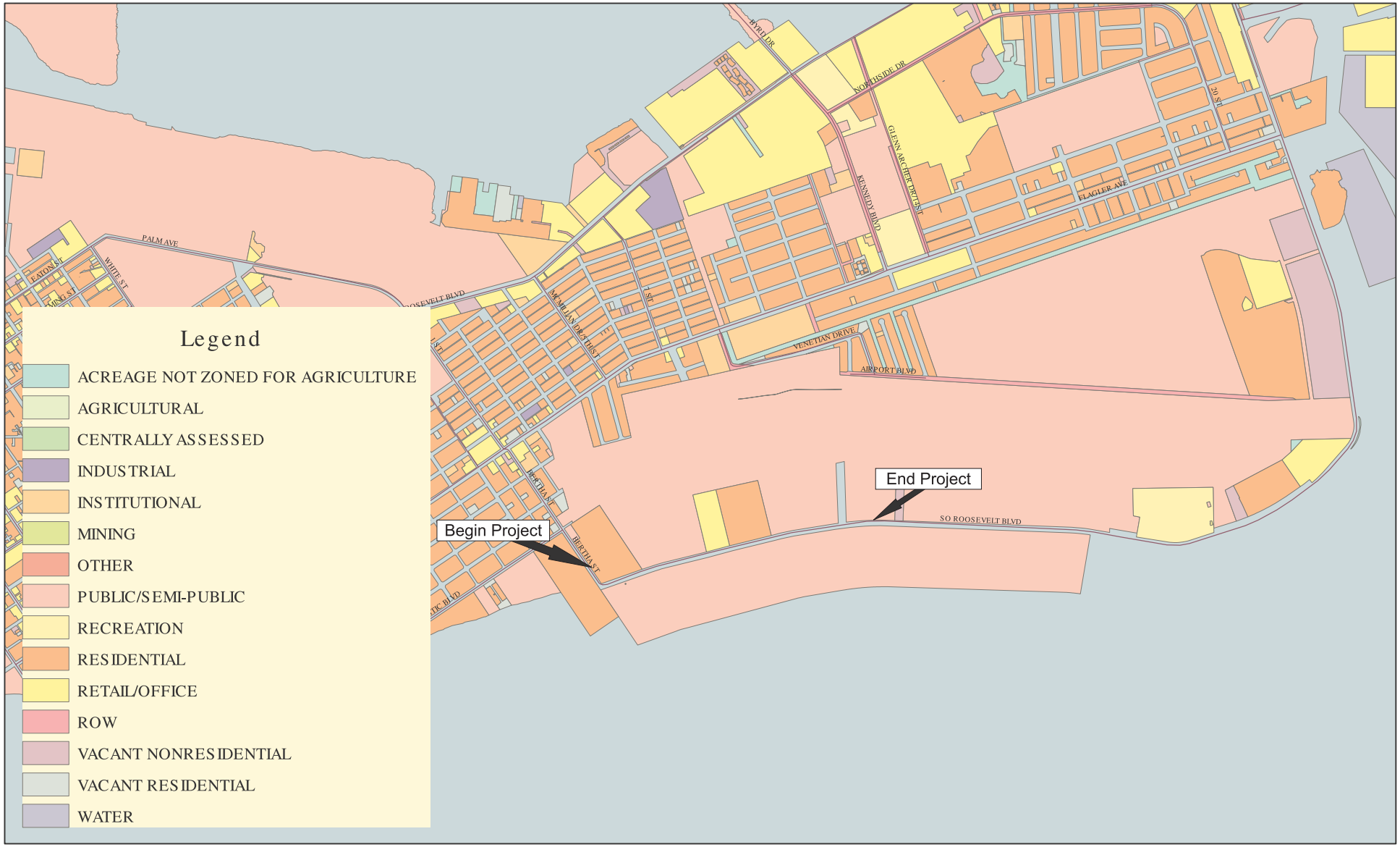
Legend
ACREAGE NOT ZONED FOR AGRICULTURE
AGRICULTURAL
CENTRALLY ASSESSED
INDUSTRIAL
INSTITUTIONAL
MINING
OTHER
PUBLIC/SEMI-PUBLIC
RECREATION
RESIDENTIAL
RETAIL/OFFICE
ROW
VACANT NONRESIDENTIAL
VACANT RESIDENTIAL
WATER
Begin Project
End Project
PALM AVE
WHITE ST
EATON ST
BYRD DR
NORTHSIDE DR
GLENN ARCHER DR EAST
KENNEDY BLVD
FLAGLER AVE
20 ST
VENETIAN DRIVE
AIRPORT BLVD
MC MILLAN DR EAST
BERTHA ST
SO ROOSEVELT BLVD

APPENDIX 2

DRAINAGE MAPS

PRE-DEVELOPMENT DRAINAGE MAPS

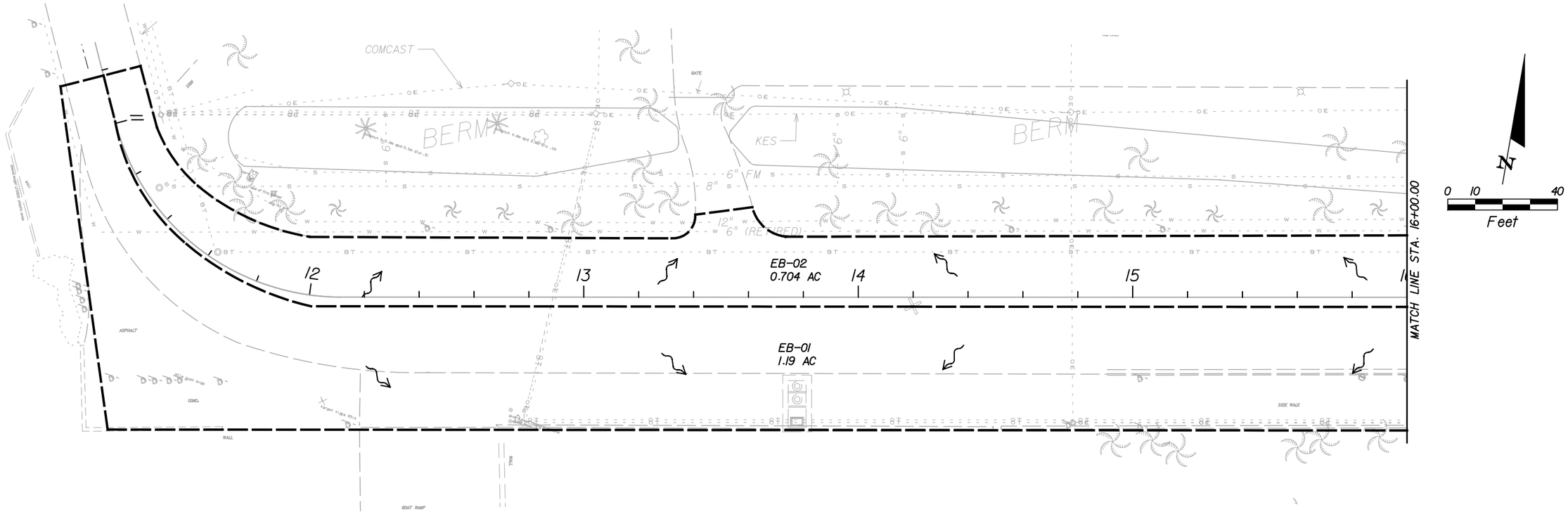

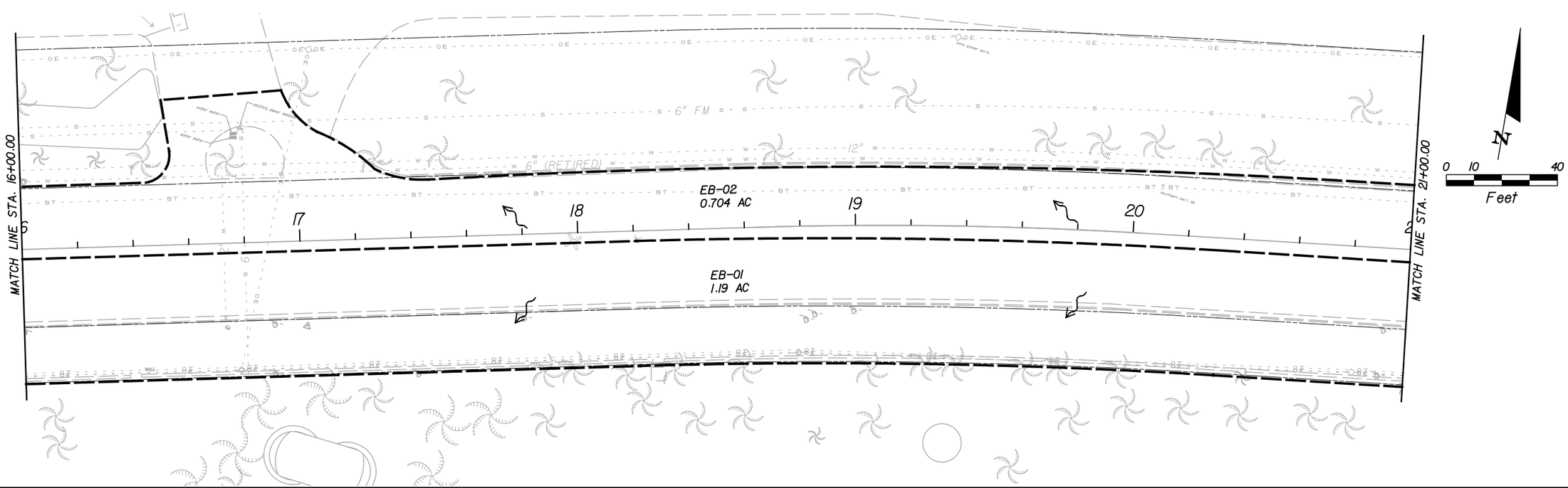

REVISIONS					
DATE	BY	DESCRIPTION	DATE	BY	DESCRIPTION

bcc engineering

Ariel Millan
P.E. License No. 54572
7300 North Kendall Dr, Suite 660
Miami, Florida 33156
Phone: (305) 670-2350
Fax: (305) 670-2351
Certificate of Authorization No. 7184

STATE OF FLORIDA
DEPARTMENT OF TRANSPORTATION

ROAD NO.	COUNTY	FINANCIAL PROJECT ID
SR AIA	MONROE	250548-4-52-01

PRE DEVELOPMENT DRAINAGE MAPS

SHEET NO. 4

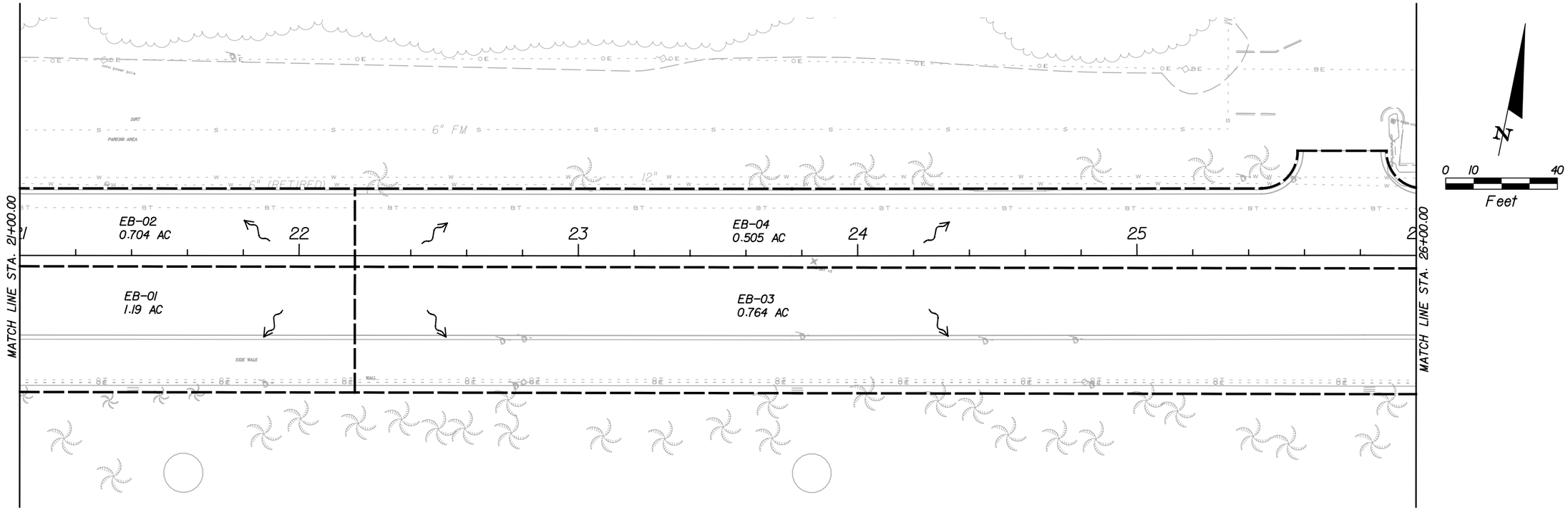

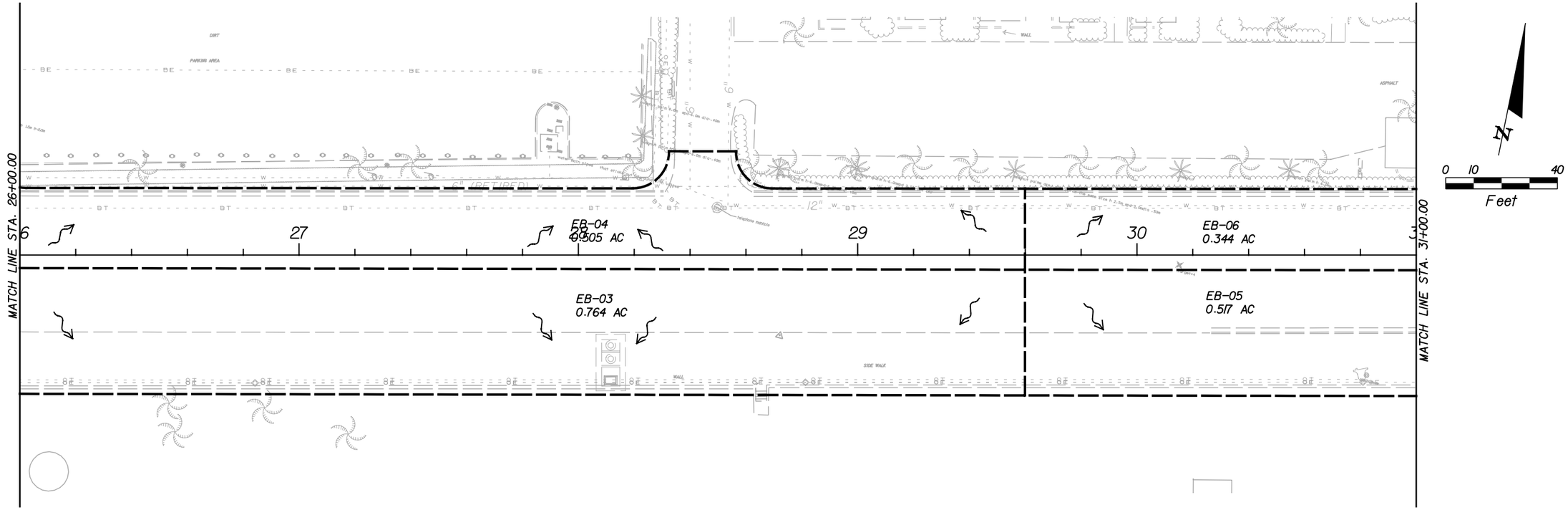

REVISIONS					
DATE	BY	DESCRIPTION	DATE	BY	DESCRIPTION

bac engineering

Ariel Millan
P.E. License No. 54572
7300 North Kendall Dr. Suite 660
Miami, Florida 33156
Phone: (305) 670-2350
Fax: (305) 670-2351
Certificate of Authorization No. 7184

STATE OF FLORIDA
DEPARTMENT OF TRANSPORTATION

ROAD NO.	COUNTY	FINANCIAL PROJECT ID
SR AIA	MONROE	250548-4-52-01

PRE DEVELOPMENT DRAINAGE MAPS

SHEET NO. 5

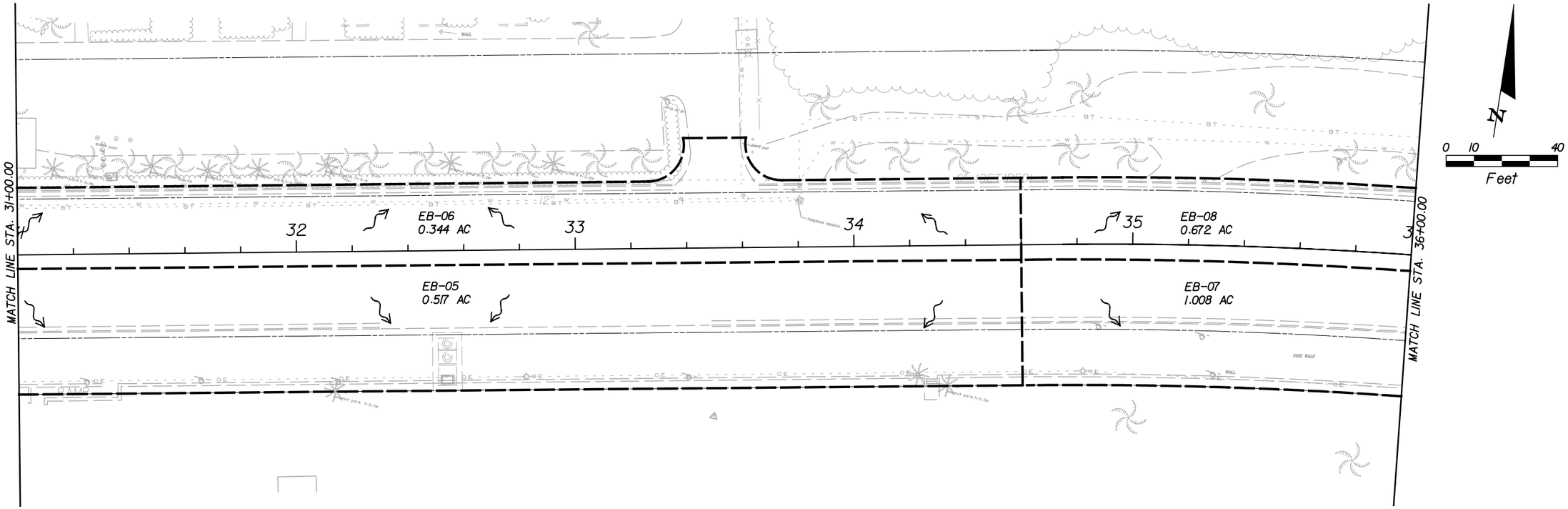

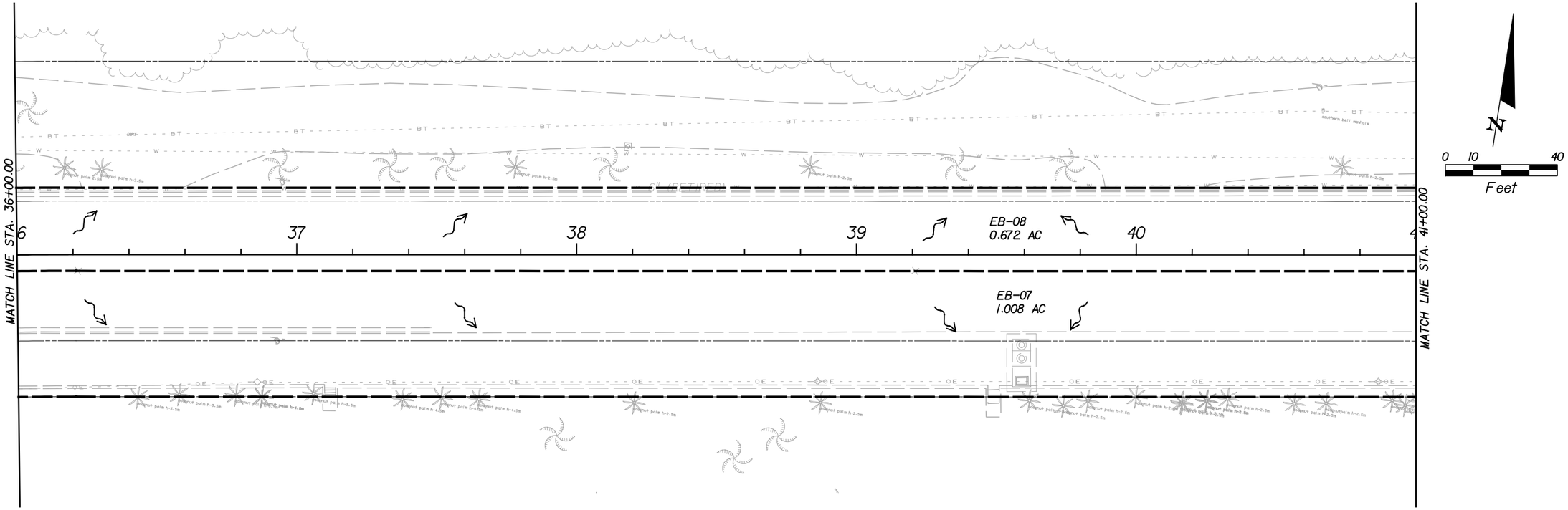

REVISIONS					
DATE	BY	DESCRIPTION	DATE	BY	DESCRIPTION

bac engineering

Ariel Millan
P.E. License No. 54572
7300 North Kendall Dr, Suite 660
Miami, Florida 33156
Phone: (305) 670-2350
Fax: (305) 670-2351
Certificate of Authorization No. 7184

STATE OF FLORIDA
DEPARTMENT OF TRANSPORTATION

ROAD NO.	COUNTY	FINANCIAL PROJECT ID
SR AIA	MONROE	250548-4-52-01

PRE DEVELOPMENT DRAINAGE MAPS

SHEET NO. 6

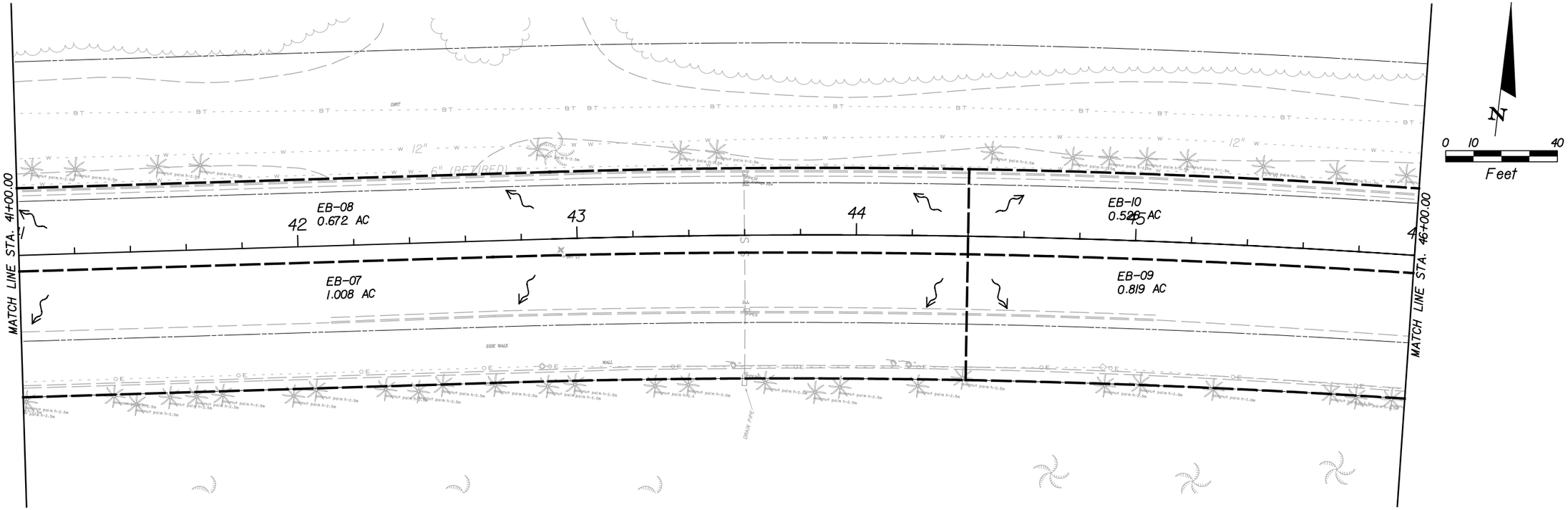

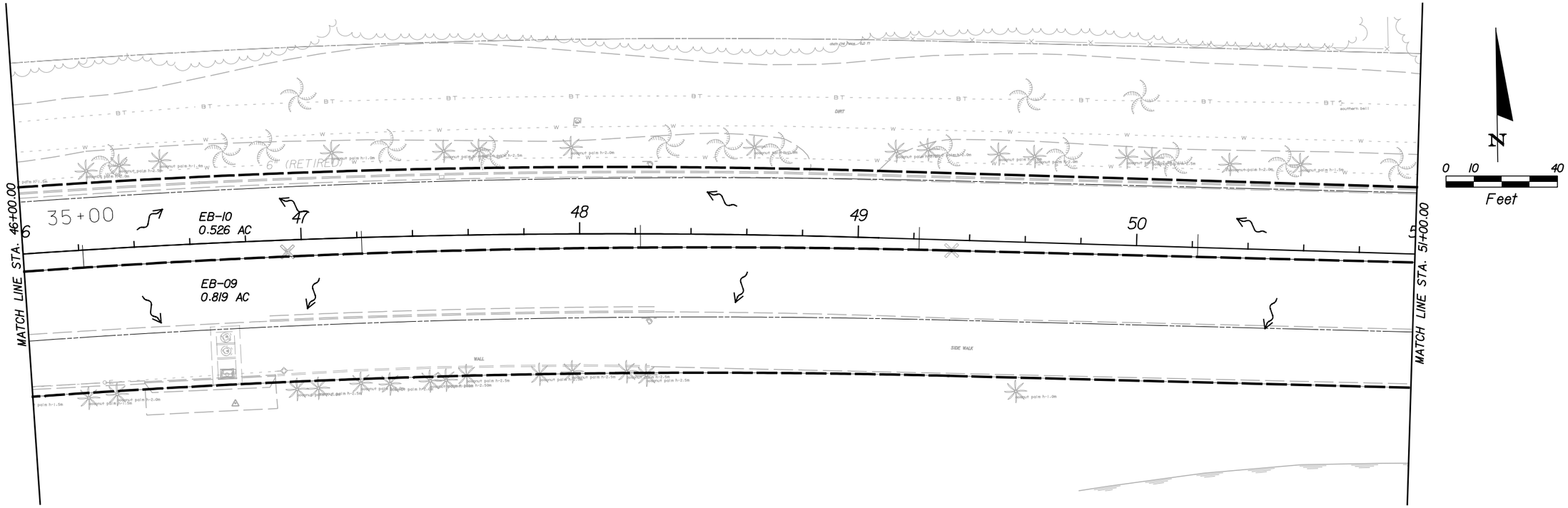

REVISIONS					
DATE	BY	DESCRIPTION	DATE	BY	DESCRIPTION

bcc engineering

Ariel Millan
P.E. License No. 54572
7300 North Kendall Dr, Suite 660
Miami, Florida 33156
Phone: (305) 670-2350
Fax: (305) 670-2351
Certificate of Authorization No. 7184

STATE OF FLORIDA
DEPARTMENT OF TRANSPORTATION

ROAD NO.	COUNTY	FINANCIAL PROJECT ID
SR AIA	MONROE	250548-4-52-01

PRE DEVELOPMENT DRAINAGE MAPS

SHEET NO. 7

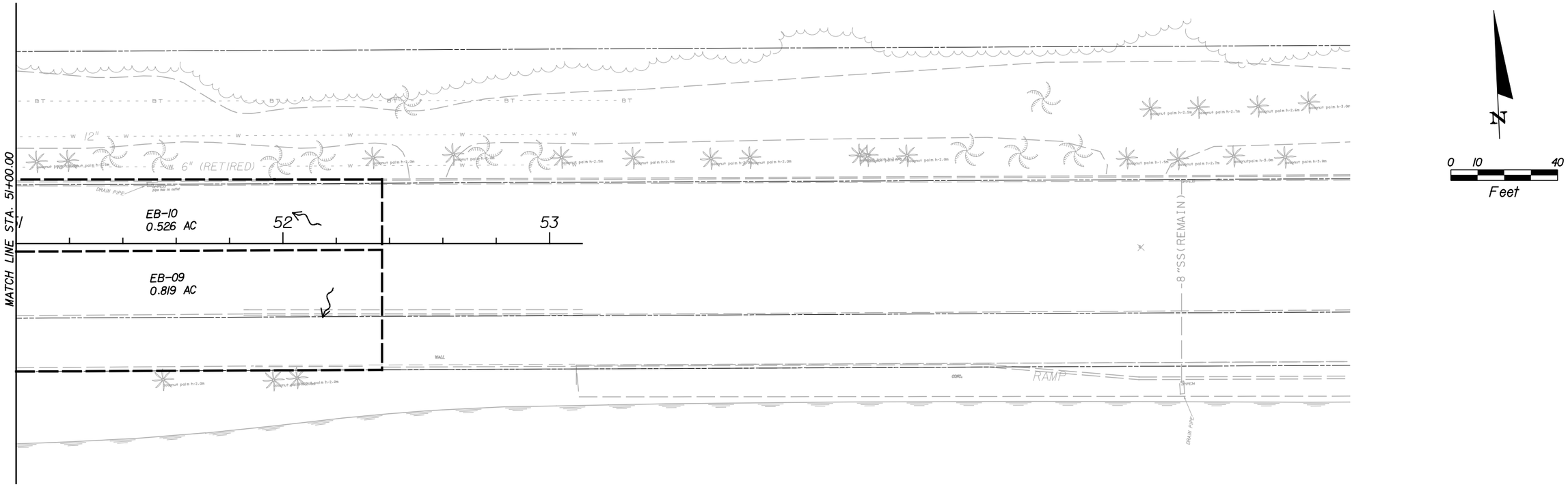

BLANK ON PURPOSE

REVISIONS					
DATE	BY	DESCRIPTION	DATE	BY	DESCRIPTION

bac engineering

Ariel Millan
P.E. License No. 54572
7300 North Kendall Dr, Suite 660
Miami, Florida 33156
Phone: (305) 670-2350
Fax: (305) 670-2351
Certificate of Authorization No. 7184

STATE OF FLORIDA
DEPARTMENT OF TRANSPORTATION

ROAD NO.	COUNTY	FINANCIAL PROJECT ID
SR AIA	MONROE	250548-4-52-01

PRE DEVELOPMENT DRAINAGE MAPS

SHEET NO. 8

POST DEVELOPMENT DRAINAGE MAPS

BCC Project No.:	60851.00
Date:	12/2/2015
Calculate By:	J.R.
Checked By:	A.R.

LAND USE

Basin No.	Structure No.	Area		Tc (Min)	CN
		sf.	Ac.		
B-01*	S-01	9,409	0.216	10	98
B-02*	S-02	4,835	0.111	10	98
B-03	S-03	4,574	0.105	10	98
B-04	S-04	5,009	0.115	10	98
B-05	S-05	2,875	0.066	10	98
B-06	S-06	3,354	0.077	10	98
B-06A	S-06A	2,047	0.047	10	98
B-07	S-07	8,102	0.186	10	98
B-08	S-08	5,227	0.120	10	98
B-09	S-09	12,153	0.279	10	98
B-10	S-10	12,632	0.290	10	98
B-11	S-11	2,919	0.067	10	98
B-12	S-12	6,534	0.150	10	98
B-12A	S-12A	4,356	0.100	10	98
B-13	S-13	6,345	0.146	10	98
B-14	S-14	8,325	0.191	10	98
B-15	S-15	5,097	0.117	10	98
B-16	S-16	17,307	0.397	10	98
B-17	S-17	7,797	0.179	10	98
B-17A	S-17A	5,227	0.120	10	98
B-18	S-18	6,185	0.142	10	98
B-19	S-19	8,723	0.200	10	98
B-20	S-20	4,588	0.105	10	98
B-21	S-21	13,517	0.310	10	98
B-22	S-22	9,531	0.219	10	98
B-23	S-23	5,514	0.127	10	98
B-24	S-24	6,019	0.138	10	98
B-25	S-25	12,589	0.289	10	98
B-26	S-26	12,016	0.276	10	98
B-27	S-27	6,601	0.152	10	98
B-28	S-28	6,094	0.140	10	98
B-29	S-29	12,694	0.291	10	98
B-30	S-30	12,001	0.276	10	98
B-31	S-31	6,627	0.152	10	98
B-32	S-32	8,640	0.198	10	98
B-33	S-33	12,633	0.290	10	98
B-34	S-34	13,578	0.312	10	98
B-35	S-35	7,049	0.162	10	98
B-36	S-36	5,158	0.118	10	98
B-37	S-37	8,942	0.205	10	98
B-38	S-38	7,040	0.162	10	98
Total		**310,455**	**7.127**	**10**	**98**

* Basins B-01 & B-02 each include an additional 2100 SF, .048 AC, of area beyond the project limits assumed to drain into B-01 and B-02

Note: All areas within the project limist consist of impervious surfaces.

CN Imp. = 98

CN Perv. = 80

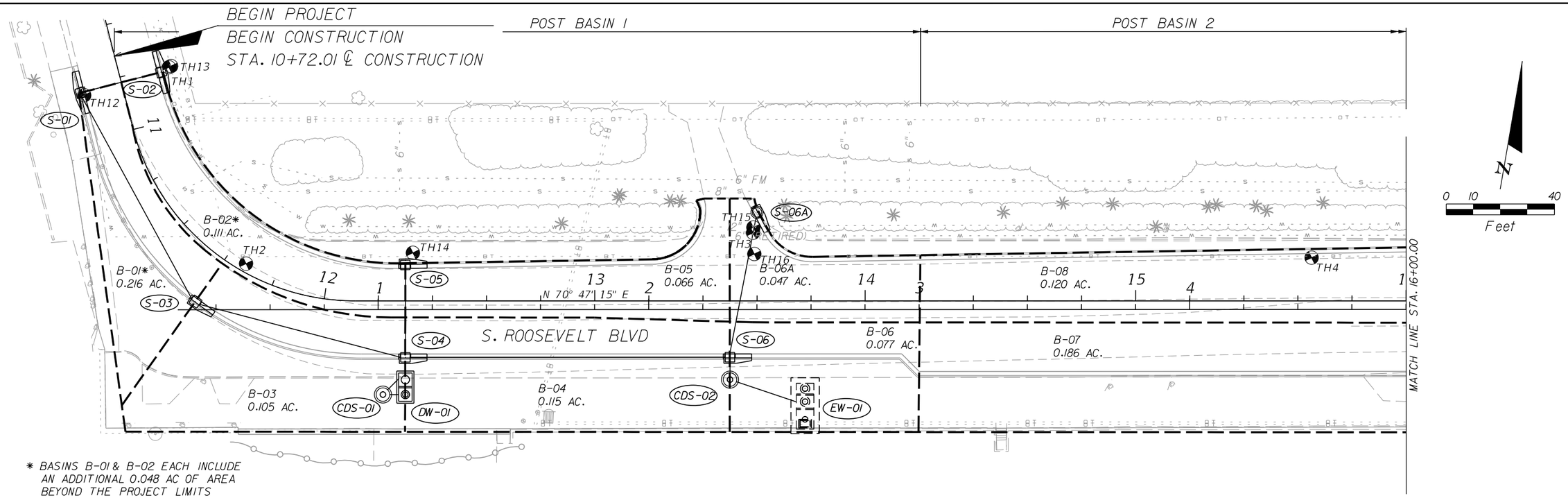

* BASINS B-01 & B-02 EACH INCLUDE AN ADDITIONAL 0.048 AC OF AREA BEYOND THE PROJECT LIMITS

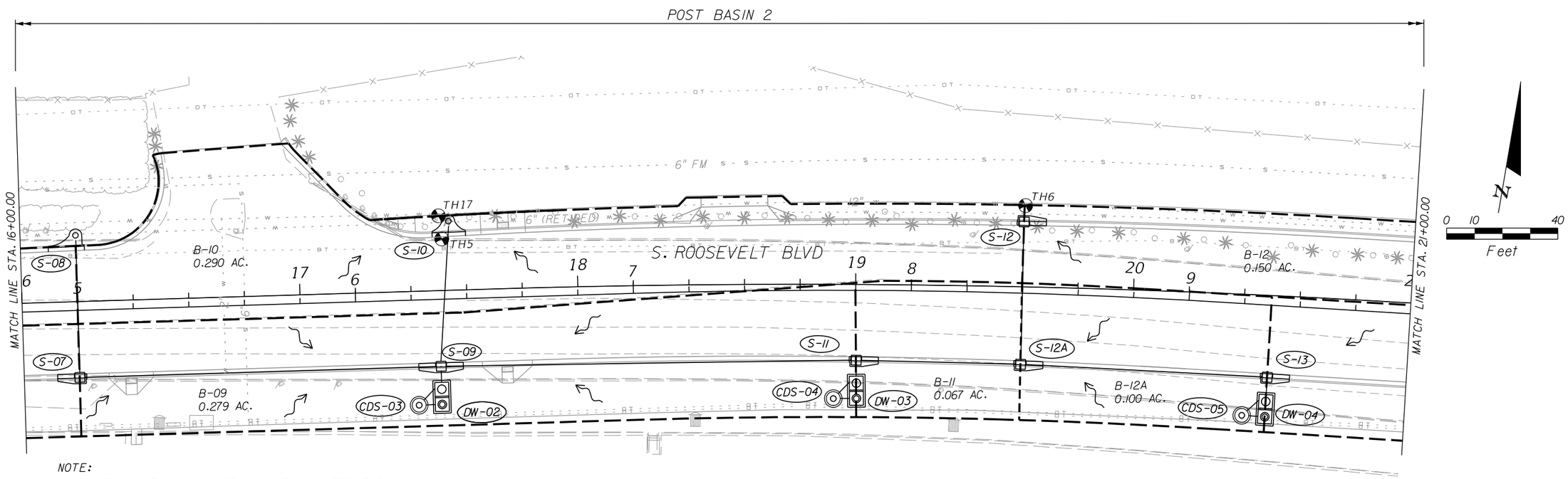

NOTE:

1. DO NOT USE THE INFORMATION ON THIS SHEET FOR CONSTRUCTION PURPOSES. THIS SHEET IS IN THE PLANS FOR DOCUMENTATION AND TO ASSIST CONSTRUCTION PERSONNEL WITH DRAINAGE CONCERNS.

REVISIONS			
DATE	DESCRIPTION	DATE	DESCRIPTION

BCC Engineering, Inc.
Luis A. Rodriguez
P.E. License No. 63983
7300 N Kendall Drive, Suite 400. Miami, Florida 33156
Phone: (305) 670-2350 Fax: (305) 670-2351
Certificate of Authorization No. 7184

STATE OF FLORIDA
DEPARTMENT OF TRANSPORTATION

ROAD NO.	COUNTY	FINANCIAL PROJECT ID
SR A1A	MONROE	250548-8-52-01

DRAINAGE MAPS POST-DEVELOPMENT

SHEET NO. 4

$USER$ $DATE$ $TIME$ $FILE$

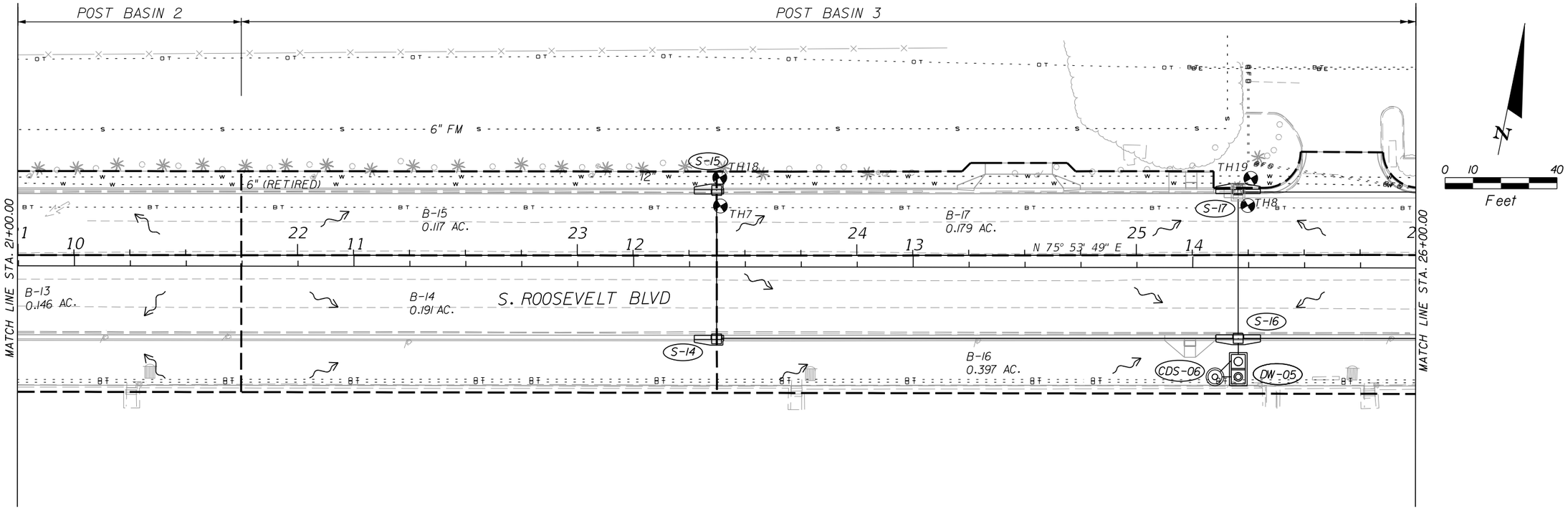

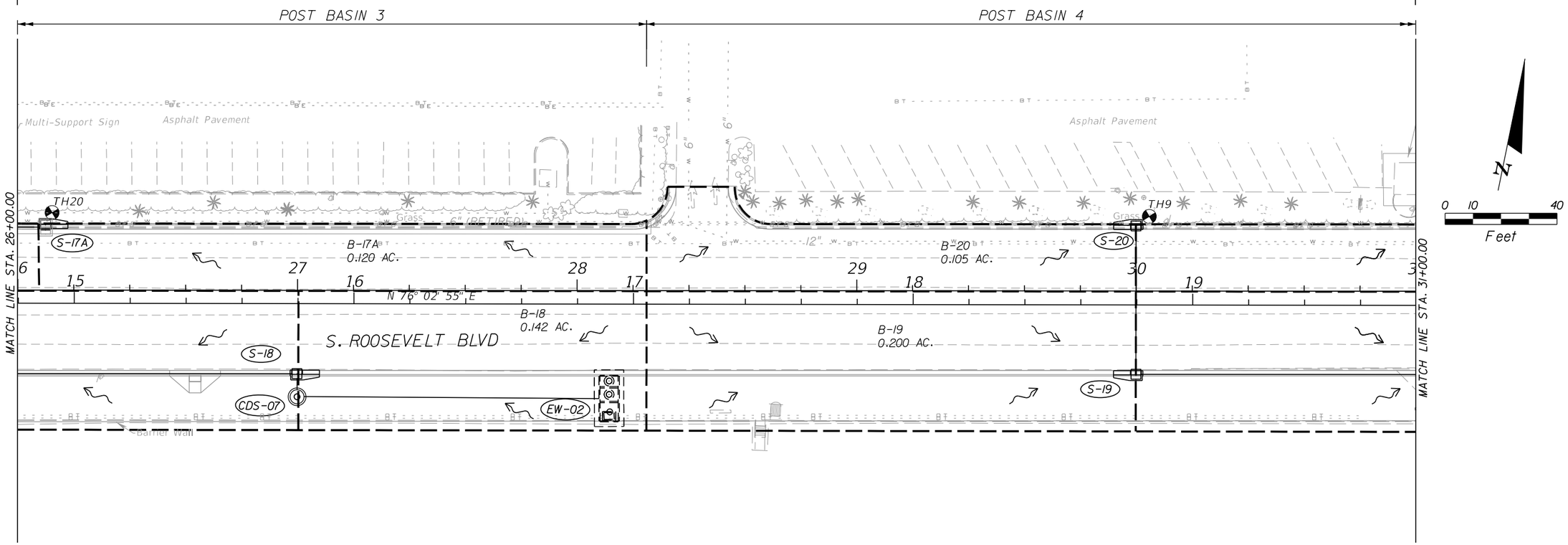

REVISIONS			
DATE	DESCRIPTION	DATE	DESCRIPTION

BCC Engineering, Inc.
Luis A. Rodriguez
P.E. License No. 63983
7300 N Kendall Drive, Suite 400. Miami, Florida 33156
Phone: (305) 670-2350 Fax: (305) 670-2351
Certificate of Authorization No. 7184

STATE OF FLORIDA
DEPARTMENT OF TRANSPORTATION

ROAD NO.	COUNTY	FINANCIAL PROJECT ID
SR A1A	MONROE	250548-8-52-01

DRAINAGE MAPS
POST-DEVELOPMENT

SHEET NO.
5

$USER$ $DATE$ $TIME$ $FILE$

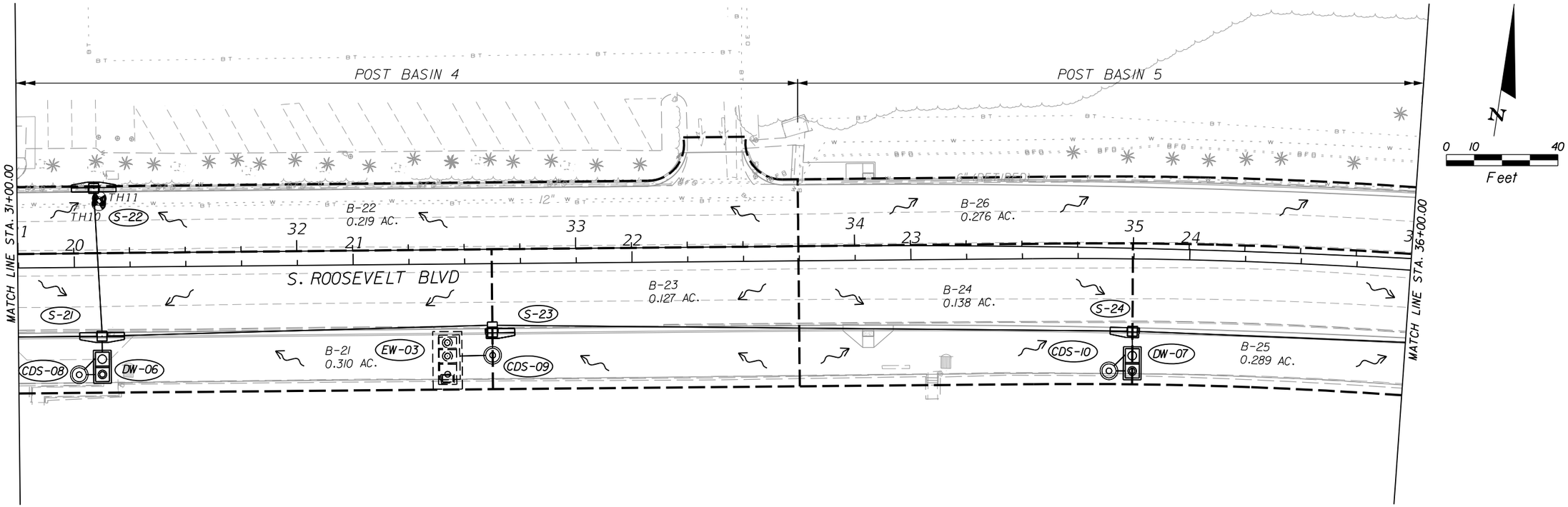

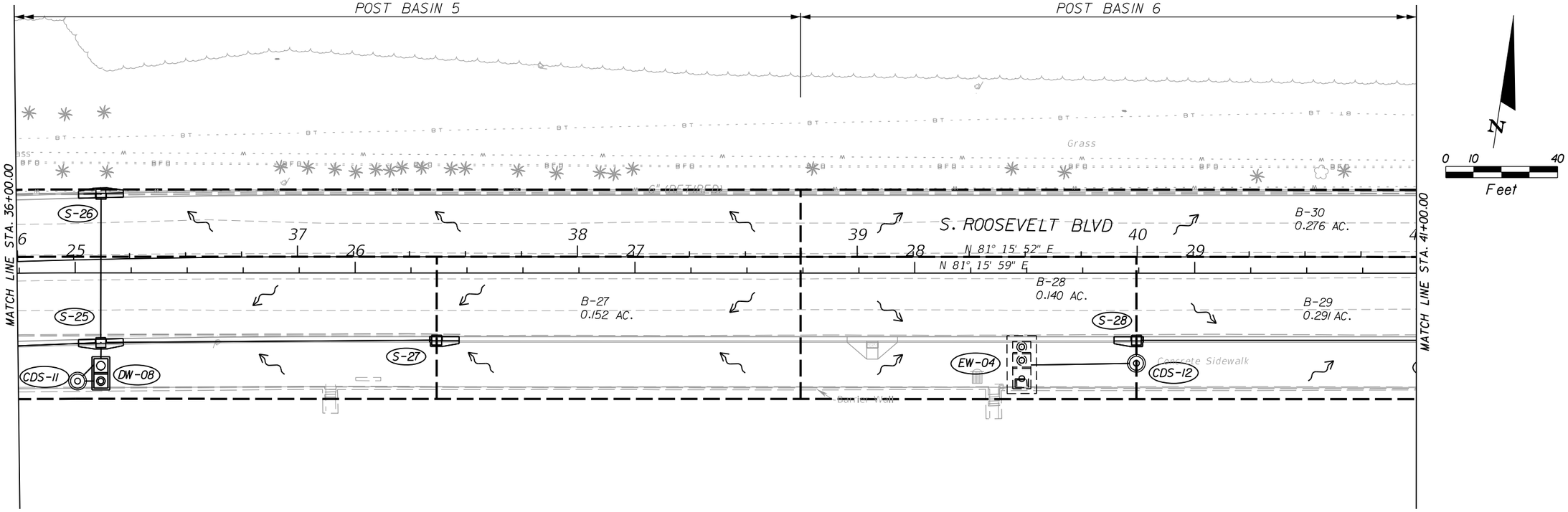

REVISIONS			
DATE	DESCRIPTION	DATE	DESCRIPTION

BCC Engineering, Inc.
Luis A. Rodriguez
P.E. License No. 63983
7300 N Kendall Drive, Suite 400. Miami, Florida 33156
Phone: (305) 670-2350 Fax: (305) 670-2351
Certificate of Authorization No. 7184

STATE OF FLORIDA
DEPARTMENT OF TRANSPORTATION

ROAD NO.	COUNTY	FINANCIAL PROJECT ID
SR A1A	MONROE	250548-8-52-01

DRAINAGE MAPS
POST-DEVELOPMENT

SHEET NO.
6

$USER$ $DATE$ $TIME$ $FILE$

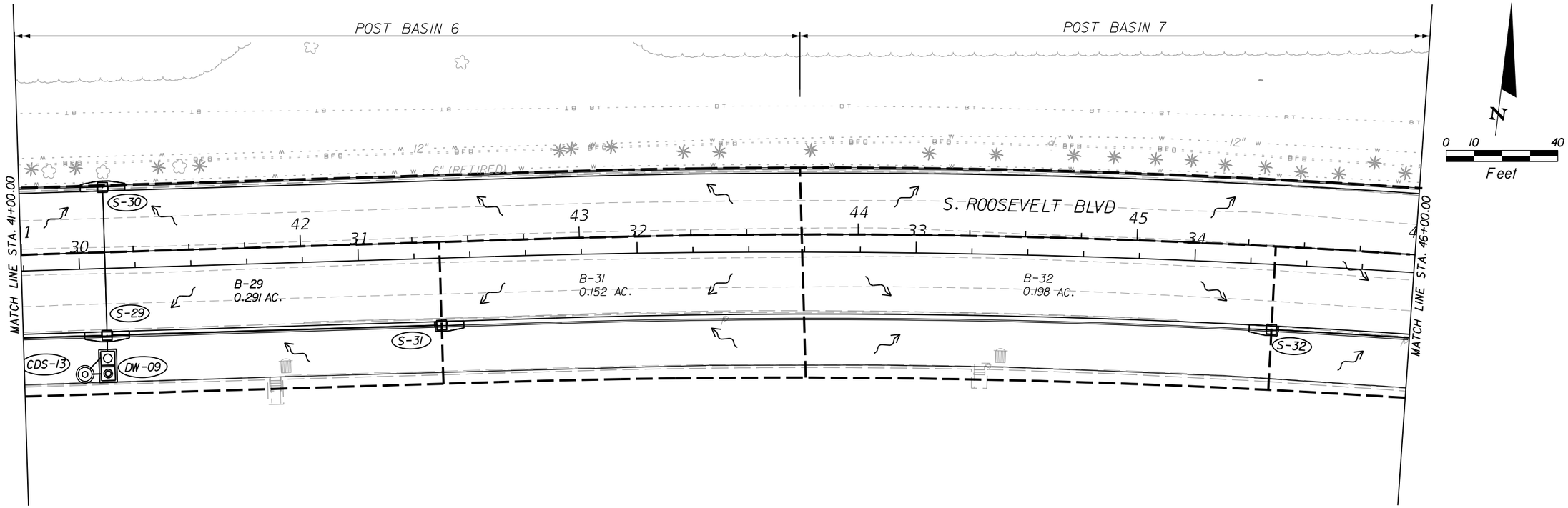

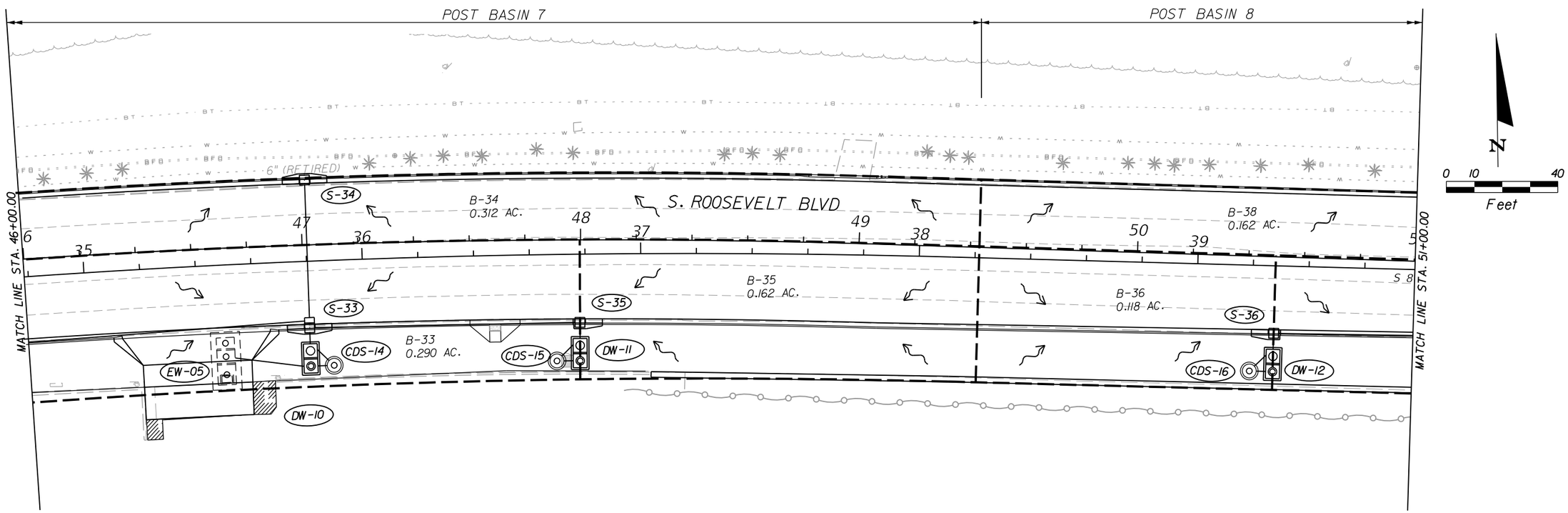

REVISIONS			
DATE	DESCRIPTION	DATE	DESCRIPTION

BCC Engineering, Inc.
Luis A. Rodriguez
P.E. License No. 63983

7300 N Kendall Drive, Suite 400. Miami, Florida 33156
Phone: (305) 670-2350 Fax: (305) 670-2351
Certificate of Authorization No. 7184

STATE OF FLORIDA
DEPARTMENT OF TRANSPORTATION

ROAD NO.	COUNTY	FINANCIAL PROJECT ID
SR A1A	MONROE	250548-8-52-01

DRAINAGE MAPS
POST-DEVELOPMENT

SHEET NO.
7

$USER$ $DATE$ $TIME$ $FILE$

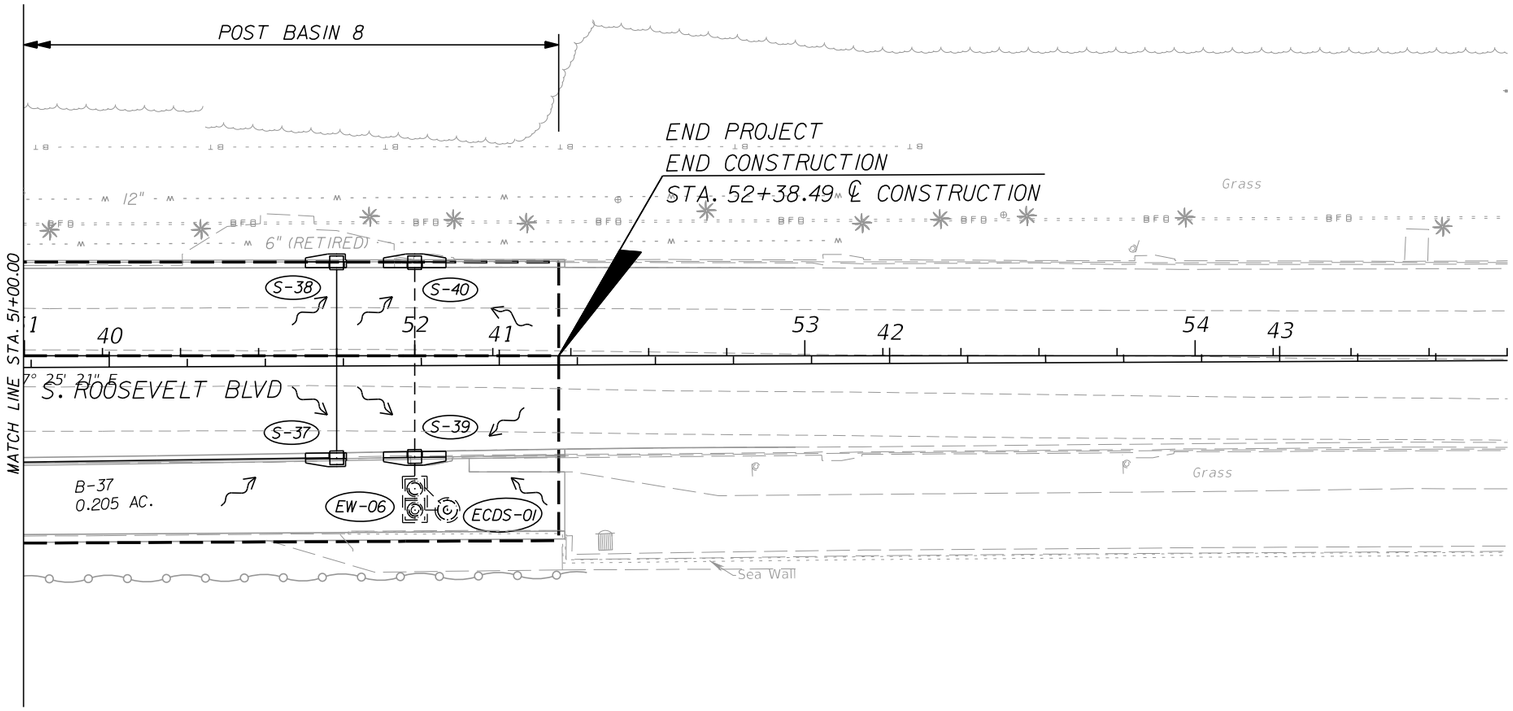

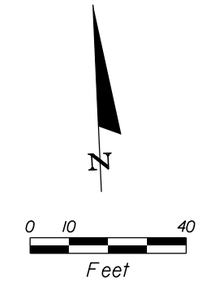

BLANK ON PURPOSE

REVISIONS			
DATE	DESCRIPTION	DATE	DESCRIPTION

BCC Engineering, Inc.
Luis A. Rodriguez
P.E. License No. 63983
7300 N Kendall Drive, Suite 400. Miami, Florida 33156
Phone: (305) 670-2350 Fax: (305) 670-2351
Certificate of Authorization No. 7184

STATE OF FLORIDA
DEPARTMENT OF TRANSPORTATION

ROAD NO.	COUNTY	FINANCIAL PROJECT ID
SR A1A	MONROE	250548-8-52-01

DRAINAGE MAPS
POST-DEVELOPMENT

SHEET NO.
8

$USER$ $DATE$ $TIME$ $FILE$

APPENDIX 3

WATER QUALITY CALCULATIONS

South Roosevelt BLVD
Key West, FL

System	Structure ID	Treatment Capacity (cfs)	Treatment Flow* (cfs)	CDS Model	Net Annual TSS Removal
1	CDS-1	1.1	1.77	CDS2020-5-C	80%
	CDS-2	1.1		CDS2020-5-C	80%
2	CDS-3	1.1	2.71	CDS2020-5-C	80%
	CDS-4	1.1		CDS2020-5-C	80%
	CDS-5	1.1		CDS2020-5-C	80%
3	CDS-6	1.6	2.30	CDS2025-5-C	80%
	CDS-7	1.1		CDS2020-5-C	80%
4	CDS-8	1.6	3.80	CDS2025-5-C	80%
	CDS-9	1.1		CDS2020-5-C	80%
	CDS-10	1.6		CDS2025-5-C	80%
	CDS-11	1.6		CDS2025-5-C	80%
5	CDS-12	1.1	1.80	CDS2020-5-C	80%
	CDS-13	1.6		CDS2025-5-C	80%
6	CDS-14	1.6	2.01	CDS2025-5-C	80%
	CDS-15	1.1		CDS2020-5-C	80%
7	CDS-16	1.6	1.02	CDS2025-5-C	80%

*Treatment Flow determined by using the Peak Discharge method to calculate the flowrate associated with 2.5 inches of runoff over the impervious area.

CDS Type	**Quantity**
CDS2020-5-C	9
CDS2025-5-C	7
Total	**16**

APPENDIX 4

SPREAD CALCULATIONS

3.8 GRADES

3.8.1 Longitudinal Gutter Grade

The minimum longitudinal gutter grade is 0.3 per cent.

3.9 SPREAD STANDARDS

The spread resulting from a rainfall intensity of 4.0 inches per hour shall be limited as follows.

Typical Section Condition	Design Speed (mph)	Spread Criteria*
Parking Lane or Full Width Shoulders	All	No encroachment
All Other	Design speed ≤ 45	Keep ½ of lane clear
	45 < Design Speed ≤ 55	Keep 8' of lane clear
	Design Speed > 55	No encroachment

SOUTH SIDE

NORTH SIDE

*The criteria in this column applies to travel, turn, or auxiliary lanes adjacent to barrier wall or curb, in normal or superelevated sections.

In addition to the above standards, for sections with a shoulder gutter, the spread resulting from a 10-year frequency storm shall not exceed 1' 3" outside the gutter in the direction toward the front slope. This distance limits the spread to the face of guardrail posts. See Figure 3-2.

3.10 CONSTRUCTION AND MAINTENANCE CONSIDERATIONS

The design of storm drain systems shall be consistent with the standard construction and maintenance practices of the Department. Standard details for inlets, manholes, junction boxes, end treatments, and other miscellaneous drainage details are provided in the standard index drawings. Specifications are provided in the Standard Specifications for Road and Bridge Construction. In the event standard index drawings are not suitable for a

BCC Project No.	60851.00
Date:	March-07
Calculated By:	E.N.
Checked By:	L.R.

S. Roosevelt Blvd.

1.0 PROJECT INFORMATION

FEMA Flood Elevation (Zone AH)		13		
3-Year 1 Day Return		5	3 Day	6.80
25-Year 1 Day Return		9	3 Day	12.23
Runoff Coefficients (C)	Impervious	0.95		
	Pervious	0.25		
Mean High Water Level (ft)		1.1		
Mean Sea Level (Ft)		0.5		
Manning's "n" values	Concrete	0.012		
	Asphalt	0.016		
Rainfall Intensity (in/Hr)		4		

2.0 SITE DATA

Impervious Area

Section 1 (North Side)	**Width**	**Section 2 (South Side)**	**Width**
Sidewalk	0	Sidewalk	16
Curb and Gutter	2	Curb and Gutter	2
Travel Lane	22	Travel Lane	22
Guardrail	0	Parking Lane	6
Median	0	Median	0
Total Width	**24**	**Total Width**	**46**

Pervious Areas

Section 1 (North Side)	**Width**	**Section 2 (South Side)**	**Width**
Swale	0	Swale	0
Median	0	Median	0
Total Width	**0**	**Total Width**	**0**

3.0 CONTRIBUTING FLOW FROM PROJECT AREA

A. Q = CIA Area (A) = L x W L = Distance between High Points 250

Section 1 (North Side- No Sidewalk)

Area = 6,000 Ft^2 0.14 ac

Flow = 0.52 CFS

Section 2 (South Side)

Area = 11,500 Ft^2 0.26 ac

Flow = 1.00 CFS

B. Q = CIA Area (A) = L x W L = Distance between High Points 330

Section 1 (North Side- No Sidewalk)

Area = 7,920 Ft^2 0.18 ac

Flow = 0.69 CFS

Section 2 (South Side)

Area = 15,180 Ft^2 0.35 ac

Flow = 1.32 CFS

C. Q = CIA Area (A) = L x W L = Distance between High Points 430

Section 1 (North Side- No Sidewalk)

Area = 10,320 Ft^2 0.24 ac

Flow = 0.90 CFS

Section 2 (South Side)

Area = 19,780 Ft^2 0.45 ac

Flow = 1.73 CFS

Summary of Contributing Flow from Project Area					
	Feet	CFS		Feet	CFS
Section 1	250.00	0.52	Section 2	250.00	1.00
	330.00	0.69		330.00	1.32
	430.00	0.90		430.00	1.73

4.0 INLET IN SUMP CONDITION

$Q = C_w \times P \times D^{1.5}$ Capacity of grate inlets operating as weirs Where

**Equation obtained from FHWA Drainage of Highway Pavements (HEC-12) Chapter 8*

D = (.02) * (L/2) = 0.11

L = Travel Lane 11

C_w = 3.0

P = Perimeter of Grate in Ft

P-2 Structure	23
P-4 Structure	15
P-6 Structure	19

P-2 Structures

$Q = C_w P D^{1.5}$ = 2.52 CFS

Assuming the inlet is 25% clogged

Q = 1.89 CFS

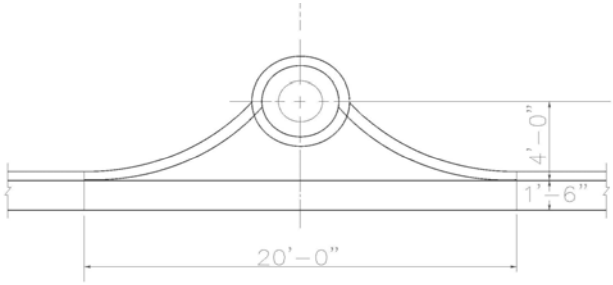

P-4 Structures

$Q = C_w P D^{1.5}$ = 1.64 CFS

Assuming the inlet is 25% clogged

Q = 1.23 CFS

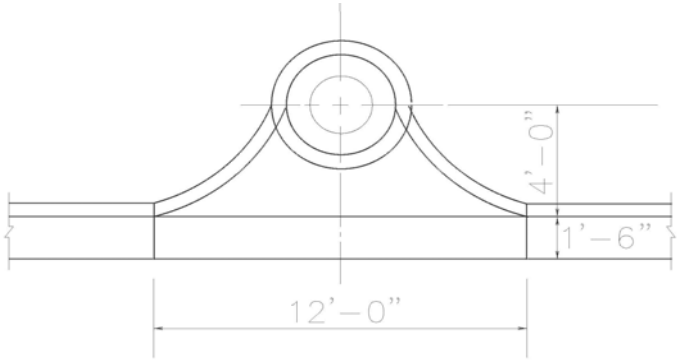

P-6 Structures

$Q = C_w P D^{1.5}$ = 2.08 CFS

Assuming the inlet is 25% clogged

Q = 1.56 CFS

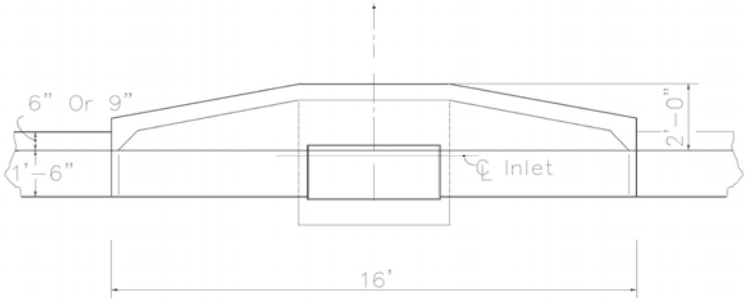

Summary of Inlet Capacity	
Inlet Type	**Inlet Capacity CFS**
P-2	1.89
P-4	1.23
P-6	1.56

5.0 SPREAD ANALYSIS - FLOW IN GUTTERS

Section 1 (North Side- No Sidewalk and 26 ft Width)

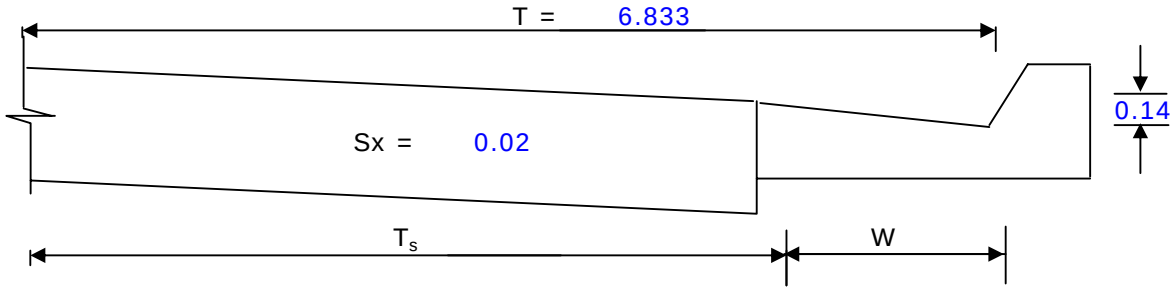

$Qs = (K/n) \times S_x^{5/3} \times S^{1/2} \times T_s^{8/3}$ Where

K =Coefficient	0.56		
W = Width of Gutter	1.333	(Feet)	
T_s = 1/2 Travel Lane	5.5	(Feet)	
T = Width of Flow (T_s + W)	6.833	(Feet)	
Sx = Cross Slope	0.02		
n = Manning Coefficient	0.016	(Asphalt)	
S = Longitudinal Slope	0.003		
D = T x S_x	0.14	(Feet)	

$Q = \frac{Qs}{1-Eo}$

$E_o = \frac{Q_w}{Q}$

$S_w = \frac{D}{W}$ = 0.10

$\frac{S_W}{S_X}$ = 5.13

$\frac{W}{T}$ = 0.20

Q_s = 0.26 CFS

From Chart 4

Eo = 0.6 Therefore;

Q = 0.66 CFS

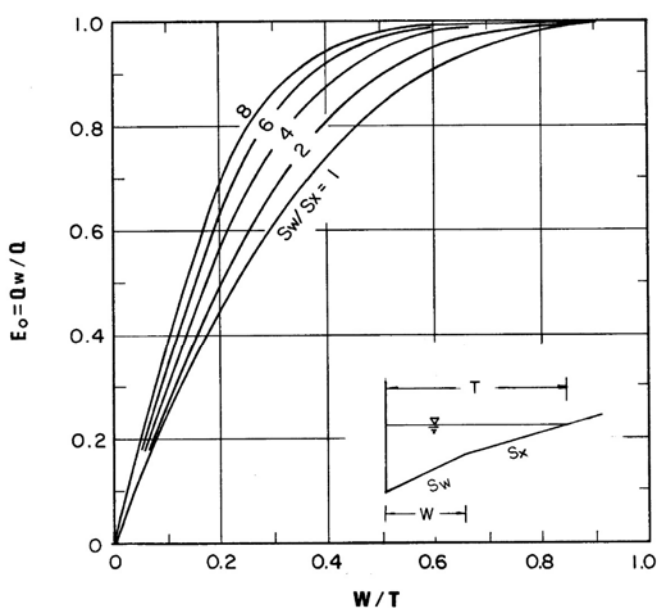

Ratio of frontal flow to total gutter flow.

Maximum Distance without Inlet -

Section 1 (North Side- No Sidewalk and 26 ft Width)

$Q = C \times I \times L \times W \longrightarrow L = \frac{Q^* 43560}{C \times I \times W}$ = 316 Ft

S. Roosevelt Drainage Calculations

Section 2 (South Side - Parking lane and 46 ft Width)

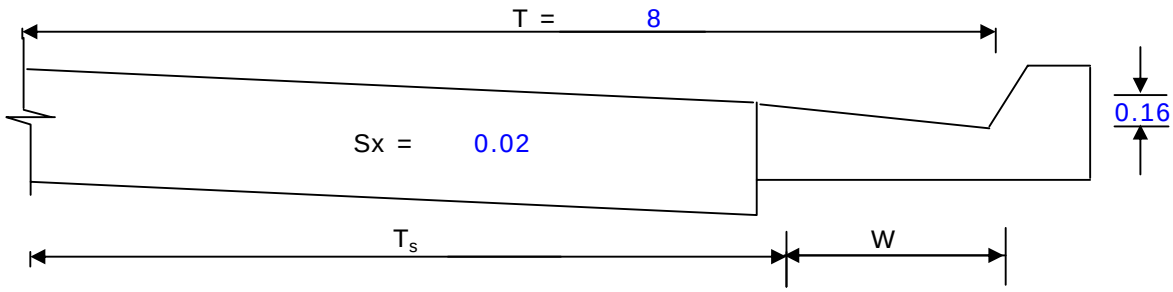

$Qs = (K/n) \times S_x^{5/3} \times S^{1/2} \times T_s^{8/3}$ Where

K =Coefficient	0.56		
W = Width of Gutter	1.333	(Feet)	
T_s = Parking Lane	6.66667	(Feet)	
T = Width of Flow (T_s + W)	8	(Feet)	
Sx = Cross Slope	0.02		
n = Manning Coefficient	0.016	(Asphalt)	
S = Longitudinal Slope	0.003		
D = T x S_x	0.16	(Feet)	

$Q = \frac{Qs}{1-Eo}$

$E_o = \frac{Q_w}{Q}$

$S_w = \frac{D}{W}$ = 0.12

$\frac{S_W}{S_X}$ = 6.00

$\frac{W}{T}$ = 0.17

Q_s = 0.44 CFS

From Chart 4

Eo = 0.55 Therefore;

Q = 0.97 CFS

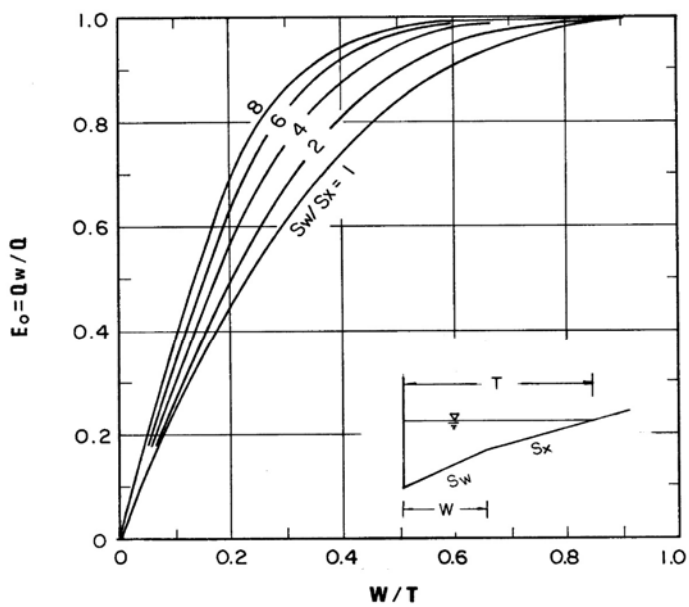

Ratio of frontal flow to total gutter flow.

Maximum Distance without Inlet -

Section 2 (South Side - Parking lane and 46 ft Width)

$Q = C \times I \times L \times W \longrightarrow L = \frac{Q*43560}{C \times I \times W}$ = 242 Ft

FDOT District 6 FPID. 250548-4-52-01
S Roosevelt BLVD / SR A1A from MP 0.00 to MP 0.78
Post-Development Conditions

Prepared by: J.R. Date: 12/4/2015
Checked by: A.R. Date: 12/4/2015

SPREAD CALCULATIONS

Structure Number	Inlet Type	Inlet Station	Station of upstream inlet or high point	Cross Slope (S_x)	Longitudinal Slope (S)	Contributing Area (Ac)	Runoff Coefficient (C_W)	Intensity (in/hr)	Flow Q (CxIxA) (cfs)	Bypass Flow from Previous Inlet (cfs)	Total Flow (cfs)	Spread "T" (ft)	Allowable Spread (ft)	Intercepted Flow (cfs)	Flow bypassed to downstream inlet (cfs)	Comments
LEFT GUTTER LINE																
S-2	P-6 Sag	10+82.00	12+30.00	2.00%	0.30%	0.111	0.95	4.0	0.42	0.00	0.42	2.13	7.00	0.42	0.00	
S-5	P-5 Grade	12+30.00	13+50.00	2.00%	0.30%	0.066	0.95	4.0	0.25	0.00	0.25	5.40	7.00	0.25	0.00	
S-6A	P-5 Grade	13+60.00	14+20.00	2.00%	0.30%	0.047	0.95	4.0	0.18	0.00	0.18	4.76	7.00	0.18	0.00	
S-8	P-1 Grade	16+20.00	14+20.00	2.00%	0.30%	0.120	0.95	4.0	0.46	0.00	0.46	6.76	7.00	0.46	0.00	
S-10	P-4 Sag	17+50.00	16+20.00	2.00%	0.30%	0.290	0.95	4.0	1.10	0.00	1.10	9.41	7.00	1.10	0.00	
S-12	P-5 Grade	19+60.00	23+50.00	2.00%	0.30%	0.150	0.95	4.0	0.57	0.00	0.57	7.35	7.00	0.57	0.00	
S-15	P-5 Grade	23+50.00	21+80.00	2.00%	0.30%	0.117	0.95	4.0	0.44	0.00	0.44	6.70	7.00	0.44	0.00	
S-17	P-6 Sag	25+36.00	28+30.00	2.00%	0.30%	0.179	0.95	4.0	0.68	0.01	0.69	2.95	7.00	0.69	0.00	
S-17A	P-5 Grade	26+10.00	30+00.00	2.00%	0.30%	0.120	0.95	4.0	0.46	0.00	0.46	6.76	7.00	0.45	0.00	
S-20	P-5 Grade	30+00.00	28+30.00	2.00%	0.30%	0.105	0.95	4.0	0.40	0.00	0.40	6.44	7.00	0.40	0.00	
S-22	P-6 Sag	31+30.00	30+00.00	2.00%	0.30%	0.219	0.95	4.0	0.83	0.00	0.83	3.35	7.00	0.83	0.00	
S-26	P-6 Sag	36+30.00	33+80.00	2.00%	0.30%	0.276	0.95	4.0	1.05	0.00	1.05	3.91	7.00	1.05	0.00	
S-30	P-6 Sag	41+30.00	38+80.00	2.00%	0.30%	0.276	0.95	4.0	1.05	0.00	1.05	3.90	7.00	1.05	0.00	
S-34	P-6 Sag	46+90.00	43+80.00	2.00%	0.30%	0.312	0.95	4.0	1.18	0.00	1.18	4.24	7.00	1.18	0.00	
S-38	P-6 Sag	51+97.00	49+43.54	2.00%	0.30%	0.162	0.95	4.0	0.61	0.00	0.61	2.73	7.00	0.61	0.00	

FDOT District 6 FPID. 250548-4-52-01
S Roosevelt BLVD / SR A1A from MP 0.00 to MP 0.78
Post-Development Conditions

Prepared by: J.R. Date: 12/4/2015
Checked by: A.R. Date: 12/4/2015

SPREAD CALCULATIONS

Structure Number	Inlet Type	Inlet Station	Station of upstream inlet or high point	Cross Slope (S_x)	Longitudinal Slope (S)	Contributing Area (Ac)	Runoff Coefficient (C_W)	Intensity (in/hr)	Flow Q (CxIxA) (cfs)	Bypass Flow from Previous Inlet (cfs)	Total Flow (cfs)	Spread "T" (ft)	Allowable Spread (ft)	Intercepted Flow (cfs)	Flow bypassed to downstream inlet (cfs)	Comments
RIGHT GUTTER LINE																
S-1	P-6 Sag	10+82.00	12+30.00	2.00%	0.30%	0.216	0.95	4.0	0.82	0.00	0.82	3.32	7.00	0.82	0.00	
S-3	P-5 Grade	11+60.00	11+60.00	2.00%	0.30%	0.105	0.95	4.0	0.42	0.00	0.42	6.44	6.83	0.42	0.00	
S-4	P-5 Grade	12+30.00	14+20.00	2.00%	0.30%	0.115	0.95	4.0	0.44	0.00	0.44	6.66	7.00	0.44	0.00	
S-6	P-5 Grade	13+50.00	12+30.00	2.00%	0.30%	0.077	0.95	4.0	0.29	0.00	0.29	5.74	7.00	0.29	0.00	
S-7	P-5 Grade	16+20.00	14+20.00	2.00%	0.30%	0.186	0.95	4.0	0.71	0.00	0.71	7.97	8.00	0.71	0.00	
S-9	P-6 Sag	17+50.00	16+20.00	2.00%	0.30%	0.279	0.95	4.0	1.06	0.00	1.06	3.94	8.00	1.06	0.00	
S-11	P-5 Grade	19+00.00	20+50.00	2.00%	0.30%	0.067	0.95	4.0	0.25	0.01	0.26	5.50	8.00	0.26	0.00	
S-12A	P-5 Grade	27+00.00	23+50.00	2.00%	0.30%	0.142	0.95	4.0	0.54	0.00	0.54	7.21	8.00	0.54	0.00	
S-13	P-5 Grade	20+50.00	21+80.00	2.00%	0.30%	0.146	0.95	4.0	0.55	0.00	0.55	7.27	8.00	0.55	0.01	
S-14	P-5 Grade	23+50.00	21+80.00	2.00%	0.30%	0.191	0.95	4.0	0.73	0.00	0.73	8.05	8.00	0.71	0.02	
S-16	P-6 Sag	25+36.00	23+50.00	2.00%	0.30%	0.398	0.95	4.0	1.51	0.03	1.54	5.04	8.00	1.54	0.00	
S-18	P-5 Grade	27+00.00	28+30.00	2.00%	0.30%	0.142	0.95	4.0	0.54	0.00	0.54	7.21	8.00	0.53	0.01	
S-19	P-5 Grade	30+00.00	28+30.00	2.00%	0.30%	0.200	0.95	4.0	0.76	0.00	0.76	8.20	8.00	0.74	0.02	
S-21	P-6 Sag	31+30.00	30+00.00	2.00%	0.30%	0.310	0.95	4.0	1.18	0.03	1.20	4.29	8.00	1.20	0.00	
S-23	P-5 Grade	32+50.00	33+80.00	2.00%	0.30%	0.127	0.95	4.0	0.48	0.00	0.48	6.90	8.00	0.48	0.00	
S-24	P-5 Grade	35+00.00	33+80.00	2.00%	0.30%	0.138	0.95	4.0	0.53	0.00	0.53	7.13	8.00	0.53	0.00	
S-25	P-6 Sag	36+30.00	35+00.00	2.00%	0.30%	0.289	0.95	4.0	1.10	0.01	1.11	4.05	8.00	1.11	0.00	
S-27	P-5 Grade	37+50.00	38+80.00	2.00%	0.30%	0.152	0.95	4.0	0.58	0.00	0.58	7.38	8.00	0.57	0.01	
S-28	P-5 Grade	40+00.00	38+80.00	2.00%	0.30%	0.140	0.95	4.0	0.53	0.00	0.53	7.16	8.00	0.52	0.01	
S-29	P-6 Sag	41+30.00	40+00.00	2.00%	0.30%	0.291	0.95	4.0	1.11	0.02	1.12	4.09	8.00	1.12	0.00	
S-31	P-5 Grade	42+50.00	43+80.00	2.00%	0.30%	0.152	0.95	4.0	0.58	0.00	0.58	7.39	8.00	0.57	0.01	
S-32	P-5 Grade	45+50.00	43+80.00	2.00%	0.30%	0.198	0.95	4.0	0.75	0.00	0.75	8.16	8.00	0.75	0.00	
S-33	P-6 Sag	46+90.00	45+50.00	2.00%	0.30%	0.290	0.95	4.0	1.10	0.00	1.10	4.04	8.00	1.10	0.00	
S-35	P-5 Grade	48+00.00	49+40.00	2.00%	0.30%	0.162	0.95	4.0	0.61	0.00	0.61	7.56	8.00	0.61	0.00	
S-36	P-5 Grade	50+50.00	49+40.00	2.00%	0.30%	0.118	0.95	4.0	0.45	0.00	0.45	6.73	8.00	0.45	0.00	
S-37	P-6 Sag	51+97.00	50+50.00	2.00%	0.30%	0.205	0.95	4.0	0.78	0.00	0.78	3.21	8.00	0.78	0.00	
S-38	P-6 Sag	51+97.00	51+97.00	2.00%	0.30%	0.162	0.95	4.0	0.61	0.00	0.61	2.73	7.00	0.61	0.00	

APPENDIX 5

STORM SEWER CALCULATIONS

NODE NETWORK DIAGRAM

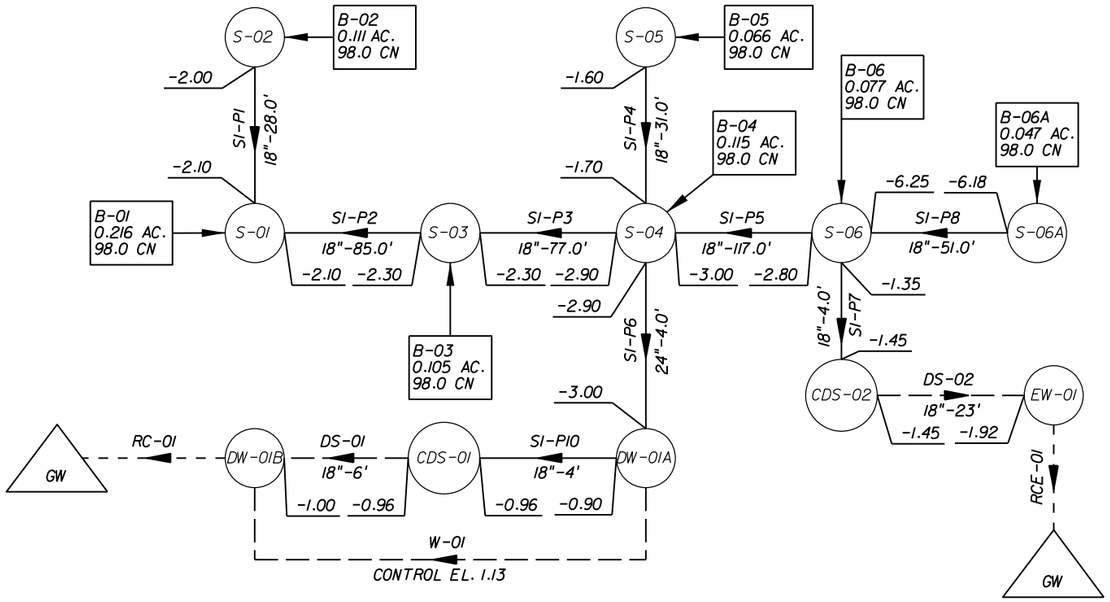

SYSTEM NO. 1

STA. 10+82.01 TO STA. 14+20.00

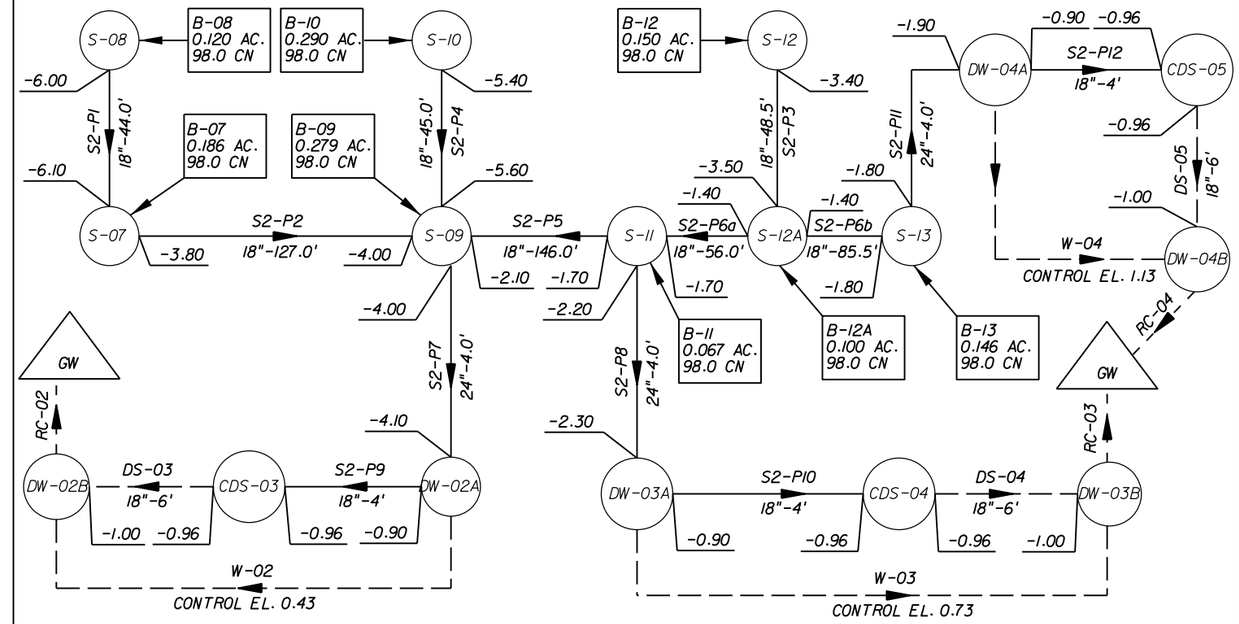

SYSTEM NO. 2

STA. 14+20.00 TO STA. 21+80.00

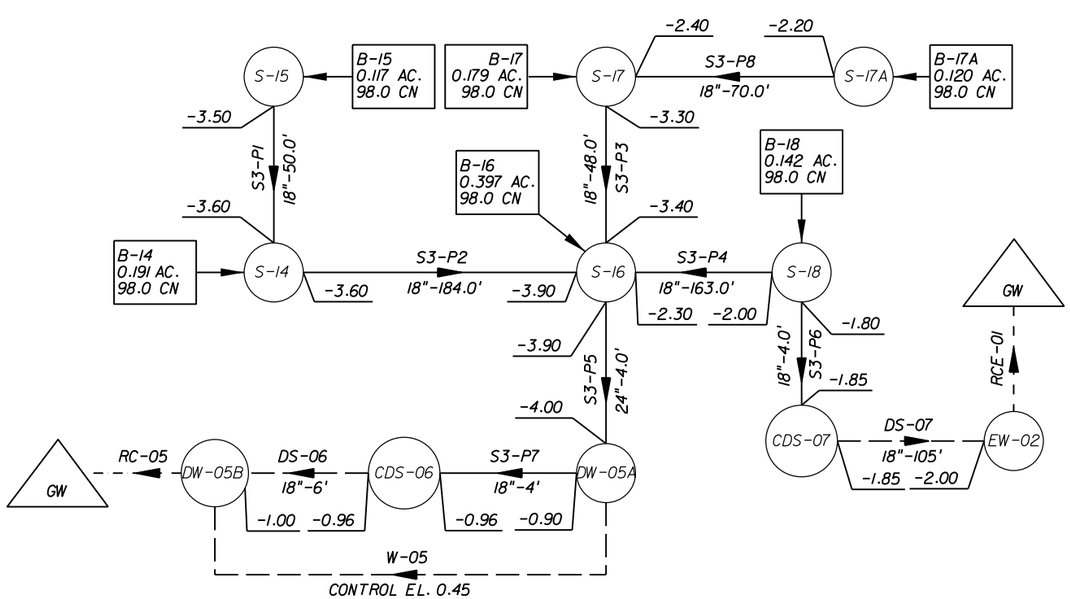

SYSTEM NO. 3

STA. 21+80.00 TO STA. 28+25.00

LEGEND

BX X.XX Ac. X.XX CN	CONTRIBUTING BASIN BASIN NAME BASIN AREA CURVE NUMBER	EX+B__EXF	RATING CURVE LINK
SX	NODE NAME	GR	BOUNDARY NODE WITH VARIABLE TAILWATER
SX-SX (X) XX"-XX.X' X.X X.X	PIPE LINK WITH (QUANTITY) SIZE-LENGTH AND INVERT ELEVATIONS		

REVISIONS			
DATE	DESCRIPTION	DATE	DESCRIPTION

BCC Engineering, Inc.
Luis A. Rodriguez
P.E. License No. 63983
7300 N Kendall Drive, Suite 400. Miami, Florida 33156
Phone: (305) 670-2350 Fax: (305) 670-2351
Certificate of Authorization No. 7184

STATE OF FLORIDA
DEPARTMENT OF TRANSPORTATION

ROAD NO.	COUNTY	FINANCIAL PROJECT ID
SR A1A	MONROE	250548-4-52-01

NODE-LINK SCHEMATIC POST-DEVELOPMENT

SHEET NO. 1-2

$USERS $DATES $TIMES $FILES

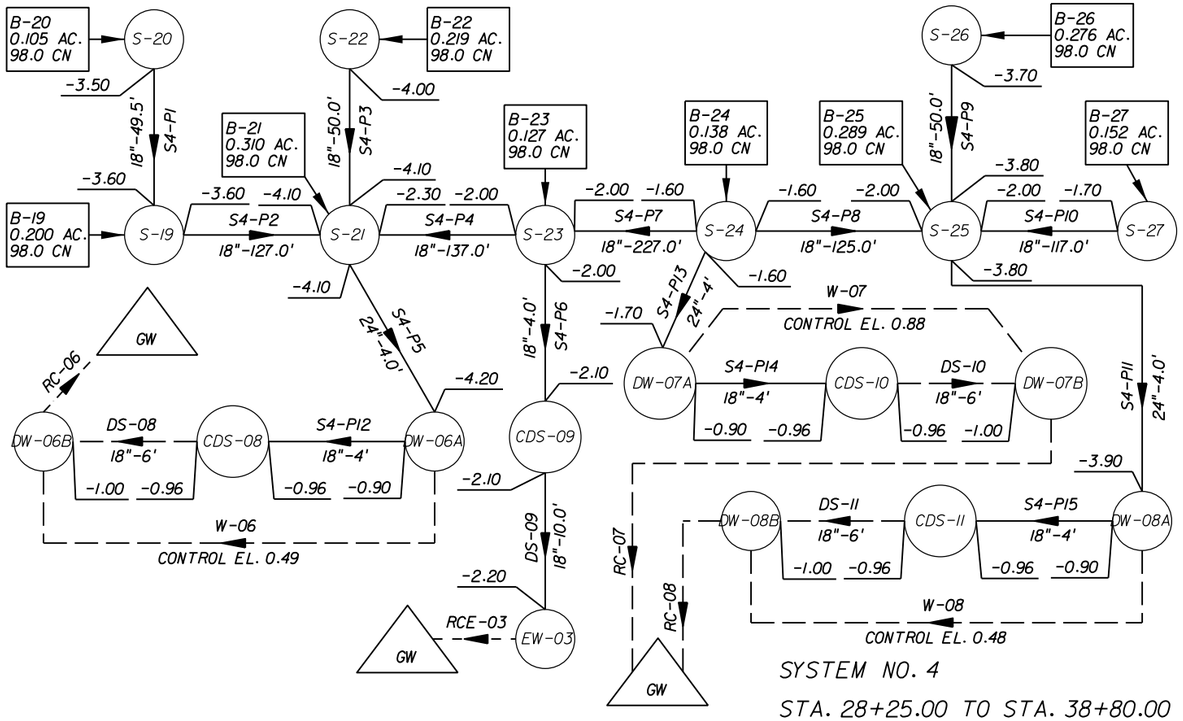

SYSTEM NO. 4

STA. 28+25.00 TO STA. 38+80.00

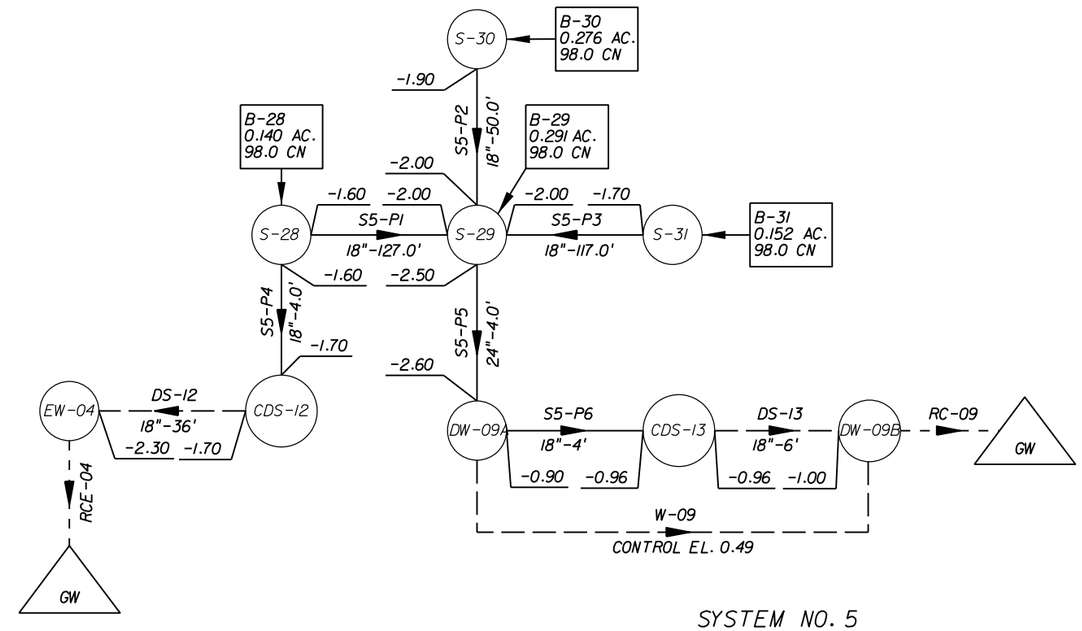

SYSTEM NO. 5

STA. 38+80.00 TO STA. 43+80.00

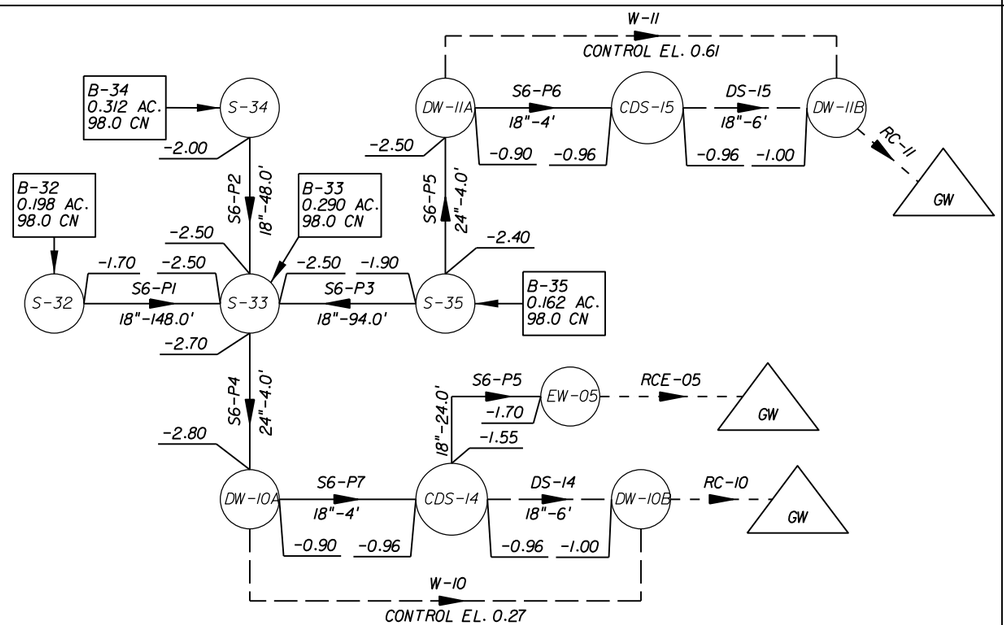

SYSTEM NO. 6

STA. 43+80.00 TO STA. 49+43.51

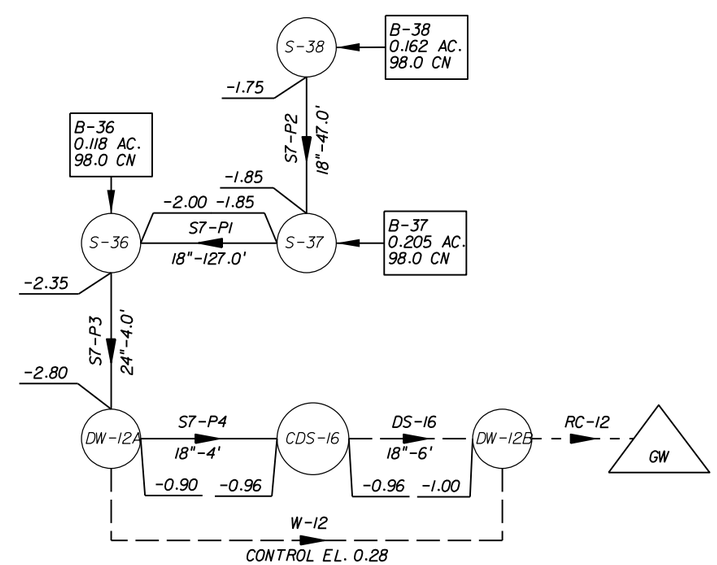

SYSTEM NO. 7

STA. 49+43.51 TO STA. 52+00.00

REVISIONS			
DATE	DESCRIPTION	DATE	DESCRIPTION

BCC Engineering, Inc.
Luis A. Rodriguez
P.E. License No. 63983
7300 N Kendall Drive, Suite 400. Miami, Florida 33156
Phone: (305) 670-2350 Fax: (305) 670-2351
Certificate of Authorization No. 7184

STATE OF FLORIDA
DEPARTMENT OF TRANSPORTATION

ROAD NO.	COUNTY	FINANCIAL PROJECT ID
SR A1A	MONROE	250548-4-52-01

NODE-LINK SCHEMATIC POST-DEVELOPMENT

SHEET NO. 2-2

$USERS $DATES $TIMES $FILES

ICPR
(INPUT)

```
==========================================================================================
==== Basins ==============================================================================
==========================================================================================

         Name: B-01                    Node: S-01                  Status: Onsite
        Group: system-1                Type: SCS Unit Hydrograph CN

        Unit Hydrograph: Uh256                   Peaking Factor: 256.0
          Rainfall File:                     Storm Duration(hrs): 0.00
    Rainfall Amount(in): 0.000                 Time of Conc(min): 10.00
            Area(ac): 0.216                      Time Shift(hrs): 0.00
         Curve Number: 98.00             Max Allowable Q(cfs): 999999.000
              DCIA(%): 0.00


-------------------------------------------------------------------------------------------
         Name: B-02                    Node: S-02                  Status: Onsite
        Group: system-1                Type: SCS Unit Hydrograph CN

        Unit Hydrograph: Uh256                   Peaking Factor: 256.0
          Rainfall File:                     Storm Duration(hrs): 0.00
    Rainfall Amount(in): 0.000                 Time of Conc(min): 10.00
            Area(ac): 0.111                      Time Shift(hrs): 0.00
         Curve Number: 98.00             Max Allowable Q(cfs): 999999.000
              DCIA(%): 0.00


-------------------------------------------------------------------------------------------
         Name: B-03                    Node: S-03                  Status: Onsite
        Group: system-1                Type: SCS Unit Hydrograph CN

        Unit Hydrograph: Uh256                   Peaking Factor: 256.0
          Rainfall File:                     Storm Duration(hrs): 0.00
    Rainfall Amount(in): 0.000                 Time of Conc(min): 10.00
            Area(ac): 0.105                      Time Shift(hrs): 0.00
         Curve Number: 98.00             Max Allowable Q(cfs): 999999.000
              DCIA(%): 0.00


-------------------------------------------------------------------------------------------
         Name: B-04                    Node: S-04                  Status: Onsite
        Group: system-1                Type: SCS Unit Hydrograph CN

        Unit Hydrograph: Uh256                   Peaking Factor: 256.0
          Rainfall File:                     Storm Duration(hrs): 0.00
    Rainfall Amount(in): 0.000                 Time of Conc(min): 10.00
            Area(ac): 0.115                      Time Shift(hrs): 0.00
         Curve Number: 98.00             Max Allowable Q(cfs): 999999.000
              DCIA(%): 0.00


-------------------------------------------------------------------------------------------
         Name: B-05                    Node: S-05                  Status: Onsite
        Group: system-1                Type: SCS Unit Hydrograph CN

        Unit Hydrograph: Uh256                   Peaking Factor: 256.0
          Rainfall File:                     Storm Duration(hrs): 0.00
    Rainfall Amount(in): 0.000                 Time of Conc(min): 10.00
            Area(ac): 0.066                      Time Shift(hrs): 0.00
         Curve Number: 98.00             Max Allowable Q(cfs): 999999.000
              DCIA(%): 0.00


-------------------------------------------------------------------------------------------
```

```
        Name: B-06                    Node: S-06                  Status: Onsite
       Group: system-1                Type: SCS Unit Hydrograph CN

       Unit Hydrograph: Uh256                  Peaking Factor: 256.0
         Rainfall File:                   Storm Duration(hrs): 0.00
   Rainfall Amount(in): 0.000               Time of Conc(min): 10.00
            Area(ac): 0.077                  Time Shift(hrs): 0.00
        Curve Number: 98.00             Max Allowable Q(cfs): 999999.000
             DCIA(%): 0.00


-----------------------------------------------------------------------------------------------
        Name: B-06A                   Node: S-06A                 Status: Onsite
       Group: system-1                Type: SCS Unit Hydrograph CN

       Unit Hydrograph: Uh256                  Peaking Factor: 256.0
         Rainfall File:                   Storm Duration(hrs): 0.00
   Rainfall Amount(in): 0.000               Time of Conc(min): 10.00
            Area(ac): 0.047                  Time Shift(hrs): 0.00
        Curve Number: 98.00             Max Allowable Q(cfs): 999999.000
             DCIA(%): 0.00


-----------------------------------------------------------------------------------------------
        Name: B-07                    Node: S-07                  Status: Onsite
       Group: system-2                Type: SCS Unit Hydrograph CN

       Unit Hydrograph: Uh256                  Peaking Factor: 256.0
         Rainfall File:                   Storm Duration(hrs): 0.00
   Rainfall Amount(in): 0.000               Time of Conc(min): 10.00
            Area(ac): 0.186                  Time Shift(hrs): 0.00
        Curve Number: 98.00             Max Allowable Q(cfs): 999999.000
             DCIA(%): 0.00


-----------------------------------------------------------------------------------------------
        Name: B-08                    Node: S-08                  Status: Onsite
       Group: system-2                Type: SCS Unit Hydrograph CN

       Unit Hydrograph: Uh256                  Peaking Factor: 256.0
         Rainfall File:                   Storm Duration(hrs): 0.00
   Rainfall Amount(in): 0.000               Time of Conc(min): 10.00
            Area(ac): 0.120                  Time Shift(hrs): 0.00
        Curve Number: 98.00             Max Allowable Q(cfs): 999999.000
             DCIA(%): 0.00


-----------------------------------------------------------------------------------------------
        Name: B-09                    Node: S-09                  Status: Onsite
       Group: system-2                Type: SCS Unit Hydrograph CN

       Unit Hydrograph: Uh256                  Peaking Factor: 256.0
         Rainfall File:                   Storm Duration(hrs): 0.00
   Rainfall Amount(in): 0.000               Time of Conc(min): 10.00
            Area(ac): 0.279                  Time Shift(hrs): 0.00
        Curve Number: 98.00             Max Allowable Q(cfs): 999999.000
             DCIA(%): 0.00


-----------------------------------------------------------------------------------------------
        Name: B-10                    Node: S-10                  Status: Onsite
       Group: system-2                Type: SCS Unit Hydrograph CN

       Unit Hydrograph: Uh256                  Peaking Factor: 256.0
         Rainfall File:                   Storm Duration(hrs): 0.00
```

```
    Rainfall Amount(in): 0.000                 Time of Conc(min): 10.00
               Area(ac): 0.290                   Time Shift(hrs): 0.00
           Curve Number: 98.00              Max Allowable Q(cfs): 999999.000
                DCIA(%): 0.00


-------------------------------------------------------------------------------------------------
         Name: B-11                     Node: S-11                    Status: Onsite
        Group: system-2                 Type: SCS Unit Hydrograph CN

        Unit Hydrograph: Uh256                   Peaking Factor: 256.0
          Rainfall File:                     Storm Duration(hrs): 0.00
    Rainfall Amount(in): 0.000                 Time of Conc(min): 10.00
               Area(ac): 0.067                   Time Shift(hrs): 0.00
           Curve Number: 98.00              Max Allowable Q(cfs): 999999.000
                DCIA(%): 0.00


-------------------------------------------------------------------------------------------------
         Name: B-12                     Node: S-12                    Status: Onsite
        Group: system-2                 Type: SCS Unit Hydrograph CN

        Unit Hydrograph: Uh256                   Peaking Factor: 256.0
          Rainfall File:                     Storm Duration(hrs): 0.00
    Rainfall Amount(in): 0.000                 Time of Conc(min): 10.00
               Area(ac): 0.150                   Time Shift(hrs): 0.00
           Curve Number: 98.00              Max Allowable Q(cfs): 999999.000
                DCIA(%): 0.00


-------------------------------------------------------------------------------------------------
         Name: B-12A                    Node: S-12A                   Status: Onsite
        Group: system-2                 Type: SCS Unit Hydrograph CN

        Unit Hydrograph: Uh256                   Peaking Factor: 256.0
          Rainfall File:                     Storm Duration(hrs): 0.00
    Rainfall Amount(in): 0.000                 Time of Conc(min): 10.00
               Area(ac): 0.100                   Time Shift(hrs): 0.00
           Curve Number: 98.00              Max Allowable Q(cfs): 999999.000
                DCIA(%): 0.00


-------------------------------------------------------------------------------------------------
         Name: B-13                     Node: S-13                    Status: Onsite
        Group: system-2                 Type: SCS Unit Hydrograph CN

        Unit Hydrograph: Uh256                   Peaking Factor: 256.0
          Rainfall File:                     Storm Duration(hrs): 0.00
    Rainfall Amount(in): 0.000                 Time of Conc(min): 10.00
               Area(ac): 0.146                   Time Shift(hrs): 0.00
           Curve Number: 98.00              Max Allowable Q(cfs): 999999.000
                DCIA(%): 0.00


-------------------------------------------------------------------------------------------------
         Name: B-14                     Node: S-14                    Status: Onsite
        Group: system-3                 Type: SCS Unit Hydrograph CN

        Unit Hydrograph: Uh256                   Peaking Factor: 256.0
          Rainfall File:                     Storm Duration(hrs): 0.00
    Rainfall Amount(in): 0.000                 Time of Conc(min): 10.00
               Area(ac): 0.191                   Time Shift(hrs): 0.00
           Curve Number: 98.00              Max Allowable Q(cfs): 999999.000
                DCIA(%): 0.00
```

```
-----------------------------------------------------------------------------------------------
        Name: B-15                    Node: S-15                  Status: Onsite
       Group: system-3                Type: SCS Unit Hydrograph CN

       Unit Hydrograph: Uh256                  Peaking Factor: 256.0
         Rainfall File:                   Storm Duration(hrs): 0.00
   Rainfall Amount(in): 0.000               Time of Conc(min): 10.00
              Area(ac): 0.117                 Time Shift(hrs): 0.00
          Curve Number: 98.00            Max Allowable Q(cfs): 999999.000
               DCIA(%): 0.00


-----------------------------------------------------------------------------------------------
        Name: B-16                    Node: S-16                  Status: Onsite
       Group: system-3                Type: SCS Unit Hydrograph CN

       Unit Hydrograph: Uh256                  Peaking Factor: 256.0
         Rainfall File:                   Storm Duration(hrs): 0.00
   Rainfall Amount(in): 0.000               Time of Conc(min): 10.00
              Area(ac): 0.397                 Time Shift(hrs): 0.00
          Curve Number: 98.00            Max Allowable Q(cfs): 999999.000
               DCIA(%): 0.00


-----------------------------------------------------------------------------------------------
        Name: B-17                    Node: S-17                  Status: Onsite
       Group: system-3                Type: SCS Unit Hydrograph CN

       Unit Hydrograph: Uh256                  Peaking Factor: 256.0
         Rainfall File:                   Storm Duration(hrs): 0.00
   Rainfall Amount(in): 0.000               Time of Conc(min): 10.00
              Area(ac): 0.179                 Time Shift(hrs): 0.00
          Curve Number: 98.00            Max Allowable Q(cfs): 999999.000
               DCIA(%): 0.00


-----------------------------------------------------------------------------------------------
        Name: B-17A                   Node: S-17A                 Status: Onsite
       Group: system-3                Type: SCS Unit Hydrograph CN

       Unit Hydrograph: Uh256                  Peaking Factor: 256.0
         Rainfall File:                   Storm Duration(hrs): 0.00
   Rainfall Amount(in): 0.000               Time of Conc(min): 10.00
              Area(ac): 0.120                 Time Shift(hrs): 0.00
          Curve Number: 98.00            Max Allowable Q(cfs): 999999.000
               DCIA(%): 0.00


-----------------------------------------------------------------------------------------------
        Name: B-18                    Node: S-18                  Status: Onsite
       Group: system-3                Type: SCS Unit Hydrograph CN

       Unit Hydrograph: Uh256                  Peaking Factor: 256.0
         Rainfall File:                   Storm Duration(hrs): 0.00
   Rainfall Amount(in): 0.000               Time of Conc(min): 10.00
              Area(ac): 0.142                 Time Shift(hrs): 0.00
          Curve Number: 98.00            Max Allowable Q(cfs): 999999.000
               DCIA(%): 0.00


-----------------------------------------------------------------------------------------------
        Name: B-19                    Node: S-19                  Status: Onsite
       Group: system-4                Type: SCS Unit Hydrograph CN
```

```
       Unit Hydrograph: Uh256                    Peaking Factor: 256.0
         Rainfall File:                     Storm Duration(hrs): 0.00
   Rainfall Amount(in): 0.000                 Time of Conc(min): 10.00
              Area(ac): 0.200                   Time Shift(hrs): 0.00
          Curve Number: 98.00             Max Allowable Q(cfs): 999999.000
               DCIA(%): 0.00


-------------------------------------------------------------------------------------------
        Name: B-20                     Node: S-20                   Status: Onsite
       Group: system-4                 Type: SCS Unit Hydrograph CN

       Unit Hydrograph: Uh256                    Peaking Factor: 256.0
         Rainfall File:                     Storm Duration(hrs): 0.00
   Rainfall Amount(in): 0.000                 Time of Conc(min): 10.00
              Area(ac): 0.105                   Time Shift(hrs): 0.00
          Curve Number: 98.00             Max Allowable Q(cfs): 999999.000
               DCIA(%): 0.00


-------------------------------------------------------------------------------------------
        Name: B-21                     Node: S-21                   Status: Onsite
       Group: system-4                 Type: SCS Unit Hydrograph CN

       Unit Hydrograph: Uh256                    Peaking Factor: 256.0
         Rainfall File:                     Storm Duration(hrs): 0.00
   Rainfall Amount(in): 0.000                 Time of Conc(min): 10.00
              Area(ac): 0.310                   Time Shift(hrs): 0.00
          Curve Number: 98.00             Max Allowable Q(cfs): 999999.000
               DCIA(%): 0.00


-------------------------------------------------------------------------------------------
        Name: B-22                     Node: S-22                   Status: Onsite
       Group: system-4                 Type: SCS Unit Hydrograph CN

       Unit Hydrograph: Uh256                    Peaking Factor: 256.0
         Rainfall File:                     Storm Duration(hrs): 0.00
   Rainfall Amount(in): 0.000                 Time of Conc(min): 10.00
              Area(ac): 0.219                   Time Shift(hrs): 0.00
          Curve Number: 98.00             Max Allowable Q(cfs): 999999.000
               DCIA(%): 0.00


-------------------------------------------------------------------------------------------
        Name: B-23                     Node: S-23                   Status: Onsite
       Group: system-4                 Type: SCS Unit Hydrograph CN

       Unit Hydrograph: Uh256                    Peaking Factor: 256.0
         Rainfall File:                     Storm Duration(hrs): 0.00
   Rainfall Amount(in): 0.000                 Time of Conc(min): 10.00
              Area(ac): 0.127                   Time Shift(hrs): 0.00
          Curve Number: 98.00             Max Allowable Q(cfs): 999999.000
               DCIA(%): 0.00


-------------------------------------------------------------------------------------------
        Name: B-24                     Node: S-24                   Status: Onsite
       Group: system-4                 Type: SCS Unit Hydrograph CN

       Unit Hydrograph: Uh256                    Peaking Factor: 256.0
         Rainfall File:                     Storm Duration(hrs): 0.00
   Rainfall Amount(in): 0.000                 Time of Conc(min): 10.00
              Area(ac): 0.138                   Time Shift(hrs): 0.00
```

```
          Curve Number: 98.00             Max Allowable Q(cfs): 999999.000
               DCIA(%): 0.00


-----------------------------------------------------------------------------------------------
         Name: B-25                    Node: S-25                   Status: Onsite
        Group: system-4                Type: SCS Unit Hydrograph CN

        Unit Hydrograph: Uh256                   Peaking Factor: 256.0
          Rainfall File:                     Storm Duration(hrs): 0.00
    Rainfall Amount(in): 0.000                 Time of Conc(min): 10.00
            Area(ac): 0.289                      Time Shift(hrs): 0.00
          Curve Number: 98.00             Max Allowable Q(cfs): 999999.000
               DCIA(%): 0.00


-----------------------------------------------------------------------------------------------
         Name: B-26                    Node: S-26                   Status: Onsite
        Group: system-4                Type: SCS Unit Hydrograph CN

        Unit Hydrograph: Uh256                   Peaking Factor: 256.0
          Rainfall File:                     Storm Duration(hrs): 0.00
    Rainfall Amount(in): 0.000                 Time of Conc(min): 10.00
            Area(ac): 0.276                      Time Shift(hrs): 0.00
          Curve Number: 98.00             Max Allowable Q(cfs): 999999.000
               DCIA(%): 0.00


-----------------------------------------------------------------------------------------------
         Name: B-27                    Node: S-27                   Status: Onsite
        Group: system-4                Type: SCS Unit Hydrograph CN

        Unit Hydrograph: Uh256                   Peaking Factor: 256.0
          Rainfall File:                     Storm Duration(hrs): 0.00
    Rainfall Amount(in): 0.000                 Time of Conc(min): 10.00
            Area(ac): 0.152                      Time Shift(hrs): 0.00
          Curve Number: 98.00             Max Allowable Q(cfs): 999999.000
               DCIA(%): 0.00


-----------------------------------------------------------------------------------------------
         Name: B-28                    Node: S-28                   Status: Onsite
        Group: system-5                Type: SCS Unit Hydrograph CN

        Unit Hydrograph: Uh256                   Peaking Factor: 256.0
          Rainfall File:                     Storm Duration(hrs): 0.00
    Rainfall Amount(in): 0.000                 Time of Conc(min): 10.00
            Area(ac): 0.140                      Time Shift(hrs): 0.00
          Curve Number: 98.00             Max Allowable Q(cfs): 999999.000
               DCIA(%): 0.00


-----------------------------------------------------------------------------------------------
         Name: B-29                    Node: S-29                   Status: Onsite
        Group: system-5                Type: SCS Unit Hydrograph CN

        Unit Hydrograph: Uh256                   Peaking Factor: 256.0
          Rainfall File:                     Storm Duration(hrs): 0.00
    Rainfall Amount(in): 0.000                 Time of Conc(min): 10.00
            Area(ac): 0.291                      Time Shift(hrs): 0.00
          Curve Number: 98.00             Max Allowable Q(cfs): 999999.000
               DCIA(%): 0.00
```

```
-----------------------------------------------------------------------------------------------
         Name: B-30                    Node: S-30                  Status: Onsite
        Group: system-5                Type: SCS Unit Hydrograph CN

        Unit Hydrograph: Uh256                  Peaking Factor: 256.0
          Rainfall File:                     Storm Duration(hrs): 0.00
    Rainfall Amount(in): 0.000                 Time of Conc(min): 10.00
               Area(ac): 0.276                   Time Shift(hrs): 0.00
           Curve Number: 98.00             Max Allowable Q(cfs): 999999.000
                DCIA(%): 0.00


-----------------------------------------------------------------------------------------------
         Name: B-31                    Node: S-31                  Status: Onsite
        Group: system-5                Type: SCS Unit Hydrograph CN

        Unit Hydrograph: Uh256                  Peaking Factor: 256.0
          Rainfall File:                     Storm Duration(hrs): 0.00
    Rainfall Amount(in): 0.000                 Time of Conc(min): 10.00
               Area(ac): 0.152                   Time Shift(hrs): 0.00
           Curve Number: 98.00             Max Allowable Q(cfs): 999999.000
                DCIA(%): 0.00


-----------------------------------------------------------------------------------------------
         Name: B-32                    Node: S-32                  Status: Onsite
        Group: system-6                Type: SCS Unit Hydrograph CN

        Unit Hydrograph: Uh256                  Peaking Factor: 256.0
          Rainfall File:                     Storm Duration(hrs): 0.00
    Rainfall Amount(in): 0.000                 Time of Conc(min): 10.00
               Area(ac): 0.198                   Time Shift(hrs): 0.00
           Curve Number: 98.00             Max Allowable Q(cfs): 999999.000
                DCIA(%): 0.00


-----------------------------------------------------------------------------------------------
         Name: B-33                    Node: S-33                  Status: Onsite
        Group: system-6                Type: SCS Unit Hydrograph CN

        Unit Hydrograph: Uh256                  Peaking Factor: 256.0
          Rainfall File:                     Storm Duration(hrs): 0.00
    Rainfall Amount(in): 0.000                 Time of Conc(min): 10.00
               Area(ac): 0.290                   Time Shift(hrs): 0.00
           Curve Number: 98.00             Max Allowable Q(cfs): 999999.000
                DCIA(%): 0.00


-----------------------------------------------------------------------------------------------
         Name: B-34                    Node: S-34                  Status: Onsite
        Group: system-6                Type: SCS Unit Hydrograph CN

        Unit Hydrograph: Uh256                  Peaking Factor: 256.0
          Rainfall File:                     Storm Duration(hrs): 0.00
    Rainfall Amount(in): 0.000                 Time of Conc(min): 10.00
               Area(ac): 0.312                   Time Shift(hrs): 0.00
           Curve Number: 98.00             Max Allowable Q(cfs): 999999.000
                DCIA(%): 0.00


-----------------------------------------------------------------------------------------------
         Name: B-35                    Node: S-35                  Status: Onsite
        Group: system-6                Type: SCS Unit Hydrograph CN

        Unit Hydrograph: Uh256                  Peaking Factor: 256.0
```

```
          Rainfall File:                      Storm Duration(hrs): 0.00
    Rainfall Amount(in): 0.000                  Time of Conc(min): 10.00
               Area(ac): 0.162                    Time Shift(hrs): 0.00
           Curve Number: 98.00               Max Allowable Q(cfs): 999999.000
                DCIA(%): 0.00



-------------------------------------------------------------------------------------------------
         Name: B-36                      Node: S-36                    Status: Onsite
        Group: system-7                  Type: SCS Unit Hydrograph CN

        Unit Hydrograph: Uh256                     Peaking Factor: 256.0
          Rainfall File:                      Storm Duration(hrs): 0.00
    Rainfall Amount(in): 0.000                  Time of Conc(min): 10.00
               Area(ac): 0.118                    Time Shift(hrs): 0.00
           Curve Number: 98.00               Max Allowable Q(cfs): 999999.000
                DCIA(%): 0.00



-------------------------------------------------------------------------------------------------
         Name: B-37                      Node: S-37                    Status: Onsite
        Group: system-7                  Type: SCS Unit Hydrograph CN

        Unit Hydrograph: Uh256                     Peaking Factor: 256.0
          Rainfall File:                      Storm Duration(hrs): 0.00
    Rainfall Amount(in): 0.000                  Time of Conc(min): 10.00
               Area(ac): 0.205                    Time Shift(hrs): 0.00
           Curve Number: 98.00               Max Allowable Q(cfs): 999999.000
                DCIA(%): 0.00



-------------------------------------------------------------------------------------------------
         Name: B-38                      Node: S-38                    Status: Onsite
        Group: system-7                  Type: SCS Unit Hydrograph CN

        Unit Hydrograph: Uh256                     Peaking Factor: 256.0
          Rainfall File:                      Storm Duration(hrs): 0.00
    Rainfall Amount(in): 0.000                  Time of Conc(min): 10.00
               Area(ac): 0.162                    Time Shift(hrs): 0.00
           Curve Number: 98.00               Max Allowable Q(cfs): 999999.000
                DCIA(%): 0.00



=================================================================================================
==== Nodes ======================================================================================
=================================================================================================

      Name: CDS-01              Base Flow(cfs): 0.000          Init Stage(ft): -0.540
     Group: system-1             Plunge Factor: 1.30           Warn Stage(ft): 3.300
      Type: Manhole, Flat Floor


      Stage(ft)        Area(ac)
--------------- ---------------
         -6.210          0.0001
          3.300          0.0001

-------------------------------------------------------------------------------------------------
      Name: CDS-02              Base Flow(cfs): 0.000          Init Stage(ft): -0.540
     Group: system-1             Plunge Factor: 1.30           Warn Stage(ft): 3.580
      Type: Manhole, Flat Floor


      Stage(ft)        Area(ac)
```

```
--------------- ---------------
         -7.030          0.0003
          3.580          0.0003

-------------------------------------------------------------------------------------------
      Name: CDS-03             Base Flow(cfs): 0.000          Init Stage(ft): -0.540
     Group: system-2            Plunge Factor: 1.30           Warn Stage(ft): 2.600
      Type: Manhole, Flat Floor



      Stage(ft)        Area(ac)
--------------- ---------------
         -6.210          0.0003
          2.600          0.0003

-------------------------------------------------------------------------------------------
      Name: CDS-04             Base Flow(cfs): 0.000          Init Stage(ft): -0.540
     Group: system-2            Plunge Factor: 1.30           Warn Stage(ft): 2.990
      Type: Manhole, Flat Floor



      Stage(ft)        Area(ac)
--------------- ---------------
         -6.210          0.0001
          2.990          0.0001

-------------------------------------------------------------------------------------------
      Name: CDS-05             Base Flow(cfs): 0.000          Init Stage(ft): -0.540
     Group: system-2            Plunge Factor: 1.30           Warn Stage(ft): 3.450
      Type: Manhole, Flat Floor



      Stage(ft)        Area(ac)
--------------- ---------------
         -6.210          0.0003
          3.450          0.0003

-------------------------------------------------------------------------------------------
      Name: CDS-06             Base Flow(cfs): 0.000          Init Stage(ft): -0.540
     Group: system-3            Plunge Factor: 1.30           Warn Stage(ft): 2.830
      Type: Manhole, Flat Floor



      Stage(ft)        Area(ac)
--------------- ---------------
         -6.540          0.0003
          2.830          0.0003

-------------------------------------------------------------------------------------------
      Name: CDS-07             Base Flow(cfs): 0.000          Init Stage(ft): -0.540
     Group: system-3            Plunge Factor: 1.30           Warn Stage(ft): 3.220
      Type: Manhole, Flat Floor



      Stage(ft)        Area(ac)
--------------- ---------------
         -7.430          0.0001
          3.220          0.0001

-------------------------------------------------------------------------------------------
      Name: CDS-08             Base Flow(cfs): 0.000          Init Stage(ft): -0.540
     Group: system-4            Plunge Factor: 1.30           Warn Stage(ft): 2.760
      Type: Manhole, Flat Floor
```

```
      Stage(ft)        Area(ac)
--------------- ---------------
         -6.540          0.0003
          2.760          0.0003

-------------------------------------------------------------------------------------
      Name: CDS-09              Base Flow(cfs): 0.000          Init Stage(ft): -0.540
     Group: system-4             Plunge Factor: 1.30           Warn Stage(ft): 3.100
      Type: Manhole, Flat Floor


      Stage(ft)        Area(ac)
--------------- ---------------
         -7.350          0.0001
          3.100          0.0001

-------------------------------------------------------------------------------------
      Name: CDS-10              Base Flow(cfs): 0.000          Init Stage(ft): -0.540
     Group: system-4             Plunge Factor: 1.30           Warn Stage(ft): 3.100
      Type: Manhole, Flat Floor


      Stage(ft)        Area(ac)
--------------- ---------------
         -6.540          0.0003
          3.100          0.0003

-------------------------------------------------------------------------------------
      Name: CDS-11              Base Flow(cfs): 0.000          Init Stage(ft): -0.540
     Group: system-4             Plunge Factor: 1.30           Warn Stage(ft): 2.730
      Type: Manhole, Flat Floor


      Stage(ft)        Area(ac)
--------------- ---------------
         -6.540          0.0003
          2.730          0.0003

-------------------------------------------------------------------------------------
      Name: CDS-12              Base Flow(cfs): 0.000          Init Stage(ft): -0.540
     Group: system-5             Plunge Factor: 1.30           Warn Stage(ft): 3.070
      Type: Manhole, Flat Floor


      Stage(ft)        Area(ac)
--------------- ---------------
         -6.950          0.0001
          3.070          0.0001

-------------------------------------------------------------------------------------
      Name: CDS-13              Base Flow(cfs): 0.000          Init Stage(ft): -0.540
     Group: system-5             Plunge Factor: 1.30           Warn Stage(ft): 2.760
      Type: Manhole, Flat Floor


      Stage(ft)        Area(ac)
--------------- ---------------
         -6.540          0.0003
          2.760          0.0003

-------------------------------------------------------------------------------------
      Name: CDS-14              Base Flow(cfs): 0.000          Init Stage(ft): -0.540
     Group: system-6             Plunge Factor: 1.30           Warn Stage(ft): 2.540
      Type: Manhole, Flat Floor
```

Stage(ft)	Area(ac)
-6.540	0.0001
2.540	0.0001

Name: CDS-15 Base Flow(cfs): 0.000 Init Stage(ft): -0.540
Group: system-6 Plunge Factor: 1.30 Warn Stage(ft): 2.830
Type: Manhole, Flat Floor

Stage(ft)	Area(ac)
-6.210	0.0003
2.830	0.0003

Name: CDS-16 Base Flow(cfs): 0.000 Init Stage(ft): -0.540
Group: system-7 Plunge Factor: 1.30 Warn Stage(ft): 2.540
Type: Manhole, Flat Floor

Stage(ft)	Area(ac)
-6.540	0.0001
2.540	0.0001

Name: DW-01A Base Flow(cfs): 0.000 Init Stage(ft): -0.540
Group: system-1 Plunge Factor: 1.30 Warn Stage(ft): 3.310
Type: Manhole, Flat Floor

Stage(ft)	Area(ac)
-5.000	0.0003
3.310	0.0003
3.410	0.0032

Name: DW-01B Base Flow(cfs): 0.000 Init Stage(ft): -0.540
Group: system-1 Warn Stage(ft): 3.360
Type: Stage/Area

Stage(ft)	Area(ac)
-5.000	0.0004
3.360	0.0004
3.460	0.0037

Name: DW-02A Base Flow(cfs): 0.000 Init Stage(ft): -0.540
Group: system-2 Plunge Factor: 1.30 Warn Stage(ft): 2.670
Type: Manhole, Flat Floor

Stage(ft)	Area(ac)
-5.000	0.0003
2.670	0.0003
2.770	0.0032

```
-------------------------------------------------------------------------------------------
      Name: DW-02B              Base Flow(cfs): 0.000          Init Stage(ft): -0.540
     Group: system-2                                          Warn Stage(ft): 2.730
      Type: Stage/Area


      Stage(ft)        Area(ac)
--------------- ---------------
         -5.000          0.0004
          2.730          0.0004
          2.830          0.0037

-------------------------------------------------------------------------------------------
      Name: DW-03A              Base Flow(cfs): 0.000          Init Stage(ft): -0.540
     Group: system-2             Plunge Factor: 1.30           Warn Stage(ft): 2.960
      Type: Manhole, Flat Floor


      Stage(ft)        Area(ac)
--------------- ---------------
         -5.000          0.0003
          2.960          0.0003
          3.060          0.0032

-------------------------------------------------------------------------------------------
      Name: DW-03B              Base Flow(cfs): 0.000          Init Stage(ft): -0.540
     Group: system-2                                          Warn Stage(ft): 3.010
      Type: Stage/Area


      Stage(ft)        Area(ac)
--------------- ---------------
         -5.000          0.0004
          3.010          0.0004
          3.110          0.0037

-------------------------------------------------------------------------------------------
      Name: DW-04A              Base Flow(cfs): 0.000          Init Stage(ft): -0.540
     Group: system-2             Plunge Factor: 1.30           Warn Stage(ft): 3.410
      Type: Manhole, Flat Floor


      Stage(ft)        Area(ac)
--------------- ---------------
         -5.000          0.0003
          3.410          0.0003
          3.510          0.0032

-------------------------------------------------------------------------------------------
      Name: DW-04B              Base Flow(cfs): 0.000          Init Stage(ft): -0.540
     Group: system-2                                          Warn Stage(ft): 3.460
      Type: Stage/Area


      Stage(ft)        Area(ac)
--------------- ---------------
         -5.000          0.0004
          3.460          0.0004
          3.560          0.0037

-------------------------------------------------------------------------------------------
      Name: DW-05A              Base Flow(cfs): 0.000          Init Stage(ft): -0.540
     Group: system-4             Plunge Factor: 1.30           Warn Stage(ft): 2.730
      Type: Manhole, Flat Floor
```

Stage(ft)	Area(ac)
-5.400	0.0003
2.730	0.0003
2.830	0.0032

Name: DW-05B Base Flow(cfs): 0.000 Init Stage(ft): -0.540
Group: system-3 Warn Stage(ft): 2.780
Type: Stage/Area

Stage(ft)	Area(ac)
-5.400	0.0004
2.780	0.0004
2.880	0.0037

Name: DW-06A Base Flow(cfs): 0.000 Init Stage(ft): -0.540
Group: system-3 Plunge Factor: 1.30 Warn Stage(ft): 2.680
Type: Manhole, Flat Floor

Stage(ft)	Area(ac)
-5.000	0.0003
2.680	0.0003
2.780	0.0032

Name: DW-06B Base Flow(cfs): 0.000 Init Stage(ft): -0.540
Group: system-4 Warn Stage(ft): 2.730
Type: Stage/Area

Stage(ft)	Area(ac)
-5.000	0.0004
2.730	0.0004
2.830	0.0037

Name: DW-07A Base Flow(cfs): 0.000 Init Stage(ft): -0.540
Group: system-4 Plunge Factor: 1.30 Warn Stage(ft): 3.070
Type: Manhole, Flat Floor

Stage(ft)	Area(ac)
-5.000	0.0004
3.070	0.0004
3.170	0.0037

Name: DW-07B Base Flow(cfs): 0.000 Init Stage(ft): -0.540
Group: system-4 Warn Stage(ft): 3.120
Type: Stage/Area

Stage(ft)	Area(ac)

```
         -5.000          0.0004
          3.120          0.0004
          3.220          0.0037

-------------------------------------------------------------------------------------------
      Name: DW-08A              Base Flow(cfs): 0.000          Init Stage(ft): -0.540
     Group: system-4             Plunge Factor: 1.30           Warn Stage(ft): 2.660
      Type: Manhole, Flat Floor


      Stage(ft)        Area(ac)
--------------- ---------------
         -5.000          0.0004
          2.660          0.0004
          2.760          0.0037

-------------------------------------------------------------------------------------------
      Name: DW-08B              Base Flow(cfs): 0.000          Init Stage(ft): -0.540
     Group: system-4                                          Warn Stage(ft): 2.720
      Type: Stage/Area


      Stage(ft)        Area(ac)
--------------- ---------------
         -5.000          0.0004
          2.720          0.0004
          2.820          0.0037

-------------------------------------------------------------------------------------------
      Name: DW-09A              Base Flow(cfs): 0.000          Init Stage(ft): -0.540
     Group: system-5             Plunge Factor: 1.30           Warn Stage(ft): 2.680
      Type: Manhole, Flat Floor


      Stage(ft)        Area(ac)
--------------- ---------------
         -5.000          0.0003
          2.680          0.0003
          2.780          0.0032

-------------------------------------------------------------------------------------------
      Name: DW-09B              Base Flow(cfs): 0.000          Init Stage(ft): -0.540
     Group: system-5                                          Warn Stage(ft): 2.730
      Type: Stage/Area


      Stage(ft)        Area(ac)
--------------- ---------------
         -5.000          0.0004
          2.730          0.0004
          2.830          0.0037

-------------------------------------------------------------------------------------------
      Name: DW-10A              Base Flow(cfs): 0.000          Init Stage(ft): -0.540
     Group: system-6             Plunge Factor: 1.30           Warn Stage(ft): 2.460
      Type: Manhole, Flat Floor


      Stage(ft)        Area(ac)
--------------- ---------------
         -5.000          0.0003
          2.460          0.0003
          2.560          0.0032

-------------------------------------------------------------------------------------------
```

```
      Name: DW-10B             Base Flow(cfs): 0.000         Init Stage(ft): -0.540
     Group: system-6                                        Warn Stage(ft): 2.510
      Type: Stage/Area


      Stage(ft)        Area(ac)
--------------- ---------------
         -5.000          0.0004
          2.510          0.0004
          2.610          0.0037

-------------------------------------------------------------------------------------
      Name: DW-11A             Base Flow(cfs): 0.000         Init Stage(ft): -0.540
     Group: system-6            Plunge Factor: 1.30          Warn Stage(ft): 2.800
      Type: Manhole, Flat Floor


      Stage(ft)        Area(ac)
--------------- ---------------
         -5.000          0.0004
          2.800          0.0004
          2.900          0.0037

-------------------------------------------------------------------------------------
      Name: DW-11B             Base Flow(cfs): 0.000         Init Stage(ft): -0.540
     Group: system-6                                        Warn Stage(ft): 2.850
      Type: Stage/Area


      Stage(ft)        Area(ac)
--------------- ---------------
         -5.000          0.0004
          2.850          0.0004
          2.950          0.0037

-------------------------------------------------------------------------------------
      Name: DW-12A             Base Flow(cfs): 0.000         Init Stage(ft): -0.540
     Group: system-7            Plunge Factor: 1.30          Warn Stage(ft): 2.460
      Type: Manhole, Flat Floor


      Stage(ft)        Area(ac)
--------------- ---------------
         -5.000          0.0003
          2.460          0.0003
          2.560          0.0032

-------------------------------------------------------------------------------------
      Name: DW-12B             Base Flow(cfs): 0.000         Init Stage(ft): -0.540
     Group: system-7                                        Warn Stage(ft): 2.510
      Type: Stage/Area


      Stage(ft)        Area(ac)
--------------- ---------------
         -5.000          0.0004
          2.510          0.0004
          2.610          0.0037

-------------------------------------------------------------------------------------
      Name: EW-01              Base Flow(cfs): 0.000         Init Stage(ft): -0.540
     Group: system-1                                        Warn Stage(ft): 3.720
      Type: Stage/Area
```

Stage(ft)	Area(ac)
-4.440	0.0019
3.720	0.0019
3.820	0.0190

Name: EW-02 Base Flow(cfs): 0.000 Init Stage(ft): -0.540
Group: system-3 Warn Stage(ft): 3.520
Type: Stage/Area

Stage(ft)	Area(ac)
-4.440	0.0019
3.520	0.0019
3.620	0.0190

Name: EW-03 Base Flow(cfs): 0.000 Init Stage(ft): -0.540
Group: system-4 Warn Stage(ft): 3.010
Type: Stage/Area

Stage(ft)	Area(ac)
-4.440	0.0019
3.010	0.0019
3.110	0.0190

Name: EW-04 Base Flow(cfs): 0.000 Init Stage(ft): -0.540
Group: system-5 Warn Stage(ft): 3.150
Type: Stage/Area

Stage(ft)	Area(ac)
-4.440	0.0019
3.150	0.0019
3.250	0.0190

Name: EW-05 Base Flow(cfs): 0.000 Init Stage(ft): -0.540
Group: system-6 Warn Stage(ft): 3.300
Type: Stage/Area

Stage(ft)	Area(ac)
-4.440	0.0019
3.300	0.0019
3.400	0.0190

Name: GW Base Flow(cfs): 0.000 Init Stage(ft): -0.540
Group: BASE Warn Stage(ft): 3.930
Type: Time/Stage

Time(hrs)	Stage(ft)
0.00	-0.540
12.00	-0.540

```
         24.00          -0.540
         48.00          -0.540

-------------------------------------------------------------------------------------------
      Name: S-01                Base Flow(cfs): 0.000          Init Stage(ft): -0.540
     Group: system-1                                           Warn Stage(ft): 2.490
      Type: Stage/Area


      Stage(ft)        Area(ac)
--------------- ---------------
        -4.100          0.0003
         2.290          0.0003
         2.490          0.0038

-------------------------------------------------------------------------------------------
      Name: S-02                Base Flow(cfs): 0.000          Init Stage(ft): -0.540
     Group: system-1                                           Warn Stage(ft): 2.490
      Type: Stage/Area


      Stage(ft)        Area(ac)
--------------- ---------------
        -4.000          0.0003
         2.290          0.0003
         2.490          0.0046

-------------------------------------------------------------------------------------------
      Name: S-03                Base Flow(cfs): 0.000          Init Stage(ft): -0.540
     Group: system-1                                           Warn Stage(ft): 2.890
      Type: Stage/Area


      Stage(ft)        Area(ac)
--------------- ---------------
        -4.300          0.0003
         2.690          0.0003
         2.890          0.0122

-------------------------------------------------------------------------------------------
      Name: S-04                Base Flow(cfs): 0.000          Init Stage(ft): -0.540
     Group: system-1                                           Warn Stage(ft): 3.010
      Type: Stage/Area


      Stage(ft)        Area(ac)
--------------- ---------------
        -5.000          0.0003
         2.870          0.0003
         3.010          0.0033

-------------------------------------------------------------------------------------------
      Name: S-05                Base Flow(cfs): 0.000          Init Stage(ft): -0.540
     Group: system-1                                           Warn Stage(ft): 2.880
      Type: Stage/Area


      Stage(ft)        Area(ac)
--------------- ---------------
        -3.600          0.0003
         2.640          0.0003
         2.880          0.0084

-------------------------------------------------------------------------------------------
      Name: S-06                Base Flow(cfs): 0.000          Init Stage(ft): -0.540
```

```
     Group: system-1                                          Warn Stage(ft): 3.260
      Type: Stage/Area


      Stage(ft)        Area(ac)
--------------- ---------------
         -6.250          0.0003
          3.130          0.0003
          3.260          0.0022

-------------------------------------------------------------------------------------
      Name: S-06A               Base Flow(cfs): 0.000          Init Stage(ft): -0.540
     Group: system-1                                          Warn Stage(ft): 2.690
      Type: Stage/Area


      Stage(ft)        Area(ac)
--------------- ---------------
         -6.180          0.0003
          2.640          0.0003
          2.690          0.0030

-------------------------------------------------------------------------------------
      Name: S-07                Base Flow(cfs): 0.000          Init Stage(ft): -0.540
     Group: system-2                                          Warn Stage(ft): 3.080
      Type: Stage/Area


      Stage(ft)        Area(ac)
--------------- ---------------
         -6.100          0.0003
          2.610          0.0003
          3.080          0.0084

-------------------------------------------------------------------------------------
      Name: S-08                Base Flow(cfs): 0.000          Init Stage(ft): -0.540
     Group: system-2                                          Warn Stage(ft): 3.080
      Type: Stage/Area


      Stage(ft)        Area(ac)
--------------- ---------------
         -6.000          0.0003
          2.440          0.0003
          3.080          0.0193

-------------------------------------------------------------------------------------
      Name: S-09                Base Flow(cfs): 0.000          Init Stage(ft): -0.540
     Group: system-2                                          Warn Stage(ft): 2.480
      Type: Stage/Area


      Stage(ft)        Area(ac)
--------------- ---------------
         -5.600          0.0003
          2.220          0.0003
          2.480          0.0084

-------------------------------------------------------------------------------------
      Name: S-10                Base Flow(cfs): 0.000          Init Stage(ft): -0.540
     Group: system-2                                          Warn Stage(ft): 2.480
      Type: Stage/Area
```

Stage(ft)	Area(ac)
-5.400	0.0003
2.080	0.0003
2.480	0.0235

Name: S-11 Base Flow(cfs): 0.000 Init Stage(ft): -0.540
Group: system-2 Warn Stage(ft): 2.940
Type: Stage/Area

Stage(ft)	Area(ac)
-4.200	0.0003
2.510	0.0003
2.940	0.0239

Name: S-12 Base Flow(cfs): 0.000 Init Stage(ft): -0.540
Group: system-2 Warn Stage(ft): 3.150
Type: Stage/Area

Stage(ft)	Area(ac)
-5.400	0.0003
2.850	0.0003
3.150	0.0139

Name: S-12A Base Flow(cfs): 0.000 Init Stage(ft): -0.540
Group: system-2 Warn Stage(ft): 2.730
Type: Stage/Area

Stage(ft)	Area(ac)
-5.500	0.0003
2.720	0.0003
2.730	0.0028

Name: S-13 Base Flow(cfs): 0.000 Init Stage(ft): -0.540
Group: system-2 Warn Stage(ft): 3.410
Type: Stage/Area

Stage(ft)	Area(ac)
-3.800	0.0003
2.960	0.0003
3.410	0.0258

Name: S-14 Base Flow(cfs): 0.000 Init Stage(ft): -0.540
Group: system-3 Warn Stage(ft): 3.310
Type: Stage/Area

Stage(ft)	Area(ac)
-5.600	0.0003
2.860	0.0003
3.310	0.0258

```
-----------------------------------------------------------------------------------------
      Name: S-15                Base Flow(cfs): 0.000          Init Stage(ft): -0.540
     Group: system-3                                           Warn Stage(ft): 3.320
      Type: Stage/Area


      Stage(ft)        Area(ac)
--------------- ---------------
         -5.500          0.0006
          0.730          0.0006
          0.740          0.0003
          2.990          0.0003
          3.320          0.0139

-----------------------------------------------------------------------------------------
      Name: S-16                Base Flow(cfs): 0.000          Init Stage(ft): -0.540
     Group: system-3                                           Warn Stage(ft): 2.730
      Type: Stage/Area


      Stage(ft)        Area(ac)
--------------- ---------------
         -5.900          0.0003
          2.280          0.0003
          2.730          0.0258

-----------------------------------------------------------------------------------------
      Name: S-17                Base Flow(cfs): 0.000          Init Stage(ft): -0.540
     Group: system-3                                           Warn Stage(ft): 2.740
      Type: Stage/Area


      Stage(ft)        Area(ac)
--------------- ---------------
         -5.300          0.0007
          0.160          0.0007
          0.170          0.0003
          2.410          0.0003
          2.740          0.0139

-----------------------------------------------------------------------------------------
      Name: S-17A               Base Flow(cfs): 0.000          Init Stage(ft): -0.540
     Group: system-3                                           Warn Stage(ft): 2.660
      Type: Stage/Area


      Stage(ft)        Area(ac)
--------------- ---------------
         -4.200          0.0003
          2.630          0.0003
          2.660          0.0030

-----------------------------------------------------------------------------------------
      Name: S-18                Base Flow(cfs): 0.000          Init Stage(ft): -0.540
     Group: system-3                                           Warn Stage(ft): 3.220
      Type: Stage/Area


      Stage(ft)        Area(ac)
--------------- ---------------
         -4.000          0.0003
          2.770          0.0003
          3.220          0.0258
```

```
-------------------------------------------------------------------------------------------
      Name: S-19                Base Flow(cfs): 0.000          Init Stage(ft): -0.540
     Group: system-4                                           Warn Stage(ft): 3.070
      Type: Stage/Area


      Stage(ft)        Area(ac)
--------------- ---------------
         -5.600          0.0003
          2.620          0.0003
          3.070          0.0258

-------------------------------------------------------------------------------------------
      Name: S-20                Base Flow(cfs): 0.000          Init Stage(ft): -0.540
     Group: system-4                                           Warn Stage(ft): 3.080
      Type: Stage/Area


      Stage(ft)        Area(ac)
--------------- ---------------
         -5.500          0.0003
          2.750          0.0003
          3.080          0.0139

-------------------------------------------------------------------------------------------
      Name: S-21                Base Flow(cfs): 0.000          Init Stage(ft): -0.540
     Group: system-4                                           Warn Stage(ft): 2.680
      Type: Stage/Area


      Stage(ft)        Area(ac)
--------------- ---------------
         -6.100          0.0003
          2.230          0.0003
          2.680          0.0258

-------------------------------------------------------------------------------------------
      Name: S-22                Base Flow(cfs): 0.000          Init Stage(ft): -0.540
     Group: system-4                                           Warn Stage(ft): 2.690
      Type: Stage/Area


      Stage(ft)        Area(ac)
--------------- ---------------
         -6.000          0.0003
          2.360          0.0003
          2.690          0.0139

-------------------------------------------------------------------------------------------
      Name: S-23                Base Flow(cfs): 0.000          Init Stage(ft): -0.540
     Group: system-4                                           Warn Stage(ft): 3.040
      Type: Stage/Area


      Stage(ft)        Area(ac)
--------------- ---------------
         -4.000          0.0005
          0.490          0.0005
          0.500          0.0003
          2.650          0.0003
          3.040          0.0258

-------------------------------------------------------------------------------------------
      Name: S-24                Base Flow(cfs): 0.000          Init Stage(ft): -0.540
     Group: system-4                                           Warn Stage(ft): 3.070
```

```
      Type: Stage/Area


      Stage(ft)        Area(ac)
--------------- ---------------
         -3.600          0.0003
          2.620          0.0003
          3.070          0.0258

-------------------------------------------------------------------------------------------
      Name: S-25                Base Flow(cfs): 0.000          Init Stage(ft): -0.540
     Group: system-4                                           Warn Stage(ft): 2.680
      Type: Stage/Area


      Stage(ft)        Area(ac)
--------------- ---------------
         -5.800          0.0003
          2.210          0.0003
          2.680          0.0258

-------------------------------------------------------------------------------------------
      Name: S-26                Base Flow(cfs): 0.000          Init Stage(ft): -0.540
     Group: system-4                                           Warn Stage(ft): 2.690
      Type: Stage/Area


      Stage(ft)        Area(ac)
--------------- ---------------
         -5.700          0.0003
          2.380          0.0003
          2.690          0.0139

-------------------------------------------------------------------------------------------
      Name: S-27                Base Flow(cfs): 0.000          Init Stage(ft): -0.540
     Group: system-4                                           Warn Stage(ft): 3.040
      Type: Stage/Area


      Stage(ft)        Area(ac)
--------------- ---------------
         -3.700          0.0003
          2.590          0.0003
          3.040          0.0258

-------------------------------------------------------------------------------------------
      Name: S-28                Base Flow(cfs): 0.000          Init Stage(ft): -0.540
     Group: system-5                                           Warn Stage(ft): 3.070
      Type: Stage/Area


      Stage(ft)        Area(ac)
--------------- ---------------
         -3.600          0.0003
          2.620          0.0003
          3.070          0.0258

-------------------------------------------------------------------------------------------
      Name: S-29                Base Flow(cfs): 0.000          Init Stage(ft): -0.540
     Group: system-5                                           Warn Stage(ft): 2.680
      Type: Stage/Area


      Stage(ft)        Area(ac)
```

```
--------------- ---------------
         -4.500          0.0003
          2.230          0.0003
          2.680          0.0258

-------------------------------------------------------------------------------------------
      Name: S-30                Base Flow(cfs): 0.000          Init Stage(ft): -0.540
     Group: system-5                                           Warn Stage(ft): 2.690
      Type: Stage/Area


      Stage(ft)        Area(ac)
--------------- ---------------
         -3.900          0.0003
          2.360          0.0003
          2.690          0.0139

-------------------------------------------------------------------------------------------
      Name: S-31                Base Flow(cfs): 0.000          Init Stage(ft): -0.540
     Group: system-5                                           Warn Stage(ft): 3.040
      Type: Stage/Area


      Stage(ft)        Area(ac)
--------------- ---------------
         -3.700          0.0003
          2.590          0.0003
          3.040          0.0258

-------------------------------------------------------------------------------------------
      Name: S-32                Base Flow(cfs): 0.000          Init Stage(ft): -0.540
     Group: system-6                                           Warn Stage(ft): 2.920
      Type: Stage/Area


      Stage(ft)        Area(ac)
--------------- ---------------
         -3.700          0.0003
          2.470          0.0003
          2.920          0.0258

-------------------------------------------------------------------------------------------
      Name: S-33                Base Flow(cfs): 0.000          Init Stage(ft): -0.540
     Group: system-6                                           Warn Stage(ft): 2.500
      Type: Stage/Area


      Stage(ft)        Area(ac)
--------------- ---------------
         -4.700          0.0005
          0.000          0.0005
          0.050          0.0003
          2.010          0.0003
          2.500          0.0258

-------------------------------------------------------------------------------------------
      Name: S-34                Base Flow(cfs): 0.000          Init Stage(ft): -0.540
     Group: system-6                                           Warn Stage(ft): 2.510
      Type: Stage/Area


      Stage(ft)        Area(ac)
--------------- ---------------
         -4.000          0.0003
          2.140          0.0003
```

```
         2.510          0.0139

-------------------------------------------------------------------------------------------
      Name: S-35                Base Flow(cfs): 0.000          Init Stage(ft): -0.540
     Group: system-6                                           Warn Stage(ft): 2.850
      Type: Stage/Area


      Stage(ft)        Area(ac)
--------------- ---------------
        -4.400          0.0003
         2.350          0.0003
         2.850          0.0258

-------------------------------------------------------------------------------------------
      Name: S-36                Base Flow(cfs): 0.000          Init Stage(ft): -0.540
     Group: system-7                                           Warn Stage(ft): 3.030
      Type: Stage/Area


      Stage(ft)        Area(ac)
--------------- ---------------
        -4.350          0.0003
         2.550          0.0003
         3.030          0.0258

-------------------------------------------------------------------------------------------
      Name: S-37                Base Flow(cfs): 0.000          Init Stage(ft): -0.540
     Group: system-7                                           Warn Stage(ft): 2.560
      Type: Stage/Area


      Stage(ft)        Area(ac)
--------------- ---------------
        -3.850          0.0003
         2.160          0.0003
         2.560          0.0258

-------------------------------------------------------------------------------------------
      Name: S-38                Base Flow(cfs): 0.000          Init Stage(ft): -0.540
     Group: system-7                                           Warn Stage(ft): 2.560
      Type: Stage/Area


      Stage(ft)        Area(ac)
--------------- ---------------
        -3.750          0.0003
         2.070          0.0003
         2.560          0.0139

===========================================================================================
==== Cross Sections =======================================================================
===========================================================================================

             Name:                              Group: BASE
      Encroachment: No


    Station(ft)   Elevation(ft)     Manning's N
--------------- --------------- ---------------

===========================================================================================
==== Operating Tables =====================================================================
===========================================================================================
```

```
      Name: OT1-EX WELLS         Group: system-1
      Type: Rating Curve
  Function: Head vs. Discharge


       Head(ft)  Discharge(cfs)
--------------- ---------------
           0.96            0.00
           1.00            0.04
           1.50            0.51
           2.00            0.98
           2.38            1.34

-------------------------------------------------------------------------------------
      Name: OT1-NEW WELLS        Group: system-1
      Type: Rating Curve
  Function: Head vs. Discharge


       Head(ft)  Discharge(cfs)
--------------- ---------------
           0.96            0.00
           1.00            0.08
           1.50            1.02
           2.00            1.97
           2.38            2.69

-------------------------------------------------------------------------------------
      Name: OT2-NEW WELLS        Group: system-2
      Type: Rating Curve
  Function: Head vs. Discharge


       Head(ft)  Discharge(cfs)
--------------- ---------------
           0.96            0.00
           1.00            0.08
           1.50            1.02
           2.00            1.97
           2.48            2.88

-------------------------------------------------------------------------------------
      Name: OT3-EX WELLS         Group: system-3
      Type: Rating Curve
  Function: Head vs. Discharge


       Head(ft)  Discharge(cfs)
--------------- ---------------
           0.96            0.00
           1.00            0.04
           1.50            0.51
           2.00            0.98
           2.50            1.46
           2.66            1.61

-------------------------------------------------------------------------------------
      Name: OT3-NEW WELLS        Group: system-3
      Type: Rating Curve
  Function: Head vs. Discharge


       Head(ft)  Discharge(cfs)
--------------- ---------------
           0.96            0.00
```

1.00	0.08
1.50	1.02
2.00	1.97
2.50	2.92
2.66	3.22

Name: OT4-EX WELLS Group: system-4
Type: Rating Curve
Function: Head vs. Discharge

Head(ft)	Discharge(cfs)
0.96	0.00
1.00	0.04
1.50	0.51
2.00	0.98
2.50	1.46
2.68	1.63

Name: OT4-NEW WELLS Group: system-4
Type: Rating Curve
Function: Head vs. Discharge

Head(ft)	Discharge(cfs)
0.96	0.00
1.00	0.08
1.50	1.02
2.00	1.97
2.50	2.92
2.68	3.26

Name: OT5-EX WELLS Group: system-5
Type: Rating Curve
Function: Head vs. Discharge

Head(ft)	Discharge(cfs)
0.96	0.00
1.00	0.04
1.50	0.51
2.00	0.98
2.50	1.46
2.68	1.63

Name: OT5-NEW WELLS Group: system-5
Type: Rating Curve
Function: Head vs. Discharge

Head(ft)	Discharge(cfs)
0.96	0.00
1.00	0.08
1.50	1.02
2.00	1.97
2.50	2.92
2.68	3.26

Name: OT6-EX WELLS Group: system-6
Type: Rating Curve
Function: Head vs. Discharge

Head(ft)	Discharge(cfs)
0.96	0.00
1.00	0.04
1.50	0.51
2.00	0.98
2.45	1.41

Name: OT6-NEW WELLS Group: system-6
Type: Rating Curve
Function: Head vs. Discharge

Head(ft)	Discharge(cfs)
0.96	0.00
1.00	0.08
1.50	1.02
2.00	1.97
2.45	2.82

Name: OT7-NEW WELLS Group: system-7
Type: Rating Curve
Function: Head vs. Discharge

Head(ft)	Discharge(cfs)
0.96	0.00
1.00	0.08
1.50	1.02
2.00	1.97
2.50	2.92
2.56	3.03

==========
==== Pipes ==========
==========

Name: S1-P1 From Node: S-02 Length(ft): 28.00
Group: system-1 To Node: S-01 Count: 1
Friction Equation: Average Conveyance
Solution Algorithm: Most Restrictive
Flow: Both
Entrance Loss Coef: 0.50
Exit Loss Coef: 0.10
Bend Loss Coef: 0.70
Outlet Ctrl Spec: Use dc or tw
Inlet Ctrl Spec: Use dn
Stabilizer Option: None

	UPSTREAM	DOWNSTREAM
Geometry:	Circular	Circular
Span(in):	18.00	18.00
Rise(in):	18.00	18.00
Invert(ft):	-2.000	-2.100
Manning's N:	0.012000	0.012000
Top Clip(in):	0.000	0.000
Bot Clip(in):	0.000	0.000

Upstream FHWA Inlet Edge Description:
Circular Concrete: Square edge w/ headwall

Downstream FHWA Inlet Edge Description:
Circular Concrete: Square edge w/ headwall

```
-----------------------------------------------------------------------------------------------
         Name: S1-P10              From Node: DW-01A             Length(ft): 4.00
        Group: system-1              To Node: CDS-01                  Count: 1
                                                          Friction Equation: Automatic
               UPSTREAM       DOWNSTREAM                  Solution Algorithm: Most Restrictive
     Geometry: Circular       Circular                                  Flow: Both
     Span(in): 18.00          18.00                       Entrance Loss Coef: 0.50
     Rise(in): 18.00          18.00                           Exit Loss Coef: 0.50
   Invert(ft): -0.900         -0.960                          Bend Loss Coef: 0.00
  Manning's N: 0.012000       0.012000                      Outlet Ctrl Spec: Use dc or tw
 Top Clip(in): 0.000          0.000                           Inlet Ctrl Spec: Use dc
 Bot Clip(in): 0.000          0.000                         Stabilizer Option: None


Upstream FHWA Inlet Edge Description:
Circular Concrete: Square edge w/ headwall

Downstream FHWA Inlet Edge Description:
Circular Concrete: Square edge w/ headwall


-----------------------------------------------------------------------------------------------
         Name: S1-P2               From Node: S-01               Length(ft): 85.00
        Group: system-1              To Node: S-03                  Count: 1
                                                          Friction Equation: Average Conveyance
               UPSTREAM       DOWNSTREAM                  Solution Algorithm: Most Restrictive
     Geometry: Circular       Circular                                  Flow: Both
     Span(in): 18.00          18.00                       Entrance Loss Coef: 0.50
     Rise(in): 18.00          18.00                           Exit Loss Coef: 0.10
   Invert(ft): -2.100         -2.300                          Bend Loss Coef: 0.00
  Manning's N: 0.012000       0.012000                      Outlet Ctrl Spec: Use dc or tw
 Top Clip(in): 0.000          0.000                           Inlet Ctrl Spec: Use dn
 Bot Clip(in): 0.000          0.000                         Stabilizer Option: None


Upstream FHWA Inlet Edge Description:
Circular Concrete: Square edge w/ headwall

Downstream FHWA Inlet Edge Description:
Circular Concrete: Square edge w/ headwall


-----------------------------------------------------------------------------------------------
         Name: S1-P3               From Node: S-03               Length(ft): 77.00
        Group: system-1              To Node: S-04                  Count: 1
                                                          Friction Equation: Average Conveyance
               UPSTREAM       DOWNSTREAM                  Solution Algorithm: Most Restrictive
     Geometry: Circular       Circular                                  Flow: Both
     Span(in): 18.00          18.00                       Entrance Loss Coef: 0.50
     Rise(in): 18.00          18.00                           Exit Loss Coef: 0.10
   Invert(ft): -2.300         -2.900                          Bend Loss Coef: 0.70
  Manning's N: 0.012000       0.012000                      Outlet Ctrl Spec: Use dc or tw
 Top Clip(in): 0.000          0.000                           Inlet Ctrl Spec: Use dn
 Bot Clip(in): 0.000          0.000                         Stabilizer Option: None


Upstream FHWA Inlet Edge Description:
Circular Concrete: Square edge w/ headwall

Downstream FHWA Inlet Edge Description:
Circular Concrete: Square edge w/ headwall
```

```
-----------------------------------------------------------------------------------------------
         Name: S1-P4              From Node: S-05              Length(ft): 31.00
        Group: system-1             To Node: S-04                   Count: 1
                                                          Friction Equation: Average Conveyance
              UPSTREAM       DOWNSTREAM                 Solution Algorithm: Most Restrictive
     Geometry: Circular       Circular                               Flow: Both
     Span(in): 18.00          18.00                      Entrance Loss Coef: 0.50
     Rise(in): 18.00          18.00                          Exit Loss Coef: 0.10
   Invert(ft): -1.600         -1.700                         Bend Loss Coef: 0.00
  Manning's N: 0.012000       0.012000                     Outlet Ctrl Spec: Use dc or tw
 Top Clip(in): 0.000          0.000                          Inlet Ctrl Spec: Use dn
 Bot Clip(in): 0.000          0.000                       Stabilizer Option: None


Upstream FHWA Inlet Edge Description:
Circular Concrete: Square edge w/ headwall

Downstream FHWA Inlet Edge Description:
Circular Concrete: Square edge w/ headwall


-----------------------------------------------------------------------------------------------
         Name: S1-P5              From Node: S-06              Length(ft): 117.00
        Group: system-1             To Node: S-04                   Count: 1
                                                          Friction Equation: Average Conveyance
              UPSTREAM       DOWNSTREAM                 Solution Algorithm: Most Restrictive
     Geometry: Circular       Circular                               Flow: Both
     Span(in): 18.00          18.00                      Entrance Loss Coef: 0.50
     Rise(in): 18.00          18.00                          Exit Loss Coef: 0.10
   Invert(ft): -2.800         -3.000                         Bend Loss Coef: 0.70
  Manning's N: 0.012000       0.012000                     Outlet Ctrl Spec: Use dc or tw
 Top Clip(in): 0.000          0.000                          Inlet Ctrl Spec: Use dn
 Bot Clip(in): 0.000          0.000                       Stabilizer Option: None


Upstream FHWA Inlet Edge Description:
Circular Concrete: Square edge w/ headwall

Downstream FHWA Inlet Edge Description:
Circular Concrete: Square edge w/ headwall


-----------------------------------------------------------------------------------------------
         Name: S1-P6              From Node: S-04              Length(ft): 4.00
        Group: system-1             To Node: DW-01A                 Count: 1
                                                          Friction Equation: Average Conveyance
              UPSTREAM       DOWNSTREAM                 Solution Algorithm: Most Restrictive
     Geometry: Circular       Circular                               Flow: Both
     Span(in): 24.00          24.00                      Entrance Loss Coef: 0.50
     Rise(in): 24.00          24.00                          Exit Loss Coef: 0.10
   Invert(ft): -2.900         -3.000                         Bend Loss Coef: 0.70
  Manning's N: 0.012000       0.012000                     Outlet Ctrl Spec: Use dc or tw
 Top Clip(in): 0.000          0.000                          Inlet Ctrl Spec: Use dn
 Bot Clip(in): 0.000          0.000                       Stabilizer Option: None


Upstream FHWA Inlet Edge Description:
Circular Concrete: Square edge w/ headwall

Downstream FHWA Inlet Edge Description:
Circular Concrete: Square edge w/ headwall
```

```
-----------------------------------------------------------------------------------------------
         Name: S1-P7              From Node: S-06              Length(ft): 4.00
        Group: system-1             To Node: CDS-02                 Count: 1
                                                        Friction Equation: Average Conveyance
               UPSTREAM       DOWNSTREAM                Solution Algorithm: Most Restrictive
     Geometry: Circular       Circular                             Flow: Both
     Span(in): 18.00          18.00                     Entrance Loss Coef: 0.50
     Rise(in): 18.00          18.00                         Exit Loss Coef: 0.10
   Invert(ft): -1.350         -1.450                        Bend Loss Coef: 0.70
  Manning's N: 0.012000       0.012000                    Outlet Ctrl Spec: Use dc or tw
 Top Clip(in): 0.000          0.000                         Inlet Ctrl Spec: Use dn
 Bot Clip(in): 0.000          0.000                       Stabilizer Option: None


Upstream FHWA Inlet Edge Description:
Circular Concrete: Square edge w/ headwall

Downstream FHWA Inlet Edge Description:
Circular Concrete: Square edge w/ headwall


-----------------------------------------------------------------------------------------------
         Name: S1-P8              From Node: S-06A             Length(ft): 51.00
        Group: system-1             To Node: S-06                   Count: 1
                                                        Friction Equation: Average Conveyance
               UPSTREAM       DOWNSTREAM                Solution Algorithm: Most Restrictive
     Geometry: Circular       Circular                             Flow: Both
     Span(in): 18.00          18.00                     Entrance Loss Coef: 0.50
     Rise(in): 18.00          18.00                         Exit Loss Coef: 0.10
   Invert(ft): -6.180         -6.250                        Bend Loss Coef: 0.70
  Manning's N: 0.012000       0.012000                    Outlet Ctrl Spec: Use dc or tw
 Top Clip(in): 0.000          0.000                         Inlet Ctrl Spec: Use dn
 Bot Clip(in): 0.000          0.000                       Stabilizer Option: None


Upstream FHWA Inlet Edge Description:
Circular Concrete: Square edge w/ headwall

Downstream FHWA Inlet Edge Description:
Circular Concrete: Square edge w/ headwall


-----------------------------------------------------------------------------------------------
         Name: S2-P1              From Node: S-08              Length(ft): 44.00
        Group: system-2             To Node: S-07                   Count: 1
                                                        Friction Equation: Average Conveyance
               UPSTREAM       DOWNSTREAM                Solution Algorithm: Most Restrictive
     Geometry: Circular       Circular                             Flow: Both
     Span(in): 18.00          18.00                     Entrance Loss Coef: 0.50
     Rise(in): 18.00          18.00                         Exit Loss Coef: 0.10
   Invert(ft): -6.000         -6.100                        Bend Loss Coef: 0.70
  Manning's N: 0.012000       0.012000                    Outlet Ctrl Spec: Use dc or tw
 Top Clip(in): 0.000          0.000                         Inlet Ctrl Spec: Use dn
 Bot Clip(in): 0.000          0.000                       Stabilizer Option: None


Upstream FHWA Inlet Edge Description:
Circular Concrete: Square edge w/ headwall

Downstream FHWA Inlet Edge Description:
Circular Concrete: Square edge w/ headwall


-----------------------------------------------------------------------------------------------
```

```
         Name: S2-P10             From Node: DW-03A            Length(ft): 4.00
        Group: system-2             To Node: CDS-04                 Count: 1
                                                          Friction Equation: Average Conveyance
              UPSTREAM       DOWNSTREAM                  Solution Algorithm: Most Restrictive
     Geometry: Circular       Circular                               Flow: Both
     Span(in): 18.00          18.00                       Entrance Loss Coef: 0.50
     Rise(in): 18.00          18.00                           Exit Loss Coef: 0.10
   Invert(ft): -0.900         -0.960                          Bend Loss Coef: 0.70
  Manning's N: 0.012000       0.012000                      Outlet Ctrl Spec: Use dc or tw
 Top Clip(in): 0.000          0.000                           Inlet Ctrl Spec: Use dc
 Bot Clip(in): 0.000          0.000                         Stabilizer Option: None


Upstream FHWA Inlet Edge Description:
Circular Concrete: Square edge w/ headwall

Downstream FHWA Inlet Edge Description:
Circular Concrete: Square edge w/ headwall


-----------------------------------------------------------------------------------------------
         Name: S2-P11             From Node: S-13              Length(ft): 4.00
        Group: system-2             To Node: DW-04A                 Count: 1
                                                          Friction Equation: Average Conveyance
              UPSTREAM       DOWNSTREAM                  Solution Algorithm: Most Restrictive
     Geometry: Circular       Circular                               Flow: Both
     Span(in): 24.00          24.00                       Entrance Loss Coef: 0.50
     Rise(in): 24.00          24.00                           Exit Loss Coef: 0.10
   Invert(ft): -1.800         -1.900                          Bend Loss Coef: 0.70
  Manning's N: 0.012000       0.012000                      Outlet Ctrl Spec: Use dc or tw
 Top Clip(in): 0.000          0.000                           Inlet Ctrl Spec: Use dc
 Bot Clip(in): 0.000          0.000                         Stabilizer Option: None


Upstream FHWA Inlet Edge Description:
Circular Concrete: Square edge w/ headwall

Downstream FHWA Inlet Edge Description:
Circular Concrete: Square edge w/ headwall


-----------------------------------------------------------------------------------------------
         Name: S2-P12             From Node: DW-04A            Length(ft): 4.00
        Group: system-2             To Node: CDS-05                 Count: 1
                                                          Friction Equation: Average Conveyance
              UPSTREAM       DOWNSTREAM                  Solution Algorithm: Most Restrictive
     Geometry: Circular       Circular                               Flow: Both
     Span(in): 18.00          18.00                       Entrance Loss Coef: 0.50
     Rise(in): 18.00          18.00                           Exit Loss Coef: 0.10
   Invert(ft): -0.900         -0.960                          Bend Loss Coef: 0.70
  Manning's N: 0.012000       0.012000                      Outlet Ctrl Spec: Use dc or tw
 Top Clip(in): 0.000          0.000                           Inlet Ctrl Spec: Use dc
 Bot Clip(in): 0.000          0.000                         Stabilizer Option: None


Upstream FHWA Inlet Edge Description:
Circular Concrete: Square edge w/ headwall

Downstream FHWA Inlet Edge Description:
Circular Concrete: Square edge w/ headwall


-----------------------------------------------------------------------------------------------
         Name: S2-P2              From Node: S-07              Length(ft): 127.00
```

```
        Group: system-2             To Node: S-09                   Count: 1
                                                         Friction Equation: Average Conveyance
              UPSTREAM       DOWNSTREAM                 Solution Algorithm: Most Restrictive
     Geometry: Circular       Circular                               Flow: Both
     Span(in): 18.00          18.00                     Entrance Loss Coef: 0.50
     Rise(in): 18.00          18.00                         Exit Loss Coef: 0.10
   Invert(ft): -3.800         -4.000                        Bend Loss Coef: 0.70
  Manning's N: 0.012000       0.012000                    Outlet Ctrl Spec: Use dc or tw
 Top Clip(in): 0.000          0.000                         Inlet Ctrl Spec: Use dn
 Bot Clip(in): 0.000          0.000                        Stabilizer Option: None


Upstream FHWA Inlet Edge Description:
Circular Concrete: Square edge w/ headwall

Downstream FHWA Inlet Edge Description:
Circular Concrete: Square edge w/ headwall


-------------------------------------------------------------------------------------------------
         Name: S2-P3              From Node: S-12              Length(ft): 48.50
        Group: system-2             To Node: S-12A                  Count: 1
                                                         Friction Equation: Average Conveyance
              UPSTREAM       DOWNSTREAM                 Solution Algorithm: Most Restrictive
     Geometry: Circular       Circular                               Flow: Both
     Span(in): 18.00          18.00                     Entrance Loss Coef: 0.50
     Rise(in): 18.00          18.00                         Exit Loss Coef: 0.10
   Invert(ft): -3.400         -3.500                        Bend Loss Coef: 0.70
  Manning's N: 0.012000       0.012000                    Outlet Ctrl Spec: Use dc or tw
 Top Clip(in): 0.000          0.000                         Inlet Ctrl Spec: Use dc
 Bot Clip(in): 0.000          0.000                        Stabilizer Option: None


Upstream FHWA Inlet Edge Description:
Circular Concrete: Square edge w/ headwall

Downstream FHWA Inlet Edge Description:
Circular Concrete: Square edge w/ headwall


-------------------------------------------------------------------------------------------------
         Name: S2-P4              From Node: S-10              Length(ft): 45.00
        Group: system-2             To Node: S-09                   Count: 1
                                                         Friction Equation: Average Conveyance
              UPSTREAM       DOWNSTREAM                 Solution Algorithm: Most Restrictive
     Geometry: Circular       Circular                               Flow: Both
     Span(in): 18.00          18.00                     Entrance Loss Coef: 0.50
     Rise(in): 18.00          18.00                         Exit Loss Coef: 0.10
   Invert(ft): -5.400         -5.600                        Bend Loss Coef: 0.00
  Manning's N: 0.012000       0.012000                    Outlet Ctrl Spec: Use dc or tw
 Top Clip(in): 0.000          0.000                         Inlet Ctrl Spec: Use dn
 Bot Clip(in): 0.000          0.000                        Stabilizer Option: None


Upstream FHWA Inlet Edge Description:
Circular Concrete: Square edge w/ headwall

Downstream FHWA Inlet Edge Description:
Circular Concrete: Square edge w/ headwall


-------------------------------------------------------------------------------------------------
         Name: S2-P5              From Node: S-11              Length(ft): 146.00
        Group: system-2             To Node: S-09                   Count: 1
```

```
                                                        Friction Equation: Average Conveyance
              UPSTREAM       DOWNSTREAM                 Solution Algorithm: Most Restrictive
     Geometry: Circular       Circular                               Flow: Both
     Span(in): 18.00          18.00                    Entrance Loss Coef: 0.50
     Rise(in): 18.00          18.00                        Exit Loss Coef: 0.10
   Invert(ft): -1.700         -2.100                       Bend Loss Coef: 0.70
  Manning's N: 0.012000       0.012000                   Outlet Ctrl Spec: Use dc or tw
 Top Clip(in): 0.000          0.000                        Inlet Ctrl Spec: Use dn
 Bot Clip(in): 0.000          0.000                       Stabilizer Option: None


Upstream FHWA Inlet Edge Description:
Circular Concrete: Square edge w/ headwall

Downstream FHWA Inlet Edge Description:
Circular Concrete: Square edge w/ headwall


-----------------------------------------------------------------------------------------------------
         Name: S2-P6a              From Node: S-12A              Length(ft): 56.00
        Group: system-2              To Node: S-11                    Count: 1
                                                        Friction Equation: Average Conveyance
              UPSTREAM       DOWNSTREAM                 Solution Algorithm: Most Restrictive
     Geometry: Circular       Circular                               Flow: Both
     Span(in): 18.00          18.00                    Entrance Loss Coef: 0.50
     Rise(in): 18.00          18.00                        Exit Loss Coef: 0.10
   Invert(ft): -1.400         -1.700                       Bend Loss Coef: 0.70
  Manning's N: 0.012000       0.012000                   Outlet Ctrl Spec: Use dc or tw
 Top Clip(in): 0.000          0.000                        Inlet Ctrl Spec: Use dc
 Bot Clip(in): 0.000          0.000                       Stabilizer Option: None


Upstream FHWA Inlet Edge Description:
Circular Concrete: Square edge w/ headwall

Downstream FHWA Inlet Edge Description:
Circular Concrete: Square edge w/ headwall


-----------------------------------------------------------------------------------------------------
         Name: S2-P6b              From Node: S-12A              Length(ft): 85.50
        Group: system-2              To Node: S-13                    Count: 1
                                                        Friction Equation: Average Conveyance
              UPSTREAM       DOWNSTREAM                 Solution Algorithm: Most Restrictive
     Geometry: Circular       Circular                               Flow: Both
     Span(in): 18.00          18.00                    Entrance Loss Coef: 0.50
     Rise(in): 18.00          18.00                        Exit Loss Coef: 0.10
   Invert(ft): -1.400         -1.800                       Bend Loss Coef: 0.70
  Manning's N: 0.012000       0.012000                   Outlet Ctrl Spec: Use dc or tw
 Top Clip(in): 0.000          0.000                        Inlet Ctrl Spec: Use dn
 Bot Clip(in): 0.000          0.000                       Stabilizer Option: None


Upstream FHWA Inlet Edge Description:
Circular Concrete: Square edge w/ headwall

Downstream FHWA Inlet Edge Description:
Circular Concrete: Square edge w/ headwall


-----------------------------------------------------------------------------------------------------
         Name: S2-P7               From Node: S-09               Length(ft): 4.00
        Group: system-2              To Node: DW-02A                  Count: 1
                                                        Friction Equation: Average Conveyance
```

```
               UPSTREAM       DOWNSTREAM                 Solution Algorithm: Most Restrictive
     Geometry: Circular       Circular                                  Flow: Both
     Span(in): 24.00          24.00                    Entrance Loss Coef: 0.50
     Rise(in): 24.00          24.00                        Exit Loss Coef: 0.10
   Invert(ft): -4.000         -4.100                       Bend Loss Coef: 0.00
  Manning's N: 0.012000       0.012000                   Outlet Ctrl Spec: Use dc or tw
 Top Clip(in): 0.000          0.000                        Inlet Ctrl Spec: Use dn
 Bot Clip(in): 0.000          0.000                     Stabilizer Option: None


Upstream FHWA Inlet Edge Description:
Circular Concrete: Square edge w/ headwall

Downstream FHWA Inlet Edge Description:
Circular Concrete: Square edge w/ headwall


-----------------------------------------------------------------------------------------------
         Name: S2-P8               From Node: S-11               Length(ft): 4.00
        Group: system-2              To Node: DW-03A                  Count: 1
                                                             Friction Equation: Average Conveyance
               UPSTREAM       DOWNSTREAM                 Solution Algorithm: Most Restrictive
     Geometry: Circular       Circular                                  Flow: Both
     Span(in): 24.00          24.00                    Entrance Loss Coef: 0.50
     Rise(in): 24.00          24.00                        Exit Loss Coef: 0.10
   Invert(ft): -2.200         -2.300                       Bend Loss Coef: 0.00
  Manning's N: 0.012000       0.012000                   Outlet Ctrl Spec: Use dc or tw
 Top Clip(in): 0.000          0.000                        Inlet Ctrl Spec: Use dn
 Bot Clip(in): 0.000          0.000                     Stabilizer Option: None


Upstream FHWA Inlet Edge Description:
Circular Concrete: Square edge w/ headwall

Downstream FHWA Inlet Edge Description:
Circular Concrete: Square edge w/ headwall


-----------------------------------------------------------------------------------------------
         Name: S2-P9               From Node: DW-02A             Length(ft): 4.00
        Group: system-2              To Node: CDS-03                  Count: 1
                                                             Friction Equation: Average Conveyance
               UPSTREAM       DOWNSTREAM                 Solution Algorithm: Most Restrictive
     Geometry: Circular       Circular                                  Flow: Both
     Span(in): 18.00          18.00                    Entrance Loss Coef: 0.50
     Rise(in): 18.00          18.00                        Exit Loss Coef: 0.10
   Invert(ft): -0.900         -0.960                       Bend Loss Coef: 0.70
  Manning's N: 0.012000       0.012000                   Outlet Ctrl Spec: Use dc or tw
 Top Clip(in): 0.000          0.000                        Inlet Ctrl Spec: Use dc
 Bot Clip(in): 0.000          0.000                     Stabilizer Option: None


Upstream FHWA Inlet Edge Description:
Circular Concrete: Square edge w/ headwall

Downstream FHWA Inlet Edge Description:
Circular Concrete: Square edge w/ headwall


-----------------------------------------------------------------------------------------------
         Name: S3-P1               From Node: S-15               Length(ft): 50.00
        Group: system-3              To Node: S-14                    Count: 1
                                                             Friction Equation: Average Conveyance
               UPSTREAM       DOWNSTREAM                 Solution Algorithm: Most Restrictive
```

```
     Geometry: Circular       Circular                                Flow: Both
     Span(in): 18.00          18.00                     Entrance Loss Coef: 0.50
     Rise(in): 18.00          18.00                         Exit Loss Coef: 0.10
   Invert(ft): -3.500         -3.600                        Bend Loss Coef: 0.70
  Manning's N: 0.012000       0.012000                    Outlet Ctrl Spec: Use dc or tw
 Top Clip(in): 0.000          0.000                         Inlet Ctrl Spec: Use dn
 Bot Clip(in): 0.000          0.000                      Stabilizer Option: None


Upstream FHWA Inlet Edge Description:
Circular Concrete: Square edge w/ headwall

Downstream FHWA Inlet Edge Description:
Circular Concrete: Square edge w/ headwall


-----------------------------------------------------------------------------------------------
         Name: S3-P2               From Node: S-14               Length(ft): 184.00
        Group: system-3              To Node: S-16                    Count: 1
                                                             Friction Equation: Average Conveyance
              UPSTREAM       DOWNSTREAM                     Solution Algorithm: Most Restrictive
     Geometry: Circular       Circular                                Flow: Both
     Span(in): 18.00          18.00                     Entrance Loss Coef: 0.50
     Rise(in): 18.00          18.00                         Exit Loss Coef: 0.10
   Invert(ft): -3.600         -3.900                        Bend Loss Coef: 0.70
  Manning's N: 0.012000       0.012000                    Outlet Ctrl Spec: Use dc or tw
 Top Clip(in): 0.000          0.000                         Inlet Ctrl Spec: Use dn
 Bot Clip(in): 0.000          0.000                      Stabilizer Option: None


Upstream FHWA Inlet Edge Description:
Circular Concrete: Square edge w/ headwall

Downstream FHWA Inlet Edge Description:
Circular Concrete: Square edge w/ headwall


-----------------------------------------------------------------------------------------------
         Name: S3-P3               From Node: S-17               Length(ft): 48.00
        Group: system-3              To Node: S-16                    Count: 1
                                                             Friction Equation: Average Conveyance
              UPSTREAM       DOWNSTREAM                     Solution Algorithm: Most Restrictive
     Geometry: Circular       Circular                                Flow: Both
     Span(in): 18.00          18.00                     Entrance Loss Coef: 0.50
     Rise(in): 18.00          18.00                         Exit Loss Coef: 0.10
   Invert(ft): -3.300         -3.400                        Bend Loss Coef: 0.00
  Manning's N: 0.012000       0.012000                    Outlet Ctrl Spec: Use dc or tw
 Top Clip(in): 0.000          0.000                         Inlet Ctrl Spec: Use dn
 Bot Clip(in): 0.000          0.000                      Stabilizer Option: None


Upstream FHWA Inlet Edge Description:
Circular Concrete: Square edge w/ headwall

Downstream FHWA Inlet Edge Description:
Circular Concrete: Square edge w/ headwall


-----------------------------------------------------------------------------------------------
         Name: S3-P4               From Node: S-18               Length(ft): 163.00
        Group: system-3              To Node: S-16                    Count: 1
                                                             Friction Equation: Average Conveyance
              UPSTREAM       DOWNSTREAM                     Solution Algorithm: Most Restrictive
     Geometry: Circular       Circular                                Flow: Both
```

```
     Span(in): 18.00          18.00                      Entrance Loss Coef: 0.50
     Rise(in): 18.00          18.00                          Exit Loss Coef: 0.10
   Invert(ft): -2.000         -2.300                         Bend Loss Coef: 0.70
  Manning's N: 0.012000       0.012000                     Outlet Ctrl Spec: Use dc or tw
 Top Clip(in): 0.000          0.000                         Inlet Ctrl Spec: Use dn
 Bot Clip(in): 0.000          0.000                       Stabilizer Option: None


Upstream FHWA Inlet Edge Description:
Circular Concrete: Square edge w/ headwall

Downstream FHWA Inlet Edge Description:
Circular Concrete: Square edge w/ headwall


-----------------------------------------------------------------------------------------------
         Name: S3-P5               From Node: S-16               Length(ft): 4.00
        Group: system-3              To Node: DW-05A                  Count: 1
                                                             Friction Equation: Average Conveyance
              UPSTREAM       DOWNSTREAM                     Solution Algorithm: Most Restrictive
     Geometry: Circular       Circular                                   Flow: Both
     Span(in): 24.00          24.00                          Entrance Loss Coef: 0.50
     Rise(in): 24.00          24.00                              Exit Loss Coef: 0.10
   Invert(ft): -3.900         -4.000                             Bend Loss Coef: 0.00
  Manning's N: 0.012000       0.012000                     Outlet Ctrl Spec: Use dc or tw
 Top Clip(in): 0.000          0.000                         Inlet Ctrl Spec: Use dn
 Bot Clip(in): 0.000          0.000                       Stabilizer Option: None


Upstream FHWA Inlet Edge Description:
Circular Concrete: Square edge w/ headwall

Downstream FHWA Inlet Edge Description:
Circular Concrete: Square edge w/ headwall


-----------------------------------------------------------------------------------------------
         Name: S3-P6               From Node: S-18               Length(ft): 4.00
        Group: system-3              To Node: CDS-07                  Count: 1
                                                             Friction Equation: Average Conveyance
              UPSTREAM       DOWNSTREAM                     Solution Algorithm: Most Restrictive
     Geometry: Circular       Circular                                   Flow: Both
     Span(in): 18.00          18.00                          Entrance Loss Coef: 0.50
     Rise(in): 18.00          18.00                              Exit Loss Coef: 0.10
   Invert(ft): -1.800         -1.850                             Bend Loss Coef: 0.70
  Manning's N: 0.012000       0.012000                     Outlet Ctrl Spec: Use dc or tw
 Top Clip(in): 0.000          0.000                         Inlet Ctrl Spec: Use dn
 Bot Clip(in): 0.000          0.000                       Stabilizer Option: None


Upstream FHWA Inlet Edge Description:
Circular Concrete: Square edge w/ headwall

Downstream FHWA Inlet Edge Description:
Circular Concrete: Square edge w/ headwall


-----------------------------------------------------------------------------------------------
         Name: S3-P7               From Node: DW-05A             Length(ft): 4.00
        Group: system-2              To Node: CDS-06                  Count: 1
                                                             Friction Equation: Average Conveyance
              UPSTREAM       DOWNSTREAM                     Solution Algorithm: Most Restrictive
     Geometry: Circular       Circular                                   Flow: Both
     Span(in): 18.00          18.00                          Entrance Loss Coef: 0.50
```

```
     Rise(in): 18.00          18.00                          Exit Loss Coef: 0.10
   Invert(ft): -0.900         -0.960                         Bend Loss Coef: 0.70
  Manning's N: 0.012000       0.012000                     Outlet Ctrl Spec: Use dc or tw
 Top Clip(in): 0.000          0.000                         Inlet Ctrl Spec: Use dc
 Bot Clip(in): 0.000          0.000                       Stabilizer Option: None


Upstream FHWA Inlet Edge Description:
Circular Concrete: Square edge w/ headwall

Downstream FHWA Inlet Edge Description:
Circular Concrete: Square edge w/ headwall


-----------------------------------------------------------------------------------------------
         Name: S3-P8               From Node: S-17A              Length(ft): 70.00
        Group: system-3              To Node: S-17                   Count: 1
                                                             Friction Equation: Average Conveyance
              UPSTREAM       DOWNSTREAM                    Solution Algorithm: Most Restrictive
     Geometry: Circular       Circular                                  Flow: Both
     Span(in): 18.00          18.00                         Entrance Loss Coef: 0.50
     Rise(in): 18.00          18.00                             Exit Loss Coef: 0.10
   Invert(ft): -2.200         -2.400                            Bend Loss Coef: 0.70
  Manning's N: 0.012000       0.012000                     Outlet Ctrl Spec: Use dc or tw
 Top Clip(in): 0.000          0.000                         Inlet Ctrl Spec: Use dn
 Bot Clip(in): 0.000          0.000                       Stabilizer Option: None


Upstream FHWA Inlet Edge Description:
Circular Concrete: Square edge w/ headwall

Downstream FHWA Inlet Edge Description:
Circular Concrete: Square edge w/ headwall


-----------------------------------------------------------------------------------------------
         Name: S4-P1               From Node: S-20               Length(ft): 49.50
        Group: system-4              To Node: S-19                   Count: 1
                                                             Friction Equation: Average Conveyance
              UPSTREAM       DOWNSTREAM                    Solution Algorithm: Most Restrictive
     Geometry: Circular       Circular                                  Flow: Both
     Span(in): 18.00          18.00                         Entrance Loss Coef: 0.50
     Rise(in): 18.00          18.00                             Exit Loss Coef: 0.10
   Invert(ft): -3.500         -3.600                            Bend Loss Coef: 0.70
  Manning's N: 0.012000       0.012000                     Outlet Ctrl Spec: Use dc or tw
 Top Clip(in): 0.000          0.000                         Inlet Ctrl Spec: Use dn
 Bot Clip(in): 0.000          0.000                       Stabilizer Option: None


Upstream FHWA Inlet Edge Description:
Circular Concrete: Square edge w/ headwall

Downstream FHWA Inlet Edge Description:
Circular Concrete: Square edge w/ headwall


-----------------------------------------------------------------------------------------------
         Name: S4-P10              From Node: S-27               Length(ft): 117.00
        Group: system-4              To Node: S-25                   Count: 1
                                                             Friction Equation: Average Conveyance
              UPSTREAM       DOWNSTREAM                    Solution Algorithm: Most Restrictive
     Geometry: Circular       Circular                                  Flow: Both
     Span(in): 18.00          18.00                         Entrance Loss Coef: 0.50
     Rise(in): 18.00          18.00                             Exit Loss Coef: 0.10
```

```
   Invert(ft): -1.700         -2.000                        Bend Loss Coef: 0.70
  Manning's N: 0.012000       0.012000                    Outlet Ctrl Spec: Use dc or tw
 Top Clip(in): 0.000          0.000                        Inlet Ctrl Spec: Use dn
 Bot Clip(in): 0.000          0.000                       Stabilizer Option: None


Upstream FHWA Inlet Edge Description:
Circular Concrete: Square edge w/ headwall

Downstream FHWA Inlet Edge Description:
Circular Concrete: Square edge w/ headwall


-----------------------------------------------------------------------------------------------
         Name: S4-P11              From Node: S-25              Length(ft): 4.00
        Group: system-4              To Node: DW-08A                 Count: 1
                                                           Friction Equation: Average Conveyance
              UPSTREAM       DOWNSTREAM                   Solution Algorithm: Most Restrictive
     Geometry: Circular       Circular                                 Flow: Both
     Span(in): 24.00          24.00                       Entrance Loss Coef: 0.50
     Rise(in): 24.00          24.00                           Exit Loss Coef: 0.10
   Invert(ft): -3.800         -3.900                          Bend Loss Coef: 0.70
  Manning's N: 0.012000       0.012000                    Outlet Ctrl Spec: Use dc or tw
 Top Clip(in): 0.000          0.000                        Inlet Ctrl Spec: Use dc
 Bot Clip(in): 0.000          0.000                       Stabilizer Option: None


Upstream FHWA Inlet Edge Description:
Circular Concrete: Square edge w/ headwall

Downstream FHWA Inlet Edge Description:
Circular Concrete: Square edge w/ headwall


-----------------------------------------------------------------------------------------------
         Name: S4-P12              From Node: DW-06A            Length(ft): 4.00
        Group: system-4              To Node: CDS-08                 Count: 1
                                                           Friction Equation: Average Conveyance
              UPSTREAM       DOWNSTREAM                   Solution Algorithm: Most Restrictive
     Geometry: Circular       Circular                                 Flow: Both
     Span(in): 18.00          18.00                       Entrance Loss Coef: 0.50
     Rise(in): 18.00          18.00                           Exit Loss Coef: 0.10
   Invert(ft): -0.900         -0.960                          Bend Loss Coef: 0.70
  Manning's N: 0.012000       0.012000                    Outlet Ctrl Spec: Use dc or tw
 Top Clip(in): 0.000          0.000                        Inlet Ctrl Spec: Use dc
 Bot Clip(in): 0.000          0.000                       Stabilizer Option: None


Upstream FHWA Inlet Edge Description:
Circular Concrete: Square edge w/ headwall

Downstream FHWA Inlet Edge Description:
Circular Concrete: Square edge w/ headwall


-----------------------------------------------------------------------------------------------
         Name: S4-P13              From Node: S-24              Length(ft): 4.00
        Group: system-4              To Node: DW-07A                 Count: 1
                                                           Friction Equation: Average Conveyance
              UPSTREAM       DOWNSTREAM                   Solution Algorithm: Most Restrictive
     Geometry: Circular       Circular                                 Flow: Both
     Span(in): 24.00          24.00                       Entrance Loss Coef: 0.50
     Rise(in): 24.00          24.00                           Exit Loss Coef: 0.10
   Invert(ft): -1.600         -1.700                          Bend Loss Coef: 0.70
```

```
  Manning's N: 0.012000       0.012000                    Outlet Ctrl Spec: Use dc or tw
 Top Clip(in): 0.000          0.000                        Inlet Ctrl Spec: Use dc
 Bot Clip(in): 0.000          0.000                      Stabilizer Option: None


Upstream FHWA Inlet Edge Description:
Circular Concrete: Square edge w/ headwall

Downstream FHWA Inlet Edge Description:
Circular Concrete: Square edge w/ headwall


-----------------------------------------------------------------------------------------------
         Name: S4-P14              From Node: DW-07A             Length(ft): 4.00
        Group: system-4              To Node: CDS-10                  Count: 1
                                                             Friction Equation: Average Conveyance
              UPSTREAM       DOWNSTREAM                    Solution Algorithm: Most Restrictive
     Geometry: Circular       Circular                                  Flow: Both
     Span(in): 18.00          18.00                         Entrance Loss Coef: 0.50
     Rise(in): 18.00          18.00                             Exit Loss Coef: 0.10
   Invert(ft): -0.900         -0.960                            Bend Loss Coef: 0.70
  Manning's N: 0.012000       0.012000                        Outlet Ctrl Spec: Use dc or tw
 Top Clip(in): 0.000          0.000                            Inlet Ctrl Spec: Use dc
 Bot Clip(in): 0.000          0.000                          Stabilizer Option: None


Upstream FHWA Inlet Edge Description:
Circular Concrete: Square edge w/ headwall

Downstream FHWA Inlet Edge Description:
Circular Concrete: Square edge w/ headwall


-----------------------------------------------------------------------------------------------
         Name: S4-P15              From Node: DW-08A             Length(ft): 4.00
        Group: system-4              To Node: CDS-11                  Count: 1
                                                             Friction Equation: Average Conveyance
              UPSTREAM       DOWNSTREAM                    Solution Algorithm: Most Restrictive
     Geometry: Circular       Circular                                  Flow: Both
     Span(in): 18.00          18.00                         Entrance Loss Coef: 0.50
     Rise(in): 18.00          18.00                             Exit Loss Coef: 0.10
   Invert(ft): -0.900         -0.960                            Bend Loss Coef: 0.70
  Manning's N: 0.012000       0.012000                        Outlet Ctrl Spec: Use dc or tw
 Top Clip(in): 0.000          0.000                            Inlet Ctrl Spec: Use dc
 Bot Clip(in): 0.000          0.000                          Stabilizer Option: None


Upstream FHWA Inlet Edge Description:
Circular Concrete: Square edge w/ headwall

Downstream FHWA Inlet Edge Description:
Circular Concrete: Square edge w/ headwall


-----------------------------------------------------------------------------------------------
         Name: S4-P2               From Node: S-19               Length(ft): 127.00
        Group: system-4              To Node: S-21                    Count: 1
                                                             Friction Equation: Average Conveyance
              UPSTREAM       DOWNSTREAM                    Solution Algorithm: Most Restrictive
     Geometry: Circular       Circular                                  Flow: Both
     Span(in): 18.00          18.00                         Entrance Loss Coef: 0.50
     Rise(in): 18.00          18.00                             Exit Loss Coef: 0.10
   Invert(ft): -3.600         -4.100                            Bend Loss Coef: 0.70
  Manning's N: 0.012000       0.012000                        Outlet Ctrl Spec: Use dc or tw
```

```
 Top Clip(in): 0.000          0.000                        Inlet Ctrl Spec: Use dn
 Bot Clip(in): 0.000          0.000                      Stabilizer Option: None


Upstream FHWA Inlet Edge Description:
Circular Concrete: Square edge w/ headwall

Downstream FHWA Inlet Edge Description:
Circular Concrete: Square edge w/ headwall


-----------------------------------------------------------------------------------------------
         Name: S4-P3               From Node: S-22               Length(ft): 50.00
        Group: system-4              To Node: S-21                    Count: 1
                                                              Friction Equation: Average Conveyance
              UPSTREAM       DOWNSTREAM                     Solution Algorithm: Most Restrictive
     Geometry: Circular       Circular                                  Flow: Both
     Span(in): 18.00          18.00                          Entrance Loss Coef: 0.50
     Rise(in): 18.00          18.00                              Exit Loss Coef: 0.10
   Invert(ft): -4.000         -4.100                             Bend Loss Coef: 0.00
  Manning's N: 0.012000       0.012000                         Outlet Ctrl Spec: Use dc or tw
 Top Clip(in): 0.000          0.000                              Inlet Ctrl Spec: Use dn
 Bot Clip(in): 0.000          0.000                            Stabilizer Option: None


Upstream FHWA Inlet Edge Description:
Circular Concrete: Square edge w/ headwall

Downstream FHWA Inlet Edge Description:
Circular Concrete: Square edge w/ headwall


-----------------------------------------------------------------------------------------------
         Name: S4-P4               From Node: S-23               Length(ft): 137.00
        Group: system-4              To Node: S-21                    Count: 1
                                                              Friction Equation: Average Conveyance
              UPSTREAM       DOWNSTREAM                     Solution Algorithm: Most Restrictive
     Geometry: Circular       Circular                                  Flow: Both
     Span(in): 18.00          18.00                          Entrance Loss Coef: 0.50
     Rise(in): 18.00          18.00                              Exit Loss Coef: 0.10
   Invert(ft): -2.300         -2.000                             Bend Loss Coef: 0.70
  Manning's N: 0.012000       0.012000                         Outlet Ctrl Spec: Use dc or tw
 Top Clip(in): 0.000          0.000                              Inlet Ctrl Spec: Use dn
 Bot Clip(in): 0.000          0.000                            Stabilizer Option: None


Upstream FHWA Inlet Edge Description:
Circular Concrete: Square edge w/ headwall

Downstream FHWA Inlet Edge Description:
Circular Concrete: Square edge w/ headwall


-----------------------------------------------------------------------------------------------
         Name: S4-P5               From Node: S-21               Length(ft): 4.00
        Group: system-4              To Node: DW-06A                  Count: 1
                                                              Friction Equation: Average Conveyance
              UPSTREAM       DOWNSTREAM                     Solution Algorithm: Most Restrictive
     Geometry: Circular       Circular                                  Flow: Both
     Span(in): 24.00          24.00                          Entrance Loss Coef: 0.50
     Rise(in): 24.00          24.00                              Exit Loss Coef: 0.10
   Invert(ft): -4.100         -4.200                             Bend Loss Coef: 0.70
  Manning's N: 0.012000       0.012000                         Outlet Ctrl Spec: Use dc or tw
 Top Clip(in): 0.000          0.000                              Inlet Ctrl Spec: Use dc
```

```
 Bot Clip(in): 0.000          0.000                       Stabilizer Option: None


Upstream FHWA Inlet Edge Description:
Circular Concrete: Square edge w/ headwall

Downstream FHWA Inlet Edge Description:
Circular Concrete: Square edge w/ headwall


-----------------------------------------------------------------------------------------------
         Name: S4-P6               From Node: S-23               Length(ft): 4.00
        Group: system-4              To Node: CDS-09                  Count: 1
                                                            Friction Equation: Average Conveyance
               UPSTREAM       DOWNSTREAM                   Solution Algorithm: Most Restrictive
     Geometry: Circular       Circular                                  Flow: Both
     Span(in): 18.00          18.00                        Entrance Loss Coef: 0.50
     Rise(in): 18.00          18.00                            Exit Loss Coef: 0.10
   Invert(ft): -2.000         -2.100                           Bend Loss Coef: 0.70
  Manning's N: 0.012000       0.012000                       Outlet Ctrl Spec: Use dc or tw
 Top Clip(in): 0.000          0.000                           Inlet Ctrl Spec: Use dn
 Bot Clip(in): 0.000          0.000                         Stabilizer Option: None


Upstream FHWA Inlet Edge Description:
Circular Concrete: Square edge w/ headwall

Downstream FHWA Inlet Edge Description:
Circular Concrete: Square edge w/ headwall


-----------------------------------------------------------------------------------------------
         Name: S4-P7               From Node: S-24               Length(ft): 227.00
        Group: system-4              To Node: S-23                    Count: 1
                                                            Friction Equation: Average Conveyance
               UPSTREAM       DOWNSTREAM                   Solution Algorithm: Most Restrictive
     Geometry: Circular       Circular                                  Flow: Both
     Span(in): 18.00          18.00                        Entrance Loss Coef: 0.50
     Rise(in): 18.00          18.00                            Exit Loss Coef: 0.10
   Invert(ft): -1.600         -2.000                           Bend Loss Coef: 0.70
  Manning's N: 0.012000       0.012000                       Outlet Ctrl Spec: Use dc or tw
 Top Clip(in): 0.000          0.000                           Inlet Ctrl Spec: Use dn
 Bot Clip(in): 0.000          0.000                         Stabilizer Option: None


Upstream FHWA Inlet Edge Description:
Circular Concrete: Square edge w/ headwall

Downstream FHWA Inlet Edge Description:
Circular Concrete: Square edge w/ headwall


-----------------------------------------------------------------------------------------------
         Name: S4-P8               From Node: S-24               Length(ft): 125.00
        Group: system-4              To Node: S-25                    Count: 1
                                                            Friction Equation: Average Conveyance
               UPSTREAM       DOWNSTREAM                   Solution Algorithm: Most Restrictive
     Geometry: Circular       Circular                                  Flow: Both
     Span(in): 18.00          18.00                        Entrance Loss Coef: 0.50
     Rise(in): 18.00          18.00                            Exit Loss Coef: 0.10
   Invert(ft): -1.600         -2.000                           Bend Loss Coef: 0.70
  Manning's N: 0.012000       0.012000                       Outlet Ctrl Spec: Use dc or tw
 Top Clip(in): 0.000          0.000                           Inlet Ctrl Spec: Use dn
 Bot Clip(in): 0.000          0.000                         Stabilizer Option: None
```

Upstream FHWA Inlet Edge Description:
Circular Concrete: Square edge w/ headwall

Downstream FHWA Inlet Edge Description:
Circular Concrete: Square edge w/ headwall

Name:	S4-P9	From Node: S-26	Length(ft):	50.00
Group:	system-4	To Node: S-25	Count:	1
			Friction Equation:	Average Conveyance
	UPSTREAM	DOWNSTREAM	Solution Algorithm:	Most Restrictive
Geometry:	Circular	Circular	Flow:	Both
Span(in):	18.00	18.00	Entrance Loss Coef:	0.50
Rise(in):	18.00	18.00	Exit Loss Coef:	0.10
Invert(ft):	-3.700	-3.800	Bend Loss Coef:	0.00
Manning's N:	0.012000	0.012000	Outlet Ctrl Spec:	Use dc or tw
Top Clip(in):	0.000	0.000	Inlet Ctrl Spec:	Use dn
Bot Clip(in):	0.000	0.000	Stabilizer Option:	None

Upstream FHWA Inlet Edge Description:
Circular Concrete: Square edge w/ headwall

Downstream FHWA Inlet Edge Description:
Circular Concrete: Square edge w/ headwall

Name:	S5-P1	From Node: S-28	Length(ft):	127.00
Group:	system-5	To Node: S-29	Count:	1
			Friction Equation:	Average Conveyance
	UPSTREAM	DOWNSTREAM	Solution Algorithm:	Most Restrictive
Geometry:	Circular	Circular	Flow:	Both
Span(in):	18.00	18.00	Entrance Loss Coef:	0.50
Rise(in):	18.00	18.00	Exit Loss Coef:	0.10
Invert(ft):	-1.600	-2.000	Bend Loss Coef:	0.70
Manning's N:	0.012000	0.012000	Outlet Ctrl Spec:	Use dc or tw
Top Clip(in):	0.000	0.000	Inlet Ctrl Spec:	Use dn
Bot Clip(in):	0.000	0.000	Stabilizer Option:	None

Upstream FHWA Inlet Edge Description:
Circular Concrete: Square edge w/ headwall

Downstream FHWA Inlet Edge Description:
Circular Concrete: Square edge w/ headwall

Name:	S5-P2	From Node: S-30	Length(ft):	50.00
Group:	system-5	To Node: S-29	Count:	1
			Friction Equation:	Average Conveyance
	UPSTREAM	DOWNSTREAM	Solution Algorithm:	Most Restrictive
Geometry:	Circular	Circular	Flow:	Both
Span(in):	18.00	18.00	Entrance Loss Coef:	0.50
Rise(in):	18.00	18.00	Exit Loss Coef:	0.10
Invert(ft):	-1.900	-2.000	Bend Loss Coef:	0.00
Manning's N:	0.012000	0.012000	Outlet Ctrl Spec:	Use dc or tw
Top Clip(in):	0.000	0.000	Inlet Ctrl Spec:	Use dn
Bot Clip(in):	0.000	0.000	Stabilizer Option:	None

Upstream FHWA Inlet Edge Description:
Circular Concrete: Square edge w/ headwall

Downstream FHWA Inlet Edge Description:
Circular Concrete: Square edge w/ headwall

Name:	S5-P3	From Node: S-31	Length(ft):	117.00
Group:	system-5	To Node: S-29	Count:	1
			Friction Equation:	Average Conveyance
	UPSTREAM	DOWNSTREAM	Solution Algorithm:	Most Restrictive
Geometry:	Circular	Circular	Flow:	Both
Span(in):	18.00	18.00	Entrance Loss Coef:	0.50
Rise(in):	18.00	18.00	Exit Loss Coef:	0.10
Invert(ft):	-1.700	-2.000	Bend Loss Coef:	0.70
Manning's N:	0.012000	0.012000	Outlet Ctrl Spec:	Use dc or tw
Top Clip(in):	0.000	0.000	Inlet Ctrl Spec:	Use dn
Bot Clip(in):	0.000	0.000	Stabilizer Option:	None

Upstream FHWA Inlet Edge Description:
Circular Concrete: Square edge w/ headwall

Downstream FHWA Inlet Edge Description:
Circular Concrete: Square edge w/ headwall

Name:	S5-P4	From Node: S-28	Length(ft):	4.00
Group:	system-5	To Node: CDS-12	Count:	1
			Friction Equation:	Average Conveyance
	UPSTREAM	DOWNSTREAM	Solution Algorithm:	Most Restrictive
Geometry:	Circular	Circular	Flow:	Both
Span(in):	18.00	18.00	Entrance Loss Coef:	0.50
Rise(in):	18.00	18.00	Exit Loss Coef:	0.10
Invert(ft):	-1.600	-1.700	Bend Loss Coef:	0.70
Manning's N:	0.012000	0.012000	Outlet Ctrl Spec:	Use dc or tw
Top Clip(in):	0.000	0.000	Inlet Ctrl Spec:	Use dc
Bot Clip(in):	0.000	0.000	Stabilizer Option:	None

Upstream FHWA Inlet Edge Description:
Circular Concrete: Square edge w/ headwall

Downstream FHWA Inlet Edge Description:
Circular Concrete: Square edge w/ headwall

Name:	S5-P5	From Node: S-29	Length(ft):	4.00
Group:	system-5	To Node: DW-09A	Count:	1
			Friction Equation:	Average Conveyance
	UPSTREAM	DOWNSTREAM	Solution Algorithm:	Most Restrictive
Geometry:	Circular	Circular	Flow:	Both
Span(in):	24.00	24.00	Entrance Loss Coef:	0.50
Rise(in):	24.00	24.00	Exit Loss Coef:	0.10
Invert(ft):	-2.500	-2.600	Bend Loss Coef:	0.00
Manning's N:	0.012000	0.012000	Outlet Ctrl Spec:	Use dc or tw
Top Clip(in):	0.000	0.000	Inlet Ctrl Spec:	Use dn
Bot Clip(in):	0.000	0.000	Stabilizer Option:	None

Upstream FHWA Inlet Edge Description:
Circular Concrete: Square edge w/ headwall

Downstream FHWA Inlet Edge Description:
Circular Concrete: Square edge w/ headwall

```
         Name: S5-P6              From Node: DW-09A            Length(ft): 4.00
        Group: system-5             To Node: CDS-13                 Count: 1
                                                          Friction Equation: Average Conveyance
              UPSTREAM       DOWNSTREAM                  Solution Algorithm: Most Restrictive
     Geometry: Circular       Circular                               Flow: Both
     Span(in): 18.00          18.00                       Entrance Loss Coef: 0.50
     Rise(in): 18.00          18.00                           Exit Loss Coef: 0.10
   Invert(ft): -0.900         -0.960                          Bend Loss Coef: 0.70
  Manning's N: 0.012000       0.012000                      Outlet Ctrl Spec: Use dc or tw
 Top Clip(in): 0.000          0.000                          Inlet Ctrl Spec: Use dc
 Bot Clip(in): 0.000          0.000                         Stabilizer Option: None
```

Upstream FHWA Inlet Edge Description:
Circular Concrete: Square edge w/ headwall

Downstream FHWA Inlet Edge Description:
Circular Concrete: Square edge w/ headwall

```
         Name: S6-P1              From Node: S-32              Length(ft): 148.00
        Group: system-6             To Node: S-33                   Count: 1
                                                          Friction Equation: Average Conveyance
              UPSTREAM       DOWNSTREAM                  Solution Algorithm: Most Restrictive
     Geometry: Circular       Circular                               Flow: Both
     Span(in): 18.00          18.00                       Entrance Loss Coef: 0.50
     Rise(in): 18.00          18.00                           Exit Loss Coef: 0.10
   Invert(ft): -1.700         -2.500                          Bend Loss Coef: 0.70
  Manning's N: 0.012000       0.012000                      Outlet Ctrl Spec: Use dc or tw
 Top Clip(in): 0.000          0.000                          Inlet Ctrl Spec: Use dn
 Bot Clip(in): 0.000          0.000                         Stabilizer Option: None
```

Upstream FHWA Inlet Edge Description:
Circular Concrete: Square edge w/ headwall

Downstream FHWA Inlet Edge Description:
Circular Concrete: Square edge w/ headwall

```
         Name: S6-P2              From Node: S-34              Length(ft): 48.00
        Group: system-6             To Node: S-33                   Count: 1
                                                          Friction Equation: Average Conveyance
              UPSTREAM       DOWNSTREAM                  Solution Algorithm: Most Restrictive
     Geometry: Circular       Circular                               Flow: Both
     Span(in): 18.00          18.00                       Entrance Loss Coef: 0.50
     Rise(in): 18.00          18.00                           Exit Loss Coef: 0.10
   Invert(ft): -2.000         -2.500                          Bend Loss Coef: 0.00
  Manning's N: 0.012000       0.012000                      Outlet Ctrl Spec: Use dc or tw
 Top Clip(in): 0.000          0.000                          Inlet Ctrl Spec: Use dn
 Bot Clip(in): 0.000          0.000                         Stabilizer Option: None
```

Upstream FHWA Inlet Edge Description:
Circular Concrete: Square edge w/ headwall

Downstream FHWA Inlet Edge Description:
Circular Concrete: Square edge w/ headwall

```
         Name: S6-P3               From Node: S-35               Length(ft): 94.00
        Group: system-6              To Node: S-33                    Count: 1
                                                          Friction Equation: Average Conveyance
              UPSTREAM       DOWNSTREAM                  Solution Algorithm: Most Restrictive
     Geometry: Circular       Circular                                 Flow: Both
     Span(in): 18.00          18.00                      Entrance Loss Coef: 0.50
     Rise(in): 18.00          18.00                          Exit Loss Coef: 0.10
   Invert(ft): -1.900         -2.500                         Bend Loss Coef: 0.70
  Manning's N: 0.012000       0.012000                     Outlet Ctrl Spec: Use dc or tw
 Top Clip(in): 0.000          0.000                          Inlet Ctrl Spec: Use dn
 Bot Clip(in): 0.000          0.000                       Stabilizer Option: None
```

Upstream FHWA Inlet Edge Description:
Circular Concrete: Square edge w/ headwall

Downstream FHWA Inlet Edge Description:
Circular Concrete: Square edge w/ headwall

```
         Name: S6-P4               From Node: S-33               Length(ft): 4.00
        Group: system-6              To Node: DW-10A                  Count: 1
                                                          Friction Equation: Average Conveyance
              UPSTREAM       DOWNSTREAM                  Solution Algorithm: Most Restrictive
     Geometry: Circular       Circular                                 Flow: Both
     Span(in): 24.00          24.00                      Entrance Loss Coef: 0.50
     Rise(in): 24.00          24.00                          Exit Loss Coef: 0.10
   Invert(ft): -2.700         -2.800                         Bend Loss Coef: 0.70
  Manning's N: 0.012000       0.012000                     Outlet Ctrl Spec: Use dc or tw
 Top Clip(in): 0.000          0.000                          Inlet Ctrl Spec: Use dn
 Bot Clip(in): 0.000          0.000                       Stabilizer Option: None
```

Upstream FHWA Inlet Edge Description:
Circular Concrete: Square edge w/ headwall

Downstream FHWA Inlet Edge Description:
Circular Concrete: Square edge w/ headwall

```
         Name: S6-P5               From Node: S-35               Length(ft): 4.00
        Group: system-6              To Node: DW-11A                  Count: 1
                                                          Friction Equation: Average Conveyance
              UPSTREAM       DOWNSTREAM                  Solution Algorithm: Most Restrictive
     Geometry: Circular       Circular                                 Flow: Both
     Span(in): 18.00          18.00                      Entrance Loss Coef: 0.50
     Rise(in): 18.00          18.00                          Exit Loss Coef: 0.10
   Invert(ft): -0.900         -0.960                         Bend Loss Coef: 0.70
  Manning's N: 0.012000       0.012000                     Outlet Ctrl Spec: Use dc or tw
 Top Clip(in): 0.000          0.000                          Inlet Ctrl Spec: Use dc
 Bot Clip(in): 0.000          0.000                       Stabilizer Option: None
```

Upstream FHWA Inlet Edge Description:

Circular Concrete: Square edge w/ headwall

Downstream FHWA Inlet Edge Description:
Circular Concrete: Square edge w/ headwall

```
         Name: S6-P6              From Node: DW-11A            Length(ft): 4.00
        Group: system-6             To Node: CDS-15                 Count: 1
                                                          Friction Equation: Average Conveyance
              UPSTREAM       DOWNSTREAM                  Solution Algorithm: Most Restrictive
     Geometry: Circular       Circular                               Flow: Both
     Span(in): 18.00          18.00                       Entrance Loss Coef: 0.50
     Rise(in): 18.00          18.00                           Exit Loss Coef: 0.10
   Invert(ft): -0.900         -0.960                          Bend Loss Coef: 0.70
  Manning's N: 0.012000       0.012000                      Outlet Ctrl Spec: Use dc or tw
 Top Clip(in): 0.000          0.000                           Inlet Ctrl Spec: Use dc
 Bot Clip(in): 0.000          0.000                         Stabilizer Option: None
```

Upstream FHWA Inlet Edge Description:
Circular Concrete: Square edge w/ headwall

Downstream FHWA Inlet Edge Description:
Circular Concrete: Square edge w/ headwall

```
         Name: S6-P7              From Node: DW-10A            Length(ft): 4.00
        Group: system-6             To Node: CDS-14                 Count: 1
                                                          Friction Equation: Automatic
              UPSTREAM       DOWNSTREAM                  Solution Algorithm: Most Restrictive
     Geometry: Circular       Circular                               Flow: Both
     Span(in): 18.00          18.00                       Entrance Loss Coef: 0.50
     Rise(in): 18.00          18.00                           Exit Loss Coef: 0.50
   Invert(ft): -0.900         -0.960                          Bend Loss Coef: 0.00
  Manning's N: 0.012000       0.012000                      Outlet Ctrl Spec: Use dc or tw
 Top Clip(in): 0.000          0.000                           Inlet Ctrl Spec: Use dc
 Bot Clip(in): 0.000          0.000                         Stabilizer Option: None
```

Upstream FHWA Inlet Edge Description:
Circular Concrete: Square edge w/ headwall

Downstream FHWA Inlet Edge Description:
Circular Concrete: Square edge w/ headwall

```
         Name: S6-P8              From Node: CDS-14            Length(ft): 24.00
        Group: system-6             To Node: EW-05                  Count: 1
                                                          Friction Equation: Average Conveyance
              UPSTREAM       DOWNSTREAM                  Solution Algorithm: Most Restrictive
     Geometry: Circular       Circular                               Flow: Both
     Span(in): 18.00          18.00                       Entrance Loss Coef: 0.50
     Rise(in): 18.00          18.00                           Exit Loss Coef: 0.10
   Invert(ft): -1.550         -1.700                          Bend Loss Coef: 0.70
  Manning's N: 0.012000       0.012000                      Outlet Ctrl Spec: Use dc or tw
 Top Clip(in): 0.000          0.000                           Inlet Ctrl Spec: Use dn
 Bot Clip(in): 0.000          0.000                         Stabilizer Option: None
```

Upstream FHWA Inlet Edge Description:
Circular Concrete: Square edge w/ headwall

Downstream FHWA Inlet Edge Description:
Circular Concrete: Square edge w/ headwall

```
-----------------------------------------------------------------------------------------------
         Name: S7-P1              From Node: S-37              Length(ft): 127.00
        Group: system-7             To Node: S-36                   Count: 1
                                                          Friction Equation: Average Conveyance
              UPSTREAM       DOWNSTREAM                  Solution Algorithm: Most Restrictive
     Geometry: Circular       Circular                               Flow: Both
     Span(in): 18.00          18.00                       Entrance Loss Coef: 0.50
     Rise(in): 18.00          18.00                           Exit Loss Coef: 0.10
   Invert(ft): -1.850         -2.000                          Bend Loss Coef: 0.70
  Manning's N: 0.012000       0.012000                      Outlet Ctrl Spec: Use dc or tw
 Top Clip(in): 0.000          0.000                           Inlet Ctrl Spec: Use dn
 Bot Clip(in): 0.000          0.000                         Stabilizer Option: None
```

Upstream FHWA Inlet Edge Description:
Circular Concrete: Square edge w/ headwall

Downstream FHWA Inlet Edge Description:
Circular Concrete: Square edge w/ headwall

```
-----------------------------------------------------------------------------------------------
         Name: S7-P2              From Node: S-38              Length(ft): 47.00
        Group: system-7             To Node: S-37                   Count: 1
                                                          Friction Equation: Average Conveyance
              UPSTREAM       DOWNSTREAM                  Solution Algorithm: Most Restrictive
     Geometry: Circular       Circular                               Flow: Both
     Span(in): 18.00          18.00                       Entrance Loss Coef: 0.50
     Rise(in): 18.00          18.00                           Exit Loss Coef: 0.10
   Invert(ft): -1.750         -1.850                          Bend Loss Coef: 0.00
  Manning's N: 0.012000       0.012000                      Outlet Ctrl Spec: Use dc or tw
 Top Clip(in): 0.000          0.000                           Inlet Ctrl Spec: Use dn
 Bot Clip(in): 0.000          0.000                         Stabilizer Option: None
```

Upstream FHWA Inlet Edge Description:
Circular Concrete: Square edge w/ headwall

Downstream FHWA Inlet Edge Description:
Circular Concrete: Square edge w/ headwall

```
-----------------------------------------------------------------------------------------------
         Name: S7-P3              From Node: S-36              Length(ft): 4.00
        Group: system-7             To Node: DW-12A                 Count: 1
                                                          Friction Equation: Average Conveyance
              UPSTREAM       DOWNSTREAM                  Solution Algorithm: Most Restrictive
     Geometry: Circular       Circular                               Flow: Both
     Span(in): 24.00          24.00                       Entrance Loss Coef: 0.50
     Rise(in): 24.00          24.00                           Exit Loss Coef: 0.10
   Invert(ft): -2.350         -2.800                          Bend Loss Coef: 0.70
  Manning's N: 0.012000       0.012000                      Outlet Ctrl Spec: Use dc or tw
 Top Clip(in): 0.000          0.000                           Inlet Ctrl Spec: Use dc
 Bot Clip(in): 0.000          0.000                         Stabilizer Option: None
```

Upstream FHWA Inlet Edge Description:
Circular Concrete: Square edge w/ headwall

Downstream FHWA Inlet Edge Description:
Circular Concrete: Square edge w/ headwall

```
-----------------------------------------------------------------------------------------------
         Name: S7-P4              From Node: DW-12A            Length(ft): 4.00
        Group: system-7             To Node: CDS-16                 Count: 1
                                                          Friction Equation: Automatic
              UPSTREAM       DOWNSTREAM                  Solution Algorithm: Most Restrictive
     Geometry: Circular       Circular                               Flow: Both
     Span(in): 18.00          18.00                       Entrance Loss Coef: 0.50
     Rise(in): 18.00          18.00                           Exit Loss Coef: 0.50
   Invert(ft): -0.900         -0.960                          Bend Loss Coef: 0.00
  Manning's N: 0.012000       0.012000                      Outlet Ctrl Spec: Use dc or tw
 Top Clip(in): 0.000          0.000                          Inlet Ctrl Spec: Use dc
 Bot Clip(in): 0.000          0.000                         Stabilizer Option: None
```

Upstream FHWA Inlet Edge Description:
Circular Concrete: Square edge w/ headwall

Downstream FHWA Inlet Edge Description:
Circular Concrete: Square edge w/ headwall

```
==========================================================================================
==== Drop Structures ======================================================================
==========================================================================================

         Name: DS-01              From Node: CDS-01            Length(ft): 6.00
        Group: BASE                 To Node: DW-01B                 Count: 1

              UPSTREAM       DOWNSTREAM                   Friction Equation: Average Conveyance
     Geometry: Circular       Circular                    Solution Algorithm: Most Restrictive
     Span(in): 18.00          18.00                                  Flow: Both
     Rise(in): 18.00          18.00                       Entrance Loss Coef: 0.500
   Invert(ft): -0.960         -1.000                          Exit Loss Coef: 0.500
  Manning's N: 0.012000       0.012000                      Outlet Ctrl Spec: Use dc or tw
 Top Clip(in): 0.000          0.000                          Inlet Ctrl Spec: Use dc
 Bot Clip(in): 0.000          0.000                            Solution Incs: 10
```

Upstream FHWA Inlet Edge Description:
Circular Concrete: Square edge w/ headwall

Downstream FHWA Inlet Edge Description:
Circular Concrete: Square edge w/ headwall

```
*** Weir 1 of 1 for Drop Structure DS-01 ***
                                                                                  TABLE
                  Count: 1                       Bottom Clip(in): 0.000
                   Type: Vertical: Fread            Top Clip(in): 0.000
                   Flow: Both                     Weir Disc Coef: 3.200
              Geometry: Rectangular            Orifice Disc Coef: 0.600

              Span(in): 48.00                        Invert(ft): 0.710
              Rise(in): 35.00                  Control Elev(ft): 0.710

-----------------------------------------------------------------------------------------------
         Name: DS-02              From Node: CDS-02            Length(ft): 23.00
        Group: system-1             To Node: EW-01                  Count: 1

              UPSTREAM       DOWNSTREAM                   Friction Equation: Average Conveyance
     Geometry: Circular       Circular                    Solution Algorithm: Most Restrictive
     Span(in): 18.00          18.00                                  Flow: Both
```

```
     Rise(in): 18.00          18.00                      Entrance Loss Coef: 0.500
   Invert(ft): -1.450         -1.920                         Exit Loss Coef: 0.500
  Manning's N: 0.012000       0.012000                     Outlet Ctrl Spec: Use dc or tw
 Top Clip(in): 0.000          0.000                         Inlet Ctrl Spec: Use dc
 Bot Clip(in): 0.000          0.000                           Solution Incs: 10

Upstream FHWA Inlet Edge Description:
Circular Concrete: Square edge w/ headwall

Downstream FHWA Inlet Edge Description:
Circular Concrete: Square edge w/ headwall



*** Weir 1 of 1 for Drop Structure DS-02 ***
                                                                                    TABLE
                  Count: 1                       Bottom Clip(in): 0.000
                   Type: Vertical: Fread            Top Clip(in): 0.000
                   Flow: Both                     Weir Disc Coef: 3.200
               Geometry: Rectangular            Orifice Disc Coef: 0.600

               Span(in): 48.00                        Invert(ft): 0.220
               Rise(in): 35.00                  Control Elev(ft): 0.220


-----------------------------------------------------------------------------------------------
         Name: DS-03               From Node: CDS-03             Length(ft): 6.00
        Group: system-2              To Node: DW-02B                  Count: 1

              UPSTREAM       DOWNSTREAM                  Friction Equation: Average Conveyance
     Geometry: Circular       Circular                   Solution Algorithm: Most Restrictive
     Span(in): 18.00          18.00                                 Flow: Both
     Rise(in): 18.00          18.00                      Entrance Loss Coef: 0.500
   Invert(ft): -0.960         -1.000                         Exit Loss Coef: 0.500
  Manning's N: 0.012000       0.012000                     Outlet Ctrl Spec: Use dc or tw
 Top Clip(in): 0.000          0.000                         Inlet Ctrl Spec: Use dc
 Bot Clip(in): 0.000          0.000                           Solution Incs: 10

Upstream FHWA Inlet Edge Description:
Circular Concrete: Square edge w/ headwall

Downstream FHWA Inlet Edge Description:
Circular Concrete: Square edge w/ headwall



*** Weir 1 of 1 for Drop Structure DS-03 ***
                                                                                    TABLE
                  Count: 1                       Bottom Clip(in): 0.000
                   Type: Vertical: Fread            Top Clip(in): 0.000
                   Flow: Both                     Weir Disc Coef: 3.200
               Geometry: Rectangular            Orifice Disc Coef: 0.600

               Span(in): 48.00                        Invert(ft): 0.710
               Rise(in): 35.00                  Control Elev(ft): 0.710


-----------------------------------------------------------------------------------------------
         Name: DS-04               From Node: CDS-04             Length(ft): 6.00
        Group: system-2              To Node: DW-03B                  Count: 1

              UPSTREAM       DOWNSTREAM                  Friction Equation: Average Conveyance
     Geometry: Circular       Circular                   Solution Algorithm: Most Restrictive
     Span(in): 18.00          18.00                                 Flow: Both
     Rise(in): 18.00          18.00                      Entrance Loss Coef: 0.500
   Invert(ft): -0.960         -1.000                         Exit Loss Coef: 0.500
  Manning's N: 0.012000       0.012000                     Outlet Ctrl Spec: Use dc or tw
 Top Clip(in): 0.000          0.000                         Inlet Ctrl Spec: Use dc
 Bot Clip(in): 0.000          0.000                           Solution Incs: 10
```

```
Upstream FHWA Inlet Edge Description:
Circular Concrete: Square edge w/ headwall

Downstream FHWA Inlet Edge Description:
Circular Concrete: Square edge w/ headwall



*** Weir 1 of 1 for Drop Structure DS-04 ***
                                                                                TABLE
                 Count: 1                      Bottom Clip(in): 0.000
                  Type: Vertical: Fread           Top Clip(in): 0.000
                  Flow: Both                    Weir Disc Coef: 3.200
              Geometry: Rectangular           Orifice Disc Coef: 0.600

              Span(in): 48.00                       Invert(ft): 0.710
              Rise(in): 35.00                  Control Elev(ft): 0.710


-----------------------------------------------------------------------------------------------
         Name: DS-05               From Node: CDS-05             Length(ft): 6.00
        Group: system-2              To Node: DW-04B                  Count: 1

              UPSTREAM       DOWNSTREAM                  Friction Equation: Average Conveyance
     Geometry: Circular       Circular                  Solution Algorithm: Most Restrictive
     Span(in): 18.00          18.00                                 Flow: Both
     Rise(in): 18.00          18.00                     Entrance Loss Coef: 0.500
   Invert(ft): -0.960         -1.000                        Exit Loss Coef: 0.500
  Manning's N: 0.012000       0.012000                    Outlet Ctrl Spec: Use dc or tw
 Top Clip(in): 0.000          0.000                        Inlet Ctrl Spec: Use dc
 Bot Clip(in): 0.000          0.000                          Solution Incs: 10

Upstream FHWA Inlet Edge Description:
Circular Concrete: Square edge w/ headwall

Downstream FHWA Inlet Edge Description:
Circular Concrete: Square edge w/ headwall



*** Weir 1 of 1 for Drop Structure DS-05 ***
                                                                                TABLE
                 Count: 1                      Bottom Clip(in): 0.000
                  Type: Vertical: Fread           Top Clip(in): 0.000
                  Flow: Both                    Weir Disc Coef: 3.200
              Geometry: Rectangular           Orifice Disc Coef: 0.600

              Span(in): 48.00                       Invert(ft): 0.710
              Rise(in): 35.00                  Control Elev(ft): 0.710


-----------------------------------------------------------------------------------------------
         Name: DS-06               From Node: CDS-06             Length(ft): 6.00
        Group: system-3              To Node: DW-05B                  Count: 1

              UPSTREAM       DOWNSTREAM                  Friction Equation: Average Conveyance
     Geometry: Circular       Circular                  Solution Algorithm: Most Restrictive
     Span(in): 18.00          18.00                                 Flow: Both
     Rise(in): 18.00          18.00                     Entrance Loss Coef: 0.500
   Invert(ft): -0.960         -1.000                        Exit Loss Coef: 0.500
  Manning's N: 0.012000       0.012000                    Outlet Ctrl Spec: Use dc or tw
 Top Clip(in): 0.000          0.000                        Inlet Ctrl Spec: Use dc
 Bot Clip(in): 0.000          0.000                          Solution Incs: 10

Upstream FHWA Inlet Edge Description:
Circular Concrete: Square edge w/ headwall

Downstream FHWA Inlet Edge Description:
Circular Concrete: Square edge w/ headwall
```

```
*** Weir 1 of 1 for Drop Structure DS-06 ***
                                                                                    TABLE
                  Count: 1                      Bottom Clip(in): 0.000
                   Type: Vertical: Fread           Top Clip(in): 0.000
                   Flow: Both                    Weir Disc Coef: 3.200
               Geometry: Rectangular           Orifice Disc Coef: 0.600

               Span(in): 48.00                       Invert(ft): 0.710
               Rise(in): 35.00                 Control Elev(ft): 0.710


-----------------------------------------------------------------------------------------------
         Name: DS-07               From Node: CDS-07             Length(ft): 105.00
        Group: system-3              To Node: EW-02                  Count: 1

               UPSTREAM       DOWNSTREAM                 Friction Equation: Average Conveyance
     Geometry: Circular       Circular                  Solution Algorithm: Most Restrictive
     Span(in): 18.00          18.00                                 Flow: Both
     Rise(in): 18.00          18.00                     Entrance Loss Coef: 0.500
   Invert(ft): -1.850         -2.000                        Exit Loss Coef: 0.500
  Manning's N: 0.012000       0.012000                    Outlet Ctrl Spec: Use dc or tw
 Top Clip(in): 0.000          0.000                        Inlet Ctrl Spec: Use dc
 Bot Clip(in): 0.000          0.000                          Solution Incs: 10

Upstream FHWA Inlet Edge Description:
Circular Concrete: Square edge w/ headwall

Downstream FHWA Inlet Edge Description:
Circular Concrete: Square edge w/ headwall


*** Weir 1 of 1 for Drop Structure DS-07 ***
                                                                                    TABLE
                  Count: 1                      Bottom Clip(in): 0.000
                   Type: Vertical: Fread           Top Clip(in): 0.000
                   Flow: Both                    Weir Disc Coef: 3.200
               Geometry: Rectangular           Orifice Disc Coef: 0.600

               Span(in): 48.00                       Invert(ft): -0.180
               Rise(in): 35.00                 Control Elev(ft): -0.180


-----------------------------------------------------------------------------------------------
         Name: DS-08               From Node: CDS-08             Length(ft): 6.00
        Group: system-4              To Node: DW-06B                 Count: 1

               UPSTREAM       DOWNSTREAM                 Friction Equation: Average Conveyance
     Geometry: Circular       Circular                  Solution Algorithm: Most Restrictive
     Span(in): 18.00          18.00                                 Flow: Both
     Rise(in): 18.00          18.00                     Entrance Loss Coef: 0.500
   Invert(ft): -0.960         -1.000                        Exit Loss Coef: 0.500
  Manning's N: 0.012000       0.012000                    Outlet Ctrl Spec: Use dc or tw
 Top Clip(in): 0.000          0.000                        Inlet Ctrl Spec: Use dc
 Bot Clip(in): 0.000          0.000                          Solution Incs: 10

Upstream FHWA Inlet Edge Description:
Circular Concrete: Square edge w/ headwall

Downstream FHWA Inlet Edge Description:
Circular Concrete: Square edge w/ headwall


*** Weir 1 of 1 for Drop Structure DS-08 ***
                                                                                    TABLE
                  Count: 1                      Bottom Clip(in): 0.000
                   Type: Vertical: Fread           Top Clip(in): 0.000
```

```
                  Flow: Both                    Weir Disc Coef: 3.200
              Geometry: Rectangular          Orifice Disc Coef: 0.600

              Span(in): 48.00                       Invert(ft): 0.710
              Rise(in): 35.00                  Control Elev(ft): 0.710


-------------------------------------------------------------------------------------------------
         Name: DS-09               From Node: CDS-09             Length(ft): 10.00
        Group: system-4              To Node: EW-03                  Count: 1

               UPSTREAM       DOWNSTREAM                 Friction Equation: Average Conveyance
     Geometry: Circular       Circular                  Solution Algorithm: Most Restrictive
     Span(in): 18.00          18.00                                  Flow: Both
     Rise(in): 18.00          18.00                     Entrance Loss Coef: 0.500
   Invert(ft): -2.100         -2.200                        Exit Loss Coef: 0.500
  Manning's N: 0.012000       0.012000                    Outlet Ctrl Spec: Use dc or tw
 Top Clip(in): 0.000          0.000                        Inlet Ctrl Spec: Use dc
 Bot Clip(in): 0.000          0.000                          Solution Incs: 10

Upstream FHWA Inlet Edge Description:
Circular Concrete: Square edge w/ headwall

Downstream FHWA Inlet Edge Description:
Circular Concrete: Square edge w/ headwall



*** Weir 1 of 1 for Drop Structure DS-09 ***
                                                                                        TABLE
                  Count: 1                      Bottom Clip(in): 0.000
                   Type: Vertical: Fread           Top Clip(in): 0.000
                  Flow: Both                    Weir Disc Coef: 3.200
              Geometry: Rectangular          Orifice Disc Coef: 0.600

              Span(in): 48.00                       Invert(ft): 0.120
              Rise(in): 35.00                  Control Elev(ft): 0.120


-------------------------------------------------------------------------------------------------
         Name: DS-10               From Node: CDS-10             Length(ft): 6.00
        Group: system-4              To Node: DW-07B                 Count: 1

               UPSTREAM       DOWNSTREAM                 Friction Equation: Average Conveyance
     Geometry: Circular       Circular                  Solution Algorithm: Most Restrictive
     Span(in): 18.00          18.00                                  Flow: Both
     Rise(in): 18.00          18.00                     Entrance Loss Coef: 0.500
   Invert(ft): -0.960         -1.000                        Exit Loss Coef: 0.500
  Manning's N: 0.012000       0.012000                    Outlet Ctrl Spec: Use dc or tw
 Top Clip(in): 0.000          0.000                        Inlet Ctrl Spec: Use dc
 Bot Clip(in): 0.000          0.000                          Solution Incs: 10

Upstream FHWA Inlet Edge Description:
Circular Concrete: Square edge w/ headwall

Downstream FHWA Inlet Edge Description:
Circular Concrete: Square edge w/ headwall



*** Weir 1 of 1 for Drop Structure DS-10 ***
                                                                                        TABLE
                  Count: 1                      Bottom Clip(in): 0.000
                   Type: Vertical: Fread           Top Clip(in): 0.000
                  Flow: Both                    Weir Disc Coef: 3.200
              Geometry: Rectangular          Orifice Disc Coef: 0.600

              Span(in): 48.00                       Invert(ft): 0.710
              Rise(in): 35.00                  Control Elev(ft): 0.710
```

```
-----------------------------------------------------------------------------------------------
         Name: DS-11              From Node: CDS-11            Length(ft): 6.00
        Group: system-4             To Node: DW-08B                 Count: 1

              UPSTREAM       DOWNSTREAM                 Friction Equation: Average Conveyance
     Geometry: Circular       Circular                 Solution Algorithm: Most Restrictive
     Span(in): 18.00          18.00                               Flow: Both
     Rise(in): 18.00          18.00                    Entrance Loss Coef: 0.500
   Invert(ft): -0.960         -1.000                       Exit Loss Coef: 0.500
  Manning's N: 0.012000       0.012000                   Outlet Ctrl Spec: Use dc or tw
 Top Clip(in): 0.000          0.000                       Inlet Ctrl Spec: Use dc
 Bot Clip(in): 0.000          0.000                         Solution Incs: 10

Upstream FHWA Inlet Edge Description:
Circular Concrete: Square edge w/ headwall

Downstream FHWA Inlet Edge Description:
Circular Concrete: Square edge w/ headwall



*** Weir 1 of 1 for Drop Structure DS-11 ***
                                                                                    TABLE
                 Count: 1                      Bottom Clip(in): 0.000
                  Type: Vertical: Fread           Top Clip(in): 0.000
                  Flow: Both                    Weir Disc Coef: 3.200
              Geometry: Rectangular           Orifice Disc Coef: 0.600

              Span(in): 48.00                       Invert(ft): 0.710
              Rise(in): 35.00                  Control Elev(ft): 0.710


-----------------------------------------------------------------------------------------------
         Name: DS-12              From Node: CDS-12            Length(ft): 36.00
        Group: system-5             To Node: EW-04                  Count: 1

              UPSTREAM       DOWNSTREAM                 Friction Equation: Average Conveyance
     Geometry: Circular       Circular                 Solution Algorithm: Most Restrictive
     Span(in): 18.00          18.00                               Flow: Both
     Rise(in): 18.00          18.00                    Entrance Loss Coef: 0.500
   Invert(ft): -1.700         -2.300                       Exit Loss Coef: 0.500
  Manning's N: 0.012000       0.012000                   Outlet Ctrl Spec: Use dc or tw
 Top Clip(in): 0.000          0.000                       Inlet Ctrl Spec: Use dc
 Bot Clip(in): 0.000          0.000                         Solution Incs: 10

Upstream FHWA Inlet Edge Description:
Circular Concrete: Square edge w/ headwall

Downstream FHWA Inlet Edge Description:
Circular Concrete: Square edge w/ headwall



*** Weir 1 of 1 for Drop Structure DS-12 ***
                                                                                    TABLE
                 Count: 1                      Bottom Clip(in): 0.000
                  Type: Vertical: Fread           Top Clip(in): 0.000
                  Flow: Both                    Weir Disc Coef: 3.200
              Geometry: Rectangular           Orifice Disc Coef: 0.600

              Span(in): 48.00                       Invert(ft): 0.220
              Rise(in): 35.00                  Control Elev(ft): 0.220


-----------------------------------------------------------------------------------------------
         Name: DS-13              From Node: CDS-13            Length(ft): 6.00
        Group: system-5             To Node: DW-09B                 Count: 1

              UPSTREAM       DOWNSTREAM                 Friction Equation: Average Conveyance
```

```
     Geometry: Circular       Circular                  Solution Algorithm: Most Restrictive
     Span(in): 18.00          18.00                                   Flow: Both
     Rise(in): 18.00          18.00                     Entrance Loss Coef: 0.500
   Invert(ft): -0.960         -1.000                        Exit Loss Coef: 0.500
  Manning's N: 0.012000       0.012000                    Outlet Ctrl Spec: Use dc or tw
 Top Clip(in): 0.000          0.000                        Inlet Ctrl Spec: Use dc
 Bot Clip(in): 0.000          0.000                          Solution Incs: 10

Upstream FHWA Inlet Edge Description:
Circular Concrete: Square edge w/ headwall

Downstream FHWA Inlet Edge Description:
Circular Concrete: Square edge w/ headwall



*** Weir 1 of 1 for Drop Structure DS-13 ***
                                                                                    TABLE
                  Count: 1                      Bottom Clip(in): 0.000
                   Type: Vertical: Fread           Top Clip(in): 0.000
                   Flow: Both                    Weir Disc Coef: 3.200
               Geometry: Rectangular           Orifice Disc Coef: 0.600

               Span(in): 48.00                       Invert(ft): 0.710
               Rise(in): 35.00                  Control Elev(ft): 0.710


-----------------------------------------------------------------------------------------------
         Name: DS-14               From Node: CDS-14             Length(ft): 6.00
        Group: system-6              To Node: DW-10B                  Count: 1

               UPSTREAM       DOWNSTREAM                 Friction Equation: Average Conveyance
     Geometry: Circular       Circular                  Solution Algorithm: Most Restrictive
     Span(in): 18.00          18.00                                   Flow: Both
     Rise(in): 18.00          18.00                     Entrance Loss Coef: 0.500
   Invert(ft): -0.960         -1.000                        Exit Loss Coef: 0.500
  Manning's N: 0.012000       0.012000                    Outlet Ctrl Spec: Use dc or tw
 Top Clip(in): 0.000          0.000                        Inlet Ctrl Spec: Use dc
 Bot Clip(in): 0.000          0.000                          Solution Incs: 10

Upstream FHWA Inlet Edge Description:
Circular Concrete: Square edge w/ headwall

Downstream FHWA Inlet Edge Description:
Circular Concrete: Square edge w/ headwall



*** Weir 1 of 1 for Drop Structure DS-14 ***
                                                                                    TABLE
                  Count: 1                      Bottom Clip(in): 0.000
                   Type: Vertical: Fread           Top Clip(in): 0.000
                   Flow: Both                    Weir Disc Coef: 3.200
               Geometry: Rectangular           Orifice Disc Coef: 0.600

               Span(in): 48.00                       Invert(ft): 0.710
               Rise(in): 35.00                  Control Elev(ft): 0.710


-----------------------------------------------------------------------------------------------
         Name: DS-15               From Node: CDS-15             Length(ft): 6.00
        Group: system-6              To Node: DW-11B                  Count: 1

               UPSTREAM       DOWNSTREAM                 Friction Equation: Average Conveyance
     Geometry: Circular       Circular                  Solution Algorithm: Most Restrictive
     Span(in): 18.00          18.00                                   Flow: Both
     Rise(in): 18.00          18.00                     Entrance Loss Coef: 0.500
   Invert(ft): -0.960         -1.000                        Exit Loss Coef: 0.500
  Manning's N: 0.012000       0.012000                    Outlet Ctrl Spec: Use dc or tw
 Top Clip(in): 0.000          0.000                        Inlet Ctrl Spec: Use dc
```

```
 Bot Clip(in): 0.000          0.000                          Solution Incs: 10

Upstream FHWA Inlet Edge Description:
Circular Concrete: Square edge w/ headwall

Downstream FHWA Inlet Edge Description:
Circular Concrete: Square edge w/ headwall



*** Weir 1 of 1 for Drop Structure DS-15 ***
                                                                                TABLE
                  Count: 1                       Bottom Clip(in): 0.000
                   Type: Vertical: Fread            Top Clip(in): 0.000
                   Flow: Both                     Weir Disc Coef: 3.200
               Geometry: Rectangular            Orifice Disc Coef: 0.600

               Span(in): 48.00                        Invert(ft): 0.710
               Rise(in): 35.00                  Control Elev(ft): 0.710


-----------------------------------------------------------------------------------------------
         Name: DS-16               From Node: CDS-16             Length(ft): 6.00
        Group: BASE                  To Node: DW-12B                  Count: 1

              UPSTREAM       DOWNSTREAM                  Friction Equation: Average Conveyance
     Geometry: Circular       Circular                  Solution Algorithm: Most Restrictive
     Span(in): 18.00          18.00                                 Flow: Both
     Rise(in): 18.00          18.00                     Entrance Loss Coef: 0.500
   Invert(ft): -0.960         -1.000                        Exit Loss Coef: 0.500
  Manning's N: 0.012000       0.012000                    Outlet Ctrl Spec: Use dc or tw
 Top Clip(in): 0.000          0.000                        Inlet Ctrl Spec: Use dc
 Bot Clip(in): 0.000          0.000                          Solution Incs: 10

Upstream FHWA Inlet Edge Description:
Circular Concrete: Square edge w/ headwall

Downstream FHWA Inlet Edge Description:
Circular Concrete: Square edge w/ headwall



*** Weir 1 of 1 for Drop Structure DS-16 ***
                                                                                TABLE
                  Count: 1                       Bottom Clip(in): 0.000
                   Type: Vertical: Fread            Top Clip(in): 0.000
                   Flow: Both                     Weir Disc Coef: 3.200
               Geometry: Rectangular            Orifice Disc Coef: 0.600

               Span(in): 48.00                        Invert(ft): 0.710
               Rise(in): 35.00                  Control Elev(ft): 0.710


===============================================================================================
==== Weirs ====================================================================================
===============================================================================================

         Name: W-01                From Node: DW-01A
        Group: system-1              To Node: DW-01B
         Flow: Both                    Count: 1
         Type: Vertical: Mavis      Geometry: Rectangular

                   Span(in): 44.00
                   Rise(in): 12.00
                 Invert(ft): 1.130
       Control Elevation(ft): 1.130
                                          TABLE
              Bottom Clip(in): 0.000
                 Top Clip(in): 0.000
         Weir Discharge Coef: 3.200
```

```
      Orifice Discharge Coef: 0.600


-----------------------------------------------------------------------------------------------
         Name: W-02                From Node: DW-02A
        Group: system-2              To Node: DW-02B
         Flow: Both                    Count: 1
         Type: Vertical: Mavis      Geometry: Rectangular

                    Span(in): 44.00
                    Rise(in): 12.00
                  Invert(ft): 0.430
       Control Elevation(ft): 0.430
                                          TABLE
             Bottom Clip(in): 0.000
                Top Clip(in): 0.000
         Weir Discharge Coef: 3.200
      Orifice Discharge Coef: 0.600


-----------------------------------------------------------------------------------------------
         Name: W-03                From Node: DW-03A
        Group: system-2              To Node: DW-03B
         Flow: Both                    Count: 1
         Type: Vertical: Mavis      Geometry: Rectangular

                    Span(in): 44.00
                    Rise(in): 12.00
                  Invert(ft): 0.730
       Control Elevation(ft): 0.730
                                          TABLE
             Bottom Clip(in): 0.000
                Top Clip(in): 0.000
         Weir Discharge Coef: 3.200
      Orifice Discharge Coef: 0.600


-----------------------------------------------------------------------------------------------
         Name: W-04                From Node: DW-04A
        Group: system-2              To Node: DW-04B
         Flow: Both                    Count: 1
         Type: Vertical: Mavis      Geometry: Rectangular

                    Span(in): 44.00
                    Rise(in): 12.00
                  Invert(ft): 1.130
       Control Elevation(ft): 1.130
                                          TABLE
             Bottom Clip(in): 0.000
                Top Clip(in): 0.000
         Weir Discharge Coef: 3.200
      Orifice Discharge Coef: 0.600


-----------------------------------------------------------------------------------------------
         Name: W-05                From Node: DW-05A
        Group: system-3              To Node: DW-05B
         Flow: Both                    Count: 1
         Type: Vertical: Mavis      Geometry: Rectangular

                    Span(in): 44.00
                    Rise(in): 12.00
                  Invert(ft): 0.450
       Control Elevation(ft): 0.450
                                          TABLE
             Bottom Clip(in): 0.000
```

```
                Top Clip(in): 0.000
         Weir Discharge Coef: 3.200
      Orifice Discharge Coef: 0.600



-------------------------------------------------------------------------------------------
         Name: W-06                From Node: DW-06A
        Group: system-4              To Node: DW-06B
         Flow: Both                    Count: 1
         Type: Vertical: Mavis      Geometry: Rectangular

                    Span(in): 44.00
                    Rise(in): 12.00
                  Invert(ft): 0.490
       Control Elevation(ft): 0.490
                                              TABLE
             Bottom Clip(in): 0.000
                Top Clip(in): 0.000
         Weir Discharge Coef: 3.200
      Orifice Discharge Coef: 0.600



-------------------------------------------------------------------------------------------
         Name: W-07                From Node: DW-07A
        Group: system-4              To Node: DW-07B
         Flow: Both                    Count: 1
         Type: Vertical: Mavis      Geometry: Rectangular

                    Span(in): 44.00
                    Rise(in): 12.00
                  Invert(ft): 0.880
       Control Elevation(ft): 0.880
                                              TABLE
             Bottom Clip(in): 0.000
                Top Clip(in): 0.000
         Weir Discharge Coef: 3.200
      Orifice Discharge Coef: 0.600



-------------------------------------------------------------------------------------------
         Name: W-08                From Node: DW-08A
        Group: system-4              To Node: DW-08B
         Flow: Both                    Count: 1
         Type: Vertical: Mavis      Geometry: Rectangular

                    Span(in): 44.00
                    Rise(in): 12.00
                  Invert(ft): 0.480
       Control Elevation(ft): 0.480
                                              TABLE
             Bottom Clip(in): 0.000
                Top Clip(in): 0.000
         Weir Discharge Coef: 3.200
      Orifice Discharge Coef: 0.600



-------------------------------------------------------------------------------------------
         Name: W-09                From Node: DW-09A
        Group: system-5              To Node: DW-09B
         Flow: Both                    Count: 1
         Type: Vertical: Mavis      Geometry: Rectangular

                    Span(in): 44.00
                    Rise(in): 12.00
                  Invert(ft): 0.490
       Control Elevation(ft): 0.490
```

```
                                                TABLE
            Bottom Clip(in): 0.000
               Top Clip(in): 0.000
         Weir Discharge Coef: 3.200
      Orifice Discharge Coef: 0.600



-------------------------------------------------------------------------------------------------
         Name: W-10                From Node: DW-10A
        Group: system-6              To Node: DW-10B
         Flow: Both                    Count: 1
         Type: Vertical: Mavis      Geometry: Rectangular

                    Span(in): 44.00
                    Rise(in): 12.00
                  Invert(ft): 0.270
       Control Elevation(ft): 0.270
                                                TABLE
            Bottom Clip(in): 0.000
               Top Clip(in): 0.000
         Weir Discharge Coef: 3.200
      Orifice Discharge Coef: 0.600



-------------------------------------------------------------------------------------------------
         Name: W-11                From Node: DW-11A
        Group: system-6              To Node: DW-11B
         Flow: Both                    Count: 1
         Type: Vertical: Mavis      Geometry: Rectangular

                    Span(in): 44.00
                    Rise(in): 12.00
                  Invert(ft): 0.610
       Control Elevation(ft): 0.610
                                                TABLE
            Bottom Clip(in): 0.000
               Top Clip(in): 0.000
         Weir Discharge Coef: 3.200
      Orifice Discharge Coef: 0.600



-------------------------------------------------------------------------------------------------
         Name: W-12                From Node: DW-12A
        Group: system-7              To Node: DW-12B
         Flow: Both                    Count: 1
         Type: Vertical: Mavis      Geometry: Rectangular

                    Span(in): 44.00
                    Rise(in): 12.00
                  Invert(ft): 0.280
       Control Elevation(ft): 0.280
                                                TABLE
            Bottom Clip(in): 0.000
               Top Clip(in): 0.000
         Weir Discharge Coef: 3.200
      Orifice Discharge Coef: 0.600



=========================================================================================
==== Rating Curves ======================================================================
=========================================================================================

         Name: RC-01               From Node: DW-01B                  Count: 1
        Group: system-1              To Node: GW                       Flow: Positive

               TABLE           ELEV ON(ft)     ELEV OFF(ft)
```

```
          #1: OT1-NEW WELLS   0.000           0.000
          #2:                 0.000           0.000
          #3:                 0.000           0.000
          #4:                 0.000           0.000


-----------------------------------------------------------------------------------------------
        Name: RC-02               From Node: DW-02B                  Count: 1
       Group: system-2              To Node: GW                       Flow: Positive

              TABLE           ELEV ON(ft)     ELEV OFF(ft)
          #1: OT2-NEW WELLS   0.000           0.000
          #2:                 0.000           0.000
          #3:                 0.000           0.000
          #4:                 0.000           0.000


-----------------------------------------------------------------------------------------------
        Name: RC-03               From Node: DW-03B                  Count: 1
       Group: system-2              To Node: GW                       Flow: Positive

              TABLE           ELEV ON(ft)     ELEV OFF(ft)
          #1: OT2-NEW WELLS   0.000           0.000
          #2:                 0.000           0.000
          #3:                 0.000           0.000
          #4:                 0.000           0.000


-----------------------------------------------------------------------------------------------
        Name: RC-04               From Node: DW-04B                  Count: 1
       Group: system-2              To Node: GW                       Flow: Positive

              TABLE           ELEV ON(ft)     ELEV OFF(ft)
          #1: OT2-NEW WELLS   0.000           0.000
          #2:                 0.000           0.000
          #3:                 0.000           0.000
          #4:                 0.000           0.000


-----------------------------------------------------------------------------------------------
        Name: RC-05               From Node: DW-05B                  Count: 1
       Group: system-3              To Node: GW                       Flow: Positive

              TABLE           ELEV ON(ft)     ELEV OFF(ft)
          #1: OT3-NEW WELLS   0.000           0.000
          #2:                 0.000           0.000
          #3:                 0.000           0.000
          #4:                 0.000           0.000


-----------------------------------------------------------------------------------------------
        Name: RC-06               From Node: DW-06B                  Count: 1
       Group: system-4              To Node: GW                       Flow: Positive

              TABLE           ELEV ON(ft)     ELEV OFF(ft)
          #1: OT4-NEW WELLS   0.000           0.000
          #2:                 0.000           0.000
          #3:                 0.000           0.000
          #4:                 0.000           0.000


-----------------------------------------------------------------------------------------------
        Name: RC-07               From Node: DW-07B                  Count: 1
       Group: system-4              To Node: GW                       Flow: Positive
```

```
              TABLE           ELEV ON(ft)     ELEV OFF(ft)
         #1: OT4-NEW WELLS    0.000           0.000
         #2:                  0.000           0.000
         #3:                  0.000           0.000
         #4:                  0.000           0.000


-------------------------------------------------------------------------------------------------
         Name: RC-08               From Node: DW-08B                  Count: 1
        Group: system-4              To Node: GW                       Flow: Positive

              TABLE           ELEV ON(ft)     ELEV OFF(ft)
         #1: OT4-NEW WELLS    0.000           0.000
         #2:                  0.000           0.000
         #3:                  0.000           0.000
         #4:                  0.000           0.000


-------------------------------------------------------------------------------------------------
         Name: RC-09               From Node: DW-09B                  Count: 1
        Group: system-5              To Node: GW                       Flow: Positive

              TABLE           ELEV ON(ft)     ELEV OFF(ft)
         #1: OT5-NEW WELLS    0.000           0.000
         #2:                  0.000           0.000
         #3:                  0.000           0.000
         #4:                  0.000           0.000


-------------------------------------------------------------------------------------------------
         Name: RC-10               From Node: DW-10B                  Count: 1
        Group: system-6              To Node: GW                       Flow: Positive

              TABLE           ELEV ON(ft)     ELEV OFF(ft)
         #1: OT6-NEW WELLS    0.000           0.000
         #2:                  0.000           0.000
         #3:                  0.000           0.000
         #4:                  0.000           0.000


-------------------------------------------------------------------------------------------------
         Name: RC-11               From Node: DW-11B                  Count: 1
        Group: system-6              To Node: GW                       Flow: Positive

              TABLE           ELEV ON(ft)     ELEV OFF(ft)
         #1: OT6-NEW WELLS    0.000           0.000
         #2:                  0.000           0.000
         #3:                  0.000           0.000
         #4:                  0.000           0.000


-------------------------------------------------------------------------------------------------
         Name: RC-12               From Node: DW-12B                  Count: 1
        Group: system-7              To Node: GW                       Flow: Positive

              TABLE           ELEV ON(ft)     ELEV OFF(ft)
         #1: OT7-NEW WELLS    0.000           0.000
         #2:                  0.000           0.000
         #3:                  0.000           0.000
         #4:                  0.000           0.000


-------------------------------------------------------------------------------------------------
```

```
         Name: RCE-01              From Node: EW-01                   Count: 1
        Group: system-1              To Node: GW                       Flow: Positive

               TABLE           ELEV ON(ft)     ELEV OFF(ft)
           #1: OT1-EX WELLS    0.000           0.000
           #2:                 0.000           0.000
           #3:                 0.000           0.000
           #4:                 0.000           0.000


-----------------------------------------------------------------------------------------------
         Name: RCE-02              From Node: EW-02                   Count: 1
        Group: system-3              To Node: GW                       Flow: Positive

               TABLE           ELEV ON(ft)     ELEV OFF(ft)
           #1: OT3-EX WELLS    0.000           0.000
           #2:                 0.000           0.000
           #3:                 0.000           0.000
           #4:                 0.000           0.000


-----------------------------------------------------------------------------------------------
         Name: RCE-03              From Node: EW-03                   Count: 1
        Group: system-4              To Node: GW                       Flow: Positive

               TABLE           ELEV ON(ft)     ELEV OFF(ft)
           #1: OT4-EX WELLS    0.000           0.000
           #2:                 0.000           0.000
           #3:                 0.000           0.000
           #4:                 0.000           0.000


-----------------------------------------------------------------------------------------------
         Name: RCE-04              From Node: EW-04                   Count: 1
        Group: system-5              To Node: GW                       Flow: Positive

               TABLE           ELEV ON(ft)     ELEV OFF(ft)
           #1: OT5-EX WELLS    0.000           0.000
           #2:                 0.000           0.000
           #3:                 0.000           0.000
           #4:                 0.000           0.000


-----------------------------------------------------------------------------------------------
         Name: RCE-05              From Node: EW-05                   Count: 1
        Group: system-6              To Node: GW                       Flow: Positive

               TABLE           ELEV ON(ft)     ELEV OFF(ft)
           #1: OT6-EX WELLS    0.000           0.000
           #2:                 0.000           0.000
           #3:                 0.000           0.000
           #4:                 0.000           0.000


=============================================================================================
==== Hydrology Simulations ==================================================================
=============================================================================================

         Name: 10Y1HR
     Filename: P:\060851.00 - South Roosevelt Blvd\Drainage\icpr\10Y1HR.R32

      Override Defaults: Yes
    Storm Duration(hrs): 1.00
          Rainfall File: Fdot-1
    Rainfall Amount(in): 3.10
```

```
Time(hrs)       Print Inc(min)
--------------- ---------------
1.000           5.00
73.000          15.00

-----------------------------------------------------------------------------------------------
         Name: 10Y24HR
     Filename: P:\060851.00 - South Roosevelt Blvd\Drainage\icpr\10Y24HR.R32

      Override Defaults: Yes
    Storm Duration(hrs): 24.00
          Rainfall File: Fdot-24
    Rainfall Amount(in): 9.60

Time(hrs)       Print Inc(min)
--------------- ---------------
24.000          5.00
96.000          15.00

-----------------------------------------------------------------------------------------------
         Name: 10Y8H
     Filename: P:\060851.00 - South Roosevelt Blvd\Drainage\icpr\10Y8H.R32

      Override Defaults: Yes
    Storm Duration(hrs): 8.00
          Rainfall File: Fdot-8
    Rainfall Amount(in): 6.00

Time(hrs)       Print Inc(min)
--------------- ---------------
8.000           5.00
80.000          15.00

-----------------------------------------------------------------------------------------------
         Name: 25YR72HR
     Filename: P:\060851.00 - South Roosevelt Blvd\Drainage\icpr\25YR72HR.R32

      Override Defaults: Yes
    Storm Duration(hrs): 72.00
          Rainfall File: Sfwmd72
    Rainfall Amount(in): 12.00

Time(hrs)       Print Inc(min)
--------------- ---------------
72.000          5.00
144.000         15.00

===============================================================================================
==== Routing Simulations ======================================================================
===============================================================================================

         Name: 10Y1HR             Hydrology Sim: 10Y1HR
     Filename: P:\060851.00 - South Roosevelt Blvd\Drainage\icpr\10Y1HR.I32

      Execute: Yes         Restart: No            Patch: No
  Alternative: No

        Max Delta Z(ft): 1.00                     Delta Z Factor: 0.00500
    Time Step Optimizer: 10.000
        Start Time(hrs): 0.000                     End Time(hrs): 5.00
     Min Calc Time(sec): 0.5000               Max Calc Time(sec): 60.0000
        Boundary Stages: 10Y-1H                   Boundary Flows:


Time(hrs)       Print Inc(min)
--------------- ---------------
1.000           5.000
25.000          15.000
```

```
Group           Run
--------------- -----
BASE            Yes
system-1        Yes
system-2        Yes
system-3        Yes
system-4        Yes
system-5        Yes
system-6        Yes
system-7        Yes


-------------------------------------------------------------------------------------------------
         Name: 10Y24HR             Hydrology Sim: 10Y24HR
     Filename: P:\060851.00 - South Roosevelt Blvd\Drainage\icpr\10Y24HR.I32

      Execute: Yes         Restart: No            Patch: No
  Alternative: No

        Max Delta Z(ft): 1.00                     Delta Z Factor: 0.00500
    Time Step Optimizer: 10.000
        Start Time(hrs): 0.000                     End Time(hrs): 28.00
     Min Calc Time(sec): 0.5000               Max Calc Time(sec): 60.0000
        Boundary Stages: 10Y-24H                  Boundary Flows:


Time(hrs)       Print Inc(min)
--------------- ---------------
24.000          5.000
48.000          15.000

Group           Run
--------------- -----
BASE            Yes
system-1        Yes
system-2        Yes
system-3        Yes
system-4        Yes
system-5        Yes
system-6        Yes
system-7        Yes


-------------------------------------------------------------------------------------------------
         Name: 10Y8HR              Hydrology Sim: 10Y8H
     Filename: P:\060851.00 - South Roosevelt Blvd\Drainage\icpr\10Y8HR.I32

      Execute: Yes         Restart: No            Patch: No
  Alternative: No

        Max Delta Z(ft): 1.00                     Delta Z Factor: 0.00500
    Time Step Optimizer: 10.000
        Start Time(hrs): 0.000                     End Time(hrs): 12.00
     Min Calc Time(sec): 0.5000               Max Calc Time(sec): 60.0000
        Boundary Stages: 10Y-8H                   Boundary Flows:


Time(hrs)       Print Inc(min)
--------------- ---------------
8.000           5.000
32.000          15.000

Group           Run
--------------- -----
BASE            Yes
system-1        Yes
system-2        Yes
```

```
system-3        Yes
system-4        Yes
system-5        Yes
system-6        Yes
system-7        Yes


-----------------------------------------------------------------------------------------------------
         Name: 25Y72HR             Hydrology Sim: 25YR72HR
     Filename: P:\060851.00 - South Roosevelt Blvd\Drainage\icpr\25Y72HR.I32

      Execute: Yes         Restart: No            Patch: No
  Alternative: No

        Max Delta Z(ft): 1.00                     Delta Z Factor: 0.00500
    Time Step Optimizer: 10.000
        Start Time(hrs): 0.000                     End Time(hrs): 76.00
     Min Calc Time(sec): 0.5000               Max Calc Time(sec): 60.0000
        Boundary Stages: 25Y-72H                  Boundary Flows:



Time(hrs)       Print Inc(min)
--------------- ---------------
72.000          5.000
96.000          15.000

Group           Run
--------------- -----
BASE            Yes
system-1        Yes
system-2        Yes
system-3        Yes
system-4        Yes
system-5        Yes
system-6        Yes
system-7        Yes


=========================================================================================
==== Boundary Conditions ================================================================
=========================================================================================

      Name: 10Y-24H               Node: GW                    Type: Stage

      Time(hrs)       Stage(ft)
--------------- ---------------
          0.000          -0.540
        999.000          -0.540

-----------------------------------------------------------------------------------------------------
      Name: 100Y-1H               Node: GW                    Type: Stage

      Time(hrs)       Stage(ft)
--------------- ---------------
          0.000          -0.540
        999.000          -0.540

-----------------------------------------------------------------------------------------------------
      Name: 25Y-72H               Node: GW                    Type: Stage

      Time(hrs)       Stage(ft)
--------------- ---------------
          0.000          -0.540
        999.000          -0.540

-----------------------------------------------------------------------------------------------------
      Name: 10Y-8H                Node: GW                    Type: Stage

      Time(hrs)       Stage(ft)
```

```
--------------- ---------------
          0.000          -0.540
        999.000          -0.540

-----------------------------------------------------------------------------------------------
      Name: 10Y-1H                Node: GW                    Type: Stage

      Time(hrs)       Stage(ft)
--------------- ---------------
          0.000          -0.540
        999.000          -0.540

-----------------------------------------------------------------------------------------------
      Name:                       Node:                       Type: Flow

      Time(hrs)       Flow(cfs)
--------------- ---------------
```

LINK CONNECTIVITY

South Roosevelt Blvd.
Link Connectivity Report

Name	Group	From Node	To Node	Type	U/S Geometry	D/S Geometry	Flow Dir
S1-P1	system-1	S-02	S-01	Pipe	Circular	Circular	Both
S1-P10	system-1	DW-01A	CDS-01	Pipe	Circular	Circular	Both
S1-P2	system-1	S-01	S-03	Pipe	Circular	Circular	Both
S1-P3	system-1	S-03	S-04	Pipe	Circular	Circular	Both
S1-P4	system-1	S-05	S-04	Pipe	Circular	Circular	Both
S1-P5	system-1	S-06	S-04	Pipe	Circular	Circular	Both
S1-P6	system-1	S-04	DW-01A	Pipe	Circular	Circular	Both
S1-P7	system-1	S-06	CDS-02	Pipe	Circular	Circular	Both
S1-P8	system-1	S-06A	S-06	Pipe	Circular	Circular	Both
S2-P1	system-2	S-08	S-07	Pipe	Circular	Circular	Both
S2-P10	system-2	DW-03A	CDS-04	Pipe	Circular	Circular	Both
S2-P11	system-2	S-13	DW-04A	Pipe	Circular	Circular	Both
S2-P12	system-2	DW-04A	CDS-05	Pipe	Circular	Circular	Both
S2-P2	system-2	S-07	S-09	Pipe	Circular	Circular	Both
S2-P3	system-2	S-12	S-12A	Pipe	Circular	Circular	Both
S2-P4	system-2	S-10	S-09	Pipe	Circular	Circular	Both
S2-P5	system-2	S-11	S-09	Pipe	Circular	Circular	Both
S2-P6a	system-2	S-12A	S-11	Pipe	Circular	Circular	Both
S2-P6b	system-2	S-12A	S-13	Pipe	Circular	Circular	Both
S2-P7	system-2	S-09	DW-02A	Pipe	Circular	Circular	Both
S2-P8	system-2	S-11	DW-03A	Pipe	Circular	Circular	Both
S2-P9	system-2	DW-02A	CDS-03	Pipe	Circular	Circular	Both
S3-P1	system-3	S-15	S-14	Pipe	Circular	Circular	Both
S3-P2	system-3	S-14	S-16	Pipe	Circular	Circular	Both
S3-P3	system-3	S-17	S-16	Pipe	Circular	Circular	Both
S3-P4	system-3	S-18	S-16	Pipe	Circular	Circular	Both
S3-P5	system-3	S-16	DW-05A	Pipe	Circular	Circular	Both
S3-P6	system-3	S-18	CDS-07	Pipe	Circular	Circular	Both
S3-P7	system-2	DW-05A	CDS-06	Pipe	Circular	Circular	Both
S3-P8	system-3	S-17A	S-17	Pipe	Circular	Circular	Both
S4-P1	system-4	S-20	S-19	Pipe	Circular	Circular	Both
S4-P10	system-4	S-27	S-25	Pipe	Circular	Circular	Both
S4-P11	system-4	S-25	DW-08A	Pipe	Circular	Circular	Both
S4-P12	system-4	DW-06A	CDS-08	Pipe	Circular	Circular	Both
S4-P13	system-4	S-24	DW-07A	Pipe	Circular	Circular	Both
S4-P14	system-4	DW-07A	CDS-10	Pipe	Circular	Circular	Both
S4-P15	system-4	DW-08A	CDS-11	Pipe	Circular	Circular	Both
S4-P2	system-4	S-19	S-21	Pipe	Circular	Circular	Both
S4-P3	system-4	S-22	S-21	Pipe	Circular	Circular	Both
S4-P4	system-4	S-23	S-21	Pipe	Circular	Circular	Both
S4-P5	system-4	S-21	DW-06A	Pipe	Circular	Circular	Both
S4-P6	system-4	S-23	CDS-09	Pipe	Circular	Circular	Both
S4-P7	system-4	S-24	S-23	Pipe	Circular	Circular	Both
S4-P8	system-4	S-24	S-25	Pipe	Circular	Circular	Both
S4-P9	system-4	S-26	S-25	Pipe	Circular	Circular	Both
S5-P1	system-5	S-28	S-29	Pipe	Circular	Circular	Both
S5-P2	system-5	S-30	S-29	Pipe	Circular	Circular	Both
S5-P3	system-5	S-31	S-29	Pipe	Circular	Circular	Both

South Roosevelt Blvd.
Link Connectivity Report

Name	Group	From Node	To Node	Type	U/S Geometry	D/S Geometry	Flow Dir
S5-P4	system-5	S-28	CDS-12	Pipe	Circular	Circular	Both
S5-P5	system-5	S-29	DW-09A	Pipe	Circular	Circular	Both
S5-P6	system-5	DW-09A	CDS-13	Pipe	Circular	Circular	Both
S6-P1	system-6	S-32	S-33	Pipe	Circular	Circular	Both
S6-P2	system-6	S-34	S-33	Pipe	Circular	Circular	Both
S6-P3	system-6	S-35	S-33	Pipe	Circular	Circular	Both
S6-P4	system-6	S-33	DW-10A	Pipe	Circular	Circular	Both
S6-P5	system-6	S-35	DW-11A	Pipe	Circular	Circular	Both
S6-P6	system-6	DW-11A	CDS-15	Pipe	Circular	Circular	Both
S6-P7	system-6	DW-10A	CDS-14	Pipe	Circular	Circular	Both
S6-P8	system-6	CDS-14	EW-05	Pipe	Circular	Circular	Both
S7-P1	system-7	S-37	S-36	Pipe	Circular	Circular	Both
S7-P2	system-7	S-38	S-37	Pipe	Circular	Circular	Both
S7-P3	system-7	S-36	DW-12A	Pipe	Circular	Circular	Both
S7-P4	system-7	DW-12A	CDS-16	Pipe	Circular	Circular	Both
W-01	system-1	DW-01A	DW-01B	Vertical WGO Mavis	Rectangular		Both
W-02	system-2	DW-02A	DW-02B	Vertical WGO Mavis	Rectangular		Both
W-03	system-2	DW-03A	DW-03B	Vertical WGO Mavis	Rectangular		Both
W-04	system-2	DW-04A	DW-04B	Vertical WGO Mavis	Rectangular		Both
W-05	system-3	DW-05A	DW-05B	Vertical WGO Mavis	Rectangular		Both
W-06	system-4	DW-06A	DW-06B	Vertical WGO Mavis	Rectangular		Both
W-07	system-4	DW-07A	DW-07B	Vertical WGO Mavis	Rectangular		Both
W-08	system-4	DW-08A	DW-08B	Vertical WGO Mavis	Rectangular		Both
W-09	system-5	DW-09A	DW-09B	Vertical WGO Mavis	Rectangular		Both
W-10	system-6	DW-10A	DW-10B	Vertical WGO Mavis	Rectangular		Both
W-11	system-6	DW-11A	DW-11B	Vertical WGO Mavis	Rectangular		Both
W-12	system-7	DW-12A	DW-12B	Vertical WGO Mavis	Rectangular		Both
DS-01	BASE	CDS-01	DW-01B	Drop Structure	Circular	Circular	Both
--> slot	BASE	CDS-01	DW-01B	Vertical WGO Fread	Rectangular		Both
DS-02	system-1	CDS-02	EW-01	Drop Structure	Circular	Circular	Both
--> slot	system-1	CDS-02	EW-01	Vertical WGO Fread	Rectangular		Both
DS-03	system-2	CDS-03	DW-02B	Drop Structure	Circular	Circular	Both
--> slot	system-2	CDS-03	DW-02B	Vertical WGO Fread	Rectangular		Both
DS-04	system-2	CDS-04	DW-03B	Drop Structure	Circular	Circular	Both
--> slot	system-2	CDS-04	DW-03B	Vertical WGO Fread	Rectangular		Both
DS-05	system-2	CDS-05	DW-04B	Drop Structure	Circular	Circular	Both
--> slot	system-2	CDS-05	DW-04B	Vertical WGO Fread	Rectangular		Both
DS-06	system-3	CDS-06	DW-05B	Drop Structure	Circular	Circular	Both
--> slot	system-3	CDS-06	DW-05B	Vertical WGO Fread	Rectangular		Both
DS-07	system-3	CDS-07	EW-02	Drop Structure	Circular	Circular	Both
--> slot	system-3	CDS-07	EW-02	Vertical WGO Fread	Rectangular		Both
DS-08	system-4	CDS-08	DW-06B	Drop Structure	Circular	Circular	Both
--> slot	system-4	CDS-08	DW-06B	Vertical WGO Fread	Rectangular		Both
DS-09	system-4	CDS-09	EW-03	Drop Structure	Circular	Circular	Both
--> slot	system-4	CDS-09	EW-03	Vertical WGO Fread	Rectangular		Both
DS-10	system-4	CDS-10	DW-07B	Drop Structure	Circular	Circular	Both
--> slot	system-4	CDS-10	DW-07B	Vertical WGO Fread	Rectangular		Both
DS-11	system-4	CDS-11	DW-08B	Drop Structure	Circular	Circular	Both

South Roosevelt Blvd.
Link Connectivity Report

Name	Group	From Node	To Node	Type	U/S Geometry	D/S Geometry	Flow Dir
--> slot	system-4	CDS-11	DW-08B	Vertical WGO Fread	Rectangular		Both
DS-12	system-5	CDS-12	EW-04	Drop Structure	Circular	Circular	Both
--> slot	system-5	CDS-12	EW-04	Vertical WGO Fread	Rectangular		Both
DS-13	system-5	CDS-13	DW-09B	Drop Structure	Circular	Circular	Both
--> slot	system-5	CDS-13	DW-09B	Vertical WGO Fread	Rectangular		Both
DS-14	system-6	CDS-14	DW-10B	Drop Structure	Circular	Circular	Both
--> slot	system-6	CDS-14	DW-10B	Vertical WGO Fread	Rectangular		Both
DS-15	system-6	CDS-15	DW-11B	Drop Structure	Circular	Circular	Both
--> slot	system-6	CDS-15	DW-11B	Vertical WGO Fread	Rectangular		Both
DS-16	BASE	CDS-16	DW-12B	Drop Structure	Circular	Circular	Both
--> slot	BASE	CDS-16	DW-12B	Vertical WGO Fread	Rectangular		Both
RC-01	system-1	DW-01B	GW	Rating Curve			Positive
RC-02	system-2	DW-02B	GW	Rating Curve			Positive
RC-03	system-2	DW-03B	GW	Rating Curve			Positive
RC-04	system-2	DW-04B	GW	Rating Curve			Positive
RC-05	system-3	DW-05B	GW	Rating Curve			Positive
RC-06	system-4	DW-06B	GW	Rating Curve			Positive
RC-07	system-4	DW-07B	GW	Rating Curve			Positive
RC-08	system-4	DW-08B	GW	Rating Curve			Positive
RC-09	system-5	DW-09B	GW	Rating Curve			Positive
RC-10	system-6	DW-10B	GW	Rating Curve			Positive
RC-11	system-6	DW-11B	GW	Rating Curve			Positive
RC-12	system-7	DW-12B	GW	Rating Curve			Positive
RCE-01	system-1	EW-01	GW	Rating Curve			Positive
RCE-02	system-3	EW-02	GW	Rating Curve			Positive
RCE-03	system-4	EW-03	GW	Rating Curve			Positive
RCE-04	system-5	EW-04	GW	Rating Curve			Positive
RCE-05	system-6	EW-05	GW	Rating Curve			Positive

NODE MAXIMUM CONDITION REPORT

South Roosevelt Blvd.
Node Maximum Conditions Report

Name	Group	Simulation	Max Time Stage hrs	Max Stage ft	Warning Stage ft	Max Delta Stage ft	Max Surf Area ft2	Max Time Inflow hrs	Max Inflow cfs	Max Time Outflow hrs	Max Outflow cfs
CDS-01	system-1	10Y1HR	0.80	1.454	3.300	0.0018	113	0.57	1.783	0.57	1.706
CDS-02	system-1	10Y1HR	0.80	1.466	3.580	0.0017	113	0.49	1.449	0.48	1.333
CDS-03	system-2	10Y1HR	0.74	1.487	2.600	0.0066	113	0.46	2.618	0.68	0.936
CDS-04	system-2	10Y1HR	0.75	1.427	2.990	0.0059	113	0.34	1.552	0.52	1.109
CDS-05	system-2	10Y1HR	0.75	1.399	3.450	0.0069	113	0.54	1.644	0.54	1.561
CDS-06	system-3	10Y1HR	0.77	2.087	2.830	0.0060	113	0.43	2.397	0.56	0.948
CDS-07	system-3	10Y1HR	0.77	2.084	3.220	0.0015	113	0.69	1.591	0.74	1.546
CDS-08	system-4	10Y1HR	0.75	1.621	2.760	0.0061	113	0.45	1.916	0.64	0.870
CDS-09	system-4	10Y1HR	0.74	1.603	3.100	0.0023	113	0.43	1.729	0.43	1.561
CDS-10	system-4	10Y1HR	0.74	1.574	3.100	0.0067	113	0.52	1.718	0.52	1.642
CDS-11	system-4	10Y1HR	0.75	1.595	2.730	0.0076	113	0.45	3.431	0.65	0.864
CDS-12	system-5	10Y1HR	0.75	1.714	3.070	0.0021	113	0.43	1.576	0.43	1.465
CDS-13	system-5	10Y1HR	0.75	1.712	2.760	0.0059	113	0.45	1.808	0.62	0.982
CDS-14	system-6	10Y1HR	0.72	1.332	2.540	-0.0034	114	0.46	1.334	0.65	1.256
CDS-15	system-6	10Y1HR	0.72	1.308	2.830	0.0070	113	0.46	2.537	0.64	0.624
CDS-16	system-7	10Y1HR	0.76	1.503	2.540	-0.0041	113	0.71	1.101	0.62	0.729
DW-01A	system-1	10Y1HR	0.79	1.468	3.310	0.0046	113	1.04	2.506	0.70	2.360
DW-01B	system-1	10Y1HR	0.80	1.436	3.360	0.0062	113	0.77	1.928	0.80	1.924
DW-02A	system-2	10Y1HR	0.74	1.489	2.670	-0.0054	113	0.68	2.401	0.46	3.440
DW-02B	system-2	10Y1HR	0.74	1.481	2.730	0.0081	113	0.68	3.113	0.74	2.010
DW-03A	system-2	10Y1HR	0.75	1.435	2.960	0.0065	113	0.35	2.783	0.81	2.379
DW-03B	system-2	10Y1HR	0.75	1.414	3.010	0.0077	113	0.52	1.965	0.75	1.883
DW-04A	system-2	10Y1HR	0.75	1.413	3.410	0.0068	113	0.41	3.492	0.70	1.864
DW-04B	system-2	10Y1HR	0.75	1.380	3.460	0.0052	113	0.73	1.822	0.75	1.819
DW-05A	system-4	10Y1HR	0.77	2.097	2.730	0.0061	113	0.72	3.201	0.56	4.133
DW-05B	system-3	10Y1HR	0.77	2.078	2.780	0.0078	113	0.56	3.956	0.77	3.141
DW-06A	system-3	10Y1HR	0.74	1.630	2.680	-0.0062	113	0.64	2.757	0.64	4.038
DW-06B	system-4	10Y1HR	0.74	1.617	2.730	0.0078	113	0.64	3.968	0.74	2.269
DW-07A	system-4	10Y1HR	0.74	1.588	3.070	0.0068	113	0.41	3.420	0.70	2.185
DW-07B	system-4	10Y1HR	0.74	1.562	3.120	0.0074	113	0.73	2.168	0.74	2.163
DW-08A	system-4	10Y1HR	0.74	1.601	2.660	-0.0038	113	0.65	2.714	0.45	3.874
DW-08B	system-4	10Y1HR	0.75	1.589	2.720	0.0078	113	0.65	3.298	0.75	2.215
DW-09A	system-5	10Y1HR	0.75	1.718	2.680	0.0057	113	0.62	2.687	0.62	4.057
DW-09B	system-5	10Y1HR	0.75	1.706	2.730	0.0075	113	0.62	3.961	0.75	2.437
DW-10A	system-6	10Y1HR	0.72	1.345	2.460	-0.0039	113	0.65	2.909	0.65	3.318
DW-10B	system-6	10Y1HR	0.72	1.333	2.510	0.0067	113	0.65	2.830	0.72	1.728
DW-11A	system-6	10Y1HR	0.72	1.326	2.800	0.0060	113	0.64	1.799	0.46	2.537
DW-11B	system-6	10Y1HR	0.72	1.302	2.850	0.0068	113	0.69	1.692	0.72	1.670
DW-12A	system-7	10Y1HR	0.76	1.509	2.460	-0.0055	113	0.31	2.654	0.62	3.606
DW-12B	system-7	10Y1HR	0.76	1.497	2.510	0.0068	113	0.62	3.509	0.76	2.039
EW-01	system-1	10Y1HR	0.80	1.449	3.720	0.0059	113	0.48	1.333	0.80	0.970
EW-02	system-3	10Y1HR	0.78	2.039	3.520	0.0039	113	0.74	1.546	0.78	1.534
EW-03	system-4	10Y1HR	0.75	1.585	3.010	0.0069	113	0.43	1.561	0.75	1.100
EW-04	system-5	10Y1HR	0.75	1.691	3.150	0.0065	113	0.43	1.465	0.75	1.202
EW-05	system-6	10Y1HR	0.72	1.321	3.300	0.0015	114	0.71	1.249	0.72	0.849
GW	BASE	10Y1HR	0.00	-0.540	3.930	0.0000	0	0.75	30.857	0.00	0.000

South Roosevelt Blvd.
Node Maximum Conditions Report

Name	Group	Simulation	Max Time Stage hrs	Max Stage ft	Warning Stage ft	Max Delta Stage ft	Max Surf Area ft2	Max Time Inflow hrs	Max Inflow cfs	Max Time Outflow hrs	Max Outflow cfs
S-01	system-1	10Y1HR	0.78	1.540	2.490	0.0012	117	0.67	1.450	0.68	1.371
S-02	system-1	10Y1HR	0.78	1.542	2.490	0.0012	114	0.67	0.521	0.23	0.574
S-03	system-1	10Y1HR	0.79	1.516	2.890	0.0013	119	0.67	1.859	0.70	1.845
S-04	system-1	10Y1HR	0.79	1.477	3.010	-0.0063	122	0.70	2.855	1.04	2.506
S-05	system-1	10Y1HR	0.79	1.477	2.880	0.0019	114	0.67	0.310	0.39	0.866
S-06	system-1	10Y1HR	0.79	1.473	3.260	0.0027	119	0.66	0.961	0.39	1.323
S-06A	system-1	10Y1HR	0.79	1.473	2.690	-0.0016	115	0.67	0.221	0.86	0.639
S-07	system-2	10Y1HR	0.74	1.529	3.080	0.0018	119	0.68	1.398	0.68	1.381
S-08	system-2	10Y1HR	0.74	1.532	3.080	0.0014	115	0.67	0.564	0.68	0.537
S-09	system-2	10Y1HR	0.74	1.500	2.480	-0.0051	125	0.48	2.888	0.68	2.401
S-10	system-2	10Y1HR	0.74	1.516	2.480	0.0015	115	0.67	1.362	0.68	1.374
S-11	system-2	10Y1HR	0.75	1.442	2.940	0.0033	121	1.17	0.789	0.35	2.847
S-12	system-2	10Y1HR	0.75	1.446	3.150	0.0019	115	0.67	0.705	0.64	0.728
S-12A	system-2	10Y1HR	0.75	1.442	2.730	0.0025	120	0.64	1.195	0.70	1.589
S-13	system-2	10Y1HR	0.75	1.421	3.410	-0.0035	116	0.69	1.918	0.41	3.492
S-14	system-3	10Y1HR	0.77	2.155	3.310	0.0021	122	0.67	1.342	0.74	1.271
S-15	system-3	10Y1HR	0.77	2.158	3.320	0.0016	115	0.67	0.550	0.76	0.479
S-16	system-3	10Y1HR	0.77	2.121	2.730	0.0046	128	0.68	3.272	0.72	3.201
S-17	system-3	10Y1HR	0.77	2.137	2.740	0.0020	117	0.67	1.300	0.74	1.233
S-17A	system-3	10Y1HR	0.77	2.141	2.660	0.0016	116	0.67	0.564	0.76	0.491
S-18	system-3	10Y1HR	0.77	2.102	3.220	0.0015	119	0.67	0.667	0.74	0.583
S-19	system-4	10Y1HR	0.74	1.672	3.070	0.0016	120	0.65	1.388	0.64	1.352
S-20	system-4	10Y1HR	0.74	1.675	3.080	0.0016	115	0.67	0.493	0.65	0.454
S-21	system-4	10Y1HR	0.74	1.643	2.680	0.0026	125	0.64	2.635	0.64	2.757
S-22	system-4	10Y1HR	0.74	1.653	2.690	0.0018	115	0.67	1.029	0.64	1.078
S-23	system-4	10Y1HR	0.74	1.613	3.040	0.0017	127	0.43	1.020	0.22	1.322
S-24	system-4	10Y1HR	0.74	1.599	3.070	0.0032	126	0.67	0.648	0.39	3.540
S-25	system-4	10Y1HR	0.74	1.612	2.680	-0.0027	124	0.48	2.704	0.65	2.714
S-26	system-4	10Y1HR	0.74	1.628	2.690	0.0019	115	0.67	1.297	0.65	1.326
S-27	system-4	10Y1HR	0.74	1.619	3.040	0.0019	117	0.67	0.714	0.65	0.761
S-28	system-5	10Y1HR	0.75	1.726	3.070	0.0018	118	0.67	0.658	0.62	0.598
S-29	system-5	10Y1HR	0.75	1.732	2.680	0.0029	124	0.62	2.655	0.62	2.687
S-30	system-5	10Y1HR	0.75	1.748	2.690	0.0019	115	0.67	1.297	0.62	1.236
S-31	system-5	10Y1HR	0.75	1.739	3.040	0.0015	117	0.67	0.714	0.62	0.673
S-32	system-6	10Y1HR	0.72	1.377	2.920	0.0017	119	0.67	0.930	0.65	0.933
S-33	system-6	10Y1HR	0.72	1.363	2.500	0.0021	124	0.65	2.828	0.65	2.909
S-34	system-6	10Y1HR	0.71	1.384	2.510	0.0020	115	0.67	1.466	0.65	1.469
S-35	system-6	10Y1HR	0.72	1.349	2.850	-0.0031	117	0.67	0.761	0.46	2.057
S-36	system-7	10Y1HR	0.76	1.516	3.030	0.0025	118	0.67	2.160	0.31	2.654
S-37	system-7	10Y1HR	0.75	1.556	2.560	0.0012	120	0.67	1.659	0.68	1.611
S-38	system-7	10Y1HR	0.75	1.562	2.560	0.0012	115	0.67	0.761	0.69	0.702
CDS-01	system-1	10Y24HR	12.00	0.801	3.300	-0.0002	113	21.79	0.932	12.00	0.351
CDS-02	system-1	10Y24HR	12.00	0.801	3.580	-0.0003	113	2.95	1.012	12.00	0.340
CDS-03	system-2	10Y24HR	12.00	0.782	2.600	0.0060	113	3.54	2.945	12.00	0.196
CDS-04	system-2	10Y24HR	12.00	0.781	2.990	0.0065	113	24.26	0.008	12.00	0.243
CDS-05	system-2	10Y24HR	12.00	0.782	3.450	0.0066	113	24.24	0.007	12.00	0.249

South Roosevelt Blvd.
Node Maximum Conditions Report

Name	Group	Simulation	Max Time Stage hrs	Max Stage ft	Warning Stage ft	Max Delta Stage ft	Max Surf Area ft2	Max Time Inflow hrs	Max Inflow cfs	Max Time Outflow hrs	Max Outflow cfs
CDS-06	system-3	10Y24HR	12.00	0.818	2.830	0.0067	113	1.88	1.666	12.00	0.291
CDS-07	system-3	10Y24HR	12.01	0.818	3.220	0.0007	113	11.18	0.471	12.00	0.380
CDS-08	system-4	10Y24HR	12.00	0.765	2.760	0.0061	113	5.62	3.020	12.00	0.162
CDS-09	system-4	10Y24HR	12.00	0.767	3.100	-0.0005	113	1.20	0.821	12.03	0.314
CDS-10	system-4	10Y24HR	12.00	0.766	3.100	0.0060	113	5.56	3.030	12.00	0.168
CDS-11	system-4	10Y24HR	12.00	0.766	2.730	0.0067	113	1.93	1.451	12.00	0.165
CDS-12	system-5	10Y24HR	12.00	0.727	3.070	0.0006	113	12.13	0.142	12.00	0.300
CDS-13	system-5	10Y24HR	12.00	0.727	2.760	0.0066	113	1.99	1.675	12.00	0.028
CDS-14	system-6	10Y24HR	12.00	0.675	2.540	0.0006	114	15.49	1.183	1.45	0.010
CDS-15	system-6	10Y24HR	12.00	0.680	2.830	0.0067	113	2.02	1.612	0.00	0.000
CDS-16	system-7	10Y24HR	12.00	0.677	2.540	-0.0002	113	13.14	0.874	0.00	0.000
DW-01A	system-1	10Y24HR	12.00	0.806	3.310	0.0011	113	0.00	0.000	21.79	0.932
DW-01B	system-1	10Y24HR	12.01	0.606	3.360	0.0003	113	12.00	0.351	12.01	0.355
DW-02A	system-2	10Y24HR	12.00	0.786	2.670	-0.0043	113	3.66	0.560	3.54	3.252
DW-02B	system-2	10Y24HR	12.00	0.772	2.730	0.0013	113	12.00	0.730	12.00	0.666
DW-03A	system-2	10Y24HR	12.00	0.780	2.960	-0.0065	113	2.19	2.726	24.26	0.008
DW-03B	system-2	10Y24HR	12.01	0.619	3.010	0.0004	113	12.00	0.374	12.01	0.379
DW-04A	system-2	10Y24HR	12.00	0.781	3.410	-0.0065	113	2.66	2.502	24.24	0.007
DW-04B	system-2	10Y24HR	12.01	0.548	3.460	0.0003	113	12.00	0.249	12.01	0.246
DW-05A	system-4	10Y24HR	12.01	0.819	2.730	-0.0067	113	5.94	2.234	1.88	1.666
DW-05B	system-3	10Y24HR	12.00	0.807	2.780	0.0009	113	11.98	0.768	12.00	0.733
DW-06A	system-3	10Y24HR	12.00	0.769	2.680	-0.0045	113	8.15	0.607	5.62	3.279
DW-06B	system-4	10Y24HR	12.00	0.752	2.730	0.0007	113	12.00	0.678	12.00	0.629
DW-07A	system-4	10Y24HR	12.00	0.770	3.070	-0.0043	113	1.93	0.652	5.56	3.030
DW-07B	system-4	10Y24HR	12.01	0.508	3.120	0.0005	113	12.00	0.168	12.01	0.171
DW-08A	system-4	10Y24HR	12.00	0.764	2.660	-0.0066	113	5.63	2.276	1.93	1.451
DW-08B	system-4	10Y24HR	12.00	0.751	2.720	0.0009	113	12.00	0.574	12.00	0.627
DW-09A	system-5	10Y24HR	12.00	0.724	2.680	-0.0066	113	1.19	2.498	1.99	1.675
DW-09B	system-5	10Y24HR	12.01	0.705	2.730	0.0005	113	12.00	0.502	12.01	0.541
DW-10A	system-6	10Y24HR	12.00	0.681	2.460	0.0011	113	0.00	0.000	15.49	1.600
DW-10B	system-6	10Y24HR	12.00	0.667	2.510	0.0010	113	12.00	0.554	12.00	0.469
DW-11A	system-6	10Y24HR	12.00	0.679	2.800	-0.0067	113	8.26	1.673	2.02	1.612
DW-11B	system-6	10Y24HR	12.01	0.533	2.850	0.0003	113	12.00	0.211	12.01	0.217
DW-12A	system-7	10Y24HR	12.00	0.679	2.460	0.0021	113	0.00	0.000	13.14	1.274
DW-12B	system-7	10Y24HR	12.01	0.666	2.510	0.0006	113	12.00	0.542	12.01	0.467
EW-01	system-1	10Y24HR	12.00	0.796	3.720	0.0008	113	12.00	0.340	12.00	0.356
EW-02	system-3	10Y24HR	12.00	0.813	3.520	0.0006	113	12.00	0.380	12.00	0.371
EW-03	system-4	10Y24HR	12.00	0.762	3.010	0.0013	113	12.03	0.314	12.00	0.324
EW-04	system-5	10Y24HR	12.00	0.722	3.150	0.0009	113	12.00	0.300	12.00	0.286
EW-05	system-6	10Y24HR	12.00	0.675	3.300	-0.0004	114	1.45	0.010	12.00	0.242
GW	BASE	10Y24HR	0.00	-0.540	3.930	0.0000	0	12.00	7.080	0.00	0.000
S-01	system-1	10Y24HR	12.00	0.811	2.490	-0.0007	117	1.28	0.581	12.00	0.240
S-02	system-1	10Y24HR	12.00	0.812	2.490	0.0005	114	12.00	0.107	1.19	0.567
S-03	system-1	10Y24HR	12.00	0.810	2.890	0.0005	119	12.00	0.341	13.14	0.732
S-04	system-1	10Y24HR	12.00	0.804	3.010	-0.0016	122	2.51	2.193	0.00	0.000
S-05	system-1	10Y24HR	12.00	0.808	2.880	0.0003	114	12.00	0.064	2.51	0.950

South Roosevelt Blvd.
Node Maximum Conditions Report

Name	Group	Simulation	Max Time Stage hrs	Max Stage ft	Warning Stage ft	Max Delta Stage ft	Max Surf Area ft2	Max Time Inflow hrs	Max Inflow cfs	Max Time Outflow hrs	Max Outflow cfs
S-06	system-1	10Y24HR	12.00	0.804	3.260	0.0011	119	0.46	0.000	2.95	1.569
S-06A	system-1	10Y24HR	12.00	0.803	2.690	-0.0004	115	12.00	0.045	0.00	0.000
S-07	system-2	10Y24HR	12.00	0.791	3.080	-0.0015	119	3.66	0.258	12.33	0.607
S-08	system-2	10Y24HR	12.00	0.791	3.080	-0.0007	115	12.00	0.116	3.66	0.207
S-09	system-2	10Y24HR	12.00	0.786	2.480	0.0023	125	3.66	2.072	3.66	0.560
S-10	system-2	10Y24HR	12.00	0.791	2.480	-0.0019	115	12.00	0.280	12.00	0.721
S-11	system-2	10Y24HR	12.00	0.787	2.940	-0.0025	121	0.45	0.000	2.19	3.396
S-12	system-2	10Y24HR	12.00	0.788	3.150	-0.0003	115	12.00	0.145	12.00	0.530
S-12A	system-2	10Y24HR	12.00	0.785	2.730	0.0007	120	12.00	0.626	0.00	0.000
S-13	system-2	10Y24HR	12.00	0.787	3.410	-0.0030	116	0.45	0.000	2.66	2.502
S-14	system-3	10Y24HR	12.01	0.823	3.310	-0.0007	122	11.92	0.524	11.25	0.512
S-15	system-3	10Y24HR	12.01	0.824	3.320	-0.0010	115	12.00	0.113	5.94	0.353
S-16	system-3	10Y24HR	12.01	0.823	2.730	0.0047	128	11.25	1.756	5.94	2.234
S-17	system-3	10Y24HR	12.01	0.823	2.740	0.0010	117	12.00	0.533	11.18	0.697
S-17A	system-3	10Y24HR	12.01	0.824	2.660	-0.0012	116	12.00	0.116	8.16	0.372
S-18	system-3	10Y24HR	12.01	0.819	3.220	-0.0007	119	12.00	0.137	11.25	0.727
S-19	system-4	10Y24HR	12.00	0.774	3.070	-0.0015	120	8.15	0.331	8.15	0.622
S-20	system-4	10Y24HR	12.00	0.774	3.080	-0.0008	115	12.00	0.101	8.15	0.240
S-21	system-4	10Y24HR	12.00	0.768	2.680	0.0018	125	8.15	1.952	8.15	0.607
S-22	system-4	10Y24HR	12.00	0.773	2.690	-0.0020	115	12.00	0.211	5.62	0.710
S-23	system-4	10Y24HR	12.00	0.769	3.040	0.0006	127	0.45	0.000	1.20	1.362
S-24	system-4	10Y24HR	12.00	0.766	3.070	-0.0018	126	12.00	0.133	1.93	0.094
S-25	system-4	10Y24HR	12.00	0.772	2.680	-0.0040	124	8.15	0.550	5.63	2.276
S-26	system-4	10Y24HR	12.00	0.772	2.690	-0.0014	115	12.00	0.266	8.15	0.409
S-27	system-4	10Y24HR	12.00	0.771	3.040	-0.0011	117	12.00	0.147	8.15	0.302
S-28	system-5	10Y24HR	12.00	0.727	3.070	0.0008	118	12.00	0.135	0.00	0.000
S-29	system-5	10Y24HR	12.00	0.732	2.680	-0.0040	124	8.45	0.687	1.19	2.498
S-30	system-5	10Y24HR	12.00	0.732	2.690	-0.0013	115	12.00	0.266	8.45	0.453
S-31	system-5	10Y24HR	12.00	0.731	3.040	-0.0011	117	12.00	0.147	8.45	0.337
S-32	system-6	10Y24HR	12.00	0.685	2.920	0.0002	119	12.00	0.191	8.38	0.531
S-33	system-6	10Y24HR	12.00	0.680	2.500	-0.0018	124	10.17	2.022	0.00	0.000
S-34	system-6	10Y24HR	12.00	0.686	2.510	0.0006	115	12.00	0.301	11.08	0.720
S-35	system-6	10Y24HR	12.00	0.683	2.850	-0.0041	117	12.00	0.156	8.26	2.295
S-36	system-7	10Y24HR	12.00	0.678	3.030	0.0019	118	1.80	0.636	0.00	0.000
S-37	system-7	10Y24HR	12.00	0.682	2.560	0.0004	120	12.00	0.260	1.80	0.621
S-38	system-7	10Y24HR	12.00	0.682	2.560	-0.0003	115	12.00	0.156	12.00	0.063
CDS-01	system-1	10Y8HR	4.02	1.090	3.300	0.0089	113	3.14	4.088	4.00	1.214
CDS-02	system-1	10Y8HR	4.02	1.101	3.580	-0.0013	113	1.81	1.033	4.00	0.642
CDS-03	system-2	10Y8HR	4.00	1.049	2.600	0.0075	113	2.02	3.412	4.00	0.501
CDS-04	system-2	10Y8HR	4.01	1.029	2.990	0.0077	113	1.43	1.531	4.11	0.632
CDS-05	system-2	10Y8HR	4.01	1.015	3.450	0.0061	113	1.38	1.289	4.00	1.071
CDS-06	system-3	10Y8HR	4.01	1.445	2.830	0.0061	113	1.35	1.667	4.01	0.731
CDS-07	system-3	10Y8HR	4.01	1.446	3.220	0.0007	113	4.00	0.953	4.00	0.950
CDS-08	system-4	10Y8HR	4.01	1.130	2.760	0.0061	113	1.38	1.524	4.01	0.521
CDS-09	system-4	10Y8HR	4.01	1.125	3.100	-0.0009	113	4.00	0.660	4.00	0.658
CDS-10	system-4	10Y8HR	4.01	1.113	3.100	0.0061	113	1.37	1.435	3.25	0.830

South Roosevelt Blvd.
Node Maximum Conditions Report

Name	Group	Simulation	Max Time Stage hrs	Max Stage ft	Warning Stage ft	Max Delta Stage ft	Max Surf Area ft2	Max Time Inflow hrs	Max Inflow cfs	Max Time Outflow hrs	Max Outflow cfs
CDS-11	system-4	10Y8HR	4.01	1.119	2.730	0.0056	113	1.93	2.774	4.01	0.513
CDS-12	system-5	10Y8HR	4.01	1.194	3.070	0.0006	113	4.00	0.723	4.00	0.721
CDS-13	system-5	10Y8HR	4.01	1.192	2.760	0.0064	113	1.39	1.678	4.00	0.607
CDS-14	system-6	10Y8HR	4.00	0.942	2.540	0.0022	114	5.47	1.178	3.20	0.756
CDS-15	system-6	10Y8HR	4.01	0.936	2.830	0.0064	113	1.39	1.558	4.02	0.393
CDS-16	system-7	10Y8HR	4.01	1.074	2.540	0.0020	113	2.06	0.863	4.00	0.490
DW-01A	system-1	10Y8HR	4.01	1.104	3.310	-0.0096	113	3.14	1.778	3.14	4.088
DW-01B	system-1	10Y8HR	4.02	1.059	3.360	0.0011	113	4.00	1.214	4.02	1.207
DW-02A	system-2	10Y8HR	4.00	1.052	2.670	-0.0054	113	4.30	1.668	2.02	3.759
DW-02B	system-2	10Y8HR	4.00	1.039	2.730	0.0024	113	4.00	1.177	4.00	1.171
DW-03A	system-2	10Y8HR	4.01	1.032	2.960	-0.0075	113	1.47	2.750	1.43	1.531
DW-03B	system-2	10Y8HR	4.01	1.016	3.010	0.0011	113	4.00	1.129	4.01	1.126
DW-04A	system-2	10Y8HR	4.01	1.025	3.410	-0.0059	113	1.68	2.544	1.38	1.289
DW-04B	system-2	10Y8HR	4.01	0.986	3.460	0.0008	113	4.00	1.071	4.01	1.069
DW-05A	system-4	10Y8HR	4.01	1.451	2.730	-0.0060	113	1.91	2.190	3.99	1.924
DW-05B	system-3	10Y8HR	4.01	1.433	2.780	0.0020	113	3.99	1.921	4.01	1.920
DW-06A	system-3	10Y8HR	4.01	1.135	2.680	-0.0060	113	1.93	2.227	1.38	1.524
DW-06B	system-4	10Y8HR	4.01	1.120	2.730	0.0018	113	4.00	1.326	4.01	1.325
DW-07A	system-4	10Y8HR	4.01	1.120	3.070	-0.0060	113	1.80	2.611	1.37	1.435
DW-07B	system-4	10Y8HR	4.01	1.098	3.120	0.0005	113	4.00	1.283	4.01	1.282
DW-08A	system-4	10Y8HR	4.01	1.124	2.660	-0.0041	113	4.35	1.922	1.93	3.152
DW-08B	system-4	10Y8HR	4.01	1.109	2.720	0.0019	113	4.00	1.305	4.01	1.304
DW-09A	system-5	10Y8HR	4.01	1.195	2.680	-0.0063	113	1.03	2.499	1.39	1.678
DW-09B	system-5	10Y8HR	4.01	1.181	2.730	0.0015	113	4.00	1.441	4.01	1.440
DW-10A	system-6	10Y8HR	4.00	0.950	2.460	0.0020	113	3.12	1.935	2.06	1.606
DW-10B	system-6	10Y8HR	4.00	0.937	2.510	0.0020	113	4.00	0.978	4.00	0.977
DW-11A	system-6	10Y8HR	4.00	0.944	2.800	-0.0063	113	2.01	1.647	1.39	1.558
DW-11B	system-6	10Y8HR	4.01	0.927	2.850	0.0006	113	4.00	0.959	4.01	0.959
DW-12A	system-7	10Y8HR	4.01	1.076	2.460	0.0030	113	3.21	1.771	3.15	1.421
DW-12B	system-7	10Y8HR	4.01	1.065	2.510	0.0012	113	4.00	1.220	4.01	1.219
EW-01	system-1	10Y8HR	4.02	1.091	3.720	0.0016	113	4.00	0.642	4.02	0.634
EW-02	system-3	10Y8HR	4.01	1.426	3.520	0.0015	113	4.00	0.950	4.01	0.948
EW-03	system-4	10Y8HR	4.01	1.116	3.010	0.0024	113	4.00	0.658	4.01	0.657
EW-04	system-5	10Y8HR	4.01	1.183	3.150	0.0019	113	4.00	0.721	4.01	0.719
EW-05	system-6	10Y8HR	4.01	0.939	3.300	0.0017	114	3.20	0.670	4.01	0.490
GW	BASE	10Y8HR	0.00	-0.540	3.930	0.0000	0	4.01	18.444	0.00	0.000
S-01	system-1	10Y8HR	4.01	1.131	2.490	-0.0007	117	4.00	0.828	4.00	0.825
S-02	system-1	10Y8HR	4.01	1.132	2.490	0.0005	114	4.00	0.281	1.10	0.567
S-03	system-1	10Y8HR	4.01	1.122	2.890	-0.0007	119	4.00	1.090	4.00	1.165
S-04	system-1	10Y8HR	4.01	1.106	3.010	-0.0054	122	3.66	2.430	3.14	1.778
S-05	system-1	10Y8HR	4.02	1.108	2.880	-0.0021	114	4.00	0.167	1.61	0.946
S-06	system-1	10Y8HR	4.01	1.105	3.260	-0.0015	119	3.14	0.495	1.81	1.555
S-06A	system-1	10Y8HR	4.02	1.104	2.690	-0.0006	115	4.00	0.119	3.14	0.387
S-07	system-2	10Y8HR	4.00	1.065	3.080	-0.0015	119	4.00	0.773	4.00	0.777
S-08	system-2	10Y8HR	4.00	1.066	3.080	-0.0007	115	4.00	0.304	4.01	0.303
S-09	system-2	10Y8HR	4.00	1.055	2.480	0.0019	125	2.02	2.159	4.30	1.668

South Roosevelt Blvd.
Node Maximum Conditions Report

Name	Group	Simulation	Max Time Stage hrs	Max Stage ft	Warning Stage ft	Max Delta Stage ft	Max Surf Area ft2	Max Time Inflow hrs	Max Inflow cfs	Max Time Outflow hrs	Max Outflow cfs
S-10	system-2	10Y8HR	4.00	1.061	2.480	-0.0020	115	4.00	0.734	2.02	0.772
S-11	system-2	10Y8HR	4.01	1.037	2.940	-0.0051	121	4.32	0.735	1.47	3.322
S-12	system-2	10Y8HR	4.01	1.037	3.150	-0.0011	115	4.00	0.380	3.14	0.625
S-12A	system-2	10Y8HR	4.01	1.035	2.730	0.0022	120	4.11	0.792	4.32	1.350
S-13	system-2	10Y8HR	4.01	1.028	3.410	-0.0031	116	4.00	1.065	1.68	2.544
S-14	system-3	10Y8HR	4.01	1.473	3.310	0.0007	122	4.00	0.776	4.00	0.773
S-15	system-3	10Y8HR	4.01	1.474	3.320	-0.0009	115	4.00	0.296	1.94	0.350
S-16	system-3	10Y8HR	4.01	1.460	2.730	0.0045	128	3.99	1.931	1.91	2.190
S-17	system-3	10Y8HR	4.01	1.466	2.740	0.0010	117	4.00	0.754	4.00	0.750
S-17A	system-3	10Y8HR	4.01	1.468	2.660	-0.0011	116	4.00	0.304	5.19	0.370
S-18	system-3	10Y8HR	4.01	1.453	3.220	-0.0007	119	4.00	0.360	2.61	0.751
S-19	system-4	10Y8HR	4.00	1.150	3.070	0.0009	120	4.00	0.771	4.00	0.769
S-20	system-4	10Y8HR	4.00	1.151	3.080	-0.0011	115	4.00	0.266	1.96	0.373
S-21	system-4	10Y8HR	4.01	1.140	2.680	-0.0039	125	4.63	1.911	1.93	2.227
S-22	system-4	10Y8HR	4.00	1.143	2.690	-0.0013	115	4.00	0.554	4.71	0.688
S-23	system-4	10Y8HR	4.01	1.129	3.040	-0.0014	127	1.72	0.622	5.67	1.062
S-24	system-4	10Y8HR	4.01	1.124	3.070	-0.0023	126	4.00	0.349	1.80	3.556
S-25	system-4	10Y8HR	4.01	1.128	2.680	-0.0030	124	3.14	2.413	4.35	1.922
S-26	system-4	10Y8HR	4.00	1.134	2.690	-0.0019	115	4.00	0.699	3.14	0.825
S-27	system-4	10Y8HR	4.01	1.131	3.040	-0.0015	117	4.00	0.385	3.14	0.618
S-28	system-5	10Y8HR	4.01	1.198	3.070	0.0009	118	4.00	0.354	3.15	0.780
S-29	system-5	10Y8HR	4.01	1.201	2.680	-0.0038	124	3.16	1.934	1.03	2.499
S-30	system-5	10Y8HR	4.01	1.206	2.690	0.0015	115	4.00	0.699	3.16	0.722
S-31	system-5	10Y8HR	4.01	1.203	3.040	-0.0011	117	4.00	0.385	3.16	0.524
S-32	system-6	10Y8HR	4.00	0.960	2.920	0.0009	119	4.00	0.501	1.43	0.538
S-33	system-6	10Y8HR	4.00	0.955	2.500	0.0024	124	2.06	2.037	3.12	1.935
S-34	system-6	10Y8HR	4.00	0.962	2.510	0.0013	115	4.00	0.790	4.00	0.789
S-35	system-6	10Y8HR	4.00	0.951	2.850	-0.0039	117	4.00	0.410	2.01	2.259
S-36	system-7	10Y8HR	4.01	1.080	3.030	0.0026	118	4.00	1.225	3.21	1.771
S-37	system-7	10Y8HR	4.01	1.095	2.560	0.0004	120	4.00	0.928	4.00	0.926
S-38	system-7	10Y8HR	4.00	1.097	2.560	0.0004	115	4.00	0.410	4.00	0.409
CDS-01	system-1	25Y72HR	60.09	1.677	3.300	0.0096	113	59.58	4.160	59.75	1.337
CDS-02	system-1	25Y72HR	60.09	1.691	3.580	-0.0012	113	60.02	1.211	60.06	1.186
CDS-03	system-2	25Y72HR	60.06	1.667	2.600	0.0061	113	54.66	3.020	59.88	0.937
CDS-04	system-2	25Y72HR	60.07	1.589	2.990	0.0067	113	60.19	1.245	60.17	0.917
CDS-05	system-2	25Y72HR	60.07	1.554	3.450	0.0067	113	59.76	1.420	59.77	1.325
CDS-06	system-3	25Y72HR	60.13	2.548	2.830	0.0067	113	59.75	1.082	59.75	0.950
CDS-07	system-3	25Y72HR	60.13	2.543	3.220	-0.0013	113	59.98	1.817	59.99	1.713
CDS-08	system-4	25Y72HR	60.07	1.819	2.760	0.0061	113	57.76	3.031	59.85	0.869
CDS-09	system-4	25Y72HR	60.07	1.797	3.100	-0.0009	113	60.00	1.328	60.03	1.293
CDS-10	system-4	25Y72HR	60.07	1.759	3.100	0.0060	113	57.72	3.041	59.64	1.030
CDS-11	system-4	25Y72HR	60.06	1.783	2.730	0.0067	113	59.86	0.929	59.86	0.864
CDS-12	system-5	25Y72HR	60.07	1.931	3.070	0.0010	113	60.00	1.454	60.03	1.414
CDS-13	system-5	25Y72HR	60.07	1.927	2.760	0.0061	113	58.70	3.019	59.83	0.983
CDS-14	system-6	25Y72HR	60.05	1.463	2.540	-0.0035	114	59.87	1.306	60.16	1.276
CDS-15	system-6	25Y72HR	60.05	1.435	2.830	0.0068	113	4.84	1.646	59.79	0.662

South Roosevelt Blvd.
Node Maximum Conditions Report

Name	Group	Simulation	Max Time Stage hrs	Max Stage ft	Warning Stage ft	Max Delta Stage ft	Max Surf Area ft2	Max Time Inflow hrs	Max Inflow cfs	Max Time Outflow hrs	Max Outflow cfs
CDS-16	system-7	25Y72HR	60.07	1.693	2.540	0.0044	113	60.12	1.240	60.10	0.739
DW-01A	system-1	25Y72HR	60.09	1.694	3.310	-0.0102	113	60.47	2.592	59.58	4.160
DW-01B	system-1	25Y72HR	60.09	1.662	3.360	0.0008	113	60.08	2.356	60.09	2.352
DW-02A	system-2	25Y72HR	60.06	1.672	2.670	-0.0046	113	60.00	2.505	59.88	3.834
DW-02B	system-2	25Y72HR	60.06	1.661	2.730	0.0068	113	59.88	3.777	60.06	2.351
DW-03A	system-2	25Y72HR	60.07	1.597	2.960	-0.0067	113	5.44	2.714	60.12	2.522
DW-03B	system-2	25Y72HR	60.07	1.576	3.010	-0.0007	113	60.02	2.225	60.07	2.189
DW-04A	system-2	25Y72HR	60.07	1.570	3.410	-0.0067	113	8.51	2.472	60.02	2.158
DW-04B	system-2	25Y72HR	60.07	1.538	3.460	0.0009	113	60.05	2.121	60.07	2.117
DW-05A	system-4	25Y72HR	60.13	2.559	2.730	-0.0067	113	59.98	3.533	59.75	4.039
DW-05B	system-3	25Y72HR	60.13	2.539	2.780	0.0072	113	59.75	3.907	59.93	3.220
DW-06A	system-3	25Y72HR	60.06	1.833	2.680	-0.0062	113	60.00	2.825	59.85	4.036
DW-06B	system-4	25Y72HR	60.06	1.815	2.730	0.0072	113	59.85	3.965	60.06	2.645
DW-07A	system-4	25Y72HR	60.07	1.776	3.070	-0.0043	113	60.01	2.567	57.72	3.041
DW-07B	system-4	25Y72HR	60.07	1.748	3.120	0.0031	113	60.05	2.522	60.07	2.517
DW-08A	system-4	25Y72HR	60.07	1.793	2.660	-0.0067	113	60.01	2.757	59.86	4.000
DW-08B	system-4	25Y72HR	60.06	1.777	2.720	0.0071	113	59.86	3.935	60.06	2.572
DW-09A	system-5	25Y72HR	60.07	1.936	2.680	-0.0048	113	60.00	2.901	59.83	4.036
DW-09B	system-5	25Y72HR	60.07	1.920	2.730	0.0071	113	59.83	3.949	60.07	2.843
DW-10A	system-6	25Y72HR	60.05	1.484	2.460	-0.0050	113	59.97	3.057	59.87	4.428
DW-10B	system-6	25Y72HR	60.05	1.467	2.510	0.0070	113	59.87	3.537	60.05	1.983
DW-11A	system-6	25Y72HR	60.05	1.459	2.800	-0.0067	113	60.00	1.998	60.00	2.071
DW-11B	system-6	25Y72HR	60.05	1.431	2.850	0.0008	113	60.01	1.940	60.05	1.915
DW-12A	system-7	25Y72HR	60.07	1.698	2.460	-0.0055	113	60.00	2.625	59.81	3.561
DW-12B	system-7	25Y72HR	60.07	1.684	2.510	0.0067	113	59.81	3.485	60.07	2.396
EW-01	system-1	25Y72HR	60.09	1.670	3.720	0.0007	113	60.06	1.186	60.09	1.179
EW-02	system-3	25Y72HR	60.14	2.495	3.520	-0.0013	113	59.99	1.713	59.95	1.610
EW-03	system-4	25Y72HR	60.07	1.775	3.010	0.0008	113	60.03	1.293	60.07	1.282
EW-04	system-5	25Y72HR	60.07	1.902	3.150	0.0009	113	60.03	1.414	60.07	1.404
EW-05	system-6	25Y72HR	60.05	1.455	3.300	-0.0019	114	60.14	1.244	60.05	0.975
GW	BASE	25Y72HR	0.00	-0.540	3.930	0.0000	0	60.07	35.521	0.00	0.000
S-01	system-1	25Y72HR	60.08	1.801	2.490	0.0008	117	60.00	1.686	60.01	1.638
S-02	system-1	25Y72HR	60.08	1.804	2.490	0.0008	114	60.00	0.590	2.02	0.565
S-03	system-1	25Y72HR	60.09	1.766	2.890	0.0009	119	60.00	2.192	60.01	2.148
S-04	system-1	25Y72HR	60.09	1.708	3.010	-0.0068	122	59.75	3.018	60.47	2.592
S-05	system-1	25Y72HR	60.09	1.709	2.880	-0.0021	114	60.00	0.351	7.00	0.952
S-06	system-1	25Y72HR	60.09	1.702	3.260	0.0035	119	59.81	0.974	9.30	1.595
S-06A	system-1	25Y72HR	60.09	1.703	2.690	-0.0020	115	60.00	0.250	60.27	0.744
S-07	system-2	25Y72HR	60.06	1.726	3.080	-0.0015	119	60.00	1.589	60.00	1.561
S-08	system-2	25Y72HR	60.06	1.730	3.080	0.0008	115	60.00	0.638	60.00	0.606
S-09	system-2	25Y72HR	60.06	1.686	2.480	0.0028	125	60.00	2.516	60.00	2.505
S-10	system-2	25Y72HR	60.06	1.709	2.480	-0.0020	115	60.00	1.541	60.00	1.525
S-11	system-2	25Y72HR	60.07	1.608	2.940	-0.0048	121	60.33	0.754	5.44	3.429
S-12	system-2	25Y72HR	60.06	1.614	3.150	0.0010	115	60.00	0.797	60.00	0.835
S-12A	system-2	25Y72HR	60.07	1.608	2.730	0.0026	120	60.00	1.365	60.02	1.718
S-13	system-2	25Y72HR	60.07	1.581	3.410	-0.0029	116	60.02	2.202	8.51	2.472

South Roosevelt Blvd.
Node Maximum Conditions Report

Name	Group	Simulation	Max Time Stage hrs	Max Stage ft	Warning Stage ft	Max Delta Stage ft	Max Surf Area ft2	Max Time Inflow hrs	Max Inflow cfs	Max Time Outflow hrs	Max Outflow cfs
S-14	system-3	25Y72HR	60.13	2.622	3.310	-0.0013	122	60.00	1.533	60.04	1.435
S-15	system-3	25Y72HR	60.13	2.624	3.320	-0.0013	115	60.00	0.622	60.05	0.531
S-16	system-3	25Y72HR	60.13	2.584	2.730	0.0047	779	60.01	3.763	59.98	3.533
S-17	system-3	25Y72HR	60.13	2.602	2.740	-0.0013	362	60.00	1.486	60.02	1.390
S-17A	system-3	25Y72HR	60.13	2.605	2.660	-0.0013	116	60.00	0.638	60.04	0.547
S-18	system-3	25Y72HR	60.13	2.563	3.220	-0.0013	119	60.00	0.754	59.52	0.686
S-19	system-4	25Y72HR	60.06	1.890	3.070	-0.0015	120	60.01	1.578	60.01	1.551
S-20	system-4	25Y72HR	60.06	1.893	3.080	0.0009	115	60.00	0.558	60.01	0.526
S-21	system-4	25Y72HR	60.06	1.850	2.680	0.0018	125	60.01	2.816	60.00	2.825
S-22	system-4	25Y72HR	60.06	1.864	2.690	-0.0020	115	60.00	1.164	60.01	1.149
S-23	system-4	25Y72HR	60.07	1.810	3.040	0.0012	127	59.60	0.114	2.08	1.369
S-24	system-4	25Y72HR	60.07	1.792	3.070	-0.0017	126	60.00	0.733	60.01	0.708
S-25	system-4	25Y72HR	60.07	1.809	2.680	-0.0040	124	60.01	2.750	60.01	2.757
S-26	system-4	25Y72HR	60.07	1.830	2.690	0.0015	115	60.00	1.466	60.01	1.447
S-27	system-4	25Y72HR	60.07	1.818	3.040	-0.0011	117	60.00	0.808	60.01	0.802
S-28	system-5	25Y72HR	60.07	1.946	3.070	0.0010	118	60.00	0.744	5.49	1.505
S-29	system-5	25Y72HR	60.07	1.955	2.680	0.0021	124	60.00	2.954	60.00	2.901
S-30	system-5	25Y72HR	60.07	1.976	2.690	-0.0019	115	60.00	1.466	60.00	1.415
S-31	system-5	25Y72HR	60.07	1.965	3.040	-0.0016	117	60.00	0.808	60.03	0.759
S-32	system-6	25Y72HR	60.04	1.525	2.920	0.0010	119	60.00	1.052	60.00	1.023
S-33	system-6	25Y72HR	60.04	1.506	2.500	0.0021	124	60.00	3.058	59.97	3.057
S-34	system-6	25Y72HR	60.04	1.534	2.510	0.0014	115	60.00	1.658	60.00	1.628
S-35	system-6	25Y72HR	60.05	1.488	2.850	-0.0041	117	60.00	0.861	58.69	2.301
S-36	system-7	25Y72HR	60.07	1.709	3.030	0.0023	118	60.00	2.490	60.00	2.625
S-37	system-7	25Y72HR	60.07	1.766	2.560	0.0009	120	60.00	1.906	60.02	1.870
S-38	system-7	25Y72HR	60.07	1.773	2.560	0.0009	115	60.00	0.861	60.01	0.819

LINK MAXIMUM CONDITION REPORT

South Roosevelt Blvd.
Link Maximum Conditions Report

Name	Group	Simulation	Max Time Flow hrs	Max Flow cfs	Max Delta Q cfs	Max Time US Stage hrs	Max US Stage ft	Max Time DS Stage hrs	Max DS Stage ft
DS-01	BASE	10Y1HR	0.57	1.706	-0.041	0.80	1.454	0.80	1.436
DS-02	system-1	10Y1HR	0.48	1.333	-0.049	0.80	1.466	0.80	1.449
DS-03	system-2	10Y1HR	0.68	0.936	-0.278	0.74	1.487	0.74	1.481
DS-04	system-2	10Y1HR	0.52	1.109	0.151	0.75	1.427	0.75	1.414
DS-05	system-2	10Y1HR	0.54	1.561	0.022	0.75	1.399	0.75	1.380
DS-06	system-3	10Y1HR	0.56	0.948	-0.320	0.77	2.087	0.77	2.078
DS-07	system-3	10Y1HR	0.74	1.546	-0.026	0.77	2.084	0.78	2.039
DS-08	system-4	10Y1HR	0.64	0.870	-0.299	0.75	1.621	0.74	1.617
DS-09	system-4	10Y1HR	0.43	1.561	-0.055	0.74	1.603	0.75	1.585
DS-10	system-4	10Y1HR	0.52	1.642	0.035	0.74	1.574	0.74	1.562
DS-11	system-4	10Y1HR	0.65	0.864	0.338	0.75	1.595	0.75	1.589
DS-12	system-5	10Y1HR	0.43	1.465	-0.051	0.75	1.714	0.75	1.691
DS-13	system-5	10Y1HR	0.62	0.982	-0.322	0.75	1.712	0.75	1.706
DS-14	system-6	10Y1HR	0.65	0.419	-0.432	0.72	1.332	0.72	1.333
DS-15	system-6	10Y1HR	0.64	0.624	0.154	0.72	1.308	0.72	1.302
DS-16	BASE	10Y1HR	0.62	0.729	0.309	0.76	1.503	0.76	1.497
RC-01	system-1	10Y1HR	0.80	1.924	0.012	0.80	1.436	0.00	-0.540
RC-02	system-2	10Y1HR	0.74	2.010	0.016	0.74	1.481	0.00	-0.540
RC-03	system-2	10Y1HR	0.75	1.883	0.015	0.75	1.414	0.00	-0.540
RC-04	system-2	10Y1HR	0.75	1.819	0.010	0.75	1.380	0.00	-0.540
RC-05	system-3	10Y1HR	0.77	3.141	0.016	0.77	2.078	0.00	-0.540
RC-06	system-4	10Y1HR	0.74	2.269	0.015	0.74	1.617	0.00	-0.540
RC-07	system-4	10Y1HR	0.74	2.163	0.015	0.74	1.562	0.00	-0.540
RC-08	system-4	10Y1HR	0.75	2.215	0.016	0.75	1.589	0.00	-0.540
RC-09	system-5	10Y1HR	0.75	2.437	0.015	0.75	1.706	0.00	-0.540
RC-10	system-6	10Y1HR	0.72	1.728	0.012	0.72	1.333	0.00	-0.540
RC-11	system-6	10Y1HR	0.72	1.670	0.014	0.72	1.302	0.00	-0.540
RC-12	system-7	10Y1HR	0.76	2.039	0.013	0.76	1.497	0.00	-0.540
RCE-01	system-1	10Y1HR	0.80	0.970	0.004	0.80	1.449	0.00	-0.540
RCE-02	system-3	10Y1HR	0.78	1.534	0.001	0.78	2.039	0.00	-0.540
RCE-03	system-4	10Y1HR	0.75	1.100	0.002	0.75	1.585	0.00	-0.540
RCE-04	system-5	10Y1HR	0.75	1.202	0.005	0.75	1.691	0.00	-0.540
RCE-05	system-6	10Y1HR	0.72	0.849	0.001	0.72	1.321	0.00	-0.540
S1-P1	system-1	10Y1HR	0.23	0.574	0.411	0.78	1.542	0.78	1.540
S1-P10	system-1	10Y1HR	0.57	1.783	0.906	0.79	1.468	0.80	1.454
S1-P2	system-1	10Y1HR	0.68	1.371	-0.246	0.78	1.540	0.79	1.516
S1-P3	system-1	10Y1HR	0.70	1.845	0.303	0.79	1.516	0.79	1.477
S1-P4	system-1	10Y1HR	0.39	0.866	1.168	0.79	1.477	0.79	1.477
S1-P5	system-1	10Y1HR	0.05	0.491	0.439	0.79	1.473	0.79	1.477
S1-P6	system-1	10Y1HR	1.04	2.506	-1.164	0.79	1.477	0.79	1.468
S1-P7	system-1	10Y1HR	0.49	1.449	0.703	0.79	1.473	0.80	1.466
S1-P8	system-1	10Y1HR	0.86	0.639	-0.444	0.79	1.473	0.79	1.473
S2-P1	system-2	10Y1HR	0.68	0.537	-0.602	0.74	1.532	0.74	1.529
S2-P10	system-2	10Y1HR	0.34	1.552	-1.773	0.75	1.435	0.75	1.427
S2-P11	system-2	10Y1HR	0.41	3.492	1.636	0.75	1.421	0.75	1.413
S2-P12	system-2	10Y1HR	0.54	1.644	-1.496	0.75	1.413	0.75	1.399

Name	Group	Simulation	Max Time Flow hrs	Max Flow cfs	Max Delta Q cfs	Max Time US Stage hrs	Max US Stage ft	Max Time DS Stage hrs	Max DS Stage ft
S2-P2	system-2	10Y1HR	0.68	1.381	-0.590	0.74	1.529	0.74	1.500
S2-P3	system-2	10Y1HR	0.64	0.728	0.655	0.75	1.446	0.75	1.442
S2-P4	system-2	10Y1HR	0.68	1.374	1.053	0.74	1.516	0.74	1.500
S2-P5	system-2	10Y1HR	1.50	0.715	-0.558	0.75	1.442	0.74	1.500
S2-P6a	system-2	10Y1HR	1.17	0.712	0.761	0.75	1.442	0.75	1.442
S2-P6b	system-2	10Y1HR	0.70	1.256	0.733	0.75	1.442	0.75	1.421
S2-P7	system-2	10Y1HR	0.68	2.401	1.790	0.74	1.500	0.74	1.489
S2-P8	system-2	10Y1HR	0.35	2.783	2.526	0.75	1.442	0.75	1.435
S2-P9	system-2	10Y1HR	0.46	2.618	2.618	0.74	1.489	0.74	1.487
S3-P1	system-3	10Y1HR	0.76	0.479	-0.370	0.77	2.158	0.77	2.155
S3-P2	system-3	10Y1HR	0.74	1.271	0.511	0.77	2.155	0.77	2.121
S3-P3	system-3	10Y1HR	0.74	1.233	-0.711	0.77	2.137	0.77	2.121
S3-P4	system-3	10Y1HR	0.00	0.000	-0.599	0.77	2.102	0.77	2.121
S3-P5	system-3	10Y1HR	0.72	3.201	1.682	0.77	2.121	0.77	2.097
S3-P6	system-3	10Y1HR	0.69	1.591	-0.525	0.77	2.102	0.77	2.084
S3-P7	system-2	10Y1HR	0.43	2.397	-2.397	0.77	2.097	0.77	2.087
S3-P8	system-3	10Y1HR	0.76	0.491	0.362	0.77	2.141	0.77	2.137
S4-P1	system-4	10Y1HR	0.65	0.454	-0.403	0.74	1.675	0.74	1.672
S4-P10	system-4	10Y1HR	0.65	0.761	0.683	0.74	1.619	0.74	1.612
S4-P11	system-4	10Y1HR	0.65	2.714	1.596	0.74	1.612	0.74	1.601
S4-P12	system-4	10Y1HR	0.45	1.916	1.916	0.74	1.630	0.75	1.621
S4-P13	system-4	10Y1HR	0.41	3.420	-1.970	0.74	1.599	0.74	1.588
S4-P14	system-4	10Y1HR	0.52	1.718	1.613	0.74	1.588	0.74	1.574
S4-P15	system-4	10Y1HR	0.45	3.431	3.431	0.74	1.601	0.75	1.595
S4-P2	system-4	10Y1HR	0.64	1.352	0.580	0.74	1.672	0.74	1.643
S4-P3	system-4	10Y1HR	0.64	1.078	0.744	0.74	1.653	0.74	1.643
S4-P4	system-4	10Y1HR	0.22	0.490	0.450	0.74	1.613	0.74	1.643
S4-P5	system-4	10Y1HR	0.64	2.757	1.452	0.74	1.643	0.74	1.630
S4-P6	system-4	10Y1HR	0.43	1.729	-0.575	0.74	1.613	0.74	1.603
S4-P7	system-4	10Y1HR	0.43	0.657	-0.522	0.74	1.599	0.74	1.613
S4-P8	system-4	10Y1HR	0.36	0.372	-0.549	0.74	1.599	0.74	1.612
S4-P9	system-4	10Y1HR	0.65	1.326	0.788	0.74	1.628	0.74	1.612
S5-P1	system-5	10Y1HR	0.00	0.000	-0.246	0.75	1.726	0.75	1.732
S5-P2	system-5	10Y1HR	0.62	1.236	-0.745	0.75	1.748	0.75	1.732
S5-P3	system-5	10Y1HR	0.62	0.673	0.566	0.75	1.739	0.75	1.732
S5-P4	system-5	10Y1HR	0.43	1.576	0.625	0.75	1.726	0.75	1.714
S5-P5	system-5	10Y1HR	0.62	2.687	1.297	0.75	1.732	0.75	1.718
S5-P6	system-5	10Y1HR	0.45	1.808	1.808	0.75	1.718	0.75	1.712
S6-P1	system-6	10Y1HR	0.65	0.933	-0.473	0.72	1.377	0.72	1.363
S6-P2	system-6	10Y1HR	0.65	1.469	-0.615	0.71	1.384	0.72	1.363
S6-P3	system-6	10Y1HR	0.05	0.534	-0.733	0.72	1.349	0.72	1.363
S6-P4	system-6	10Y1HR	0.65	2.909	-0.960	0.72	1.363	0.72	1.345
S6-P5	system-6	10Y1HR	0.64	1.799	-1.185	0.72	1.349	0.72	1.326
S6-P6	system-6	10Y1HR	0.46	2.537	2.537	0.72	1.326	0.72	1.308
S6-P7	system-6	10Y1HR	0.46	1.334	-0.892	0.72	1.345	0.72	1.332
S6-P8	system-6	10Y1HR	0.71	1.249	-0.786	0.72	1.332	0.72	1.321

South Roosevelt Blvd.
Link Maximum Conditions Report

Name	Group	Simulation	Max Time Flow hrs	Max Flow cfs	Max Delta Q cfs	Max Time US Stage hrs	Max US Stage ft	Max Time DS Stage hrs	Max DS Stage ft
S7-P1	system-7	10Y1HR	0.68	1.611	-0.296	0.75	1.556	0.76	1.516
S7-P2	system-7	10Y1HR	0.69	0.702	0.193	0.75	1.562	0.75	1.556
S7-P3	system-7	10Y1HR	0.31	2.654	-1.405	0.76	1.516	0.76	1.509
S7-P4	system-7	10Y1HR	0.71	1.101	1.601	0.76	1.509	0.76	1.503
W-01	system-1	10Y1HR	0.77	0.940	0.033	0.79	1.468	0.80	1.436
W-02	system-2	10Y1HR	0.68	2.340	1.332	0.74	1.489	0.74	1.481
W-03	system-2	10Y1HR	0.70	1.158	-0.180	0.75	1.435	0.75	1.414
W-04	system-2	10Y1HR	0.74	0.806	-0.006	0.75	1.413	0.75	1.380
W-05	system-3	10Y1HR	0.56	3.008	1.862	0.77	2.097	0.77	2.078
W-06	system-4	10Y1HR	0.64	3.098	1.882	0.74	1.630	0.74	1.617
W-07	system-4	10Y1HR	0.72	1.392	-0.012	0.74	1.588	0.74	1.562
W-08	system-4	10Y1HR	0.65	2.616	1.423	0.74	1.601	0.75	1.589
W-09	system-5	10Y1HR	0.62	2.978	1.855	0.75	1.718	0.75	1.706
W-10	system-6	10Y1HR	0.65	2.660	1.437	0.72	1.345	0.72	1.333
W-11	system-6	10Y1HR	0.69	1.362	-0.117	0.72	1.326	0.72	1.302
W-12	system-7	10Y1HR	0.62	2.780	1.800	0.76	1.509	0.76	1.497
DS-01	BASE	10Y24HR	12.00	0.351	-0.000	12.00	0.801	12.01	0.606
DS-02	system-1	10Y24HR	12.00	0.340	-0.018	12.00	0.801	12.00	0.796
DS-03	system-2	10Y24HR	12.00	0.196	0.001	12.00	0.782	12.00	0.772
DS-04	system-2	10Y24HR	12.00	0.243	-0.000	12.00	0.781	12.01	0.619
DS-05	system-2	10Y24HR	12.00	0.249	-0.000	12.00	0.782	12.01	0.548
DS-06	system-3	10Y24HR	12.00	0.291	0.018	12.00	0.818	12.00	0.807
DS-07	system-3	10Y24HR	12.00	0.380	-0.025	12.01	0.818	12.00	0.813
DS-08	system-4	10Y24HR	12.00	0.162	-0.000	12.00	0.765	12.00	0.752
DS-09	system-4	10Y24HR	12.03	0.314	0.032	12.00	0.767	12.00	0.762
DS-10	system-4	10Y24HR	12.00	0.168	-0.000	12.00	0.766	12.01	0.508
DS-11	system-4	10Y24HR	12.00	0.165	-0.000	12.00	0.766	12.00	0.751
DS-12	system-5	10Y24HR	12.00	0.300	-0.013	12.00	0.727	12.00	0.722
DS-13	system-5	10Y24HR	12.00	0.028	-0.000	12.00	0.727	12.01	0.705
DS-14	system-6	10Y24HR	0.00	0.000	0.000	12.00	0.675	12.00	0.667
DS-15	system-6	10Y24HR	0.00	0.000	0.000	12.00	0.680	12.01	0.533
DS-16	BASE	10Y24HR	0.00	0.000	0.000	12.00	0.677	12.01	0.666
RC-01	system-1	10Y24HR	12.01	0.355	0.001	12.01	0.606	0.00	-0.540
RC-02	system-2	10Y24HR	12.00	0.666	0.002	12.00	0.772	0.00	-0.540
RC-03	system-2	10Y24HR	12.01	0.379	0.001	12.01	0.619	0.00	-0.540
RC-04	system-2	10Y24HR	12.01	0.246	0.001	12.01	0.548	0.00	-0.540
RC-05	system-3	10Y24HR	12.00	0.733	0.002	12.00	0.807	0.00	-0.540
RC-06	system-4	10Y24HR	12.00	0.629	0.001	12.00	0.752	0.00	-0.540
RC-07	system-4	10Y24HR	12.01	0.171	0.001	12.01	0.508	0.00	-0.540
RC-08	system-4	10Y24HR	12.00	0.627	0.002	12.00	0.751	0.00	-0.540
RC-09	system-5	10Y24HR	12.01	0.541	0.001	12.01	0.705	0.00	-0.540
RC-10	system-6	10Y24HR	12.00	0.469	0.000	12.00	0.667	0.00	-0.540
RC-11	system-6	10Y24HR	12.01	0.217	0.001	12.01	0.533	0.00	-0.540
RC-12	system-7	10Y24HR	12.01	0.467	0.000	12.01	0.666	0.00	-0.540
RCE-01	system-1	10Y24HR	12.00	0.356	0.000	12.00	0.796	0.00	-0.540
RCE-02	system-3	10Y24HR	12.00	0.371	-0.000	12.00	0.813	0.00	-0.540

Name	Group	Simulation	Max Time Flow hrs	Max Flow cfs	Max Delta Q cfs	Max Time US Stage hrs	Max US Stage ft	Max Time DS Stage hrs	Max DS Stage ft
RCE-03	system-4	10Y24HR	12.00	0.324	0.000	12.00	0.762	0.00	-0.540
RCE-04	system-5	10Y24HR	12.00	0.286	0.000	12.00	0.722	0.00	-0.540
RCE-05	system-6	10Y24HR	12.00	0.242	0.000	12.00	0.675	0.00	-0.540
S1-P1	system-1	10Y24HR	1.19	0.567	0.411	12.00	0.812	12.00	0.811
S1-P10	system-1	10Y24HR	21.79	0.932	0.085	12.00	0.806	12.00	0.801
S1-P2	system-1	10Y24HR	12.00	0.240	-0.246	12.00	0.811	12.00	0.810
S1-P3	system-1	10Y24HR	13.14	0.732	0.267	12.00	0.810	12.00	0.804
S1-P4	system-1	10Y24HR	2.51	0.950	0.420	12.00	0.808	12.00	0.804
S1-P5	system-1	10Y24HR	2.51	0.570	0.261	12.00	0.804	12.00	0.804
S1-P6	system-1	10Y24HR	0.00	0.000	-0.767	12.00	0.804	12.00	0.806
S1-P7	system-1	10Y24HR	2.95	1.012	0.337	12.00	0.804	12.00	0.801
S1-P8	system-1	10Y24HR	0.00	0.000	-0.264	12.00	0.803	12.00	0.804
S2-P1	system-2	10Y24HR	3.66	0.207	0.506	12.00	0.791	12.00	0.791
S2-P10	system-2	10Y24HR	24.26	0.008	-1.083	12.00	0.780	12.00	0.781
S2-P11	system-2	10Y24HR	2.66	2.502	-0.883	12.00	0.787	12.00	0.781
S2-P12	system-2	10Y24HR	24.24	0.007	1.055	12.00	0.781	12.00	0.782
S2-P2	system-2	10Y24HR	12.33	0.607	0.294	12.00	0.791	12.00	0.786
S2-P3	system-2	10Y24HR	12.00	0.530	0.183	12.00	0.788	12.00	0.785
S2-P4	system-2	10Y24HR	12.00	0.721	-0.360	12.00	0.791	12.00	0.786
S2-P5	system-2	10Y24HR	19.19	0.691	0.329	12.00	0.787	12.00	0.786
S2-P6a	system-2	10Y24HR	0.00	0.000	0.224	12.00	0.785	12.00	0.787
S2-P6b	system-2	10Y24HR	0.00	0.000	0.259	12.00	0.785	12.00	0.787
S2-P7	system-2	10Y24HR	3.66	0.560	1.532	12.00	0.786	12.00	0.786
S2-P8	system-2	10Y24HR	2.19	2.726	1.042	12.00	0.787	12.00	0.780
S2-P9	system-2	10Y24HR	3.54	2.945	2.945	12.00	0.786	12.00	0.782
S3-P1	system-3	10Y24HR	5.94	0.353	-0.303	12.01	0.824	12.01	0.823
S3-P2	system-3	10Y24HR	11.25	0.512	0.576	12.01	0.823	12.01	0.823
S3-P3	system-3	10Y24HR	11.18	0.697	0.817	12.01	0.823	12.01	0.823
S3-P4	system-3	10Y24HR	11.18	0.261	-0.601	12.01	0.819	12.01	0.823
S3-P5	system-3	10Y24HR	5.94	2.234	1.687	12.01	0.823	12.01	0.819
S3-P6	system-3	10Y24HR	11.18	0.471	-0.443	12.01	0.819	12.01	0.818
S3-P7	system-2	10Y24HR	1.88	1.666	-2.048	12.01	0.819	12.00	0.818
S3-P8	system-3	10Y24HR	8.16	0.372	-0.329	12.01	0.824	12.01	0.823
S4-P1	system-4	10Y24HR	8.15	0.240	0.507	12.00	0.774	12.00	0.774
S4-P10	system-4	10Y24HR	8.15	0.302	0.682	12.00	0.771	12.00	0.772
S4-P11	system-4	10Y24HR	5.63	2.276	-1.113	12.00	0.772	12.00	0.764
S4-P12	system-4	10Y24HR	5.62	3.020	3.020	12.00	0.769	12.00	0.765
S4-P13	system-4	10Y24HR	1.93	0.652	-1.739	12.00	0.766	12.00	0.770
S4-P14	system-4	10Y24HR	5.56	3.030	3.030	12.00	0.770	12.00	0.766
S4-P15	system-4	10Y24HR	1.93	1.451	-1.776	12.00	0.764	12.00	0.766
S4-P2	system-4	10Y24HR	8.15	0.622	0.267	12.00	0.774	12.00	0.768
S4-P3	system-4	10Y24HR	5.62	0.710	0.311	12.00	0.773	12.00	0.768
S4-P4	system-4	10Y24HR	1.20	0.541	0.304	12.00	0.769	12.00	0.768
S4-P5	system-4	10Y24HR	8.15	0.607	1.579	12.00	0.768	12.00	0.769
S4-P6	system-4	10Y24HR	1.20	0.821	0.594	12.00	0.769	12.00	0.767
S4-P7	system-4	10Y24HR	0.00	0.000	-0.164	12.00	0.766	12.00	0.769

South Roosevelt Blvd.
Link Maximum Conditions Report

Name	Group	Simulation	Max Time Flow hrs	Max Flow cfs	Max Delta Q cfs	Max Time US Stage hrs	Max US Stage ft	Max Time DS Stage hrs	Max DS Stage ft
S4-P8	system-4	10Y24HR	0.00	0.000	0.267	12.00	0.766	12.00	0.772
S4-P9	system-4	10Y24HR	8.15	0.409	0.825	12.00	0.772	12.00	0.772
S5-P1	system-5	10Y24HR	0.00	0.000	0.275	12.00	0.727	12.00	0.732
S5-P2	system-5	10Y24HR	8.45	0.453	0.817	12.00	0.732	12.00	0.732
S5-P3	system-5	10Y24HR	8.45	0.337	0.683	12.00	0.731	12.00	0.732
S5-P4	system-5	10Y24HR	12.13	0.142	-0.317	12.00	0.727	12.00	0.727
S5-P5	system-5	10Y24HR	1.19	2.498	1.297	12.00	0.732	12.00	0.724
S5-P6	system-5	10Y24HR	1.99	1.675	-2.051	12.00	0.724	12.00	0.727
S6-P1	system-6	10Y24HR	8.38	0.531	0.305	12.00	0.685	12.00	0.680
S6-P2	system-6	10Y24HR	11.08	0.720	0.496	12.00	0.686	12.00	0.680
S6-P3	system-6	10Y24HR	15.49	0.638	0.394	12.00	0.683	12.00	0.680
S6-P4	system-6	10Y24HR	0.00	0.000	-0.884	12.00	0.680	12.00	0.681
S6-P5	system-6	10Y24HR	8.26	1.673	-1.480	12.00	0.683	12.00	0.679
S6-P6	system-6	10Y24HR	2.02	1.612	-1.995	12.00	0.679	12.00	0.680
S6-P7	system-6	10Y24HR	15.49	1.183	0.105	12.00	0.681	12.00	0.675
S6-P8	system-6	10Y24HR	1.45	0.010	-0.216	12.00	0.675	12.00	0.675
S7-P1	system-7	10Y24HR	1.80	0.621	0.328	12.00	0.682	12.00	0.678
S7-P2	system-7	10Y24HR	12.00	0.063	-0.298	12.00	0.682	12.00	0.682
S7-P3	system-7	10Y24HR	0.00	0.000	-1.306	12.00	0.678	12.00	0.679
S7-P4	system-7	10Y24HR	13.14	0.874	0.135	12.00	0.679	12.00	0.677
W-01	system-1	10Y24HR	0.00	0.000	0.000	12.00	0.806	12.01	0.606
W-02	system-2	10Y24HR	8.23	0.586	-0.063	12.00	0.786	12.00	0.772
W-03	system-2	10Y24HR	12.00	0.131	-0.000	12.00	0.780	12.01	0.619
W-04	system-2	10Y24HR	0.00	0.000	0.000	12.00	0.781	12.01	0.548
W-05	system-3	10Y24HR	11.18	0.541	-0.084	12.01	0.819	12.00	0.807
W-06	system-4	10Y24HR	11.11	0.558	-0.029	12.00	0.769	12.00	0.752
W-07	system-4	10Y24HR	0.00	0.000	0.000	12.00	0.770	12.01	0.508
W-08	system-4	10Y24HR	10.58	0.475	-0.049	12.00	0.764	12.00	0.751
W-09	system-5	10Y24HR	11.59	0.477	-0.041	12.00	0.724	12.01	0.705
W-10	system-6	10Y24HR	12.00	0.554	-0.006	12.00	0.681	12.00	0.667
W-11	system-6	10Y24HR	12.00	0.211	-0.000	12.00	0.679	12.01	0.533
W-12	system-7	10Y24HR	12.00	0.542	0.001	12.00	0.679	12.01	0.666
DS-01	BASE	10Y8HR	4.00	1.214	0.059	4.02	1.090	4.02	1.059
DS-02	system-1	10Y8HR	4.00	0.642	-0.076	4.02	1.101	4.02	1.091
DS-03	system-2	10Y8HR	4.00	0.501	0.063	4.00	1.049	4.00	1.039
DS-04	system-2	10Y8HR	4.11	0.632	0.084	4.01	1.029	4.01	1.016
DS-05	system-2	10Y8HR	4.00	1.071	-0.014	4.01	1.015	4.01	0.986
DS-06	system-3	10Y8HR	4.01	0.731	0.014	4.01	1.445	4.01	1.433
DS-07	system-3	10Y8HR	4.00	0.950	-0.029	4.01	1.446	4.01	1.426
DS-08	system-4	10Y8HR	4.01	0.521	-0.050	4.01	1.130	4.01	1.120
DS-09	system-4	10Y8HR	4.00	0.658	-0.055	4.01	1.125	4.01	1.116
DS-10	system-4	10Y8HR	3.25	0.830	0.029	4.01	1.113	4.01	1.098
DS-11	system-4	10Y8HR	4.01	0.513	0.054	4.01	1.119	4.01	1.109
DS-12	system-5	10Y8HR	4.00	0.721	-0.018	4.01	1.194	4.01	1.183
DS-13	system-5	10Y8HR	4.00	0.607	0.027	4.01	1.192	4.01	1.181
DS-14	system-6	10Y8HR	4.05	0.244	0.036	4.00	0.942	4.00	0.937

South Roosevelt Blvd.
Link Maximum Conditions Report

Name	Group	Simulation	Max Time Flow hrs	Max Flow cfs	Max Delta Q cfs	Max Time US Stage hrs	Max US Stage ft	Max Time DS Stage hrs	Max DS Stage ft
DS-15	system-6	10Y8HR	4.02	0.393	0.005	4.01	0.936	4.01	0.927
DS-16	BASE	10Y8HR	4.00	0.490	0.034	4.01	1.074	4.01	1.065
RC-01	system-1	10Y8HR	4.02	1.207	0.002	4.02	1.059	0.00	-0.540
RC-02	system-2	10Y8HR	4.00	1.171	0.005	4.00	1.039	0.00	-0.540
RC-03	system-2	10Y8HR	4.01	1.126	0.002	4.01	1.016	0.00	-0.540
RC-04	system-2	10Y8HR	4.01	1.069	0.002	4.01	0.986	0.00	-0.540
RC-05	system-3	10Y8HR	4.01	1.920	0.004	4.01	1.433	0.00	-0.540
RC-06	system-4	10Y8HR	4.01	1.325	0.003	4.01	1.120	0.00	-0.540
RC-07	system-4	10Y8HR	4.01	1.282	0.001	4.01	1.098	0.00	-0.540
RC-08	system-4	10Y8HR	4.01	1.304	0.004	4.01	1.109	0.00	-0.540
RC-09	system-5	10Y8HR	4.01	1.440	0.003	4.01	1.181	0.00	-0.540
RC-10	system-6	10Y8HR	4.00	0.977	-0.000	4.00	0.937	0.00	-0.540
RC-11	system-6	10Y8HR	4.01	0.959	0.001	4.01	0.927	0.00	-0.540
RC-12	system-7	10Y8HR	4.01	1.219	0.000	4.01	1.065	0.00	-0.540
RCE-01	system-1	10Y8HR	4.02	0.634	-0.000	4.02	1.091	0.00	-0.540
RCE-02	system-3	10Y8HR	4.01	0.948	0.000	4.01	1.426	0.00	-0.540
RCE-03	system-4	10Y8HR	4.01	0.657	0.000	4.01	1.116	0.00	-0.540
RCE-04	system-5	10Y8HR	4.01	0.719	0.000	4.01	1.183	0.00	-0.540
RCE-05	system-6	10Y8HR	4.01	0.490	0.002	4.01	0.939	0.00	-0.540
S1-P1	system-1	10Y8HR	1.10	0.567	0.411	4.01	1.132	4.01	1.131
S1-P10	system-1	10Y8HR	3.14	4.088	-4.721	4.01	1.104	4.02	1.090
S1-P2	system-1	10Y8HR	4.00	0.825	-0.246	4.01	1.131	4.01	1.122
S1-P3	system-1	10Y8HR	4.00	1.165	0.407	4.01	1.122	4.01	1.106
S1-P4	system-1	10Y8HR	1.61	0.946	1.084	4.02	1.108	4.01	1.106
S1-P5	system-1	10Y8HR	12.00	0.552	-0.598	4.01	1.105	4.01	1.106
S1-P6	system-1	10Y8HR	3.14	1.778	2.744	4.01	1.106	4.01	1.104
S1-P7	system-1	10Y8HR	1.81	1.033	0.337	4.01	1.105	4.02	1.101
S1-P8	system-1	10Y8HR	3.14	0.387	-0.497	4.02	1.104	4.01	1.105
S2-P1	system-2	10Y8HR	4.01	0.303	0.537	4.00	1.066	4.00	1.065
S2-P10	system-2	10Y8HR	1.43	1.531	-1.899	4.01	1.032	4.01	1.029
S2-P11	system-2	10Y8HR	1.68	2.544	1.611	4.01	1.028	4.01	1.025
S2-P12	system-2	10Y8HR	1.38	1.289	-1.594	4.01	1.025	4.01	1.015
S2-P2	system-2	10Y8HR	4.00	0.777	0.294	4.00	1.065	4.00	1.055
S2-P3	system-2	10Y8HR	3.14	0.625	0.613	4.01	1.037	4.01	1.035
S2-P4	system-2	10Y8HR	2.02	0.772	-0.521	4.00	1.061	4.00	1.055
S2-P5	system-2	10Y8HR	6.17	0.689	0.563	4.01	1.037	4.00	1.055
S2-P6a	system-2	10Y8HR	4.32	0.639	0.877	4.01	1.035	4.01	1.037
S2-P6b	system-2	10Y8HR	4.11	0.724	0.772	4.01	1.035	4.01	1.028
S2-P7	system-2	10Y8HR	4.30	1.668	1.819	4.00	1.055	4.00	1.052
S2-P8	system-2	10Y8HR	1.47	2.750	2.065	4.01	1.037	4.01	1.032
S2-P9	system-2	10Y8HR	2.02	3.412	3.412	4.00	1.052	4.00	1.049
S3-P1	system-3	10Y8HR	1.94	0.350	-0.309	4.01	1.474	4.01	1.473
S3-P2	system-3	10Y8HR	4.00	0.773	0.557	4.01	1.473	4.01	1.460
S3-P3	system-3	10Y8HR	4.00	0.750	0.797	4.01	1.466	4.01	1.460
S3-P4	system-3	10Y8HR	2.61	0.267	-0.587	4.01	1.453	4.01	1.460
S3-P5	system-3	10Y8HR	1.91	2.190	1.655	4.01	1.460	4.01	1.451

Name	Group	Simulation	Max Time Flow hrs	Max Flow cfs	Max Delta Q cfs	Max Time US Stage hrs	Max US Stage ft	Max Time DS Stage hrs	Max DS Stage ft
S3-P6	system-3	10Y8HR	4.00	0.953	-0.400	4.01	1.453	4.01	1.446
S3-P7	system-2	10Y8HR	1.35	1.667	-2.028	4.01	1.451	4.01	1.445
S3-P8	system-3	10Y8HR	5.19	0.370	-0.285	4.01	1.468	4.01	1.466
S4-P1	system-4	10Y8HR	1.96	0.373	-0.393	4.00	1.151	4.00	1.150
S4-P10	system-4	10Y8HR	3.14	0.618	0.570	4.01	1.131	4.01	1.128
S4-P11	system-4	10Y8HR	4.35	1.922	-1.801	4.01	1.128	4.01	1.124
S4-P12	system-4	10Y8HR	1.38	1.524	-1.888	4.01	1.135	4.01	1.130
S4-P13	system-4	10Y8HR	1.80	2.611	1.870	4.01	1.124	4.01	1.120
S4-P14	system-4	10Y8HR	1.37	1.435	-1.599	4.01	1.120	4.01	1.113
S4-P15	system-4	10Y8HR	1.93	2.774	2.774	4.01	1.124	4.01	1.119
S4-P2	system-4	10Y8HR	4.00	0.769	0.645	4.00	1.150	4.01	1.140
S4-P3	system-4	10Y8HR	4.71	0.688	0.812	4.00	1.143	4.01	1.140
S4-P4	system-4	10Y8HR	11.99	0.485	-0.412	4.01	1.129	4.01	1.140
S4-P5	system-4	10Y8HR	1.93	2.227	-1.205	4.01	1.140	4.01	1.135
S4-P6	system-4	10Y8HR	4.00	0.660	-0.515	4.01	1.129	4.01	1.125
S4-P7	system-4	10Y8HR	1.72	0.552	-0.387	4.01	1.124	4.01	1.129
S4-P8	system-4	10Y8HR	1.49	0.641	0.379	4.01	1.124	4.01	1.128
S4-P9	system-4	10Y8HR	3.14	0.825	-0.710	4.00	1.134	4.01	1.128
S5-P1	system-5	10Y8HR	3.15	0.302	0.385	4.01	1.198	4.01	1.201
S5-P2	system-5	10Y8HR	3.16	0.722	0.803	4.01	1.206	4.01	1.201
S5-P3	system-5	10Y8HR	3.16	0.524	0.674	4.01	1.203	4.01	1.201
S5-P4	system-5	10Y8HR	4.00	0.723	-0.317	4.01	1.198	4.01	1.194
S5-P5	system-5	10Y8HR	1.03	2.499	1.297	4.01	1.201	4.01	1.195
S5-P6	system-5	10Y8HR	1.39	1.678	-2.025	4.01	1.195	4.01	1.192
S6-P1	system-6	10Y8HR	1.43	0.538	-0.485	4.00	0.960	4.00	0.955
S6-P2	system-6	10Y8HR	4.00	0.789	-0.649	4.00	0.962	4.00	0.955
S6-P3	system-6	10Y8HR	5.47	0.644	0.394	4.00	0.951	4.00	0.955
S6-P4	system-6	10Y8HR	3.12	1.935	-1.300	4.00	0.955	4.00	0.950
S6-P5	system-6	10Y8HR	2.01	1.647	-1.413	4.00	0.951	4.00	0.944
S6-P6	system-6	10Y8HR	1.39	1.558	-1.912	4.00	0.944	4.01	0.936
S6-P7	system-6	10Y8HR	5.47	1.178	0.908	4.00	0.950	4.00	0.942
S6-P8	system-6	10Y8HR	3.20	0.670	-0.897	4.00	0.942	4.01	0.939
S7-P1	system-7	10Y8HR	4.00	0.926	0.328	4.01	1.095	4.01	1.080
S7-P2	system-7	10Y8HR	4.00	0.409	-0.298	4.00	1.097	4.01	1.095
S7-P3	system-7	10Y8HR	3.21	1.771	-1.306	4.01	1.080	4.01	1.076
S7-P4	system-7	10Y8HR	2.06	0.863	1.063	4.01	1.076	4.01	1.074
W-01	system-1	10Y8HR	0.00	0.000	0.000	4.01	1.104	4.02	1.059
W-02	system-2	10Y8HR	4.00	0.679	-0.086	4.00	1.052	4.00	1.039
W-03	system-2	10Y8HR	4.00	0.522	0.135	4.01	1.032	4.01	1.016
W-04	system-2	10Y8HR	0.00	0.000	0.000	4.01	1.025	4.01	0.986
W-05	system-3	10Y8HR	3.99	1.202	-0.073	4.01	1.451	4.01	1.433
W-06	system-4	10Y8HR	4.00	0.805	0.076	4.01	1.135	4.01	1.120
W-07	system-4	10Y8HR	4.00	0.545	-0.007	4.01	1.120	4.01	1.098
W-08	system-4	10Y8HR	4.00	0.792	0.097	4.01	1.124	4.01	1.109
W-09	system-5	10Y8HR	4.00	0.834	0.076	4.01	1.195	4.01	1.181
W-10	system-6	10Y8HR	4.00	0.736	-0.078	4.00	0.950	4.00	0.937

South Roosevelt Blvd.
Link Maximum Conditions Report

Name	Group	Simulation	Max Time Flow hrs	Max Flow cfs	Max Delta Q cfs	Max Time US Stage hrs	Max US Stage ft	Max Time DS Stage hrs	Max DS Stage ft
W-11	system-6	10Y8HR	4.00	0.567	-0.009	4.00	0.944	4.01	0.927
W-12	system-7	10Y8HR	4.00	0.730	0.138	4.01	1.076	4.01	1.065
DS-01	BASE	25Y72HR	59.75	1.337	0.063	60.09	1.677	60.09	1.662
DS-02	system-1	25Y72HR	60.06	1.186	-0.045	60.09	1.691	60.09	1.670
DS-03	system-2	25Y72HR	59.88	0.937	-0.327	60.06	1.667	60.06	1.661
DS-04	system-2	25Y72HR	60.17	0.917	0.154	60.07	1.589	60.07	1.576
DS-05	system-2	25Y72HR	59.77	1.325	0.020	60.07	1.554	60.07	1.538
DS-06	system-3	25Y72HR	59.75	0.950	-0.322	60.13	2.548	60.13	2.539
DS-07	system-3	25Y72HR	59.99	1.713	-0.020	60.13	2.543	60.14	2.495
DS-08	system-4	25Y72HR	59.85	0.869	0.331	60.07	1.819	60.06	1.815
DS-09	system-4	25Y72HR	60.03	1.293	-0.053	60.07	1.797	60.07	1.775
DS-10	system-4	25Y72HR	59.64	1.030	-0.162	60.07	1.759	60.07	1.748
DS-11	system-4	25Y72HR	59.86	0.864	0.352	60.06	1.783	60.06	1.777
DS-12	system-5	25Y72HR	60.03	1.414	0.026	60.07	1.931	60.07	1.902
DS-13	system-5	25Y72HR	59.83	0.983	-0.322	60.07	1.927	60.07	1.920
DS-14	system-6	25Y72HR	59.87	0.415	-0.564	60.05	1.463	60.05	1.467
DS-15	system-6	25Y72HR	59.79	0.662	0.144	60.05	1.435	60.05	1.431
DS-16	BASE	25Y72HR	60.10	0.739	-0.323	60.07	1.693	60.07	1.684
RC-01	system-1	25Y72HR	60.09	2.352	0.001	60.09	1.662	0.00	-0.540
RC-02	system-2	25Y72HR	60.06	2.351	0.013	60.06	1.661	0.00	-0.540
RC-03	system-2	25Y72HR	60.07	2.189	-0.001	60.07	1.576	0.00	-0.540
RC-04	system-2	25Y72HR	60.07	2.117	0.002	60.07	1.538	0.00	-0.540
RC-05	system-3	25Y72HR	59.93	3.220	0.014	60.13	2.539	0.00	-0.540
RC-06	system-4	25Y72HR	60.06	2.645	0.014	60.06	1.815	0.00	-0.540
RC-07	system-4	25Y72HR	60.07	2.517	0.006	60.07	1.748	0.00	-0.540
RC-08	system-4	25Y72HR	60.06	2.572	0.014	60.06	1.777	0.00	-0.540
RC-09	system-5	25Y72HR	60.07	2.843	0.013	60.07	1.920	0.00	-0.540
RC-10	system-6	25Y72HR	60.05	1.983	0.013	60.05	1.467	0.00	-0.540
RC-11	system-6	25Y72HR	60.05	1.915	0.001	60.05	1.431	0.00	-0.540
RC-12	system-7	25Y72HR	60.07	2.396	0.013	60.07	1.684	0.00	-0.540
RCE-01	system-1	25Y72HR	60.09	1.179	0.001	60.09	1.670	0.00	-0.540
RCE-02	system-3	25Y72HR	59.95	1.610	-0.001	60.14	2.495	0.00	-0.540
RCE-03	system-4	25Y72HR	60.07	1.282	0.001	60.07	1.775	0.00	-0.540
RCE-04	system-5	25Y72HR	60.07	1.404	0.001	60.07	1.902	0.00	-0.540
RCE-05	system-6	25Y72HR	60.05	0.975	-0.002	60.05	1.455	0.00	-0.540
S1-P1	system-1	25Y72HR	2.02	0.565	0.411	60.08	1.804	60.08	1.801
S1-P10	system-1	25Y72HR	59.58	4.160	5.280	60.09	1.694	60.09	1.677
S1-P2	system-1	25Y72HR	60.01	1.638	-0.246	60.08	1.801	60.09	1.766
S1-P3	system-1	25Y72HR	60.01	2.148	0.393	60.09	1.766	60.09	1.708
S1-P4	system-1	25Y72HR	7.00	0.952	1.207	60.09	1.709	60.09	1.708
S1-P5	system-1	25Y72HR	7.00	0.589	-0.738	60.09	1.702	60.09	1.708
S1-P6	system-1	25Y72HR	60.47	2.592	2.808	60.09	1.708	60.09	1.694
S1-P7	system-1	25Y72HR	60.02	1.211	0.876	60.09	1.702	60.09	1.691
S1-P8	system-1	25Y72HR	60.27	0.744	0.531	60.09	1.703	60.09	1.702
S2-P1	system-2	25Y72HR	60.00	0.606	0.507	60.06	1.730	60.06	1.726
S2-P10	system-2	25Y72HR	60.19	1.245	-1.512	60.07	1.597	60.07	1.589

Name	Group	Simulation	Max Time Flow hrs	Max Flow cfs	Max Delta Q cfs	Max Time US Stage hrs	Max US Stage ft	Max Time DS Stage hrs	Max DS Stage ft
S2-P11	system-2	25Y72HR	8.51	2.472	1.356	60.07	1.581	60.07	1.570
S2-P12	system-2	25Y72HR	59.76	1.420	1.056	60.07	1.570	60.07	1.554
S2-P2	system-2	25Y72HR	60.00	1.561	-0.541	60.06	1.726	60.06	1.686
S2-P3	system-2	25Y72HR	60.00	0.835	0.652	60.06	1.614	60.07	1.608
S2-P4	system-2	25Y72HR	60.00	1.525	-0.711	60.06	1.709	60.06	1.686
S2-P5	system-2	25Y72HR	5.44	0.720	0.605	60.07	1.608	60.06	1.686
S2-P6a	system-2	25Y72HR	60.33	0.584	0.821	60.07	1.608	60.07	1.608
S2-P6b	system-2	25Y72HR	60.02	1.439	0.706	60.07	1.608	60.07	1.581
S2-P7	system-2	25Y72HR	60.00	2.505	1.547	60.06	1.686	60.06	1.672
S2-P8	system-2	25Y72HR	5.44	2.714	2.460	60.07	1.608	60.07	1.597
S2-P9	system-2	25Y72HR	54.66	3.020	3.020	60.06	1.672	60.06	1.667
S3-P1	system-3	25Y72HR	60.05	0.531	0.249	60.13	2.624	60.13	2.622
S3-P2	system-3	25Y72HR	60.04	1.435	0.577	60.13	2.622	60.13	2.584
S3-P3	system-3	25Y72HR	60.02	1.390	0.817	60.13	2.602	60.13	2.584
S3-P4	system-3	25Y72HR	59.52	0.229	-0.602	60.13	2.563	60.13	2.584
S3-P5	system-3	25Y72HR	59.98	3.533	1.694	60.13	2.584	60.13	2.559
S3-P6	system-3	25Y72HR	59.98	1.817	-0.411	60.13	2.563	60.13	2.543
S3-P7	system-2	25Y72HR	59.75	1.082	-1.086	60.13	2.559	60.13	2.548
S3-P8	system-3	25Y72HR	60.04	0.547	0.396	60.13	2.605	60.13	2.602
S4-P1	system-4	25Y72HR	60.01	0.526	0.507	60.06	1.893	60.06	1.890
S4-P10	system-4	25Y72HR	60.01	0.802	0.679	60.07	1.818	60.07	1.809
S4-P11	system-4	25Y72HR	60.01	2.757	-1.108	60.07	1.809	60.07	1.793
S4-P12	system-4	25Y72HR	57.76	3.031	3.031	60.06	1.833	60.07	1.819
S4-P13	system-4	25Y72HR	60.01	2.567	1.956	60.07	1.792	60.07	1.776
S4-P14	system-4	25Y72HR	57.72	3.041	3.041	60.07	1.776	60.07	1.759
S4-P15	system-4	25Y72HR	59.86	0.929	-1.106	60.07	1.793	60.06	1.783
S4-P2	system-4	25Y72HR	60.01	1.551	-0.476	60.06	1.890	60.06	1.850
S4-P3	system-4	25Y72HR	60.01	1.149	-0.503	60.06	1.864	60.06	1.850
S4-P4	system-4	25Y72HR	2.08	0.550	0.340	60.07	1.810	60.06	1.850
S4-P5	system-4	25Y72HR	60.00	2.825	1.569	60.06	1.850	60.06	1.833
S4-P6	system-4	25Y72HR	60.00	1.328	0.535	60.07	1.810	60.07	1.797
S4-P7	system-4	25Y72HR	0.00	0.000	0.161	60.07	1.792	60.07	1.810
S4-P8	system-4	25Y72HR	0.00	0.000	0.271	60.07	1.792	60.07	1.809
S4-P9	system-4	25Y72HR	60.01	1.447	0.822	60.07	1.830	60.07	1.809
S5-P1	system-5	25Y72HR	5.49	0.606	0.381	60.07	1.946	60.07	1.955
S5-P2	system-5	25Y72HR	60.00	1.415	-0.580	60.07	1.976	60.07	1.955
S5-P3	system-5	25Y72HR	60.03	0.759	0.513	60.07	1.965	60.07	1.955
S5-P4	system-5	25Y72HR	60.00	1.454	0.416	60.07	1.946	60.07	1.931
S5-P5	system-5	25Y72HR	60.00	2.901	1.573	60.07	1.955	60.07	1.936
S5-P6	system-5	25Y72HR	58.70	3.019	3.019	60.07	1.936	60.07	1.927
S6-P1	system-6	25Y72HR	60.00	1.023	-0.465	60.04	1.525	60.04	1.506
S6-P2	system-6	25Y72HR	60.00	1.628	-0.615	60.04	1.534	60.04	1.506
S6-P3	system-6	25Y72HR	61.65	0.641	0.394	60.05	1.488	60.04	1.506
S6-P4	system-6	25Y72HR	59.97	3.057	-1.192	60.04	1.506	60.05	1.484
S6-P5	system-6	25Y72HR	60.00	1.998	-1.479	60.05	1.488	60.05	1.459
S6-P6	system-6	25Y72HR	4.84	1.646	-2.038	60.05	1.459	60.05	1.435

South Roosevelt Blvd.
Link Maximum Conditions Report

Name	Group	Simulation	Max Time Flow hrs	Max Flow cfs	Max Delta Q cfs	Max Time US Stage hrs	Max US Stage ft	Max Time DS Stage hrs	Max DS Stage ft
S6-P7	system-6	25Y72HR	59.87	1.306	0.970	60.05	1.484	60.05	1.463
S6-P8	system-6	25Y72HR	60.14	1.244	-0.835	60.05	1.463	60.05	1.455
S7-P1	system-7	25Y72HR	60.02	1.870	0.328	60.07	1.766	60.07	1.709
S7-P2	system-7	25Y72HR	60.01	0.819	-0.298	60.07	1.773	60.07	1.766
S7-P3	system-7	25Y72HR	60.00	2.625	-1.306	60.07	1.709	60.07	1.698
S7-P4	system-7	25Y72HR	60.12	1.240	1.546	60.07	1.698	60.07	1.693
W-01	system-1	25Y72HR	60.08	1.420	0.071	60.09	1.694	60.09	1.662
W-02	system-2	25Y72HR	59.88	2.840	1.818	60.06	1.672	60.06	1.661
W-03	system-2	25Y72HR	60.10	1.403	0.202	60.07	1.597	60.07	1.576
W-04	system-2	25Y72HR	60.05	1.157	-0.010	60.07	1.570	60.07	1.538
W-05	system-3	25Y72HR	59.75	2.957	1.847	60.13	2.559	60.13	2.539
W-06	system-4	25Y72HR	59.85	3.097	1.879	60.06	1.833	60.06	1.815
W-07	system-4	25Y72HR	60.05	1.756	0.138	60.07	1.776	60.07	1.748
W-08	system-4	25Y72HR	59.86	3.071	1.872	60.07	1.793	60.06	1.777
W-09	system-5	25Y72HR	59.83	2.967	1.852	60.07	1.936	60.07	1.920
W-10	system-6	25Y72HR	59.87	3.122	1.886	60.05	1.484	60.05	1.467
W-11	system-6	25Y72HR	60.00	1.694	-0.109	60.05	1.459	60.05	1.431
W-12	system-7	25Y72HR	59.81	2.751	1.793	60.07	1.698	60.07	1.684

MASS BALANCE

South Roosevelt Blvd.
Mass Balance Report

Simulation	Time hrs	Inflow Volume ft3	Outflow Volume ft3	Change in Sys Storage ft3	Difference ft3	Error %
10Y1HR	0.00	0.0	0.0	0.0	0.0	0.00
10Y1HR	0.08	0.4	0.0	0.4	-0.0	-0.00
10Y1HR	0.17	83.7	0.0	83.7	-0.0	-0.00
10Y1HR	0.25	694.2	0.0	694.2	0.0	0.00
10Y1HR	0.33	2726.0	0.0	2726.0	0.0	0.00
10Y1HR	0.42	7218.4	0.0	7218.4	-0.0	-0.00
10Y1HR	0.50	14520.2	765.0	13755.2	-0.0	-0.00
10Y1HR	0.58	23919.1	5541.8	18377.4	-0.0	-0.00
10Y1HR	0.67	34164.5	13324.7	20839.8	-0.0	-0.00
10Y1HR	0.75	43997.9	22377.8	21620.1	-0.0	-0.00
10Y1HR	0.83	52642.5	31494.0	21148.5	-0.0	-0.00
10Y1HR	0.92	59677.9	39867.8	19810.1	0.0	0.00
10Y1HR	1.00	64953.5	46939.3	18014.3	0.0	0.00
10Y1HR	1.08	68927.5	52590.0	16337.4	-0.0	-0.00
10Y1HR	1.33	75335.3	62424.8	12910.5	-0.0	-0.00
10Y1HR	1.58	77067.7	65751.6	11316.1	-0.0	-0.00
10Y1HR	1.83	77316.4	66775.3	10541.2	-0.0	-0.00
10Y1HR	2.08	77328.0	67100.3	10227.8	0.0	0.00
10Y1HR	2.33	77328.0	67243.3	10084.7	0.0	0.00
10Y1HR	2.58	77328.0	67312.6	10015.4	0.0	0.00
10Y1HR	2.83	77328.0	67348.5	9979.5	0.0	0.00
10Y1HR	3.08	77328.0	67368.3	9959.8	0.0	0.00
10Y1HR	3.33	77328.0	67379.6	9948.4	0.0	0.00
10Y1HR	3.58	77328.0	67386.4	9941.7	0.0	0.00
10Y1HR	3.83	77328.0	67390.5	9937.5	0.0	0.00
10Y1HR	4.08	77328.0	67393.2	9934.8	0.0	0.00
10Y1HR	4.33	77328.0	67394.9	9933.1	0.0	0.00
10Y1HR	4.58	77328.0	67396.1	9931.9	0.0	0.00
10Y1HR	4.83	77328.0	67397.0	9931.1	0.0	0.00
10Y1HR	5.00	77328.0	67397.4	9930.6	0.0	0.00
10Y24HR	0.00	0.0	0.0	0.0	0.0	0.00
10Y24HR	0.08	0.0	0.0	0.0	0.0	0.00
10Y24HR	0.18	0.0	0.0	0.0	0.0	0.00
10Y24HR	0.26	0.0	0.0	0.0	0.0	0.00
10Y24HR	0.34	0.0	0.0	0.0	0.0	0.00
10Y24HR	0.42	0.0	0.0	0.0	-0.0	-0.00
10Y24HR	0.50	0.3	0.0	0.3	0.0	0.00
10Y24HR	0.58	2.9	0.0	2.9	0.0	0.00
10Y24HR	0.67	11.1	0.0	11.1	0.0	0.00
10Y24HR	0.75	27.4	0.0	27.4	0.0	0.00
10Y24HR	0.83	53.2	0.0	53.2	0.0	0.00
10Y24HR	0.92	88.7	0.0	88.7	0.0	0.00
10Y24HR	1.00	134.0	0.0	134.0	0.0	0.00
10Y24HR	1.08	195.2	0.0	195.2	-0.0	-0.00
10Y24HR	1.17	286.1	0.0	286.1	0.0	0.00
10Y24HR	1.25	412.6	0.0	412.6	0.0	0.00

South Roosevelt Blvd.
Mass Balance Report

Simulation	Time hrs	Inflow Volume ft3	Outflow Volume ft3	Change in Sys Storage ft3	Difference ft3	Error %
10Y24HR	1.33	570.7	0.0	570.7	0.0	0.00
10Y24HR	1.42	756.4	0.0	756.4	0.0	0.00
10Y24HR	1.50	966.5	0.0	966.5	0.0	0.00
10Y24HR	1.58	1198.3	0.0	1198.3	0.0	0.00
10Y24HR	1.67	1449.6	0.0	1449.6	-0.0	-0.00
10Y24HR	1.75	1718.1	0.0	1718.1	-0.0	-0.00
10Y24HR	1.83	2001.6	0.0	2001.6	-0.0	-0.00
10Y24HR	1.92	2298.1	0.0	2298.1	-0.0	-0.00
10Y24HR	2.00	2605.8	0.0	2605.8	-0.0	-0.00
10Y24HR	2.08	2935.3	0.0	2935.3	0.0	0.00
10Y24HR	2.17	3309.6	0.0	3309.6	-0.0	-0.00
10Y24HR	2.25	3732.4	0.0	3732.4	0.0	0.00
10Y24HR	2.33	4190.9	0.0	4190.9	-0.0	-0.00
10Y24HR	2.42	4676.1	0.0	4676.1	-0.0	-0.00
10Y24HR	2.50	5182.4	0.0	5182.4	-0.0	-0.00
10Y24HR	2.58	5706.0	0.0	5706.0	-0.0	-0.00
10Y24HR	2.67	6244.4	0.0	6244.4	-0.0	-0.00
10Y24HR	2.75	6795.1	0.0	6795.1	-0.0	-0.00
10Y24HR	2.83	7355.5	0.4	7355.0	-0.0	-0.00
10Y24HR	2.92	7923.6	13.7	7909.9	-0.0	-0.00
10Y24HR	3.00	8498.0	46.4	8451.6	-0.0	-0.00
10Y24HR	3.08	9077.2	119.0	8958.2	-0.0	-0.00
10Y24HR	3.17	9660.6	287.2	9373.4	-0.0	-0.00
10Y24HR	3.25	10247.6	494.0	9753.6	-0.0	-0.00
10Y24HR	3.33	10838.0	787.4	10050.6	-0.0	-0.00
10Y24HR	3.42	11431.5	1224.6	10206.9	-0.0	-0.00
10Y24HR	3.50	12027.7	1711.2	10316.5	-0.0	-0.00
10Y24HR	3.58	12626.4	2217.9	10408.5	0.0	0.00
10Y24HR	3.67	13227.4	2746.6	10480.8	0.0	0.00
10Y24HR	3.75	13830.5	3291.7	10538.9	0.0	0.00
10Y24HR	3.83	14435.6	3850.7	10584.9	0.0	0.00
10Y24HR	3.92	15042.4	4420.8	10621.7	0.0	0.00
10Y24HR	4.00	15650.9	4999.8	10651.1	0.0	0.00
10Y24HR	4.08	16261.0	5586.0	10674.9	0.0	0.00
10Y24HR	4.17	16872.8	6178.3	10694.5	0.0	0.00
10Y24HR	4.25	17486.3	6775.7	10710.6	0.0	0.00
10Y24HR	4.33	18101.2	7377.3	10723.8	0.0	0.00
10Y24HR	4.42	18717.3	7982.6	10734.8	0.0	0.00
10Y24HR	4.50	19334.7	8590.8	10743.9	0.0	0.00
10Y24HR	4.58	19953.1	9201.7	10751.4	0.0	0.00
10Y24HR	4.67	20572.6	9814.8	10757.8	0.0	0.00
10Y24HR	4.75	21192.9	10429.7	10763.2	0.0	0.00
10Y24HR	4.83	21814.1	11046.4	10767.7	0.0	0.00
10Y24HR	4.92	22436.1	11664.4	10771.6	0.0	0.00
10Y24HR	5.00	23058.8	12283.8	10775.0	0.0	0.00
10Y24HR	5.08	23697.0	12906.7	10790.3	0.0	0.00

South Roosevelt Blvd.
Mass Balance Report

Simulation	Time hrs	Inflow Volume ft3	Outflow Volume ft3	Change in Sys Storage ft3	Difference ft3	Error %
10Y24HR	5.17	24379.0	13545.8	10833.2	0.0	0.00
10Y24HR	5.25	25108.8	14216.1	10892.8	0.0	0.00
10Y24HR	5.33	25870.8	14920.4	10950.4	0.0	0.00
10Y24HR	5.42	26654.5	15653.8	11000.7	0.0	0.00
10Y24HR	5.50	27453.7	16411.3	11042.4	0.0	0.00
10Y24HR	5.58	28264.6	17187.5	11077.1	0.0	0.00
10Y24HR	5.67	29085.1	17978.3	11106.7	0.0	0.00
10Y24HR	5.75	29912.6	18781.5	11131.1	0.0	0.00
10Y24HR	5.83	30745.0	19594.6	11150.4	0.0	0.00
10Y24HR	5.92	31580.6	20415.1	11165.4	0.0	0.00
10Y24HR	6.00	32418.0	21240.8	11177.1	0.0	0.00
10Y24HR	6.08	33256.3	22070.4	11185.9	0.0	0.00
10Y24HR	6.17	34095.1	22902.5	11192.6	0.0	0.00
10Y24HR	6.25	34934.4	23736.3	11198.1	0.0	0.00
10Y24HR	6.33	35774.2	24571.2	11203.0	0.0	0.00
10Y24HR	6.42	36614.4	25407.0	11207.5	0.0	0.00
10Y24HR	6.50	37455.1	26243.3	11211.8	0.0	0.00
10Y24HR	6.58	38296.2	27080.2	11216.0	0.0	0.00
10Y24HR	6.67	39137.6	27917.5	11220.1	0.0	0.00
10Y24HR	6.75	39979.4	28755.1	11224.3	0.0	0.00
10Y24HR	6.83	40821.5	29593.1	11228.5	0.0	0.00
10Y24HR	6.92	41664.0	30431.4	11232.6	0.0	0.00
10Y24HR	7.00	42506.8	31269.9	11236.9	0.0	0.00
10Y24HR	7.08	43350.0	32108.8	11241.2	0.0	0.00
10Y24HR	7.17	44193.9	32948.0	11245.9	0.0	0.00
10Y24HR	7.25	45038.5	33787.8	11250.7	0.0	0.00
10Y24HR	7.33	45883.8	34628.1	11255.6	0.0	0.00
10Y24HR	7.42	46729.4	35468.9	11260.5	0.0	0.00
10Y24HR	7.50	47575.5	36310.1	11265.3	0.0	0.00
10Y24HR	7.58	48421.8	37151.7	11270.2	0.0	0.00
10Y24HR	7.67	49268.5	37993.5	11275.0	0.0	0.00
10Y24HR	7.75	50115.4	38835.6	11279.9	0.0	0.00
10Y24HR	7.83	50962.6	39677.9	11284.7	0.0	0.00
10Y24HR	7.92	51810.0	40520.5	11289.5	0.0	0.00
10Y24HR	8.00	52657.7	41363.2	11294.5	0.0	0.00
10Y24HR	8.08	53535.7	42211.3	11324.4	0.0	0.00
10Y24HR	8.17	54501.7	43088.9	11412.7	0.0	0.00
10Y24HR	8.25	55564.0	44019.7	11544.4	0.0	0.00
10Y24HR	8.33	56690.5	45011.5	11679.0	0.0	0.00
10Y24HR	8.42	57860.0	46057.2	11802.9	0.0	0.00
10Y24HR	8.50	59059.7	47159.3	11900.4	0.0	0.00
10Y24HR	8.58	60282.1	48297.8	11984.4	0.0	0.00
10Y24HR	8.67	61522.7	49492.6	12030.1	0.0	0.00
10Y24HR	8.75	62776.6	50722.0	12054.5	0.0	0.00
10Y24HR	8.83	64039.3	51966.3	12073.0	0.0	0.00
10Y24HR	8.92	65307.3	53220.5	12086.9	0.0	0.00

South Roosevelt Blvd.
Mass Balance Report

Simulation	Time hrs	Inflow Volume ft3	Outflow Volume ft3	Change in Sys Storage ft3	Difference ft3	Error %
10Y24HR	9.00	66578.2	54481.1	12097.1	0.0	0.00
10Y24HR	9.08	67849.9	55745.4	12104.5	0.0	0.00
10Y24HR	9.17	69121.8	57011.6	12110.2	0.0	0.00
10Y24HR	9.25	70393.9	58278.6	12115.3	0.0	0.00
10Y24HR	9.33	71666.2	59546.3	12119.9	0.0	0.00
10Y24HR	9.42	72938.7	60814.2	12124.4	0.0	0.00
10Y24HR	9.50	74211.3	62082.5	12128.8	0.0	0.00
10Y24HR	9.58	75484.1	63350.9	12133.2	0.0	0.00
10Y24HR	9.67	76757.0	64619.5	12137.5	0.0	0.00
10Y24HR	9.75	78030.1	65888.3	12141.8	0.0	0.00
10Y24HR	9.83	79303.3	67157.2	12146.1	0.0	0.00
10Y24HR	9.92	80576.7	68426.3	12150.4	0.0	0.00
10Y24HR	10.00	81850.2	69695.5	12154.7	0.0	0.00
10Y24HR	10.08	83153.5	70970.9	12182.6	0.0	0.00
10Y24HR	10.17	84545.3	72283.2	12262.2	0.0	0.00
10Y24HR	10.25	86035.7	73667.5	12368.2	0.0	0.00
10Y24HR	10.33	87591.8	75124.6	12467.2	0.0	0.00
10Y24HR	10.42	89192.0	76656.6	12535.4	0.0	0.00
10Y24HR	10.50	90822.9	78240.4	12582.6	0.0	0.00
10Y24HR	10.58	92477.1	79858.2	12618.9	0.0	0.00
10Y24HR	10.67	94149.6	81501.0	12648.6	0.0	0.00
10Y24HR	10.75	95835.7	83162.4	12673.4	0.0	0.00
10Y24HR	10.83	97530.8	84837.0	12693.8	0.0	0.00
10Y24HR	10.92	99231.3	86520.5	12710.8	0.0	0.00
10Y24HR	11.00	100934.6	88209.5	12725.1	0.0	0.00
10Y24HR	11.08	102668.9	89908.5	12760.5	0.0	0.00
10Y24HR	11.17	104491.2	91649.3	12841.9	0.0	0.00
10Y24HR	11.25	106409.6	93465.7	12943.9	0.0	0.00
10Y24HR	11.33	108392.1	95361.0	13031.1	0.0	0.00
10Y24HR	11.42	110417.5	97336.6	13081.0	0.0	0.00
10Y24HR	11.50	112472.9	99356.3	13116.6	0.0	0.00
10Y24HR	11.58	114551.0	101407.7	13143.3	0.0	0.00
10Y24HR	11.67	116647.0	103483.2	13163.8	0.0	0.00
10Y24HR	11.75	118756.3	105577.2	13179.1	0.0	0.00
10Y24HR	11.83	120874.2	107684.5	13189.7	0.0	0.00
10Y24HR	11.92	122997.4	109800.7	13196.7	0.0	0.00
10Y24HR	12.00	125123.2	111922.4	13200.8	0.0	0.00
10Y24HR	12.08	127204.9	114035.4	13169.5	-0.0	-0.00
10Y24HR	12.17	129154.4	116082.1	13072.3	-0.0	-0.00
10Y24HR	12.25	130957.8	118005.6	12952.2	-0.0	-0.00
10Y24HR	12.33	132664.1	119812.3	12851.8	-0.0	-0.00
10Y24HR	12.42	134305.3	121529.7	12775.6	-0.0	-0.00
10Y24HR	12.50	135901.2	123182.2	12719.0	-0.0	-0.00
10Y24HR	12.58	137462.9	124787.4	12675.5	0.0	0.00
10Y24HR	12.67	138997.6	126356.5	12641.2	0.0	0.00
10Y24HR	12.75	140512.5	127898.0	12614.4	-0.0	-0.00

South Roosevelt Blvd.
Mass Balance Report

Simulation	Time hrs	Inflow Volume ft3	Outflow Volume ft3	Change in Sys Storage ft3	Difference ft3	Error %
10Y24HR	12.83	142014.3	129419.5	12594.8	-0.0	-0.00
10Y24HR	12.92	143508.3	130927.1	12581.2	-0.0	-0.00
10Y24HR	13.00	144998.5	132425.7	12572.8	-0.0	-0.00
10Y24HR	13.08	146473.2	133916.0	12557.2	-0.0	-0.00
10Y24HR	13.17	147904.6	135384.6	12520.1	0.0	0.00
10Y24HR	13.25	149288.0	136814.6	12473.5	-0.0	-0.00
10Y24HR	13.33	150639.4	138206.4	12433.0	-0.0	-0.00
10Y24HR	13.42	151969.2	139567.8	12401.5	-0.0	-0.00
10Y24HR	13.50	153284.2	140906.4	12377.8	0.0	0.00
10Y24HR	13.58	154587.9	142228.0	12359.8	-0.0	-0.00
10Y24HR	13.67	155882.6	143536.7	12345.9	-0.0	-0.00
10Y24HR	13.75	157170.9	144835.4	12335.4	-0.0	-0.00
10Y24HR	13.83	158454.8	146126.9	12328.0	-0.0	-0.00
10Y24HR	13.92	159736.2	147413.3	12323.0	-0.0	-0.00
10Y24HR	14.00	161016.3	148696.4	12319.9	-0.0	-0.00
10Y24HR	14.08	162295.9	149977.8	12318.1	-0.0	-0.00
10Y24HR	14.17	163574.9	151258.0	12316.9	-0.0	-0.00
10Y24HR	14.25	164853.1	152537.3	12315.8	-0.0	-0.00
10Y24HR	14.33	166131.0	153815.9	12315.1	-0.0	-0.00
10Y24HR	14.42	167408.5	155093.9	12314.6	-0.0	-0.00
10Y24HR	14.50	168685.8	156371.6	12314.2	-0.0	-0.00
10Y24HR	14.58	169963.0	157649.1	12313.9	-0.0	-0.00
10Y24HR	14.67	171240.1	158926.3	12313.7	-0.0	-0.00
10Y24HR	14.75	172517.1	160203.5	12313.6	-0.0	-0.00
10Y24HR	14.83	173794.0	161480.5	12313.5	-0.0	-0.00
10Y24HR	14.92	175070.9	162757.5	12313.4	-0.0	-0.00
10Y24HR	15.00	176347.8	164034.4	12313.4	-0.0	-0.00
10Y24HR	15.08	177609.8	165308.1	12301.6	0.0	0.00
10Y24HR	15.17	178827.6	166562.5	12265.1	-0.0	-0.00
10Y24HR	15.25	179996.7	167779.4	12217.3	-0.0	-0.00
10Y24HR	15.33	181133.3	168958.4	12174.9	0.0	0.00
10Y24HR	15.42	182248.3	170107.2	12141.1	0.0	0.00
10Y24HR	15.50	183348.2	171232.8	12115.3	0.0	0.00
10Y24HR	15.58	184436.6	172340.9	12095.7	0.0	0.00
10Y24HR	15.67	185516.0	173435.6	12080.4	0.0	0.00
10Y24HR	15.75	186588.8	174519.9	12068.9	0.0	0.00
10Y24HR	15.83	187657.2	175596.6	12060.7	0.0	0.00
10Y24HR	15.92	188723.1	176668.0	12055.1	0.0	0.00
10Y24HR	16.00	189787.6	177735.9	12051.7	0.0	0.00
10Y24HR	16.08	190837.2	178799.0	12038.2	0.0	0.00
10Y24HR	16.17	191843.4	179843.4	12000.0	0.0	0.00
10Y24HR	16.25	192801.2	180851.8	11949.4	0.0	0.00
10Y24HR	16.33	193726.8	181822.7	11904.1	0.0	0.00
10Y24HR	16.42	194630.7	182762.6	11868.1	0.0	0.00
10Y24HR	16.50	195519.7	183678.7	11840.9	0.0	0.00
10Y24HR	16.58	196397.3	184577.4	11819.9	0.0	0.00

South Roosevelt Blvd.
Mass Balance Report

Simulation	Time hrs	Inflow Volume ft3	Outflow Volume ft3	Change in Sys Storage ft3	Difference ft3	Error %
10Y24HR	16.67	197265.9	185462.7	11803.2	0.0	0.00
10Y24HR	16.75	198127.9	186337.4	11790.6	0.0	0.00
10Y24HR	16.83	198985.6	187204.1	11781.5	0.0	0.00
10Y24HR	16.92	199840.8	188065.4	11775.4	0.0	0.00
10Y24HR	17.00	200694.6	188923.1	11771.5	0.0	0.00
10Y24HR	17.08	201547.9	189778.6	11769.3	0.0	0.00
10Y24HR	17.17	202400.8	190632.9	11767.9	0.0	0.00
10Y24HR	17.25	203253.3	191486.4	11766.9	0.0	0.00
10Y24HR	17.33	204105.4	192339.2	11766.2	0.0	0.00
10Y24HR	17.42	204957.4	193191.6	11765.7	0.0	0.00
10Y24HR	17.50	205809.2	194043.8	11765.4	0.0	0.00
10Y24HR	17.58	206660.9	194895.7	11765.2	0.0	0.00
10Y24HR	17.67	207512.5	195747.5	11765.0	0.0	0.00
10Y24HR	17.75	208364.0	196599.2	11764.9	-0.0	-0.00
10Y24HR	17.83	209215.6	197450.8	11764.8	-0.0	-0.00
10Y24HR	17.92	210067.1	198302.3	11764.7	-0.0	-0.00
10Y24HR	18.00	210918.5	199153.9	11764.7	-0.0	-0.00
10Y24HR	18.08	211770.0	200005.4	11764.7	-0.0	-0.00
10Y24HR	18.17	212621.5	200856.9	11764.7	-0.0	-0.00
10Y24HR	18.25	213473.0	201708.4	11764.7	-0.0	-0.00
10Y24HR	18.33	214324.5	202559.9	11764.7	-0.0	-0.00
10Y24HR	18.42	215176.0	203411.4	11764.7	-0.0	-0.00
10Y24HR	18.50	216027.5	204262.9	11764.7	-0.0	-0.00
10Y24HR	18.58	216879.0	205114.4	11764.7	-0.0	-0.00
10Y24HR	18.67	217730.6	205965.9	11764.7	-0.0	-0.00
10Y24HR	18.75	218582.1	206817.4	11764.7	-0.0	-0.00
10Y24HR	18.83	219433.6	207668.9	11764.7	-0.0	-0.00
10Y24HR	18.92	220285.1	208520.4	11764.7	-0.0	-0.00
10Y24HR	19.00	221136.6	209371.9	11764.7	-0.0	-0.00
10Y24HR	19.08	221973.5	210220.9	11752.7	-0.0	-0.00
10Y24HR	19.17	222766.9	211053.6	11713.2	-0.0	-0.00
10Y24HR	19.25	223511.7	211854.7	11657.0	-0.0	-0.00
10Y24HR	19.33	224224.2	212622.3	11601.9	-0.0	-0.00
10Y24HR	19.42	224915.0	213361.1	11553.9	-0.0	-0.00
10Y24HR	19.50	225590.8	214076.7	11514.1	-0.0	-0.00
10Y24HR	19.58	226255.2	214773.9	11481.3	-0.0	-0.00
10Y24HR	19.67	226910.6	215456.6	11454.0	-0.0	-0.00
10Y24HR	19.75	227559.4	216127.6	11431.8	-0.0	-0.00
10Y24HR	19.83	228203.9	216789.7	11414.2	-0.0	-0.00
10Y24HR	19.92	228845.7	217445.0	11400.7	-0.0	-0.00
10Y24HR	20.00	229486.3	218095.5	11390.7	-0.0	-0.00
10Y24HR	20.08	230126.4	218742.9	11383.5	-0.0	-0.00
10Y24HR	20.17	230766.1	219388.1	11378.1	0.0	0.00
10Y24HR	20.25	231405.6	220031.7	11373.9	0.0	0.00
10Y24HR	20.33	232044.8	220674.1	11370.7	0.0	0.00
10Y24HR	20.42	232683.8	221315.6	11368.2	0.0	0.00

South Roosevelt Blvd.
Mass Balance Report

Simulation	Time hrs	Inflow Volume ft3	Outflow Volume ft3	Change in Sys Storage ft3	Difference ft3	Error %
10Y24HR	20.50	233322.8	221956.5	11366.2	0.0	0.00
10Y24HR	20.58	233961.6	222596.9	11364.7	0.0	0.00
10Y24HR	20.67	234600.4	223236.9	11363.6	0.0	0.00
10Y24HR	20.75	235239.2	223876.5	11362.6	0.0	0.00
10Y24HR	20.83	235877.9	224516.0	11361.9	0.0	0.00
10Y24HR	20.92	236516.6	225155.2	11361.3	0.0	0.00
10Y24HR	21.00	237155.2	225794.4	11360.9	0.0	0.00
10Y24HR	21.08	237778.9	226430.9	11348.0	0.0	0.00
10Y24HR	21.17	238358.5	227052.0	11306.5	0.0	0.00
10Y24HR	21.25	238889.3	227641.6	11247.7	0.0	0.00
10Y24HR	21.33	239387.6	228197.0	11190.6	0.0	0.00
10Y24HR	21.42	239864.3	228722.8	11141.5	0.0	0.00
10Y24HR	21.50	240325.8	229224.6	11101.2	0.0	0.00
10Y24HR	21.58	240775.9	229707.9	11068.0	0.0	0.00
10Y24HR	21.67	241216.9	230176.7	11040.2	0.0	0.00
10Y24HR	21.75	241651.3	230633.9	11017.5	0.0	0.00
10Y24HR	21.83	242081.4	231081.9	10999.5	0.0	0.00
10Y24HR	21.92	242508.8	231523.2	10985.6	0.0	0.00
10Y24HR	22.00	242934.9	231959.7	10975.3	0.0	0.00
10Y24HR	22.08	243346.0	232390.5	10955.5	0.0	0.00
10Y24HR	22.17	243713.3	232803.9	10909.4	0.0	0.00
10Y24HR	22.25	244031.9	233184.1	10847.8	0.0	0.00
10Y24HR	22.33	244318.0	233528.5	10789.5	0.0	0.00
10Y24HR	22.42	244582.3	233842.9	10739.4	0.0	0.00
10Y24HR	22.50	244831.5	234133.5	10697.9	0.0	0.00
10Y24HR	22.58	245069.2	234405.5	10663.7	0.0	0.00
10Y24HR	22.67	245297.9	234662.7	10635.2	0.0	0.00
10Y24HR	22.75	245520.0	234908.0	10611.9	0.0	0.00
10Y24HR	22.83	245737.7	235144.2	10593.5	0.0	0.00
10Y24HR	22.92	245952.7	235373.4	10579.3	0.0	0.00
10Y24HR	23.00	246166.5	235597.8	10568.7	0.0	0.00
10Y24HR	23.08	246379.9	235818.8	10561.1	0.0	0.00
10Y24HR	23.17	246593.1	236037.7	10555.5	0.0	0.00
10Y24HR	23.25	246806.3	236255.0	10551.3	0.0	0.00
10Y24HR	23.33	247019.4	236471.3	10548.0	0.0	0.00
10Y24HR	23.42	247232.4	236686.9	10545.6	0.0	0.00
10Y24HR	23.50	247445.4	236901.8	10543.6	0.0	0.00
10Y24HR	23.58	247658.4	237116.2	10542.1	0.0	0.00
10Y24HR	23.67	247871.3	237330.3	10541.0	0.0	0.00
10Y24HR	23.75	248084.2	237544.2	10540.0	0.0	0.00
10Y24HR	23.83	248297.1	237757.8	10539.3	0.0	0.00
10Y24HR	23.92	248510.1	237971.3	10538.8	0.0	0.00
10Y24HR	24.00	248722.9	238184.6	10538.3	0.0	0.00
10Y24HR	24.08	248914.5	238394.6	10519.8	0.0	0.00
10Y24HR	24.33	249246.0	238886.0	10360.0	0.0	0.00
10Y24HR	24.58	249367.3	239158.7	10208.7	0.0	0.00

South Roosevelt Blvd.
Mass Balance Report

Simulation	Time hrs	Inflow Volume ft3	Outflow Volume ft3	Change in Sys Storage ft3	Difference ft3	Error %
10Y24HR	24.83	249399.5	239304.6	10094.9	0.0	0.00
10Y24HR	25.08	249403.4	239379.1	10024.3	0.0	0.00
10Y24HR	25.33	249403.4	239417.9	9985.4	0.0	0.00
10Y24HR	25.58	249403.4	239439.7	9963.7	0.0	0.00
10Y24HR	25.83	249403.4	239452.5	9950.9	0.0	0.00
10Y24HR	26.08	249403.4	239460.2	9943.2	0.0	0.00
10Y24HR	26.33	249403.4	239465.0	9938.3	0.0	0.00
10Y24HR	26.58	249403.4	239468.2	9935.2	0.0	0.00
10Y24HR	26.83	249403.4	239470.2	9933.1	0.0	0.00
10Y24HR	27.08	249403.4	239471.6	9931.7	0.0	0.00
10Y24HR	27.33	249403.4	239472.6	9930.8	0.0	0.00
10Y24HR	27.58	249403.4	239473.3	9930.1	0.0	0.00
10Y24HR	27.83	249403.4	239473.8	9929.6	0.0	0.00
10Y24HR	28.00	249403.4	239474.1	9929.3	0.0	0.00
10Y8HR	0.00	0.0	0.0	0.0	0.0	0.00
10Y8HR	0.08	0.0	0.0	0.0	0.0	0.00
10Y8HR	0.18	0.0	0.0	0.0	0.0	0.00
10Y8HR	0.26	0.0	0.0	0.0	0.0	0.00
10Y8HR	0.34	0.0	0.0	0.0	0.0	0.00
10Y8HR	0.42	0.5	0.0	0.5	-0.0	-0.00
10Y8HR	0.50	4.6	0.0	4.6	-0.0	-0.00
10Y8HR	0.58	17.5	0.0	17.5	-0.0	-0.00
10Y8HR	0.67	42.7	0.0	42.7	0.0	0.00
10Y8HR	0.75	81.9	0.0	81.9	0.0	0.00
10Y8HR	0.83	135.4	0.0	135.4	0.0	0.00
10Y8HR	0.92	203.1	0.0	203.1	0.0	0.00
10Y8HR	1.00	284.5	0.0	284.5	0.0	0.00
10Y8HR	1.08	425.4	0.0	425.4	-0.0	-0.00
10Y8HR	1.17	734.2	0.0	734.2	-0.0	-0.00
10Y8HR	1.25	1258.6	0.0	1258.6	-0.0	-0.00
10Y8HR	1.33	1966.0	0.0	1966.0	-0.0	-0.00
10Y8HR	1.42	2821.2	0.0	2821.2	-0.0	-0.00
10Y8HR	1.50	3795.2	0.0	3795.2	-0.0	-0.00
10Y8HR	1.58	4866.2	0.0	4866.2	0.0	0.00
10Y8HR	1.67	6018.0	0.0	6018.0	-0.0	-0.00
10Y8HR	1.75	7235.4	0.0	7235.4	-0.0	-0.00
10Y8HR	1.83	8503.7	23.6	8480.1	-0.0	-0.00
10Y8HR	1.92	9811.0	177.1	9633.9	-0.0	-0.00
10Y8HR	2.00	11147.4	585.3	10562.0	-0.0	-0.00
10Y8HR	2.08	12540.3	1447.2	11093.1	-0.0	-0.00
10Y8HR	2.17	14055.2	2514.8	11540.4	-0.0	-0.00
10Y8HR	2.25	15700.6	3754.8	11945.9	-0.0	-0.00
10Y8HR	2.33	17435.9	5117.4	12318.6	-0.0	-0.00
10Y8HR	2.42	19233.9	6648.0	12586.0	-0.0	-0.00
10Y8HR	2.50	21077.3	8308.8	12768.4	-0.0	-0.00
10Y8HR	2.58	22955.9	10082.2	12873.7	-0.0	-0.00

South Roosevelt Blvd.
Mass Balance Report

Simulation	Time hrs	Inflow Volume ft3	Outflow Volume ft3	Change in Sys Storage ft3	Difference ft3	Error %
10Y8HR	2.67	24863.0	11928.8	12934.2	0.0	0.00
10Y8HR	2.75	26792.0	13803.9	12988.2	0.0	0.00
10Y8HR	2.83	28736.6	15717.2	13019.4	0.0	0.00
10Y8HR	2.92	30691.8	17659.0	13032.8	0.0	0.00
10Y8HR	3.00	32654.0	19612.1	13041.9	0.0	0.00
10Y8HR	3.08	34870.7	21637.2	13233.4	0.0	0.00
10Y8HR	3.17	37830.1	24055.5	13774.6	0.0	0.00
10Y8HR	3.25	41604.3	27172.7	14431.5	0.0	0.00
10Y8HR	3.33	45933.2	30914.1	15019.2	0.0	0.00
10Y8HR	3.42	50628.1	35106.2	15521.9	0.0	0.00
10Y8HR	3.50	55587.8	39663.1	15924.6	0.0	0.00
10Y8HR	3.58	60737.5	44495.6	16241.9	0.0	0.00
10Y8HR	3.67	66052.0	49558.3	16493.7	0.0	0.00
10Y8HR	3.75	71465.5	54778.8	16686.7	0.0	0.00
10Y8HR	3.83	76966.6	60139.8	16826.8	0.0	0.00
10Y8HR	3.92	82514.4	65591.7	16922.7	0.0	0.00
10Y8HR	4.00	88086.6	71103.7	16982.9	0.0	0.00
10Y8HR	4.08	93423.1	76598.1	16825.0	0.0	0.00
10Y8HR	4.17	98041.0	81803.4	16237.6	0.0	0.00
10Y8HR	4.25	101870.3	86426.8	15443.5	0.0	0.00
10Y8HR	4.33	105175.3	90431.4	14743.9	0.0	0.00
10Y8HR	4.42	108126.8	93892.2	14234.6	0.0	0.00
10Y8HR	4.50	110833.3	96926.2	13907.1	0.0	0.00
10Y8HR	4.58	113354.7	99665.9	13688.9	0.0	0.00
10Y8HR	4.67	115729.7	102202.9	13526.7	0.0	0.00
10Y8HR	4.75	117996.9	104591.2	13405.7	0.0	0.00
10Y8HR	4.83	120193.7	106872.6	13321.1	0.0	0.00
10Y8HR	4.92	122348.4	109083.2	13265.2	0.0	0.00
10Y8HR	5.00	124482.0	111249.6	13232.4	0.0	0.00
10Y8HR	5.08	126516.7	113368.7	13148.0	0.0	0.00
10Y8HR	5.17	128275.2	115339.1	12936.0	0.0	0.00
10Y8HR	5.25	129729.1	117052.5	12676.7	0.0	0.00
10Y8HR	5.33	130980.6	118531.0	12449.6	0.0	0.00
10Y8HR	5.42	132096.3	119833.0	12263.3	0.0	0.00
10Y8HR	5.50	133117.6	121001.7	12115.8	0.0	0.00
10Y8HR	5.58	134067.5	122069.4	11998.1	0.0	0.00
10Y8HR	5.67	134961.0	123057.2	11903.8	0.0	0.00
10Y8HR	5.75	135813.0	123982.5	11830.4	0.0	0.00
10Y8HR	5.83	136637.7	124861.6	11776.1	0.0	0.00
10Y8HR	5.92	137446.3	125708.1	11738.2	0.0	0.00
10Y8HR	6.00	138246.7	126533.4	11713.4	0.0	0.00
10Y8HR	6.08	139035.7	127344.7	11691.0	0.0	0.00
10Y8HR	6.17	139797.0	128140.0	11657.1	0.0	0.00
10Y8HR	6.25	140527.9	128912.7	11615.3	0.0	0.00
10Y8HR	6.33	141238.6	129662.6	11576.0	0.0	0.00
10Y8HR	6.42	141935.6	130393.1	11542.6	0.0	0.00

South Roosevelt Blvd.
Mass Balance Report

Simulation	Time hrs	Inflow Volume ft3	Outflow Volume ft3	Change in Sys Storage ft3	Difference ft3	Error %
10Y8HR	6.50	142623.3	131108.1	11515.2	0.0	0.00
10Y8HR	6.58	143303.8	131811.0	11492.8	0.0	0.00
10Y8HR	6.67	143978.6	132504.3	11474.3	0.0	0.00
10Y8HR	6.75	144649.3	133190.0	11459.3	0.0	0.00
10Y8HR	6.83	145317.3	133869.9	11447.4	0.0	0.00
10Y8HR	6.92	145983.7	134545.3	11438.4	0.0	0.00
10Y8HR	7.00	146649.2	135217.7	11431.6	0.0	0.00
10Y8HR	7.08	147295.9	135884.8	11411.0	0.0	0.00
10Y8HR	7.17	147887.2	136531.5	11355.8	0.0	0.00
10Y8HR	7.25	148417.7	137137.9	11279.8	0.0	0.00
10Y8HR	7.33	148907.6	137701.0	11206.6	0.0	0.00
10Y8HR	7.42	149370.4	138226.5	11143.9	0.0	0.00
10Y8HR	7.50	149814.2	138721.7	11092.5	0.0	0.00
10Y8HR	7.58	150243.8	139193.6	11050.2	0.0	0.00
10Y8HR	7.67	150662.1	139647.1	11015.0	0.0	0.00
10Y8HR	7.75	151072.1	140085.9	10986.2	0.0	0.00
10Y8HR	7.83	151476.6	140513.2	10963.4	0.0	0.00
10Y8HR	7.92	151877.9	140932.1	10945.8	0.0	0.00
10Y8HR	8.00	152277.6	141344.9	10932.7	0.0	0.00
10Y8HR	8.08	152636.8	141747.1	10889.7	0.0	0.00
10Y8HR	8.33	153259.0	142663.6	10595.4	0.0	0.00
10Y8HR	8.58	153486.8	143139.9	10346.9	0.0	0.00
10Y8HR	8.83	153547.3	143375.7	10171.6	0.0	0.00
10Y8HR	9.08	153554.6	143491.8	10062.8	0.0	0.00
10Y8HR	9.33	153554.6	143548.9	10005.7	0.0	0.00
10Y8HR	9.58	153554.6	143579.7	9974.9	0.0	0.00
10Y8HR	9.83	153554.6	143597.2	9957.4	0.0	0.00
10Y8HR	10.08	153554.6	143607.6	9947.1	0.0	0.00
10Y8HR	10.33	153554.6	143613.9	9940.8	0.0	0.00
10Y8HR	10.58	153554.6	143617.9	9936.8	0.0	0.00
10Y8HR	10.83	153554.6	143620.4	9934.2	0.0	0.00
10Y8HR	11.08	153554.6	143622.2	9932.5	0.0	0.00
10Y8HR	11.33	153554.6	143623.4	9931.3	0.0	0.00
10Y8HR	11.58	153554.6	143624.2	9930.5	0.0	0.00
10Y8HR	11.83	153554.6	143624.8	9929.9	0.0	0.00
10Y8HR	12.00	153554.6	143625.1	9929.6	0.0	0.00
25Y72HR	0.00	0.0	0.0	0.0	0.0	0.00
25Y72HR	0.08	0.0	0.0	0.0	0.0	0.00
25Y72HR	0.18	0.0	0.0	0.0	0.0	0.00
25Y72HR	0.26	0.0	0.0	0.0	0.0	0.00
25Y72HR	0.34	0.0	0.0	0.0	0.0	0.00
25Y72HR	0.42	0.0	0.0	0.0	0.0	0.00
25Y72HR	0.50	0.0	0.0	0.0	0.0	0.00
25Y72HR	0.60	0.0	0.0	0.0	0.0	0.00
25Y72HR	0.68	0.0	0.0	0.0	0.0	0.00
25Y72HR	0.77	0.0	0.0	0.0	0.0	0.00

South Roosevelt Blvd.
Mass Balance Report

Simulation	Time hrs	Inflow Volume ft3	Outflow Volume ft3	Change in Sys Storage ft3	Difference ft3	Error %
25Y72HR	0.83	0.1	0.0	0.1	-0.0	-0.00
25Y72HR	0.92	0.9	0.0	0.9	-0.0	-0.00
25Y72HR	1.00	3.5	0.0	3.5	-0.0	-0.00
25Y72HR	1.08	8.9	0.0	8.9	0.0	0.00
25Y72HR	1.17	17.5	0.0	17.5	0.0	0.00
25Y72HR	1.25	29.5	0.0	29.5	0.0	0.00
25Y72HR	1.33	45.2	0.0	45.2	0.0	0.00
25Y72HR	1.42	64.5	0.0	64.5	0.0	0.00
25Y72HR	1.50	87.4	0.0	87.4	0.0	0.00
25Y72HR	1.58	113.8	0.0	113.8	0.0	0.00
25Y72HR	1.67	143.6	0.0	143.6	0.0	0.00
25Y72HR	1.75	176.8	0.0	176.8	0.0	0.00
25Y72HR	1.83	213.1	0.0	213.1	0.0	0.00
25Y72HR	1.92	252.3	0.0	252.3	0.0	0.00
25Y72HR	2.00	294.3	0.0	294.3	0.0	0.00
25Y72HR	2.08	339.0	0.0	339.0	0.0	0.00
25Y72HR	2.17	386.3	0.0	386.3	-0.0	-0.00
25Y72HR	2.25	435.9	0.0	435.9	-0.0	-0.00
25Y72HR	2.33	487.8	0.0	487.8	-0.0	-0.00
25Y72HR	2.42	541.9	0.0	541.9	-0.0	-0.00
25Y72HR	2.50	598.1	0.0	598.1	-0.0	-0.00
25Y72HR	2.58	656.2	0.0	656.2	0.0	0.00
25Y72HR	2.67	716.2	0.0	716.2	0.0	0.00
25Y72HR	2.75	778.0	0.0	778.0	0.0	0.00
25Y72HR	2.83	841.5	0.0	841.5	-0.0	-0.00
25Y72HR	2.92	906.6	0.0	906.6	-0.0	-0.00
25Y72HR	3.00	973.4	0.0	973.4	-0.0	-0.00
25Y72HR	3.08	1041.6	0.0	1041.6	0.0	0.00
25Y72HR	3.17	1111.2	0.0	1111.2	-0.0	-0.00
25Y72HR	3.25	1182.3	0.0	1182.3	-0.0	-0.00
25Y72HR	3.33	1254.6	0.0	1254.6	-0.0	-0.00
25Y72HR	3.42	1328.2	0.0	1328.2	-0.0	-0.00
25Y72HR	3.50	1403.1	0.0	1403.1	-0.0	-0.00
25Y72HR	3.58	1479.1	0.0	1479.1	-0.0	-0.00
25Y72HR	3.67	1556.2	0.0	1556.2	-0.0	-0.00
25Y72HR	3.75	1634.4	0.0	1634.4	-0.0	-0.00
25Y72HR	3.83	1713.6	0.0	1713.6	-0.0	-0.00
25Y72HR	3.92	1793.8	0.0	1793.8	-0.0	-0.00
25Y72HR	4.00	1875.0	0.0	1875.0	-0.0	-0.00
25Y72HR	4.08	1957.2	0.0	1957.2	-0.0	-0.00
25Y72HR	4.17	2040.2	0.0	2040.2	-0.0	-0.00
25Y72HR	4.25	2124.1	0.0	2124.1	-0.0	-0.00
25Y72HR	4.33	2208.8	0.0	2208.8	-0.0	-0.00
25Y72HR	4.42	2294.3	0.0	2294.3	-0.0	-0.00
25Y72HR	4.50	2380.6	0.0	2380.6	-0.0	-0.00
25Y72HR	4.58	2467.6	0.0	2467.6	-0.0	-0.00

South Roosevelt Blvd.
Mass Balance Report

Simulation	Time hrs	Inflow Volume ft3	Outflow Volume ft3	Change in Sys Storage ft3	Difference ft3	Error %
25Y72HR	4.67	2555.4	0.0	2555.4	-0.0	-0.00
25Y72HR	4.75	2643.8	0.0	2643.8	-0.0	-0.00
25Y72HR	4.83	2733.0	0.0	2733.0	-0.0	-0.00
25Y72HR	4.92	2822.8	0.0	2822.8	-0.0	-0.00
25Y72HR	5.00	2913.2	0.0	2913.2	-0.0	-0.00
25Y72HR	5.08	3004.2	0.0	3004.2	-0.0	-0.00
25Y72HR	5.17	3095.8	0.0	3095.8	-0.0	-0.00
25Y72HR	5.25	3188.0	0.0	3188.0	-0.0	-0.00
25Y72HR	5.33	3280.8	0.0	3280.8	-0.0	-0.00
25Y72HR	5.42	3374.1	0.0	3374.1	-0.0	-0.00
25Y72HR	5.50	3467.9	0.0	3467.9	-0.0	-0.00
25Y72HR	5.58	3562.3	0.0	3562.3	-0.0	-0.00
25Y72HR	5.67	3657.1	0.0	3657.1	-0.0	-0.00
25Y72HR	5.75	3752.4	0.0	3752.4	-0.0	-0.00
25Y72HR	5.83	3848.1	0.0	3848.1	-0.0	-0.00
25Y72HR	5.92	3944.4	0.0	3944.4	-0.0	-0.00
25Y72HR	6.00	4041.0	0.0	4041.0	-0.0	-0.00
25Y72HR	6.08	4138.1	0.0	4138.1	-0.0	-0.00
25Y72HR	6.17	4235.6	0.0	4235.6	-0.0	-0.00
25Y72HR	6.25	4333.5	0.0	4333.5	-0.0	-0.00
25Y72HR	6.33	4431.8	0.0	4431.8	-0.0	-0.00
25Y72HR	6.42	4530.4	0.0	4530.4	-0.0	-0.00
25Y72HR	6.50	4629.5	0.0	4629.5	-0.0	-0.00
25Y72HR	6.58	4728.9	0.0	4728.9	-0.0	-0.00
25Y72HR	6.67	4828.6	0.0	4828.6	-0.0	-0.00
25Y72HR	6.75	4928.7	0.0	4928.7	-0.0	-0.00
25Y72HR	6.83	5029.1	0.0	5029.1	-0.0	-0.00
25Y72HR	6.92	5129.9	0.0	5129.9	-0.0	-0.00
25Y72HR	7.00	5230.9	0.0	5230.9	-0.0	-0.00
25Y72HR	7.08	5332.3	0.0	5332.3	-0.0	-0.00
25Y72HR	7.17	5434.0	0.0	5434.0	-0.0	-0.00
25Y72HR	7.25	5536.0	0.0	5536.0	-0.0	-0.00
25Y72HR	7.33	5638.2	0.0	5638.2	-0.0	-0.00
25Y72HR	7.42	5740.7	0.0	5740.7	-0.0	-0.00
25Y72HR	7.50	5843.5	0.0	5843.5	-0.0	-0.00
25Y72HR	7.58	5946.6	0.0	5946.6	-0.0	-0.00
25Y72HR	7.67	6049.9	0.0	6049.9	-0.0	-0.00
25Y72HR	7.75	6153.5	0.0	6153.5	-0.0	-0.00
25Y72HR	7.83	6257.3	0.0	6257.3	-0.0	-0.00
25Y72HR	7.92	6361.4	0.0	6361.4	-0.0	-0.00
25Y72HR	8.00	6465.7	0.0	6465.7	-0.0	-0.00
25Y72HR	8.08	6570.2	0.0	6570.2	-0.0	-0.00
25Y72HR	8.17	6675.0	0.0	6675.0	-0.0	-0.00
25Y72HR	8.25	6779.9	0.0	6779.9	-0.0	-0.00
25Y72HR	8.33	6885.1	0.0	6885.1	-0.0	-0.00
25Y72HR	8.42	6990.5	0.0	6990.5	-0.0	-0.00

South Roosevelt Blvd.
Mass Balance Report

Simulation	Time hrs	Inflow Volume ft3	Outflow Volume ft3	Change in Sys Storage ft3	Difference ft3	Error %
25Y72HR	8.50	7096.1	0.0	7096.1	-0.0	-0.00
25Y72HR	8.58	7201.9	0.0	7201.9	-0.0	-0.00
25Y72HR	8.67	7307.9	0.9	7307.0	-0.0	-0.00
25Y72HR	8.75	7414.1	5.1	7409.0	-0.0	-0.00
25Y72HR	8.83	7520.5	12.1	7508.4	-0.0	-0.00
25Y72HR	8.92	7627.0	21.1	7605.9	-0.0	-0.00
25Y72HR	9.00	7733.8	31.7	7702.1	-0.0	-0.00
25Y72HR	9.08	7840.7	43.0	7797.7	-0.0	-0.00
25Y72HR	9.17	7947.8	54.7	7893.0	-0.0	-0.00
25Y72HR	9.25	8055.0	66.7	7988.3	-0.0	-0.00
25Y72HR	9.33	8162.5	81.0	8081.5	-0.0	-0.00
25Y72HR	9.42	8270.1	100.0	8170.0	-0.0	-0.00
25Y72HR	9.50	8377.8	124.5	8253.3	-0.0	-0.00
25Y72HR	9.58	8485.7	153.4	8332.3	-0.0	-0.00
25Y72HR	9.67	8593.7	185.9	8407.9	-0.0	-0.00
25Y72HR	9.75	8701.9	221.4	8480.6	-0.0	-0.00
25Y72HR	9.83	8810.3	259.2	8551.1	-0.0	-0.00
25Y72HR	9.92	8918.8	302.6	8616.2	-0.0	-0.00
25Y72HR	10.00	9027.4	353.1	8674.3	-0.0	-0.00
25Y72HR	10.08	9136.2	407.8	8728.4	-0.0	-0.00
25Y72HR	10.17	9245.1	464.7	8780.4	0.0	0.00
25Y72HR	10.25	9354.1	523.0	8831.2	0.0	0.00
25Y72HR	10.33	9463.3	582.0	8881.3	-0.0	-0.00
25Y72HR	10.42	9572.6	641.4	8931.1	-0.0	-0.00
25Y72HR	10.50	9682.0	701.2	8980.8	0.0	0.00
25Y72HR	10.58	9791.5	761.2	9030.4	0.0	0.00
25Y72HR	10.67	9901.2	821.2	9080.0	0.0	0.00
25Y72HR	10.75	10011.0	881.4	9129.6	0.0	0.00
25Y72HR	10.83	10120.9	943.9	9177.0	0.0	0.00
25Y72HR	10.92	10230.9	1020.6	9210.3	0.0	0.00
25Y72HR	11.00	10341.0	1100.9	9240.1	0.0	0.00
25Y72HR	11.08	10451.2	1185.8	9265.5	0.0	0.00
25Y72HR	11.17	10561.6	1274.4	9287.1	0.0	0.00
25Y72HR	11.25	10672.0	1365.1	9306.9	0.0	0.00
25Y72HR	11.33	10782.6	1456.8	9325.8	0.0	0.00
25Y72HR	11.42	10893.2	1549.0	9344.2	0.0	0.00
25Y72HR	11.50	11004.0	1641.6	9362.4	0.0	0.00
25Y72HR	11.58	11114.8	1734.4	9380.5	0.0	0.00
25Y72HR	11.67	11225.8	1827.3	9398.5	0.0	0.00
25Y72HR	11.75	11336.8	1920.4	9416.4	0.0	0.00
25Y72HR	11.83	11448.0	2016.3	9431.6	0.0	0.00
25Y72HR	11.92	11559.2	2115.3	9443.9	0.0	0.00
25Y72HR	12.00	11670.5	2214.3	9456.2	0.0	0.00
25Y72HR	12.08	11781.9	2313.5	9468.4	0.0	0.00
25Y72HR	12.17	11893.4	2412.7	9480.7	0.0	0.00
25Y72HR	12.25	12005.0	2512.0	9493.0	0.0	0.00

South Roosevelt Blvd.
Mass Balance Report

Simulation	Time hrs	Inflow Volume ft3	Outflow Volume ft3	Change in Sys Storage ft3	Difference ft3	Error %
25Y72HR	12.33	12116.7	2611.4	9505.2	0.0	0.00
25Y72HR	12.42	12228.4	2710.9	9517.5	0.0	0.00
25Y72HR	12.50	12340.2	2810.4	9529.8	0.0	0.00
25Y72HR	12.58	12452.2	2910.8	9541.3	0.0	0.00
25Y72HR	12.67	12564.1	3013.4	9550.8	0.0	0.00
25Y72HR	12.75	12676.2	3117.7	9558.5	0.0	0.00
25Y72HR	12.83	12788.4	3223.5	9564.9	0.0	0.00
25Y72HR	12.92	12900.6	3330.4	9570.2	0.0	0.00
25Y72HR	13.00	13012.9	3438.2	9574.7	0.0	0.00
25Y72HR	13.08	13125.2	3546.8	9578.5	0.0	0.00
25Y72HR	13.17	13237.7	3656.0	9581.7	0.0	0.00
25Y72HR	13.25	13350.2	3765.7	9584.5	0.0	0.00
25Y72HR	13.33	13462.8	3875.8	9587.0	0.0	0.00
25Y72HR	13.42	13575.4	3986.3	9589.2	0.0	0.00
25Y72HR	13.50	13688.2	4097.0	9591.1	0.0	0.00
25Y72HR	13.58	13800.9	4208.0	9593.0	0.0	0.00
25Y72HR	13.67	13913.8	4319.2	9594.6	0.0	0.00
25Y72HR	13.75	14026.7	4430.5	9596.2	0.0	0.00
25Y72HR	13.83	14139.7	4542.0	9597.7	0.0	0.00
25Y72HR	13.92	14252.7	4653.7	9599.1	0.0	0.00
25Y72HR	14.00	14365.8	4765.4	9600.4	0.0	0.00
25Y72HR	14.08	14479.0	4877.3	9601.7	0.0	0.00
25Y72HR	14.17	14592.2	4989.2	9603.0	0.0	0.00
25Y72HR	14.25	14705.5	5101.2	9604.3	0.0	0.00
25Y72HR	14.33	14818.8	5213.4	9605.5	0.0	0.00
25Y72HR	14.42	14932.2	5325.5	9606.7	0.0	0.00
25Y72HR	14.50	15045.7	5437.8	9607.9	0.0	0.00
25Y72HR	14.58	15159.2	5550.1	9609.1	0.0	0.00
25Y72HR	14.67	15272.8	5662.5	9610.3	0.0	0.00
25Y72HR	14.75	15386.4	5774.9	9611.5	0.0	0.00
25Y72HR	14.83	15500.1	5887.4	9612.7	0.0	0.00
25Y72HR	14.92	15613.8	6000.0	9613.8	0.0	0.00
25Y72HR	15.00	15727.6	6112.6	9615.0	0.0	0.00
25Y72HR	15.08	15841.4	6225.2	9616.2	0.0	0.00
25Y72HR	15.17	15955.3	6337.9	9617.4	0.0	0.00
25Y72HR	15.25	16069.2	6450.7	9618.5	0.0	0.00
25Y72HR	15.33	16183.2	6563.5	9619.7	0.0	0.00
25Y72HR	15.42	16297.2	6676.3	9620.9	0.0	0.00
25Y72HR	15.50	16411.3	6789.2	9622.1	0.0	0.00
25Y72HR	15.58	16525.4	6902.2	9623.2	0.0	0.00
25Y72HR	15.67	16639.6	7015.2	9624.4	0.0	0.00
25Y72HR	15.75	16753.8	7128.2	9625.6	0.0	0.00
25Y72HR	15.83	16868.0	7241.3	9626.8	0.0	0.00
25Y72HR	15.92	16982.3	7354.4	9628.0	0.0	0.00
25Y72HR	16.00	17096.7	7467.6	9629.1	0.0	0.00
25Y72HR	16.08	17211.1	7580.8	9630.3	0.0	0.00

South Roosevelt Blvd.
Mass Balance Report

Simulation	Time hrs	Inflow Volume ft3	Outflow Volume ft3	Change in Sys Storage ft3	Difference ft3	Error %
25Y72HR	16.17	17325.5	7694.0	9631.5	0.0	0.00
25Y72HR	16.25	17440.0	7807.3	9632.7	0.0	0.00
25Y72HR	16.33	17554.5	7920.6	9633.9	0.0	0.00
25Y72HR	16.42	17669.1	8034.0	9635.1	0.0	0.00
25Y72HR	16.50	17783.7	8147.4	9636.3	0.0	0.00
25Y72HR	16.58	17898.3	8260.8	9637.5	0.0	0.00
25Y72HR	16.67	18013.0	8374.3	9638.7	0.0	0.00
25Y72HR	16.75	18127.7	8487.8	9639.9	0.0	0.00
25Y72HR	16.83	18242.5	8601.4	9641.1	0.0	0.00
25Y72HR	16.92	18357.3	8715.0	9642.3	0.0	0.00
25Y72HR	17.00	18472.1	8828.6	9643.5	0.0	0.00
25Y72HR	17.08	18587.0	8942.3	9644.7	0.0	0.00
25Y72HR	17.17	18701.9	9056.0	9645.9	0.0	0.00
25Y72HR	17.25	18816.8	9169.7	9647.1	0.0	0.00
25Y72HR	17.33	18931.8	9283.5	9648.3	0.0	0.00
25Y72HR	17.42	19046.8	9397.3	9649.5	0.0	0.00
25Y72HR	17.50	19161.8	9511.1	9650.7	0.0	0.00
25Y72HR	17.58	19276.9	9625.0	9651.9	0.0	0.00
25Y72HR	17.67	19392.0	9738.9	9653.1	0.0	0.00
25Y72HR	17.75	19507.2	9852.8	9654.4	0.0	0.00
25Y72HR	17.83	19622.4	9966.8	9655.6	0.0	0.00
25Y72HR	17.92	19737.6	10080.8	9656.8	0.0	0.00
25Y72HR	18.00	19852.8	10194.8	9658.0	0.0	0.00
25Y72HR	18.08	19968.1	10308.9	9659.2	0.0	0.00
25Y72HR	18.17	20083.4	10423.0	9660.5	0.0	0.00
25Y72HR	18.25	20198.8	10537.1	9661.7	0.0	0.00
25Y72HR	18.33	20314.1	10651.2	9662.9	0.0	0.00
25Y72HR	18.42	20429.5	10765.4	9664.1	0.0	0.00
25Y72HR	18.50	20545.0	10879.6	9665.4	0.0	0.00
25Y72HR	18.58	20660.4	10993.9	9666.6	0.0	0.00
25Y72HR	18.67	20775.9	11108.1	9667.8	0.0	0.00
25Y72HR	18.75	20891.5	11222.4	9669.0	0.0	0.00
25Y72HR	18.83	21007.0	11336.7	9670.3	0.0	0.00
25Y72HR	18.92	21122.6	11451.1	9671.5	0.0	0.00
25Y72HR	19.00	21238.2	11565.4	9672.8	0.0	0.00
25Y72HR	19.08	21353.8	11679.8	9674.0	0.0	0.00
25Y72HR	19.17	21469.5	11794.3	9675.2	0.0	0.00
25Y72HR	19.25	21585.2	11908.7	9676.5	0.0	0.00
25Y72HR	19.33	21700.9	12023.3	9677.6	0.0	0.00
25Y72HR	19.42	21816.7	12138.8	9677.8	0.0	0.00
25Y72HR	19.50	21932.4	12254.5	9677.9	0.0	0.00
25Y72HR	19.58	22048.2	12370.3	9677.9	0.0	0.00
25Y72HR	19.67	22164.0	12486.0	9678.0	0.0	0.00
25Y72HR	19.75	22279.9	12601.8	9678.1	0.0	0.00
25Y72HR	19.83	22395.8	12717.6	9678.1	0.0	0.00
25Y72HR	19.92	22511.7	12833.5	9678.2	0.0	0.00

South Roosevelt Blvd.
Mass Balance Report

Simulation	Time hrs	Inflow Volume ft3	Outflow Volume ft3	Change in Sys Storage ft3	Difference ft3	Error %
25Y72HR	20.00	22627.6	12949.3	9678.2	0.0	0.00
25Y72HR	20.08	22743.5	13065.2	9678.3	0.0	0.00
25Y72HR	20.17	22859.5	13181.1	9678.3	0.0	0.00
25Y72HR	20.25	22975.5	13297.1	9678.4	0.0	0.00
25Y72HR	20.33	23091.5	13413.0	9678.5	0.0	0.00
25Y72HR	20.42	23207.5	13529.0	9678.5	0.0	0.00
25Y72HR	20.50	23323.6	13645.0	9678.6	0.0	0.00
25Y72HR	20.58	23439.7	13761.1	9678.6	0.0	0.00
25Y72HR	20.67	23555.8	13877.1	9678.7	0.0	0.00
25Y72HR	20.75	23671.9	13993.2	9678.7	0.0	0.00
25Y72HR	20.83	23788.1	14109.3	9678.8	0.0	0.00
25Y72HR	20.92	23904.3	14225.4	9678.8	0.0	0.00
25Y72HR	21.00	24020.5	14341.6	9678.9	0.0	0.00
25Y72HR	21.08	24136.7	14457.8	9678.9	0.0	0.00
25Y72HR	21.17	24252.9	14573.9	9679.0	0.0	0.00
25Y72HR	21.25	24369.2	14690.2	9679.0	0.0	0.00
25Y72HR	21.33	24485.5	14806.4	9679.1	0.0	0.00
25Y72HR	21.42	24601.8	14922.6	9679.1	0.0	0.00
25Y72HR	21.50	24718.1	15038.9	9679.2	0.0	0.00
25Y72HR	21.58	24834.4	15155.2	9679.2	0.0	0.00
25Y72HR	21.67	24950.8	15271.5	9679.3	0.0	0.00
25Y72HR	21.75	25067.2	15387.9	9679.3	0.0	0.00
25Y72HR	21.83	25183.6	15504.2	9679.4	0.0	0.00
25Y72HR	21.92	25300.0	15620.6	9679.4	0.0	0.00
25Y72HR	22.00	25416.4	15737.0	9679.5	0.0	0.00
25Y72HR	22.08	25532.9	15853.4	9679.5	0.0	0.00
25Y72HR	22.17	25649.4	15969.8	9679.5	0.0	0.00
25Y72HR	22.25	25765.9	16086.3	9679.6	0.0	0.00
25Y72HR	22.33	25882.4	16202.7	9679.6	0.0	0.00
25Y72HR	22.42	25998.9	16319.2	9679.7	0.0	0.00
25Y72HR	22.50	26115.5	16435.7	9679.7	0.0	0.00
25Y72HR	22.58	26232.0	16552.3	9679.8	0.0	0.00
25Y72HR	22.67	26348.6	16668.8	9679.8	0.0	0.00
25Y72HR	22.75	26465.2	16785.4	9679.8	0.0	0.00
25Y72HR	22.83	26581.8	16902.0	9679.9	0.0	0.00
25Y72HR	22.92	26698.5	17018.6	9679.9	0.0	0.00
25Y72HR	23.00	26815.1	17135.2	9680.0	0.0	0.00
25Y72HR	23.08	26931.8	17251.8	9680.0	0.0	0.00
25Y72HR	23.17	27048.5	17368.4	9680.0	0.0	0.00
25Y72HR	23.25	27165.2	17485.1	9680.1	0.0	0.00
25Y72HR	23.33	27281.9	17601.8	9680.1	0.0	0.00
25Y72HR	23.42	27398.6	17718.5	9680.2	0.0	0.00
25Y72HR	23.50	27515.4	17835.2	9680.2	0.0	0.00
25Y72HR	23.58	27632.2	17951.9	9680.2	0.0	0.00
25Y72HR	23.67	27748.9	18068.7	9680.3	0.0	0.00
25Y72HR	23.75	27865.7	18185.4	9680.3	0.0	0.00

South Roosevelt Blvd.
Mass Balance Report

Simulation	Time hrs	Inflow Volume ft3	Outflow Volume ft3	Change in Sys Storage ft3	Difference ft3	Error %
25Y72HR	23.83	27982.6	18302.2	9680.3	0.0	0.00
25Y72HR	23.92	28099.4	18419.0	9680.4	0.0	0.00
25Y72HR	24.00	28216.3	18535.8	9680.4	0.0	0.00
25Y72HR	24.08	28337.1	18653.2	9683.9	0.0	0.00
25Y72HR	24.17	28469.1	18773.8	9695.2	0.0	0.00
25Y72HR	24.25	28613.0	18901.5	9711.5	0.0	0.00
25Y72HR	24.33	28765.0	19037.3	9727.6	0.0	0.00
25Y72HR	24.42	28922.3	19180.5	9741.8	0.0	0.00
25Y72HR	24.50	29083.3	19329.7	9753.6	0.0	0.00
25Y72HR	24.58	29247.2	19483.8	9763.4	0.0	0.00
25Y72HR	24.67	29413.4	19641.7	9771.6	0.0	0.00
25Y72HR	24.75	29581.2	19802.8	9778.4	0.0	0.00
25Y72HR	24.83	29750.1	19966.3	9783.7	0.0	0.00
25Y72HR	24.92	29919.6	20131.7	9787.9	0.0	0.00
25Y72HR	25.00	30089.5	20298.5	9791.1	0.0	0.00
25Y72HR	25.08	30259.5	20466.2	9793.4	0.0	0.00
25Y72HR	25.17	30429.6	20634.5	9795.1	0.0	0.00
25Y72HR	25.25	30599.7	20803.3	9796.3	0.0	0.00
25Y72HR	25.33	30769.8	20972.4	9797.3	0.0	0.00
25Y72HR	25.42	30939.9	21141.8	9798.1	-0.0	-0.00
25Y72HR	25.50	31110.0	21311.3	9798.7	-0.0	-0.00
25Y72HR	25.58	31280.2	21480.9	9799.3	-0.0	-0.00
25Y72HR	25.67	31450.4	21650.7	9799.7	-0.0	-0.00
25Y72HR	25.75	31620.6	21820.5	9800.1	-0.0	-0.00
25Y72HR	25.83	31790.9	21990.4	9800.4	-0.0	-0.00
25Y72HR	25.92	31961.1	22160.4	9800.7	-0.0	-0.00
25Y72HR	26.00	32131.4	22330.4	9801.0	-0.0	-0.00
25Y72HR	26.08	32301.7	22500.5	9801.2	-0.0	-0.00
25Y72HR	26.17	32472.1	22670.6	9801.5	-0.0	-0.00
25Y72HR	26.25	32642.4	22840.8	9801.7	-0.0	-0.00
25Y72HR	26.33	32812.8	23010.9	9801.9	-0.0	-0.00
25Y72HR	26.42	32983.2	23181.1	9802.1	-0.0	-0.00
25Y72HR	26.50	33153.7	23351.4	9802.3	-0.0	-0.00
25Y72HR	26.58	33324.1	23521.6	9802.5	-0.0	-0.00
25Y72HR	26.67	33494.6	23691.9	9802.7	-0.0	-0.00
25Y72HR	26.75	33665.1	23862.2	9802.8	-0.0	-0.00
25Y72HR	26.83	33835.6	24032.6	9803.0	-0.0	-0.00
25Y72HR	26.92	34006.1	24202.9	9803.2	-0.0	-0.00
25Y72HR	27.00	34176.7	24373.3	9803.4	-0.0	-0.00
25Y72HR	27.08	34347.3	24543.7	9803.5	-0.0	-0.00
25Y72HR	27.17	34517.9	24714.1	9803.7	-0.0	-0.00
25Y72HR	27.25	34688.5	24884.6	9803.9	-0.0	-0.00
25Y72HR	27.33	34859.1	25055.0	9804.1	-0.0	-0.00
25Y72HR	27.42	35029.8	25225.5	9804.2	-0.0	-0.00
25Y72HR	27.50	35200.4	25396.0	9804.4	-0.0	-0.00
25Y72HR	27.58	35371.1	25566.5	9804.6	-0.0	-0.00

South Roosevelt Blvd.
Mass Balance Report

Simulation	Time hrs	Inflow Volume ft3	Outflow Volume ft3	Change in Sys Storage ft3	Difference ft3	Error %
25Y72HR	27.67	35541.8	25737.1	9804.8	-0.0	-0.00
25Y72HR	27.75	35712.6	25907.6	9804.9	-0.0	-0.00
25Y72HR	27.83	35883.3	26078.2	9805.1	-0.0	-0.00
25Y72HR	27.92	36054.1	26248.8	9805.3	-0.0	-0.00
25Y72HR	28.00	36224.9	26419.4	9805.4	-0.0	-0.00
25Y72HR	28.08	36395.7	26590.0	9805.6	-0.0	-0.00
25Y72HR	28.17	36566.5	26760.7	9805.8	-0.0	-0.00
25Y72HR	28.25	36737.3	26931.4	9806.0	-0.0	-0.00
25Y72HR	28.33	36908.2	27102.0	9806.1	-0.0	-0.00
25Y72HR	28.42	37079.1	27272.7	9806.3	-0.0	-0.00
25Y72HR	28.50	37249.9	27443.5	9806.5	-0.0	-0.00
25Y72HR	28.58	37420.8	27614.2	9806.7	-0.0	-0.00
25Y72HR	28.67	37591.8	27784.9	9806.8	-0.0	-0.00
25Y72HR	28.75	37762.7	27955.7	9807.0	-0.0	-0.00
25Y72HR	28.83	37933.7	28126.5	9807.2	-0.0	-0.00
25Y72HR	28.92	38104.6	28297.3	9807.4	-0.0	-0.00
25Y72HR	29.00	38275.6	28468.1	9807.5	-0.0	-0.00
25Y72HR	29.08	38446.6	28638.9	9807.7	-0.0	-0.00
25Y72HR	29.17	38617.6	28809.7	9807.9	-0.0	-0.00
25Y72HR	29.25	38788.7	28980.6	9808.1	-0.0	-0.00
25Y72HR	29.33	38959.7	29151.5	9808.2	-0.0	-0.00
25Y72HR	29.42	39130.8	29322.4	9808.4	-0.0	-0.00
25Y72HR	29.50	39301.8	29493.3	9808.6	-0.0	-0.00
25Y72HR	29.58	39472.9	29664.2	9808.8	-0.0	-0.00
25Y72HR	29.67	39644.0	29835.1	9808.9	-0.0	-0.00
25Y72HR	29.75	39815.2	30006.0	9809.1	-0.0	-0.00
25Y72HR	29.83	39986.3	30177.0	9809.3	-0.0	-0.00
25Y72HR	29.92	40157.4	30348.0	9809.5	-0.0	-0.00
25Y72HR	30.00	40328.6	30518.9	9809.6	-0.0	-0.00
25Y72HR	30.08	40499.8	30689.9	9809.8	-0.0	-0.00
25Y72HR	30.17	40671.0	30861.0	9810.0	-0.0	-0.00
25Y72HR	30.25	40842.2	31032.0	9810.2	-0.0	-0.00
25Y72HR	30.33	41013.4	31203.0	9810.4	-0.0	-0.00
25Y72HR	30.42	41184.6	31374.1	9810.5	-0.0	-0.00
25Y72HR	30.50	41355.8	31545.1	9810.7	-0.0	-0.00
25Y72HR	30.58	41527.1	31716.2	9810.9	-0.0	-0.00
25Y72HR	30.67	41698.4	31887.3	9811.1	-0.0	-0.00
25Y72HR	30.75	41869.6	32058.4	9811.2	-0.0	-0.00
25Y72HR	30.83	42040.9	32229.5	9811.4	-0.0	-0.00
25Y72HR	30.92	42212.2	32400.6	9811.6	-0.0	-0.00
25Y72HR	31.00	42383.5	32571.8	9811.8	-0.0	-0.00
25Y72HR	31.08	42554.9	32742.9	9812.0	-0.0	-0.00
25Y72HR	31.17	42726.2	32914.1	9812.1	-0.0	-0.00
25Y72HR	31.25	42897.6	33085.2	9812.3	-0.0	-0.00
25Y72HR	31.33	43068.9	33256.4	9812.5	-0.0	-0.00
25Y72HR	31.42	43240.3	33427.6	9812.7	-0.0	-0.00

South Roosevelt Blvd.
Mass Balance Report

Simulation	Time hrs	Inflow Volume ft3	Outflow Volume ft3	Change in Sys Storage ft3	Difference ft3	Error %
25Y72HR	31.50	43411.7	33598.8	9812.9	-0.0	-0.00
25Y72HR	31.58	43583.1	33770.0	9813.0	-0.0	-0.00
25Y72HR	31.67	43754.5	33941.3	9813.2	-0.0	-0.00
25Y72HR	31.75	43925.9	34112.5	9813.4	-0.0	-0.00
25Y72HR	31.83	44097.4	34283.8	9813.6	-0.0	-0.00
25Y72HR	31.92	44268.8	34455.0	9813.8	-0.0	-0.00
25Y72HR	32.00	44440.2	34626.3	9813.9	-0.0	-0.00
25Y72HR	32.08	44611.7	34797.6	9814.1	-0.0	-0.00
25Y72HR	32.17	44783.2	34968.9	9814.3	-0.0	-0.00
25Y72HR	32.25	44954.7	35140.2	9814.5	-0.0	-0.00
25Y72HR	32.33	45126.2	35311.5	9814.7	-0.0	-0.00
25Y72HR	32.42	45297.7	35482.8	9814.9	-0.0	-0.00
25Y72HR	32.50	45469.2	35654.2	9815.0	-0.0	-0.00
25Y72HR	32.58	45640.7	35825.5	9815.2	-0.0	-0.00
25Y72HR	32.67	45812.3	35996.9	9815.4	-0.0	-0.00
25Y72HR	32.75	45983.8	36168.2	9815.6	-0.0	-0.00
25Y72HR	32.83	46155.4	36339.6	9815.8	-0.0	-0.00
25Y72HR	32.92	46326.9	36511.0	9815.9	-0.0	-0.00
25Y72HR	33.00	46498.5	36682.4	9816.1	-0.0	-0.00
25Y72HR	33.08	46670.1	36853.8	9816.3	-0.0	-0.00
25Y72HR	33.17	46841.7	37025.2	9816.5	-0.0	-0.00
25Y72HR	33.25	47013.3	37196.6	9816.7	-0.0	-0.00
25Y72HR	33.33	47184.9	37368.0	9816.9	-0.0	-0.00
25Y72HR	33.42	47356.5	37539.5	9817.0	-0.0	-0.00
25Y72HR	33.50	47528.2	37710.9	9817.2	-0.0	-0.00
25Y72HR	33.58	47699.8	37882.4	9817.4	-0.0	-0.00
25Y72HR	33.67	47871.5	38053.9	9817.6	-0.0	-0.00
25Y72HR	33.75	48043.1	38225.3	9817.8	-0.0	-0.00
25Y72HR	33.83	48214.8	38396.8	9818.0	-0.0	-0.00
25Y72HR	33.92	48386.5	38568.3	9818.1	-0.0	-0.00
25Y72HR	34.00	48558.2	38739.8	9818.3	-0.0	-0.00
25Y72HR	34.08	48729.9	38911.3	9818.5	-0.0	-0.00
25Y72HR	34.17	48901.6	39082.9	9818.7	-0.0	-0.00
25Y72HR	34.25	49073.3	39254.4	9818.9	-0.0	-0.00
25Y72HR	34.33	49245.0	39425.9	9819.1	-0.0	-0.00
25Y72HR	34.42	49416.7	39597.5	9819.3	-0.0	-0.00
25Y72HR	34.50	49588.5	39769.0	9819.4	-0.0	-0.00
25Y72HR	34.58	49760.2	39940.6	9819.6	-0.0	-0.00
25Y72HR	34.67	49932.0	40112.1	9819.8	-0.0	-0.00
25Y72HR	34.75	50103.7	40283.7	9820.0	-0.0	-0.00
25Y72HR	34.83	50275.5	40455.3	9820.2	-0.0	-0.00
25Y72HR	34.92	50447.3	40626.9	9820.4	-0.0	-0.00
25Y72HR	35.00	50619.1	40798.5	9820.6	-0.0	-0.00
25Y72HR	35.08	50790.9	40970.1	9820.7	-0.0	-0.00
25Y72HR	35.17	50962.7	41141.7	9820.9	-0.0	-0.00
25Y72HR	35.25	51134.5	41313.3	9821.1	-0.0	-0.00

South Roosevelt Blvd.
Mass Balance Report

Simulation	Time hrs	Inflow Volume ft3	Outflow Volume ft3	Change in Sys Storage ft3	Difference ft3	Error %
25Y72HR	35.33	51306.3	41485.0	9821.3	-0.0	-0.00
25Y72HR	35.42	51478.1	41656.6	9821.5	-0.0	-0.00
25Y72HR	35.50	51649.9	41828.3	9821.7	-0.0	-0.00
25Y72HR	35.58	51821.8	41999.9	9821.9	-0.0	-0.00
25Y72HR	35.67	51993.6	42171.6	9822.1	-0.0	-0.00
25Y72HR	35.75	52165.5	42343.2	9822.2	-0.0	-0.00
25Y72HR	35.83	52337.3	42514.9	9822.4	-0.0	-0.00
25Y72HR	35.92	52509.2	42686.6	9822.6	-0.0	-0.00
25Y72HR	36.00	52681.1	42858.3	9822.8	-0.0	-0.00
25Y72HR	36.08	52853.1	43030.0	9823.1	-0.0	-0.00
25Y72HR	36.17	53025.5	43201.8	9823.7	-0.0	-0.00
25Y72HR	36.25	53198.3	43373.9	9824.4	-0.0	-0.00
25Y72HR	36.33	53371.3	43546.2	9825.1	-0.0	-0.00
25Y72HR	36.42	53544.6	43718.8	9825.7	-0.0	-0.00
25Y72HR	36.50	53718.0	43891.6	9826.3	-0.0	-0.00
25Y72HR	36.58	53891.5	44064.6	9826.9	-0.0	-0.00
25Y72HR	36.67	54065.0	44237.7	9827.4	-0.0	-0.00
25Y72HR	36.75	54238.7	44410.8	9827.8	-0.0	-0.00
25Y72HR	36.83	54412.3	44584.1	9828.2	-0.0	-0.00
25Y72HR	36.92	54586.0	44757.4	9828.6	-0.0	-0.00
25Y72HR	37.00	54759.7	44930.8	9828.9	-0.0	-0.00
25Y72HR	37.08	54933.5	45104.2	9829.3	-0.0	-0.00
25Y72HR	37.17	55107.2	45277.7	9829.6	-0.0	-0.00
25Y72HR	37.25	55280.9	45451.1	9829.8	-0.0	-0.00
25Y72HR	37.33	55454.7	45624.6	9830.1	-0.0	-0.00
25Y72HR	37.42	55628.4	45798.0	9830.4	-0.0	-0.00
25Y72HR	37.50	55802.2	45971.5	9830.7	-0.0	-0.00
25Y72HR	37.58	55976.0	46145.0	9830.9	-0.0	-0.00
25Y72HR	37.67	56149.7	46318.5	9831.2	-0.0	-0.00
25Y72HR	37.75	56323.5	46492.1	9831.5	-0.0	-0.00
25Y72HR	37.83	56497.3	46665.6	9831.7	-0.0	-0.00
25Y72HR	37.92	56671.1	46839.1	9832.0	-0.0	-0.00
25Y72HR	38.00	56844.9	47012.6	9832.3	-0.0	-0.00
25Y72HR	38.08	57018.7	47186.2	9832.5	-0.0	-0.00
25Y72HR	38.17	57192.5	47359.7	9832.8	-0.0	-0.00
25Y72HR	38.25	57366.3	47533.3	9833.0	-0.0	-0.00
25Y72HR	38.33	57540.1	47706.8	9833.3	-0.0	-0.00
25Y72HR	38.42	57714.0	47880.4	9833.6	-0.0	-0.00
25Y72HR	38.50	57887.8	48054.0	9833.8	-0.0	-0.00
25Y72HR	38.58	58061.6	48227.6	9834.1	-0.0	-0.00
25Y72HR	38.67	58235.5	48401.1	9834.3	-0.0	-0.00
25Y72HR	38.75	58409.3	48574.7	9834.6	-0.0	-0.00
25Y72HR	38.83	58583.2	48748.3	9834.8	-0.0	-0.00
25Y72HR	38.92	58757.0	48921.9	9835.1	-0.0	-0.00
25Y72HR	39.00	58930.9	49095.5	9835.4	-0.0	-0.00
25Y72HR	39.08	59104.8	49269.1	9835.6	-0.0	-0.00

South Roosevelt Blvd.
Mass Balance Report

Simulation	Time hrs	Inflow Volume ft3	Outflow Volume ft3	Change in Sys Storage ft3	Difference ft3	Error %
25Y72HR	39.17	59278.6	49442.8	9835.9	-0.0	-0.00
25Y72HR	39.25	59452.5	49616.4	9836.1	-0.0	-0.00
25Y72HR	39.33	59626.4	49790.0	9836.4	-0.0	-0.00
25Y72HR	39.42	59800.3	49963.6	9836.7	-0.0	-0.00
25Y72HR	39.50	59974.2	50137.3	9836.9	-0.0	-0.00
25Y72HR	39.58	60148.1	50310.9	9837.2	-0.0	-0.00
25Y72HR	39.67	60322.0	50484.6	9837.4	-0.0	-0.00
25Y72HR	39.75	60495.9	50658.2	9837.7	-0.0	-0.00
25Y72HR	39.83	60669.8	50831.9	9838.0	-0.0	-0.00
25Y72HR	39.92	60843.8	51005.5	9838.2	-0.0	-0.00
25Y72HR	40.00	61017.7	51179.2	9838.5	-0.0	-0.00
25Y72HR	40.08	61191.6	51352.9	9838.8	-0.0	-0.00
25Y72HR	40.17	61365.6	51526.5	9839.0	-0.0	-0.00
25Y72HR	40.25	61539.5	51700.2	9839.3	-0.0	-0.00
25Y72HR	40.33	61713.4	51873.9	9839.5	-0.0	-0.00
25Y72HR	40.42	61887.4	52047.6	9839.8	-0.0	-0.00
25Y72HR	40.50	62061.4	52221.3	9840.1	-0.0	-0.00
25Y72HR	40.58	62235.3	52395.0	9840.3	-0.0	-0.00
25Y72HR	40.67	62409.3	52568.7	9840.6	-0.0	-0.00
25Y72HR	40.75	62583.3	52742.4	9840.8	-0.0	-0.00
25Y72HR	40.83	62757.2	52916.1	9841.1	-0.0	-0.00
25Y72HR	40.92	62931.2	53089.8	9841.4	-0.0	-0.00
25Y72HR	41.00	63105.2	53263.6	9841.6	-0.0	-0.00
25Y72HR	41.08	63279.2	53437.3	9841.9	-0.0	-0.00
25Y72HR	41.17	63453.2	53611.0	9842.2	-0.0	-0.00
25Y72HR	41.25	63627.2	53784.8	9842.4	-0.0	-0.00
25Y72HR	41.33	63801.2	53958.5	9842.7	-0.0	-0.00
25Y72HR	41.42	63975.2	54132.2	9842.9	-0.0	-0.00
25Y72HR	41.50	64149.2	54306.0	9843.2	-0.0	-0.00
25Y72HR	41.58	64323.2	54479.7	9843.5	-0.0	-0.00
25Y72HR	41.67	64497.2	54653.5	9843.7	-0.0	-0.00
25Y72HR	41.75	64671.3	54827.3	9844.0	-0.0	-0.00
25Y72HR	41.83	64845.3	55001.0	9844.3	-0.0	-0.00
25Y72HR	41.92	65019.3	55174.8	9844.5	-0.0	-0.00
25Y72HR	42.00	65193.3	55348.6	9844.8	-0.0	-0.00
25Y72HR	42.08	65367.4	55522.3	9845.0	-0.0	-0.00
25Y72HR	42.17	65541.4	55696.1	9845.3	-0.0	-0.00
25Y72HR	42.25	65715.5	55869.9	9845.6	-0.0	-0.00
25Y72HR	42.33	65889.5	56043.7	9845.8	-0.0	-0.00
25Y72HR	42.42	66063.6	56217.5	9846.1	-0.0	-0.00
25Y72HR	42.50	66237.7	56391.3	9846.4	-0.0	-0.00
25Y72HR	42.58	66411.7	56565.1	9846.6	-0.0	-0.00
25Y72HR	42.67	66585.8	56738.9	9846.9	-0.0	-0.00
25Y72HR	42.75	66759.9	56912.7	9847.2	-0.0	-0.00
25Y72HR	42.83	66933.9	57086.5	9847.4	-0.0	-0.00
25Y72HR	42.92	67108.0	57260.3	9847.7	-0.0	-0.00

South Roosevelt Blvd.
Mass Balance Report

Simulation	Time hrs	Inflow Volume ft3	Outflow Volume ft3	Change in Sys Storage ft3	Difference ft3	Error %
25Y72HR	43.00	67282.1	57434.2	9848.0	-0.0	-0.00
25Y72HR	43.08	67456.2	57608.0	9848.2	-0.0	-0.00
25Y72HR	43.17	67630.3	57781.8	9848.5	-0.0	-0.00
25Y72HR	43.25	67804.4	57955.6	9848.7	-0.0	-0.00
25Y72HR	43.33	67978.5	58129.5	9849.0	-0.0	-0.00
25Y72HR	43.42	68152.6	58303.3	9849.3	-0.0	-0.00
25Y72HR	43.50	68326.7	58477.2	9849.5	-0.0	-0.00
25Y72HR	43.58	68500.8	58651.0	9849.8	-0.0	-0.00
25Y72HR	43.67	68674.9	58824.8	9850.1	-0.0	-0.00
25Y72HR	43.75	68849.0	58998.7	9850.3	0.0	0.00
25Y72HR	43.83	69023.2	59172.6	9850.6	-0.0	-0.00
25Y72HR	43.92	69197.3	59346.4	9850.9	-0.0	-0.00
25Y72HR	44.00	69371.4	59520.3	9851.1	-0.0	-0.00
25Y72HR	44.08	69545.6	59694.2	9851.4	-0.0	-0.00
25Y72HR	44.17	69719.7	59868.0	9851.7	-0.0	-0.00
25Y72HR	44.25	69893.8	60041.9	9851.9	-0.0	-0.00
25Y72HR	44.33	70068.0	60215.8	9852.2	-0.0	-0.00
25Y72HR	44.42	70242.1	60389.7	9852.5	-0.0	-0.00
25Y72HR	44.50	70416.3	60563.5	9852.7	-0.0	-0.00
25Y72HR	44.58	70590.4	60737.4	9853.0	-0.0	-0.00
25Y72HR	44.67	70764.6	60911.3	9853.3	-0.0	-0.00
25Y72HR	44.75	70938.7	61085.2	9853.5	-0.0	-0.00
25Y72HR	44.83	71112.9	61259.1	9853.8	-0.0	-0.00
25Y72HR	44.92	71287.1	61433.0	9854.1	-0.0	-0.00
25Y72HR	45.00	71461.2	61606.9	9854.3	-0.0	-0.00
25Y72HR	45.08	71635.4	61780.8	9854.6	-0.0	-0.00
25Y72HR	45.17	71809.6	61954.7	9854.9	0.0	0.00
25Y72HR	45.25	71983.8	62128.6	9855.1	0.0	0.00
25Y72HR	45.33	72158.0	62302.6	9855.4	0.0	0.00
25Y72HR	45.42	72332.1	62476.5	9855.7	0.0	0.00
25Y72HR	45.50	72506.3	62650.4	9855.9	-0.0	-0.00
25Y72HR	45.58	72680.5	62824.3	9856.2	-0.0	-0.00
25Y72HR	45.67	72854.7	62998.3	9856.5	-0.0	-0.00
25Y72HR	45.75	73028.9	63172.2	9856.7	-0.0	-0.00
25Y72HR	45.83	73203.1	63346.1	9857.0	0.0	0.00
25Y72HR	45.92	73377.3	63520.1	9857.3	0.0	0.00
25Y72HR	46.00	73551.5	63694.0	9857.5	0.0	0.00
25Y72HR	46.08	73725.8	63867.9	9857.8	0.0	0.00
25Y72HR	46.17	73900.0	64041.9	9858.1	0.0	0.00
25Y72HR	46.25	74074.2	64215.8	9858.3	0.0	0.00
25Y72HR	46.33	74248.4	64389.8	9858.6	0.0	0.00
25Y72HR	46.42	74422.6	64563.7	9858.9	0.0	0.00
25Y72HR	46.50	74596.9	64737.7	9859.2	0.0	0.00
25Y72HR	46.58	74771.1	64911.7	9859.4	0.0	0.00
25Y72HR	46.67	74945.3	65085.6	9859.7	0.0	0.00
25Y72HR	46.75	75119.6	65259.6	9860.0	0.0	0.00

South Roosevelt Blvd.
Mass Balance Report

Simulation	Time hrs	Inflow Volume ft3	Outflow Volume ft3	Change in Sys Storage ft3	Difference ft3	Error %
25Y72HR	46.83	75293.8	65433.6	9860.2	0.0	0.00
25Y72HR	46.92	75468.0	65607.5	9860.5	0.0	0.00
25Y72HR	47.00	75642.3	65781.5	9860.8	0.0	0.00
25Y72HR	47.08	75816.5	65955.5	9861.0	0.0	0.00
25Y72HR	47.17	75990.8	66129.5	9861.3	0.0	0.00
25Y72HR	47.25	76165.0	66303.5	9861.6	0.0	0.00
25Y72HR	47.33	76339.3	66477.4	9861.8	0.0	0.00
25Y72HR	47.42	76513.5	66651.4	9862.1	0.0	0.00
25Y72HR	47.50	76687.8	66825.4	9862.4	0.0	0.00
25Y72HR	47.58	76862.1	66999.4	9862.7	0.0	0.00
25Y72HR	47.67	77036.3	67173.4	9862.9	0.0	0.00
25Y72HR	47.75	77210.6	67347.4	9863.2	0.0	0.00
25Y72HR	47.83	77384.9	67521.4	9863.5	0.0	0.00
25Y72HR	47.92	77559.2	67695.4	9863.7	0.0	0.00
25Y72HR	48.00	77733.4	67869.4	9864.0	0.0	0.00
25Y72HR	48.08	77909.0	68043.6	9865.4	0.0	0.00
25Y72HR	48.17	78088.5	68219.0	9869.5	0.0	0.00
25Y72HR	48.25	78272.5	68397.0	9875.5	0.0	0.00
25Y72HR	48.33	78459.5	68577.9	9881.6	0.0	0.00
25Y72HR	48.42	78648.5	68761.4	9887.1	0.0	0.00
25Y72HR	48.50	78838.8	68946.9	9891.9	0.0	0.00
25Y72HR	48.58	79030.2	69134.1	9896.1	0.0	0.00
25Y72HR	48.67	79222.5	69322.6	9899.9	0.0	0.00
25Y72HR	48.75	79415.3	69512.0	9903.3	0.0	0.00
25Y72HR	48.83	79608.6	69702.3	9906.3	0.0	0.00
25Y72HR	48.92	79802.1	69893.2	9908.9	0.0	0.00
25Y72HR	49.00	79995.7	70084.5	9911.2	0.0	0.00
25Y72HR	49.08	80189.6	70276.1	9913.5	0.0	0.00
25Y72HR	49.17	80384.4	70468.2	9916.2	0.0	0.00
25Y72HR	49.25	80580.1	70660.9	9919.2	0.0	0.00
25Y72HR	49.33	80776.4	70854.3	9922.1	0.0	0.00
25Y72HR	49.42	80973.2	71048.3	9924.9	0.0	0.00
25Y72HR	49.50	81170.3	71242.8	9927.4	0.0	0.00
25Y72HR	49.58	81367.5	71437.7	9929.9	0.0	0.00
25Y72HR	49.67	81565.0	71632.9	9932.1	0.0	0.00
25Y72HR	49.75	81762.6	71828.3	9934.3	0.0	0.00
25Y72HR	49.83	81960.3	72023.9	9936.4	0.0	0.00
25Y72HR	49.92	82158.0	72219.6	9938.4	0.0	0.00
25Y72HR	50.00	82355.8	72415.4	9940.4	0.0	0.00
25Y72HR	50.08	82556.3	72611.7	9944.6	0.0	0.00
25Y72HR	50.17	82764.4	72810.5	9953.9	0.0	0.00
25Y72HR	50.25	82980.5	73014.2	9966.3	0.0	0.00
25Y72HR	50.33	83202.0	73223.3	9978.7	0.0	0.00
25Y72HR	50.42	83427.1	73437.0	9990.1	0.0	0.00
25Y72HR	50.50	83654.7	73654.3	10000.4	0.0	0.00
25Y72HR	50.58	83884.2	73874.5	10009.7	0.0	0.00

South Roosevelt Blvd.
Mass Balance Report

Simulation	Time hrs	Inflow Volume ft3	Outflow Volume ft3	Change in Sys Storage ft3	Difference ft3	Error %
25Y72HR	50.67	84115.3	74097.2	10018.0	0.0	0.00
25Y72HR	50.75	84347.4	74325.3	10022.1	0.0	0.00
25Y72HR	50.83	84580.2	74555.2	10025.0	0.0	0.00
25Y72HR	50.92	84813.5	74786.2	10027.3	0.0	0.00
25Y72HR	51.00	85047.0	75018.0	10029.0	0.0	0.00
25Y72HR	51.08	85282.1	75250.6	10031.5	0.0	0.00
25Y72HR	51.17	85521.7	75485.1	10036.6	0.0	0.00
25Y72HR	51.25	85766.2	75723.0	10043.2	0.0	0.00
25Y72HR	51.33	86013.8	75964.5	10049.3	0.0	0.00
25Y72HR	51.42	86263.6	76209.1	10054.4	0.0	0.00
25Y72HR	51.50	86514.8	76456.2	10058.7	0.0	0.00
25Y72HR	51.58	86767.2	76705.1	10062.1	0.0	0.00
25Y72HR	51.67	87020.6	76955.5	10065.0	0.0	0.00
25Y72HR	51.75	87274.5	77207.2	10067.4	0.0	0.00
25Y72HR	51.83	87528.9	77459.7	10069.2	0.0	0.00
25Y72HR	51.92	87783.6	77712.9	10070.7	0.0	0.00
25Y72HR	52.00	88038.4	77966.6	10071.8	0.0	0.00
25Y72HR	52.08	88298.9	78221.6	10077.3	0.0	0.00
25Y72HR	52.17	88575.5	78482.5	10093.0	0.0	0.00
25Y72HR	52.25	88869.6	78755.1	10114.5	0.0	0.00
25Y72HR	52.33	89175.4	79040.4	10135.0	0.0	0.00
25Y72HR	52.42	89489.0	79336.4	10152.5	0.0	0.00
25Y72HR	52.50	89808.0	79641.0	10166.9	0.0	0.00
25Y72HR	52.58	90131.1	79952.3	10178.8	0.0	0.00
25Y72HR	52.67	90457.5	80268.8	10188.7	0.0	0.00
25Y72HR	52.75	90786.3	80589.5	10196.8	0.0	0.00
25Y72HR	52.83	91116.6	80913.4	10203.2	0.0	0.00
25Y72HR	52.92	91447.9	81239.8	10208.1	0.0	0.00
25Y72HR	53.00	91779.7	81567.9	10211.8	0.0	0.00
25Y72HR	53.08	92117.1	81898.0	10219.1	0.0	0.00
25Y72HR	53.17	92470.6	82234.6	10236.0	0.0	0.00
25Y72HR	53.25	92841.6	82583.4	10258.2	0.0	0.00
25Y72HR	53.33	93224.4	82945.2	10279.2	0.0	0.00
25Y72HR	53.42	93615.0	83317.8	10297.2	0.0	0.00
25Y72HR	53.50	94011.0	83699.0	10312.0	0.0	0.00
25Y72HR	53.58	94411.2	84086.9	10324.3	0.0	0.00
25Y72HR	53.67	94814.6	84480.1	10334.6	0.0	0.00
25Y72HR	53.75	95220.5	84877.5	10342.9	0.0	0.00
25Y72HR	53.83	95627.9	85278.3	10349.6	0.0	0.00
25Y72HR	53.92	96036.3	85681.5	10354.7	0.0	0.00
25Y72HR	54.00	96445.1	86086.6	10358.6	0.0	0.00
25Y72HR	54.08	96859.7	86493.7	10366.0	0.0	0.00
25Y72HR	54.17	97290.9	86907.6	10383.3	0.0	0.00
25Y72HR	54.25	97740.2	87334.1	10406.2	0.0	0.00
25Y72HR	54.33	98201.8	87774.0	10427.8	0.0	0.00
25Y72HR	54.42	98671.4	88225.3	10446.1	0.0	0.00

South Roosevelt Blvd.
Mass Balance Report

Simulation	Time hrs	Inflow Volume ft3	Outflow Volume ft3	Change in Sys Storage ft3	Difference ft3	Error %
25Y72HR	54.50	99146.7	88685.6	10461.1	0.0	0.00
25Y72HR	54.58	99626.4	89152.8	10473.6	0.0	0.00
25Y72HR	54.67	100109.4	89625.5	10483.8	0.0	0.00
25Y72HR	54.75	100594.9	90102.6	10492.2	0.0	0.00
25Y72HR	54.83	101082.0	90583.3	10498.7	0.0	0.00
25Y72HR	54.92	101570.1	91066.5	10503.7	0.0	0.00
25Y72HR	55.00	102058.8	91551.5	10507.3	0.0	0.00
25Y72HR	55.08	102553.1	92038.6	10514.5	0.0	0.00
25Y72HR	55.17	103063.8	92532.5	10531.3	0.0	0.00
25Y72HR	55.25	103592.9	93038.6	10554.3	0.0	0.00
25Y72HR	55.33	104134.1	93557.0	10577.1	0.0	0.00
25Y72HR	55.42	104683.5	94086.3	10597.2	0.0	0.00
25Y72HR	55.50	105238.6	94624.3	10614.3	0.0	0.00
25Y72HR	55.58	105798.0	95169.7	10628.3	0.0	0.00
25Y72HR	55.67	106360.8	95720.9	10639.9	0.0	0.00
25Y72HR	55.75	106926.1	96276.8	10649.3	0.0	0.00
25Y72HR	55.83	107493.1	96836.3	10656.7	0.0	0.00
25Y72HR	55.92	108061.0	97398.6	10662.5	0.0	0.00
25Y72HR	56.00	108629.5	97962.7	10666.8	0.0	0.00
25Y72HR	56.08	109204.6	98529.3	10675.3	0.0	0.00
25Y72HR	56.17	109799.4	99103.5	10695.8	0.0	0.00
25Y72HR	56.25	110416.1	99692.4	10723.7	0.0	0.00
25Y72HR	56.33	111047.6	100297.0	10750.6	0.0	0.00
25Y72HR	56.42	111688.9	100915.1	10773.7	0.0	0.00
25Y72HR	56.50	112337.0	101544.1	10793.0	0.0	0.00
25Y72HR	56.58	112990.3	102181.5	10808.9	0.0	0.00
25Y72HR	56.67	113647.8	102825.7	10822.1	0.0	0.00
25Y72HR	56.75	114308.2	103475.3	10832.9	0.0	0.00
25Y72HR	56.83	114970.6	104129.1	10841.5	0.0	0.00
25Y72HR	56.92	115634.3	104786.1	10848.1	0.0	0.00
25Y72HR	57.00	116298.5	105445.4	10853.1	0.0	0.00
25Y72HR	57.08	116971.2	106107.6	10863.6	0.0	0.00
25Y72HR	57.17	117668.8	106779.2	10889.6	0.0	0.00
25Y72HR	57.25	118394.7	107469.5	10925.1	0.0	0.00
25Y72HR	57.33	119139.5	108179.9	10959.6	0.0	0.00
25Y72HR	57.42	119897.0	108907.6	10989.4	0.0	0.00
25Y72HR	57.50	120663.4	109649.0	11014.4	0.0	0.00
25Y72HR	57.58	121441.3	110402.5	11038.9	0.0	0.00
25Y72HR	57.67	122238.6	111169.8	11068.8	0.0	0.00
25Y72HR	57.75	123055.2	111954.0	11101.3	0.0	0.00
25Y72HR	57.83	123884.7	112753.7	11131.0	0.0	0.00
25Y72HR	57.92	124722.6	113567.2	11155.4	0.0	0.00
25Y72HR	58.00	125566.2	114391.2	11175.0	0.0	0.00
25Y72HR	58.08	126419.7	115224.2	11195.6	0.0	0.00
25Y72HR	58.17	127294.9	116069.5	11225.4	0.0	0.00
25Y72HR	58.25	128193.6	116932.1	11261.6	0.0	0.00

South Roosevelt Blvd.
Mass Balance Report

Simulation	Time hrs	Inflow Volume ft3	Outflow Volume ft3	Change in Sys Storage ft3	Difference ft3	Error %
25Y72HR	58.33	129108.1	117810.9	11297.2	0.0	0.00
25Y72HR	58.42	130033.1	118701.5	11331.6	0.0	0.00
25Y72HR	58.50	130965.6	119599.3	11366.3	0.0	0.00
25Y72HR	58.58	131925.2	120508.6	11416.6	0.0	0.00
25Y72HR	58.67	132952.9	121445.4	11507.5	0.0	0.00
25Y72HR	58.75	134054.5	122427.8	11626.6	0.0	0.00
25Y72HR	58.83	135205.2	123456.7	11748.5	0.0	0.00
25Y72HR	58.92	136388.9	124521.9	11867.0	0.0	0.00
25Y72HR	59.00	137596.0	125634.6	11961.4	0.0	0.00
25Y72HR	59.08	138871.8	126821.6	12050.2	0.0	0.00
25Y72HR	59.17	140305.2	128108.1	12197.2	0.0	0.00
25Y72HR	59.25	141903.2	129526.0	12377.2	0.0	0.00
25Y72HR	59.33	143610.1	131069.4	12540.6	0.0	0.00
25Y72HR	59.42	145389.7	132710.7	12679.0	0.0	0.00
25Y72HR	59.50	147234.5	134434.3	12800.1	0.0	0.00
25Y72HR	59.58	149902.6	136437.2	13465.5	0.0	0.00
25Y72HR	59.67	154929.9	139647.7	15282.2	0.0	0.00
25Y72HR	59.75	162568.6	144811.4	17757.3	0.0	0.00
25Y72HR	59.83	171977.3	151924.0	20053.3	0.0	0.00
25Y72HR	59.92	182522.7	160652.9	21869.8	0.0	0.00
25Y72HR	60.00	193895.7	170595.1	23300.6	0.0	0.00
25Y72HR	60.08	205121.1	181196.1	23925.0	0.0	0.00
25Y72HR	60.17	214595.8	191544.8	23051.0	0.0	0.00
25Y72HR	60.25	222070.3	200824.1	21246.2	0.0	0.00
25Y72HR	60.33	228213.9	208847.7	19366.2	0.0	0.00
25Y72HR	60.42	233432.2	215585.8	17846.4	0.0	0.00
25Y72HR	60.50	237986.4	221291.9	16694.5	0.0	0.00
25Y72HR	60.58	241909.6	226181.1	15728.6	0.0	0.00
25Y72HR	60.67	245118.5	230319.0	14799.5	0.0	0.00
25Y72HR	60.75	247696.4	233677.6	14018.7	0.0	0.00
25Y72HR	60.83	249860.6	236349.4	13511.2	0.0	0.00
25Y72HR	60.92	251761.8	238578.7	13183.2	0.0	0.00
25Y72HR	61.00	253504.5	240535.9	12968.6	0.0	0.00
25Y72HR	61.08	255129.2	242318.6	12810.6	0.0	0.00
25Y72HR	61.17	256610.7	243956.1	12654.5	0.0	0.00
25Y72HR	61.25	257956.1	245451.1	12505.0	0.0	0.00
25Y72HR	61.33	259211.6	246828.8	12382.8	0.0	0.00
25Y72HR	61.42	260408.7	248117.9	12290.8	0.0	0.00
25Y72HR	61.50	261568.1	249343.4	12224.7	0.0	0.00
25Y72HR	61.58	262691.2	250522.4	12168.8	0.0	0.00
25Y72HR	61.67	263759.7	251656.0	12103.7	0.0	0.00
25Y72HR	61.75	264773.3	252736.7	12036.6	0.0	0.00
25Y72HR	61.83	265750.5	253769.6	11980.9	0.0	0.00
25Y72HR	61.92	266703.8	254765.0	11938.8	0.0	0.00
25Y72HR	62.00	267641.4	255733.0	11908.5	0.0	0.00
25Y72HR	62.08	268550.9	256678.2	11872.8	0.0	0.00

South Roosevelt Blvd.
Mass Balance Report

Simulation	Time hrs	Inflow Volume ft3	Outflow Volume ft3	Change in Sys Storage ft3	Difference ft3	Error %
25Y72HR	62.17	269401.6	257589.4	11812.2	0.0	0.00
25Y72HR	62.25	270190.4	258451.3	11739.1	0.0	0.00
25Y72HR	62.33	270938.1	259265.3	11672.8	0.0	0.00
25Y72HR	62.42	271658.7	260041.8	11616.9	0.0	0.00
25Y72HR	62.50	272360.6	260789.6	11571.0	0.0	0.00
25Y72HR	62.58	273044.4	261514.7	11529.7	0.0	0.00
25Y72HR	62.67	273703.5	262217.8	11485.7	0.0	0.00
25Y72HR	62.75	274338.6	262897.3	11441.3	0.0	0.00
25Y72HR	62.83	274957.8	263555.1	11402.7	0.0	0.00
25Y72HR	62.92	275566.6	264195.3	11371.3	0.0	0.00
25Y72HR	63.00	276168.8	264822.2	11346.6	0.0	0.00
25Y72HR	63.08	276766.7	265439.3	11327.4	0.0	0.00
25Y72HR	63.17	277361.3	266049.1	11312.1	0.0	0.00
25Y72HR	63.25	277953.2	266653.2	11300.0	0.0	0.00
25Y72HR	63.33	278543.4	267253.0	11290.4	0.0	0.00
25Y72HR	63.42	279132.5	267849.5	11283.0	0.0	0.00
25Y72HR	63.50	279721.1	268443.7	11277.5	0.0	0.00
25Y72HR	63.58	280309.5	269036.2	11273.3	0.0	0.00
25Y72HR	63.67	280897.8	269627.6	11270.2	0.0	0.00
25Y72HR	63.75	281486.1	270218.2	11267.9	0.0	0.00
25Y72HR	63.83	282074.4	270808.2	11266.1	0.0	0.00
25Y72HR	63.92	282662.6	271397.8	11264.8	0.0	0.00
25Y72HR	64.00	283250.7	271987.1	11263.6	0.0	0.00
25Y72HR	64.08	283822.4	272573.4	11249.1	0.0	0.00
25Y72HR	64.17	284345.4	273142.5	11202.9	0.0	0.00
25Y72HR	64.25	284814.1	273676.6	11137.5	0.0	0.00
25Y72HR	64.33	285246.5	274172.0	11074.5	0.0	0.00
25Y72HR	64.42	285654.6	274634.4	11020.2	0.0	0.00
25Y72HR	64.50	286045.8	275070.4	10975.4	0.0	0.00
25Y72HR	64.58	286424.3	275486.0	10938.3	0.0	0.00
25Y72HR	64.67	286792.7	275885.2	10907.5	0.0	0.00
25Y72HR	64.75	287153.7	276271.3	10882.4	0.0	0.00
25Y72HR	64.83	287509.7	276647.3	10862.5	0.0	0.00
25Y72HR	64.92	287862.9	277015.8	10847.2	0.0	0.00
25Y72HR	65.00	288214.7	277378.9	10835.7	0.0	0.00
25Y72HR	65.08	288566.2	277738.6	10827.6	0.0	0.00
25Y72HR	65.17	288918.2	278096.1	10822.2	0.0	0.00
25Y72HR	65.25	289270.9	278452.5	10818.4	0.0	0.00
25Y72HR	65.33	289624.0	278808.2	10815.8	0.0	0.00
25Y72HR	65.42	289977.3	279163.6	10813.8	0.0	0.00
25Y72HR	65.50	290330.9	279518.6	10812.3	0.0	0.00
25Y72HR	65.58	290684.6	279873.4	10811.2	0.0	0.00
25Y72HR	65.67	291038.4	280228.1	10810.3	0.0	0.00
25Y72HR	65.75	291392.3	280582.7	10809.6	0.0	0.00
25Y72HR	65.83	291746.2	280937.1	10809.1	0.0	0.00
25Y72HR	65.92	292100.2	281291.5	10808.7	0.0	0.00

South Roosevelt Blvd.
Mass Balance Report

Simulation	Time hrs	Inflow Volume ft3	Outflow Volume ft3	Change in Sys Storage ft3	Difference ft3	Error %
25Y72HR	66.00	292454.2	281645.8	10808.4	0.0	0.00
25Y72HR	66.08	292808.2	282000.1	10808.1	0.0	0.00
25Y72HR	66.17	293162.2	282354.3	10807.9	0.0	0.00
25Y72HR	66.25	293516.1	282708.4	10807.7	0.0	0.00
25Y72HR	66.33	293870.1	283062.6	10807.5	0.0	0.00
25Y72HR	66.42	294224.1	283416.6	10807.4	0.0	0.00
25Y72HR	66.50	294578.0	283770.7	10807.3	0.0	0.00
25Y72HR	66.58	294932.0	284124.7	10807.2	0.0	0.00
25Y72HR	66.67	295285.9	284478.7	10807.2	0.0	0.00
25Y72HR	66.75	295639.9	284832.7	10807.1	0.0	0.00
25Y72HR	66.83	295993.8	285186.7	10807.1	0.0	0.00
25Y72HR	66.92	296347.7	285540.7	10807.1	0.0	0.00
25Y72HR	67.00	296701.7	285894.6	10807.0	0.0	0.00
25Y72HR	67.08	297055.6	286248.6	10807.0	0.0	0.00
25Y72HR	67.17	297409.6	286602.6	10807.0	0.0	0.00
25Y72HR	67.25	297763.5	286956.5	10807.0	0.0	0.00
25Y72HR	67.33	298117.5	287310.5	10807.0	0.0	0.00
25Y72HR	67.42	298471.4	287664.4	10807.0	0.0	0.00
25Y72HR	67.50	298825.3	288018.4	10807.0	0.0	0.00
25Y72HR	67.58	299179.3	288372.3	10807.0	0.0	0.00
25Y72HR	67.67	299533.2	288726.3	10807.0	0.0	0.00
25Y72HR	67.75	299887.2	289080.2	10807.0	0.0	0.00
25Y72HR	67.83	300241.1	289434.2	10807.0	0.0	0.00
25Y72HR	67.92	300595.1	289788.1	10806.9	0.0	0.00
25Y72HR	68.00	300948.9	290142.1	10806.9	0.0	0.00
25Y72HR	68.08	301293.7	290494.5	10799.2	0.0	0.00
25Y72HR	68.17	301613.2	290837.6	10775.7	0.0	0.00
25Y72HR	68.25	301905.7	291162.5	10743.2	0.0	0.00
25Y72HR	68.33	302180.2	291468.1	10712.0	0.0	0.00
25Y72HR	68.42	302442.6	291757.4	10685.2	0.0	0.00
25Y72HR	68.50	302696.6	292033.6	10663.1	0.0	0.00
25Y72HR	68.58	302944.3	292299.6	10644.7	0.0	0.00
25Y72HR	68.67	303187.0	292557.5	10629.5	0.0	0.00
25Y72HR	68.75	303425.9	292808.9	10617.0	0.0	0.00
25Y72HR	68.83	303662.4	293055.3	10607.1	0.0	0.00
25Y72HR	68.92	303897.6	293298.0	10599.6	0.0	0.00
25Y72HR	69.00	304132.0	293538.0	10593.9	0.0	0.00
25Y72HR	69.08	304366.2	293776.3	10589.9	0.0	0.00
25Y72HR	69.17	304600.4	294013.5	10587.0	0.0	0.00
25Y72HR	69.25	304834.7	294249.9	10584.8	0.0	0.00
25Y72HR	69.33	305068.9	294485.7	10583.2	0.0	0.00
25Y72HR	69.42	305303.1	294721.2	10581.9	0.0	0.00
25Y72HR	69.50	305537.4	294956.4	10581.0	0.0	0.00
25Y72HR	69.58	305771.6	295191.4	10580.2	0.0	0.00
25Y72HR	69.67	306005.8	295426.2	10579.6	0.0	0.00
25Y72HR	69.75	306240.0	295660.9	10579.2	0.0	0.00

South Roosevelt Blvd.
Mass Balance Report

Simulation	Time hrs	Inflow Volume ft3	Outflow Volume ft3	Change in Sys Storage ft3	Difference ft3	Error %
25Y72HR	69.83	306474.3	295895.5	10578.8	0.0	0.00
25Y72HR	69.92	306708.5	296130.0	10578.5	0.0	0.00
25Y72HR	70.00	306942.7	296364.4	10578.3	0.0	0.00
25Y72HR	70.08	307177.1	296598.8	10578.2	0.0	0.00
25Y72HR	70.17	307411.7	296833.3	10578.3	0.0	0.00
25Y72HR	70.25	307646.6	297068.0	10578.6	0.0	0.00
25Y72HR	70.33	307881.7	297302.8	10578.9	0.0	0.00
25Y72HR	70.42	308116.9	297537.8	10579.1	0.0	0.00
25Y72HR	70.50	308352.3	297773.0	10579.3	0.0	0.00
25Y72HR	70.58	308587.7	298008.2	10579.5	0.0	0.00
25Y72HR	70.67	308823.2	298243.6	10579.6	0.0	0.00
25Y72HR	70.75	309058.7	298479.0	10579.7	0.0	0.00
25Y72HR	70.83	309294.2	298714.4	10579.8	0.0	0.00
25Y72HR	70.92	309529.8	298949.9	10579.9	0.0	0.00
25Y72HR	71.00	309765.3	299185.4	10579.9	0.0	0.00
25Y72HR	71.08	310000.9	299420.9	10579.9	0.0	0.00
25Y72HR	71.17	310236.5	299656.5	10580.0	0.0	0.00
25Y72HR	71.25	310472.0	299892.0	10580.0	0.0	0.00
25Y72HR	71.33	310707.6	300127.6	10580.0	0.0	0.00
25Y72HR	71.42	310943.1	300363.1	10580.0	0.0	0.00
25Y72HR	71.50	311178.7	300598.7	10580.0	0.0	0.00
25Y72HR	71.58	311414.3	300834.3	10580.0	0.0	0.00
25Y72HR	71.67	311649.8	301069.8	10580.0	0.0	0.00
25Y72HR	71.75	311885.4	301305.4	10580.0	0.0	0.00
25Y72HR	71.83	312121.0	301540.9	10580.0	0.0	0.00
25Y72HR	71.92	312356.5	301776.5	10580.0	0.0	0.00
25Y72HR	72.00	312592.0	302012.0	10579.9	0.0	0.00
25Y72HR	72.25	313085.8	302635.5	10450.2	0.0	0.00
25Y72HR	72.50	313274.9	303000.1	10274.8	0.0	0.00
25Y72HR	72.75	313332.9	303193.2	10139.7	0.0	0.00
25Y72HR	73.00	313342.5	303293.2	10049.3	0.0	0.00
25Y72HR	73.25	313342.5	303343.8	9998.7	0.0	0.00
25Y72HR	73.50	313342.5	303371.4	9971.1	0.0	0.00
25Y72HR	73.75	313342.5	303387.3	9955.2	0.0	0.00
25Y72HR	74.00	313342.5	303396.8	9945.7	0.0	0.00
25Y72HR	74.25	313342.5	303402.7	9939.8	0.0	0.00
25Y72HR	74.50	313342.5	303406.5	9936.0	0.0	0.00
25Y72HR	74.75	313342.5	303408.9	9933.6	0.0	0.00
25Y72HR	75.00	313342.5	303410.6	9931.9	0.0	0.00
25Y72HR	75.25	313342.5	303411.7	9930.8	0.0	0.00
25Y72HR	75.50	313342.5	303412.5	9930.0	0.0	0.00
25Y72HR	75.75	313342.5	303413.1	9929.4	0.0	0.00
25Y72HR	76.00	313342.5	303413.5	9929.0	0.0	0.00
25Y72HR	76.00	313342.5	303413.5	9929.0	0.0	0.00

APPENDIX 6

OPTIONAL PIPE MATERIAL CALCULATIONS

SEVERN TRENT SERVICES

STL Miami

ADVANC002002
Susie Soto
Advance Consult. Eng. Svc. Inc
7800 W. Oakland Park Blvd.,#109
Sunrise, FL 33351

February 13, 2001
Submission # 102000282
Order # 135463
FDEP CompQAP# 990102
FL-DOH Certification# E86349, 86413, 86565

Site Location/Project
Keywest,Florida
S. Roosevelt Blvd.Improvements

Sample I.D.: PT 44+30
Collected: 02/05/01 00:00
Received: 02/07/01 12:20
Collected by: B. Jones

PARAMETER	RESULT	UNITS	METHOD	DETECTION LIMIT-RQL	DATE EXT.	DATE ANALY.	ANALYST
Sulfate	2150	mg/L	ASTM D4130	1.0	02/07/2001	02/07/2001	RDB
Chloride	11000	mg/L	ASTM D512	1.0	02/07/2001	02/07/2001	RDB
pH	7.31	units	ASTM G-51	1.0	02/07/2001	02/07/2001	MC
ASTM-G57 Resistivity in SOIL expressed as Ohm*cm			MEDF	1			
Resistivity (As Received)	31	Ω*cm.	ASTM G-57	1.000	02/07/2001	02/07/2001	MC
istivity (Saturated)	31	Ω*cm.	ASTM G-57	1.000	02/07/2001	02/07/2001	MC

BDL: Indicates Analyte is Below Detection LimitMEDF: Matrix Effected Dilution Factor***
Work Subcontracted to Outside Labs Denoted by HRS Cert ID in Analyst Field
Qualifier following result conforms to FAC 62-160 Table 7***Unless otherwise noted, mg/Kg denotes wet weight***
***62-770: If the MDL using the most sensitive and currently available technology is higher than a specific criterion, the PQL shall be used.
Certs:Al.=#41180, Ct.=#PH0217, Ks.=#E270 + E1245, Ky.=#90087, La.=#9601, Md.=#271, Ma.=#M-FL535
NC.=#539, ND.=#R163, OK.=#9523, SC.=#96023, Tn.=#TN02826

Authorized Laboratory Management

TABLE 6-1 CULVERT MATERIAL APPLICATIONS AND DESIGN SERVICE LIFE

	Application	Storm Drain		Cross Drain		Side Drain[4]	Gutter Drain	French Drain		
	Highway Facility (see notes)	Minor	Major	Minor	Major	All	All	Replacement will Impact the Roadway[5]		Other
								Minor	Major	All
	Design Service Life →	50	100	50	100	25	25[6]	50	100	50
	Culvert Material	An * indicates suitable for further evaluation.								
PIPE	Corrugated Aluminum Pipe CAP	*	*	*	*	*	*	*	*	*
PIPE	Corrugated Steel Pipe CSP	*	*	*	*	*	*	*	*	*
PIPE	Corrugated Aluminized Steel Pipe CASP	*	*	*	*	*	*	*	*	*
PIPE	Spiral Rib Aluminum Pipe SRAP	*	*	*	*	*		*	*	*
PIPE	Spiral Rib Steel Pipe SRSP	*	*	*	*	*		*	*	*
PIPE	Spiral Rib Aluminized Steel Pipe SRASP	*	*	*	*	*		*	*	*
PIPE	Steel Reinforced Concrete Pipe SRCP	*	*	*	*	*		*	*	*
PIPE	Non-reinforced Concrete Pipe NRCP	*	*	*	*	*		*	*	
PIPE	Fiber Reinforced Concrete Pipe FRCP	*	*	*	*	*		*	*	
PIPE	Polyethylene Pipe – Class I HPEP-I	*		*		*		*		*
PIPE	Polyethylene Pipe – Class II HDEP-II	*	*	*	*	*		*	*	*
PIPE	Polyvinyl-Chloride Pipe PVC	*	F949	*	F949	*		*	F949	*
STRPL	Structural Plate Aluminum Pipe SPAP	*	*	*	*	*				
STRPL	Structural Plate Alum. Pipe-Arc SPAPA	*	*	*	*	*				
STRPL	Structural Plate Steel Pipe SPSP	*	*	*	*	*				
STRPL	Structural Plate Steel Pipe-Arch SPSPA	*	*	*	*	*				
BOX	Aluminum Box Culvert	*	*	*	*	*				
BOX	Concrete Box Culvert	*	*	*	*	*				
BOX	Steel Box Culvert	*	*	*	*	*				

Table notes are on the following page.

GENERAL NOTES

1. The Contractor may use any of the optional pipe materials tabulated for a given structure. Only the material options tabulated for a given structure can be used.

2. Adjustment to the bid quantities, prices and payment will not be allowed due to increase or decrease in structure size, shape, length, width, depth or accessory construction necessary to accommodate the use of an optional pipe material other than the "plotted" option; likewise there will be no added or reduced compensation for structure alterations required to relieve utility conflicts which arise from the use of an optional material other than the "plotted" option.

3. Adjustment to the bid quantities, prices and payment will not be allowed due to increased or decreased excavation, bedding, borrow, backfilling, compaction, special installation requirements or disposal of excess materials due to use of any of the pipe optional materials. Likewise, adjustment in the quantities, prices and payment will not be allowed due to differences in end treatment size or types, pipe length, alternate jointing and connecting materials, saddles, cradles, filter fabrics, shoring or similar features due to the use of an optional material other than the "plotted" option.

4. If adjustments are required due to plan errors or omissions or authorized field changes, the "plotted" material and not the material elected by the Contractor would be used to establish new pay quantities.

5. The Contractor shall notify the Department in writing as to which optional pipe material he chooses to use at the preconstruction conference. Once identified the contactor may not change pipe material selected without the approval of the Engineer.

6. Pipe sizes other than round (Ellipitical/Arch) are summarized and paid for using equivalent round pipe diameter.

STRUCTURE	SIZE (Inches)	MATERIAL	PLOTTED	AS BUILT	REMARKS
ALL STRUCTURES	18	NRCP, NONE-REINFORCED CONCRETE PIPE	X		
		PP, POLYPROPYLENE			
		PVC, POLYVINIL CHLORIDE PIPE (ASTM F-949)			
		SRAP, STEEL REINFORCED CONCRETE PIPE			
ALL STRUCTURES	24	NRCP, NONE-REINFORCED CONCRETE PIPE	X		
		PP, POLYPROPYLENE			
		PVC, POLYVINIL CHLORIDE PIPE (ASTM F-949)			
		SRAP, STEEL REINFORCED CONCRETE PIPE			

REVISIONS			
DATE	DESCRIPTION	DATE	DESCRIPTION

BCC Engineering, Inc.
Luis A. Rodriguez
P.E. License No. 63983
7300 N Kendall Drive, Suite 400. Miami, Florida 33156
Phone: (305) 670-2350 Fax: (305) 670-2351
Certificate of Authorization No. 7184

STATE OF FLORIDA
DEPARTMENT OF TRANSPORTATION

ROAD NO.	COUNTY	FINANCIAL PROJECT ID
SR A1A	MONROE	250548-8-52-01

OPTIONAL MATERIALS TABULATION

SHEET NO.
16

$USER$ $DATE$ $TIME$ $FILE$

Florida Department of Transportation

Corrosion Research Laboratory

Culvert Service Life Estimator

Date Jul 10, 2014

Project Name:	SR A1A / S ROOSEVELT BLVD
FM #:	250548-4-52-01
Structure Number:	All structures within the project
Structure Station:	44+30.00
Boring Number/Location:	PT 1
County:	MONROE
Designer:	R.S.

Design Life (Years)	100		pH	7.31
Manning's n Value	0.012		Resistivity	31
Diameter (inches)	18.00		Chlorides	11000
'd' in Inches	49.00		Sulfates	2150

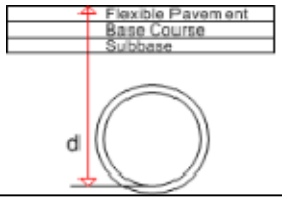

Type of Culvert	Service Life	Environment	Structural	
(NRCP) Non-Reinforced Concrete, Cl. 'I'	358	Pass	Pass	
(HDPE) High Density Polyethylene, Cl. II	100+	Pass	Pass	1
(PP) Polypropylene	100+	Pass	Pass	2
(PVC) Polyvinyl Chloride, ASTM F-949	100+	Pass	Pass	
(SRAP) Aluminum - Spiral Rib, 16 GA.	100	Pass	Pass	3
(CSP/SRSP)SRSP CANNOT be used	19	Fail	Fail	
(RCP)CANNOT be used		Fail	Fail	
(HDPE)CANNOT be used		Fail	Fail	
(RCP)CANNOT be used		Fail	Fail	
(CASP/SRASP)SRASP CANNOT be used		Fail	Fail	

1) HDPE and PP not allowed in the Florida Keys for 100 year service life. No restrictions for 50 year service life.
2) HDPE and PP not allowed in the Florida Keys for 100 year service life. No restrictions for 50 year service life.
3) ONLY in clean backfill

This Program is developed by the Florida Department of Transportation Corrosion Research Laboratory to calculate the approximate service life of culverts corresponding to environmental parameters. Given these parameters, the program will list the performance of the most commonly used culverts in descending order. This program is intended for use as an environmental durability estimator ONLY. It is the designer's responsibility to choose the proper culvert to meet all structural and hydraulic requirements. If you have any questions or suggestions regarding the use of this program, please contact Rick Jenkins, P.E. at the Roadway Design Office - Drainage, Email: rick.jenkins@dot.state.fl.us

Florida Department of Transportation

Corrosion Research Laboratory

Culvert Service Life Estimator

Date Jul 10, 2014

Project Name:	SR A1A / S ROOSEVELT BLVD
FM #:	250548-4-52-01
Structure Number:	All structures within the project
Structure Station:	44+30.00
Boring Number/Location:	PT 1
County:	MONROE
Designer:	A.R.

Design Life (Years)	100		pH	7.31
Max Allowable Manning's n	0.012		Resistivity	31
Diameter (inches)	24.00		Chlorides	11000
'd' in Inches	56.40		Sulfates	2150

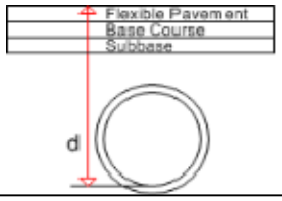

Type of Culvert	Service Life	Environment	Structural		
(NRCP) Non-Reinforced Concrete, CL 'I'	358	Pass	Pass		
(HDPE) High Density Polyethylene, CL II	100+	Pass	Pass		1
(PP) Polypropylene	100+	Pass	Pass		2
(PVC) Polyvinyl Chloride, ASTM F-949	100+	Pass	Pass		
(SRAP) Aluminum - Spiral Rib, 16 GA.	100	Pass	Pass		3
(CSP/SRSP)SRSP CANNOT be used	19	Fail	Fail		
(SRPE)UNAVAILABLE in this size		Fail	Fail		
(RCP)CANNOT be used		Fail	Fail		
(HDPE)CANNOT be used		Fail	Fail		
(RCP)CANNOT be used		Fail	Fail		
(CASP/SRASP)SRASP CANNOT be used		Fail	Fail		

1) HDPE and PP not allowed in the Florida Keys for 100 year service life. No restrictions for 50 year service life.
2) HDPE and PP not allowed in the Florida Keys for 100 year service life. No restrictions for 50 year service life.
3) ONLY in clean backfill

This Program is developed by the Florida Department of Transportation Corrosion Research Laboratory to calculate the approximate service life of culverts corresponding to environmental parameters. Given these parameters, the program will list the performance of the most commonly used culverts in descending order. It is the designer's responsibility to choose the proper culvert to meet all structural and hydraulic requirements. If you have any questions or suggestions regarding the use of this program, please contact Rick Jenkins, P.E. at the Roadway Design Office - Drainage, Email: rick.jenkins@dot.state.fl.us

APPENDIX 7

CORRESPONDENCE

MEETING MINUTES

Date: February 20, 2007
To: Attendees

Re: South Roosevelt Blvd. from MP 0.00 to MP 0.778 – Drainage Design

Monroe County
FPID 250548-4

Meeting Date:	February 20, 2007
Time:	10:00 AM
Place:	FDOT District 6, Drainage
By:	Anthony Jorges (BCC Engineering)

Attendees:		Contact Information
(Please see sign-in sheet)	Ariel Millan (BCC Engineering)	305-670-2350
	Elia Nunez (BCC Engineering)	305-670-2350
	Anthony Jorges (BCC Engineering)	305-670-2350
	Reinaldo Carvajal (FDOT)	305-670-5251
	Ricardo Salazar (FDOT)	305-470-5264

Copies to: File

This was the initial coordination meeting held to discuss the proposed drainage system improvements along South Roosevelt Blvd. within the project limits. Improvements include installation of inlets and new drainage wells. The following items were discussed:

1. Mr. Millan started the meeting by giving a brief background and description of BCC's role. The following key points were mentioned:
   a. There are 5 existing deep wells along the south side of south Roosevelt blvd which will be utilized and additional wells will most likely need to be constructed.
   b. The capacity of the existing wells is not known and existing plans have been requested.

2. It was indicated that FDOT may have plans for existing wells and for the project currently under construction to the north of BCC's project. Plans may be requested but the request process has changed and is now more complex.
3. Permitting
   a. In regard to permits Mr. Carvajal stated the he believes FDEP permits are not necessary for deep wells in the Florida keys.
   b. John Palenchar, FDOT district permits coordinator, would be able to say exactly what the permitting process would entail.
   c. DERM has no jurisdiction in the keys, permit applications would most likely go to SFWMD

4. The usual water quality requirement for deep wells is a 90 second detention time. Volume used for detention may include volume of entire system including pipes.
5. The Hydro International Downstream Defender system was discussed. It is currently being installed in the project to the North of BCC's project. A study was done for this project evaluating the effectiveness of water treatment of the Downstream defender vs. a similar system, CDS. CDS was found to be more effective and recommended but was not used.
6. Any system is ok to use as long as it is approved by SFWMD.
7. Be sure manufacturer specifies head loss, water quality, and maintenance for product. Mr. Salazar suggested that these specs be signed and sealed by manufacturer
8. FDOT will review plans and will be concerned with capacity, not water quality. A factor safety of 2 or greater should be applied especially since the system will have no overflows.
9. Design should be based on 10 year storm with durations of 1hr, 8 hrs, and 24 hrs.
10. No test of wells should be required, call Bill McClowsky with SFWM for further clarification.
11. A Reasonable Assurance Report was prepared for the project currently under construction and may be reused for this project upon FDOT's approval.

Sign-in Sheet

Project: SOUTH ROOSEVELT FROM MP. 0.00 TO MP. 0.778

Date: 2/20/07

Purpose of Meeting: DRAINAGE COORDINATION MEETING

Person	Agency	Ph. No.	e-mail Address
ARIEL MILLAN	BCC ENGINEERING	(305) 670-2350	AMILLAN@BCCENG.COM
ELIA NUÑEZ	BCC Engineering	(305) 670-2350	ENUNEZ@BCCEng.com
Anthony Jorges	BCC Engineering	(305) 670-2350	AJorges@BCCEng.com
Reinaldo Carvajal	FDOT	(305) 470-5251	reinaldo.carvajal@dot.state.fl.us
RICARDO SALAZAR	FDOT	(305) 470-5264	ricardo.salazar@dot.state.fl.us

MEETING MINUTES

Date: April 26, 2007
To: Attendees

Re: South Roosevelt Blvd. from MP 0.00 to MP 0.778 – Pre-Application Meeting with SFWMD

Monroe County
FPID 250548-4

Meeting Date:	April 24, 2007
Time:	3:00 PM
Place:	SFWMD Headquarter (Palm Beach County)
By:	Luis A. Rodriguez (BCC Engineering)

Attendees:		Contact Information
(Please see sign-in sheet)	Kevin Dickson (SFWMD)	561-682-6873
	Luis A. Rodriguez (BCC Engineering)	305-670-2350
	Elia Nunez (BCC Engineering)	305-670-2350

Copies to: Ariel Millan (BCC Engineering)
Frank Panellas (Sanchez-Zeinali)
File

The purpose of this pre-application meeting was to present the project to South Florida Water Management District (SFWMD) and receive feedback on the permitting requirements for this project given the proposed improvements, impacts, and proposed drainage system. The project is located in the City of Key West and extends for a length of 0.78 Miles. The proposed improvements consist of roadway reconstruction including the drainage system, lighting, sidewalks, pavement, and signing and pavement marking. The following items were discussed:

1. Mr. Rodriguez explained briefly the location of the project as well as the project limits in relation to a recently permitted project at the north end of this project. Mr. Rodriguez explained that the proposed drainage system is very similar to the system on the project to the north consisting of drainage inlets connected to deep wells with CDS or Downstream Defender type boxes providing water quality.
2. Mr. Dickson inquired about the scope of the project in terms of additional impervious. Mr. Rodriguez explained that the right-of-way limits under the existing conditions consisted essentially of pavement and therefore the area is 100% impervious. Mr. Rodriguez explained that the project would not increase the impervious areas and would improve the water quality as the new drainage system would provide a system to attain some water quality. Mr. Dickson indicated that since the project was not increasing the impervious areas the project was considered a “retrofit”. Mr. Dickson further explained that this

project does not need to comply with the additional 50% water quality volume when discharging into Outstanding Florida Waters (OFW) as this is a "retrofit" project. The project does not increase the impervious area and is improving the existing water quality attained under the current conditions.

3. Mr. Dickson indicated that the storm to be modeled for the purpose of the permit is the 25Yr-72Hr storm. Mr. Dickson inquired about any proposed outfalls to which Mrs. Nunez explained the existence of outfalls that even though they will not be removed, the system is being designed to avoid the overflow of any runoff. Mrs. Nunez explained that the existing wells (five in total within the project limits) will remain and that a total of nine additional wells will be installed significantly increasing the capacity of the drainage system. In other words, the system is designed to be self-contained.
4. Mr. Dickson explained that in that case when the storm can be contained by the proposed drainage system without any overflows, it is not necessary to prepare a Pre- vs Post-Development analysis and an explanation of the increase in capacity of the new system should be sufficient for the permit application.
5. Mr. Dickson requested that a Land-use breakdown be provided as part of the application for the pre and post-development condition in order to compare any increases in impervious area.
6. Mr. Dickson indicated that the permit would consist of a permit modification to the existing permit for the project just north of the northern end of the project being discussed. The permit to be modified is Permit No. 44-00333-P.
7. Mrs. Nunez asked whether a Class V permit would still be required for the deep wells to which Mr. Dickson explained that a permit would be required by the Florida Department of Environmental Protection (FDEP).
8. As part of the meeting it was discussed the potential need for a no-notice short-term dewatering permit. It was agreed during this meeting that the permit application would address the dewatering permit by explaining the reason why it would be impractical to obtain a permit at this stage as the permit would be dependent on the construction methods used by the contractor.

The meeting was adjourned.

Please notify the writer of the minutes for any discrepancies or additions by May 3, 2007.

P:\060851.00 - South Roosevelt Blvd\Correspondence\SFWMD Minutes\Meeting Minutes 032407 Drainage Coordination SFWMD.doc

engineering
7300 North Kendall Drive, Suite 660
Miami, Florida 33156
t. 305.670.2350 f. 305.670.2351

JOB# _____ SHEET No _____ OF _____
PROJECT NAME _____
SUBJECT _____
CALCULATED BY _____ DATE _____
CHECKED BY _____ DATE _____

Name	Company	Phone
Luis Rodriguez	BCC Engineering	305-670-2350
Eli Alvarez	BCC engineering	305 670 2350
Kevin Dickson	SFWMD	561-682-6873

Luis Rodriguez

From: Elia E. Nunez
Sent: Wednesday, June 06, 2007 8:15 AM
To: Luis Rodriguez
Subject: FW: S.Roosevelt Blvd.

pic12779.jpg (2 KB)

FYI

Elia Nuñez, P.E.
BCC Engineering, Inc.
-----Original Message-----
From: ricardo.salazar@dot.state.fl.us [mailto:ricardo.salazar@dot.state.fl.us]
Sent: Wednesday, March 28, 2007 8:34 AM
To: Elia E. Nunez
Subject: Re: S.Roosevelt Blvd.

Elia,

Use the average between those two. I would feel much better,

Ricardo F. Salazar, P.E.
District Six Drainage Engineer
Florida Department of Transportation
Room #6211
1000 NW 111th Avenue
Miami, Florida 33172
Ph. No. 305-470-5264
Fax No. 305-470-5293
E-mail address: ricardo.salazar@dot.state.fl.us

"Elia E. Nunez" <enunez@bcceng.com> 03/28/2007 06:48 AM

To <ricardo.salazar@dot.state.fl.us>
cc
Subject S.Roosevelt Blvd.

Good Morning

Thanks for the information provided about the drainage wells. We did call them to verify the capacities, but we'll work on getting the test done. I did want to ask you something. We are going to run the Adicpri and we wanted to know if we should be using the mean tidal/sea level elevation
(0.50) or the mean high water elevation (1.10) when running the models.

Let me know what you guys think would be best. Thanks

(Embedded image moved to file: pic12779.jpg)Elia Nuñez, P.E.
7300 N Kendall Dr.
uite 660 Miami, FL 33156
T: (305) 670-2350
F: (305) 670-2351

APPENDIX 8

TEMPORARY DRAINAGE / MAINTENANCE OF TRAFFIC

PHASE I

1. INSTALL SIGNS PER FDOT INDEX 600.
2. REDUCE TRAFFIC TO ONE LANE IN EACH DIRECTION UTILIZING EXISTING WESTBOUND LANES.
3. WIDEN NORTHBOUND LANE ON BERTHA STREET AND SHIFT TRAFFIC TO TEMPORARY PAVEMENT AS SHOWN ON PLANS.
4. RECONSTRUCT EASTBOUND LANES AND FUTURE PARKING LANE.
5. CONSTRUCT PROPOSED DRAINAGE AND MODIFICATIONS TO WELLS.
6. RECONSTRUCT PROMENADE IN TWO PHASES AS SHOWN ON DETAILS FOR PHASE IA AND PHASE IB ALLOWING A MINIMUM OF 6' PATH AT ALL TIMES. SIDEWALK RECONSTRUCTION SHALL BE DONE IN A CONTINUOUS BASIS TO MINIMIZE ITS DURATION.

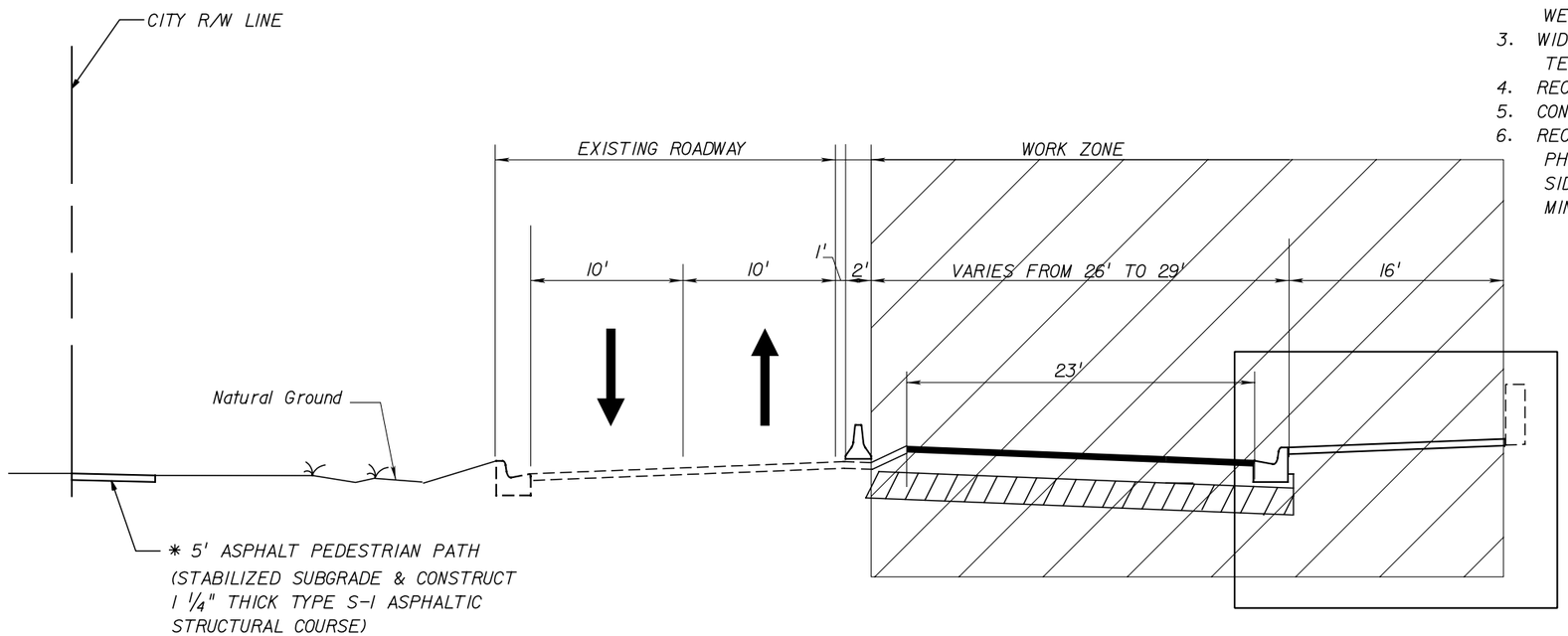

* SEE SIDEWALK DETAIL

PHASE I
SR A1A (SOUTH ROOSEVELT BOULEVARD)

PROMENADE DETAIL

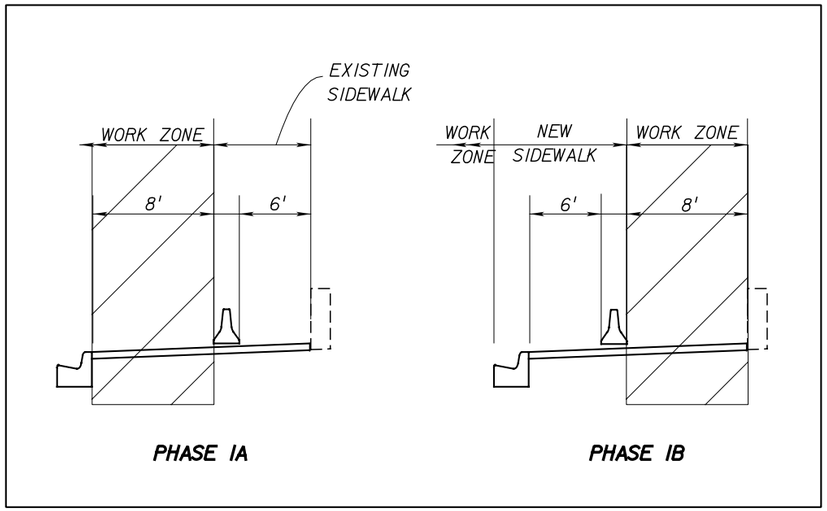

* 5' TEMPORARY ASPHALT PEDESTRIAN PATH TO BE CONSTRUCTED FROM STA. 11+00.00 TO STA. 25+39.00 AND FROM STA. 33+59.00 TO STA. 51+97.25

FROM STA. 25+39.00 TO STA. 33+59.00

REVISIONS					
DATE	BY	DESCRIPTION	DATE	BY	DESCRIPTION

SANCHEZ, ZEINALI & ASSOCIATES
10305 NW 41st STREET SUITE 103
MIAMI, FLORIDA 33178
(305) 477-4467
CERTIFICATE OF AUTHORIZATION NO. 7840
ENGINEER OF RECORD:
FRANK PANELLAS, P.E.
P.E. LICENSE NO. 59448

STATE OF FLORIDA
DEPARTMENT OF TRANSPORTATION

ROAD NO.	COUNTY	FINANCIAL PROJECT ID
SR A1A	MONROE	250548-4

TRAFFIC CONTROL PLAN

SHEET NO. 31

PHASE 2 - STAGE 1

1. SHIFT EAST BOUND LANE TOWARDS SOUTHERN LIMIT OF NEWLY CONSTRUCTED ROAD.
2. MAINTAIN WESTBOUND LANE IN EXISTING LOCATION FROM PHASE 1.
3. CONSTRUCT MIDDLE SECTION OF ROADWAY AT BOTH ENDS OF THE PROJECT AS INDICATED ON PLANS.

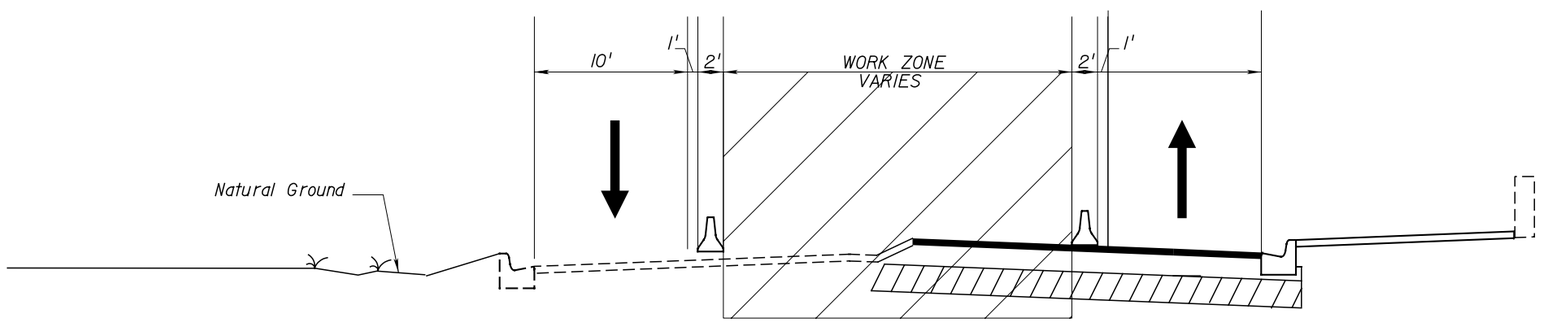

PHASE 2 - STAGE 1
SR A1A (SOUTH ROOSEVELT BOULEVARD)

REVISIONS					
DATE	BY	DESCRIPTION	DATE	BY	DESCRIPTION

S Z & A
SANCHEZ, ZEINALI & ASSOCIATES
10305 NW 41st STREET SUITE 103
MIAMI, FLORIDA 33178
(305) 477-4467
CERTIFICATE OF AUTHORIZATION NO. 7840
ENGINEER OF RECORD:
FRANK PANELLAS, P.E.
P.E. LICENSE NO. 59448

STATE OF FLORIDA
DEPARTMENT OF TRANSPORTATION

ROAD NO.	COUNTY	FINANCIAL PROJECT ID
SR A1A	MONROE	250548-4

TRAFFIC CONTROL PLAN

SHEET NO.
32

PHASE 2 - STAGE 2

1. SHIFT BOTH LANES OF TRAFFIC TO SOUTHERN PORTION OF NEWLY CONSTRUCTED ROAD.
2. RECONSTRUCT NORTH SECTION OF ROAD MAINTAINING ACCESS TO ALL EXISTING DRIVEWAYS.

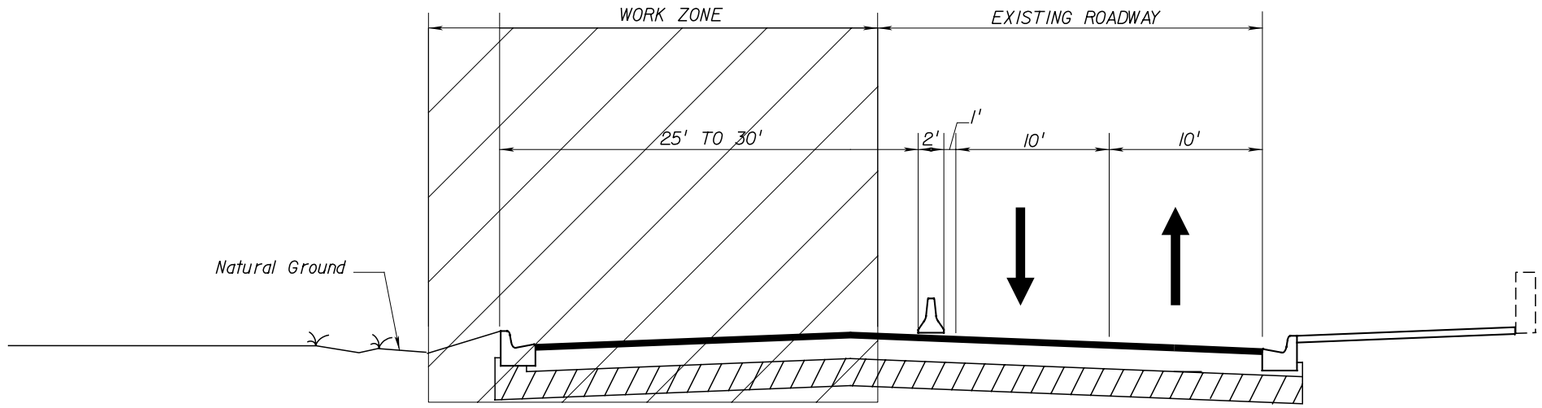

PHASE 2 - STAGE 2
SR AIA (SOUTH ROOSEVELT BOULEVARD)

PHASE 3

1. PLACE FRICTION COURSE AND FINAL PAVEMENT MARKINGS.

REVISIONS					
DATE	BY	DESCRIPTION	DATE	BY	DESCRIPTION

S Z & A
SANCHEZ, ZEINALI & ASSOCIATES
10305 NW 41st STREET SUITE 103
MIAMI, FLORIDA 33178
(305) 477-4467
CERTIFICATE OF AUTHORIZATION NO. 7840
ENGINEER OF RECORD:
FRANK PANELLAS, P.E.
P.E. LICENSE NO. 59448

STATE OF FLORIDA
DEPARTMENT OF TRANSPORTATION

ROAD NO.	COUNTY	FINANCIAL PROJECT ID
SR AIA	MONROE	250548-4

TRAFFIC CONTROL PLAN

SHEET NO. 33

TABLE 3 Flow through Barrier Wall Slots (On Longitudinal Grade): $Q=b_1+b_2y$
Equation is based on Water Flowing Longitudinally along the Wall

Slot Length (Index 415)		Applicable range Of depth of flow (y)		b_1		b_2	
mm	in	m	ft	SI	English	SI	English
150	6	0.013–0.163	0.042-0.54	-4.5×10^{-4}	-0.016	0.0375	0.404
790	31	0 – 0.070	0 – 0.33	0.0	0.0	0.114	1.23

Notes for Tables 2 and 3

1. Q= Flow through the slot.
2. y = Depth of flow at the edge of the barrier wall.
3. In English units, use y in feet to find Q in cubic feet per second.
4. In SI units, use y in meters to find Q in cubic meters per second.

TABLE 4: Spread at Temporary Barrier Walls (31") Slots
Based on Equation for Table 3

PAVEMENT WIDTH	CROSS SLOPE	LONGITUDINAL SLOPE = 0.3%	LONGITUDINAL SLOPE = 1%	LONGITUDINAL SLOPE = 3%
	FT/FT	Spread (ft)	Spread (ft)	Spread (ft)
12'	0.01	2.7	2.1	1.8
	0.02	1.8	1.4	1.1
	0.03	1.4	1.1	0.9
24'	0.01	3.5	2.8	2.7 (60')
	0.02	2.3	1.8	1.5
	0.03	1.8	1.4	1.1
36'	0.01	4.1	4.1 (75')	4.1 (160')
	0.02	2.6	2.1	2.0 (60')
	0.03	2.1	1.6	1.4