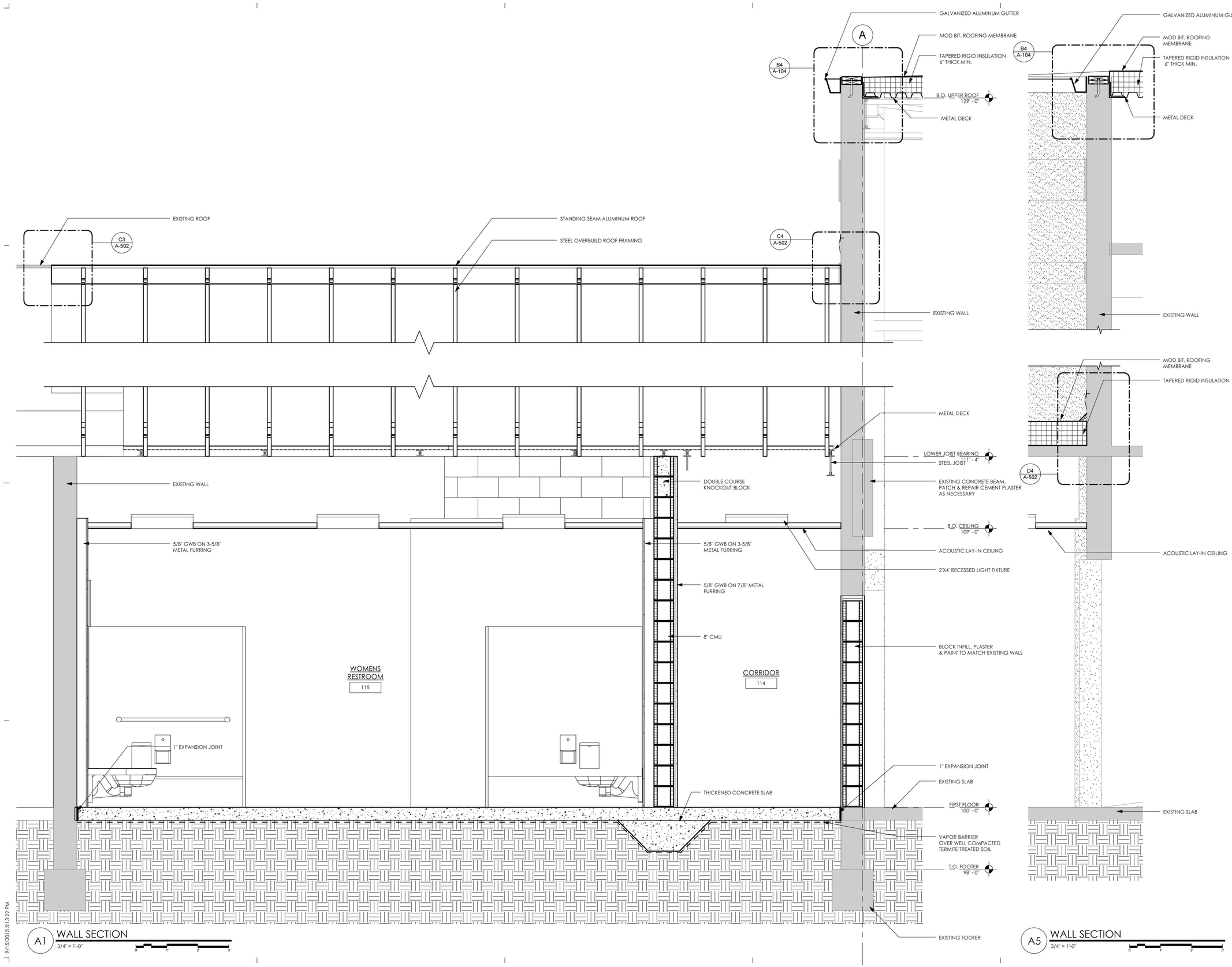

A1 WALL SECTION
3/4" = 1'-0"

A5 WALL SECTION
3/4" = 1'-0"

9/15/2015 5:13:22 PM

hayes | cumming
architects

2210 central ave, suite 100
st. petersburg, fl 33712
ph 727.321.0900
fx 727.321.0903

AA26001260
hc-arc.com

ANDREW M. HAYES
AR0016166

andrew m. hayes, aia, leed bd+c

© Copyright - All Rights Reserved

members of
AIA
American Institute of Architects

CONSULTANT:

CLIENT / PROJECT NAME:

CITY OF KEY WEST

RENOVATION TO

FREDERICK DOUGLASS RECREATION CENTER

111 OLIVIA STREET
KEY WEST, FL 33040

BID SET

Original drawing is 24"x36". Scale accordingly if reduced.

SHEET TITLE:

WALL SECTIONS

REVISIONS:

DATE ISSUED: 03/28/2016
PROJECT NO.: 12.0D01

DRAWING NUMBER:

A-304 SHEET: 35 OF 68

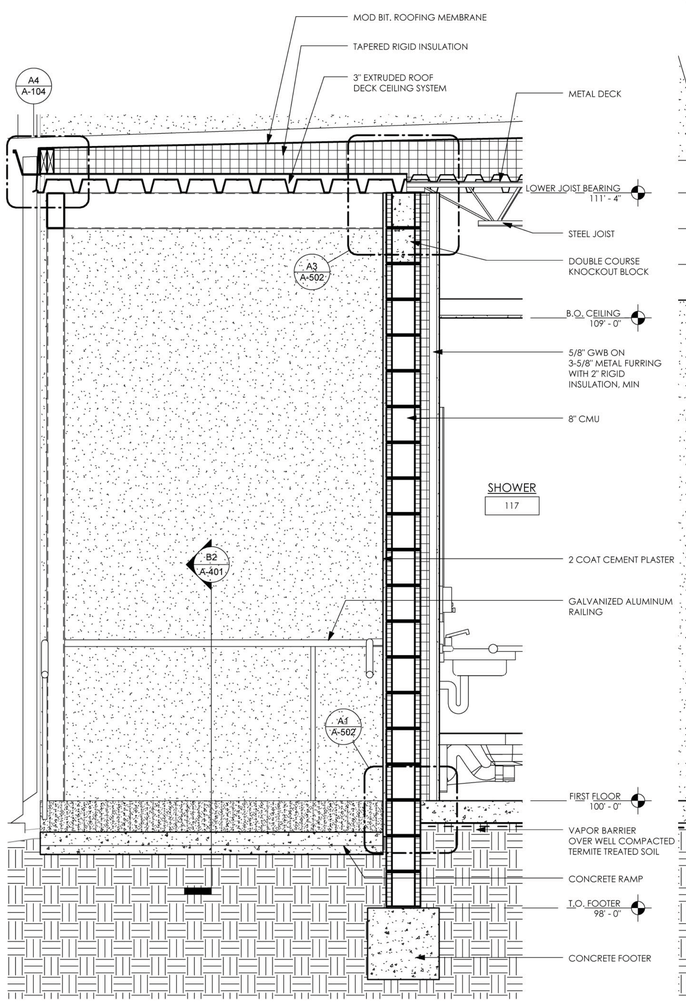

A1 WALL SECTION
3/4" = 1'-0"

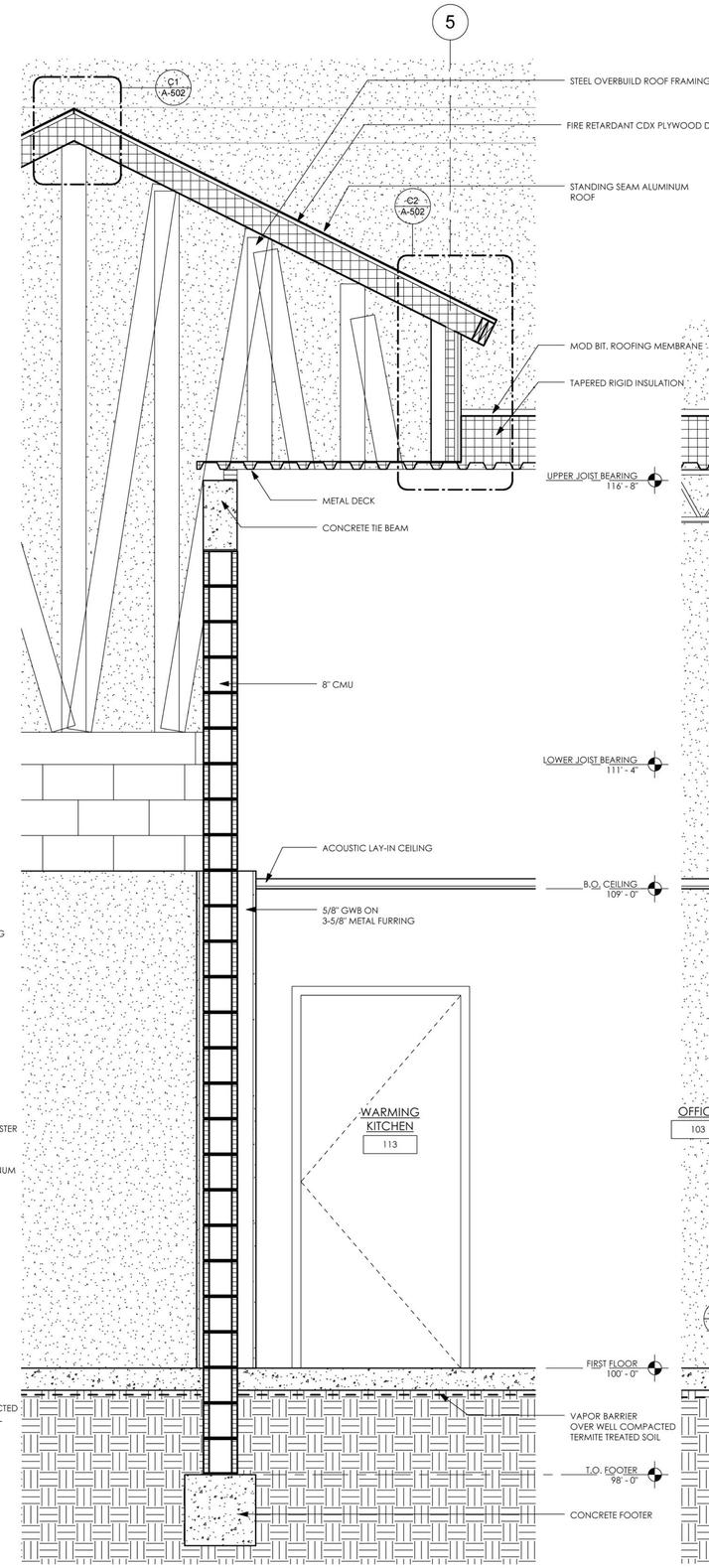

A3 WALL SECTION
3/4" = 1'-0"

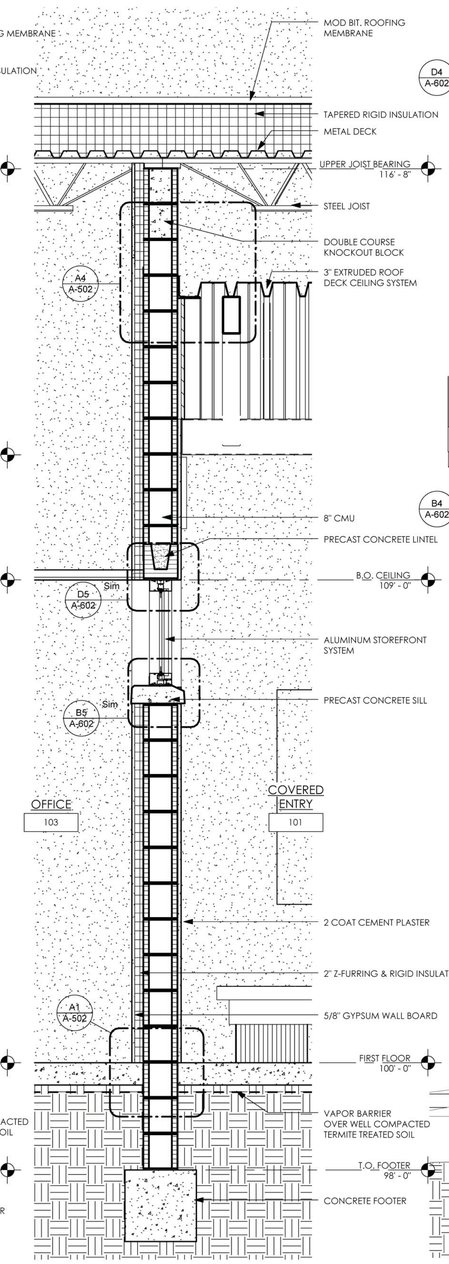

A4 WALL SECTION
3/4" = 1'-0"

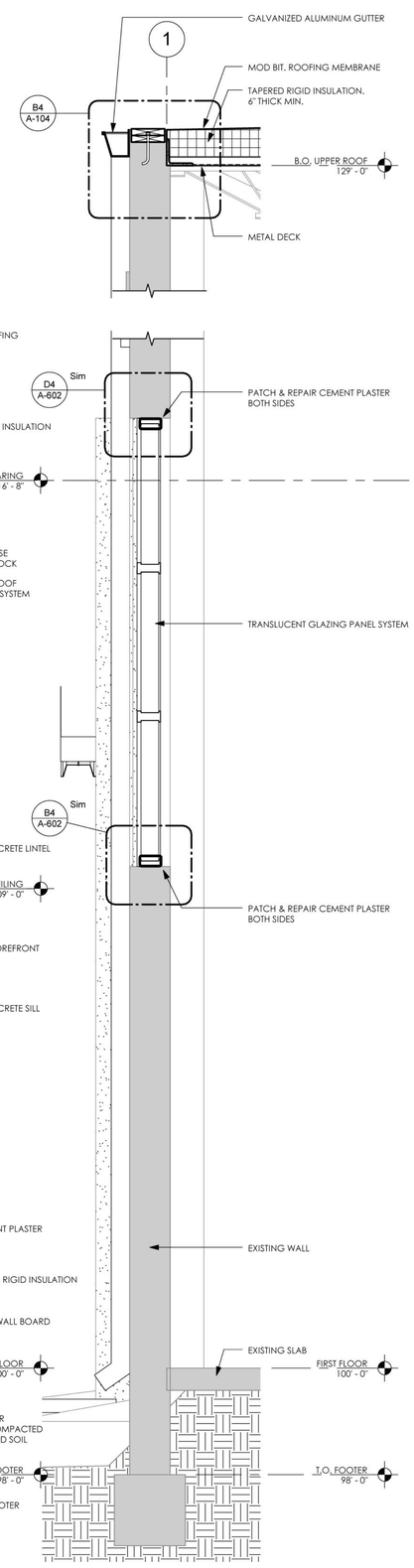

A5 WALL SECTION
3/4" = 1'-0"

9/15/2015 5:13:25 PM

hayes | cumming
architects

2210 central ave, suite 100
st. petersburg, fl 33712
ph 727.321.0900
fx 727.321.0903

AA26001260
hc-arc.com

ANDREW M. HAYES
AR0016166

andrew m. hayes, aia, leed bd+c

© Copyright - All Rights Reserved

members of
AIA
American Institute of Architects

CONSULTANT:

CLIENT / PROJECT NAME:

CITY OF KEY WEST

RENOVATION TO

FREDERICK DOUGLASS RECREATION CENTER

111 OLIVIA STREET
KEY WEST, FL 33040

BID SET

Original drawing is 24"x36". Scale accordingly if reduced.

SHEET TITLE:

WALL SECTIONS

REVISIONS:

DATE ISSUED: 03/28/2016
PROJECT NO.: 12.0D01

DRAWING NUMBER:

A-305 SHEET: 36 OF 68

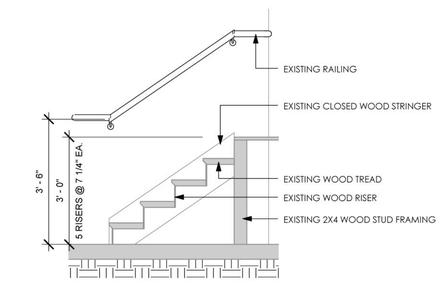

B1 STAIR SECTION - STAGE 105
1/2" = 1'-0"

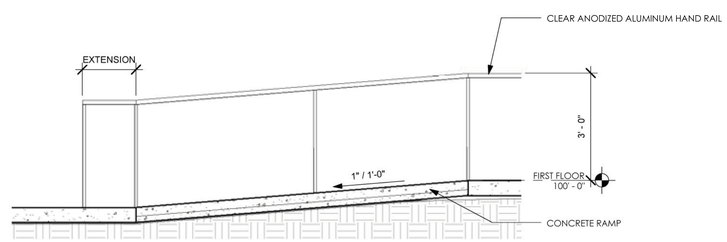

B2 RAMP SECTION - NORTH EXIT
1/2" = 1'-0"

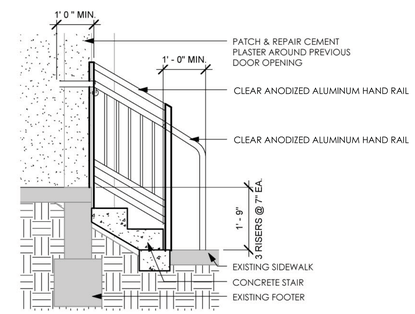

B4 STAIR SECTION - EAST EXIT
1/2" = 1'-0"

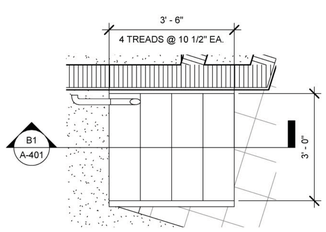

A1 ENLARGED PLAN - STAGE 105
1/2" = 1'-0"

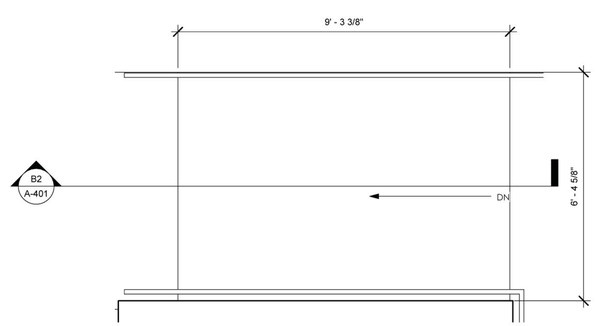

A2 RAMP DETAIL
1/2" = 1'-0"

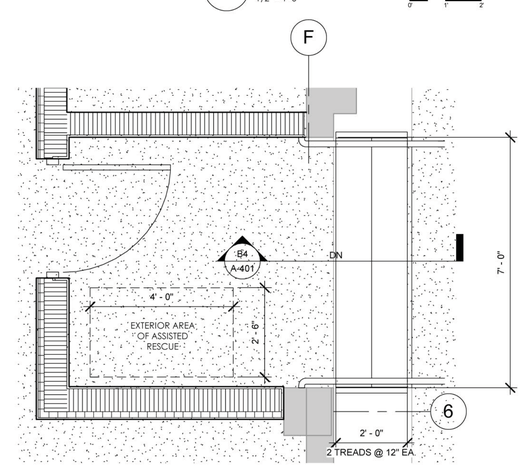

A4 ENLARGED PLAN - EAST EXIT
1/2" = 1'-0"

9/15/2015 5:13:28 PM

hayes | cumming
architects

2210 central ave, suite 100
st. petersburg, fl 33712
ph 727.321.0900
fx 727.321.0903

AA26001260
hc-arc.com

ANDREW M. HAYES
AR0016166

andrew m. hayes, aia, leed bd+c
© Copyright - All Rights Reserved

members of
AIA
American
Institute of
Architects

CONSULTANT:

CLIENT / PROJECT NAME:

CITY OF KEY WEST

RENOVATION TO

FREDERICK DOUGLASS RECREATION CENTER

111 OLIVIA STREET
KEY WEST, FL 33040

BID SET

Original drawing is 24"x36". Scale accordingly if reduced.

SHEET TITLE:

ENLARGED STAIR & RAMP PLANS

REVISIONS:

DATE ISSUED: 03/28/2016
PROJECT NO.: 12.0D01

DRAWING NUMBER:

A-401 SHEET: 37 OF 68

PLUMBING FIXTURE SCHEDULE

MARK	DESCRIPTION
1	FLOOR MOUNTED FLUSH VALVE TOILET
2	FLOOR MOUNTED FLUSH VALVE TOILET HANDICAP ACCESSIBLE
3	WALL MOUNTED URINAL
4	WALL MOUNTED URINAL HANDICAP ACCESSIBLE
5	WALL MOUNTED LAVATORY HANDICAP ACCESSIBLE
6	SHOWER
7	HI/LO ELECTRIC WATER COOLER
8	MOP SINK

TOILET ACCESSORY SCHEDULE

MARK	DESCRIPTION	CATALOG #
TA-1	36" STAINLESS STEEL GRAB BAR WITH SNAP FLANGE	BOBRICK B-6806 x 36
TA-2	42" STAINLESS STEEL GRAB BAR WITH SNAP FLANGE	BOBRICK B-6806 x 42
TA-3	SURFACE MOUNTED MULTI-ROLL TOILET TISSUE DISPENSER	BOBRICK B-2888
TA-4	SURFACE MOUNTED SOAP DISPENSER	BOBRICK B-2111
TA-5	MIRROR WITH STAINLESS STEEL CHANNEL FRAME - HANDICAP ACCESSIBLE	BOBRICK B-165 2448
TA-6	SURFACE MOUNTED SANITARY NAPKIN DISPOSAL	BOBRICK B-270
TA-7	SURFACE MOUNTED PAPER TOWEL DISPENSER/ WASTE RECEPTACLE	BOBRICK B-43699
TA-8	36" x 18" STAINLESS STEEL ADA SHOWER GRAB BAR	BOBRICK B-6137
TA-9	ROBE / TOWEL HOOKS	BOBRICK B-6717
TA-10	STAINLESS STEEL MOP & BROOM HOLDER	BOBRICK B223 x 24
TA-11	ADA RESTROOM SIGNAGE	

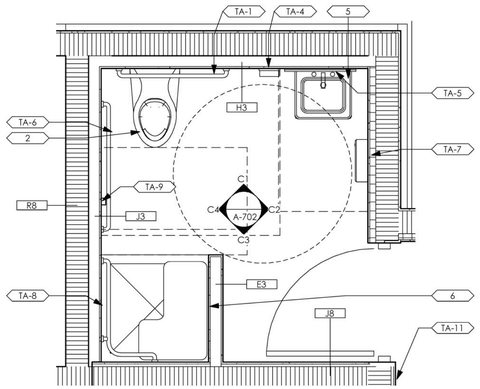

C1 ENLARGED PLAN - SHOWER
1/2" = 1'-0"

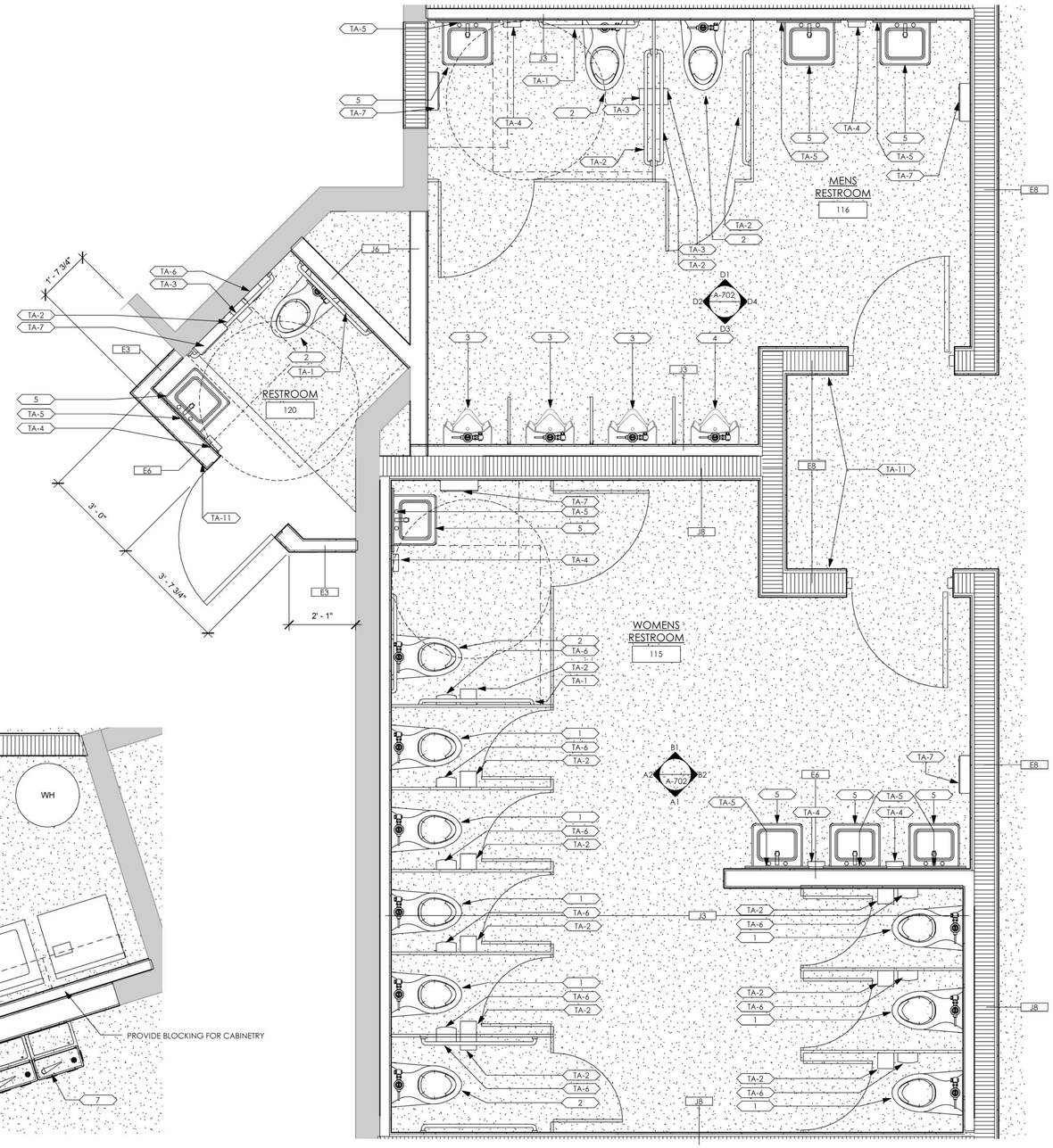

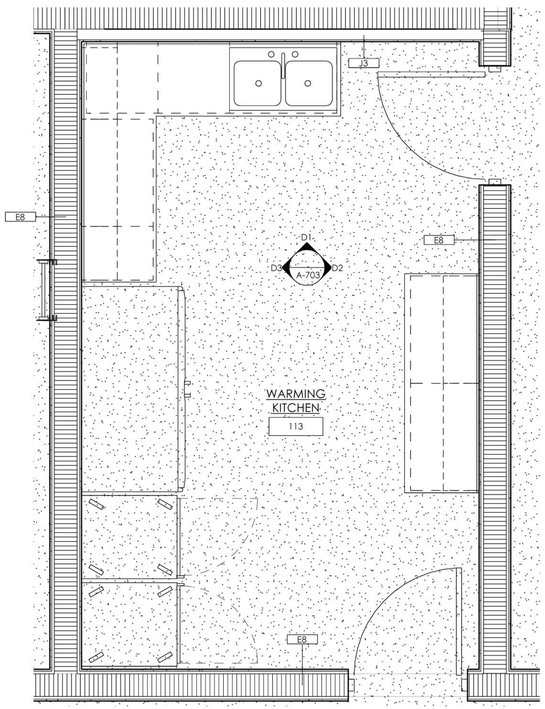

A1 ENLARGED PLAN - WARMING KITCHEN
1/2" = 1'-0"

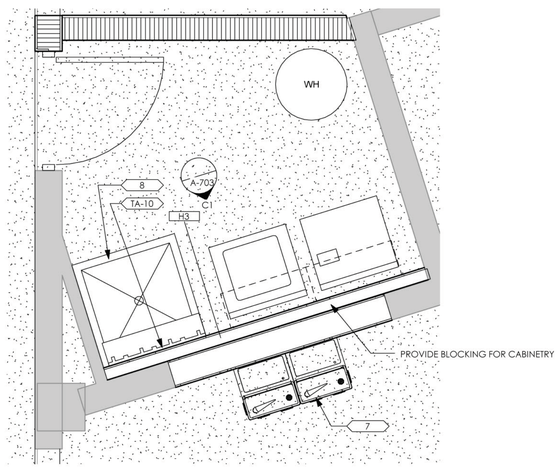

A3 ENLARGED PLAN - JANITOR
1/2" = 1'-0"

A4 ENLARGED PLAN - RESTROOMS
1/2" = 1'-0"

hayes | cumming
architects

2210 central ave, suite 100
st. petersburg, fl 33712
ph 727.321.0900
fx 727.321.0903

AA26001260
hc-arc.com

ANDREW M. HAYES
AR0016166

andrew m. hayes, aia, leed bd+c

© Copyright - All Rights Reserved

members of
AIA
American Institute of Architects

CONSULTANT:

CLIENT / PROJECT NAME:

CITY OF KEY WEST

RENOVATION TO

FREDERICK DOUGLASS RECREATION CENTER

111 OLIVIA STREET
KEY WEST, FL 33040

BID SET

Original drawing is 24"x36". Scale accordingly if reduced.

SHEET TITLE:

ENLARGED PLANS

REVISIONS:

DATE ISSUED: 03/28/2016
PROJECT NO.: 12.0D01

DRAWING NUMBER:

A-402 SHEET: 38 OF 68

9/15/2015 5:13:37 PM

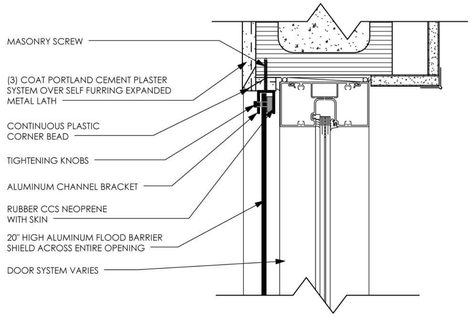

D1 FLOOD PANEL DETAIL
3" = 1'-0"

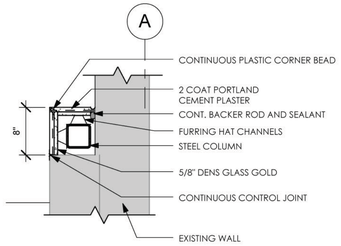

C1 ENTRY COLUMN DETAIL
1" = 1'-0"

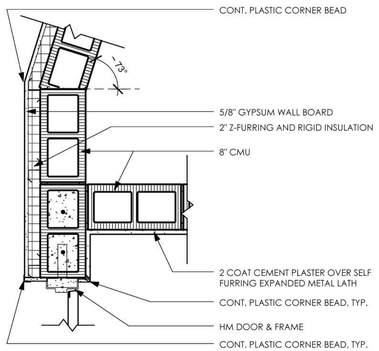

B1 PLAN DETAIL
1" = 1'-0"

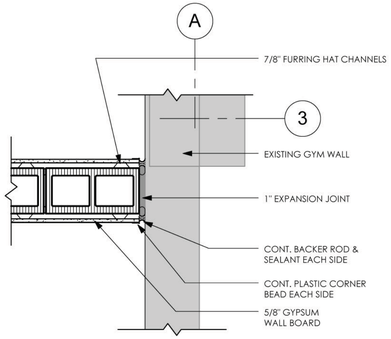

A1 TYPICAL WALL DETAIL
1" = 1'-0"

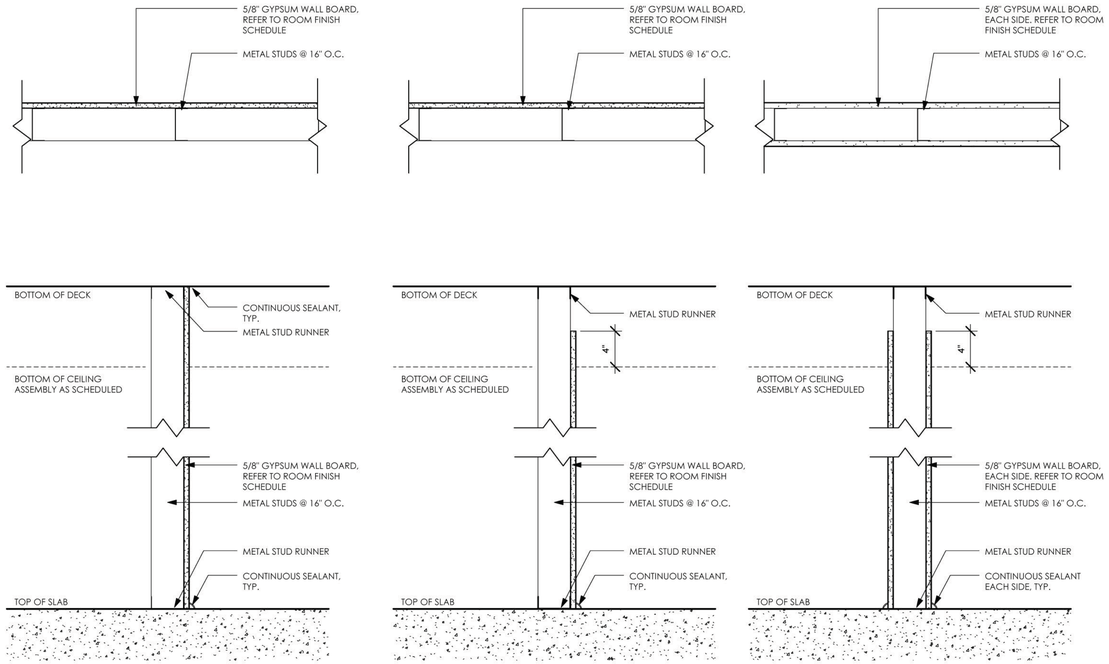

H3 FIRE RESISTANCE RATING: NONE
3 5/8" METAL STUD
5/8" GYPSUM WALL BOARD

J3 FIRE RESISTANCE RATING: NONE
3 5/8" METAL STUD
5/8" GYPSUM WALL BOARD

J6 FIRE RESISTANCE RATING: NONE
6" METAL STUD
5/8" GYPSUM WALL BOARD

E3 FIRE RESISTANCE RATING: NONE
3 5/8" METAL STUD
5/8" GYPSUM WALL BOARD, EACH SIDE

E6 FIRE RESISTANCE RATING: NONE
6" METAL STUD
5/8" GYPSUM WALL BOARD, EACH SIDE

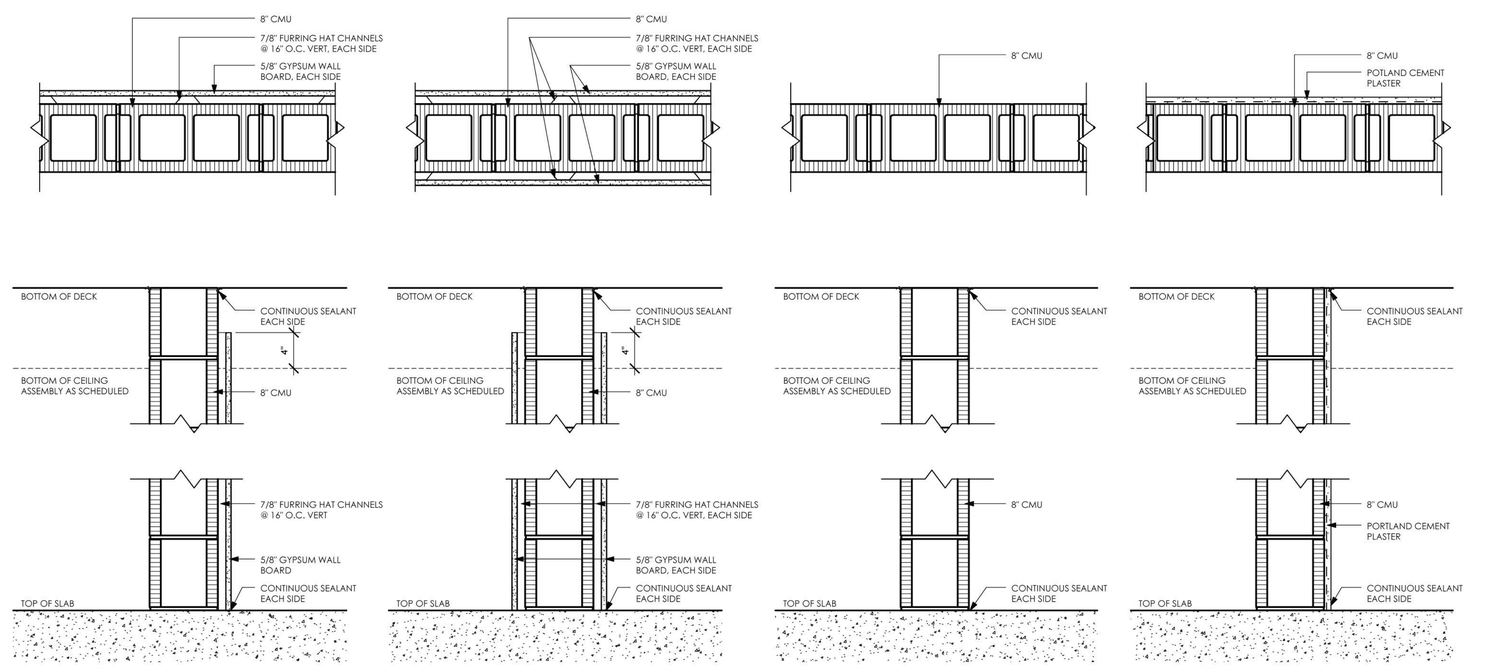

J8 FIRE RESISTANCE RATING: NONE
8" CMU
7/8" FURRING HAT CHANNEL
5/8" GYPSUM WALL BOARD

E8 FIRE RESISTANCE RATING: NONE
8" CMU
7/8" FURRING HAT CHANNEL, EACH SIDE
5/8" GYPSUM WALL BOARD, EACH SIDE

R8 FIRE RESISTANCE RATING: NONE
8" CMU

A8 FIRE RESISTANCE RATING: NONE
8" CMU
PORLAND CEMENT PLASTER

PARTITION TYPES
1 1/2" = 1'-0"

hayes | cumming
architects

2210 central ave, suite 100
st. petersburg, fl 33712
ph 727.321.0900
fx 727.321.0903

AA26001260
hc-arc.com

ANDREW M. HAYES
AR0016166

andrew m. hayes, aia, leed bd+c
© Copyright - All Rights Reserved

members of
AIA
American Institute of Architects

CONSULTANT:

CLIENT / PROJECT NAME:

CITY OF KEY WEST
RENOVATION TO

FREDERICK DOUGLASS RECREATION CENTER

111 OLIVIA STREET
KEY WEST, FL 33040

BID SET

Original drawing is 24"x36". Scale accordingly if reduced.

SHEET TITLE:

PLAN & PARTITION DETAILS

REVISIONS:

DATE ISSUED: 03/28/2016
PROJECT NO.: 12.0D01

DRAWING NUMBER:

A-501 SHEET: 39 OF 68

9/15/2015 5:13:40 PM

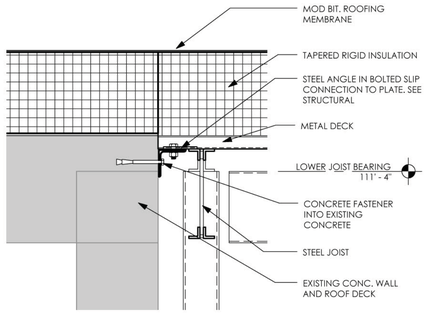

D1 ROOF DETAIL
1 1/2" = 1'-0"

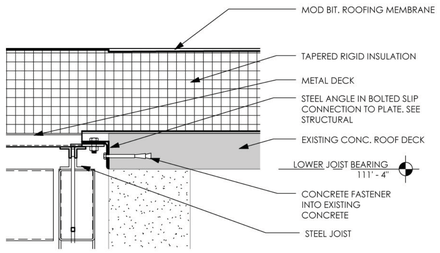

D2 ROOF DETAIL
1 1/2" = 1'-0"

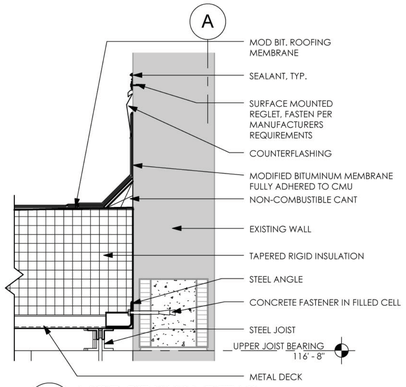

D4 MOD BIT WALL DETAIL
1 1/2" = 1'-0"

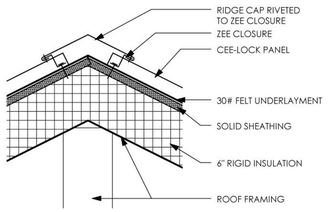

C1 GABLE RIDGE DETAIL
1 1/2" = 1'-0"

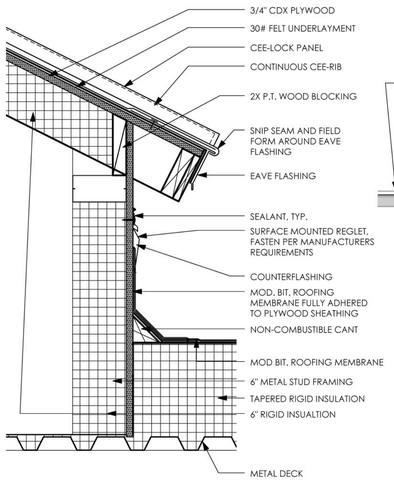

C2 GABLE DRIP EDGE DETAIL
1 1/2" = 1'-0"

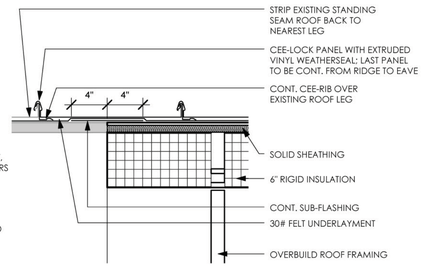

C3 STANDING SEAM ROOF DETAIL
1 1/2" = 1'-0"

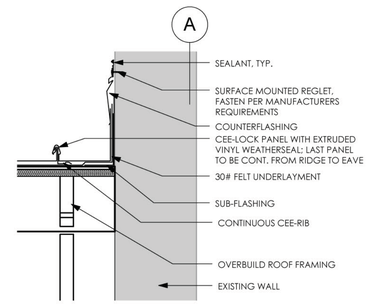

C4 STANDING SEAM SIDEWALL FLASHING DETAIL
1 1/2" = 1'-0"

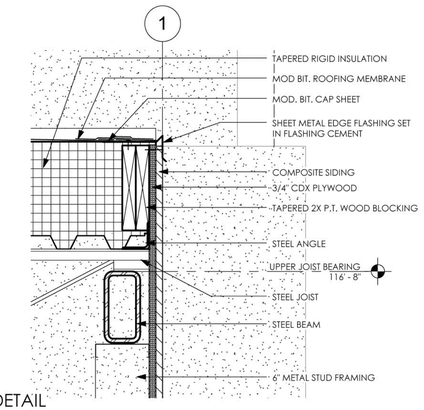

C5 ENTRY OVERBUILD WALL
1 1/2" = 1'-0"

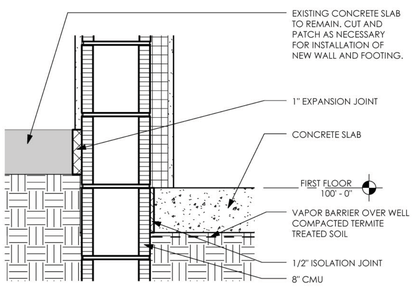

B1 WALL FLOOR DETAIL @ COMM ROOM
1 1/2" = 1'-0"

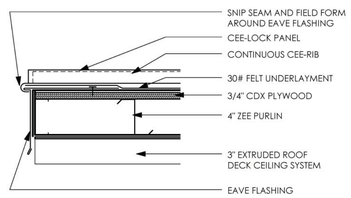

B2 CURVED ROOF EDGE DETAIL
1 1/2" = 1'-0"

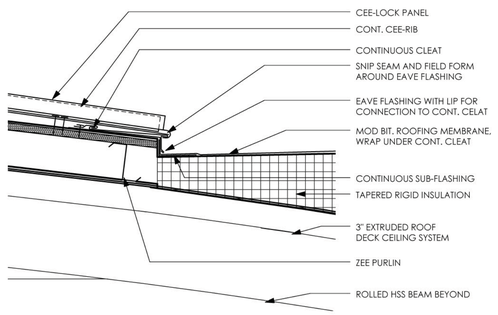

B3 MOD BIT TO CURVED ROOF DETAIL
1 1/2" = 1'-0"

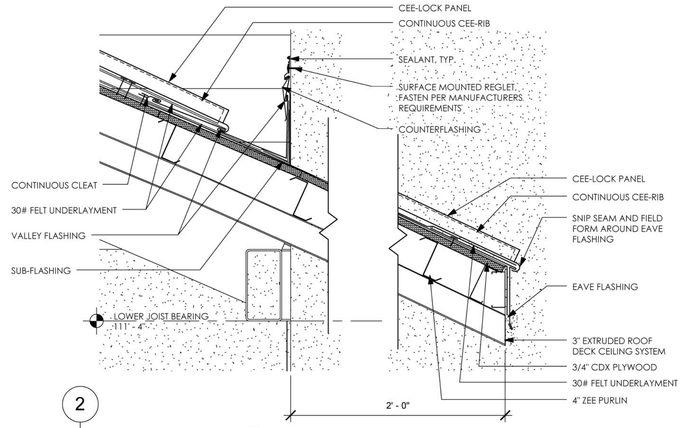

B5 CURVED ROOF AT GYM WALL
1 1/2" = 1'-0"

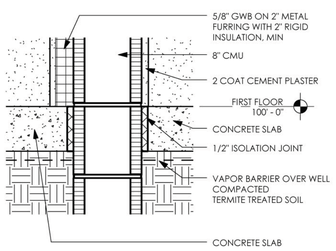

A1 WALL FLOOR DETAIL @ OFFICE
1 1/2" = 1'-0"

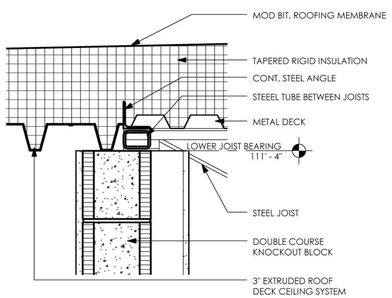

A3 ROOF WALL DETAIL @ NW EXIT
1 1/2" = 1'-0"

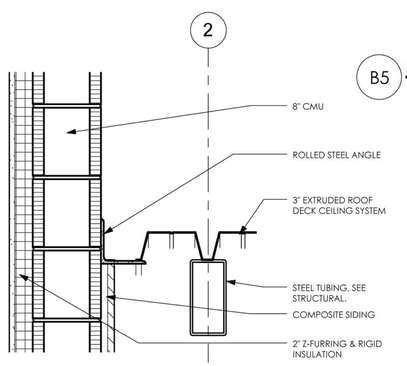

A4 CURVED ROOF WALL DETAIL 2
1 1/2" = 1'-0"

9/15/2015 5:13:48 PM

hayes | cumming
architects

2210 central ave, suite 100
st. petersburg, fl 33712
ph 727.321.0900
fx 727.321.0903

AA26001260
hc-arc.com

ANDREW M. HAYES
AR0016166

andrew m. hayes, aia, leed bd+c

© Copyright - All Rights Reserved

members of
AIA
American Institute of Architects

CONSULTANT:

CLIENT / PROJECT NAME:

CITY OF KEY WEST

RENOVATION TO

FREDERICK DOUGLASS RECREATION CENTER

111 OLIVIA STREET
KEY WEST, FL 33040

BID SET

Original drawing is 24"x36". Scale accordingly if reduced.

SHEET TITLE:

DETAILS

REVISIONS:

DATE ISSUED: 03/28/2016
PROJECT NO.: 12.0D01

DRAWING NUMBER:

A-502 SHEET: 40 OF 68

WINDOW & STOREFRONT SCHEDULE

MARK	WIDTH	HEIGHT	TYPE	MATL	FIN	GLZ	LINTEL HEIGHTS	HEAD DETAIL	JAMB DETAIL	SILL DETAIL	NOTES
A	16' - 8"	8' - 0"	TRANSLUCENT WALL SYSTEM	AL	AN	GL-1	17' - 10"	D4/A-602	C4/A-602	B4/A-602	
B	7' - 8"	8' - 0"	TRANSLUCENT WALL SYSTEM	AL	AN	GL-1	17' - 10"	D4/A-602	C4/A-602	B4/A-602	
C	15' - 0"	8' - 0"	TRANSLUCENT WALL SYSTEM	AL	AN	GL-1	17' - 10"	D4/A-602	C4/A-602	B4/A-602	
D	6' - 10"	8' - 0"	TRANSLUCENT WALL SYSTEM	AL	AN	GL-1	17' - 10"	D4/A-602	C4/A-602	B4/A-602	
E	6' - 0"	2' - 0"	STOREFRONT	AL	AN	GL-1	9' - 0"	D5/A-602	C5/A-602	B5/A-602	
F	14' - 0"	2' - 0"	STOREFRONT	AL	AN	GL-1	9' - 0"	D5/A-602	C5/A-602	B5/A-602	
G	17' - 8"	5' - 10"	TRANSLUCENT WALL SYSTEM	AL	AN	GL-1	8' - 10"	D4/A-602	C4/A-602	B4/A-602	
H	6' - 4"	9' - 0"	STOREFRONT	AL	AN	GL-1	9' - 0"	D5/A-602	C5/A-602	A4/A-602	
J	7' - 10 3/4"	9' - 0"	STOREFRONT	AL	AN	GL-1	9' - 0"	D5/A-602	C5/A-602	A4/A-602	
K	6' - 8"	4' - 0"	STOREFRONT	AL	AN	GL-1	7' - 0"	D5/A-602	C5/A-602	B5/A-602	

NOTE: WINDOW MULLIONS TO BE CLEAR ANODIZED ALUMINUM

WINDOW AND FRAME CODE LIST

MATERIAL		FINISH		GLAZING TYPE	
AL	ALUMINUM	AN	ANODIZED	GL-1	IMPACT RESISTANT
				GL-2	TEMPERED

STOREFRONT ELEVATIONS

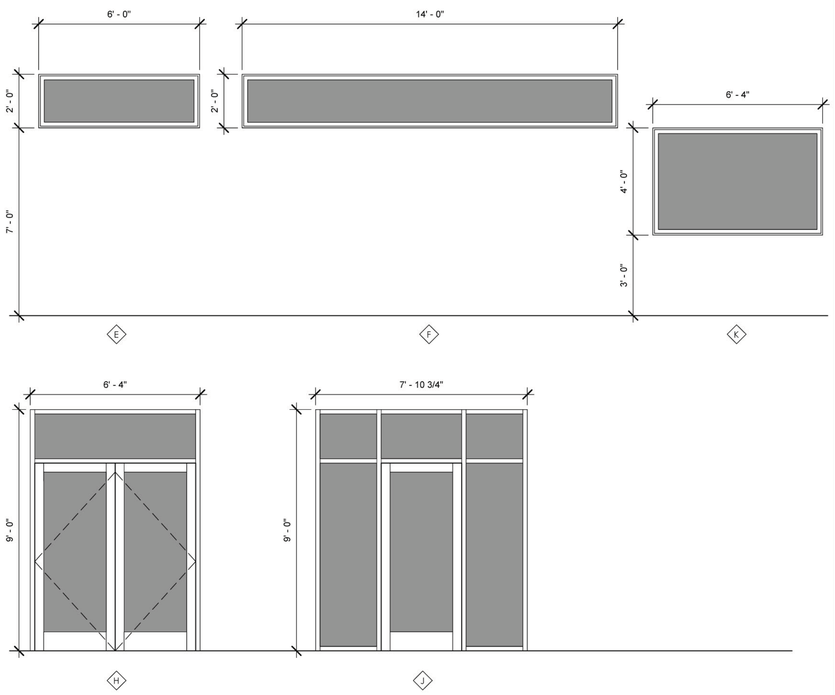

DOOR SCHEDULE

MARK	DOOR WIDTH	DOOR HEIGHT	DOOR THICKNESS	DOOR MATERIAL	DOOR FINISH	DOOR ELEV	GLZ	LOUVER W	LOUVER HT	FRAME ELEV	FRAME MATERIAL	FRAME FINISH	FRAME HEAD DETAIL	FRAME JAMB DETAIL	THRES DETAIL	FIRE RATING	HARDWARE SET NO	NOTES
101A	3' - 0"	7' - 0"		AL	AN	D	GL-1				AL	AN	D5/A-602	C5/A-602	A5/A-602		1	PROVIDE FLOOD PANEL, SEE DETAIL D1/A-501
101B	3' - 0"	7' - 0"		AL	AN	D	GL-1				AL	AN	D5/A-602	C5/A-602	A5/A-602		1	PROVIDE FLOOD PANEL, SEE DETAIL D1/A-501
101C	3' - 0"	7' - 0"		AL	AN	D	GL-1				AL	AN	D5/A-602	C5/A-602	A5/A-602		2	PROVIDE FLOOD PANEL, SEE DETAIL D1/A-501
102A	3' - 0"	7' - 0"	0' - 1 3/4"	HM	P	B				FA	HM	P	B1/A-602	A1/A-602			5	
103A	3' - 0"	7' - 0"	0' - 1 3/4"	HM	P	B				FA	HM	P	B1/A-602	A1/A-602			5	
104A	3' - 0"	7' - 0"	0' - 1 3/4"	HM	P	A	GL-1			FA	HM	P	D2/A-602	C2/A-602	A3/A-602		6	PROVIDE FLOOD PANEL, SEE DETAIL D1/A-501
106A	3' - 0"	7' - 0"	0' - 1 3/4"	HM	P	B				FA	HM	P	D3/A-602	C3/A-602			5	
107A	3' - 0"	6' - 8"	0' - 1 3/4"	SC	P	C	GL-2			FA	WD	P	ETR	ETR			ETR	EXISTING DOOR TO REMAIN
108A	3' - 0"	6' - 8"	0' - 1 3/4"	SC	P	C	GL-2			FA	WD	P	ETR	ETR			ETR	EXISTING DOOR TO REMAIN
109A	2' - 0"	6' - 8"	0' - 1 3/4"	SC	P	B				FA	WD	P	ETR	ETR			ETR	EXISTING DOOR TO REMAIN
111A	3' - 0"	7' - 0"		AL	AN	D	GL-2				AL	AN	D5/A-602	C5/A-602			3	
111B	3' - 0"	7' - 0"	0' - 1 3/4"	HM	P	A	GL-2			FA	HM	P	B1/A-602	A1/A-602			4	
112A	3' - 0"	7' - 0"	0' - 1 3/4"	HM	P	B				FA	HM	P	B1/A-602	A1/A-602			5	
113A	3' - 0"	7' - 0"	0' - 1 3/4"	HM	P	A	GL-2			FA	HM	P	B1/A-602	A1/A-602			4	
113B	3' - 0"	7' - 0"	0' - 1 3/4"	HM	P	A	GL-2			FA	HM	P	B1/A-602	A1/A-602			4	
114A	3' - 0"	7' - 0"	0' - 1 3/4"	HM	P	B				FA	HM	P	D2/A-602	C2/A-602	A3/A-602		6	PROVIDE FLOOD PANEL, SEE DETAIL D1/A-501
115A	3' - 0"	7' - 0"	0' - 1 3/4"	HM	P	B				FA	HM	P	B1/A-602	A1/A-602			4	
116A	3' - 0"	7' - 0"	0' - 1 3/4"	HM	P	B				FA	HM	P	B1/A-602	A1/A-602			4	
117A	3' - 0"	7' - 0"	0' - 1 3/4"	HM	P	B				FA	HM	P	B1/A-602	A1/A-602			7	
118A	3' - 0"	7' - 0"	0' - 1 3/4"	HM	P	B				FA	HM	P	D3/A-602	C3/A-602			4	
119A	6' - 0"	7' - 0"	0' - 1 3/4"	HM	P	BB				FA	HM	P	B2/A-602	A2/A-602	A3/A-602		8	
120A	3' - 0"	6' - 8"	0' - 1 3/4"	HM	P	B				FA	HM	P	D1/A-602	C1/A-602			4	REUSE EXISTING DOOR

DOOR AND FRAME CODE LIST

DOOR MATERIAL		DOOR FINISH		FRAME MATERIAL		FRAME FINISH		GLAZING TYPE	
HM	HOLLOW METAL	P	PAINTED	M	METAL	P	PAINTED	GL-1	CLEAR IMPACT RESISTANT
SC	SOLID CORE WOOD	AN	ANODIZED	WD	WOOD	AN	ANODIZED	GL-2	CLEAR TEMPERED GLASS
AL	ALUMINUM			AL	ALUMINUM				

DOOR ELEVATIONS

*SEE DOOR SCHEDULE FOR ALL WIDTHS & HEIGHTS

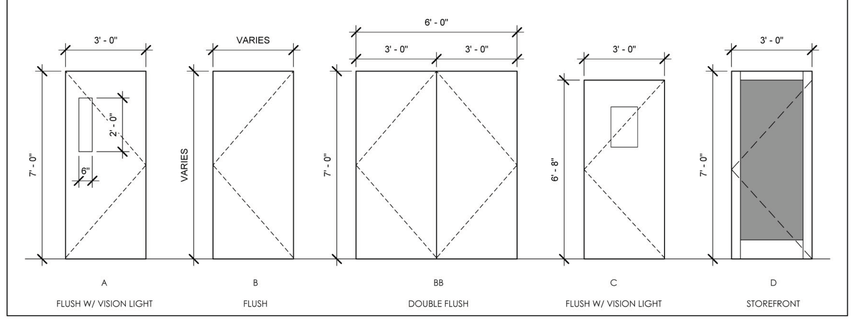

DOOR FRAME ELEVATIONS

*SEE DOOR SCHEDULE FOR ALL DOOR WIDTHS & HEIGHTS

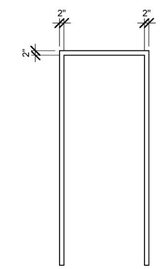

TRANSLUCENT PANEL SYSTEM ELEVATIONS

*SEE DOOR SCHEDULE FOR ALL WIDTHS & HEIGHTS

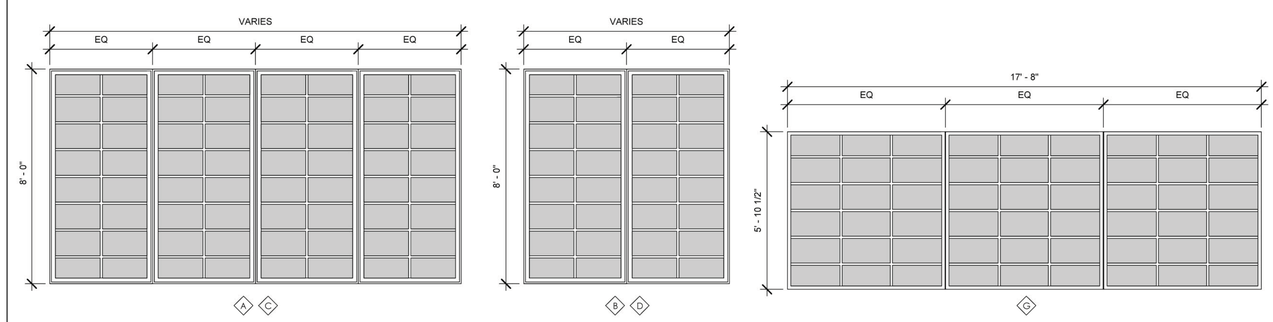

hayes | cumming
architects

2210 central ave, suite 100
st. petersburg, fl 33712
ph 727.321.0900
fx 727.321.0903

AA26001260
hc-arc.com

ANDREW M. HAYES
AR0016166

andrew m. hayes, aia, leed bd+c

© Copyright - All Rights Reserved

members of
AIA
American Institute of Architects

CONSULTANT:

CLIENT / PROJECT NAME:

CITY OF KEY WEST

RENOVATION TO

FREDERICK DOUGLASS RECREATION CENTER

111 OLIVIA STREET
KEY WEST, FL 33040

BID SET

Original drawing is 24"x36". Scale accordingly if reduced.

SHEET TITLE:

DOOR & WINDOW SCHEDULES

REVISIONS:

DATE ISSUED: 03/28/2016
PROJECT NO.: 12.0D01

DRAWING NUMBER:

A-601

9/15/2015 5:13:51 PM

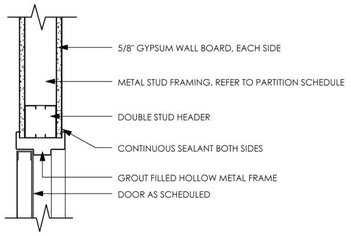

D1 DOOR HEAD @ STUD
1 1/2" = 1'-0"

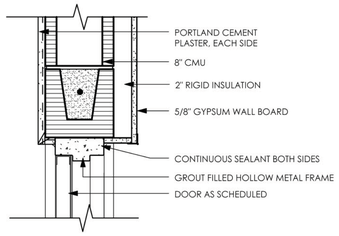

D2 DOOR HEAD DETAIL @ EXTERIOR CMU
1 1/2" = 1'-0"

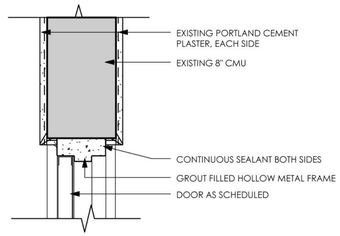

D3 DOOR HEAD DETAIL EXISTING WALL
1 1/2" = 1'-0"

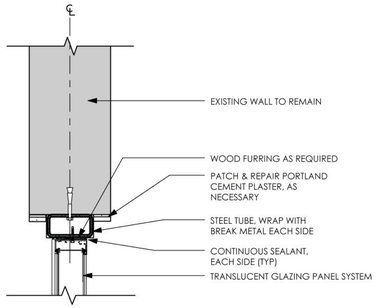

D4 TRANSLUCENT GLAZING PANEL HEAD DETAIL
1 1/2" = 1'-0"

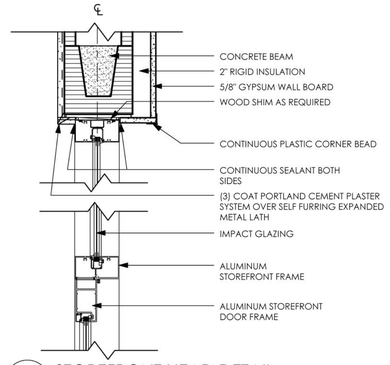

D5 STOREFRONT HEAD DETAIL
1 1/2" = 1'-0"

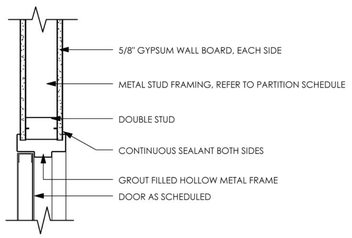

C1 DOOR JAMB @ STUD
1 1/2" = 1'-0"

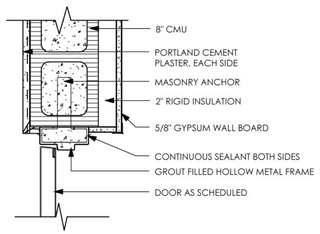

C2 DOOR JAMB DETAIL @ EXTERIOR CMU
1 1/2" = 1'-0"

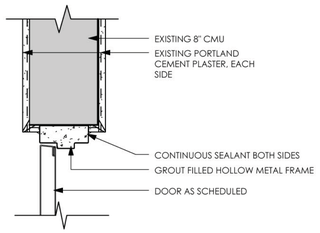

C3 DOOR JAMB DETAIL EXISTING WALL
1 1/2" = 1'-0"

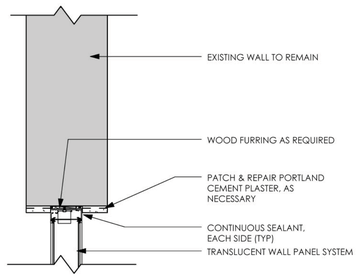

C4 TRANSLUCENT GLAZING PANEL JAMB DETAIL
1 1/2" = 1'-0"

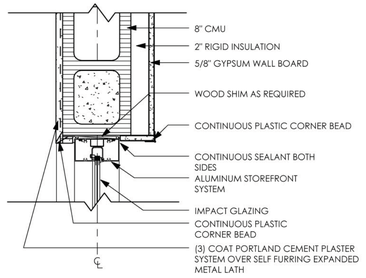

C5 STOREFRONT JAMB IN CMU
1 1/2" = 1'-0"

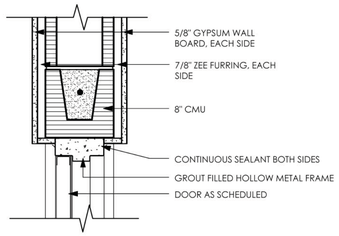

B1 DOOR HEAD DETAIL @ INT. CMU
1 1/2" = 1'-0"

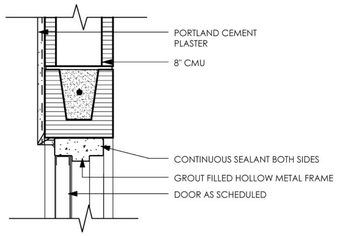

B2 DOOR HEAD DETAIL @ STORAGE CMU
1 1/2" = 1'-0"

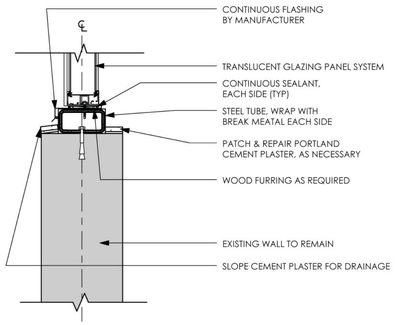

B4 TRANSLUCENT GLAZING PANEL SILL DETAIL
1 1/2" = 1'-0"

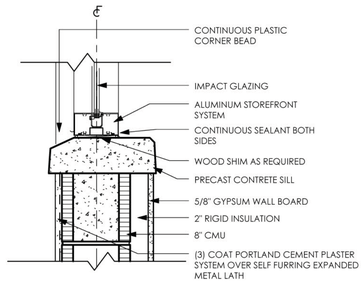

B5 STOREFRONT SILL DETAIL
1 1/2" = 1'-0"

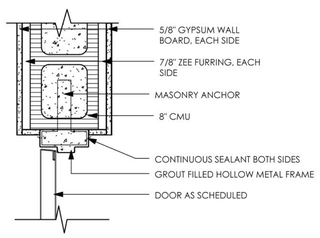

A1 DOOR JAMB DETAIL @ INT. CMU
1 1/2" = 1'-0"

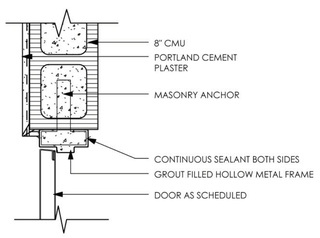

A2 DOOR JAMB DETAIL @ STORAGE CMU
1 1/2" = 1'-0"

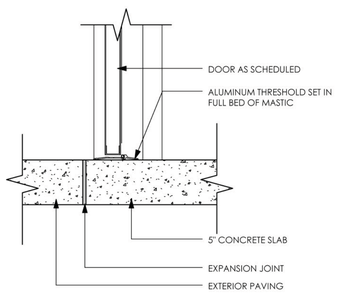

A3 DOOR THRESHOLD DETAIL
1 1/2" = 1'-0"

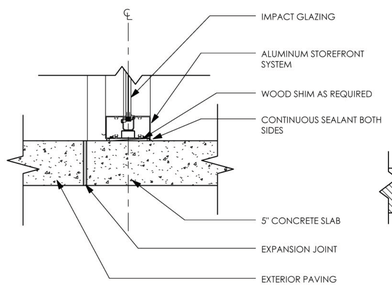

A4 STOREFRONT SILL SLAB DETAIL
1 1/2" = 1'-0"

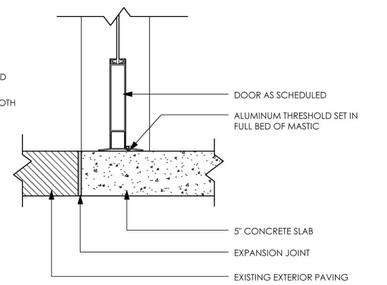

A5 STOREFRONT THRESHOLD DETAIL
1 1/2" = 1'-0"

9/15/2015 5:13:55 PM

hayes | cumming
architects

2210 central ave, suite 100
st. petersburg, fl 33712
ph 727.321.0900
fx 727.321.0903

AA26001260
hc-arc.com

ANDREW M. HAYES
AR0016166

andrew m. hayes, aia, leed bd+c
© Copyright - All Rights Reserved

members of
AIA
American Institute of Architects

CONSULTANT:

CLIENT / PROJECT NAME:

CITY OF KEY WEST
RENOVATION TO

FREDERICK DOUGLASS RECREATION CENTER

111 OLIVIA STREET
KEY WEST, FL 33040

BID SET

Original drawing is 24"x36". Scale accordingly if reduced.

SHEET TITLE:

DOOR & WINDOW DETAILS

REVISIONS:

DATE ISSUED: 03/28/2016
PROJECT NO.: 12.0D01

DRAWING NUMBER:

A-602 SHEET: 42 OF 68

SHEET KEYNOTES

1	MECHANICAL DIFFUSER
2	CRACKING EVIDENT TO WALL AND COLUMNS AT ELEVATION OF ROOF TO BE DEMOLISHED. GENERAL CONTRACTOR TO PROVIDE BRACING OF WALL PRIOR TO DEMOLITION. ENSURE ROOF LOAD TO EXISTING WALL TO REMAIN IS REMOVED GRADUALLY TO PREVENT FURTHER DAMAGE.
3	EXISTING STEEL TRUSS
4	EXISTING GYPSUM CEILING SOFFIT
5	HI-LO DRINKING FOUNTAIN
6	METAL STUD INFILL, PATCH AND REPAIR PLASTER TO MATCH EXISTING
7	TRANSLUCENT GLAZING SYSTEM
8	EXISTING WHEELCHAIR LIFT TO REMAIN
9	EXISTING FANS TO BE REMOVED; 6" METAL STUD INFILL WITH CEMENT PLASTER EACH SIDE, ALIGN WITH INTERIOR FINISH

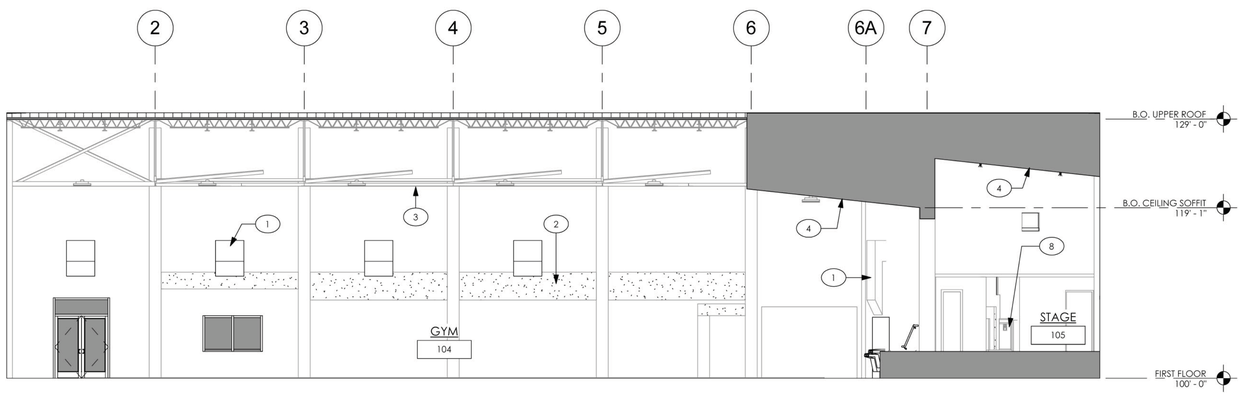

C1 INTERIOR ELEVATION - 104 WEST
1/8" = 1'-0"

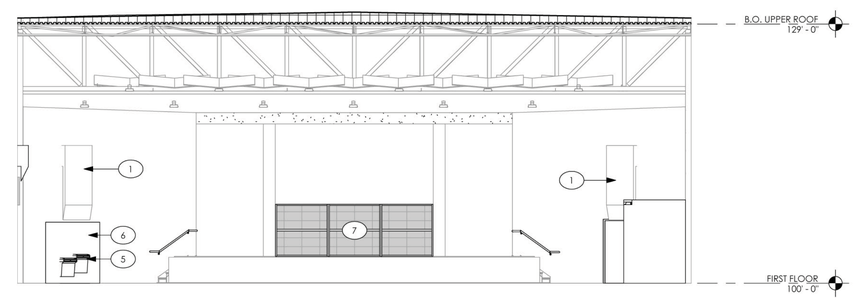

C4 INTERIOR ELEVATION - 104 NORTH
1/8" = 1'-0"

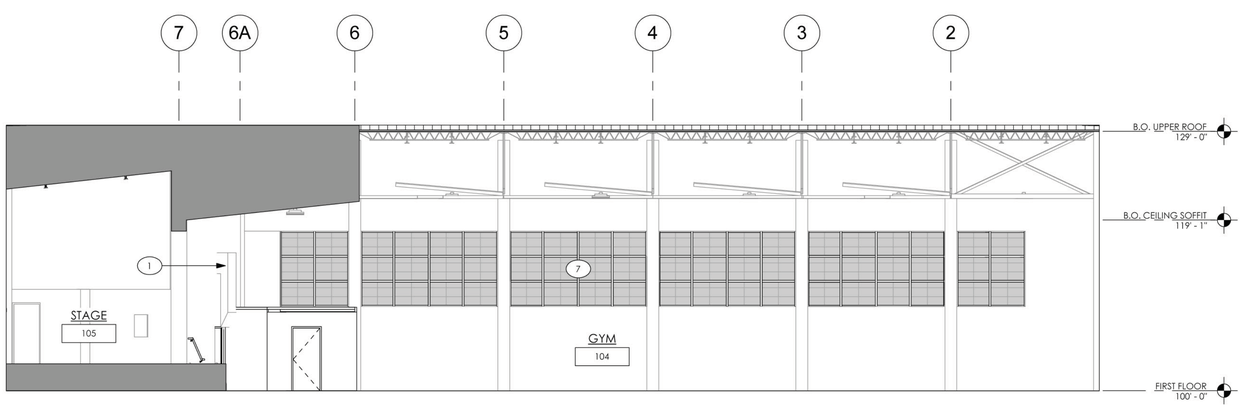

A1 INTERIOR ELEVATION - 104 EAST
1/8" = 1'-0"

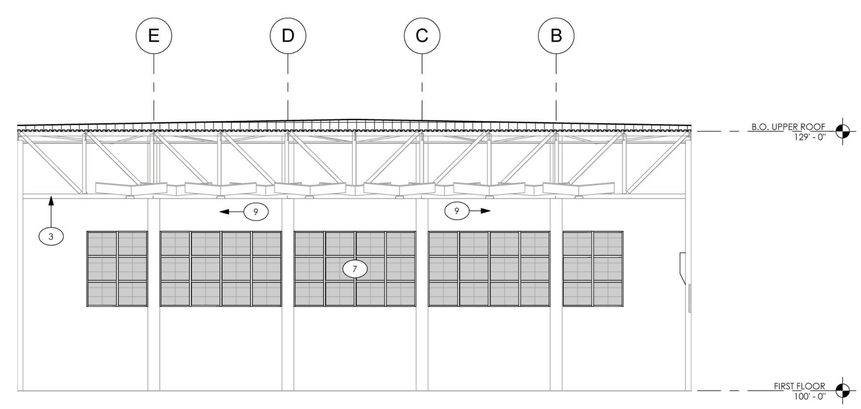

A4 INTERIOR ELEVATION - 104 SOUTH
1/8" = 1'-0"

hayes | cumming
architects

2210 central ave, suite 100
st. petersburg, fl 33712
ph 727.321.0900
fx 727.321.0903

AA26001260
hc-arc.com

ANDREW M. HAYES
AR0016166

andrew m. hayes, aia, leed bd+c

© Copyright - All Rights Reserved

members of
AIA
American Institute of Architects

CONSULTANT:

CLIENT / PROJECT NAME:

CITY OF KEY WEST

RENOVATION TO

FREDERICK DOUGLASS RECREATION CENTER

111 OLIVIA STREET
KEY WEST, FL 33040

BID SET

Original drawing is 24"x36". Scale accordingly if reduced.

SHEET TITLE:

INTERIOR ELEVATIONS

REVISIONS:

DATE ISSUED: 03/28/2016
PROJECT NO.: 12.0D01

DRAWING NUMBER:

A-701 SHEET: 43 OF 68

9/15/2015 5:14:03 PM

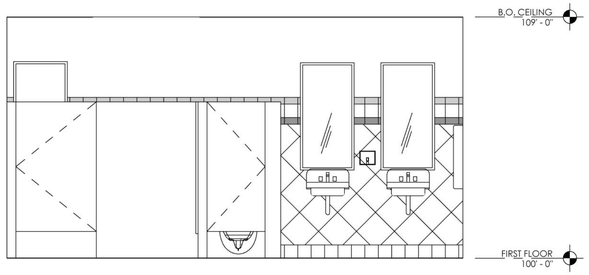

D1 INTERIOR ELEVATION - 116 NORTH
3/8" = 1'-0"

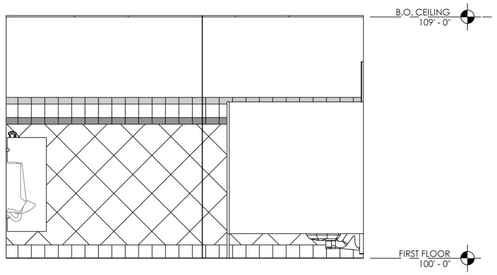

D2 INTERIOR ELEVATION - 116 EAST
3/8" = 1'-0"

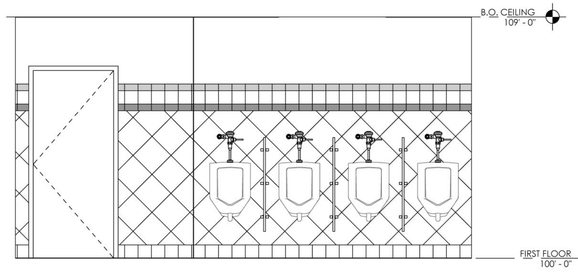

D3 INTERIOR ELEVATION - 116 SOUTH
3/8" = 1'-0"

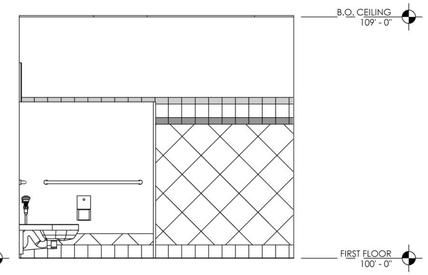

D4 INTERIOR ELEVATION - 116 WEST
3/8" = 1'-0"

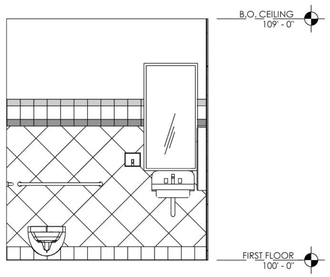

C1 INTERIOR ELEVATION - 117 NORTH
3/8" = 1'-0"

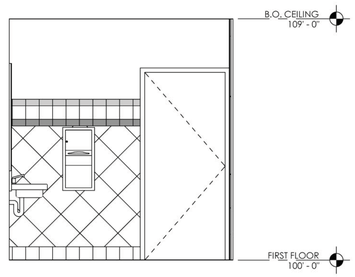

C2 INTERIOR ELEVATION - 117 EAST
3/8" = 1'-0"

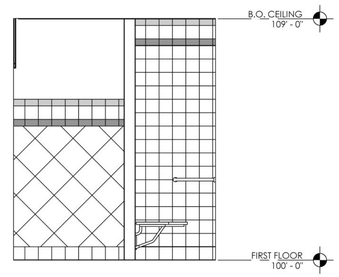

C3 INTERIOR ELEVATION - 117 SOUTH
3/8" = 1'-0"

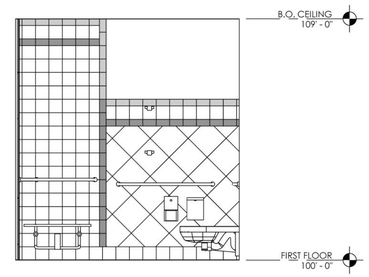

C4 INTERIOR ELEVATION - 117 WEST
3/8" = 1'-0"

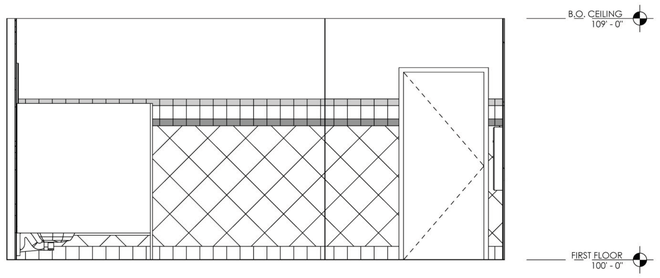

B1 INTERIOR ELEVATION - 115 NORTH
3/8" = 1'-0"

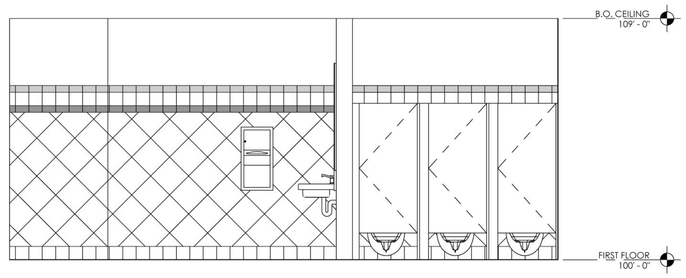

B2 INTERIOR ELEVATION - 115 EAST
3/8" = 1'-0"

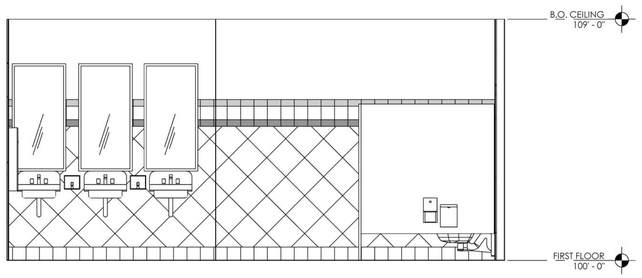

A1 INTERIOR ELEVATION - 115 SOUTH
3/8" = 1'-0"

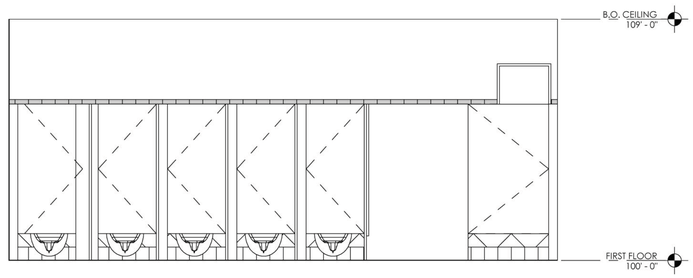

A2 INTERIOR ELEVATION - 115 WEST
3/8" = 1'-0"

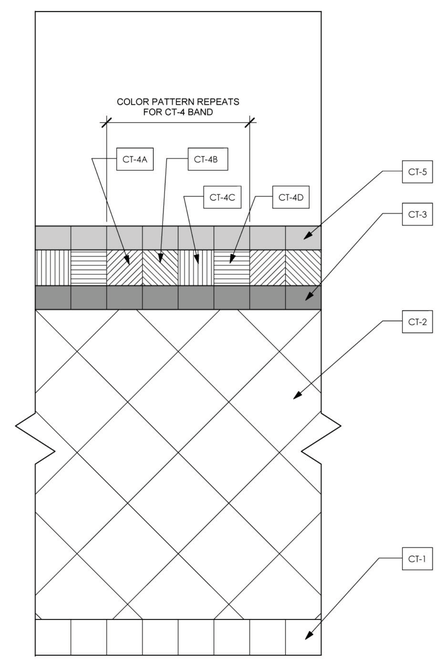

A4 WALL TILE DETAIL
1" = 1'-0"

9/15/2015 5:14:11 PM

hayes | cumming
architects

2210 central ave, suite 100
st. petersburg, fl 33712
ph 727.321.0900
fx 727.321.0903

AA26001260
hc-arc.com

ANDREW M. HAYES
AR0016166

andrew m. hayes, aia, leed bd+c
© Copyright - All Rights Reserved

members of
AIA
American Institute of Architects

CONSULTANT:

CLIENT / PROJECT NAME:

CITY OF KEY WEST

RENOVATION TO

FREDERICK DOUGLASS RECREATION CENTER

111 OLIVIA STREET
KEY WEST, FL 33040

BID SET

Original drawing is 24"x36". Scale accordingly if reduced.

SHEET TITLE:

INTERIOR ELEVATIONS

REVISIONS:

DATE ISSUED: 03/28/2016
PROJECT NO.: 12.0D01

DRAWING NUMBER:

A-702 SHEET: 44 OF 68

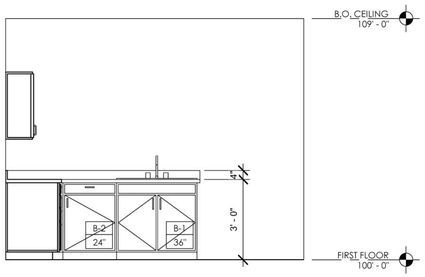

D1 INTERIOR ELEVATION - 113 NORTH
3/8" = 1'-0"

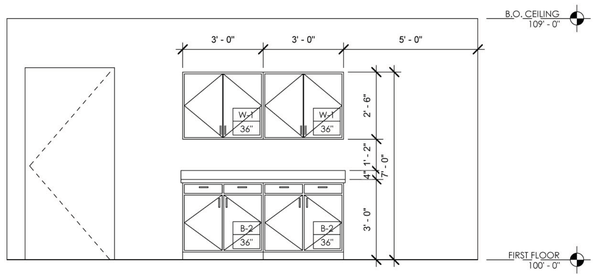

D2 INTERIOR ELEVATION - 113 EAST
3/8" = 1'-0"

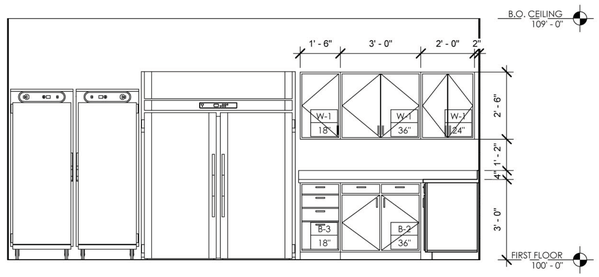

D3 INTERIOR ELEVATION - 113 WEST
3/8" = 1'-0"

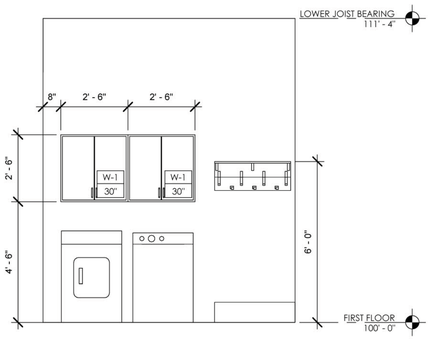

C1 INTERIOR ELEVATION - 118 SOUTH
3/8" = 1'-0"

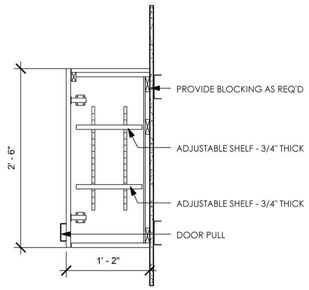

W-1 CASEWORK WALL CABINET W-1
1" = 1'-0"

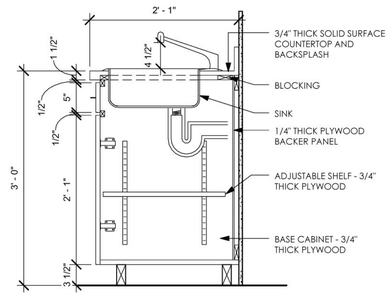

B-1 BASE CABINET B-1
1" = 1'-0"

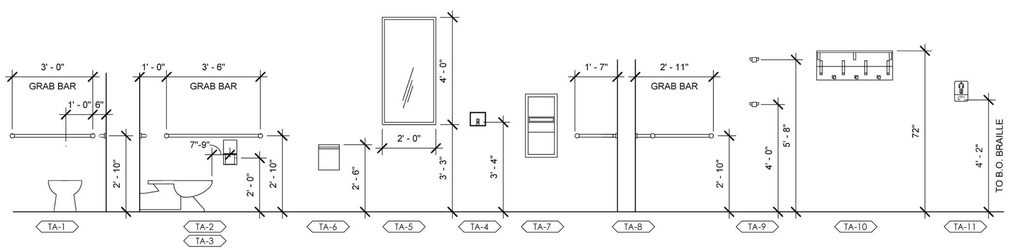

D3 PLUMBING ACCESSORIES - MOUNTING HEIGHTS
3/8" = 1'-0"

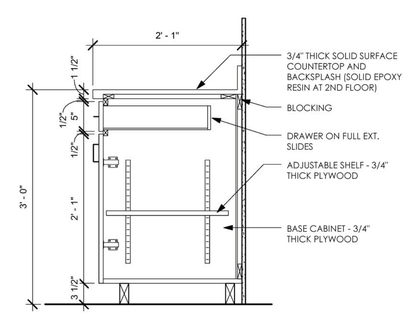

B-2 CASEWORK BASE CABINET B-2
1" = 1'-0"

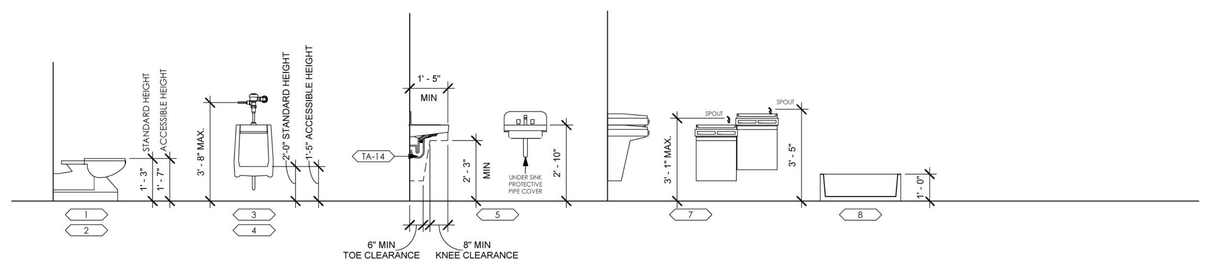

C3 PLUMBING FIXTURES - MOUNTING HEIGHTS
3/8" = 1'-0"

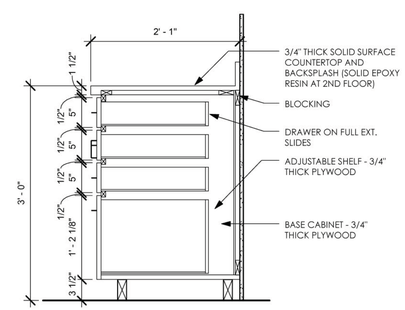

B-3 CASEWORK BASE CABINET B-3
1" = 1'-0"

CASEWORK FINISH MATERIALS LEGEND

1. COUNTERTOP FINISHES & COLORS
   FINISH:
   COLOR:
2. CASEWORK FINISHES & COLORS
   FINISH:
   COLOR:

GENERAL NOTES

1. CASEWORK FABRICATOR TO CONSULT SPECIFICATIONS PRIOR TO START OF WORK.
2. PROVIDE COLOR SAMPLES OF ALL WOOD, PLASTIC LAMINATE AND SOLID SURFACE MATERIAL PRIOR TO PROCUREMENT. ALLOW FOR ARCHITECT REVIEW TIME OF 15 CALENDAR DAYS.

CABINET NOTES

1. CABINETRY CONTRACTOR TO FIELD VERIFY ALL DIMENSIONS
2. COUNTERTOP MATERIAL: AS NOTED IN MATERIALS LEGEND
3. CASEWORK FABRICATION MATERIAL: AS NOTED ON DRAWINGS AND IN SPECIFICATIONS.
4. FULL OVERLAY DOORS & DRAWERS
5. NO BLIND CORNERS UTILIZE ALL SPACE
6. TYPICAL DRAWER SLIDES TO BE FULL EXTENSION & BALL-BEARING WITH QUIET CLOSERS
7. CONTRACTOR TO VERIFY OPENINGS FOR APPLIANCES PRIOR TO FABRICATION OF CABINETS
8. DOOR AND DRAWER HARDWARE : 4" SIMPLE WIDE PULL WITH BRUSHED METAL FINISH
9. PLUMBING FIXTURES: SEE PLUMBING EQUIPMENT SCHEDULE
10. COUNTERS TO HAVE FORMED BACKSPLASH & ROLLED NOSE

CABINET LEGEND

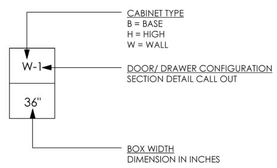

hayes | cumming
architects

2210 central ave, suite 100
st. petersburg, fl 33712
ph 727.321.0900
fx 727.321.0903

AA26001260
hc-arc.com

ANDREW M. HAYES
AR0016166

andrew m. hayes, aia, leed bd+c

© Copyright - All Rights Reserved

members of
AIA
American Institute of Architects

CONSULTANT:

CLIENT / PROJECT NAME:

CITY OF KEY WEST

RENOVATION TO

FREDERICK DOUGLASS RECREATION CENTER

111 OLIVIA STREET
KEY WEST, FL 33040

BID SET

Original drawing is 24"x36". Scale accordingly if reduced.

SHEET TITLE:

INTERIOR ELEVATIONS & MILLWORK

REVISIONS:

DATE ISSUED: 03/28/2016
PROJECT NO.: 12.0D01

DRAWING NUMBER:

A-703 SHEET: 45 OF 68

9/15/2015 5:14:14 PM

ENGCO Inc.
Engineering Services

ENGCO, Inc.
CA 8116
5595 Orange Drive suite 201
Davie – Florida 33314
Tel.: (954) 585-0304 Fax: (954) 585-0305
Engco@ aol.com

PRODUCT EVALUATION REPORT
RULE 9B-72.070 (1) (d) – EVALUATION REPORT FROM A PROFESSIONAL ENGINEER
Report Number: 11-246

1- Date: 12/15/2011

2- Manufacturer: Major Industries Inc.
7120 Stewart Ave. – Wassau, Wi - 54402

3- Product Name: Guardian 275 Translucent Hurricane Wall System

4- Evaluation Entity: Florida Professional Engineer
Pedro Paulo M. De Figueiredo – PE 52609
5595 Orange Drive suite 201
Davie – Florida – 33314

5- Statement of Compliance: This product evaluation report is being issued per Rule Chapter No. 9B-72 section 9B-72.070 (1) (d) of the Department of Community Affairs – Florida Building Commission. The products covered by this report have proven to be in compliance with the Florida Building Code 2010, included but not limited to the following standards: ASTM E330, ASTM E1996 and ASTM E1886.

6- Product Description: This product is a translucent wall composed of a panel made of fiberglass and aluminum secured by an aluminum perimeter framing. The system is level D impact resistant and tested for use in wind zone 3 as per the ASTM E1996-05 modified by FBC 2010 section 1609.1.2.4. The product is designed, constructed and tested to provide protection from hurricane force winds and wind borne debris within the allowable designed pressures and limitations state in this approval. Specification, fabrication and installation are as per drawings 11-246.

7- Technical Documentation:

7.1- Approval Document: Drawings number 11-246 prepared by Engco, Inc. on 12/15/2011 sheets 1 through 6 of 6, titled "Guardian 275 Translucent Hurricane Wall Systems" signed and sealed by Pedro De Figueiredo, PE.

7.2- Test Reports – ASTM E330, ASTM E1996 and ASTM E1886 as per the Florida Building Code 2010 prepared by Stork Twin City Testing, reports #: 180-7933.1 and 180-7933.2 Rev. A.

7.3- Calculations: Calculations and design for framing anchorage and analysis of test results, prepared by Engco, Inc. on 3/26/2010 signed and sealed by Pedro De Figueiredo, PE.

8- Limitation and Conditions of use:

8.1 – Product to be manufactured, designed and installed as per drawing specifications 11-246, prepared by Engco, Inc dated on 12/15/2011 and signed and sealed by Pedro De Figueiredo, PE.

9- Others:

PEDRO M. DE FIGUEIREDO LICENSE No. 52609 STATE OF FLORIDA PROFESSIONAL ENGINEER
DEC 15 2011
Pedro De Figueiredo
Fl. P.E. License: 52609
System ID: 2504

GENERAL NOTES: FLORIDA BUILDING CODE 2010

1- CODE: THIS PRODUCT HAS BEEN TESTED AND DESIGNED IN ACCORDANCE WITH THE FLORIDA BUILDING CODE 2010 EDITION NON HVHZ (HIGH VELOCITY HURRICANE ZONES) LIMITED TO AREAS WHERE WIND SPEED IS LESS OR EQUAL THAN 160 MPH (WIND ZONE 3 AS PER FBC 1609.1.2.4 MODIFICATIONS TO ASTM E1996).

2- DEFINITION: THIS PRODUCT IS A TRANSLUCENT WALL COMPOSED OF A PANEL MADE OF FIBERGLASS AND ALUMINUM SECURED BY AN ALUMINUM PERIMETER FRAMING. THE SYSTEM IS LEVEL D IMPACT RESISTANT AND TESTED FOR USE IN ZONE 3 OF THE ASTM E 1996.

3- POSTING: A PERMANENT LABEL SHALL BE PROVIDED AS PER FBC 2010 SECTION 1703.5. IT SHALL BE PLACED ON A READILY VISIBLE LOCATION AND A MINIMUM OF ONE LABEL PER OPENING.

4- DESIGN LOADS: LOADS MUST BE CALCULATED BY A PROFESSIONAL ARCHITECT OR ENGINEER FOR EACH SPECIFIC PROJECT. THE CALCULATED DESIGNED PRESSURE MUST NOT EXCEED THE ALLOWABLE APPROVED PRESSURE.

5- MATERIAL: ALL ALUMINUM PARTS ARE MADE MADE OF 6063-T5 ALLOY AND FIBERGLASS MATERIAL TESTED IN ACCORDANCE WITH FBC CHAPTER 26.

6- FASTENERS: ASSEMBLY SCREWS AND ANCHORS SHALL BE AS SPECIFIED IN THIS CURRENT SET OF DRAWINGS.

7- USE: IT SHALL BE THE RESPONSIBILITY OF THE CONTRACTOR, ARCHITECT OR ENGINEER OF RECORD TO VERIFY THE FOLLOWING:
7.1- THE STABILITY OF THE STRUCTURE WHERE THE UNIT IS TO BE ATTACHED INSURING PROPER ANCHORAGE.
7.2- THE SITE SPECIFIC PROJECT CRITERIA, SUCH AS BUT NOT LIMITED TO, LOCAL CODE REQUIREMENTS, DESIGNED PRESSURES ETC.
7.3- THAT THIS APPROVAL IS ADEQUATE TO THE SPECIFIC PROJECT.

8- 33 1/3% INCREASE IN ALLOWABLE LOADS HAVE NOT BEEN USED IN THE DESIGN OF THE ANCHORS FOR THIS PRODUCT APPROVAL. LOAD DURATION FACTOR OF 1.6 WAS USED FOR ANCHORS INTO WOOD.

9- DISSIMILAR MATERIALS: MATERIALS, INCLUDING BUT NOT LIMITED TO STEEL, THAT COME IN CONTACT WITH OTHER DISSIMILAR MATERIALS SHALL MEET THE REQUIREMENTS OF 2010 FLORIDA BUILDING CODE.

10- WOOD BUCKS (1x or 2x) BY OTHERS, MUST BE ANCHORED PROPERLY TO TRANSFER LOADS TO THE STRUCTURE.

PRODUCT RATING:

DESIGNED PRESSURE:
DEAD LOAD: DL= 3 PSF
WIND LOAD: WL= ±65 PSF

MISSILE IMPACT:
LEVEL D - 9 LB 2X4 LUMBER AT 50 f/s
WIND ZONE 3 BASIC WIND SPEED <= 160 MPH

LIMITATIONS:
1- NOT FOR USE IN HIGH VELOCITY HURRICANE ZONES (HVHZ), BROWARD & MIAMI-DADE COUNTIES)
2- NOT APPLICABLE FOR WIND ZONE 4, BASIC WIND SPEED > 160 MPH
3- MAXIMUM PANEL AREA MUST NOT EXCEED 40 SQF (60"X96")

TABLE OF CONTENTS:

SHEET	DESCRIPTION
1 of 6	GENERAL NOTES & RATING
2 of 6	TYPICAL CONFIGURATIONS
3 of 6	DETAILS 1, 2 AND 3
4 of 6	MULLION CONNECTION DETAIL 4
5 of 6	FRAMING ANCHORAGE OPTIONS
6 of 6	FRAMING AND PANEL COMPONENTS

MANUFACTURER:
MAJOR INDUSTRIES
7120 STEWART AVENUE
WAUSAU, WI 54401
TEL: (715) 842-4616
FAX: (715) 843-5139
PRODUCT:
GUARDIAN 275®
TRANSLUCENT
HURRICANE WALL SYSTEMS
Engineering:
EngCo Inc.
CA 8116
5595 Orange Dr. 201
Davie, Fl. 33314
Tel.: (954) 585-0304
Fax: (954) 585-0305
ENGCO@AOL.COM
Engineer Seal
Pedro De Figueiredo
PE 52609
DRAFTING:
PK DRAFTING & MORE
Date: 12/15/11
Scale: NA
Design by: PPMF
Drawing Number
11-246
SHEET
1 of 6

TYPICAL CONFIGURATIONS

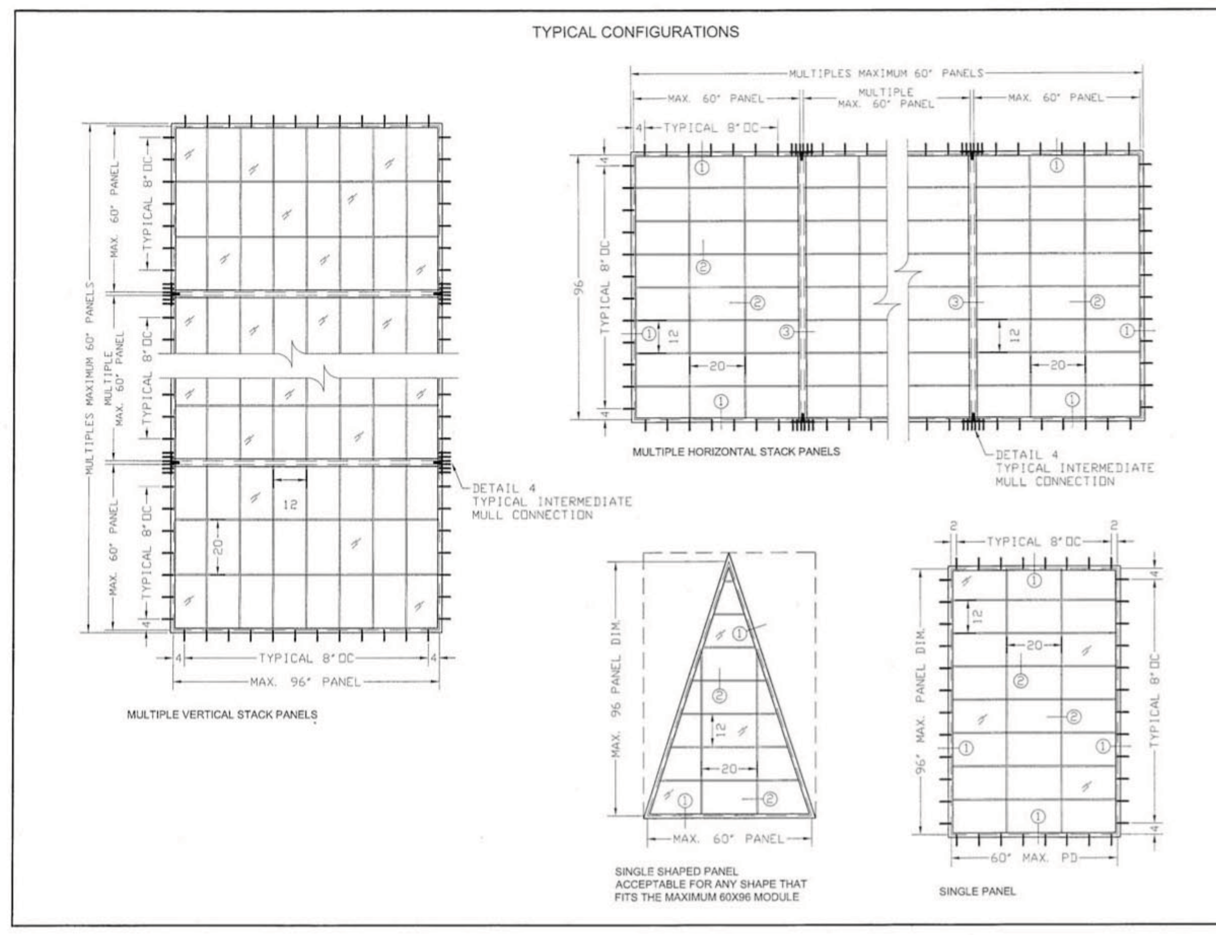

Drawing Number 11-246
SHEET
2 of 6

DETAILS

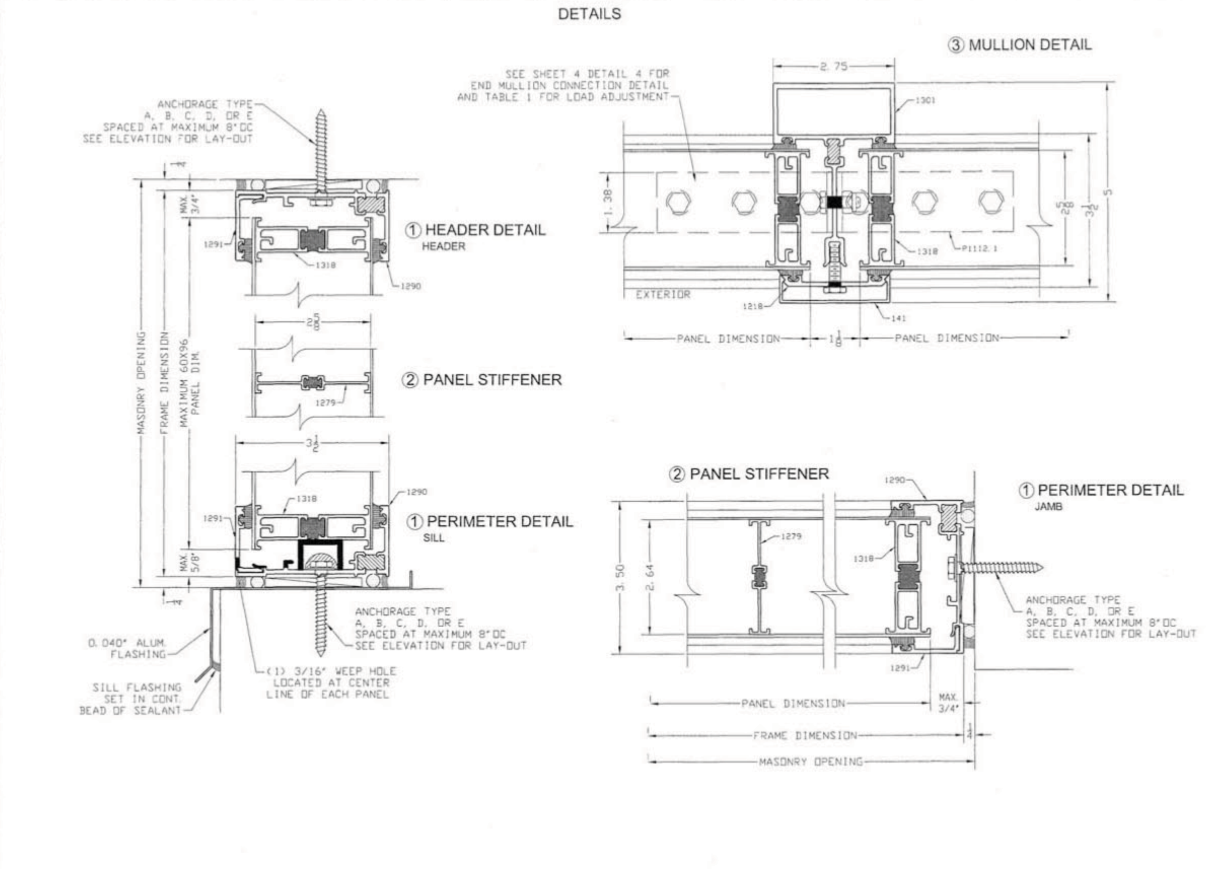

Drawing Number 11-246
SHEET
3 of 6

DETAILS

④ MULLION CONNECTION DETAIL

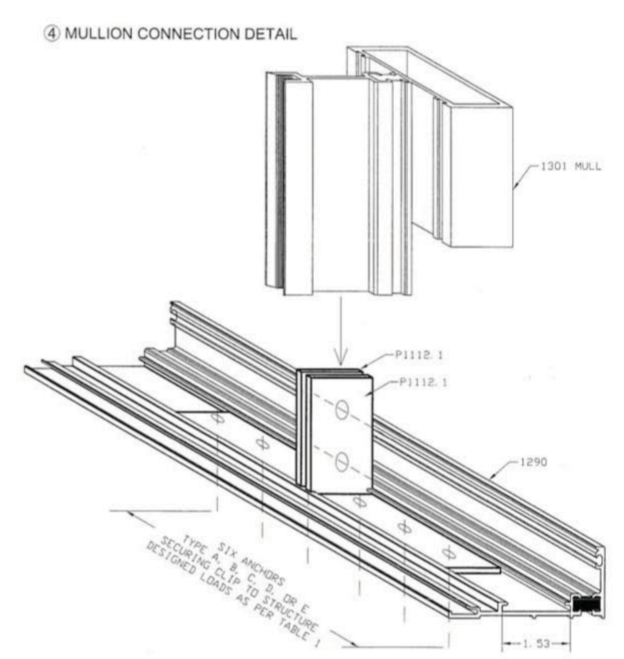

TABLE 1 - MULLION ADJUSTED PRESSURES (PSF) DUE TO ANCHORAGE TYPE

ANCHOR TYPE	PANEL MODULES 96			84			72			60			HEIGHT
	60	48	36	60	48	36	60	48	36	60	48	36	WIDTH
A	60	65	65	65	65	65	65	65	65	65	65	65	
B	35	40	49	43	48	58	55	60	65	65	65	65	
C	65	65	65	65	65	65	65	65	65	65	65	65	
D	65	65	65	65	65	65	65	65	65	65	65	65	
E	35	40	49	43	48	58	55	60	65	65	65	65	

SEE SHEET 5 FOR ANCHOR TYPE DEFINITION

EXAMPLE: MODULE 36X84 PANEL ANCHOR TYPE E MULLION DESIGNED PRESSURE TO BE ADJUSTED TO 58 PSF

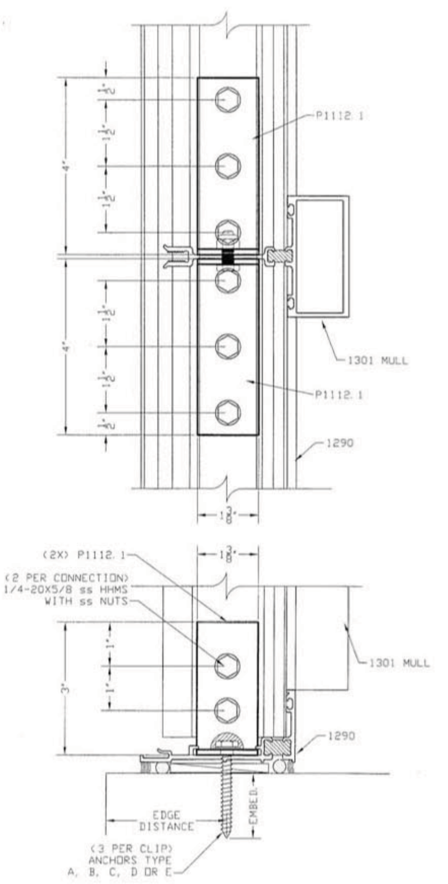

Drawing Number 11-246
SHEET
4 of 6

FRAMING ANCHORAGE

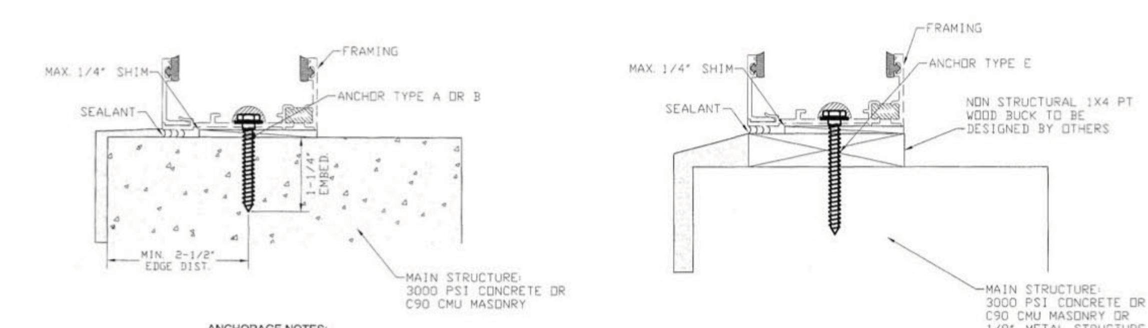

ANCHORAGE NOTES:

1- SILL, JAMB AND HEADER WITH TYPE A, B, C, D OR E ANCHORAGE OPTIONS.
2- SEE ELEVATIONS FOR WINDOW ANCHORAGE LAY-OUT AND SPACING.

ANCHOR OPTIONS:

A- 1/4" SS ITW TAPCON 1-1/4" DIRECTLY INTO 3000 PSI CONCRETE
B- 1/4" SS ITW TAPCON 1-1/4" DIRECTLY INTO MASONRY
C- 1/4" SS ITW TAPCON OR 1/4" ss SMS 1 1/2" DIRECTLY INTO MIN. 2X PT WOOD BUCK (G>=.046)
D- 1/4" SS SMS DIRECTLY INTO MIN. 1/8" METAL STRUCTURE (6063-T5 ALUM. OR ASTM A36 STEEL)
E- ALL ANCHORS ABOVE INSTALLED THROUGH 1X PT INTO MAIN STRUCTURE

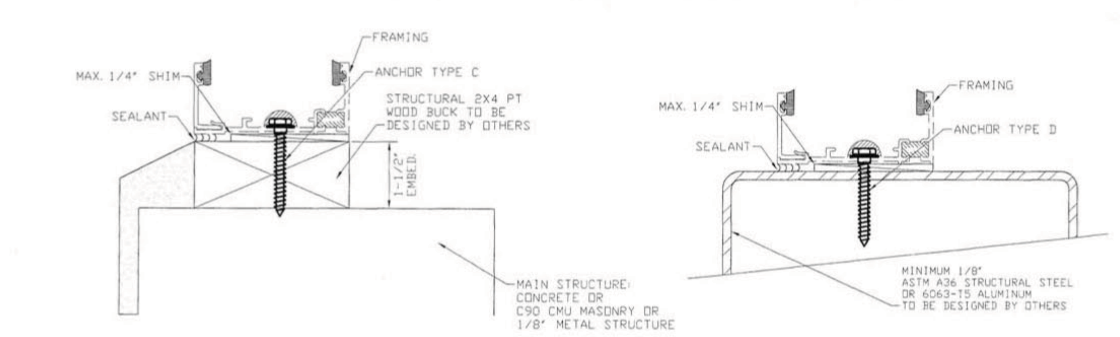

Drawing Number 11-246
SHEET
5 of 6

FRAMING COMPONENTS

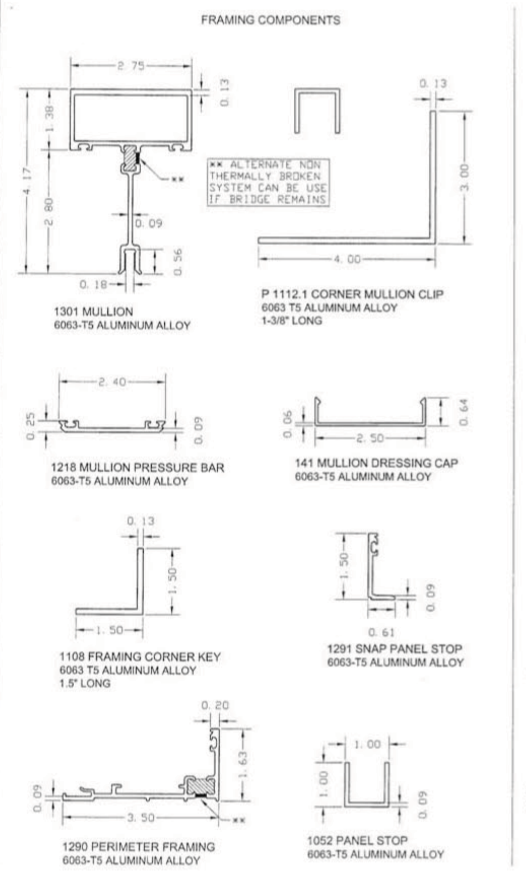

PANEL COMPONENTS

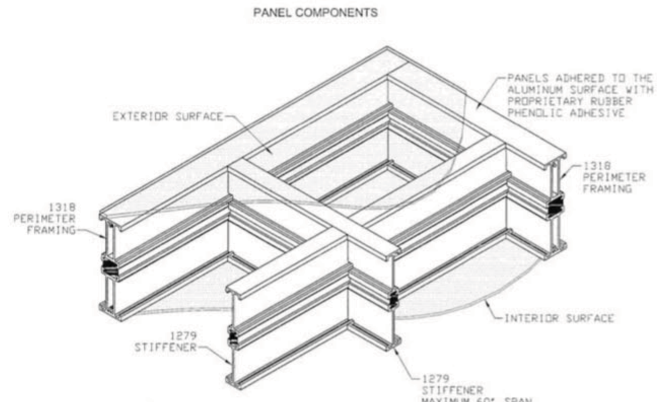

BASIC MODULAR PANEL ASSEMBLY

PANEL CONFIGURATION:
EXTERIOR SURFACE: 0.070" FIBERGLASS PANEL
INTERIOR SURFACE: 0.045" FIBERGLASS PANEL
NOMINAL GRID SIZE: 12" X 20"
MAXIMUM 1279 SPAN: 60"

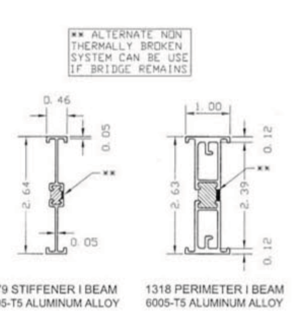

INTERIOR SURFACE PANEL	
0.045 FRCW STANDARD FIRE RATED TRANSLUCENT FIBERGLASS SHEET	
ASTM E84:	FLAME SPREAD INDEX - 20 SMOKE DEVELOPED INDEX - 150 (<=450 FBC 2606.4)
ASTM D1929:	SELF IGNITION - 912 °F (>=650 FBC 2606.4) FLASH IGNITION - 872 °F
ASTM D635:	CLASS CC1

EXTERIOR SURFACE	
0.070 STCWW ULTIMATE SERIES HIGH IMPACT TRANSLUCENT FIBERGLASS SHEET	
ASTM E84:	FLAME SPREAD INDEX - 170 SMOKE DEVELOPED INDEX - 350 (<=450 FBC 2606.4)
ASTM D1929:	SELF IGNITION - 860 °F (>=650 FBC 2606.4) FLASH IGNITION - 752 °F
ASTM D635:	BURNING RATE - 24.8 mm/min. (CLASS CC2)

Drawing Number 11-246
SHEET
6 of 6

hayes | cumming
architects
2210 central ave, suite 100
st. petersburg, fl 33712
ph 727.321.0900
fx 727.321.0903
AA26001260
hc-arc.com

ANDREW M. HAYES
AR0016166

andrew m. hayes, aia, leed bd+c

© Copyright - All Rights Reserved

members of
American Institute of Architects

CONSULTANT:

CLIENT / PROJECT NAME:
CITY OF KEY WEST
RENOVATION TO

FREDERICK DOUGLASS RECREATION CENTER

111 OLIVIA STREET
KEY WEST, FL 33040

BID SET

Original drawing is 24"x36". Scale accordingly if reduced.

SHEET TITLE:
FLORIDA PRODUCT APPROVAL

REVISIONS:

DATE ISSUED: 03/28/2016
PROJECT NO.: 12.0D01

DRAWING NUMBER:
A-801 SHEET: 46 OF 68

9/18/2015 3:00:58 PM

AL - FARODQ CORPORATION
CONSULTING ENGINEERS & PRODUCT DEVELOPMENT
1229 SW 87th Avenue - Miami, FL 33174

PRODUCT APPROVAL EVALUATION
RULE CHAPTER #9N-3.005 - METHOD 1 OPTION D

FL
Date: 12/16/2011

Detailed Product Description :
Manufacturer: YKK AP AMERICA, INC.
Manufacturer Address: 1229 HIGHWAY 441 BYPASS - DUBLIN, GA 31021
Model Name: SERIES "YHS 50 FS" ALUMINUM STOREFRONT SYSTEM
Maximum Panel Width: 72"
Maximum Panel Height: 144"
Maximum Load: +90.0, -90.0 PSF (Large Missile Impact)
Installation Drawings #W11-52

This product complies with the High Velocity Hurricane Zone (HVHZ) testing requirements.

The above maximum parameters do not occur simultaneously.
See charts on drawings for combinations of span vs. loads and anchor type.

Mandatory Tests (Tested in accordance with AAMA 101/I.S.2/NAFS-02/TAS-202)

TEST	DESCRIPTION	TEST LOCATION	TEST REPORT DATE	TEST REPORT #
ASTM E283	Air Infiltration Leakage	Nat'l Certified Testing Laboratories American Test Lab of S. FL Hurricane Test Laboratory	04/02/2001 01/19/2007 11/15/2011 05/07/2009	NCTL-210-2627-6 ATL5F-1206.01-06 ATL-B5925.02-550-18 HTL-0231-1007-08
ASTM E331 OR ASTM 547 & TAS 202	Water Penetration	Nat'l Certified Testing Laboratories American Test Lab of S. FL Hurricane Test Laboratory	04/02/2001 01/19/2007 11/15/2011 05/07/2009	NCTL-210-2627-6 ATL5F-1206.01-06 ATL-B5925.02-550-18 HTL-0231-1007-08
ASTM E330 & TAS 202	Uniform Static Air Press.	Nat'l Certified Testing Laboratories American Test Lab of S. FL Hurricane Test Laboratory	03/23/2001 04/02/2001 11/15/2011 05/07/2009 07/24/2004 07/24/2004	NCTL-210-2627-4 NCTL-210-2627-6 ATL5F-1206.01-06 ATL-B5925.02-550-18 HTL-0231-1007-08 HTL-0147-0202-04 HTL-0147-0732-04

Comparative analysis used __X_Yes ___No

Supplemental Tests

TEST	DESCRIPTION	TEST LOCATION	TEST REPORT DATE	TEST REPORT #
FBC 1626.2 (TAS201&203)	Large Missile Impact & Cyclic	Nat'l Certified Testing Laboratories	11/11/1999 03/23/2001	NCTL-210-2245-4 NCTL-210-2627-4
ASTM E1886 / 1996		American Test Lab of S. FL	04/02/2001 01/19/2007 11/15/2011	NCTL-210-2627-6 ATL5F-1206.01-06 ATL-B5925.02-550-18
		Hurricane Test Laboratory	05/07/2009 07/24/2004 07/24/2004	HTL-0231-1007-08 HTL-0147-0202-04 HTL-0147-0732-04

Under the limitations of the attached installation drawings, to the best of my knowledge and ability, the above window/door product conforms to the requirements of the 2010 Florida Building Code.

Evaluation Report Engineer:
Javad Ahmad PE # 70592
Al-Farooq Corporation EB # 5538

DEC 16 2011

SCW:My Documents\Solutions\FL Evaluation\YKK\2010\FBC\Elsewhere\HVHZ 50 FS Elsewhere.mcd

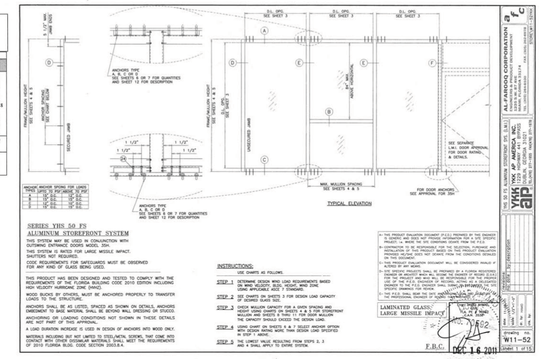

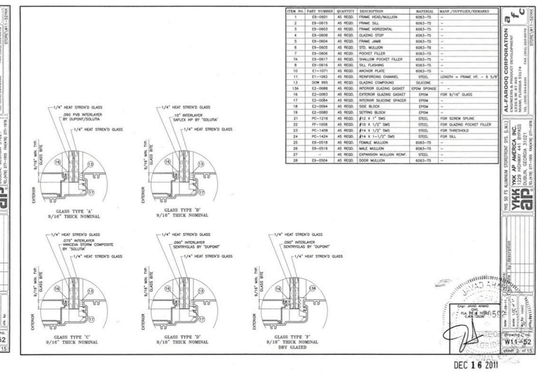

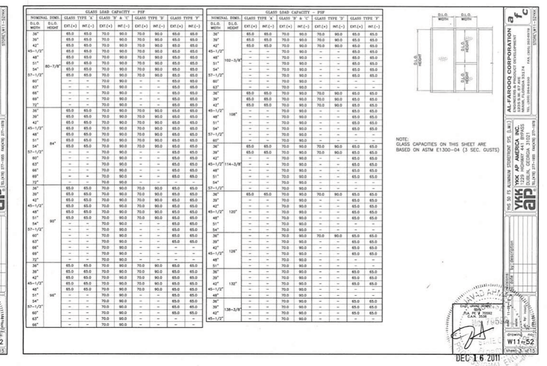

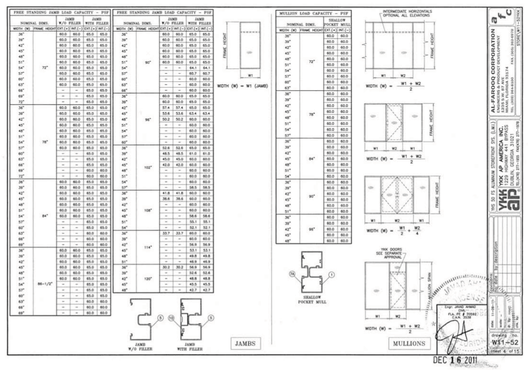

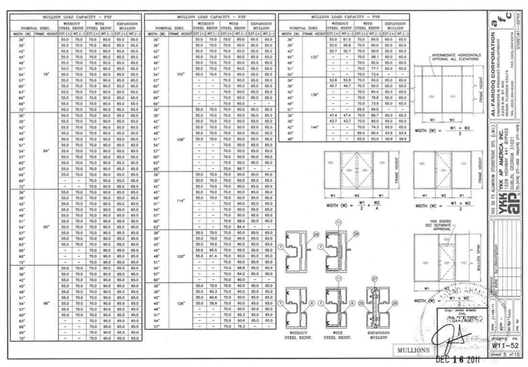

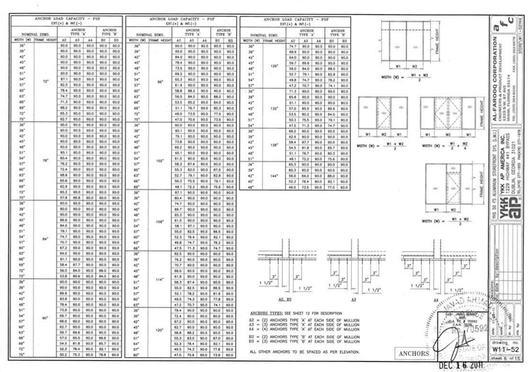

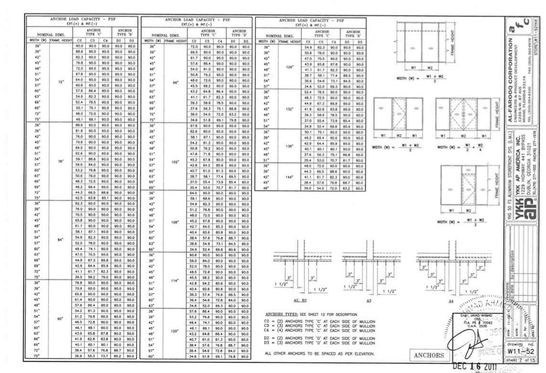

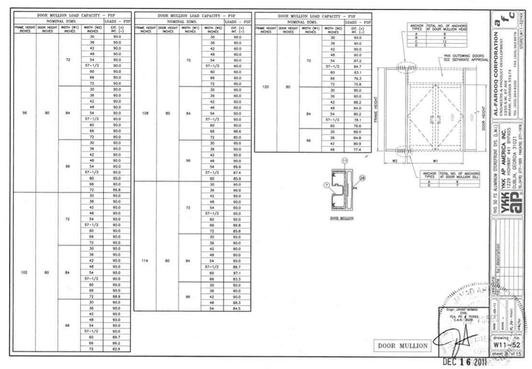

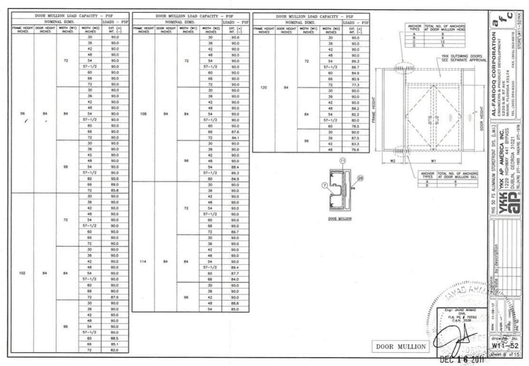

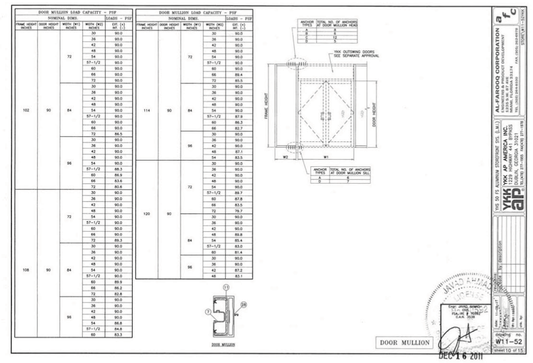

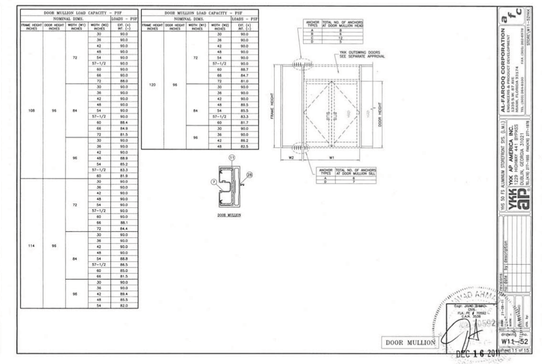

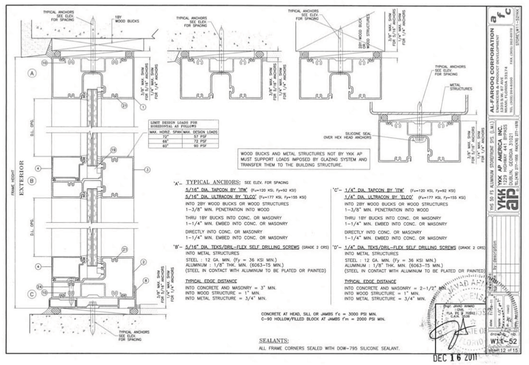

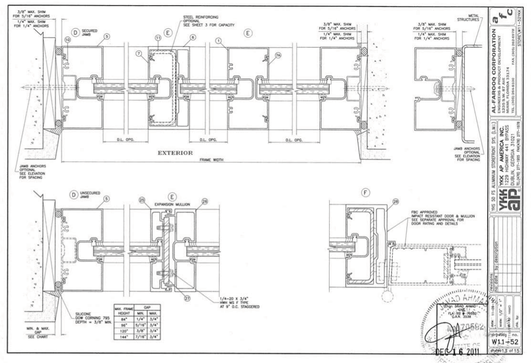

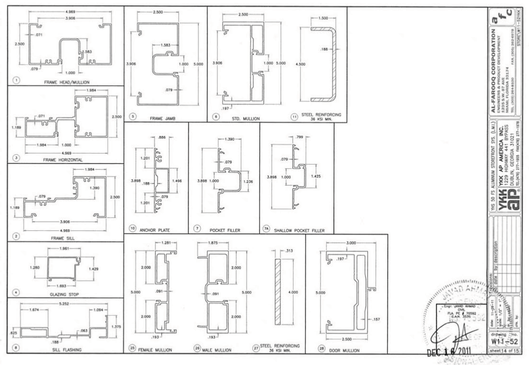

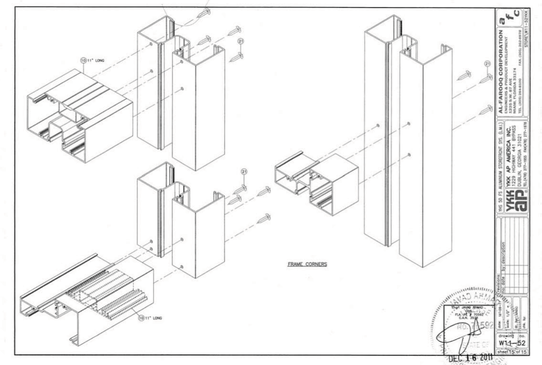

9/18/2015 3:02:09 PM

hayes | cumming
architects

2210 central ave, suite 100
st. petersburg, fl 33712
ph 727.321.0900
fx 727.321.0903

AA26001260
hc-arc.com

andrew m. hayes, aia, leed bd+c

© Copyright - All Rights Reserved

ANDREW M. HAYES
AR001616

members of
AIA
American Institute of Architects

CONSULTANT:

CLIENT / PROJECT NAME:
CITY OF KEY WEST

RENOVATION TO

FREDERICK DOUGLASS RECREATION CENTER

111 OLIVIA STREET
KEY WEST, FL 33040

BID SET

Original drawing is 24"x36". Scale accordingly if reduced.

SHEET TITLE:
FLORIDA PRODUCT APPROVAL

REVISIONS:

DATE ISSUED: 03/28/2016
PROJECT NO.: 12.0D01

DRAWING NUMBER:
A-802 SHEET: 47 OF 68

MIAMI-DADE COUNTY
BUILDING CODE COMPLIANCE OFFICE (BCCO)
PRODUCT CONTROL DIVISION

MIAMI-DADE COUNTY, FLORIDA
METRO-DADE FLAGLER BUILDING
140 WEST FLAGLER STREET, SUITE 1603
MIAMI, FLORIDA 33130-1563
(305) 375-2901 FAX (305) 375-2908
www.miamidade.gov/buildingcode

NOTICE OF ACCEPTANCE (NOA)

Ingersoll-Rand
6810 Hillsdale Court
Indianapolis, IN 46250

SCOPE:
This NOA is being issued under the applicable rules and regulations governing the use of construction materials. The documentation submitted has been reviewed by Miami-Dade County Product Control Division and accepted by the Board of Rules and Appeals (BORA) to be used in Miami Dade County and other areas where allowed by the Authority Having Jurisdiction (AHJ).

This NOA shall not be valid after the expiration date stated below. The Miami-Dade County Product Control Division (In Miami Dade County) and/or the AHJ (in areas other than Miami Dade County) reserve the right to have this product or material tested for quality assurance purposes. If this product or material fails to perform in the accepted manner, the manufacturer will incur the expense of such testing and the AHJ may immediately revoke, modify, or suspend the use of such product or material within their jurisdiction. BORA reserves the right to revoke this acceptance, if it is determined by Miami-Dade County Product Control Division that this product or material fails to meet the requirements of the applicable building code.

This product is approved as described herein, and has been designed to comply with the Florida Building Code, including the High Velocity Hurricane Zone.

DESCRIPTION: IR Series Double Flush Outswing Commercial Steel Doors w / wo Panic Exit Devices

APPROVAL DOCUMENT: Drawing No "**IRF-D07**", titled "Flush Outswing Double Doors", sheets 1 through 11 of 11, prepared by the manufacturer, dated 05-27-07 and last revised on 04/14/10, signed and sealed by Thomas Gordon, P.E., bearing the Miami-Dade County Product Control renewal stamp with the Notice of Acceptance number and expiration date by the Miami-Dade County Product Control Division.

MISSILE IMPACT RATING: Large and Small Missile Impact Resistant

Limitations:
1. See Design Pressures, Sizes, Hardware and Water infiltration limitation sheets 1& 2 of the drawings.
2. Expanded foam core options (F) in sheet 4 is limited to EPS by Falcon Corp and Polyisocyanurate –H200 (polyurethane) by Elliott Co.
3. Electrical/Electronic function is not part of this approval, such functions to be reviewed and approved by AHJ.

LABELING: Each unit shall bear a permanent label with the manufacturer's name or logo, city, state and following statement: "Miami-Dade County Product Control Approved", unless otherwise noted herein.

RENEWAL of this NOA shall be considered after a renewal application has been filed and there has been no change in the applicable building code negatively affecting the performance of this product.

TERMINATION of this NOA will occur after the expiration date or if there has been a revision or change in the materials, use, and/or manufacture of the product or process. Misuse of this NOA as an endorsement of any product, for sales, advertising or any other purposes shall automatically terminate this NOA. Failure to comply with any section of this NOA shall be cause for termination and removal of NOA.

ADVERTISEMENT: The NOA number preceded by the words Miami-Dade County, Florida, and followed by the expiration date may be displayed in advertising literature. If any portion of the NOA is displayed, then it shall be done in its entirety.

INSPECTION: A copy of this entire NOA shall be provided to the user by the manufacturer or its distributors and shall be available for inspection at the job site at the request of the Building Official.

This NOA **revises & renews** NOA **# 07-0829.03** consists of this page 1 and evidence pages E1, E-2, as well as approval document mentioned above.

The submitted documentation was reviewed by **Ishaq I. Chanda, P.E.**

MIAMI-DADE COUNTY APPROVED

NOA No 10-0209.06
Expiration Date: May 05, 2015
Approval Date: May 12, 2010
Page 1

Ingersoll-Rand

NOTICE OF ACCEPTANCE: EVIDENCE SUBMITTED

A. DRAWINGS (transferred from file **# 07-0829.03**)
1. Manufacturer's parts and sections drawings.
2. Drawing No "**IRF-D07**", titled "Flush Outswing Double Doors", sheets 1 through 11 of 11, prepared by the manufacturer, dated 05-27-07 and last revised on 04/14/10, signed and sealed by Thomas Gordon, P.E.

B. TESTS
1. Test report on
   1) Uniform Static Air Pressure Test, Loading per TAS 202-94
   2) Large Missile Impact Test per FBC, TAS 201-94
   3) Cyclic Wind Pressure Loading per FBC, TAS 203-94
   4) Forced Entry Test, per PA 202-94

Along with manufacturer's parts and section drawings of double flush outswing steel doors, marked by National Certified Testing Lab, Test Reports No. **NCTL-210- 3580-2,** dated March 25, 2009, signed and sealed by Gerry Ferrara, P. E.

2. Test report (transferred from file **# 07-0829.03**)
   1) Air Infiltration Test, per TAS 202-94
   2) Uniform Static Air Pressure Test, Loading per TAS 202-94
   3) Large Missile Impact Test per FBC, TAS 201-94
   4) Cyclic Wind Pressure Loading per FBC, TAS 203-94
   5) Forced Entry Test, per PA 202-94

Along with manufacturer's parts and section drawings of double flush outswing steel doors, marked by Certified Testing Lab, Test Reports No(s). **CTLA-776W** dated February 20, 2002, **CTLA-776W1** dated April 25, 2002, **CTLA-776W-2, 3** dated April 20, 2002, **CTLA-1035W-2** dated Feb. 11, 2003, **CTLA-1086-W** dated Nov. 17, 2003, all signed and sealed by Ramesh Patel, P.E.

3. Test report (transferred from file **# 07-0829.03**)
   1) Air Infiltration Test, per TAS 202-94
   2) Uniform Static Air Pressure Test, Loading per TAS 202-94
   3) Large Missile Impact Test per FBC, TAS 201-94
   4) Cyclic Wind Pressure Loading per FBC, TAS 203-94
   5) Forced Entry Test, per TAS 202-94

Along with manufacturer's parts and section drawings of Flush outswing double steel doors, marked by Certified Testing Lab, Test Reports No(s). **NCTL-210-3357-1** dated Dec 28, 2006, signed and sealed by Gerard J. Ferrara, P.E.

4. Additional test reports
   1) Uniform Static Air Pressure Test, Loading per FBC TAS 202-94.
   2) Water Resistance Test per FBC TAS 202-94

Along with marked-up drawings and installation diagram of double steel commercial doors, prepared by National Certified Testing Laboratories Inc., Test Report No. **NCTL-210-03-0514-11,** dated August 31, 2004, **NCTL- 210-3044-1,** dated August 31, 2004, **NCTL- 210-3549-1,** dated August 26, 2008 and **NCTL- 210-3511-1** dated 04/09/08, all signed and sealed by Gerard J. Ferrara, P. E.

Note: Test report No(s): NCTL210-3549-1 and NCTL-210-3511-1 have been revised by an addendum letter, issued by Lab, dated Feb. 04, 2009, signed & sealed by Gerard J. Ferrara, P. E.

Ishaq I Chanda, P.E.
Product Control Examiner
NOA No 10-0209.06
Expiration Date: May 05, 2015
Approval Date: May 12, 2010

E - 1

Ingersoll-Rand

NOTICE OF ACCEPTANCE: EVIDENCE SUBMITTED

C. CALCULATIONS: (transferred from file **# 07-0829.03**)
1. Anchor verification, dated 12/18/2007 and last revised on 06/18/2008, prepared, signed & sealed by Thomas Gordon., P.E.
2. Evaluation report for Hinges dated 09/01/04, prepared, signed & sealed by Thomas Gordon., P.E.

D. QUALITY ASSURANCE BY;
1. Miami-Dade County Building Code Compliance Office (BCCO).

E. MATERIAL CERTIFICATIONS (Photo copies from files # listed below)
1. Test Report No. **03NK2370/R145081**, January 21, 2003, issued by Underwriters laboratories Inc for "Surface Burning Characteristics of Building material" per ASTME84-00a and self Ignition per ASTM1929D for "Elfoam H200", issued to Elliott Co. of Indianapolis Inc.
2. Tensile test report # CTLA-776W (0194H), dtd 02/25/02 prepared by CTL Architectural Division, sheet samples, tested per ASTM E8, signed & sealed by Ramesh Patel, P.E.
3. Tensile Test report No. A103W1-Test 1, 2 & 3 dated 23 APR 03 per ASTME-8 for steel face sheet, prepared by Certified Testing laboratory, signed and sealed by Ramesh Patel, P.E.
4. Test Report No. **NER-384**, reissued dated May 01, 1994, issued by National Evaluation Service Inc to Huntsman Chemical Corporation for "Expanded Polystyrene EPS" for grade 86 & grade 54 for "Surface Burning Characteristics of Building material" per ASTME 84.
5. Test Report No. **9691**, dated August 28, 1987, 1994, issued by United Testing Company Inc. to Huntsman Chemical Corporation for "Expanded Polystyrene EPS" for grade 86 & 54 for "Self Ignition Temperature Test" per ASTMD-1929.
6. Test Report No. **R16529**, July 29, 2005, issued by Underwriters laboratories Inc for foamed plastic for "Surface Burning Characteristics of Building material" per ASTME84 and self Ignition per ASTM1929D for "BRYX-R16529", issued to Falcon Foam, Division of Atlas Roofing Corp.

F. STATEMENTS
1. Letter of conformance to FBC 2007 & "No financial interest" dated Feb. 03, 2010, signed and sealed by Gordon Thomas, P.E.
2. Laboratory Statement of compliance, part of the above referenced test reports
3. Letter of certification dated 04/20/10, issued by Ingersoll-Rand for electronic CO lock series mechanical /functional parts same as AD, ND and AD-M series.
4. Letter of commitment dated 04/21/10 issued by Ingersoll-Rand for additional tests for butt & continuous Hinges in near future, signed by Yuri Farber.

G. OTHER
1. This NOA **revises & renews** NOA **# 07-0829.03,** expiring May 05, 2015.
2. Previously consolidates NOA #(s) associated with this files are 07-0829.03, 02-0712.01, 02-0712.03, 03-0908.03 and 04-0203.03, latest expiring May 05, 2010.
3. Consolidation Test proposal **# 06-2468**, dated 04/27/07 approved by BCCO.
4. IR Locks & Panic devices brochures / catalogs supplied by manufacturer.

Ishaq I Chanda, P.E.
Product Control Examiner
NOA No 10-0209.06
Expiration Date: May 05, 2015
Approval Date: May 12, 2010

E - 2

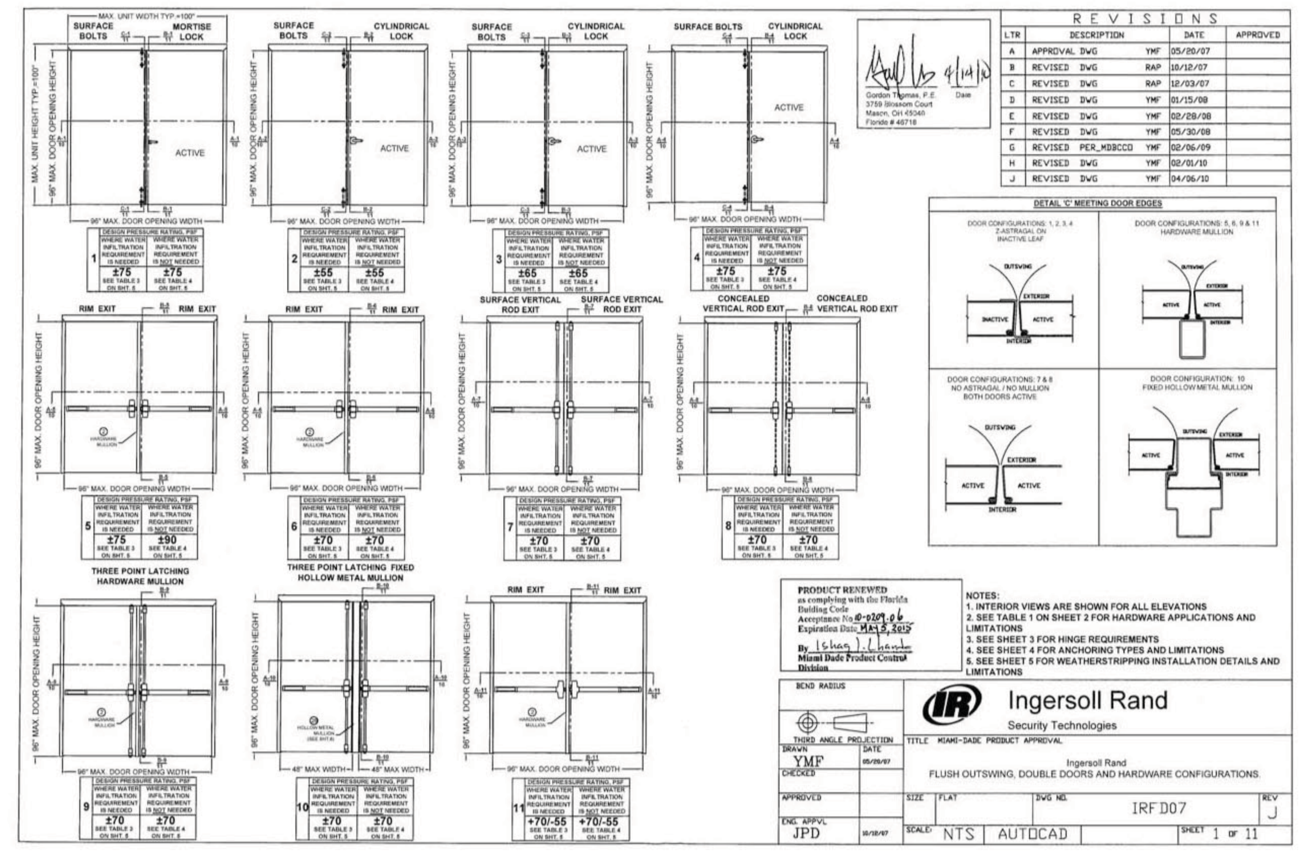

TABLE 1.

Door Configuration	Maximum Design Pressure, PSF: Positive	Negative	Maximum Door Opening Size, in.: Width	Height	Hardware Family	Model/Series	Strike Models	IR Brand	Comments
1	75	75	96	96	Mortise Lock	L/LV9400/AD MS	10-072	Schlage	Function with deadbolt, 3/4" min. throw latch & 1" min throw deadbolt
						M	ANSI	Falcon	
						5500	ANSI	Locknetics/Schlage	w/autobolt, 3/4" min. throw
2	55	55	96	96	Cylindrical Lock	AL	10-025	Schlage	1/2" throw latch
3	65	65	96	96	Cylindrical Lock	D/ND/AD CYL	10-025	Schlage	1/2" throw latch
4	75	75	96	96	Cylindrical Lock	D/ND/AD CYL	10-025	Schlage	3/4" throw latch
						T	ANSI	Falcon	3/4" throw latch
						5100	ANSI	Locknetics/Schlage	3/4" throw latch
5	90 SEE NOTE 4.	90 SEE NOTE 4.	96	96	Rim Exit Device	XP 98/99(F)	909/954	Von Duprin	for pairs use (KR)9954 mullion by Von Duprin
6	70	70	96	96	Rim Exit Device	98/99(F)	299F/499F	Von Duprin	for pairs use (KR)9954 mullion by Von Duprin
						88-F	268	Von Duprin	
						(F)DL-18-R	F570	Monarch	
7	70	70	96	96	Surface Vertical Rod Exit Device	98/9927(F)	299F/499F Top, 304L/248L4 Bottom	Von Duprin	
						(F)18-V	3788 Top, 2130 Bottom	Monarch	
						(F)25-V	3788 Top, 2130 Bottom	Falcon	
8	70	70	96	96	Concealed Vertical Rod Exit Device	98/9947-F	338 Top, 385A Bottom	Von Duprin	
						F-18-C	4188 Top, 2130 Bottom	Monarch	
						F-25-C	4188 Top, 2130 Bottom	Falcon	
9	70	70	96	96	Three-Point Latching Device	98/9957(F)	299F/499F Top/Middle, 304L/248L4 Bottom	Von Duprin	for pairs use (KR)9954 mullion by Von Duprin
10	70	70	48	96		98/9957(F)	299F/499F Top/Middle, 304L/248L4 Bottom	Von Duprin	See note #2
11	70	55	96	96	Rim Exit Device	(F)25-R	299F/499F	Falcon	for pairs use (KR)9954 mullion by Von Duprin

NOTES:
1. FOR DOOR CONFIGURATIONS 1, 2, 3, & 4, INACTIVE LEAF REQUIRES IVES SB360 SURFACE BOLTS IN TOP AND BOTTOM
2. DOOR CONFIGURATION 10 IS USING FIXED HOLLOW METAL MULLION BETWEEN TWO DOORS
3. SEE SHEETS 6, 7 & 8 FOR LOCKING HARDWARE AND HARDWARE MULLION DETAILS
4. DOOR CONFIGURATION 5 IS RATED FOR MAXIMUM DESIGN PRESSURE ±90 PSF WHEN WATER INFILTRATION REQUIREMENT IS NOT NEEDED, WHEN WATER INFILTRATION REQUIREMENT IS NEEDED, IT IS RATED UP TO +75 PSF WHEN USED WITH SEALS BY ZERO INTERNATIONAL AND NATIONAL GUARD PRODUCTS (NGP) (SEE TABLE 3 ON SHT.5)
5. SCHLAGE AL-SERIES CYLINDRICAL LOCK (door configuration 2) IS LIMITED TO ±55 PSF MAXIMUM DESIGN PRESSURE

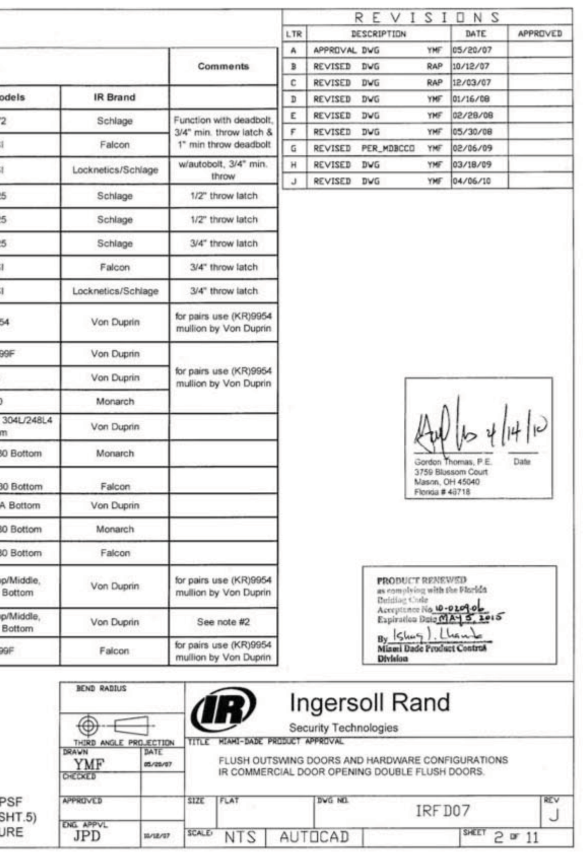

TABLE 2

	QUANTITY	DESCRIPTION	MATERIAL	SIZE
1	1	HEAD SEE SHT 6 ASTM A366	.053" MIN. STL	MAX. 100"
2	1	VON DUPRIN (KR) 9954 HDWE MULLION USED W/RIM HDWE	.123" A500 STL	MAX. 96" HEIGHT.
3	2	HINGE JAMB SEE SHT 6 ASTM A366	.053" MIN. STL	MAX. 100" HEIGHT.
4	2	LOCK SIDE REINFORCEMENT CHANNEL	.093" MIN. STL	3.5 X 93.44 MAX
5	2	HINGE SIDE PANIC REINFORCEMENT	.067" MIN. STL	MAX. 20"
6	NOTE 3.	HINGE REINFORCEMENT DOOR ASTM A621	.167" MIN. STL.	1.28" X 9.19"
7	NOTE 3	HINGE REINFORCEMENT FRAME ASTM A621	.167" MIN. STL.	1.3" X 9.187" MAX.
8	NOTE 3.	4.5" X 4.5" BUTT HINGES (SEE SHT.3)	.134 MIN.	(8) #12-24 MS PER HINGE
9	2	OPTIONAL, CONTINUOUS HINGE (SEE SHT.3) CORE MATERIAL (SHT 4) A) HONEYCOMB B) STEEL STIFFENED C/F) POLYSTYRENE D/F) POLYURETHANE/POLYISOCYANURATE E) MINERAL BOARD TEMPERATURE RISE CORE	.067" MIN. STL/12 ALUM	MAX. 95"
10	2	LOCKING HARDWARE - SEE SHEETS 2, 7 & 8		
11	1	THRESHOLD SILL W/BUMPER GASKET (SEE TAB. 3&4 ON SHT.5) 1) ZERO 566A 2) NAT'L GUARD 950A	.100" ALUM. 6063 T5	5.50"X0.5"X96"MAX.
12	NOTE 2	JAMB ANCHOR ASTM A924	SEE SHEET 6	
13	NOTE 14.	PS074 WEATHER STRIPPING	TPE	MAX. 24"
14	2	FAS-SEAL DOOR SWEEP	TPE	MAX. 47.66"
15	4	END CHANNEL ASTM A924 (14 GA - INVERTED)		.69" X 1.66" X 47.66" MAX.
16	1	SPLIT ASTRAGAL SET OR Z-ASTRAGAL (NOT REQ'D WITH HOLLOW METAL MULLION)	SEE SHEET 5	
17	AS NEEDED	BUTYL RUBBER OR 100% SILICONE		
18	2	DOOR SCAB (16 OR 14 GA)	SEE SHEET 6	4" X 8" MAX.
19	1	BY ZERO INT'L DOOR SEAL No.8144FS / BY NGP DOOR SEAL No.5020	TPE	MAX. 24"
20	2 NOTE 14.	BY ZERO INT'L DOOR SWEEP No.539 / BY NGP DOOR SWEEP No.202N	TPE	MAX. 96"
21	2	BY ZERO INT'L DOOR SWEEP No.139 / BY NGP OMIT	SEE SHEET 5	MAX. 48"
22	2	BY ZERO INT'L ADJUSTABLE STOP No.475 / BY NGP ADJUSTABLE STOP No.170N	TPE	MAX. 48"
23	2	BY ZERO INT'L RAIN DRIP No.11 / BY NGP DRIP CAP No.16A	SEE SHEET 5	MAX. 48"
24	2	TOP CAP GALV. A60 ASTM A924	.020" MIN. STL.	0.5" X 1.76" X 48" MAX.
25	2	IVES 360 12" SURFACE BOLT		
26	1	ASA STRIKE		
27	1	Z-ASTRAGAL	.067" MIN. STL	MAX. 95.5
28	1	HOLLOW METAL MULLION (SINGLE OR DOUBLE RABBET)	SEE SHEET 6	MAX. 96"

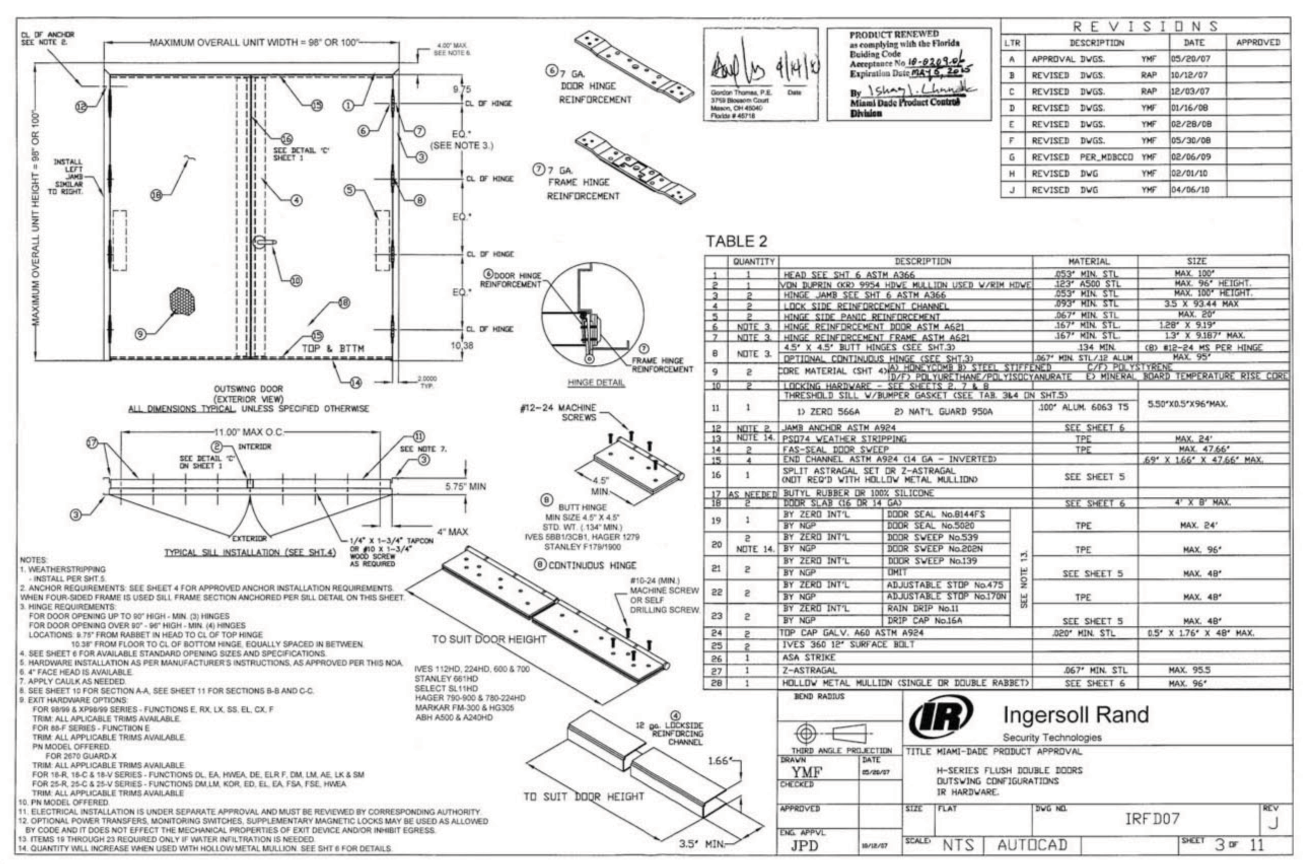

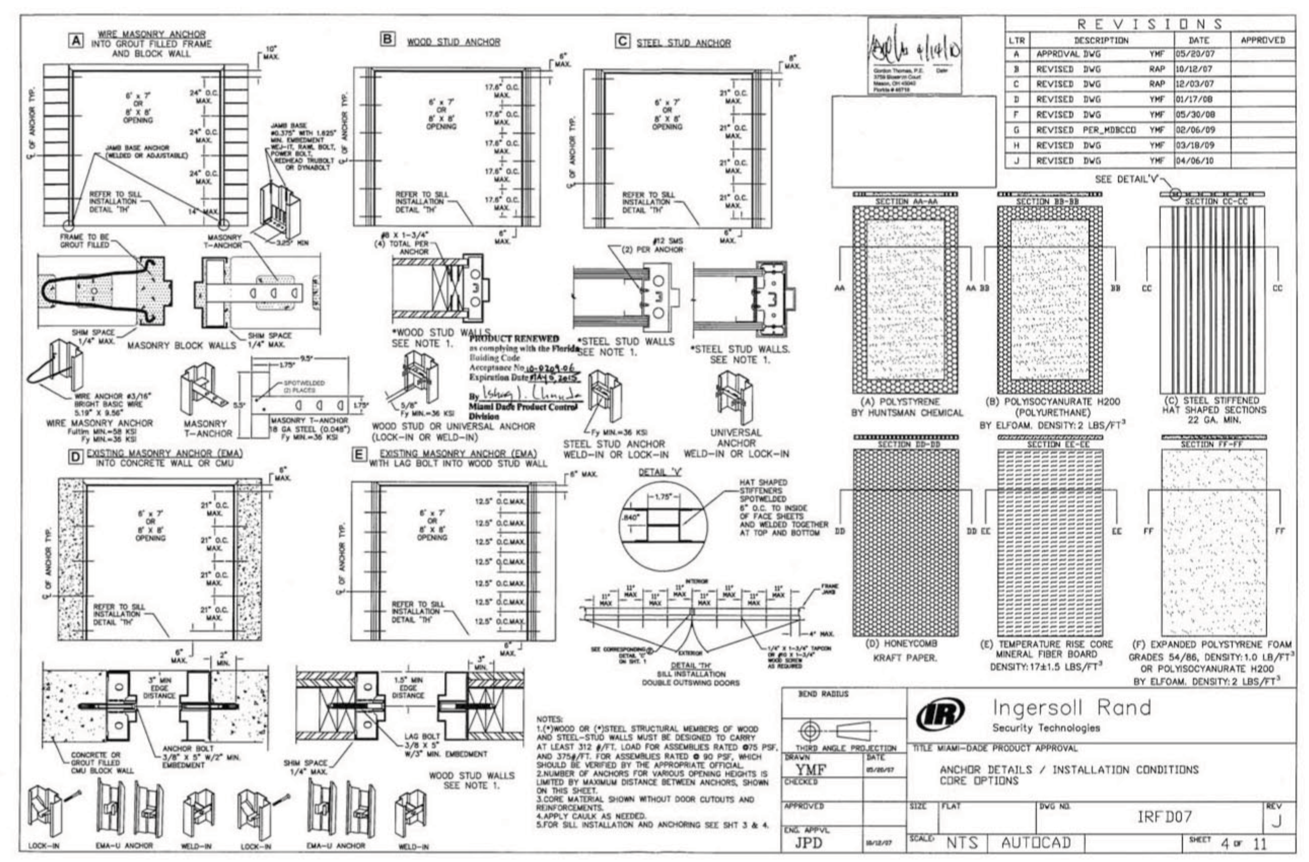

TABLE 3.
PERIMETER SEAL HARDWARE WHEN WATER INFILTRATION REQUIREMENT DOES APPLY

ITEM NUMBER SHT 3. TABLE 2	DESCRIPTION	MAX. ALLOWABLE DESIGN PRESSURE, PSF (UP TO) (SEE SHT.1)	MODEL No./ MANUFACTURER	PART DETAIL	INSTALLATION DETAIL
11	THRESHOLD	+75	566/ZERO INT'L	'T1'	'P1'
			950/NGP	'T2'	'P2'
14	FAS-SEAL SWEEP	+75	STEELCRAFT	'S'	'P1' & 'P2'
16	SPLIT ASTRAGAL	+75	328/ZERO INT'L	'GG1'	'N3'
			137/NGP	'GG2'	
19 OR 13	SELF ADHESIVE DOOR SEAL	+75	8144F/ZERO INT'L	'U'	'M' & 'N'
			PS074/STEELCRAFT	'Q'	
20	DOOR SWEEP	+75	539/ZERO INT'L	'W1'	'N'
			202N/NGP	'W2'	
21	DOOR SWEEP	+75	139/ZERO INT'L	'X'	'P1'
22	ADJUSTABLE STOP	+75	475/ZERO INT'L	'Y1'	'M'
			170N/NGP	'Y2'	
23	RAIN DRIP CAP	+75	11/ZERO INT'L	'Z1'	'P1'
			16A/NGP	'Z2'	'P2'
24	DOOR TOP CAP	+75	STEELCRAFT	'R'	'M'

TABLE 4.
PERIMETER SEAL HARDWARE WHEN WATER INFILTRATION REQUIREMENT DOES NOT APPLY

ITEM NUMBER SHT. 3. TABLE 2	DESCRIPTION	MODEL No. MANUFACTURER	PART DETAIL	INSTALLATION DETAIL
11	THRESHOLD	566 BY ZERO INT'L	'T1'	'K'
		950 BY NATIONAL GUARD	'T2'	
14	FAS-SEAL DOOR SWEEP	STEELCRAFT	'S'	'K'
16	SPLIT ASTRAGAL	328 BY ZERO	'GG1'	'N3'
		137 BY NGP	'GG2'	
13	PS-074 SELF ADHESIVE WEATHERSTRIPPING	STEELCRAFT	'Q'	'J' & 'L'
–	–	–	–	–
–	–	–	–	–
–	–	–	–	–
–	–	–	–	–
24	DOOR TOP CAP	STEELCRAFT	'R'	OPTIONAL

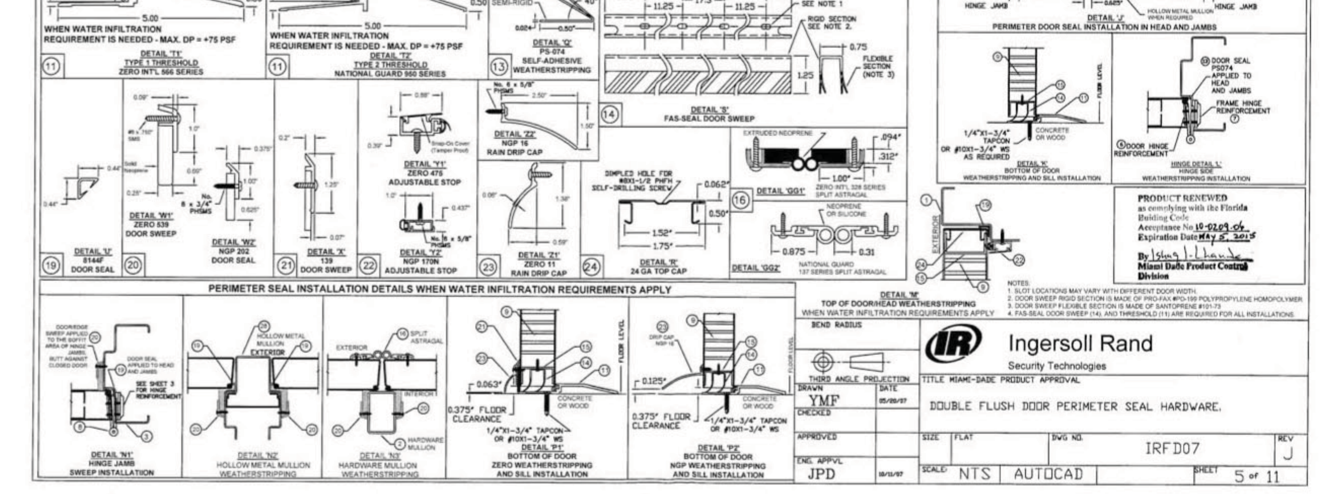

TABLE 7. STEEL MECHANICAL PROPERTIES

MATERIAL	ASTM REF.	YIELD KSI	TENSILE KSI
CRS	A1008	MIN. 30.1	MIN. 44.7
HRS	A1011		
GALV: A60	A924	MIN. 31.2	MIN. 73.2
SS: 304,306	A240		

TABLE 6. AVAILABLE FRAME CONFIGURATIONS

FRAME SERIES	JAMB DEPTH	MAX. OPENING SIZE WIDTH	HEIGHT	MATERIAL DESCR.	GA./MIN. THK
F	5.75" MIN.	8'0"	8'0"	CRS/HRS GALV	16/.053" 14/.067" 12/.099"
				STAINLESS STEEL	16/.053"
MU	5.75" MIN.	8'0"	8'0"	CRS/HRS GALV	16/.053" 14/.067"

TABLE 5. AVAILABLE DOOR CONFIGURATIONS

CORE MATERIAL PER SHT.4	MAXIMUM OPENING SIZE WIDTH / HEIGHT	SKIN MATERIAL DESCR.	GA./MIN. THK
HONEYCOMB POLYSTYRENE POLYURETHANE (POLYISOCYANURATE) TEMPERATURE RISE STEEL STIFFENED	VARIES SEE SHEET 2 TABLE 1	CRS GALV	16/.053" 14/.067"
HONEYCOMB POLYSTYRENE POLYURETHANE	VARIES SEE SHEET 2 TABLE 1	STAINLESS STEEL	16/.053"

NOTES:
1. DOOR CONSTRUCTION
1.1. MINIMUM DOOR THICKNESS – 1 3/4"
1.2. DOOR SIZE MAY VARY, SUBJECTED TO COMPLIANCE WITH FLORIDA BUILDING CODE AND PRODUCT AVAILABILITY FROM MANUFACTURER (SEE SHEET 2 FOR AVAILABLE HARDWARE)
1.3. PEEP-HOLES AND DOOR VIEWERS ARE ALLOWED
2. FRAME CONSTRUCTION
1.1. MINIMUM JAMB DEPTH – 5 3/4", STOP HEIGHT – 5/8"
2.2. FRAMES AVAILABLE AS FLUSH (F-SERIES) AND MULT-USE (MU-SERIES) (SEE TABLE 6)
3. FOR MATERIAL SPECIFICATIONS REFERENCE SEE TABLE 7.
4. HOLLOW METAL MULLION (ITEM 28 PER TAB.2, SHT.3) TO BE USED WITH 3-POINT LATCH IN DOOR CONFIGURATION #10

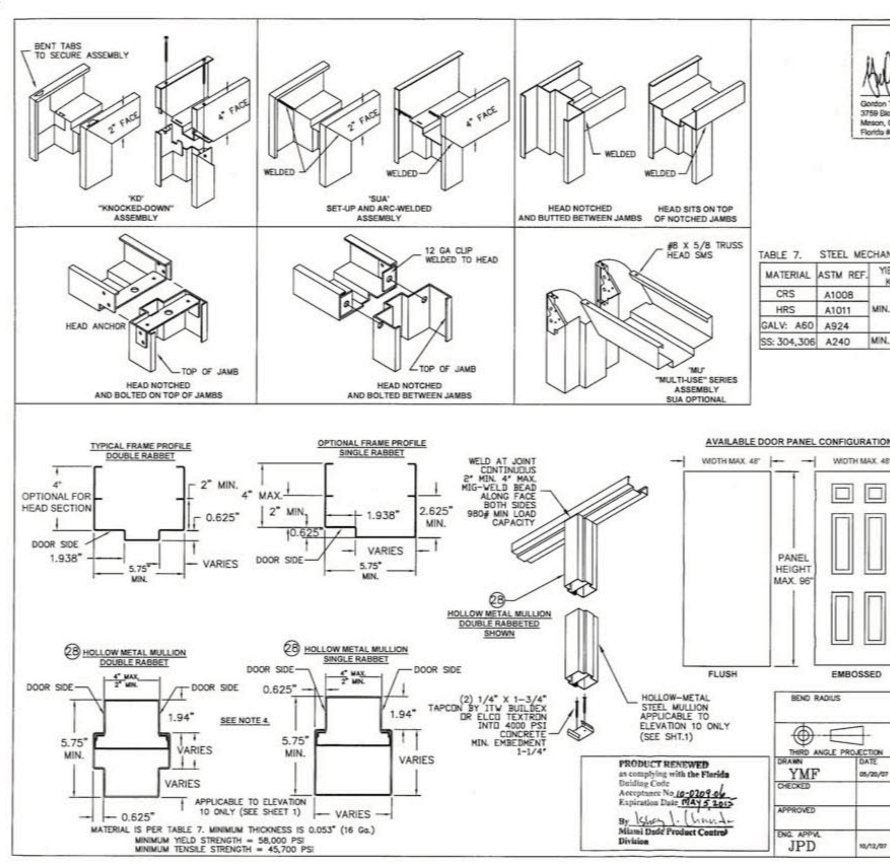

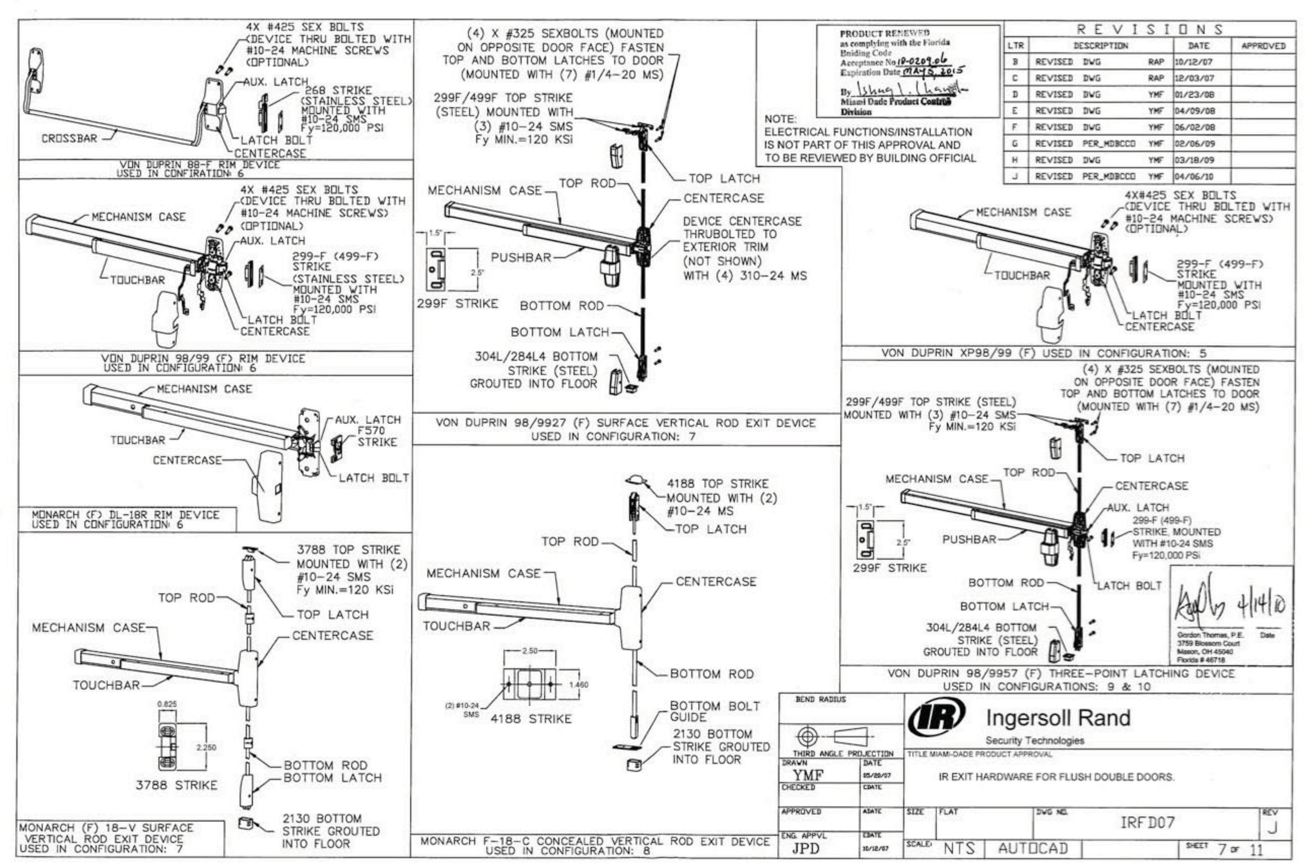

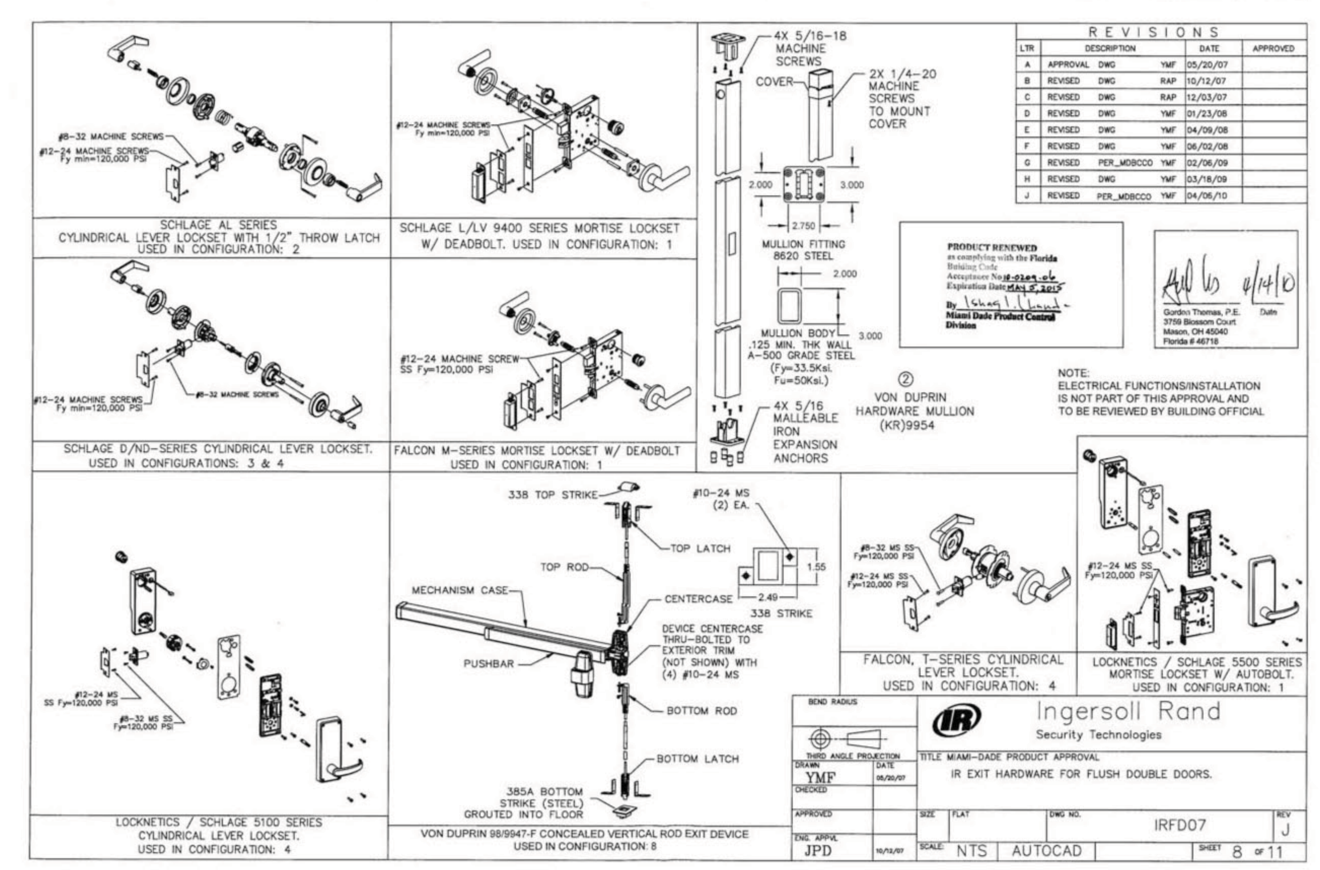

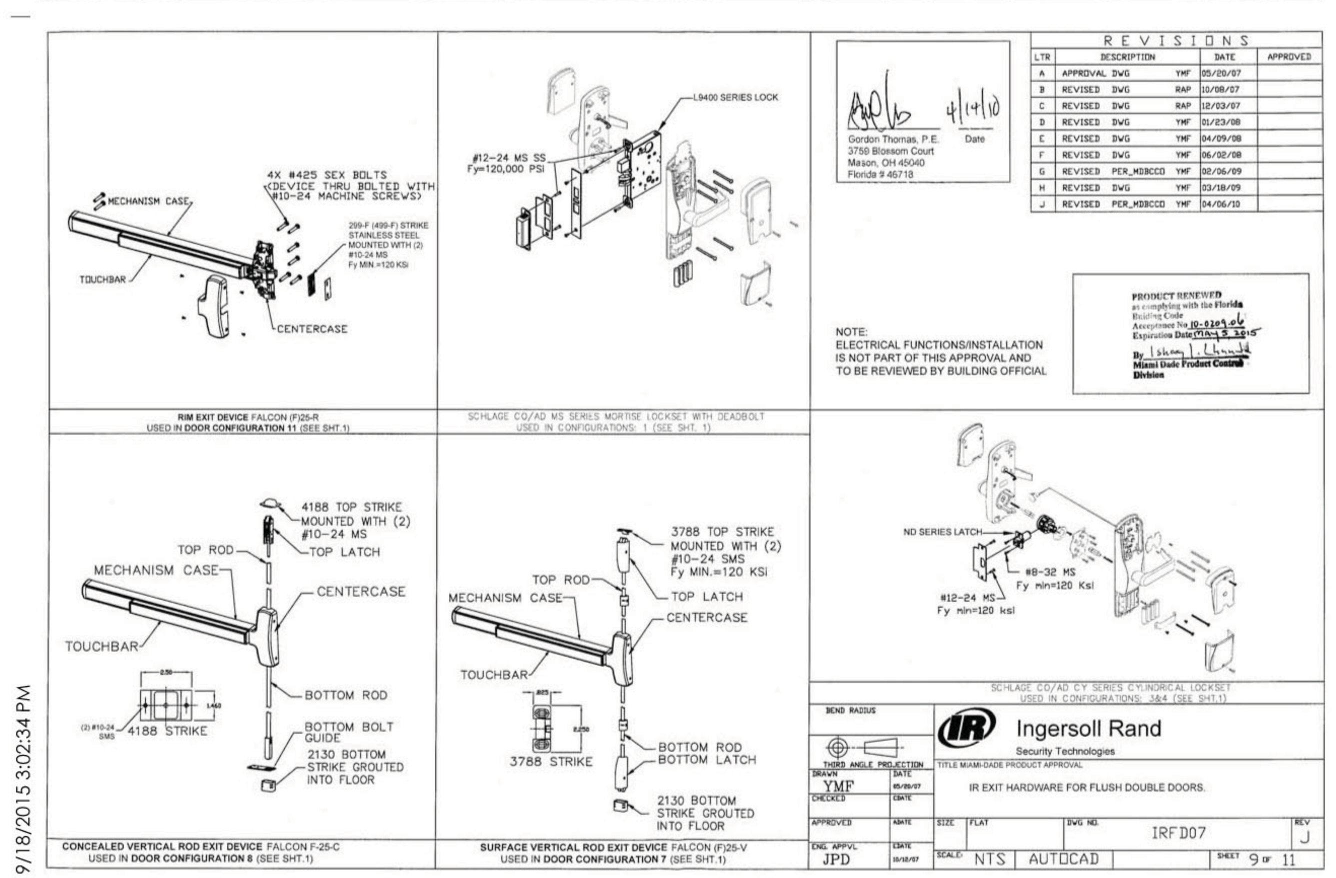

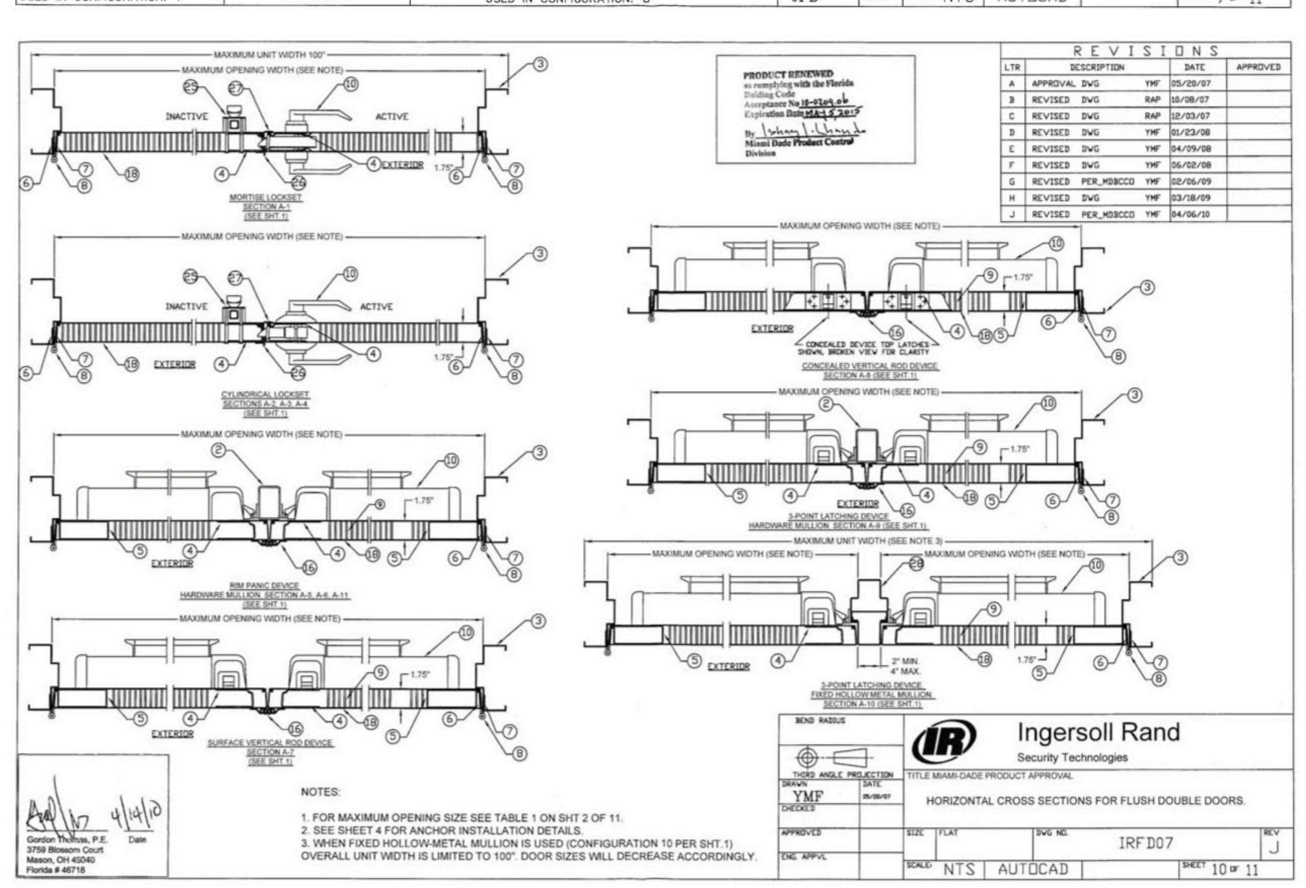

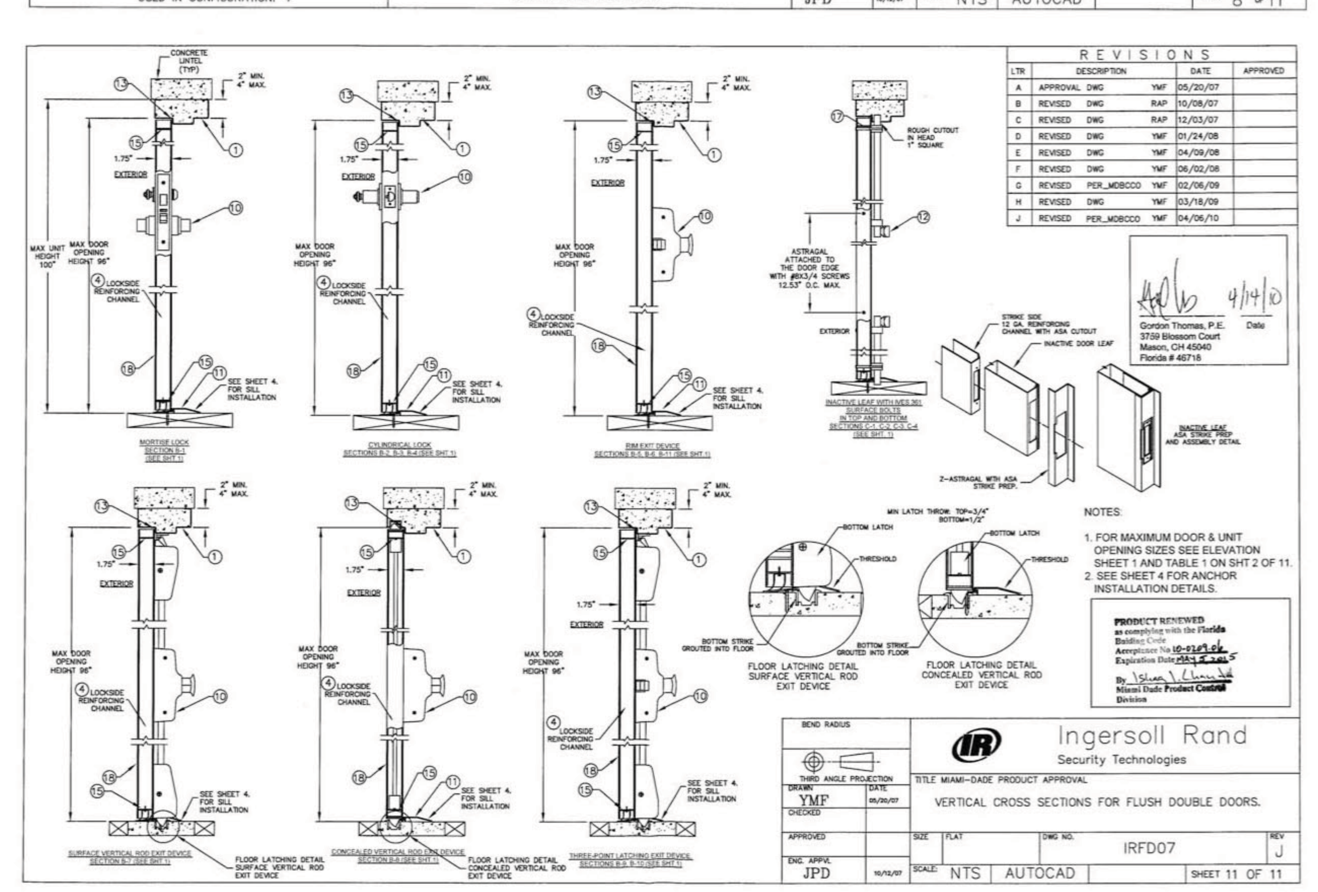

hayes | cumming
architects

2210 central ave, suite 100
st. petersburg, fl 33712
ph 727.321.0900
fx 727.321.0903

AA26001260
hc-arc.com

ANDREW M. HAYES
AR0016166

andrew m. hayes, aia, leed bd+c

© Copyright - All Rights Reserved

members of
AIA American Institute of Architects

CONSULTANT:

CLIENT / PROJECT NAME:

CITY OF KEY WEST
RENOVATION TO

FREDERICK DOUGLASS RECREATION CENTER

111 OLIVIA STREET
KEY WEST, FL 33040

BID SET

Original drawing is 24"x36". Scale accordingly if reduced.

SHEET TITLE:
FLORIDA PRODUCT APPROVAL

REVISIONS:

DATE ISSUED: 03/28/2016
PROJECT NO.: 12.0D01

DRAWING NUMBER:
A-803 SHEET: 48 OF 68

9/18/2015 3:02:34 PM

MIAMI-DADE COUNTY
BUILDING CODE COMPLIANCE OFFICE (BCCO)
PRODUCT CONTROL DIVISION

MIAMI-DADE COUNTY, FLORIDA
METRO-DADE FLAGLER BUILDING
140 WEST FLAGLER STREET, SUITE 1603
MIAMI, FLORIDA 33130-1563
(305) 375-2901 FAX (305) 375-2908
www.miamidade.gov/buildingcode

NOTICE OF ACCEPTANCE (NOA)

Ingersoll-Rand
6810 Hillsdale Court
Indianapolis, IN 46250

SCOPE:
This NOA is being issued under the applicable rules and regulations governing the use of construction materials. The documentation submitted has been reviewed by Miami-Dade County Product Control Division and accepted by the Board of Rules and Appeals (BORA) to be used in Miami Dade County and other areas where allowed by the Authority Having Jurisdiction (AHJ).
This NOA shall not be valid after the expiration date stated below. The Miami-Dade County Product Control Division (In Miami Dade County) and/or the AHJ (in areas other than Miami Dade County) reserve the right to have this product or material tested for quality assurance purposes. If this product or material fails to perform in the accepted manner, the manufacturer will incur the expense of such testing and the AHJ may immediately revoke, modify, or suspend the use of such product or material within their jurisdiction. BORA reserves the right to revoke this acceptance, if it is determined by Miami-Dade County Product Control Division that this product or material fails to meet the requirements of the applicable building code.
This product is approved as described herein, and has been designed to comply with the Florida Building Code, including the High Velocity Hurricane Zone.

DESCRIPTION: IR Series Single Flush Outswing Commercial Steel Doors w / wo Panic Exit Devices

APPROVAL DOCUMENT: Drawing No "**IRF-S07**", titled "Flush Outswing Doors", sheets 1 through 11 of 11, prepared by the manufacturer, dated 05-27-07 and last revised on 04/14/10, signed and sealed by Thomas Gordon, P.E., bearing the Miami-Dade County Product Control Renewal stamp with the Notice of Acceptance number and expiration date by the Miami-Dade County Product Control Division.

MISSILE IMPACT RATING: Large and Small Missile Impact Resistant

Limitations:
1. See Design Pressures, Sizes, Hardware and Water infiltration limitation sheet 1& 2 of the drawings.
2. Expanded foam core options (F) in sheet 4 is limited to EPS by Falcon Corp and Polyisocyanurate –H200 (polyurethane) by Elliott Co.
3. Electrical/Electronic function is not part of this approval, such functions to be reviewed and approved by AHJ.

RENEWAL of this NOA shall be considered after a renewal application has been filed and there has been no change in the applicable building code negatively affecting the performance of this product.

TERMINATION of this NOA will occur after the expiration date or if there has been a revision or change in the materials, use, and/or manufacture of the product or process. Misuse of this NOA as an endorsement of any product, for sales, advertising or any other purposes shall automatically terminate this NOA. Failure to comply with any section of this NOA shall be cause for termination and removal of NOA.

ADVERTISEMENT: The NOA number preceded by the words Miami-Dade County, Florida, and followed by the expiration date may be displayed in advertising literature. If any portion of the NOA is displayed, then it shall be done in its entirety.

INSPECTION: A copy of this entire NOA shall be provided to the user by the manufacturer or its distributors and shall be available for inspection at the job site at the request of the Building Official.
This NOA **revises & renews** NOA # **07-0829.04** consists of this page 1 and evidence pages E1, E-2, as well as approval document mentioned above.
The submitted documentation was reviewed by **Ishaq I. Chanda, P.E.**

NOA No 10-0209.07
Expiration Date: May 05, 2015
Approval Date: May 12, 2010
Page 1

MIAMI-DADE COUNTY APPROVED

Ingersoll-Rand

NOTICE OF ACCEPTANCE: EVIDENCE SUBMITTED

E. MATERIAL CERTIFICATIONS (transferred from file # **07-0829.04**)
1. Test Report No. **03NK2370/R145081**, January 21, 2003, issued by Underwriters laboratories Inc for "Surface Burning Characteristics of Building material" per ASTME84-00a and self Ignition per ASTM1929D for "Elfoam H200", issued to Elliott Co. of Indianapolis Inc.
2. Tensile test report # CTLA-776W (0194H), dtd 02/25/02 prepared by CTL Architectural Division, sheet samples, tested per ASTM E8, signed & sealed by Ramesh Patel, P.E.
3. Tensile Test report No. A103W1-Test 1, 2 & 3 dated 23 APR 03 per ASTME-8 for steel face sheet, prepared by Certified Testing laboratory, signed and sealed by Ramesh Patel, P.E.
4. Test Report No. **NER-384**, reissued dated May 01, 1994, issued by National Evaluation Service Inc to Huntsman Chemical Corporation for "Expanded Polystyrene EPS" for grade 86 & grade 54 for "Surface Burning Characteristics of Building material" per ASTME 84.
5. Test Report No. **9691**, dated August 28, 1987, 1994, issued by United Testing Company Inc. to Huntsman Chemical Corporation for "Expanded Polystyrene EPS" for grade 86 & 54 for "Self Ignition Temperature Test" per ASTMD-1929.
6. Test Report No. **R16529**, July 29, 2005, issued by Underwriters laboratories Inc for foamed plastic for "Surface Burning Characteristics of Building material" per ASTME84 and self Ignition per ASTM1929D for "BRYX-R16529", issued to Falcon Foam, Division of Atlas Roofing Corp.

F. STATEMENTS
1. Letter of conformance & "No financial interest" dated Feb 03, 2010, signed and sealed by Gordon Thomas, P.E.
2. Letter of conformance & "No financial interest" dated June 08, 2008, signed and sealed by Gordon Thomas, P.E. (transferred from file # **07-0829.04**)
3. Laboratory Statement of compliance, part of the above referenced test reports.
4. Addendum letter dated 3/15/10 for test report NCTL210-3645-1, issued by National certified Testing lab.
5. Letter of certification dated 04/20/10, issued by Ingersoll-Rand for electronic CO lock series mechanical /functional parts same as AD, ND and AD-M series.
6. Letter of commitment dated 04/21/10 issued by Ingersoll-Rand for additional tests for butt & continuous Hinges in near future, signed by Yuri Farber.

G. OTHER
1. This NOA **revises & renews** NOA # **07-0829.04**, expiring May 05, 2015.
2. Previously consolidates NOA #(s) associated with this files are 07-0829.04, 02-0712.01, 02-0712.03, 03-0908.03, 04-0203.03, 04-0303.03 and 05-0103.01.
3. Consolidation Test proposal # **06-2468**, dated 04/27/07 approved by BCCO.
4. IR Locks & Panic devices brochures / catalogs supplied by manufacturer.

Ishaq I Chanda, P.E.
Product Control Examiner
NOA No 10-0209.07
Expiration Date: May 05, 2015
Approval Date: May 12, 2010

E - 2

Ingersoll-Rand

NOTICE OF ACCEPTANCE: EVIDENCE SUBMITTED

A. DRAWINGS (transferred from file # **07-0829.04**)
1. Manufacturer's parts and sections drawings.
2. Drawing No "**IRF-S07**", titled "Flush Outswing Doors", sheets 1 through 11 of 11, prepared by the manufacturer, dated 05-27-07 and last revised on 04/14/10, signed and sealed by Thomas Gordon, P.E.

B. TESTS
1. Test report on
   1) Uniform Static Air Pressure Test, Loading per TAS 202-94
   2) Large Missile Impact Test per FBC, TAS 201-94
   3) Cyclic Wind Pressure Loading per FBC, TAS 203-94
   4) Forced Entry Test, per PA 202-94

   Along with manufacturer's parts and section drawings of double flush outswing steel doors, marked by National Certified Testing Lab, Test Reports No. **NCTL-210- 3580-2,** dated March 25, 2009, signed and sealed by Gerry Ferrara, P. E.
2. Test report on (transferred from file # **07-0829.04**)
   1) Air Infiltration Test, per TAS 202-94
   2) Uniform Static Air Pressure Test, Loading per TAS 202-94
   3) Large Missile Impact Test per FBC, TAS 201-94
   4) Cyclic Wind Pressure Loading per FBC, TAS 203-94
   5) Forced Entry Test, per PA 202-94

   Along with manufacturer's parts and section drawings of single Flush outswing steel doors, marked by Certified Testing Lab, Test Reports No(s). **CTLA-776W** dated February 20, 2002, **CTLA-776W1** dated April 25, 2002, **CTLA-776W-2, 3** dated April 20, 2002, **CTLA-1035W-2** dated Feb. 11, 2003, **CTLA-1086-W** dated Nov. 17, 2003, **CTLA –1107W-3** dated Aug. 05, 2003, all signed and sealed by Ramesh Patel, P.E.
3. Additional test reports
   1) Uniform Static Air Pressure Test, Loading per FBC TAS 202-94.
   2) Water Resistance Test per FBC TAS 202-94

   Along with marked-up drawings and installation diagram of double steel commercial doors, prepared by National Certified Testing Laboratories Inc., Test Report No. **NCTL-210-03-0514-11,** dated August 31, 2004 , **NCTL 210- 03-3511-1** dated 04/09/08 and **NCTL 210- 03-3549-1** dated 08/26/08, all signed and sealed by Gerry Ferrara, P. E.
4. Reference test report No.CTLA-1107W for strap anchor qualification.

C. CALCULATIONS: (transferred from file # **07-0829.04**)
1. Statement of compliance & anchor verification evaluation report, dated 04-23-2007 and last revised on 07/14/2008, prepared, signed & sealed by Thomas Gordon., P.E.
2. Evaluation report for Hinges dated 09/01/04, prepared, signed & sealed by Thomas Gordon., P.E.

D. QUALITY ASSURANCE BY:
1. Miami-Dade County Building Code Compliance Office (BCCO).

Ishaq I Chanda, P.E.
Product Control Examiner
NOA No 10-0209.07
Expiration Date: May 05, 2015
Approval Date: May 12, 2010

E - 1

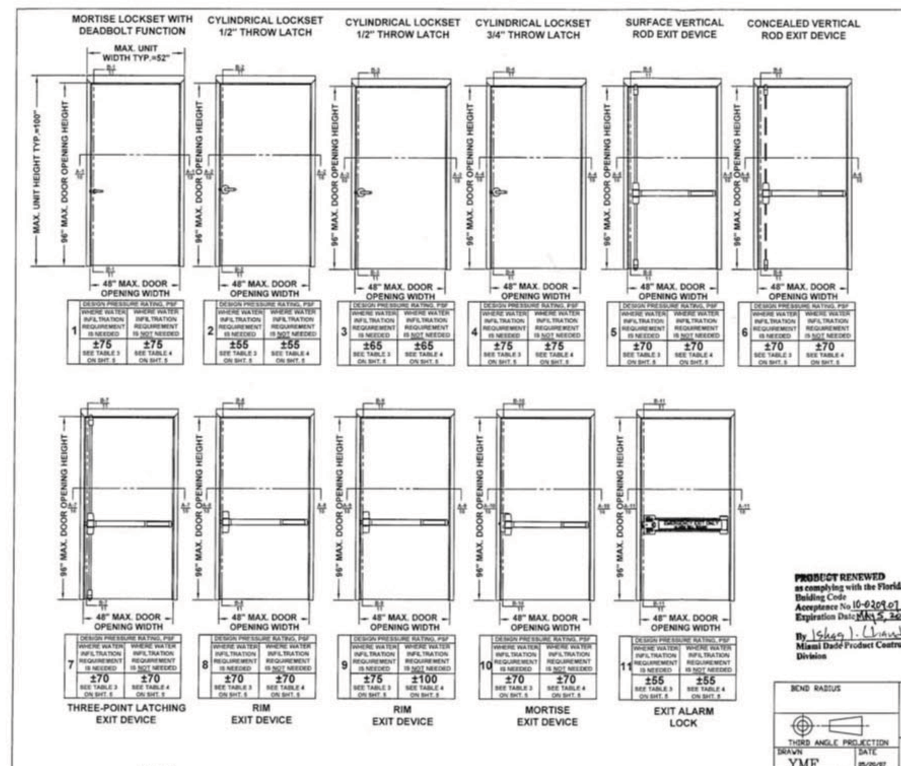

NOTES:
1. INTERIOR VIEWS ARE SHOWN FOR ALL ELEVATIONS
2. SEE TABLE 1 ON SHEET 2 FOR HARDWARE APPLICATIONS AND LIMITATIONS
3. SEE SHEET 3 FOR HINGE REQUIREMENTS
4. SEE SHEET 4 FOR ANCHORING TYPES AND LIMITATIONS
5. SEE SHEET 5 FOR WEATHERSTRIPPING INSTALLATION DETAILS AND LIMITATIONS

LTR	DESCRIPTION		DATE	APPROVED
A	APPROVAL DWG	YMF	05/20/07	
B	REVISED DWG	RAP	10/11/07	
C	REVISED DWG	RAP	12/10/07	
D	REVISED DWG	YMF	01/04/08	
E	REVISED DWG	YMF	03/31/08	
F	REVISED DWG	YMF	06/02/08	
G	REVISED DWG	YMF	01/20/10	
H	REVISED DWG	YMF	04/07/10	

PRODUCT RENEWED as complying with the Florida Building Code Acceptance No 10-0209.07 Expiration Date May 5, 2015 By Ishaq I. Chanda Miami Dade Product Control Division

Gordon Thomas, P.E. 3759 Blossom Court Mason, OH 45040 Florida # 46718 — 4/14/10

Ingersoll Rand Security Technologies — TITLE MIAMI-DADE PRODUCT APPROVAL: FLUSH OUTSWING DOORS AND HARDWARE CONFIGURATIONS IR COMMERCIAL DOOR OPENING SINGLE FLUSH DOORS. — DRAWN YMF 05/20/07 — ENG. APPVL JPD 10/11/07 — DWG NO. IRFS07 — REV H — SCALE NTS — AUTOCAD — SHEET 1 of 11

Door Configuration	Maximum Design Pressure, PSF		Maximum Door Opening Size, in.		Locking Hardware Description				Comments
	Positive	Negative	Width	Height	Hardware Family	Model/Series	Strike Models	IR Brand	
1	75	75	48	96	Mortise Lock	L/LV9400/AD MS	10-072	Schlage	Functions with deadbolt, 3/4" min. throw latch & 1" min. throw deadbolt
	75	75	48	96	Mortise Lock	M	ANSI	Falcon	
	75	75	48	96	Mortise Lock	5500	ANSI	Locknetics / Schlage	functions with autobolt, 3/4" min. throw
2	55	55	48	96	Cylindrical Lock	AL	10-025	Schlage	1/2" throw latch
3	65	65	48	96	Cylindrical Lock	D/ND/AD CYL	10-025	Schlage	1/2" throw latch
4	75	75	48	96	Cylindrical Lock	D/ND/AD CYL	10-025	Schlage	3/4" throw latch
	75	75	48	96	Cylindrical Lock	T	ANSI	Falcon	3/4" throw latch
	75	75	48	96	Cylindrical Lock	5100	ANSI	Locknetics / Schlage	3/4" throw latch
5	70	70	48	96	Surface Vertical Rod Exit Device	98/9927(F)	299F/499F Top, 304L/248L4 Bottom	Von Duprin	
	70	70	48	96	Surface Vertical Rod Exit Device	(F)18-V	3788 Top, 2130 Bottom	Monarch	
	70	70	48	96	Surface Vertical Rod Exit Device	(F)25-V	3788 Top, 2130 Bottom	Falcon	
6	70	70	48	96	Concealed Vertical Rod Exit Device	98/9947-F	338 Top, 385A Bottom	Von Duprin	
	70	70	48	96	Concealed Vertical Rod Exit Device	F-18-C	4188 Top, 2130 Bottom	Monarch	
	70	70	48	96	Concealed Vertical Rod Exit Device	F-25-C	4188 Top, 2130 Bottom	Falcon	
7	70	70	48	96	Three-Point Latching Device	98/9957(F)	299F/499F Top/Middle, 304L/248L4 Bottom	Von Duprin	
8	70	70	48	96	Rim Exit Device	98/99(F)	299F/499F	Von Duprin	
	70	70	48	96	Rim Exit Device	88-F	268	Von Duprin	
	70	70	48	96	Rim Exit Device	(F)DL-18-R	F570	Monarch	
9	75/100 SEE NOTE 2.	75/100 SEE NOTE 2.	48	96	Rim Exit Device	XP98/99(F)	909/954	Von Duprin	
10	70	70	48	96	Mortise Exit Device	98/9975(F)	575	Von Duprin	
	70	70	48	96	Mortise Exit Device	8875(F)	575	Von Duprin	
	70	70	48	96	Mortise Exit Device	(F)18-M	1279	Monarch	
	70	70	48	96	Mortise Exit Device	(F)25-M	1279	Falcon	
11	55	55	48	96	Exit Alarm Lock	2670 GUARD-X	267	Von Duprin	
12	60	60	48	96	Cyl. Deadlock	B600/700/800	10-055	Schlage	
	60	60	48	96	Cyl. Deadlock	D400/800	010018-000/001	Falcon	
13	70	55	48	96	Rim Exit Device	(F)25-R	299F/499F	Falcon	

TABLE 1.

NOTES:
1: SEE SHEETS 7, 8 & 9 FOR LOCKING HARDWARE.
2. . DOOR CONFIGURATION 9 IS RATED FOR MAXIMUM DESIGN PRESSURE ±100 PSF WHEN WATER INFILTRATION REQUIREMENT IS NOT NEEDED, AND UP TO +75 PSF WHEN WATER INFILTRATION REQUIREMENT IS NEEDED (SEE TABLE 3 ON SHT.5)
3. SCHLAGE AL-SERIES CYLINDRICAL LOCK, door configuration 2, IS LIMITED TO ±55 PSF MAXIMUM DESIGN PRESSURE

LTR	DESCRIPTION		DATE	APPROVED
A	APPROVAL DWG	YMF	05/20/07	
B	REVISED DWG	RAP	10/11/07	
C	REVISED DWG	RAP	12/10/07	
D	REVISED DWG	YMF	01/04/08	
E	REVISED DWG	YMF	03/31/08	
F	REVISED DWG	YMF	06/02/08	
G	REVISED DWG	YMF	03/03/09	
H	REVISED DWG	YMF	04/07/10	

Ingersoll Rand Security Technologies — TITLE MIAMI-DADE PRODUCT APPROVAL: FLUSH OUTSWING DOORS AND HARDWARE CONFIGURATIONS IR COMMERCIAL DOOR OPENING SINGLE FLUSH DOORS. — DRAWN YMF 05/20/07 — ENG. APPVL JPD 10/11/07 — DWG NO. IRFS07 — REV H — SCALE NTS — AUTOCAD — SHEET 2 of 11

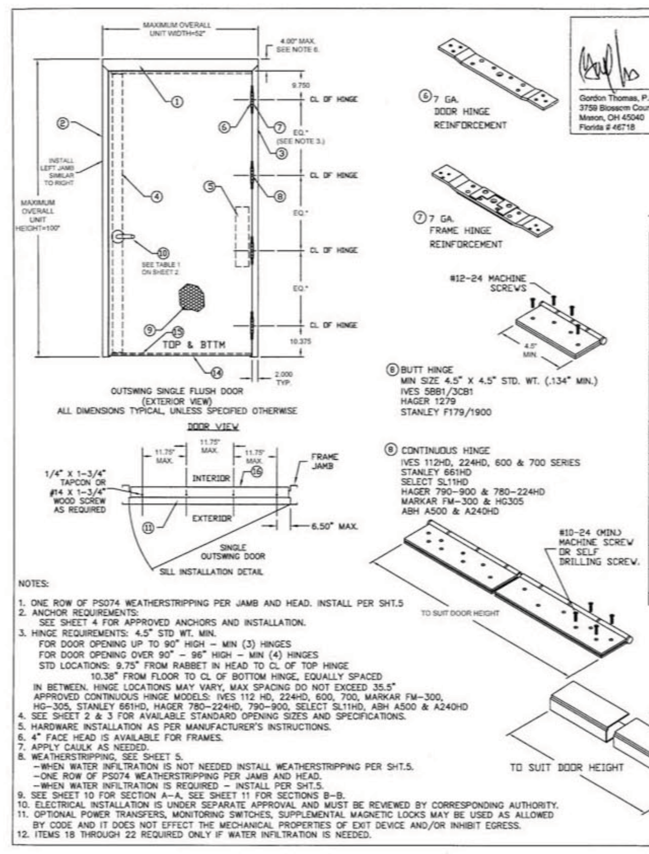

LTR	DESCRIPTION		DATE	APPROVED
A	APPROVAL DWGS.	YMF	05/20/07	
B	REVISED DWGS.	RAP	10/11/07	
C	REVISED DWGS.	RAP	12/10/07	
D	REVISED DWGS.	YMF	01/04/08	
E	REVISED DWGS.	YMF	03/24/08	
F	REVISED DWGS.	YMF	06/02/08	
G	REVISED DWGS.	YMF	03/03/09	
H	REVISED DWGS.	YMF	04/07/10	

TABLE 2.

	QUANTITY	DESCRIPTION	MATERIAL	SIZE
1	1	HEAD SEE SHT 6 ASTM A366	.053" MIN. STL	MAX. 48"
2	1	STRIKE JAMB SEE SHT. 6 ASTM A366	.053" MIN. STL	MAX. 100"
3	1	HINGE JAMB SEE SHT 6 ASTM A366	.053" MIN. STL	MAX. 100"
4	1	LOCK SIDE REINFORCEMENT CHANNEL	.093" MIN. STL	3.5 X 93.44 MAX
5	1	HINGE SIDE PANIC REINFORCEMENT	.067" MIN. STL	MAX. 20"
6	NOTE 3.	HINGE REINFORCEMENT DOOR ASTM A621	.167" MIN. STL.	1.28" X 9.19"
7	NOTE 3.	HINGE REINFORCEMENT FRAME ASTM A621	.167" MIN. STL.	1.3" X 9.187" MAX.
8	NOTE 3.	4.5" X 4.5" BUTT HINGES / OPTIONAL CONTINUOUS HINGE	.134 MIN. / .067" MIN. STL/.12 ALUM	(8) #12-24 MS PER HINGE / MAX. 95"
9	1	CORE MATERIAL (SHT. 4): A) HONEYCOMB B) STEEL STIFFENED C/F) POLYSTYRENE D/F) POLYURETHANE/POLYISOCYANURATE E) MINERAL BOARD TEMPERATURE RISE CORE		
10	1	LOCKING HARDWARE - SEE SHEET 2, TABLE 1		
11	1	THRESHOLD SILL W/BUMPER GASKET 1) ZERO INT'L 566 2) NATIONAL GAURD 950 SEE SHT. 5	.100" ALUM. 6063 T5	5.50"X0.5"X48"MAX.
12	NOTE 2.	JAMB ANCHOR ASTM A924	SEE SHEET 4	
13	3	PS074 WEATHER STRIPPING	TPE	MAX. 24"
14	1	FAS-SEAL DOOR SWEEP	TPE	MAX. 47.66"
15	1	END CHANNEL ASTM A924 (14 GA - INVERTED)		.69" X 1.66" X 47.66" MAX.
16	AS NEEDED	BUTYL RUBBER OR 100% SILICONE		
17	1	DOOR SLAB (16 OR 14 GA)	SEE SHEET 6	4' X 8' MAX.
18	1	BY ZERO INT'L DOOR SEAL No.8144FS / BY STEELCRAFT DOOR SEAL PS074 (SEE NOTE 12)	TPE	MAX. 24"
19	2	BY ZERO INT'L DOOR SWEEP No.539 / BY NGP DOOR SWEEP No.202N (SEE NOTE 12)	TPE	MAX. 96"
20	1	BY ZERO INT'L DOOR SWEEP No.139 / BY NGP OMIT (SEE NOTE 12)	SEE SHEET 5	MAX. 48"
21	1	BY ZERO INT'L ADJUSTABLE STOP No.475 / BY NGP ADJUSTABLE STOP No.170N (SEE NOTE 12)	TPE	MAX. 48"
22	1	BY ZERO INT'L RAIN DRIP No.11 / BY NGP DRIP CAP No.16A (SEE NOTE 12)	SEE SHEET 5	MAX. 48"
23	1	TOP CAP GALV. A60 ASTM A924	.020" MIN. STL	0.5" X 1.76" X 48" MAX.

NOTES:
1. ONE ROW OF PS074 WEATHERSTRIPPING PER JAMB AND HEAD. INSTALL PER SHT.5
2. ANCHOR REQUIREMENTS: SEE SHEET 4 FOR APPROVED ANCHORS AND INSTALLATION.
3. HINGE REQUIREMENTS: 4.5" STD WT. MIN.
FOR DOOR OPENING UP TO 90" HIGH – MIN (3) HINGES
FOR DOOR OPENING OVER 90" – 96" HIGH – MIN (4) HINGES
STD LOCATIONS: 9.75" FROM RABBET IN HEAD TO CL OF TOP HINGE
10.38" FROM FLOOR TO CL OF BOTTOM HINGE, EQUALLY SPACED
IN BETWEEN. HINGE LOCATIONS MAY VARY, MAX SPACING DO NOT EXCEED 35.5"
APPROVED CONTINUOUS HINGE MODELS: IVES 112 HD, 224HD, 600, 700, MARKAR FM-300, HG-305, STANLEY 661HD, HAGER 780–224HD, 790–900, SELECT SL11HD, ABH A500 & A240HD
4. SEE SHEET 2 & 3 FOR AVAILABLE STANDARD OPENING SIZES AND SPECIFICATIONS.
5. HARDWARE INSTALLATION AS PER MANUFACTURER'S INSTRUCTIONS.
6. 4" FACE HEAD IS AVAILABLE FOR FRAMES.
7. APPLY CAULK AS NEEDED.
8. WEATHERSTRIPPING, SEE SHEET 5.
–WHEN WATER INFILTRATION IS NOT NEEDED INSTALL WEATHERSTRIPPING PER SHT.5.
–ONE ROW OF PS074 WEATHERSTRIPPING PER JAMB AND HEAD.
–WHEN WATER INFILTRATION IS REQUIRED – INSTALL PER SHT.5.
9. SEE SHEET 10 FOR SECTION A–A. SEE SHEET 11 FOR SECTIONS B–B.
10. ELECTRICAL INSTALLATION IS UNDER SEPARATE APPROVAL AND MUST BE REVIEWED BY CORRESPONDING AUTHORITY.
11. OPTIONAL POWER TRANSFERS, MONITORING SWITCHES, SUPPLEMENTAL MAGNETIC LOCKS MAY BE USED AS ALLOWED BY CODE AND IT DOES NOT EFFECT THE MECHANICAL PROPERTIES OF EXIT DEVICE AND/OR INHIBIT EGRESS.
12. ITEMS 18 THROUGH 22 REQUIRED ONLY IF WATER INFILTRATION IS NEEDED.

Ingersoll Rand Security Technologies — TITLE: MIAMI–DADE PRODUCT APPROVAL: H–SERIES FLUSH SINGLE DOORS (OUTSWING) IR HARDWARE — DRAWN YMF 05/20/07 — ENG. APPVL JPD — DWG NO. IRFS07 — REV H — SCALE NTS — AUTOCAD — SHEET 3 of 11

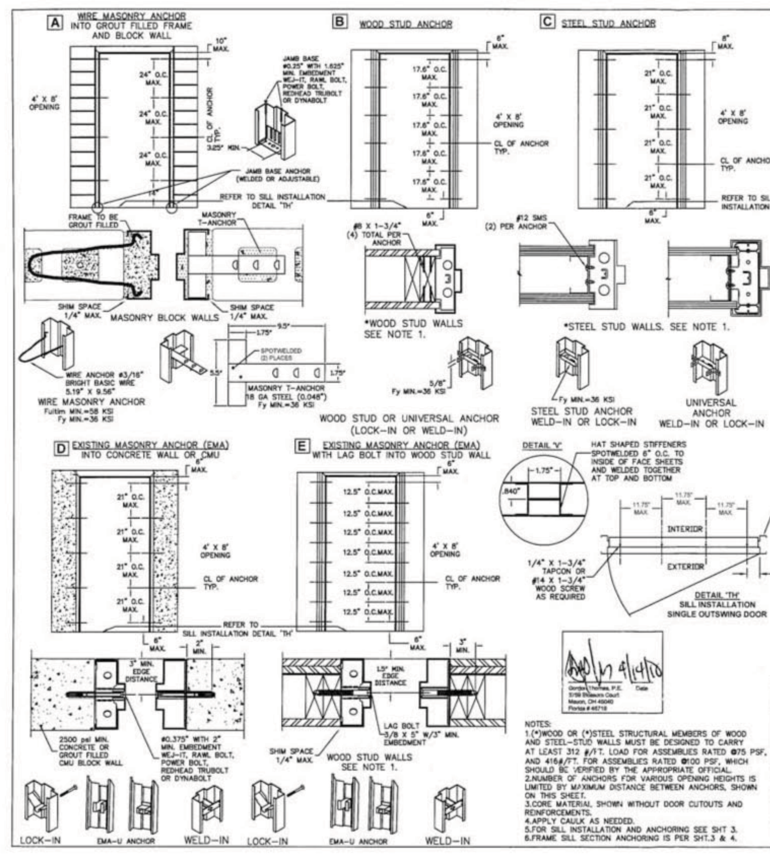

NOTES:
1.(*)WOOD OR (*)STEEL STRUCTURAL MEMBERS OF WOOD AND STEEL–STUD WALLS MUST BE DESIGNED TO CARRY AT LEAST 312 #/FT. LOAD FOR ASSEMBLIES RATED ±75 PSF, AND 416#/FT. FOR ASSEMBLIES RATED ±100 PSF, WHICH SHOULD BE VERIFIED BY THE APPROPRIATE OFFICIAL.
2.NUMBER OF ANCHORS FOR VARIOUS OPENING HEIGHTS IS LIMITED BY MAXIMUM DISTANCE BETWEEN ANCHORS, SHOWN ON THIS SHEET.
3.CORE MATERIAL SHOWN WITHOUT DOOR CUTOUTS AND REINFORCEMENTS.
4.APPLY CAULK AS NEEDED.
5.FOR SILL INSTALLATION AND ANCHORING SEE SHT 3.
6.FRAME SILL SECTION ANCHORING IS PER SHT.3 & 4.

LTR	DESCRIPTION		DATE	APPROVED
A	APPROVAL DWG	YMF	05/20/07	
C	REVISED DWG	RAP	12/10/07	
D	REVISED DWG	YMF	01/04/08	
F	REVISED DWG	YMF	06/02/08	
G	REVISED DWG	YMF	03/03/09	
H	REVISED DWG	YMF	04/07/10	

Ingersoll Rand Security Technologies — TITLE MIAMI–DADE PRODUCT APPROVAL: FRAME ANCHOR DETAILS & INSTALLATION DOOR CORE OPTIONS. — DRAWN YMF 05/20/07 — ENG. APPVL JPD 10/11/07 — DWG NO. IRFS07 — REV H — SCALE NTS — AUTOCAD — SHEET 4 of 11

TABLE 3.

PERIMETER SEAL HARDWARE WHEN WATER INFILTRATION REQUIREMENT DOES APPLY					
ITEM NUMBER SHT 3. TABLE 2	DESCRIPTION	ALLOWABLE DESIGN PRESSURE, PSF, UP TO*	MODEL No./ MANUFACTURER	PART DETAIL	INSTALL PER DETAIL
11	THRESHOLD	+75	566/ZERO INT'L	'T1'	'P1'
			950/NGP	'T2'	'P2'
14	FAS-SEAL SWEEP	+75	STEELCRAFT	'S'	'P1' & 'P2'
18 OR 13	SELF ADHESIVE DOOR SEAL	+75	8144F/ZERO INT'L	'U'	'M' & 'N'
			PS074/STEELCRAFT	'Q'	
19	DOOR SWEEP	+75	539/ZERO INT'L	'W1'	'N'
			202N/NGP	'W2'	
20	DOOR SWEEP	+75	139/ZERO INT'L	'X'	'P1'
21	ADJUSTABLE STOP	+75	475/ZERO INT'L	'Y1'	'M'
			170N/NGP	'Y2'	
22	RAIN DRIP CAP	+75	11/ZERO INT'L	'Z1'	'P1'
			16A/NGP	'Z2'	'P2'
23	DOOR TOP CAP	+75	STEELCRAFT	'R'	'M'

TABLE 4.

PERIMETER SEAL HARDWARE WHEN WATER INFILTRATION REQUIREMENT DOES NOT APPLY				
ITEM NUMBER SHT 3. TABLE 2	DESCRIPTION	MODEL No. MANUFACTURER	PART DETAIL	INSTALL PER DETAIL
11	THRESHOLD	566 BY ZERO INT'L	'T1'	'K'
		950 BY NATIONAL GUARD	'T2'	
14	FAS-SEAL DOOR SWEEP	STEELCRAFT	'S'	'K'
13	PS-074 SELF ADHESIVE WEATHERSTRIPPING	STEELCRAFT	'Q'	'J' & 'L'
23	DOOR TOP CAP	STEELCRAFT	'R'	OPTIONAL

* - SEE ELEVATION SHEET 1 FOR DESIGN PRESSURE RATINGS

LTR	DESCRIPTION		DATE	APPROVED
A	APPROVAL DWG	YMF	05/20/07	
B	REVISED DWG	RAP	10/11/07	
C	REVISED DWG	RAP	12/10/07	
D	REVISED DWG	YMF	01/07/07	
E	REVISED DWG	YMF	04/03/08	
F	REVISED DWG	YMF	06/03/08	
G	REVISED DWG	YMF	03/03/09	
H	REVISED DWG	YMF	04/07/10	

NOTES:
1. SLOT LOCATIONS MAY VARY WITH DIFFERENT DOOR WIDTH.
2. DOOR SWEEP RIGID SECTION IS MADE OF PRO-FAX #PD-199 POLYPROPYLENE HOMOPOLYMER.
3. DOOR SWEEP FLEXIBLE SECTION IS MADE OF SANTOPRENE #101-73
4. FAS-SEAL DOOR SWEEP (14), AND THRESHOLD (11) ARE REQUIRED FOR ALL INSTALLATIONS.

PART DETAILS

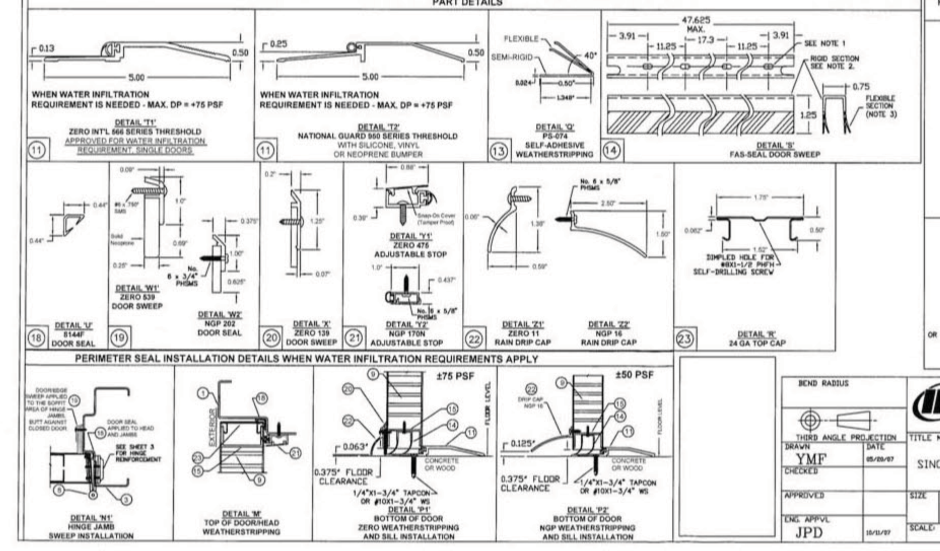

Ingersoll Rand Security Technologies — TITLE MIAMI–DADE PRODUCT APPROVAL: SINGLE FLUSH DOOR PERIMETER SEAL HARDWARE. — DRAWN YMF 05/20/07 — ENG. APPVL JPD — DWG NO. IRFS07 — REV H — SCALE NTS — AUTOCAD — SHEET 5 of 11

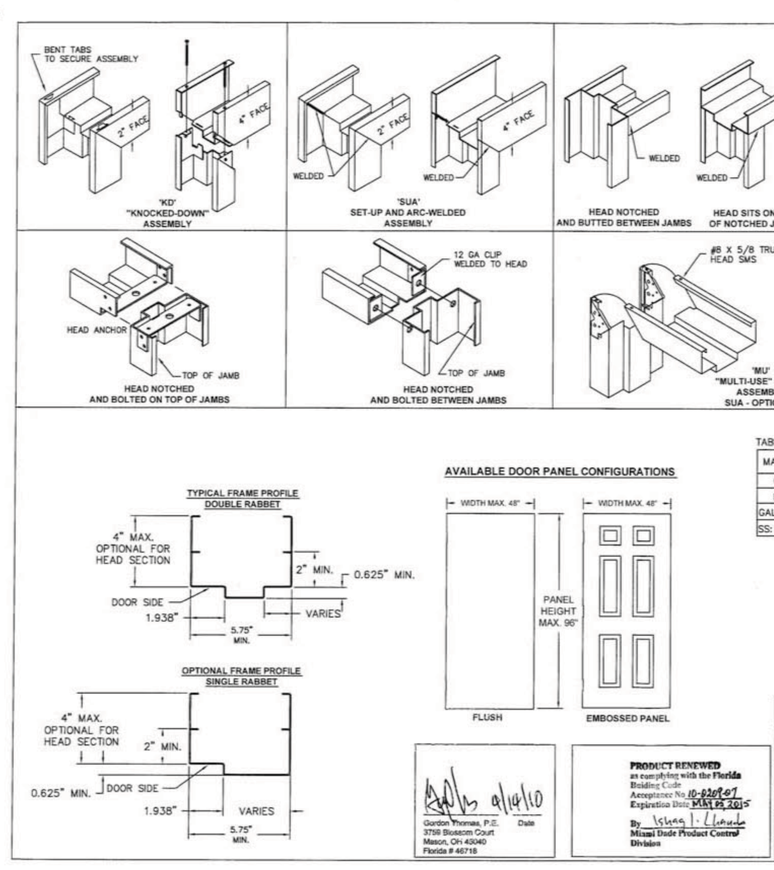

LTR	DESCRIPTION		DATE	APPROVED
A	APPROVAL DWG	YMF	05/20/07	
B	REVISED DWG	RAP	10/11/07	
C	REVISED DWG	RAP	12/10/07	
D	REVISED DWG	YMF	01/08/08	
E	REVISED DWG	YMF	04/08/08	
F	REVISED DWG	YMF	06/03/08	
G	REVISED DWG	YMF	03/03/09	
H	REVISED DWG	YMF	04/07/10	

TABLE 5. AVAILABLE DOOR CONFIGURATIONS

CORE MATERIAL PER SHT.4	MAXIMUM OPENING SIZE WIDTH / HEIGHT	SKIN MATERIAL DESCR.	GA./MIN. THK
HONEYCOMB POLYSTYRENE POLYURETHANE (POLYISOCYANURATE) TEMPERATURE RISE STEEL STIFFENED	VARIES SEE SHEET 2 TABLE 1	CRS GALV	16/.053" 14/.067"
HONEYCOMB POLYSTYRENE POLYURETHANE	VARIES SEE SHEET 2 TABLE 1	STAINLESS STEEL	16/.053"

TABLE 6. AVAILABLE FRAME CONFIGURATIONS

FRAME SERIES	JAMB DEPTH	MAX. OPENING SIZE WIDTH / HEIGHT	MATERIAL DESCR.	GA./MIN. THK
F	5.75" MIN.	VARIES SEE SHEET 2 TABLE 1	CRS/HRS GALV	16/.053" 14/.067" 12/.099"
			STAINLESS STEEL	16/.053"
MU	5.75" MIN.	VARIES SEE SHEET 2 TABLE 1	CRS/HRS GALV	16/.053" 14/.067"

TABLE 7. STEEL MECHANICAL PROPERTIES

MATERIAL	ASTM REF.	YIELD KSI	TENSILE KSI
CRS	A1008	MIN. 30.1	MIN. 44.7
HRS	A1011		
GALV: A60	A924		
SS: 304,306	A240	MIN. 31.2	MIN. 73.2

NOTES:
1. DOOR CONSTRUCTION
1.1. MINIMUM DOOR THICKNESS – 1 3/4"
1.2. DOOR SIZE MAY VARY, SUBJECTED TO COMPLIANCE WITH FLORIDA BUILDING CODE AND PRODUCT AVAILABILITY FROM MANUFACTURER (SEE SHEET 2 FOR AVAILABLE HARDWARE)
2. FRAME CONSTRUCTION
1.1. MINIMUM JAMB DEPTH – 5 3/4", STOP HEIGHT – 5/8"
2.2. FRAMES AVAILABLE AS FLUSH (F–SERIES) AND MULT–USE (MU–SERIES) (SEE TABLE 6)
3. FOR MATERIAL SPECIFICATIONS REFERENCE SEE TABLE 7.

Ingersoll Rand Security Technologies — TITLE MIAMI–DADE PRODUCT APPROVAL: FRAME PROFILE, CORNER DETAILS AND DOOR FRAME MATERIAL, AND SIZE OPTIONS — DRAWN YMF 05/20/07 — ENG. APPVL JPD 10/11/07 — DWG NO. IRFS07 — REV H — SCALE NTS — AUTOCAD — SHEET 6 of 11

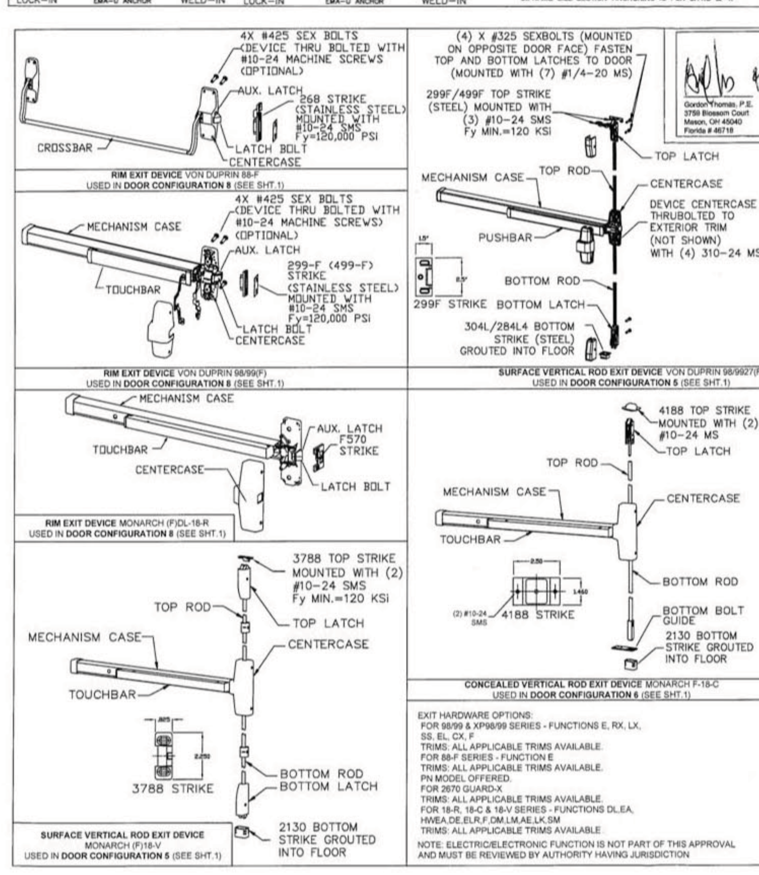

NOTE:
ELECTRICAL FUNCTIONS/INSTALLATION IS NOT PART OF THIS APPROVAL AND TO BE REVIEWED BY BUILDING OFFICIAL

EXIT HARDWARE OPTIONS:
FOR 98/99 & XP98/99 SERIES - FUNCTIONS E, RX, LX, SS, EL, CX, F
TRIMS: ALL APPLICABLE TRIMS AVAILABLE.
FOR 88-F SERIES - FUNCTION E
TRIMS: ALL APPLICABLE TRIMS AVAILABLE.
PN MODEL OFFERED.
FOR 2670 GUARD-X
TRIMS: ALL APPLICABLE TRIMS AVAILABLE.
FOR 18-R, 18-C & 18-V SERIES - FUNCTIONS DL,EA, HWEA,DE,ELR,F,DM,LM,AE,LK,SM
TRIMS: ALL APPLICABLE TRIMS AVAILABLE.
NOTE: ELECTRIC/ELECTRONIC FUNCTION IS NOT PART OF THIS APPROVAL AND MUST BE REVIEWED BY AUTHORITY HAVING JURISDICTION

LTR	DESCRIPTION		DATE	APPROVED
A	APPROVAL DWG	YMF	05/20/07	
B	REVISED DWG	RAP	10/11/07	
C	REVISED DWG	RAP	12/10/07	
D	REVISED DWG	YMF	01/08/08	
F	REVISED DWG	YMF	06/03/08	
G	REVISED DWG	YMF	03/03/09	
H	REVISED DWG	YMF	04/07/10	

Ingersoll Rand Security Technologies — TITLE MIAMI-DADE PRODUCT APPROVAL: IR EXIT HARDWARE OPTIONS FOR FLUSH SINGLE DOORS — DRAWN YMF 05/20/07 — ENG. APPVL JPD 10/11/07 — DWG NO. IRFS07 — REV H — SCALE NTS — AUTOCAD — SHEET 7 of 11

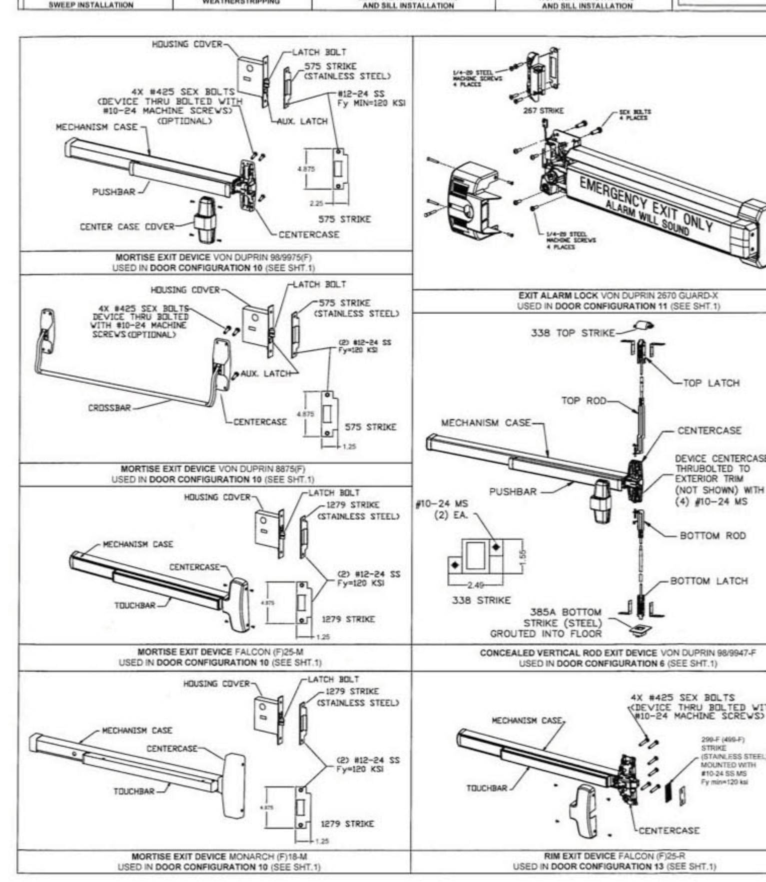

LTR	DESCRIPTION		DATE	APPROVED
A	APPROVAL DWG	YMF	05/20/07	
B	REVISED DWG	RAP	10/11/07	
C	REVISED DWG	RAP	12/10/07	
D	REVISED DWG	YMF	12/10/07	
E	REVISED DWG	YMF	04/08/08	
F	REVISED DWG	YMF	06/03/08	
G	REVISED DWG	YMF	03/03/09	
H	REVISED DWG	YMF	04/07/10	

NOTES:
1. ELECTRICAL FUNCTIONS/INSTALLATION IS NOT PART OF THIS APPROVAL AND TO BE REVIEWED BY BUILDING OFFICIAL
2. EXIT HARDWARE OPTIONS:
FOR 98/99 & XP98/99 SERIES - FUNCTIONS E, RX, LX, SS, EL, CX, F
TRIMS: ALL APPLICABLE TRIMS AVAILABLE.
FOR 88-F SERIES - FUNCTION E
TRIMS: ALL APPLICABLE TRIMS AVAILABLE. PN MODEL OFFERED.
FOR 2670 GUARD-X
TRIMS: ALL APPLICABLE TRIMS AVAILABLE.
FOR 18-R, 18-C & 18-V SERIES - FUNCTIONS DL,EA, HWEA,DE,ELR,F,DM,LM,AE,LK,SM
TRIMS: ALL APPLICABLE TRIMS AVAILABLE.
FOR (F)25-R, F-25-C & (F)25-V SERIES - FUNCTIONS AE, DM, LM, LK, KOR, ED, EL, EA, FSA, FSE, HWEA
TRIMS: ALL APPLICABLE TRIMS AVAILABLE.

Ingersoll Rand Security Technologies — TITLE MIAMI-DADE PRODUCT APPROVAL: IR EXIT HARDWARE OPTIONS FOR FLUSH SINGLE DOORS. — DRAWN YMF 05/20/07 — ENG. APPVL JPD — DWG NO. IRFS07 — REV H — SCALE NTS — AUTOCAD — SHEET 8 of 11

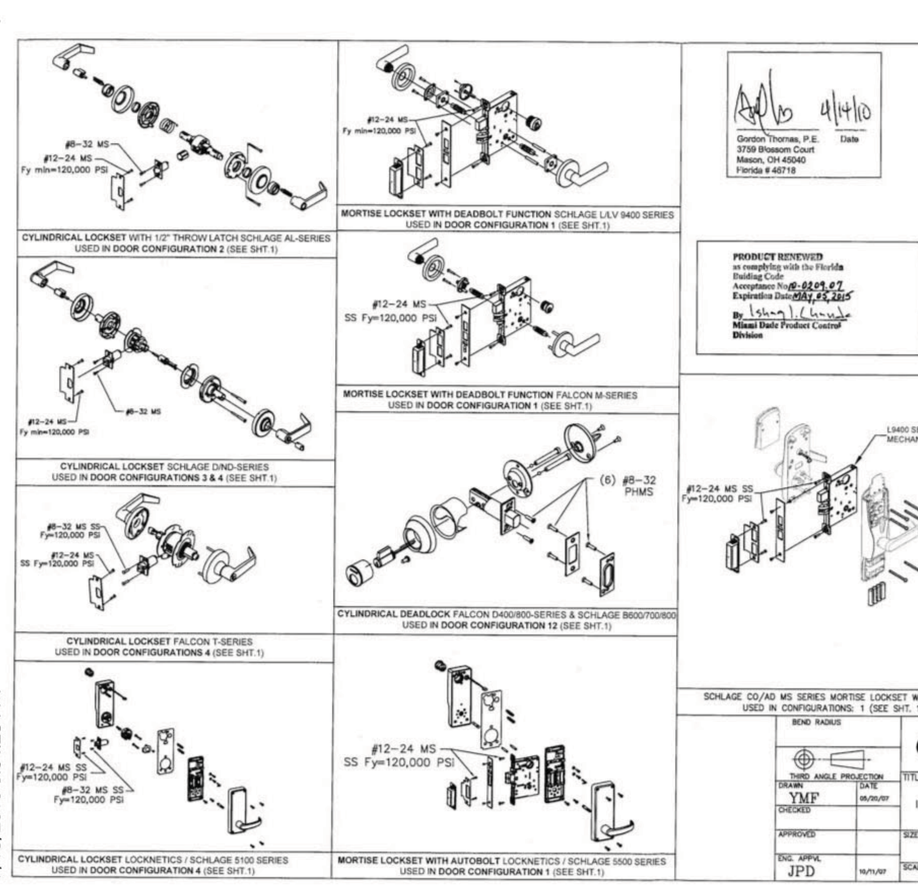

LTR	DESCRIPTION		DATE	APPROVED
A	APPROVAL DWG	YMF	05/20/07	
B	REVISED DWG	RAP	10/11/07	
C	REVISED DWG	RAP	12/10/07	
D	REVISED DWG	YMF	01/08/08	
E	REVISED DWG	YMF	04/08/08	
F	REVISED DWG	YMF	06/03/08	
G	REVISED DWG	YMF	03/03/09	
H	REVISED DWG	YMF	04/07/10	

NOTE:
ELECTRICAL FUNCTIONS/INSTALLATION IS NOT PART OF THIS APPROVAL AND TO BE REVIEWED BY BUILDING OFFICIAL

Ingersoll Rand Security Technologies — TITLE MIAMI-DADE PRODUCT APPROVAL: IR HARDWARE OPTIONS FOR FLUSH SINGLE DOORS. — DRAWN YMF 05/20/07 — ENG. APPVL JPD 10/11/07 — DWG NO. IRFS07 — REV H — SCALE NTS — AUTOCAD — SHEET 9 of 11

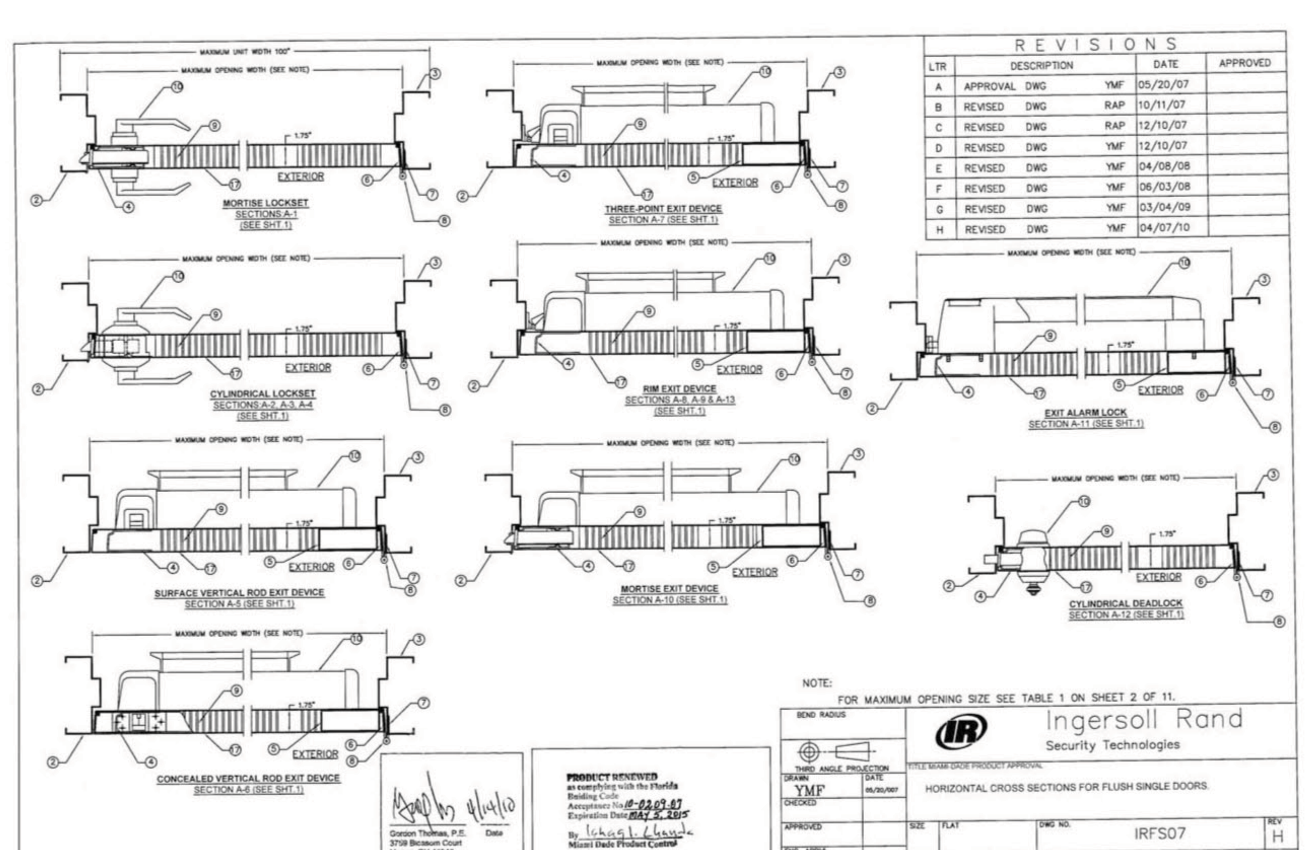

LTR	DESCRIPTION		DATE	APPROVED
A	APPROVAL DWG	YMF	05/20/07	
B	REVISED DWG	RAP	10/11/07	
C	REVISED DWG	RAP	12/10/07	
D	REVISED DWG	YMF	12/10/07	
E	REVISED DWG	YMF	04/08/08	
F	REVISED DWG	YMF	06/03/08	
G	REVISED DWG	YMF	03/04/09	
H	REVISED DWG	YMF	04/07/10	

NOTE:
FOR MAXIMUM OPENING SIZE SEE TABLE 1 ON SHEET 2 OF 11.

Ingersoll Rand Security Technologies — TITLE MIAMI-DADE PRODUCT APPROVAL: HORIZONTAL CROSS SECTIONS FOR FLUSH SINGLE DOORS. — DRAWN YMF 05/20/07 — ENG. APPVL JPD 10/11/07 — DWG NO. IRFS07 — REV H — SCALE NTS — AUTOCAD — SHEET 10 of 11

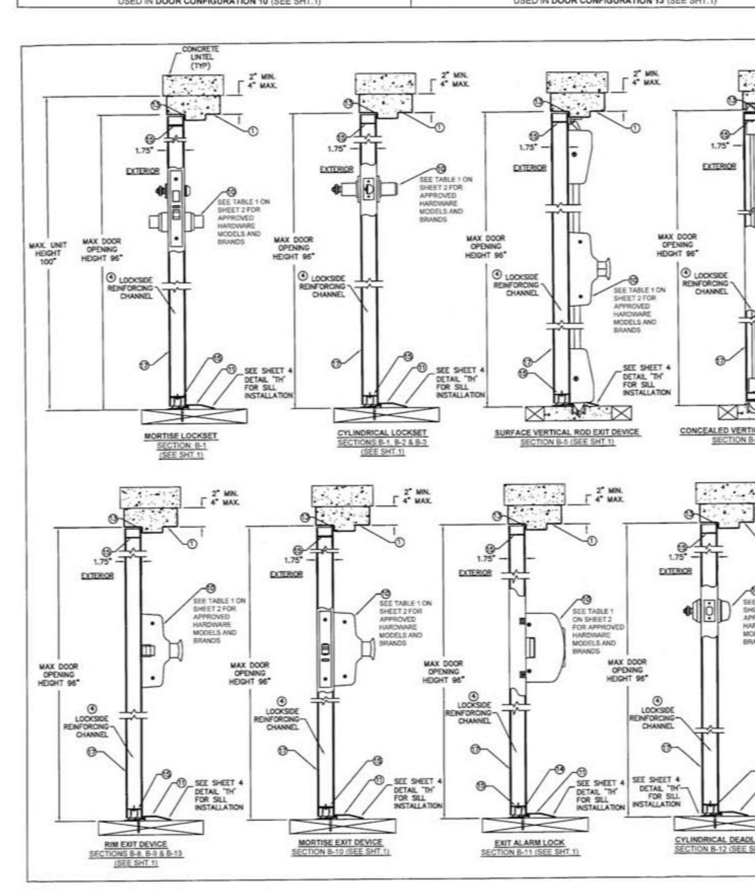

LTR	DESCRIPTION		DATE	APPROVED
A	APPROVAL DWG	YMF	05/20/07	
B	REVISED DWG	RAP	10/11/07	
C	REVISED DWG	RAP	12/10/07	
D	REVISED DWG	YMF	01/08/08	
E	REVISED DWG	YMF	04/08/08	
F	REVISED DWG	YMF	06/03/08	
G	REVISED DWG	YMF	03/04/09	
H	REVISED DWG	YMF	04/07/10	

NOTES:
1. FOR MAXIMUM DOOR & UNIT OPENING SIZES SEE ELEVATION SHEET 1 AND TABLE 1 ON SHEET 2 OF 11.
2. SEE SHEET 4 OF 11 FOR ANCHOR INSTALLATION DETAILS.

Ingersoll Rand Security Technologies — TITLE MIAMI-DADE PRODUCT APPROVAL: VERTICAL CROSS SECTIONS FOR FLUSH SINGLE DOORS. — DRAWN YMF 05/20/07 — ENG. APPVL JPD 10/11/07 — DWG NO. IRFS07 — REV H — SCALE NTS — AUTOCAD — SHEET 11 of 11

9/18/2015 3:04:28 PM

---

hayes | cumming architects
2210 central ave, suite 100
st. petersburg, fl 33712
ph 727.321.0900
fx 727.321.0903
AA26001260
hc-arc.com
ANDREW M. HAYES AR0016166
andrew m. hayes, aia, leed bd+c

© Copyright - All Rights Reserved

members of
American Institute of Architects

CONSULTANT:

CLIENT / PROJECT NAME:
CITY OF KEY WEST
RENOVATION TO

FREDERICK DOUGLASS RECREATION CENTER

111 OLIVIA STREET
KEY WEST, FL 33040

BID SET

Original drawing is 24"x36". Scale accordingly if reduced.

SHEET TITLE:
FLORIDA PRODUCT APPROVAL

REVISIONS:

DATE ISSUED: 03/28/2016
PROJECT NO.: 12.0D01

DRAWING NUMBER:
A-804 SHEET: 49 OF 68

![OM Engineering Services, Inc.]

OM ENGINEERING SERVICES, INC.
Civil • Structural • Inspections

Product Evaluation Report

DATE	7/8/2009			
MANUFACTURER	YKK AP 332 Firetower Road Dublin, GA 31021			
PRODUCT NAME	35H – ALUMINUM ENTRANCE DOORS (Large Missile Impact)			
MATERIAL	ALUMINUM 6063-T5			
MAX. DESIGN PRESSURE	SEE PRESSURE CHARTS ON REFERENCE DRAWINGS			
MAX. PANEL WIDTH	SEE PRESSURE CHARTS ON REFERENCE DRAWINGS			
MAX. PANEL HEIGHT	SEE PRESSURE CHARTS ON REFERENCE DRAWINGS			
HVHZ	YES			
IMPACT	YES			
REFERENCE DRAWING	35H-LM			
TEST REPORT	**TEST STANDARDS**	**DESCRIPTION**	**PRESSURE**	**RESULT**
0231-0711-02 (Specimen #6)	TAS 201, SSTD 12-99, ASTM E1886 & ASTM E1996	Large Missile Impact Test *	--	PASS
Hurricane Testing Lab (HTL) 7600 N W 79th Ave Miami, FL 33166	TAS 203, SSTD 12-99, ASTM E1886 & ASTM E1996	Cyclic Load Test	+50/-70 psf	PASS
TEST REPORT	**TEST STANDARDS**	**DESCRIPTION**	**PRESSURE**	**RESULT**
0905.02-06	TAS 202	Air Infiltration Test	1.57 psf	PASS
	TAS 202	Static Air Pressure Test	+70/-90 psf	PASS
American Test Lab of South Florida (ATLSF) 6801 NW 17th Ave Ft. Lauderdale, FL 33309	TAS 201	Large Missile Impact Test	--	PASS
	TAS 203	Cyclic Load Test	+70/-90 psf	PASS
TEST REPORT	**TEST STANDARDS**	**DESCRIPTION**	**PRESSURE**	**RESULT**
0231-0817-05	ASTM E283	Air Infiltration Test	1.57 psf & 6.24 psf	PASS
Hurricane Testing Lab (HTL) 7600 N W 79th Ave Miami, FL 33166	ASTM E331	Water Infiltration Test	12.0 psf	PASS
	ASTM E330	Uniform Static Load Test	+70/-90 psf	PASS
TEST REPORT	**TEST STANDARDS**	**DESCRIPTION**	**PRESSURE**	**RESULT**
0231-0923-02 (#2) 0231-1203-02 (#5) 0231-0415-03 (#3)	ASTM E283 and TAS 202	Air Infiltration Test	1.57 psf & 6.24 psf	PASS
	ASTM E330 and TAS 202	Static Load Test	+70/-70 psf	PASS
	ASTM E330 and TAS 202	Static Load Test	-90 psf	PASS
American Test Lab of South Florida (ATLSF) 6801 NW 17th Ave Ft. Lauderdale, FL 33309	SFBC 3603.2(b)5 and TAS 202	Forced Entry Resistance Test	300 lb	PASS
	TAS 201, SSTD 12-99 and ASTM E1886/E1996	Small Missile Impact Test	--	PASS
	TAS 203 and ASTM E1996	Cyclic Load Test	+70/-90 psf	PASS

*** Mullions were impacted**

621 E Washington St Suite 8 - Orlando, Florida 32801
Phone: 407-704-7815 • Fax: 407-704-7816 • www.omengineer.com

OM ENGINEERING SERVICES, INC.
Civil • Structural • Inspections

NOTES:

This product is approved for use in High Velocity Hurricane Zone. This product is impact resistant and does not require impact protective devices.

See pressure charts on reference drawings for design pressures for given frame dimensions (width, height, transom height). Follow installation instructions detailed in reference drawings and specified maximum dimensions for achieving the specified design parameters.

Comparative Analysis was performed per FBC 2007 Chapter 16. Anchor calculations were performed by engineering analysis. Calculation report is available upon request. Glass performance meets ASTM E1300-04 requirements.

Under limitations of use detailed in this report, to the best of my knowledge and ability, the above product conforms to the requirements of 2007 Florida Building Code.

Evaluation Report Engineer of Record:

7/1/09

Nimesh J. Bhavsar, P.E.
Florida Registered Professional Engineer #56861

621 E Washington St Suite 8 - Orlando, Florida 32801
Phone: 407-704-7815 • Fax: 407-704-7816 • www.omengineer.com

YKK AP AMERICA
35 H - Aluminum Entrance Doors
Insulated Glazing - Large Missile Impact

SHEET	TABLE OF CONTENTS SHEET DESCRIPTION
1	GENERAL NOTES AND ELEVATION
2	HORIZONTAL SECTIONS
3	VERTICAL SECTIONS
4	VERTICAL SECTIONS (CONT'D)
5	PART DETAILS
6	BILL OF MATERIALS
7	GLAZING DETAILS AND PRESSURE CHARTS
8	FRAME ASSEMBLY

INSTALLATION NOTES:

1. ONE (1) INSTALLATION ANCHOR IS REQUIRED AT EACH ANCHOR LOCATION SHOWN, UNLESS OTHERWISE STATED.
2. THE NUMBER OF INSTALLATION ANCHORS DEPICTED IS THE MINIMUM NUMBER OF ANCHORS TO BE USED FOR PRODUCT INSTALLATION.
3. INSTALL INDIVIDUAL INSTALLATION ANCHORS WITHIN A TOLERANCE OF ±1/2 INCH OF THE DEPICTED LOCATION IN THE ANCHOR LAYOUT DETAIL (I.E., WITHOUT CONSIDERATION OF TOLERANCES). TOLERANCES ARE NOT CUMULATIVE FROM ONE INSTALLATION ANCHOR TO THE NEXT.
4. FOR INSTALLATION ON WOOD SUBSTRATE, USE 5/16" FH LAG SCREWS. USE FOUR (4) SCREWS AT EACH VERTICAL AND HORIZONTAL MULLION END. SEE INSTALLATION DETAILS FOR EMBEDMENT AND SPACING REQUIREMENTS.
5. FOR INSTALLATION ON MASONRY AND CONCRETE SUBSTRATE, USE 5/16" DIAMETER ITW TAPCON SCREWS. USE TWO (2) SCREWS AT EACH VERTICAL AND HORIZONTAL MULLION END. SEE INSTALLATION DETAILS FOR EMBEDMENT AND SPACING REQUIREMENTS.
6. FOR INSTALLATION ON STEEL FRAME SUBSTRATE AND APPROVED YKK ALUMINUM MULLIONS, USE 5/16" DIAMETER SELF TAPPING SCREWS. USE TWO (2) SCREWS AT EACH VERTICAL AND HORIZONTAL MULLION END. SEE INSTALLATION DETAILS FOR EMBEDMENT AND SPACING REQUIREMENTS.
7. MINIMUM EMBEDMENT AND EDGE DISTANCE EXCLUDE WALL FINISHES, INCLUDING BUT NOT LIMITED TO STUCCO, FOAM, BRICK VENEER, AND SIDING.
8. INSTALLATION ANCHORS AND ASSOCIATED HARDWARE MUST BE MADE OF CORROSION RESISTANT MATERIAL OR HAVE A CORROSION RESISTANT COATING.
9. INSTALLATION ANCHORS SHALL BE INSTALLED IN ACCORDANCE WITH ANCHOR MANUFACTURER'S INSTALLATION INSTRUCTIONS, AND ANCHORS SHALL NOT BE USED IN SUBSTRATES WITH STRENGTHS LESS THAN THE MINIMUM STRENGTH SPECIFIED BY THE ANCHOR MANUFACTURER.
10. INSTALLATION ANCHOR CAPACITIES FOR PRODUCTS HEREIN ARE BASED ON SUBSTRATE MATERIALS WITH THE FOLLOWING PROPERTIES:
   A. WOOD - MINIMUM SPECIFIC GRAVITY OF 0.55.
   B. MASONRY - STRENGTH CONFORMANCE TO ASTM C-90, GRADE N, TYPE 1 (OR GREATER)
   C. CONCRETE - MINIMUM COMPRESSIVE STRENGTH OF 3190 KSI.
   D. STEEL - MINIMUM YIELD STRENGTH OF 33 KSI. MINIMUM WALL THICKNESS OF 33 MILS.
   E. ALUMINUM - ALLOWABLE STRESS OF 13.94 KSI. MINIMUM WALL THICKNESS OF 0.090".

CAN BE USED WITH
YKK YHS 50 STOREFRONT SYSTEMS
SEE SEPARATE APPROVAL

GENERAL NOTES:

1. THE PRODUCT SHOWN HEREIN IS DESIGNED AND MANUFACTURED TO COMPLY WITH THE 2007 FLORIDA BUILDING CODE, INCLUDING REQUIREMENTS FOR HVHZ.
2. ADEQUACY OF THE EXISTING STRUCTURAL CONCRETE/MASONRY, 2X AND STEEL STUD FRAMING AS A MAIN WIND FORCE RESISTING SYSTEM CAPABLE OF WITHSTANDING AND TRANSFERRING APPLIED PRODUCT LOADS TO THE FOUNDATION IS THE RESPONSIBILITY OF THE ENGINEER OR ARCHITECT OF RECORD FOR THE PROJECT OF INSTALLATION.
3. 2X BUCKS (WHEN USED) SHALL BE DESIGNED AND ANCHORED TO PROPERLY TRANSFER ALL LOADS TO THE STRUCTURE. BUCK DESIGN AND INSTALLATION ARE THE RESPONSIBILITY OF THE ENGINEER OR ARCHITECT OF RECORD FOR THE PROJECT OF INSTALLATION.
4. THE INSTALLATION DETAILS DESCRIBED HEREIN ARE GENERIC AND MAY NOT REFLECT ACTUAL CONDITIONS FOR A SPECIFIC SITE. IF SITE CONDITIONS CAUSE INSTALLATION TO DEVIATE FROM THE REQUIREMENTS DETAILED HEREIN, A LICENSED ENGINEER OR ARCHITECT SHALL PREPARE SITE SPECIFIC DOCUMENTS FOR USE IN CONJUNCTION WITH THIS DOCUMENT.
5. THIS PRODUCT DOES NOT REQUIRE IMPACT PROTECTIVE DEVICES.
6. MATERIALS INCLUDING BUT NOT LIMITED TO STEEL/METAL SCREWS, THAT COME INTO CONTACT WITH OTHER DISSIMILAR MATERIALS SHALL MEET THE REQUIREMENTS OF THE 2007 FLORIDA BUILDING CODE SECTION 2003.8.4.

* JAMB ANCHOR SPACING
Wood Substrate: 10" Maximum O-C
Masonry/Concrete Substrate: 16" Maximum O-C
Steel/Aluminum Substrate: 20" Maximum O-C

** ANCHOR QUANTITIES FOR MULLION ENDS
VERTICAL MULLION ENDS
Wood Substrate: (4) Anchors, 1" O-C
Masonry/Concrete Substrate:(2) Anchors, 4" O-C
Steel/Aluminum Substrate: (2) Anchors, 1" O-C

HORIZONTAL MULLION ENDS
Wood Substrate: (4) Anchors, 1" O-C
Masonry/Concrete Substrate:(2) Anchors, 4" O-C
Steel/Aluminum Substrate: (2) Anchors, 1" O-C

(SEE INSTALLATION DETAILS ON SHEETS 2, 3 AND 4 FOR EMBEDMENT DEPTH AND EDGE DISTANCE)

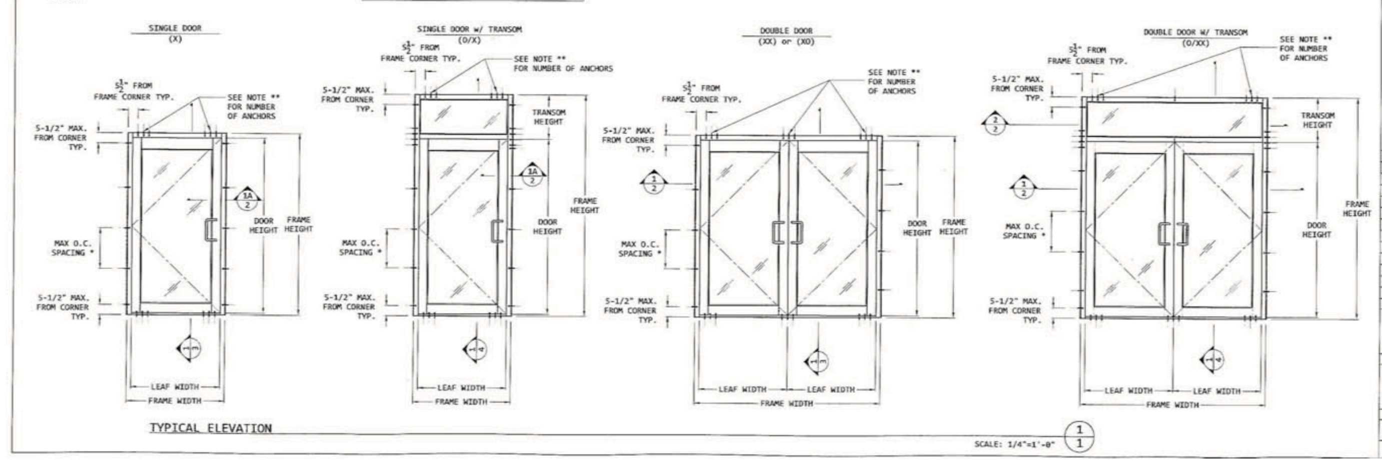

OWNER: YKK AP AMERICA INC, 7680 THE BLUFFS, SUITE 100, AUSTELL, GA 30168
PROJECT: 35H ALUMINUM DOORS
CONSULTANTS: OM ENGINEERING SERVICES, INC., 621 E. WASHINGTON ST. SUITE 8, ORLANDO, FL 32801, (P) 407-704-7815, (F) 407-704-7816, C.A.#26637
PROFESSIONAL ENGINEER: NIMESH BHAVSAR, P.E., REGISTRATION #: 56861
DRAWING SCALE: AS NOTED — DRAWING TITLE: GENERAL NOTES AND ELEVATION — DRAWING NUMBER: 35H-LM — SHEET 01 OF 08

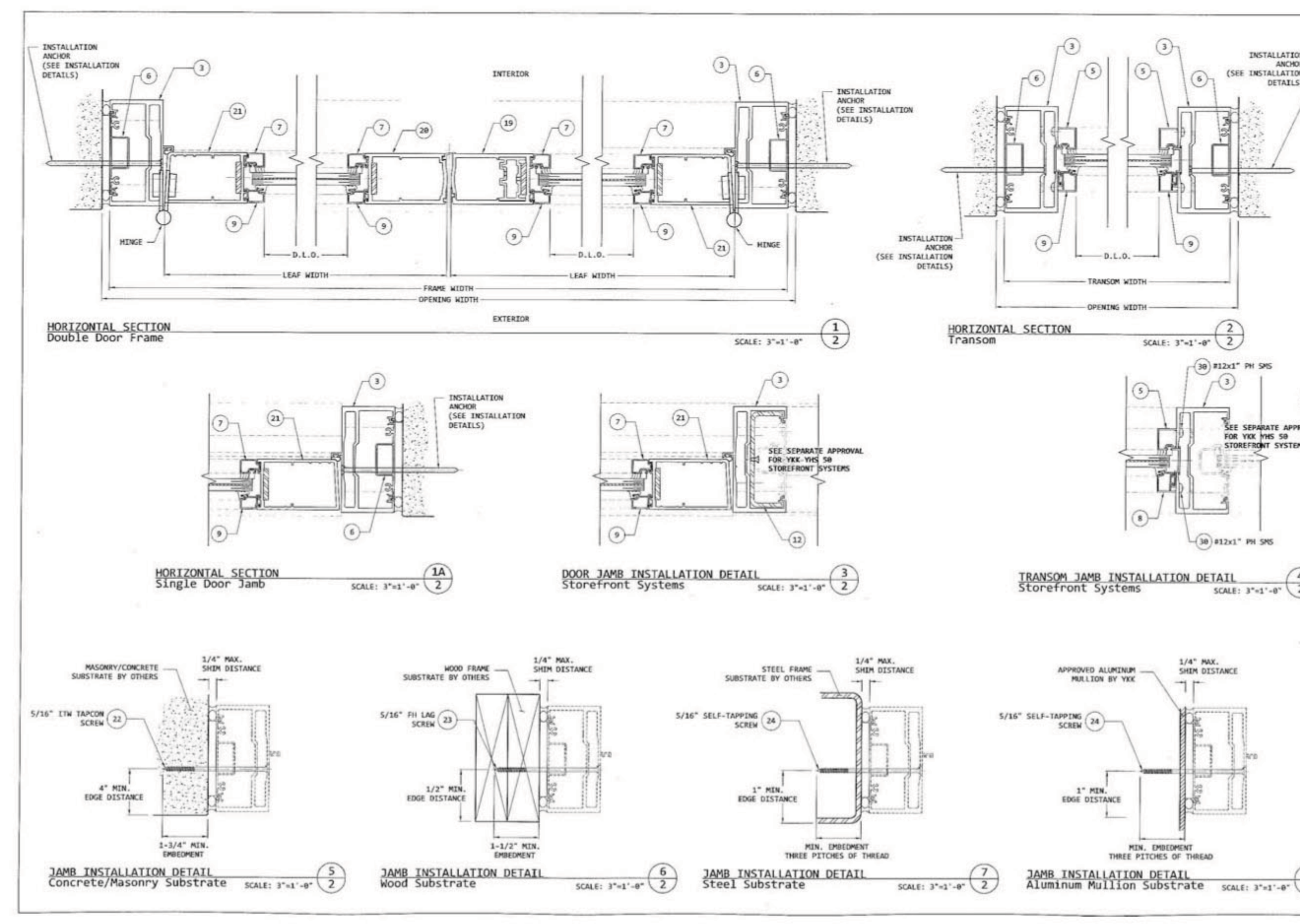

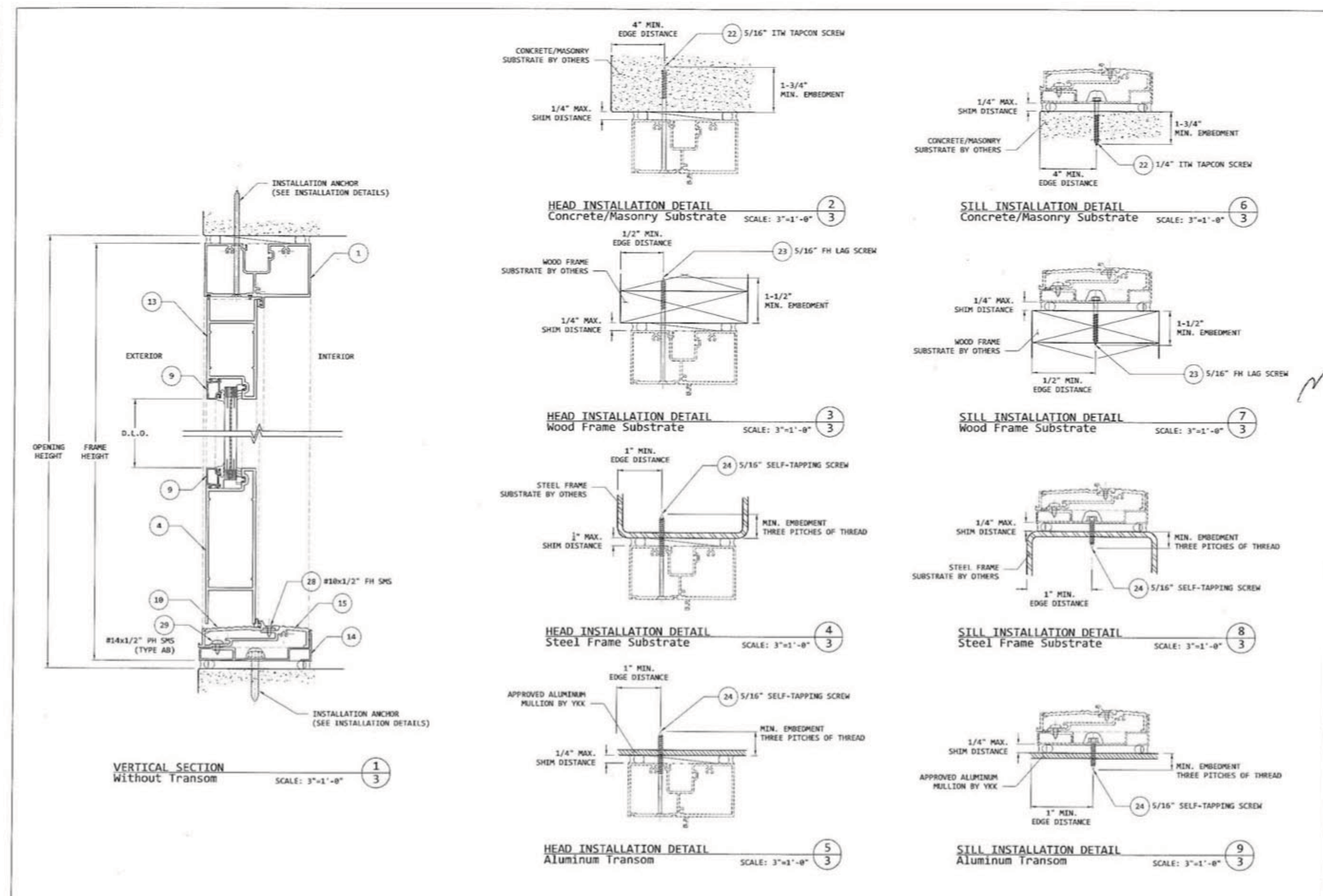

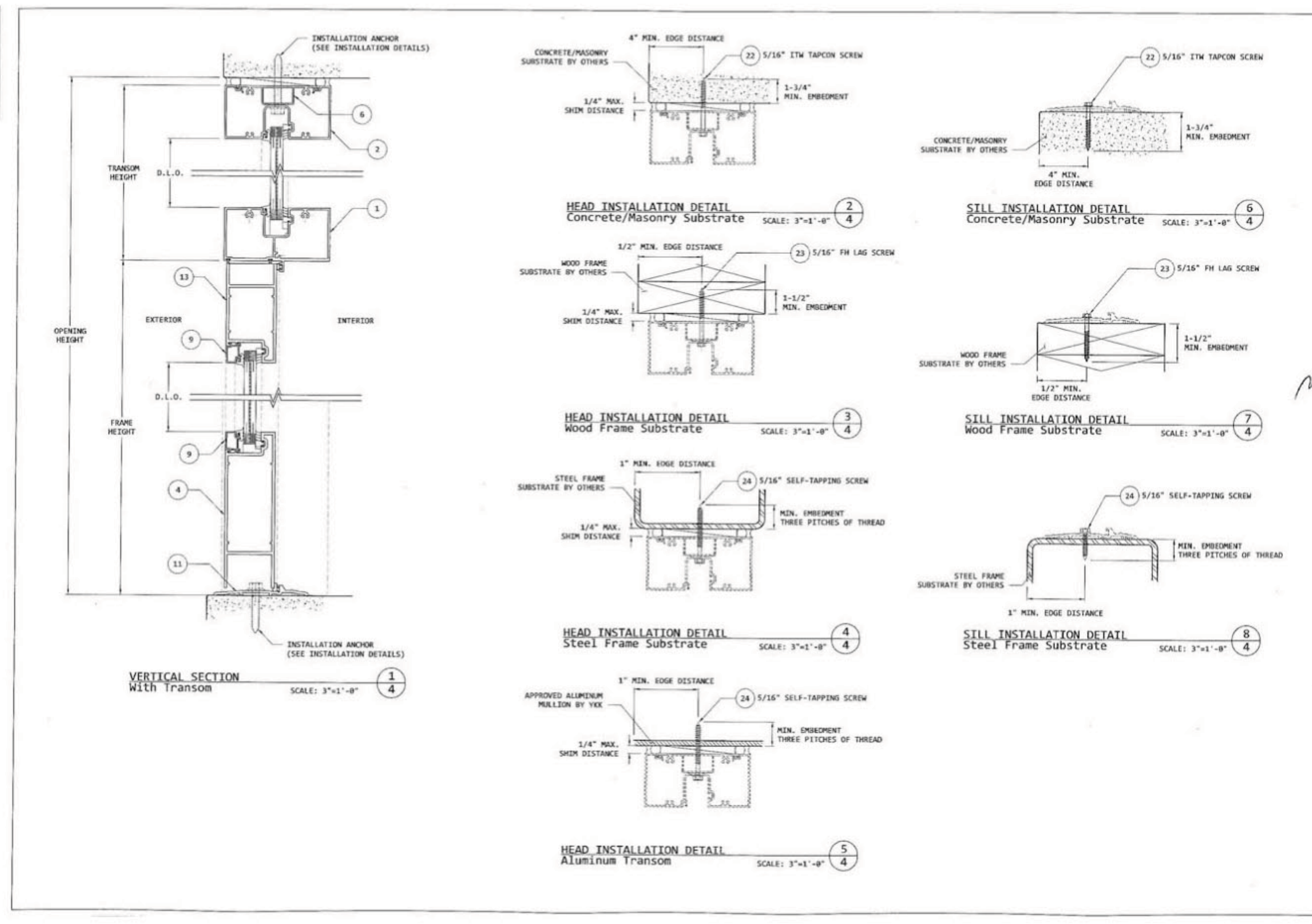

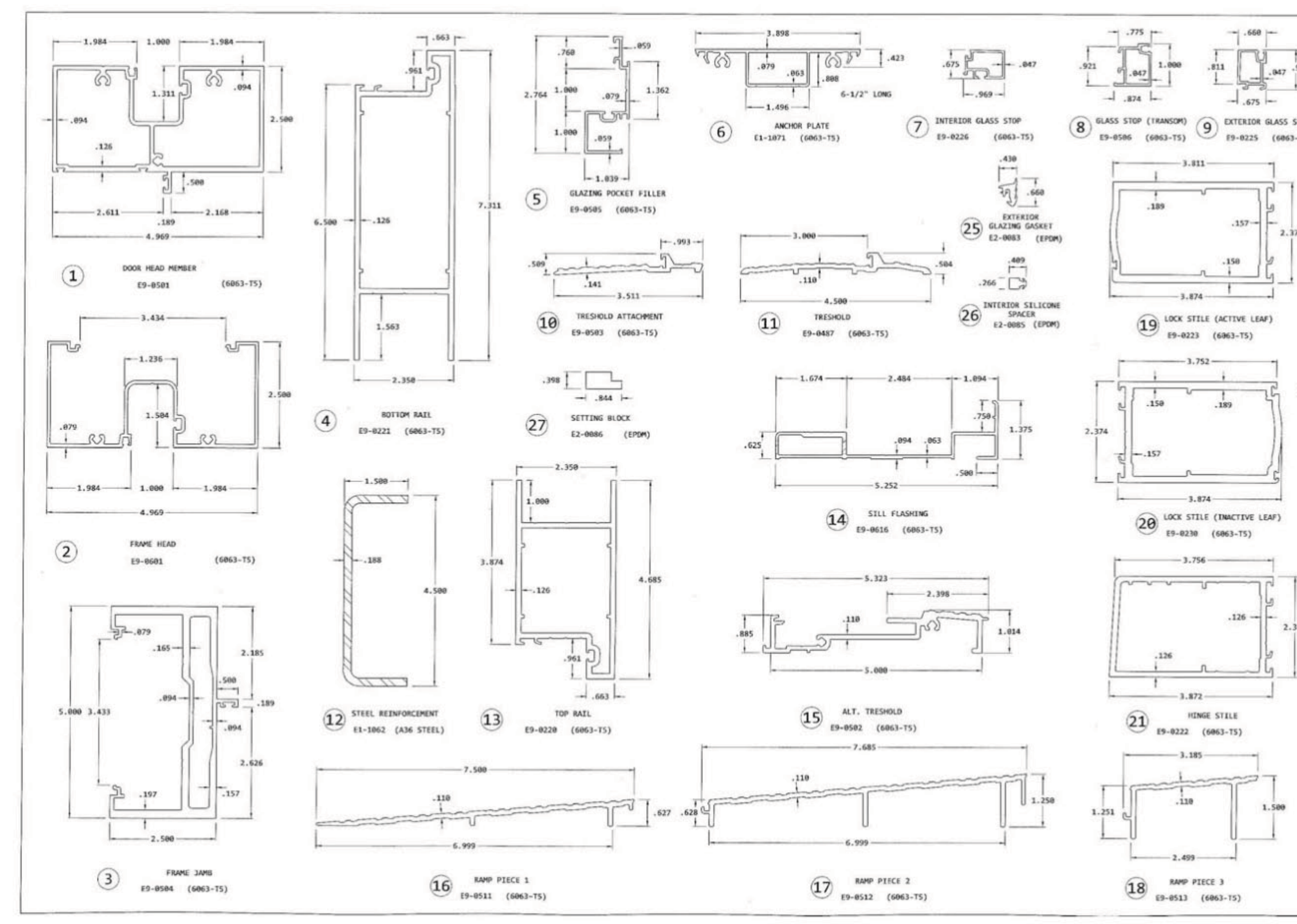

ITEM	PART NO.	BILL OF MATERIALS DESCRIPTION	MATERIAL
1	E9-0501	DOOR HEAD MEMBER	6063-T5
2	E9-0601	FRAME HEAD	6063-T5
3	E9-0504	FRAME JAMB	6063-T5
4	E9-0221	BOTTOM RAIL	6063-T5
5	E9-0505	GLAZING POCKET FILLER	6063-T5
6	E1-1071	ANCHOR PLATE	6063-T5
7	E9-0226	INTERIOR GLASS STOP	6063-T5
8	E9-0506	GLASS STOP (TRANSOM)	6063-T5
9	E9-0225	EXTERIOR GLASS STOP	6063-T5
10	E9-0503	TRESHOLD ATTACHMENT	6063-T5
11	E9-0487	TRESHOLD	6063-T5
12	E1-1062	STEEL REINFORCEMENT	A36 STEEL
13	E9-0220	TOP RAIL	6063-T5
14	E9-0616	SILL FLASHING	6063-T5
15	E9-0502	ALTERNATIVE TRESHOLD	6063-T5
16	E9-0511	RAMP PIECE 1	6063-T5
17	E9-0512	RAMP PIECE 2	6063-T5
18	E9-0513	RAMP PIECE 3	6063-T5
19	E9-0223	LOCK STILE (ACTIVE LEAF)	6063-T5
20	E9-0230	LOCK STILE (INACTIVE LEAF)	6063-T5
21	E9-0222	HINGE STILE	6063-T5
22		5/16" ITW TAPCON SCREW	
23		5/16" FH LAG SCREW	
24		5/16" SELF-TAPPING SCREW	
25	E2-0083	EXTERIOR GLAZING GASKET	EPDM
26	E2-0085	INTERIOR SILICONE SPACER	EPDM
27	E2-0086	SETTING BLOCK	EPDM
28		#10 x 1/2" FH SMS	
29		#14 x 1/2" PH SMS (TYPE AB)	
30		#12 x 1 PH SMS	

LOCK OPTIONS SINGLE DOORS

OPTION #1
3 POINT LOCK (YKK PART #P2150)
WITH LOCK CYLINDER AT 32" TO 42" FROM BOTTOM
STD. PUSH/PULL BAR AT 45" FROM BOTTOM
PUSH/PULL HANDLE SET (YKK #1113)
OPTION #2
DOR-O-MATIC 1490 SERIES (YKK #P2362)
CONCEALED VERTICAL ROD TOUCH BAR EXIT DEVICE
WITH KEY CYLINDER AT 42" FROM BOTTOM
EXIT DEVICE PULL HANDLE SET (YKK #H1510)
NOTE: THE STRIKE SHIMMED IN A MANNER THAT PROVIDES A MINIMUM 9/16" ENGAGEMENT

LOCK OPTIONS DOUBLE DOORS

OPTION #1
ACTIVE LEAF: 3 POINT LOCK (YKK #P2150) WITH LOCK CYLINDER AT 32" TO 42" FROM BOTTOM STD. PUSH/PULL BAR AT 45" FROM BOTTOM
INACTIVE LEAF: 2 POINT LOCK SYSTEM (YKK #P2151) WITH THUMB TURN AT 32" TO 42" FROM BOTTOM STD. PUSH/PULL BAR AT 45" FROM BOTTOM PUSH/PULL HANDLE SET (YKK #1113)

OPTION #2
ACTIVE LEAF: DOR-O-MATIC 1490 SERIES (YKK #P2362) CONCEALED VERTICAL ROD TOUCH BAR EXIT DEVICE WITH KEY CYLINDER AT 42" FROM BOTTOM EXIT DEVICE PULL HANDLE SET (YKK #H1510)
INACTIVE LEAF: DOR-O-MATIC 1490 SERIES (YKK #P2362) CONCEALED VERTICAL ROD TOUCH BAR EXIT DEVICE WITH KEY CYLINDER AT 42" FROM BOTTOM EXIT DEVICE PULL HANDLE SET (YKK #H1510)

FOR ALL OPTIONS (SINGLE AND DOUBLE DOORS):
LOCK FASTENED TO EXTRUDED ALUMINUM BACK-UP PLATE (PART #E9-0231)(2.028" x 1.248" x 0.118" TYPICAL WALL THICKNESS) WITH TWO #10-32 x 2-1/2" PHILIPS FH MS ON ONE SIDE AND WITH TWO #10-32 x 3/4" PHILIPS FH MS ON THE GLASS SIDE.

HINGES

4-1/2" x 4" BRASS BUTT HINGES (YKK #P1300) AT 4" FROM TOP END, 7" FROM BOTTOM END AND ONE OR TWO EQUALLY SPACED.
(3) PER LEAF FOR 90" DOOR HT. AND ≤ 36" LEAF WIDTH.
(4) PER LEAF FOR UP TO 96" DOOR HEIGHT AND UP TO 48" LEAF WIDTH

HINGE ATTACHED TO DOOR FRAME AND DOOR STILE USING (4) #12-24 x 1/2" FH MS THAT PASS THRU DOOR MEMBER AND THREAD INTO 5/16" ALUMINUM BACKUP PLATE.

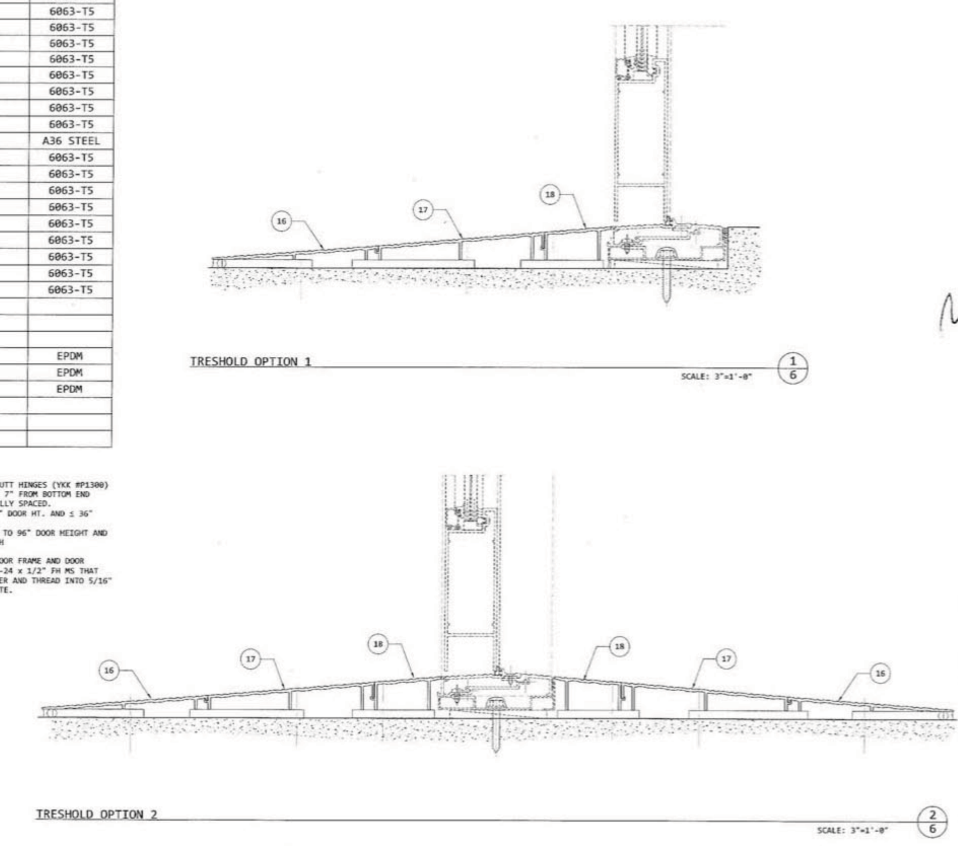

BILL OF MATERIALS — 35H-LM — SHEET 06 OF 08

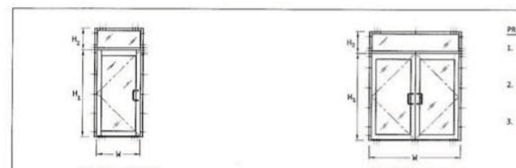

Opening Width, W (in)	Door Height, H_1 (in)	Transom Height, H_2 (in)	Single Door: Positive & Negative Design Pressure (psf)
60	80	24	70.0
		30	70.0
		36	70.0
		40	70.0
	84	24	70.0
		30	70.0
		36	70.0
	90	24	70.0
		30	70.0
	96	24	70.0
72	80	24	70.0
		30	70.0
		36	70.0
		40	70.0
	84	24	70.0
		30	70.0
		36	70.0
	90	24	70.0
		30	70.0
	96	24	70.0
78	80	24	70.0
		30	70.0
		36	70.0
		40	70.0
	84	24	70.0
		30	70.0
		36	70.0
	90	24	70.0
		30	70.0
	96	24	70.0
84	80	24	70.0
		30	70.0
		36	70.0
		40	70.0
	84	24	70.0
		30	70.0
		36	70.0
	90	24	70.0
		30	70.0
	96	24	70.0
90	80	24	70.0
		30	70.0
		36	70.0
		40	70.0
	84	24	70.0
		30	70.0
		36	70.0
	90	24	70.0
		30	70.0
	96	24	70.0
96	80	24	70.0
		30	70.0
		36	70.0
		40	70.0
	84	24	70.0
		30	70.0
		36	70.0
	90	24	70.0
		30	70.0
	96	24	70.0

Opening Width, W (in)	Door Height, H_1 (in)	Transom Height, H_2 (in)	Double Door (with Reinforcement): Positive Design Pressure (psf)	Negative Design Pressure (psf)
60	80	24	70.0	90.0
		30	70.0	90.0
		36	70.0	90.0
		40	70.0	90.0
	84	24	70.0	90.0
		30	70.0	90.0
		36	70.0	90.0
	90	24	70.0	90.0
		30	70.0	90.0
	96	24	70.0	90.0
72	80	24	70.0	90.0
		30	70.0	90.0
		36	70.0	90.0
		40	70.0	90.0
	84	24	70.0	90.0
		30	70.0	90.0
		36	70.0	90.0
	90	24	70.0	90.0
		30	70.0	90.0
	96	24	70.0	90.0
78	80	24	70.0	90.0
		30	70.0	90.0
		36	70.0	90.0
		40	70.0	90.0
	84	24	70.0	90.0
		30	70.0	90.0
		36	70.0	90.0
	90	24	70.0	90.0
		30	70.0	90.0
	96	24	70.0	90.0
84	80	24	70.0	90.0
		30	70.0	90.0
		36	70.0	90.0
		40	70.0	90.0
	84	24	70.0	90.0
		30	70.0	90.0
		36	70.0	90.0
	90	24	70.0	90.0
		30	70.0	90.0
	96	24	70.0	90.0
90	80	24	70.0	90.0
		30	70.0	90.0
		36	70.0	87.5
		40	70.0	84.5
	84	24	70.0	90.0
		30	70.0	90.0
		36	70.0	86.8
	90	24	70.0	90.0
		30	70.0	90.0
	96	24	70.0	90.0
96	80	24	70.0	84.1
		30	70.0	79.0
		36	70.0	74.6
		40	70.0	72.1
	84	24	70.0	83.1
		30	70.0	78.1
		36	70.0	73.8
	90	24	70.0	82.1
		30	70.0	77.2
	96	24	70.0	81.7

PRESSURE CHART NOTES

1. DESIGN PRESSURES ARE LIMITED BY THE MINIMUM OF MULLION, FASTENER AND GLAZING CAPACITY PER ASTM E1300-04.
2. SELECT PANEL WIDTH (W) AND MULLION SPAN (H) IN INCHES AND OBTAIN THE MAXIMUM DESIGN PRESSURE FROM THE CHART.
3. WHEN PANEL WIDTHS ARE NOT EQUAL, USE THE AVERAGE WIDTH ON THE CHART.

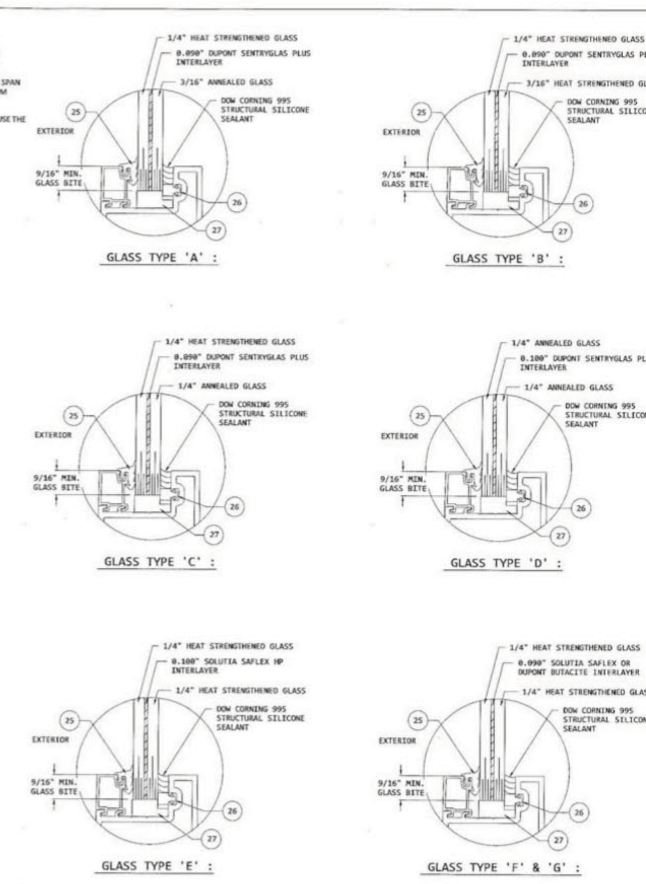

NOTE: ALL GLAZING TYPES EXCEED MAXIMUM DESIGN PRESSURE ACCORDING TO ASTM E1300-04

GLAZING DETAILS AND PRESSURE CHARTS — 35H-LM — SHEET 07 OF 08

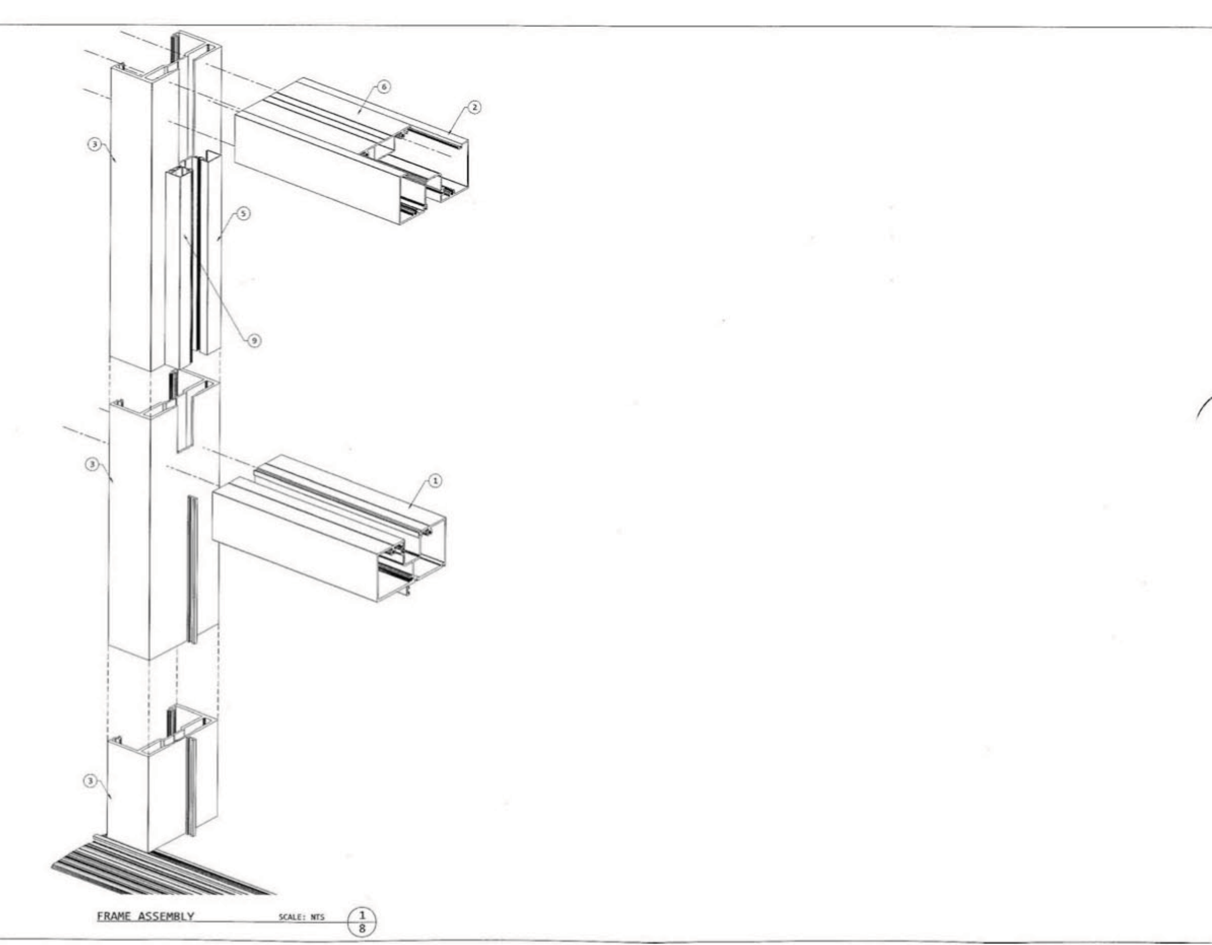

hayes | cumming architects

2210 central ave, suite 100
st. petersburg, fl 33712
ph 727.321.0900
fx 727.321.0903

AA26001260
hc-arc.com

ANDREW M. HAYES
AR0016166

andrew m. hayes, aia, leed bd+c

© Copyright - All Rights Reserved

members of
AIA American Institute of Architects

CONSULTANT:

CLIENT / PROJECT NAME:

CITY OF KEY WEST

RENOVATION TO

FREDERICK DOUGLASS RECREATION CENTER

111 OLIVIA STREET
KEY WEST, FL 33040

BID SET

Original drawing is 24"x36". Scale accordingly if reduced.

SHEET TITLE:

FLORIDA PRODUCT APPROVAL

REVISIONS:

DATE ISSUED: 03/28/2016
PROJECT NO.: 12.0D01

DRAWING NUMBER:

A-805 SHEET: 50 OF 68

9/18/2015 3:05:56 PM

TRINITY | ERD

EXTERIOR RESEARCH & DESIGN, LLC.
Certificate of Authorization #9503
353 Christian Street, Unit 13
Oxford, CT 06478
PHONE: (203) 262-9245
FAX: (203) 262-9243

EVALUATION REPORT

GAF
1361 Alps Road
Wayne, NJ 07470

Evaluation Report 01506.11.05-R13
FL5680-R13
Date of Issuance: 11/07/2005
Revision 13: 08/27/2014

SCOPE:
This Evaluation Report is issued under Rule 61G20-3 and the applicable rules and regulations governing the use of construction materials in the State of Florida. The documentation submitted has been reviewed by Robert Nieminen, P.E. for use of the product under the Florida Building Code. The product described herein has been designed to comply with the 2010 Florida Building Code sections noted herein.

DESCRIPTION: GAF Modified Bitumen Roof Systems

LABELING: Labeling shall be in accordance with the requirements of the Accredited Quality Assurance Agency noted herein.

CONTINUED COMPLIANCE: This Evaluation Report is valid until such time as the named product(s) changes, the referenced Quality Assurance documentation changes, or provisions of the Code that relate to the product change. Acceptance of this Evaluation Report by the named client constitutes agreement to notify Robert Nieminen, P.E. if the product changes or the referenced Quality Assurance documentation changes. Trinity|ERD requires a complete review of this Evaluation Report relative to updated Code requirements with each Code Cycle.

ADVERTISEMENT: The Evaluation Report number preceded by the words "TRINITY|ERD Evaluated" may be displayed in advertising literature. If any portion of the Evaluation Report is displayed, then it shall be done in its entirety.

INSPECTION: Upon request, a copy of this entire Evaluation Report shall be provided to the user by the manufacturer or its distributors and shall be available for inspection at the job site at the request of the Building Official.

This Evaluation Report consists of pages 1 through 6, plus a 73-page Appendix.

Prepared by:

The facsimile seal appearing was authorized by Robert Nieminen, P.E. on 08/27/2014. This does not serve as an electronically signed document. Signed, sealed hardcopies have been transmitted to the Product Approval Administrator and to the named client.

Robert J.M. Nieminen, P.E.
Florida Registration No. 59166, Florida DCA ANE1983

CERTIFICATION OF INDEPENDENCE:
1. Exterior Research & Design, LLC. d/b/a Trinity|ERD does not have, nor does it intend to acquire or will it acquire, a financial interest in any company manufacturing or distributing products it evaluates.
2. Exterior Research & Design, LLC. d/b/a Trinity|ERD is not owned, operated or controlled by any company manufacturing or distributing products it evaluates.
3. Robert Nieminen, P.E. does not have nor will acquire, a financial interest in any company manufacturing or distributing products for which the evaluation reports are being issued.
4. Robert Nieminen, P.E. does not have, nor will acquire, a financial interest in any other entity involved in the approval process of the product.

TRINITY | ERD

ROOFING SYSTEMS EVALUATION:

1. **SCOPE:**
Product Category: Roofing
Sub-Category: Modified Bitumen Roof Systems
Compliance Statement: Modified Bitumen Roof Systems, as produced by GAF, have demonstrated compliance with the following sections of the Florida Building Code through testing in accordance with the following Standards. Compliance is subject to the Installation Requirements and Limitations / Conditions of Use set forth herein.

2. **STANDARDS:**

Section	Property	Standard	Year
1504.3.1	Wind	FM 4474	2004
1515.1.1	Wind	TAS 114	2011
1504.7	Impact	FM 4470	1992
1507.11.2	Physicals	ASTM D6162	2000
1507.11.2	Physicals	ASTM D6163	2000
1507.11.2	Physicals	ASTM D6164	2005
1507.11.2	Physicals	ASTM D6222	2002

3. **REFERENCES:**

Entity	Examination	Reference	Date
[illegible]	[illegible]	[illegible]	[illegible]

Exterior Research and Design, LLC.
Certificate of Authorization #9503
Evaluation Report 01506.11.04-R13
FL5680-R13

TRINITY | ERD

Entity	Examination	Reference	Date
[illegible]	[illegible]	[illegible]	[illegible]

Exterior Research and Design, LLC.
Evaluation Report 01506.11.04-R13

TRINITY | ERD

Entity	Examination	Reference	Date
[illegible]	[illegible]	[illegible]	[illegible]

4. **PRODUCT DESCRIPTION:**
This Evaluation Report covers GAF Modified Bitumen Roof Systems installed in accordance with GAF published installation instructions and the Limitations / Conditions of Use herein. The following products make up the subject systems.

TABLE 1: ROLL-GOODS FOR GAF MODIFIED BITUMEN ROOF SYSTEMS

Type	Product	Specification: Reference	Type	Grade
Base Sheet	GAFGLAS #75 Base Sheet	ASTM D4601	II	N/A
	Tri-Ply #75 Base Sheet	ASTM D4601	II	N/A
	GAFGLAS #80 Ultima Base Sheet	ASTM D4601	II	N/A
	GAFGLAS Stratavent Eliminator Nailable Venting Base Sheet	ASTM D4897	II	N/A
	GAFGLAS Stratavent Eliminator Perforated Venting Base Sheet	ASTM D4897	II	N/A
	Liberty MA Mechanically Attached Base Sheet	Proprietary	N/A	N/A
Ply Sheet	GAFGLAS Ply 4	ASTM D2178	IV	N/A
	Tri-Ply Ply 4	ASTM D2178	IV	N/A
	GAFGLAS FlexPly 6	ASTM D2178	VI	N/A
	GAFGLAS FlexPly 6 SL	ASTM D2178	VI	N/A
	Liberty SBS Self-Adhering Base/Ply Sheet	ASTM D1970	N/A	N/A
	UnderRoof 2 Polyester-Surfaced Leak Barrier	ASTM D1970	N/A	N/A
	UnderRoof HT High Temperature Leak Barrier	ASTM D1970	N/A	N/A
	WeatherWatch XT Mat Surfaced Leak Barrier	ASTM D1970	N/A	N/A
Smooth Surfaced Membranes:	Ruberoid 20	ASTM D6163	I	S
	Ruberoid SBS Heat-Weld 25	ASTM D6163	I	S
	Ruberoid SBS Heat-Weld Smooth	ASTM D6164	I	S
	Ruberoid MOP Smooth	ASTM D6164	I	S
	Ruberoid MOP Smooth 1.5	ASTM D6164	I	S
	Ruberoid MOP Plus Smooth	ASTM D6164	II	S
	Ruberoid TORCH Smooth	ASTM D6222	I	S
	Tri-Ply TP-4	ASTM D6222	I	G

Exterior Research and Design, LLC.
Certificate of Authorization #9503
Evaluation Report 01506.11.04-R13
FL5680-R13

TRINITY | ERD

TABLE 1 (CONTINUED): ROLL-GOODS FOR GAF MODIFIED BITUMEN ROOF SYSTEMS

Type	Product	Specification: Reference	Type	Grade
Granule Surfaced Membranes:	Ruberoid 30	ASTM D6163	I	G
	Ruberoid 30 FR	ASTM D6163	I	G
	Ruberoid EnergyCap 30 FR SBS Membrane	ASTM D6163	I	G
	Ruberoid MOP 170 FR	ASTM D6164	I	G
	Ruberoid MOP Granule	ASTM D6164	I	G
	Intec Flex PRF	ASTM D6164	I	G
	RoofMatch SBS Modified Granular	ASTM D6164	I	G
	Tri-Ply SBS Modified Bitumen Membrane	ASTM D6164	I	G
	Ruberoid SBS Heat-Weld Granule	ASTM D6164	I	G
	Ruberoid SBS Heat-Weld 170 FR	ASTM D6164	I	G
	Ruberoid MOP FR	ASTM D6164	II	G
	Ruberoid MOP Plus	ASTM D6164	II	G
	Ruberoid EnergyCap MOP FR	ASTM D6164	II	G
	Ruberoid SBS Heat-Weld Plus	ASTM D6164	II	G
	Ruberoid SBS Heat-Weld Plus FR	ASTM D6164	II	G
	Ruberoid EnergyCap SBS Heat-Weld Plus FR	ASTM D6164	II	G
	Ruberoid TORCH Granule	ASTM D6222	I	G
	Tri-Ply TP-4G	ASTM D6222	I	G
	Ruberoid TORCH 180	ASTM D6222	I	G
	RoofMatch APP Modified Granular	ASTM D6222	I	G
	Ruberoid TORCH FR	ASTM D6222	II	G
	Ruberoid EnergyCap TORCH Granule FR	ASTM D6222	I	G
	Ruberoid EnergyCap TORCH Plus FR	ASTM D6222	II	G
	Liberty SBS Self-Adhering Cap Sheet	Proprietary	N/A	N/A

5. **LIMITATIONS:**
5.1 This Evaluation Report is not for use in HVHZ jurisdictions.
5.2 Refer to a current Roofing Materials Directory for fire ratings of this product.
5.3 For steel deck installations, foam plastic insulation shall be separated from the building interior in accordance with FBC 2603.4 unless the exceptions stated in FBC 2603.4.1 and 2603.6 apply.
5.4 The roof system evaluation herein pertains to above-deck roof components. Roof decks and structural members shall be in accordance with FBC requirements to the satisfaction of the AHJ. Load resistance of the roof deck shall be documented through proper codified and/or FBC Approval documentation.
5.5 For recover installations, the existing roof shall be examined in accordance with FBC 1510.
5.6 For mechanically attached insulation or membrane or strip-bonded insulation, the maximum design pressure for the selected assembly shall meet or exceed the Zone 1 design pressure determined in accordance with FBC Chapter 16. Zones 2 and 3 shall employ an attachment density designed by a qualified design professional to resist the elevated pressure criteria. Commonly used methods are RAS 117 and FM LPDS 1-29. Assemblies marked with an asterisk* carry the limitations set forth in Section 2.2.1.5.1(a) of FM LPDS 1-29 for Zone 2/3 enhancements.
5.7 For fully-adhered insulation, the maximum design pressure for the selected assembly shall meet or exceed critical design pressure determined in accordance with FBC Chapter 16. No rational analysis is permitted for these systems

Exterior Research and Design, LLC.
Certificate of Authorization #9503
Evaluation Report 01506.11.04-R13
FL5680-R13

TRINITY | ERD

5.8 For mechanically attached insulation or membrane over existing roof decks, fasteners shall be tested in the existing deck for withdrawal resistance. A qualified design professional shall review the data for comparison to the minimum requirements for the system. Testing and analysis shall be in accordance with TAS 105 or ANSI/SPRI FX-1.
5.9 For bonded insulaton or membrane over existing substrates in a re-roof (tear off) or recover installation, the existing deck or existing roof surface shall be examined for compatibility with the adhesive to be installed. If any surface conditions exist that bring system performance into question, field uplift testing in accordance with ASTM E907, FM LPDS 1-52 or TAS 124 shall be conducted on mock-ups of the proposed new roof assembly.
5.10 For bonded insulation or membrane over existing substrates in a recover installation, the existing roof system shall be capable of resisting project design pressures on its own merit to the satisfaction of the AHJ, as documented through field uplift testing in accordance with ASTM E907, FM LPDS 1-52 or TAS 124.
5.11 Metal edge attachment (except gutters), shall be designed and installed for wind loads in accordance with FBC Chapter 16 and tested for resistance in accordance with ANSI/SPRI ES-1 or RAS 111, except the basic wind speed shall be determined from FBC Figure 1609.
5.12 All products in the roof assembly shall have quality assurance audit in accordance with the FBC and F.A.C. Rule 61G20-3.

6. **INSTALLATION:**
6.1 GAF Modified Bitumen Roof Systems shall be installed in accordance with GAF's published installation instructions, subject to the Limitations / Conditions of Use noted herein.
6.2 System attachment requirements for wind load resistance are set forth in Appendix 1. "MDP" = Maximum Design Pressure is the result of testing for wind load resistance based on allowable wind loads, and reflects the ultimate passing pressure divided by 2 (the 2 to 1 margin of safety per FBC 1504.9 has already been applied). Refer to FBC 1609.1.5 for determination of design wind loads.

7. **BUILDING PERMIT REQUIREMENTS:**
As required by the Building Official or Authority Having Jurisdiction in order to properly evaluate the installation of this product.

8. **MANUFACTURING PLANTS:**
Contact the named QA entity for manufacturing facilities covered by F.A.C. Rule 61G20-3 QA requirements.

9. **QUALITY ASSURANCE ENTITY:**
UL, LLC – QUA9625; (847) 664-3281

- THE 73-PAGES THAT FOLLOW FORM PART OF THIS EVALUATION REPORT -

Exterior Research and Design, LLC.
Evaluation Report 01506.11.04-R13

TRINITY | ERD

APPENDIX 1: ATTACHMENT REQUIREMENTS FOR WIND UPLIFT RESISTANCE

Table	Deck	Application	Type	Description	Page
1A	Wood	New, Reroof (Tear-Off)	A-1	Bonded Insulation, Bonded Roof Cover	4
1B-1	Wood	New, Reroof (Tear-Off)	A-2	Mech. Attached Anchor Sheet, Bonded Insulation, Bonded Roof Cover	4-5
1B-2	Wood	New, Reroof (Tear-Off), Recover	A-2	Mech. Attached Anchor Sheet, Bonded Insulation, Bonded Roof Cover	6
1C	Wood	New, Reroof (Tear-Off), Recover	B	Mech. Attached Base Insulation, Bonded Top Insulation, Bonded Roof Cover	7
1D	Wood	New, Reroof (Tear-Off), Recover	C	Mech. Attached Insulation, Bonded Roof Cover	7
1E	Wood	New, Reroof (Tear-Off), Recover	D	Insulated, Mech. Attached Base Sheet, Bonded Roof Cover	8
1F-1	Wood	New, Reroof (Tear-Off)	E	Non-Insulated, Mech. Attached Base Sheet, Bonded Roof Cover	8-9
1F-2	Wood	New, Reroof (Tear-Off), Recover	E	Non-Insulated, Mech. Attached Base Sheet, Bonded Roof Cover	10
2A-1	Steel or Conc.	New, Reroof (Tear-Off), Recover	B-1	Mech. Attached Base Insulation, Bonded Top Insulation, Bonded Roof Cover	11-17
2A-2	Steel or Conc.	New, Reroof (Tear-Off), Recover	B-2	Mech. Attached Thermal Barrier, Bonded Temp Roof, Bonded Insulation, Bonded Roof Cover	18
2B-1A	Steel or Conc.	New, Reroof (Tear-Off), Recover	C-1	Mech. Attached Insulation, Bonded Roof Cover	19-28
2B-1B	Steel or Conc.	New, Reroof (Tear-Off), Recover	C-1A	Thermal Barrier with Vapor Barrier, Mech. Attached Insulation, Bonded Roof Cover	29
2B-2	Steel or Conc.	New, Reroof (Tear-Off), Recover	C-2	Bonded and Mech. Attached Insulation, Bonded Roof Cover	29
2C	Steel or Conc.	New, Reroof (Tear-Off), Recover	D	Insulated, Mech. Attached Base Sheet, Bonded Roof Cover	30-33
3A-1	Concrete	New, Reroof (Tear-Off)	A-1	Bonded Insulation, Bonded Roof Cover (Base Insulation Layer Only)	34-36
3A-2	Concrete	New, Reroof (Tear-Off)	A-1	Bonded Insulation, Bonded Roof Cover (Base and Top Insulation Layers)	37-46
3A-3	Concrete	New, Reroof (Tear-Off)	A-1a	Bonded Temp Roof, Bonded Insulation, Bonded Roof Cover	47-49
3B	Concrete	New, Reroof (Tear-Off)	F	Non-Insulated, Bonded Roof Cover	50
4A	LWIC	New, Reroof (Tear-Off)	A-1	Bonded Insulation, Bonded Roof Cover	51-52
4B	LWIC	New, Reroof (Tear-Off)	E	Non-Insulated, Mech. Attached Base Sheet, Bonded Roof Cover	53-55
4C	LWIC	New, Reroof (Tear-Off)	F	Non-Insulated, Bonded Roof Cover	55
5A	CWF	New, Reroof (Tear-Off)	A-1	Bonded Insulation, Bonded Roof Cover	56
5B	CWF	New, Reroof (Tear-Off)	A-2	Mech. Attached Anchor Sheet, Bonded Insulation, Bonded Roof Cover	57
5C	CWF	New, Reroof (Tear-Off)	E	Non-Insulated, Mech. Attached Base Sheet, Bonded Roof Cover	58
6A	Gypsum	Reroof (Tear-Off)	A-1	Bonded Insulation, Bonded Roof Cover	59
6B	Gypsum	Reroof (Tear-Off)	A-2	Mech. Attached Anchor Sheet, Bonded Insulation, Bonded Roof Cover	59
6C	Gypsum	Reroof (Tear-Off)	C	Mech. Attached Insulation, Bonded Roof Cover	60
6D	Gypsum	Reroof (Tear-Off)	E	Non-Insulated, Mech. Attached Base Sheet, Bonded Roof Cover	60-61
7A-1	Various	Recover	A-1	Bonded Insulation, Bonded Roof Cover (Base Insulation Layer Only)	62-66
7A-2	Various	Recover	A-1	Bonded Insulation, Bonded Roof Cover (Base and Top Insulation Layers)	66-73

Exterior Research and Design, LLC. d/b/a Trinity|ERD
Certificate of Authorization #9503
Prepared by: Robert Nieminen, PE-59166
Evaluation Report 01506.11.04-R13 for FL5680-R13
Revision 13: 08/27/2014
Appendix 1, Page 1 of 73

TRINITY | ERD

The following notes apply to the systems outlined herein:
1. The roof system evaluation herein pertains to above-deck roof components. Roof decks and structural members shall be in accordance with FBC requirements to the satisfaction of the AHJ. Load resistance of the roof deck shall be documented through proper codified and/or FBC Approval documentation.
2. Unless otherwise noted, fasteners and stress plates for insulation or base sheet attachment shall be as follows. Fasteners shall be of sufficient length for the following engagements:
   - Wood: Drill-Tec #12 Fastener or Drill-Tec #14 Fastener with Drill-Tec 3" Standard Steel Plate, Drill-Tec 3" Steel Plate or Drill-Tec Accutrac Plate, Drill-Tec ASAP 3S or Drill-Tec Heavy Duty ASAP Roofing Fastener Assembled with a 3" Metal Plate. Minimum 0.75-inch plywood penetration or minimum 1-inch wood plank embedment.
   - Steel: Drill-Tec #12 Fastener, Drill-Tec #14 Fastener or Drill-Tec XHD Fastener with Drill-Tec 3" Standard Steel Plate, Drill-Tec 3" Steel Plate or Drill-Tec Accutrac Plate; Drill-Tec ASAP 3S; Drill-Tec Heavy Duty ASAP Roofing Fastener Assembled with a 3" Metal Plate; Drill-Tec Extra Heavy Duty ASAP Roofing Fastener - Insulation. Minimum 0.75-inch steel penetration and engage the top flute of the steel deck.
   - Concrete: Drill-Tec #14 Fastener or Drill-Tec CD-10 with Drill-Tec 3" Standard Steel Plate, Drill-Tec 3" Steel Plate or Drill-Tec Accutrac Plate or Drill-Tec Heavy Duty ASAP Roofing Fastener Assembled with a 3" Metal Plate. Minimum 1-inch embedment into pilot hole in accordance with the fastener manufacturer's published installation instructions.
3. Unless otherwise noted, insulation may be any one layer or combination of polyisocyanurate, polystyrene, wood fiberboard, perlite, Dens Deck, Dens Deck Prime, Dens Deck DuraGuard, MonoBoard, TopRock DD, SECUROCK Gypsum-Fiber Roof Board or SECUROCK Glass-Mat Roof Board that meets the QA requirements of F.A.C. Rule 61G20-3 and is documented as meeting FBC 1505.1 and, for foam plastic, FBC 2603.4.1 or 2603.6, when installed with the roof cover. VersaShield® Solo™ Fire-Resistant Slip Sheet may be used as a non-load-bearing, fire-barrier slip-sheet component within any system outlined herein.
4. Minimum 200 psi, minimum 2-inch thick lightweight insulating concrete may be substituted for rigid insulation board for System Type D (mechanically attached base sheet, bonded roof cover), whereby the base sheet fasteners are installed through the LWIC to engage the structural steel or concrete deck. The structural deck shall be of equal or greater configuration to the steel and concrete deck listings. Roof decks and structural members shall be in accordance with FBC requirements to the satisfaction of the AHJ. Load resistance of the roof deck shall be documented through proper codified and/or FBC Approval documentation.
5. Unless otherwise noted, insulation adhesive application rates are as follows. Ribbon or bead width is at the time of application; the ribbons/beads shall expand as noted in the manufacturer's published instructions.
   - Hot asphalt (HA): Full coverage at 25-30 lbs/square
   - OMG OlyBond 500 (OB500): Continuous 0.75-inch wide ribbons, 12-inch o.c. using PaceCart or SpotShot. *Note: OlyBond Classic or OlyBond 500 Green may be used where OlyBond 500 is referenced.*
   - GAF LRF Adhesive M (LRF-M): Continuous 1-inch wide ribbons, 12-inch o.c.
   - ADCO Millennium One-Step Foamable Adhesive (M-OSFA): Continuous 1-inch wide ribbons, 12-inch o.c.
   - GAF 2-Part Roofing Adhesive (GAF 2-Part): Continuous 2.5 to 3-inch wide ribbons, 12-inch o.c. *Note: 3M CR-20 may be used where GAF 2-Part is referenced.*
   - *Note: When multiple layers(s) of insulation and/or coverboard are installed in ribbon-applied adhesive, adhesive ribbons shall be staggered from layer-to-layer a distance of one-half the ribbon spacing.*
   - *Note: The maximum edge distance from the adhesive ribbon to the edge of the insulation board shall be not less than one-half the specified ribbons spacing.*
6. Unless otherwise noted, all insulations are flat stock or taper board of the minimum thickness noted. Tapered polyisocyanurate at the following thickness limitations may be substituted with the following Maximum Design Pressure (MDP) limitations. In no case shall these values be used to 'increase' the MDP listings in the tables; rather if MDP listing below meets or exceeds that listed for a particular system in the tables, then the thinner board listed below may be used as a drop-in for the equivalent thicker material listed in the table.
   - Hot asphalt (HA): MDP -240.0 psf (Min. 0.5-inch thick)
   - OMG OlyBond 500 (OB500): MDP -315.0 psf (Min. 0.5-inch thick EnergyGuard RH or RN)
   - OMG OlyBond 500 (OB500): MDP -485.0 psf (Min. 0.5-inch thick EnergyGuard RA)
   - GAF 2-Part Roofing Adhesive (GAF 2-Part): MDP -117.5 psf (Min. 1.0-inch thick)
7. Bonded polyisocyanurate insulation boards shall be maximum 4 x 4 ft.
8. For mechanically attached components or partially bonded insulation, the maximum design pressure for the selected assembly shall meet or exceed the Zone 1 design pressure determined in accordance with FBC Chapter 16, and Zones 2 and 3 shall employ an attachment density designed by a qualified design professional to resist the elevated pressure criteria. Commonly used methods are RAS 117 and FM LPDS 1-29. Assemblies marked with an asterisk* carry the limitations set forth in Section 2.2.1.5.1(a) of FM LPDS 1-29 for Zone 2/3 enhancements.
9. For fully bonded assemblies, the maximum design pressure for the selected assembly shall meet or exceed critical design pressure determined in accordance with FBC Chapter 16, and no rational analysis is permitted.
10. For mechanically attached components over existing decks, fasteners shall be tested in the existing deck for withdrawal resistance. A qualified design professional shall review the data for comparison to the minimum requirements for the system. Testing and analysis shall be in accordance with TAS 105 or ANSI/SPRI FX-1.
11. For existing substrates in a bonded recover installation, the existing roof surface shall be examined for compatibility and bond performance with the selected adhesive, and the existing roof system shall be capable of resisting project design pressures on its own merit to the satisfaction of the AHJ, as documented through field uplift testing in accordance with ASTM E907, FM LPDS 1-52 or ANSI/SPRI IA-1.

Exterior Research and Design, LLC. d/b/a Trinity|ERD
Certificate of Authorization #9503
Prepared by: Robert Nieminen, PE-59166
Evaluation Report 01506.11.04-R13 for FL5680-R13
Revision 13: 08/27/2014
Appendix 1, Page 2 of 73

TRINITY | ERD

12. For Recover Applications using System Type D, the insulation is optional. Alternatively, min. 0.5-inch EnergyGuard POLYISO INSULATION, EnergyGuard RA, EnergyGuard RH, EnergyGuard RN or EnergyGuard Ultra, EnergyGuard High Density Roof Fiberboard, EnergyGuard RH HD Polyiso Insulation, EnergyGuard HD Polyiso Insulation or EnergyGuard HD Plus Polyiso Insulation or min. 0.25-inch Dens Deck, Dens Deck Prime or SECUROCK Gypsum-Fiber Roof Board or SECUROCK Glass-Mat Roof Board may be used as a separator board prior to base sheet installation. The existing roof system shall be suitable for a recover application. The separator component shall be documented as meeting FBC 1505.1 and, for foam plastic, FBC 2603.4.1 or 2603.6, when installed with the roof cover in Recover applications.
13. Unless otherwise noted, refer to the following references for bonded base, ply or cap sheet applications.

Reference	Layer	Material	Application
BP-AA (Base/ Ply sheets, Asphalt-Applied)	Base:	GAFGLAS #75 Base Sheet, Tri-Ply #75 Base Sheet, GAFGLAS #80 Ultima Base Sheet	Hot asphalt at 25 lbs/square.
	Ply:	One or more plies GAFGLAS Ply 4, Tri-Ply Ply 4, GAFGLAS FlexPly 6, GAFGLAS FlexPly 6 SL	
BP-CA (Base/ Ply sheets, Cold-Applied)	Base:	GAFGLAS #75 Base Sheet, Tri-Ply #75 Base Sheet	Matrix™ 102 SBS Membrane Adhesive *(formerly known as TOPCOAT MATRIX 102 SBS Membrane Adhesive)* at 1.5 gal/sq.
B-LL (Base sheet, Loose-Laid)	Base:	GAFGLAS Stratavent Eliminator Perforated Venting Base Sheet	Loose laid
SBS-AA (SBS, Asphalt-Applied)	Base or Ply:	One or two plies Ruberoid 20, Ruberoid MOP Smooth, Ruberoid MOP Smooth 1.5, Ruberoid MOP Plus Smooth	Hot asphalt at 25 lbs/square.
	Cap:	Ruberoid 30, Ruberoid 30 FR, Ruberoid EnergyCap 30 FR SBS Membrane, Ruberoid MOP Smooth, Ruberoid MOP Smooth 1.5, Ruberoid MOP Plus Smooth, Ruberoid MOP 170 FR, Ruberoid MOP Granule, Tri-Ply SBS Modified Bitumen Membrane, Intec Flex PRF, RoofMatch SBS Modified Granular, Ruberoid MOP FR, Ruberoid MOP Plus, Ruberoid EnergyCap MOP FR	
SBS-CA (SBS, Cold-Applied, Matrix™ 102 SBS Membrane Adhesive)	Base or Ply:	Ruberoid 20	Matrix™ 102 SBS Membrane Adhesive *(formerly known as TOPCOAT MATRIX 102 SBS Membrane Adhesive)* at 1.5 gal/sq.
	Cap:	Ruberoid 30 FR, Ruberoid EnergyCap 30 FR SBS Membrane, Ruberoid MOP 170 FR, Ruberoid MOP FR, Ruberoid EnergyCap MOP FR	
SBS-CA-1 (SBS, Cold-Applied, Matrix™ 101 Premium SBS Membrane Adhesive)	Base:	Ruberoid 20 or Ruberoid MOP Smooth 1.5	Matrix™ 101 Premium SBS Membrane Adhesive *(formerly known as TOPCOAT MATRIX Majorbond Modified Bitumen Membrane Adhesive)* at 1.5 – 2.0 gal/square
	Cap:	Ruberoid 30 FR, Ruberoid EnergyCap 30 FR SBS Membrane, Ruberoid MOP FR, Ruberoid EnergyCap MOP FR	
SBS-TA (SBS, Torch-Applied)	Base or Ply:	One or two plies Ruberoid SBS Heat-Weld 25, Ruberoid SBS Heat-Weld Smooth	Torch applied
	Cap:	Ruberoid SBS Heat-Weld Granule, Ruberoid SBS Heat-Weld 170 FR, Ruberoid SBS Heat-Weld Plus, Ruberoid SBS Heat-Weld Plus FR, Ruberoid EnergyCap SBS Heat-Weld Plus FR	
APP-TA (APP, Torch-Applied)	Base or Ply:	One or two plies Ruberoid TORCH Smooth, Tri-Ply TP-4	
	Cap:	Ruberoid TORCH Granule, Tri-Ply TP-4G, Ruberoid TORCH 180, RoofMatch APP Modified Granular, Ruberoid TORCH FR, Ruberoid EnergyCap APP 250 FR, Ruberoid EnergyCap TORCH Granule FR, Ruberoid EnergyCap TORCH Plus FR	
SBS-SA (self-adhering)	Base or Ply:	Liberty SBS Self-Adhering Base/Ply Sheet	Self-adhered
	Cap	Liberty SBS Self-Adhering Cap Sheet	

14. "MDP" = Maximum Design Pressure is the result of testing for wind load resistance based on allowable wind loads. Refer to FBC 1609.1.5 for determination of design wind loads.

Exterior Research and Design, LLC. d/b/a Trinity|ERD
Certificate of Authorization #9503
Prepared by: Robert Nieminen, PE-59166
Evaluation Report 01506.11.04-R13 for FL5680-R13
Revision 13: 08/27/2014
Appendix 1, Page 3 of 73

TRINITY | ERD

TABLE 1A: WOOD DECKS - NEW CONSTRUCTION OR REROOF (TEAR-OFF)
SYSTEM TYPE A-1: BONDED INSULATION, BONDED ROOF COVER

System No.	Deck (See Note 1)	Base Insulation Layer: Type	Attach	Top Insulation Layer: Type	Attach	Roof Cover: Base	Ply	Cap	MDP (psf)
W-1.	Min. 19/32-inch plywood or OSB at max. 2 ft spans	Min. 1.5-inch EnergyGuard RA, EnergyGuard RH, EnergyGuard RN	GAF 2-Part	Min. 0.5-inch EnergyGuard High Density Roof Fiberboard	GAF 2-Part	BP-AA, SBS-AA	(Optional) One or more BP-AA, SBS-AA, SBS-TA or APP-TA	SBS-AA, SBS-TA or APP-TA	-52.5
W-2.	Min. 19/32-inch plywood or OSB at max. 2 ft o.c. spans	Min. 1.5-inch EnergyGuard RA, EnergyGuard RH, EnergyGuard RN	GAF 2-Part	Min. 0.25-inch Dens Deck, Dens Deck Prime or SECUROCK Gypsum-Fiber Roof Board	GAF 2-Part	BP-AA, SBS-AA, SBS-TA or APP-TA	(Optional) One or more BP-AA, SBS-AA, SBS-TA or APP-TA	SBS-AA, SBS-TA or APP-TA	-52.5
W-3.	Min. 19/32-inch plywood or OSB at max. 2 ft o.c. spans	Min. 1.5-inch EnergyGuard RA, EnergyGuard RH, EnergyGuard RN	GAF 2-Part	Min. 0.25-inch Dens Deck, Dens Deck Prime or SECUROCK Gypsum-Fiber Roof Board	GAF 2-Part	WeatherWatch XT Mat Surfaced Leak Barrier	(Optional) SBS-TA, APP-TA	SBS-TA, APP-TA	-52.5

TABLE 1B-1: WOOD DECKS – NEW CONSTRUCTION OR REROOF (TEAR-OFF)
SYSTEM TYPE A-2: MECHANICALLY ATTACHED ANCHOR SHEET, BONDED INSULATION, BONDED ROOF COVER

System No.	Deck (See Note 1)	Anchor Sheet: Type	Fasteners	Attach	Base Insulation: Type	Attach	Top Insulation: Type	Attach	Roof Cover: Base	Ply	Cap	MDP (psf)
CONVENTIONAL SYSTEMS:												
W-4.	Min. 19/32-inch plywood at max. 2 ft spans	GAFGLAS #75 Base Sheet, Tri-Ply #75 Base Sheet, #80 Ultima Base Sheet, Ply 4, FlexPly 6 or Stratavent Eliminator Nailable Venting Base Sheet, Ruberoid 20, Ruberoid SBS Heat Weld Smooth or SBS Heat Weld 25	32 ga., 1-5/8-inch dia. tin caps with 11 ga. annular ring shank nails	9-inch o.c. at the min. 4-inch lap and 12-inch o.c. in two, equally spaced, staggered center rows	(Optional) Min. 1.5-inch EnergyGuard RA, EnergyGuard RH, EnergyGuard RN or EnergyGuard Ultra	HA	Min. 0.5-inch EnergyGuard High Density Roof Fiberboard or EnergyGuard Perlite Roof Insulation (homogenenous)	HA	BP-AA, SBS-AA	(Optional) BP-AA, SBS-AA, SBS-TA, APP-TA	SBS-AA, SBS-TA, APP-TA	-45.0

Exterior Research and Design, LLC. d/b/a Trinity|ERD
Certificate of Authorization #9503
Prepared by: Robert Nieminen, PE-59166
Evaluation Report 01506.11.04-R13 for FL5680-R13
Revision 13: 08/27/2014
Appendix 1, Page 4 of 73

TRINITY | ERD

TABLE 1B-1: WOOD DECKS – NEW CONSTRUCTION OR REROOF (TEAR-OFF)
SYSTEM TYPE A-2: MECHANICALLY ATTACHED ANCHOR SHEET, BONDED INSULATION, BONDED ROOF COVER

System No.	Deck (See Note 1)	Anchor Sheet: Type	Fasteners	Attach	Base Insulation: Type	Attach	Top Insulation: Type	Attach	Roof Cover: Base	Ply	Cap	MDP (psf)
W-5.	Min. 19/32-inch plywood at max. 2 ft spans	GAFGLAS #75 Base Sheet, Tri-Ply #75 Base Sheet, #80 Ultima Base Sheet, Ply 4, FlexPly 6 or Stratavent Eliminator Nailable Venting Base Sheet, Ruberoid 20, Ruberoid SBS Heat Weld Smooth or SBS Heat Weld 25	32 ga., 1-5/8-inch dia. tin caps with 11 ga. annular ring shank nails	9-inch o.c. at the min. 4-inch lap and 9-inch o.c. in two, equally spaced, staggered center rows	(Optional) Min. 1.5-inch EnergyGuard RA, EnergyGuard RH, EnergyGuard RN or EnergyGuard Ultra	HA	Min. 0.5-inch EnergyGuard High Density Roof Fiberboard or EnergyGuard Perlite Roof Insulation (homogenenous)	HA	BP-AA, SBS-AA	(Optional) BP-AA, SBS-AA, SBS-TA, APP-TA	SBS-AA, SBS-TA, APP-TA	-52.5
W-6.	Min. 19/32-inch plywood at max. 2 ft spans	GAFGLAS #80 Ultima Base Sheet, Ruberoid 20, Ruberoid MOP Smooth, Ruberoid MOP Smooth 1.5	32 ga., 1-5/8-inch dia. tin caps with 11 ga. annular ring shank nails	9-inch o.c. at the min. 2-inch lap and 9-inch o.c. in two, equally spaced, staggered center rows	(Optional) Min. 1.5-inch EnergyGuard RA, EnergyGuard RH, EnergyGuard RN or EnergyGuard Ultra	HA	Min. 0.5-inch EnergyGuard High Density Roof Fiberboard or EnergyGuard Perlite Roof Insulation (homogenenous)	HA	BP-AA, SBS-AA	(Optional) BP-AA, SBS-AA, SBS-TA, APP-TA	SBS-AA, SBS-TA, APP-TA	-60.0
SELF-ADHERING SYSTEMS:												
W-7.	Min. 19/32-inch plywood at max. 2 ft spans	GAFGLAS #75 Base Sheet, Tri-Ply #75 Base Sheet, #80 Ultima Base Sheet, Ply 4, FlexPly 6 or Stratavent Eliminator Nailable Venting Base Sheet	32 ga., 1-5/8-inch dia. tin caps with 11 ga. annular ring shank nails	9-inch o.c. at the min. 4-inch lap and 12-inch o.c. in two, equally spaced, staggered center rows	(Optional) Min. 1.5-inch EnergyGuard RA, EnergyGuard RH, EnergyGuard RN or EnergyGuard Ultra	HA	Min. 0.25-inch Dens Deck Prime or SECUROCK Gypsum-Fiber Roof Board	HA	SBS-SA	(Optional) SBS-SA, SBS-TA or APP-TA	SBS-SA, SBS-TA or APP-TA	-45.0
W-8.	Min. 19/32-inch plywood at max. 2 ft spans	GAFGLAS #75 Base Sheet, Tri-Ply #75 Base Sheet, #80 Ultima Base Sheet, Ply 4, FlexPly 6 or Stratavent Eliminator Nailable Venting Base Sheet	32 ga., 1-5/8-inch dia. tin caps with 11 ga. annular ring shank nails	9-inch o.c. at the min. 2-inch lap and 12-inch o.c. in two, equally spaced, staggered center rows	(Optional) Min. 1.5-inch EnergyGuard RA, EnergyGuard RH, EnergyGuard RN or EnergyGuard Ultra	HA	Min. 0.25-inch Dens Deck Prime or SECUROCK Gypsum-Fiber Roof Board	HA	WeatherWatch XT Mat Surfaced Leak Barrier	(Optional) SBS-TA, APP-TA	SBS-TA, APP-TA	-45.0

Exterior Research and Design, LLC. d/b/a Trinity|ERD
Certificate of Authorization #9503
Prepared by: Robert Nieminen, PE-59166
Evaluation Report 01506.11.04-R13 for FL5680-R13
Revision 13: 08/27/2014
Appendix 1, Page 5 of 73

TRINITY | ERD

TABLE 1B-2: WOOD DECKS – NEW CONSTRUCTION, REROOF (TEAR-OFF) OR RECOVER
SYSTEM TYPE A-2: MECHANICALLY ATTACHED ANCHOR SHEET, BONDED INSULATION, BONDED ROOF COVER

System No.	Deck (See Note 1)	Anchor Sheet: Type	Fasteners	Attach	Base Insulation: Type	Attach	Top Insulation: Type	Attach	Roof Cover: Base	Ply	Cap	MDP (psf)
CONVENTIONAL SYSTEMS:												
W-9.	Min. 19/32-inch plywood at max. 2 ft spans	GAFGLAS #75 Base Sheet, Tri-Ply #75 Base Sheet, #80 Ultima Base Sheet, Ply 4, FlexPly 6 or Stratavent Eliminator Nailable Venting Base Sheet, Ruberoid 20, Ruberoid SBS Heat Weld Smooth or SBS Heat Weld 25	See Note 2	12-inch o.c. at the min. 4-inch lap and 12-inch o.c. in two, equally spaced, staggered center rows	(Optional) Min. 1.5-inch EnergyGuard RA, EnergyGuard RH, EnergyGuard RN or EnergyGuard Ultra	HA	Min. 0.5-inch EnergyGuard High Density Roof Fiberboard or EnergyGuard Perlite Roof Insulation (homogenenous)	HA	BP-AA, SBS-AA	(Optional) BP-AA, SBS-AA, SBS-TA, APP-TA	SBS-AA, SBS-TA, APP-TA	-45.0
W-10.	Min. 19/32-inch plywood at max. 2 ft o.c. spans	GAFGLAS #75 Base Sheet, Tri-Ply #75 Base Sheet, #80 Ultima Base Sheet, Ply 4, FlexPly 6 or Stratavent Eliminator Nailable Venting Base Sheet, Ruberoid 20, Ruberoid SBS Heat Weld Smooth or SBS Heat Weld 25	See Note 2	12-inch o.c. at the min. 2-inch lap and 12-inch o.c. in three, equally spaced, staggered center rows	(Optional) Min. 1.5-inch EnergyGuard RA, EnergyGuard RH, EnergyGuard RN or EnergyGuard Ultra	HA	Min. 0.5-inch EnergyGuard High Density Roof Fiberboard or EnergyGuard Perlite Roof Insulation (homogenenous)	HA	BP-AA, SBS-AA	(Optional) BP-AA, SBS-AA, SBS-TA, APP-TA	SBS-AA, SBS-TA, APP-TA	-60.0
W-11.	Min. 19/32-inch plywood at max. 2 ft spans	GAFGLAS #75 Base Sheet, Tri-Ply #75 Base Sheet, #80 Ultima Base Sheet, Ply 4, FlexPly 6 or Stratavent Eliminator Nailable Venting Base Sheet, Ruberoid 20, Ruberoid SBS Heat Weld Smooth or SBS Heat Weld 25	See Note 2	8-inch o.c. at the min. 2-inch lap and 8-inch o.c. in three, equally spaced, staggered center rows	(Optional) Min. 1.5-inch EnergyGuard RA, EnergyGuard RH, EnergyGuard RN or EnergyGuard Ultra	HA	Min. 0.5-inch EnergyGuard High Density Roof Fiberboard or EnergyGuard Perlite Roof Insulation (homogenenous)	HA	BP-AA, SBS-AA	(Optional) BP-AA, SBS-AA, SBS-TA, APP-TA	SBS-AA, SBS-TA, APP-TA	-75.0

Exterior Research and Design, LLC. d/b/a Trinity|ERD
Certificate of Authorization #9503
Prepared by: Robert Nieminen, PE-59166
Evaluation Report 01506.11.04-R13 for FL5680-R13
Revision 13: 08/27/2014
Appendix 1, Page 6 of 73

TRINITY | ERD

TABLE 1C: WOOD DECKS - NEW CONSTRUCTION, REROOF (TEAR-OFF) OR RECOVER
SYSTEM TYPE B: MECHANICALLY ATTACHED BASE INSULATION, BONDED TOP INSULATION, BONDED ROOF COVER

System No.	Deck (See Note 1)	Base Insulation Layer: Type	Fasteners	Attach	Top Insulation Layer: Type	Attach	Roof Cover: Base	Ply	Cap	MDP (psf)
W-12.	Min. 19/32-inch plywood at max. 2 ft spans	Min. 1-inch EnergyGuard RN	Drill-Tec #12 Fastener with Drill-Tec AccuTrac Plates	1 per 1.78 ft2	Min. 0.25-inch SECUROCK Gypsum-Fiber Roof Board	OB500	SBS-SA	(Optional) SBS-TA, APP-TA	SBS-TA, APP-TA	-52.5
W-13.	Min. 19/32-inch plywood at max. 2 ft spans	Min. 1-inch EnergyGuard RN	Drill-Tec #12 Fastener with Drill-Tec AccuTrac Plates	1 per 1.78 ft2	Min. 0.25-inch SECUROCK Gypsum-Fiber Roof Board	OB500	WeatherWatch XT Mat Surfaced Leak Barrier	(Optional) SBS-TA, APP-TA	SBS-TA, APP-TA	-52.5

TABLE 1D: WOOD DECKS - NEW CONSTRUCTION, REROOF (TEAR-OFF) OR RECOVER
SYSTEM TYPE C: MECHANICALLY ATTACHED INSULATION, BONDED ROOF COVER

System No.	Deck (See Note 1)	Base Insulation Layer	Top Insulation Layer: Type	Fasteners	Attach	Roof Cover: Base	Ply	Cap	MDP (psf)
CONVENTIONAL SYSTEMS:									
W-14.	Min. 19/32-inch plywood at max. 2 ft spans	Min. 0.75-inch, one or more layers, any combination, loose laid	Min. 1.5-inch EnergyGuard Composite or EnergyGuard RA Composite	See Note 2	1 per 3 ft2	BP-AA, SBS-AA	(Optional) BP-AA, SBS-AA, SBS-TA, APP-TA	SBS-AA, SBS-TA, APP-TA	-45.0
W-15.	Min. 19/32-inch plywood at max. 2 ft spans	Min. 0.75-inch, one or more layers, any combination, loose laid	Min. 1-inch EnergyGuard High Density Roof Fiberboard or min. 0.75-inch EnergyGuard Perlite Roof Insulation (homogeneous)	See Note 2	1 per 2 ft2	BP-AA, SBS-AA	(Optional) BP-AA, SBS-AA, SBS-TA, APP-TA	SBS-AA, SBS-TA, APP-TA	-45.0
SELF-ADHERING SYSTEMS:									
W-16.	Min. 15/32-inch plywood at max. 2 ft spans	(Optional) One or more layers, any combination, loose laid	Min. 1.5-inch EnergyGuard RA, EnergyGuard RH, EnergyGuard RN	See Note 2 (HD Fasteners only)	1 per 2 ft2	SBS-SA	(Optional) SBS-SA	SBS-SA	-45.0
W-17.	Min. 15/32-inch plywood at max. 2 ft spans	(Optional) One or more layers, any combination, loose laid	Min. 0.5-inch Dens Deck DuraGuard	See Note 2 (HD Fasteners only)	1 per 2 ft2	SBS-SA	(Optional) SBS-SA	SBS-SA	-52.5

Exterior Research and Design, LLC. d/b/a Trinity|ERD
Certificate of Authorization #9503
Prepared by: Robert Nieminen, PE-59166
Evaluation Report 01506.11.04-R13 for FL5680-R13
Revision 13: 08/27/2014
Appendix 1, Page 7 of 73

TRINITY | ERD

TABLE 1E: WOOD DECKS – NEW CONSTRUCTION, REROOF (TEAR-OFF) OR RECOVER
SYSTEM TYPE D: INSULATED, MECHANICALLY ATTACHED BASE SHEET, BONDED ROOF COVER

System No.	Deck (See Note 1)	Insulation Layer(s): Type	Attach	Base or Anchor Sheet: Base	Fasteners	Attach	Roof Cover: Ply	Cap	MDP (psf)
CONVENTIONAL SYSTEMS:									
W-18.	Min. 19/32-inch plywood at max. 2 ft spans	Min. 1-inch, one or more layers, any combination	Prelim attach	GAFGLAS #75 Base Sheet, Tri-Ply #75 Base Sheet, #80 Ultima Base Sheet, Stratavent Eliminator Nailable Venting Base Sheet, Ruberoid 20	See Note 2	12-inch o.c. at min. 2-inch laps and 12-inch o.c. in two, equally spaced, staggered center rows	BP-AA, SBS-AA	SBS-AA, SBS-TA, SBS-CA, APP-TA	-45.0
W-19.	Min. 19/32-inch plywood at max. 2 ft spans	Min. 1-inch, one or more layers, any combination	Prelim attach	GAFGLAS #75 Base Sheet, Tri-Ply #75 Base Sheet, #80 Ultima Base Sheet, Stratavent Eliminator Nailable Venting Base Sheet, Ruberoid 20	See Note 2	12-inch o.c. at min. 2-inch laps and 12-inch o.c. in three, equally spaced, staggered center rows	BP-AA, SBS-AA	SBS-AA, SBS-TA, SBS-CA, APP-TA	-60.0
W-20.	Min. 19/32-inch plywood at max. 2 ft spans	Min. 1-inch, one or more layers, any combination	Prelim attach	GAFGLAS #75 Base Sheet, Tri-Ply #75 Base Sheet, #80 Ultima Base Sheet, Stratavent Eliminator Nailable Venting Base Sheet, Ruberoid 20	See Note 2	8-inch o.c. at min. 2-inch laps and 8-inch o.c. in three, equally spaced, staggered center rows	BP-AA, SBS-AA	SBS-AA, SBS-TA, SBS-CA, APP-TA	-75.0

TABLE 1F-1: WOOD DECKS - NEW CONSTRUCTION OR REROOF (TEAR-OFF)
SYSTEM TYPE E: NON-INSULATED, MECHANICALY FASTEDED BASE SHEET, BONDED ROOF COVER

System No.	Deck (See Note 1)	Base Sheet: Type	Faster	Attachment	Roof Cover: Ply	Cap	MDP (psf)
CONVENTIONAL SYSTEMS:							
W-21.	Min. 19/32-inch plywood at max. 2 ft spans	GAFGLAS #80 Ultima Base Sheet; Ruberoid 20	32 ga., 1-5/8-inch dia. tin caps with 12 ga. annular ring shank nails	9-inch o.c. at min. 4-inch laps and 9-inch o.c. at two, equally spaced, staggered center rows	(Optional) BP-AA, SBS-AA	SBS-AA	-45.0
W-22.	Min. 19/32-inch plywood at max. 2 ft spans	GAFGLAS #75 Base Sheet, Tri-Ply #75 Base Sheet, #80 Ultima Base Sheet, Ply 4, FlexPly 6 or Stratavent Eliminator Nailable Venting Base Sheet, Ruberoid 20, Ruberoid SBS Heat Weld Smooth or SBS Heat Weld 25	32 ga., 1-5/8-inch dia. tin caps with 11 ga. annular ring shank nails	9-inch o.c. at min. 4-inch laps and 12-inch o.c. in two, equally spaced, staggered center rows	BP-AA, SBS-AA	SBS-AA, SBS-TA, SBS-CA, APP-TA	-45.0
W-23.	Min. 19/32-inch plywood at max. 2 ft spans	GAFGLAS #75 Base Sheet, Tri-Ply #75 Base Sheet, #80 Ultima Base Sheet, Ply 4, FlexPly 6 or Stratavent Eliminator Nailable Venting Base Sheet, Ruberoid 20, Ruberoid SBS Heat Weld Smooth or SBS Heat Weld 25	32 ga., 1-5/8-inch dia. tin caps with 11 ga. annular ring shank nails	9-inch o.c. at min. 4-inch laps and 9-inch o.c. in two, equally spaced, staggered center rows	BP-AA, SBS-AA	SBS-AA, SBS-TA, SBS-CA, APP-TA	-52.5
W-24.	Min. 19/32-inch plywood at max. 2 ft spans	GAFGLAS #80 Ultima Base Sheet, Ruberoid 20, Ruberoid MOP Smooth, Ruberoid MOP Smooth 1.5	32 ga., 1-5/8-inch dia. tin caps with 11 ga. annular ring shank nails	9-inch o.c. at min. 4-inch laps and 9-inch o.c. in two, equally spaced, staggered center rows	(Optional) APP-TA	APP-TA	-60.0

Exterior Research and Design, LLC. d/b/a Trinity|ERD
Certificate of Authorization #9503
Prepared by: Robert Nieminen, PE-59166
Evaluation Report 01506.11.04-R13 for FL5680-R13
Revision 13: 08/27/2014
Appendix 1, Page 8 of 73

TRINITY | ERD

TABLE 1F-1: WOOD DECKS - NEW CONSTRUCTION OR REROOF (TEAR-OFF)
SYSTEM TYPE E: NON-INSULATED, MECHANICALY FASTEDED BASE SHEET, BONDED ROOF COVER

System No.	Deck (See Note 1)	Base Sheet: Type	Faster	Attachment	Roof Cover: Ply	Cap	MDP (psf)
W-25.	Min. 19/32-inch plywood at max. 2 ft spans	GAFGLAS #80 Ultima Base Sheet; Ruberoid 20	32 ga., 1-5/8-inch dia. tin caps with 12 ga. annular ring shank nails	8-inch o.c. at min. 4-inch laps and 8-inch o.c. at three, equally spaced, staggered center rows	(Optional) BP-AA, SBS-AA	SBS-AA	-75.0
W-26.	Min. 19/32-inch plywood at max. 2 ft spans	GAFGLAS #80 Ultima Base Sheet; Ruberoid 20	32 ga., 1-5/8-inch dia. tin caps with 11 ga. annular ring shank nails	7-inch o.c. at min. 4-inch laps and 7-inch o.c. in three, equally spaced, staggered center rows	BP-AA, SBS-AA	SBS-AA, SBS-TA, SBS-CA, APP-TA	-82.5
SELF-ADHERING SYSTEMS:							
W-27.	Min. 19/32-inch plywood at max. 2 ft spans	Liberty MA Mechanically Attached Base Sheet	32 ga., 1-5/8-inch dia. tin caps with 11 ga. annular ring shank nails	9-inch o.c. at min. 4-inch laps and 9-inch o.c. in two, equally spaced, staggered center rows	(Optional) SBS-SA	SBS-SA, SBS-TA or APP-TA	-37.5
W-28.	Min. 15/32-inch plywood at max. 2 ft spans	Liberty MA Mechanically Attached Base Sheet	32 ga., 1-5/8-inch dia. tin caps with 11 ga. annular ring shank nails	8-inch o.c. at min. 3-inch laps and 8-inch o.c. in three, equally spaced, staggered center rows	(Optional) SBS-SA	SBS-SA, SBS-TA or APP-TA	-45.0

Exterior Research and Design, LLC. d/b/a Trinity|ERD
Certificate of Authorization #9503
Prepared by: Robert Nieminen, PE-59166
Evaluation Report 01506.11.04-R13 for FL5680-R13
Revision 13: 08/27/2014
Appendix 1, Page 9 of 73

TRINITY | ERD

TABLE 1F-2: WOOD DECKS - NEW CONSTRUCTION, REROOF (TEAR-OFF) OR RECOVER
SYSTEM TYPE E: NON-INSULATED, MECHANICALY FASTEDED BASE SHEET, BONDED ROOF COVER

System No.	Deck (See Note 1)	Base Sheet: Type	Faster	Attachment	Roof Cover: Ply	Cap	MDP (psf)
CONVENTIONAL SYSTEMS:							
W-29.	Min. 19/32-inch plywood at max. 2 ft spans	GAFGLAS #75 Base Sheet, Tri-Ply #75 Base Sheet, #80 Ultima Base Sheet, Ply 4, FlexPly 6 or Stratavent Eliminator Nailable Venting Base Sheet, Ruberoid 20, Ruberoid SBS Heat Weld Smooth or SBS Heat Weld 25	See Note 2	12-inch o.c. at 2-inch laps and 12-inch o.c. in two, equally spaced, staggered center rows	BP-AA, SBS-AA	SBS-AA, SBS-TA, SBS-CA, APP-TA	-45.0
W-30.	Min. 19/32-inch plywood at max. 2 ft spans	GAFGLAS #75 Base Sheet, Tri-Ply #75 Base Sheet, #80 Ultima Base Sheet, Ply 4, FlexPly 6 or Stratavent Eliminator Nailable Venting Base Sheet, Ruberoid 20, Ruberoid SBS Heat Weld Smooth or SBS Heat Weld 25	See Note 2	12-inch o.c. at 2-inch laps and 12-inch o.c. in three, equally spaced, staggered center rows	BP-AA, SBS-AA	SBS-AA, SBS-TA, SBS-CA, APP-TA	-60.0
W-31.	Min. 19/32-inch plywood at max. 2 ft spans	GAFGLAS #80 Ultima Base Sheet Base, Ruberoid 20, Ruberoid MOP Smooth, Ruberoid MOP Smooth 1.5	See Note 2	9-inch o.c. at 4-inch laps and 9-inch o.c. in two, equally spaced, staggered center rows	(Optional) SBS-TA	SBS-TA (polyester only)	-60.0
W-32.	Min. 19/32-inch plywood at max. 2 ft spans	GAFGLAS #75 Base Sheet, Tri-Ply #75 Base Sheet, #80 Ultima Base Sheet, Ply 4, FlexPly 6 or Stratavent Eliminator Nailable Venting Base Sheet, Ruberoid 20, Ruberoid SBS Heat Weld Smooth or SBS Heat Weld 25	See Note 2	8-inch o.c. at 2-inch laps and 8-inch o.c. in three, equally spaced, staggered center rows	BP-AA, SBS-AA	SBS-AA, SBS-TA, SBS-CA, APP-TA	-75.0
W-33.	Min. 19/32-inch plywood at max. 2 ft spans	GAFGLAS #75 Base Sheet, Tri-Ply #75 Base Sheet, #80 Ultima Base Sheet, Ply 4, FlexPly 6 or Stratavent Eliminator Nailable Venting Base Sheet, Ruberoid 20, Ruberoid SBS Heat Weld Smooth or SBS Heat Weld 25	See Note 2	8-inch o.c. at 2-inch laps and 8-inch o.c. in three, equally spaced, staggered center rows	BP-AA, SBS-AA	SBS-AA, SBS-TA, SBS-CA, APP-TA	-105.0
SELF-ADHERING SYSTEMS:							
W-34.	Min. 19/32-inch plywood at max. 2 ft spans	StormSafe Anchor Sheet	See Note 2 (AccuTrac only)	9-inch o.c. at 4-inch laps and 9-inch o.c. in three, equally spaced, staggered center rows	(Optional) SBS-SA	SBS-SA *Note: Seams sealed with TOPCOAT SB900 or Flexseal*	-60.0
W-35.	Min. 15/32-inch plywood at max. 2 ft spans	Liberty MA Mechanically Attached Base Sheet	See Note 2 (HD Fasteners only)	8-inch o.c. at 3-inch laps and 8-inch o.c. in two, equally spaced, staggered center rows	(Optional) SBS-SA	SBS-SA, SBS-TA or APP-TA	-60.0

Exterior Research and Design, LLC. d/b/a Trinity|ERD
Certificate of Authorization #9503
Prepared by: Robert Nieminen, PE-59166
Evaluation Report 01506.11.04-R13 for FL5680-R13
Revision 13: 08/27/2014
Appendix 1, Page 10 of 73

9/18/2015 3:06:32 PM

hayes | cumming
architects

2210 central ave, suite 100
st. petersburg, fl 33712
ph 727.321.0900
fx 727.321.0903

AA26001260
hc-arc.com

ANDREW M. HAYES
AR0016166

andrew m. hayes, aia, leed bd+c

© Copyright - All Rights Reserved

members of
American Institute of Architects

CONSULTANT:

CLIENT / PROJECT NAME:

CITY OF KEY WEST

RENOVATION TO

FREDERICK DOUGLASS RECREATION CENTER

111 OLIVIA STREET
KEY WEST, FL 33040

BID SET

Original drawing is 24"x36". Scale accordingly if reduced.

SHEET TITLE:
SHEET TITLE:

FLORIDA PRODUCT APPROVAL

REVISIONS:

DATE ISSUED: 03/28/2016
PROJECT NO.: 12.0D01

DRAWING NUMBER:

A-806 SHEET: 51 OF 68

Evaluation Report

"Cee-Lock Panel"
With Continous Cee-Rib Clip
Metal Roof Assembly

Manufacturer:
Berridge Manufacturing Company
1720 Maury Road
Houston, TX 77026
(800) 231-8127
for
Florida Product Approval
 # FL 11269.2 R4
Florida Building Code 5th Edition (2014)

Method:	**1 - D**
Category:	**Roofing**
Sub - Category:	**Metal Roofing**

Product:	Cee-Lock" Roof Panel
Material:	Steel
Panel Thickness:	24 gauge or 22 gauge
Panel Width:	11-3/4" or 16-1/2"
Support:	Steel Deck

Prepared by:
James L. Buckner, P.E., S.E.C.B.
Florida Professional Engineer # 31242
Florida Evaluation ANE ID: 1916
Project Manager: Diana Galloway
Report No. 14-136-CL-SS-ER
(Replaces 14-106-CL-S4,25-ER, fka FL17025.3)
Date: 4 / 02 / 15

2015.04.22 10:25:29 -04'00'

Contents:
Evaluation Report   Pages 1 – 9

CBUCK, Inc.
1399 N. Killian Drive, Suite 4, West Palm Beach, Florida 33403
Phone: (561)491-9927 Fax: (561)491-9928 Website: www.cbuckinc.net

Manufacturer: **Berridge Manufacturing Company**

Product Name: **"Cee-Lock"**

Product Category: Roofing

Product Sub-Category Metal Roofing

Compliance Method: State Product Approval Rule 61G20-3.005 (1) (d)

Product/System Description: "Cee-Lock" Snap-Lock Roof Panel

Product Assembly as Evaluated: Refer to Page 4 of this report for product assembly components/materials & standards:

1. Roof Panel
2. Panel Clip
3. Fasteners
4. Underlayment
5. Insulation

Support: **Type:**
Steel Deck
(Design of support and its attachment to support framing is outside the scope of this evaluation.)

Description:
- 24 gauge (min.) or 22 gauge (min.)
- Yield Strength: 40 ksi minimum

Slope: Minimum slope shall be in compliance with FBC Chapter 15 Section 1507.4.2, applicable code sections and in accordance with manufacturer's recommendations.

Performance: Wind Uplift Resistance:
- Design Uplift Pressure: **Refer to Table A**
  (Refer to "Table A" attachment details herein)

Performance Standards: The product described herein has demonstrated compliance with:
- UL580-06 – *Test for Uplift Resistance of Roof Assemblies*
- UL 1897-04 – *Uplift test for roof covering systems*
- TAS 125-03 – *Standard Requirements for Metal Roofing Systems*

Standards Equivalency: The UL 580-94 & UL 1897-98 standard version used to test the evaluated product assembly is equivalent with the prescribed standards in UL 580-06 & UL 1897-04 adopted by the Florida Building Code 5th Edition (2014).

Code Compliance: The product described herein has demonstrated compliance with Florida Building Code 5th Edition (2014), Section 1504.3.2.

Evaluation Report Scope: This product evaluation is limited to compliance with the structural requirements of the Florida Building Code, as related to the scope section to Florida Product Approval Rule 61G20-3.001.

Limitations and Conditions of Use:
- Scope of "Limitations and Conditions of Use" for this evaluation:
  This evaluation report for "Optional Statewide Approval" contains technical documentation, specifications and installation method(s) which include "Limitations and Conditions of Use" throughout the report in accordance with Rule 61G20-3.005. Per Rule 61G20-3.004, the Florida Building Commission is the authority to approve products under "Optional Statewide Approval".
- Option for application outside "Limitations and Conditions of Use"
  Rule 61G20-3.005(1)(e) allows engineering analysis for "project specific approval by the local authorities having jurisdiction in accordance with the alternate methods and materials authorized in the Code". Any modification of the product as evaluated in this report and approved by the Florida Building Commission is outside the scope of this evaluation and will be the responsibility of others.
- Design of support system is outside the scope of this report.
- Fire Classification is outside the scope of Rule 61G20-3, and is therefore not included in this evaluation.
- This evaluation report does not evaluate the use of this product for use in the High Velocity Hurricane Zone code section. (Dade & Broward Counties)

Quality Assurance: The manufacturer has demonstrated compliance of roof panel products in accordance with the Florida Building Code and Rule 61G20-3.0005 (3) for manufacturing under a quality assurance program audited by an approved quality assurance entity through **UL, LLC.** (FBC Organization #: QUA 9625).

Components/Materials (by Manufacturer):

Roof Panel: Berridge "Cee-Lock"
Material: Steel
Thickness: 24 gauge (min.) or 22 gauge (min.)
Panel Width: 16.5" (max.) or 11-3/4" (max.) Coverage
Rib Height: 1-1/2"
Yield Strength: 40 ksi min.
Steel Grade: 40
Corrosion Resistance: In compliance with FBC Section 1507.4.3:
- ASTM A792 coated, or
- ASTM A653 G90 galvanized steel

Roof Panel Clips: Berridge "Cee-Rib" Clip
Type: One-Piece, fixed continuous clip
Material: Steel
Thickness: 24 Gauge
Dimensions: 1-7/16"(tall) x 1-3/8"(wide) x continuous (w/panel length)
Yield Strength: 40 ksi min.
Corrosion Resistance: Per FBC Section 1506.7

Fastener: **PICK ONE OF THE FOLLOWING:**
FASTENER 1: Low Profile Self-Drilling Screws
Size : #12 x 7" (or length to meet min. penetration)
w/3" steel disk per sheet when used w/insulation
Corrosion Resistance: Per FBC Section 1506.6 and 1507.4.4
Standard: Per SAE J78-1979
FASTENER 2: Low Profile Self-Tapping Screw
Size : #14 – 13 x 7", 9" (or length to meet min. penetration)
w/3" steel disk per sheet when used w/insulation
Corrosion Resistance: Per FBC Section 1506.6 and 1507.4.4
Standard: Per SAE J78-1979

Components& Materials: (by Others)

Underlayment:
Material and application shall be in compliance with FBC Section 1507.4.5.1 and 1507.4.5.2, applicable codes and in accordance with manufacturer's recommendations.

Insulation (Optional with 16-1/2" panels):
Type: Rigid Insulation Board
Thickness: 4"(max.) 16-1/2" panels, 4"–6"(max.) 11-3/4" panels
Properties:
Density: 2.25 pcf (lbs/ft³) min.
Or Compressive Strength: 20 psi min.

Insulation Notes:
- Rigid Insulation shall meet minimum density OR compressive strength.
- **Insulation shall comply with FBC Section 1508. When insulation is incorporated, fastener length shall conform to penetrate thru bottom of support a minimum of 1/2".**

Installation: **Installation Method:**
(Refer to **"TABLE A"** below and drawings at the end of this report.)
- Fastener Spacing Along Continuous Clip:
  Refer to "TABLE A" Below (along the length of the panel)
- **# fasteners per attachment point: 1**
- Rib Interlock: Snap-Lock
  (Panel ribs shall be fully engaged to form an integral snap-lock.)
- Assemblies with insulation include 3" steel disk per sheet.
- Minimum fastener penetration thru bottom of support, 1/2".
  (through bottom flute of steel deck)
- For panel construction at the end of panels, refer to manufacturer's instructions and any site specific design.

TABLE "A"
ALLOWABLE LOADS

	Panel Thickness	Deck Thickness	Max. Panel Width	Insulation (w/3" disk)	Fastener	Clip Fastener Spacing	**Design Pressure**
1	24 ga. (min.) or 22 ga.)	24 ga. (min.) or 22 ga.	11-3/4"	4"–6"	#14	16"	**- 123.5**
2	24 ga. (min.) or 22 ga.)	24 ga. (min.) or 22 ga.	11-3/4"	4"–6"	#14	8"	**- 197.65**
3	24 ga. (min.) or 22 ga.)	24 ga. (min.) or 22 ga.	16-1/2"	4" (max.) Optional	#12 or #14	18"	**- 82.5**
4	24 ga. (min.) or 22 ga.	22 ga. (min.)	16-1/2"	4"–6"	#12 or #14	16"	**- 131**
5	22 ga. (min.)	22 ga. (min.)	16-1/2"	4" (max.) Optional	#14	8"	**- 183.5**

- Allowable design pressure(s) for allowable stress design (ASD).

Install the "Cee-Lock" roof panel assembly in compliance with the installation method listed in this report and applicable code sections of FBC 5th Edition (2014). The installation method described herein is in accordance with the scope of this evaluation report. Refer to manufacturer's installation instructions as a supplemental guide for attachment.

Referenced Data:

1. Uplift Test (Per UL580-94 and UL 1897-98)
   By Force Engineering & Testing Inc., Inc.
   (FBC Organization #TST ID: 5328)
   - Report # 49-0030T-02, Report Date: 11/27/02
   - Report # 49-0091T-02, Report Date: 8/18/08
   (Revision of Report # 49-0030T-02)
2. TAS 125-03 Uplift Test
   By Force Engineering & Testing Inc. (FBC Organization ID# TST 5328)
   Report # 49-0160T-10A, Dated 7/29/09
3. TAS 125-03 Uplift Test
   Force Engineering & Testing Inc. (FBC Organization ID# TST 5328)
   Report # 49-0374T-08A & B, Dated 2/2/09
4. TAS 125-03 Uplift Test
   By Force Engineering & Testing Inc. (FBC Organization ID# TST 5328)
   Report # 49-0188T-13A-C, Dated 10/9/13
5. Quality Assurance
   UL, LLC (FBC Organization #: QUA 9625)
6. Equivalency of Test Standard Certification
   By James L. Buckner, P.E. @ CBUCK Engineering
   (FBC Organization # ANE 1916)
7. Certification of Independence
   By James L. Buckner, P.E. @ CBUCK Engineering
   (FBC Organization # ANE 1916)

Installation Method
Berridge Manufacturing Company
"Cee-Lock" Steel Roof Panel attached to Steel Deck

Drawings

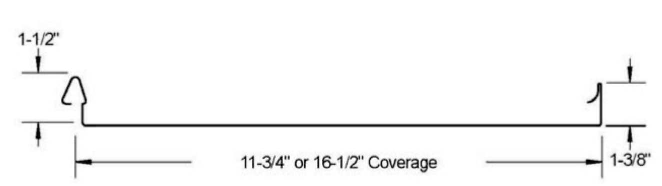

Typical Panel Profile

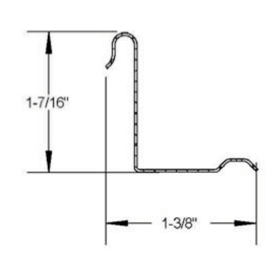

Berridge "Cee-Clip" and Continuous "Cee-Rib"
Panel Clip Profile Side View

Installation Method
Berridge Manufacturing Company
"Cee-Lock" Steel Roof Panel attached to Steel Deck

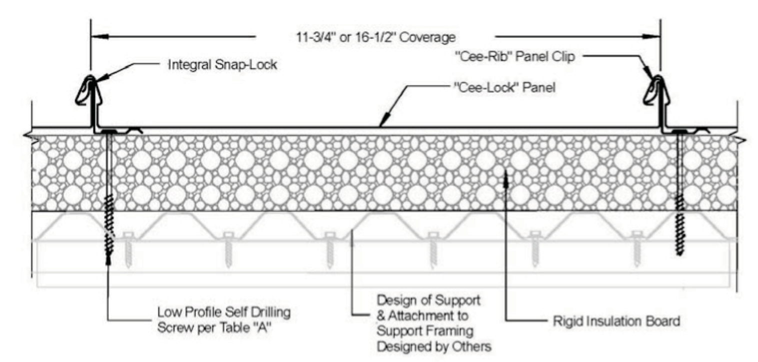

Typical Assembly Profile View
(Typical Fastening Pattern Across Width)

Installation Method
Berridge Manufacturing Company
"Cee-Lock" Steel Roof Panel attached to Steel Deck

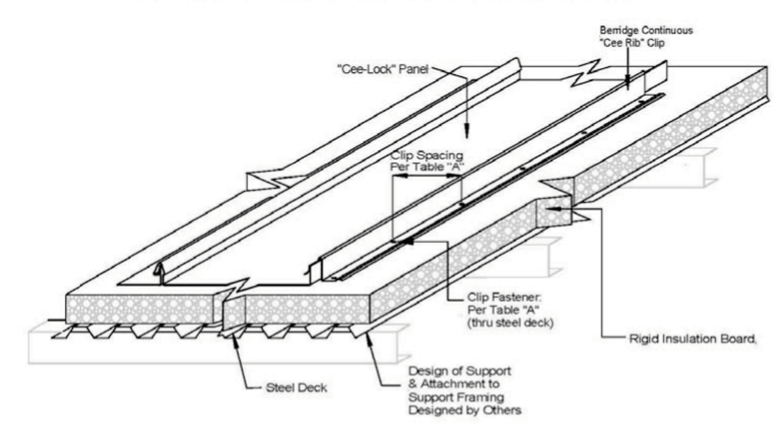

Typical Roof Assembly
Isometric View

TABLE "A"
ALLOWABLE LOADS

	Panel Thickness	Deck Thickness	Max. Panel Width	Insulation (w/3" disk)	Fastener	Clip Fastener Spaci ng	**Design Pressure**
1	24 ga. (min.) or 22 ga.)	24 ga. (min.) or 22 ga.	11-3/4"	4"–6"	#14	16"	**- 123.5**
2	24 ga. (min.) or 22 ga.)	24 ga. (min.) or 22 ga.	11-3/4"	4"–6"	#14	8"	**- 197.65**
3	24 ga. (min.) or 22 ga.)	24 ga. (min.) or 22 ga.	16-1/2"	4" (max.) Optional	#12 or #14	18"	**- 82.5**
4	24 ga. (min.) or 22 ga.	22 ga. (min.)	16-1/2"	4"–6"	#12 or #14	16"	**- 131**
5	22 ga. (min.)	22 ga. (min.)	16-1/2"	4" (max.) Optional	#14	8"	**- 183.5**

hayes | cumming
architects

2210 central ave, suite 100
st. petersburg, fl 33712
ph 727.321.0900
fx 727.321.0903

AA26001260
hc-arc.com

ANDREW M. HAYES
AR0016166

andrew m. hayes, aia, leed bd+c
© Copyright - All Rights Reserved

members of
American Institute of Architects

CONSULTANT:

CLIENT / PROJECT NAME:

CITY OF KEY WEST
RENOVATION TO

FREDERICK DOUGLASS
RECREATION CENTER

111 OLIVIA STREET
KEY WEST, FL 33040

BID SET

Original drawing is 24"x36". Scale accordingly if reduced.

SHEET TITLE:
SHEET TITLE:

FLORIDA PRODUCT APPROVAL

REVISIONS:

DATE ISSUED: 03/28/2016
PROJECT NO.: 12.0D01

DRAWING NUMBER:

A-807   SHEET: 52 OF 68

9/18/2015 3:12:33 PM

PLUMBING LEGEND

DESCRIPTION	ABBREV.	SYMBOL
SANITARY PIPING	SAN	
VENT PIPING	V	
COLD WATER PIPING	CW	
HOT WATER PIPING	HW	
EXISTING PIPING TO REMAIN		
VENT THRU ROOF	VTR	
WALL CLEAN OUT	W/CO	
FLOOR DRAIN	FD	
TRAP PRIMER	TP	
BALL VALVE	BV	
NEW CONNECTION		

PLUMBING ACCESSORY SCHEDULE

MARK	FIXTURE	DESCRIPTION	APPROVED MANUFACTURERS
FD-1	FLOOR DRAIN	**FLOOR DRAIN:** CAST IRON FLOOR DRAIN WITH INTREGRAL DEEP DRUM TYPE P-TRAP WITH DOUBLE DRAINAGE FLANGE, NO HUB SPIGOT SIDE OUTLET, WEEPHOLES, BRONZE INTEGRAL FLUSH-FLOOR CLEANOUT AND THREADED TO RECEIVE A JOSAM ADJUSTABLE STRAINER.	**JOSAM** NO. 30502
W/CO	WALL CLEANOUT	**WALL CLEANOUT:** DURA-COATED CAST IRON BODY, GAS AND WATERTIGHT ABS TAPERED THREAD PLUG, SMOOTH STAINLESS STEEL ACCESS COVER WITH SECURING SCREW	**ZURN** NO. Z-1441 **WADE** NO. W-8450-R **J. R. SMITH** NO. 4402

PLUMBING FIXTURE AND PIPE SIZING SCHEDULE

MARK	FIXTURE	WASTE	VENT	COLD	HOT	DESCRIPTION	APPROVED MANUFACTURERS
P-1	WATER CLOSET BARRIER FREE	4"	AS SHOWN ON PLANS	1 1/4"	---	**WATER CLOSET:** FLOOR MOUNTED, FLUSHOMETER, ELONGATED BOWL, WHITE VITREOUS CHINA, SIPHON JET, 1 1/2" TOP SPUD, BOLT CAPS, 1.6 GPF, 16 1/2" HIGH **FLUSH VALVE:** NON-HOLD OPEN, LOW FORCE, ADA COMPLIANT HANDLE, SYNTHETIC RUBBER DIAPHRAGM WITH DUAL FILTERED FIXED BYPASS, 1" IPS SCREWDRIVER STRAIGHT STOP, VACUUM BREAKER FLUSH CONN., GROUND JOINT TAILPIECE, 1 1/2" TOP SPUD, CAST WALL FLANGE WITH SET SCREW AND SWEAT SOLDER ADAPTER CONTROLS FOR FLUSH VALVE SHALL BE MOUNTED ON WIDE SIDE OF TOILET AREAS. **SEAT:** FINISH WHITE, EXTRA HEAVY DUTY PLASTIC FOR ELONGATED BOWL, OPEN FRONT LESS COVER, STAINLESS STEEL CHECK HINGE.	**AMERICAN STANDARD** MADERA NO. 3043.001 **SLOAN** ROYAL NO. 100-1.6 **AMERICAN STANDARD** NO. 5905.100
P-2	LAVATORY BARRIER FREE	1 1/2"		1/2"	---	**LAVATORY:** WALL HUNG, 20 1/2" x 18 1/2", WHITE VITREOUS CHINA, FRONT OVERFLOW AND SINGLE HOLE - CENTER **TRIM:** LAVATORY FAUCET, WITH SINGLE HOLE CENTERS, SPOUT AND AERATOR, PUSH HANDLE, ADJUSTABLE FLOW CYCLE, SELF CLOSING METERING, PERFORATED GRID DRAIN WITH OFFSET 1 1/4" TAIL PIECE. PROVIDE STOPS, SUPPLIES, TRAP, ETC. TO MAKE A COMPLETE INSTALLATION **CARRIER:** DURA-COATED RECTANGULAR STEEL UPRIGHTS WITH WELDED FEET, ADJUSTABLE TOP SUPPORT PLATE, MOUNTING FASTENERS, CONCEALED ARMS, STEEL SLEEVES & ALIGNMENT TRUSS	**AMERICAN STANDARD** LUCERNE NO. 0356.421 **AMERICAN STANDARD** NO. 1340.105 **ZURN** NO. Z-1231 **WADE** NO. 520 **J. R. SMITH** NO. 700
P-3	URINAL	2"		1"	---	**URINAL:** WALL MOUNTED, WHITE VITREOUS CHINA, SIPHON JET WITH FLUSHING RIM, 1.0 GPF, 3/4" INLET SPUD **FLUSH VALVE:** NON-HOLD OPEN HANDLE, EXPOSED DIAPHRAM, 3/4" IPS SCREWDRIVER ANGLE STOP WITH PROTECTIVE CAP, VACUUM BREAKER FLUSH CONN., ADJUSTABLE TAILPIECE, 3/4" TOP SPUD, SWEAT SOLDER ADAPTER **CARRIER:** DURA-COATED RECTANGULAR STEEL UPRIGHTS WITH WELDED FEET, ADJUSTABLE SUPPORT PLATES AND MOUNTING FASTENERS	**AMERICAN STANDARD** LYNBROOK NO. 6601.012 **KOHLER** FRESHMAN NO. K-4989-T **ELJER** CORRECTO NO. 161-1030 **ZURN** AQUAFLUSH NO. Z-6003AV-WS1 **SLOAN-ROYAL** NO. 186-1 **ZURN** NO. Z-1222 **WADE** NO. W-400-AM11 **J. R. SMITH** NO. 637
P-4	SINK	1 1/2"		1/2"	1/2"	**SINK:** COUNTER MOUNTED, DOUBLE COMPARTMENT 20 GAUGE TYPE 302 STAINLESS STEEL, 33"x19 1/2"x6", SELF-RIMMING, HOLES ON 8" CENTERS **TRIM:** SINK FAUCET, WITH 8" CENTERS, SWIVEL SPOUT W/AERATOR, METAL LEVER HANDLES, INSTALL STAINLESS STEEL DRAIN WITH REMOVABLE CRUMB CUP STRAINER. PROVIDE STOPS, SUPPLIES, TRAP, ETC. TO MAKE A COMPLETE INSTALLATION	**ELKAY** NO. LRAD 3319 **CHICAGO** NO. 786-E3CP **T & S BRASS** NO. B-2866-05 **SPEAKMAN** NO. SC-5763
P-5	SERVICE SINK	3"		1/2"	1/2"	**SINK:** FLOOR MOUNTED, CORNER 24"x24"x12" WITH 6" DROP FRONT, PEARL GREY MARBLE CHIPS AND WHITE PORTLAND CEMENT GROUND SMOOTH, 20 GUAGE STAINLESS STEEL SPLASH GUARD & CAP ON THRESHOLD, PROVIDE 36" RUBBER HOSE, SILICONE SEALANT. **TRIM:** SINK FAUCET WITH VACUUM BREAKER, INTEGRAL STOPS AND ROUGH CHROME FINISH, SEAL WALL WITH SILICONE SEALANT.	**STERN-WILLIAMS** NO. SBC-1700 **FIAT** NO. TSBC-1610 **FLORESTONE** NO. 96 **CHICAGO** NO. 897-RCF **T & S BRASS** NO. B-665-BSTR **SPEAKMAN** NO. SC-5811-RCP
P-6	SHOWER	2" F.D.		1/2"	1/2"	**SHOWER:** PRESSURE BALANCING MIXING VALVE WITH INTEGRAL VOLUME CONTROL AND ADJUSTABLE STOP SCREW TO LIMIT HANDLE TURN, INTEGRAL CHECK STOPS, IN-LINE VACUUM BREAKER, SINGLE BLADE LEVER HANDLE. WALL/HAND SHOWER WITH FLEXIBLE METAL HOSE, WALL CONNECTION AND FLANGE. 30" SLIDE BAR FOR HAND SHOWER	**SYMMONS** NO. S-96-300-B30-X-V-L **LEONARD** NO. 4506
P-7	WASHER MACHINE OUTLET BOX	2"		1/2"	1/2"	**WASHER MACHINE OUTLET BOX:** HIGH IMPACT POLYSTYRENE WASHING MACHINE OUTLET BOX	**OATEY** QUADTRO
P-8	ELECTRIC WATER COOLER BARRIER FREE	1 1/4"		1/2"	---	**EWC:** 8.1 GPH - BASED ON 80° INLET AND 50° DRINKING WATER TEMP. 1/6 HP COMPRESSOR @ 120V. LIGHT TOUCH PRESSBAR, OPERABLE FROM BOTH SIDES OR FRONT, POLISHED CHROME PLATED BRASS, COLOR OF CABINET AS DIRECTED BY ARCHITECT. PROVIDE TRAP, DRAIN, SUPPLIES, ETC. TO MAKE A COMPLETE INSTALLATION **CARRIER:** DURA-COATED RECTANGULAR STEEL UPRIGHTS WITH WELDED FEET, ADJUSTABLE SUPPORT PLATES, MOUNTING FASTENERS, AND B1-LEVEL CONFIGURATION	**ELKAY** NO. EZSTL8C **OASIS** NO. PBACSL **SUNROC** NO. ADA-8ACB **ZURN** NO. Z-1225-BL **WADE** NO. 440 **J. R. SMITH** NO. 830

PLUMBING GENERAL NOTES:

1. CONTRACTOR SHALL PROVIDE COMPLETE PLUMBING SYSTEMS AS DETAILED. WORK CONSISTS OF FURNISHING ALL MATERIALS, EQUIPMENT, AND SERVICES REQUIRED FOR COMPLETE SYSTEMS.
2. COORDINATE WORK WITH OTHER TRADES TO AVOID CONFLICTS.
3. COORDINATE FINAL LOCATIONS OF FLOOR DRAINS IN MECHANICAL ROOMS WITH MECHANICAL CONTRACTOR. COORDINATE LOCATIONS OF FLOOR DRAINS IN OTHER SPACES WITH ARCHITECTURAL DRAWINGS.
4. UNLESS OTHERWISE NOTED ALL PIPING SHALL BE RUN IN CONCEALED SPACES.
5. DOMESTIC WATER PIPING SHALL BE: TYPE-L COPPER ABOVE GRADE & TYPE-K COPPER BELOW GRADE. FITTINGS & JOINTS SHALL BE SOLDERED.
6. COPPER PIPING INSTALLED WITHIN BLOCK WALLS OR IN CONTACT WITH CONCRETE SHALL BE INSTALLED WITH 4 MIL POLYETHYLENE PIPE GUARD. BLUE FOR COLD WATER AND RED FOR HOT WATER.
7. ALL SOIL, WASTE, AND VENT PIPING SHALL BE HUBLESS CAST IRON.
8. GATE VALVES SHALL BE #125 BRONZE WITH UNION BONNET.
9. PROVIDE TRAP PRIMERS WHERE REQUIRED BY CODE.
10. PROVIDE CHROME PLATED STOPS AND SUPPLIES AT ALL WATER CLOSETS AND LAVATORIES.
11. ALL WORK SHALL COMPLY WITH ALL LOCAL AND STATE CODES.
12. PROVIDE COMMERCIALLY MANUFACTURED CAST IRON TO PVC PIPE CONNECTORS AS REQUIRED.
13. PENETRATIONS THROUGH FIRE-RATED ASSEMBLIES SHALL BE SEALED IN AN APPROVED MANNER WHICH MAINTAINS THE REQUIRED FIRE RATING OF THE ASSEMBLY.
    A. WHERE HOLES ARE CIRCULAR, THE PENETRATION SHALL BE PROTECTED WITH FIRE-SEAL SMOKE AND FIRE STOP FITTINGS MANUFACTURED BY O.Z. GEDNEY, LINK SEAL BY THUNDER LINE OR APPROVED EQUAL.
    B. WHERE HOLES ARE RECTANGULAR, THE PENETRATION SHALL BE PROTECTED WITH DOW CORNING 3-6548, SILICONE RTV FOAM, 3M FIRE BARRIER PENETRATION SEAL SYSTEM, OR APPROVED EQUAL.
14. PLUMBING CONTRACTOR SHALL ARRANGE TO PAY FOR ALL NECESSARY PERMITS, LICENSES, AND INSPECTIONS AS REQUIRED BY THE CITY.
15. THE CONTRACTOR IS REQUIRED TO VERIFY ALL DATA AND PROPOSED LOCATIONS OF WATER AND SEWER SERVICES.
16. CHROME PLATED ESCUTCHEONS AND NIPPLES ARE REQUIRED AT ALL FLOOR AND WALL PENETRATIONS.
17. ALL NEW PLUMBING EQUIPMENT, MATERIALS, AND WORKMANSHIP SHALL BE GUARANTEED FOR A PERIOD OF ONE (1) YEAR FROM DATE OF ACCEPTANCE.
18. ARCHITECTURAL DRAWINGS TAKE PRECEDENCE OVER PLUMBING DRAWINGS WITH REFERENCE TO BUILDING CONSTRUCTION. PLUMBING DRAWINGS (PLANS, DIAGRAMS, ETC.) ARE DIAGRAMMATIC AND SHOULD NOT BE SCALED. THE CONTRACTOR SHALL COORDINATE ALL WORK UNDER THIS CONTRACT.
19. MAINTAIN AS-BUILT DRAWINGS, DAILY. SUBMIT TO ARCHITECT/OWNER AFTER COMPLETION OF ALL WORK.
20. NECESSARY REQUIRED PLUMBING ITEMS THAT ARE NOT SHOWN ON THE DRAWINGS DOES NOT RELIEVE THE CONTRACTOR FROM HIS RESPONSIBILITY TO INSTALL A COMPLETE OPERATING PLUMBING SYSTEM.
21. IF ANY DISCREPANCIES SHOULD EXIST THE CONTRACTOR SHALL NOTIFY THE ARCHITECT PRIOR TO BIDDING.
22. THE PLUMBING CONTRACTOR SHALL COORDINATE ALL PLUMBING WORK WITH ALL TRADES THAT MAY BE AFFECTED BY HIS WORK.
23. ALL HORIZONTAL SOIL AND WASTE PIPING 2 1/2" IN DIAMETER AND LESS SHALL HAVE A SLOPE OF 1/4" PER ONE FOOT LENGTH OF PIPE. ALL PIPING 3" IN DIAMETER AND LARGER SHALL HAVE A SLOPE OF 1/8" PER ONE FOOT LENGTH OF PIPE.
24. ALL WATER PIPING SHALL BE SUPPORTED RIGIDLY AND IN LINE FROM BUILDING STRUCTURE. OFFSET PIPING TO AVOID STRUCTURAL MEMBERS, CANTS, FLASHING, MECHANICAL AND ELECTRICAL EQUIPMENT, ETC.
25. WHERE WATER PRESSURES ARE EXCESSIVE OR WHERE REQUIRED TO ELIMINATE WATER HAMMER OR WHEN DEEMED NECESSARY BY LOCAL AUTHORITIES, APPROVED ENGINEERED WATER HAMMER ARRESTOR SHALL BE PROVIDED.
26. CONTRACTOR SHALL COORDINATE ALL PIPING LOCATION AND INVERT ELEVATIONS WITH FOOTINGS AND FOUNDATIONS BEFORE INSTALLING AND ADJUST AS REQUIRED.
27. INSULATE ALL HOT WATER PIPING WITH 1" THICK HIGH DENSITY FIBERGLASS INSULATION WITH FACTORY APPLIED VAPOR BARRIER ALL SERVICE JACKET.
28. THE CONTRATOR SHALL CLEAN/POLISH TOPS OF ALL FLOOR DRAINS AND CLEANOUTS. CONCRETE, DIRT AND TAPE SHALL BE COMPLETELY REMOVED OR THE TOPS SHALL BE REPLACED.
29. WHERE FLOOR PLANS SHOW LOCATION AND LAYOUT OF EXISTING SANITARY, WATER OR VENT PIPING, THE CONTRACTOR SHALL ASSUME THESE LOCATION ARE APPROXIMATE AND CONTRACTOR SHALL FIELD VERIFY LOCATIONS PRIOR TO BIDDING AND CONSTRUCTION AND PROVIDE ALL NECESSARY PIPING FOR A COMPLETE SYSTEM.

PLUMBING FIXTURE NOTES:

1. MOUNTING HEIGHT AS PER ARCHITECT.
2. TRAPS, SUPPLIES AND ALL OTHER EXPOSED PIPING SHALL BE CAST BRASS WITH A POLISHED CHROME FINISH. ACCEPTABLE MANUFACTURERS INCLUDE McGUIRE OR APPROVED EQUAL.
3. FAUCETS WITH WRIST BLADE HANDLES SHALL PROVIDE 1/4 TURN FULL OPEN TO FULL CLOSED OPERATION.
4. COORDINATE INSTALLATION OF COUNTER MOUNTED SINKS WITH GENERAL CONTRACTOR. DO NOT CUT CABINET SUPPORT ELEMENTS WITHOUT THE APPROVAL OF THE ARCHITECT. VENT SIZES SHALL BE 2" UNLESS OTHERWISE NOTED.
5. PROVIDE CUT SHEETS ON ALL FIXTURE AND TRIM TO OWNER AND ARCHITECT FOR REVIEW AND APPROVAL BEFORE ORDERING.

hayes | cumming
architects

2210 central ave, suite 100
st. petersburg, fl 33712
ph 727.321.0900
fx 727.321.0903

AA26001260
hc-arc.com

ROBERT TINTERA
P.E. 46011

andrew m. hayes, aia, leed bd+c
paul v. cumming, aia, leed bd+c

©Copyright - All Rights Reserved

members of
AIA
American Institute of Architects

CONSULTANT:

DIAMONDBACK ENGINEERING
1801 North Himes Avenue
Tampa, Florida 33607
Tele. (813) 350-0080
REG. NO. EB9758
D.E. JOB #14202

CLIENT / PROJECT NAME:

CITY OF KEY WEST
RENOVATION TO

FREDERICK DOUGLASS RECREATION CENTER

111 OLIVIA STREET
KEY WEST, FL 33040

BID SET

Original drawing is 24"x36". Scale accordingly if reduced.

SHEET TITLE:

PLUMBING SCHEDULES, NOTES AND LEGEND

REVISIONS:

DATE ISSUED: 03/28/2016
PROJECT NO.: 12.0D01

DRAWING NUMBER:

P-001 SHEET: 53 OF 68

7/1/2013 8:47:05 AM

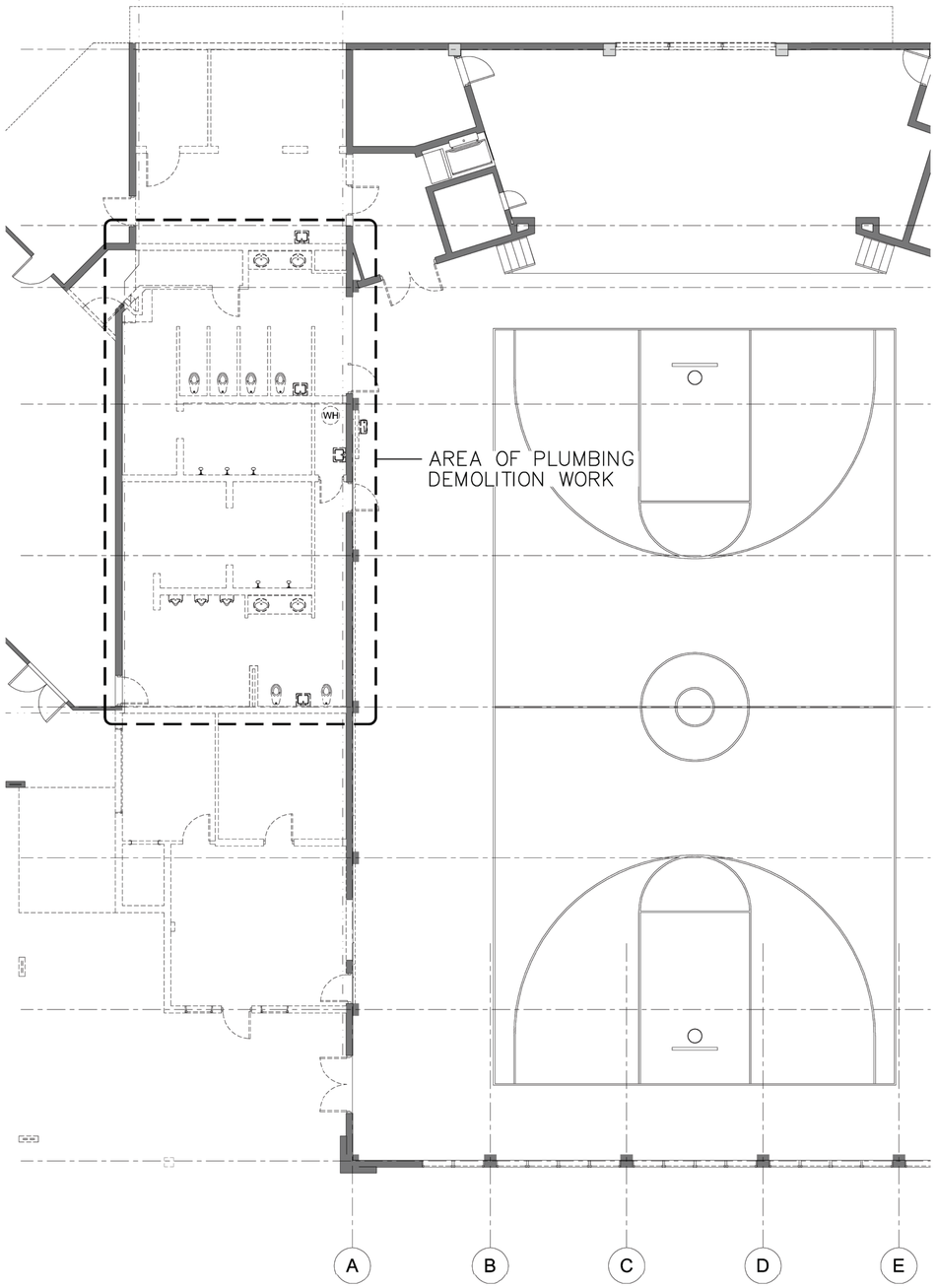

PLUMBING DEMOLITION LOCATION PLAN

SCALE: 1/8"=1'-0" /14202

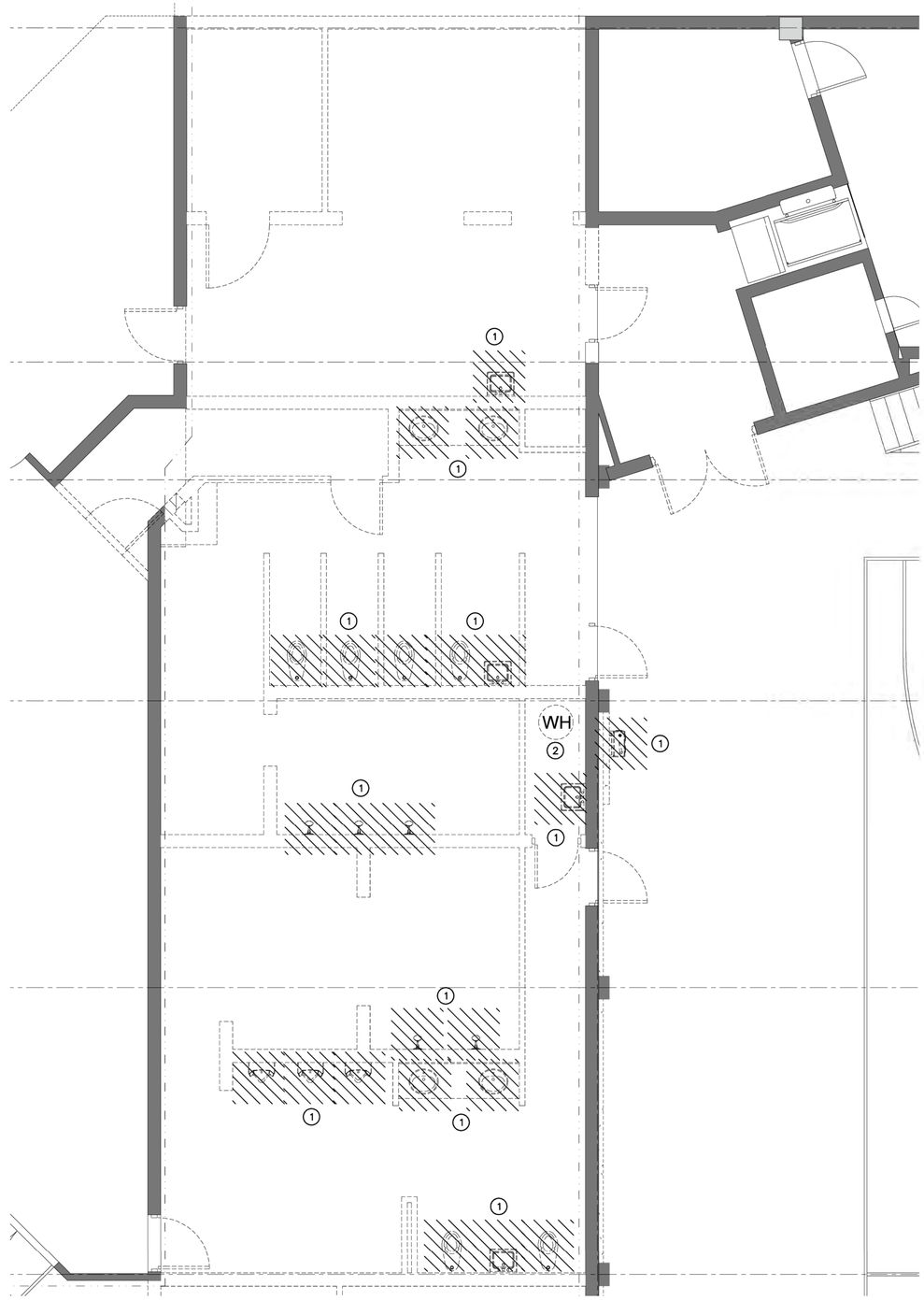

PLUMBING DEMOLITION PLAN

SCALE: 1/4"=1'-0" /14202

DEMOLITION KEYED NOTES:

1. REMOVE EXISTING PLUMBING FIXTURE AND ASSOCIATED PIPING. SANITARY PIPING SHALL BE CAPPED AT TAKE-OFF BELOW SLAB. REPAIR SLAB WHERE PIPE WAS REMOVED.
2. EXISTING WATER HEATER TO BE REUSED.

PLUMBING DEMOLITION GENERAL NOTES:

1. REMOVE EXISTING SANITARY, VENT AND WATER LINES FROM WALLS BEING DEMOLISHED (SEE ARCHITECTURAL PLANS FOR WALLS BEING DEMOLISHED). REMOVE PIPING BACK TO RISER ON BRANCH TAKEOFF AND CAP.
2. REMOVE EXISTING SANITARY VENT AND WATER LINES THAT ARE NO LONGER IN USE DUE TO THIS OR PREVIOUS RENOVATIONS. VERIFY PIPING IS INACTIVE BEFORE REMOVAL.
3. VERIFY ALL EXISTING SANITARY AND VENT LINES ARE CAPPED AND SUPPORTED PROPERLY BEFORE NEW CEILINGS ARE INSTALLED.

hayes | cumming
architects

2210 central ave, suite 100
st. petersburg, fl 33712
ph 727.321.0900
fx 727.321.0903

AA26001260
hc-arc.com

ROBERT TINTERA
P.E. 46011

andrew m. hayes, aia, leed bd+c
paul v. cumming, aia, leed bd+c
©Copyright - All Rights Reserved

members of
AIA
American Institute of Architects

CONSULTANT:

DIAMONDBACK ENGINEERING
1801 North Himes Avenue
Tampa, Florida 33607
Tele. (813) 350-0080
REG. NO. EB9758
D.E. JOB #14202

CLIENT / PROJECT NAME:

CITY OF KEY WEST
RENOVATION TO

FREDERICK DOUGLASS RECREATION CENTER

111 OLIVIA STREET
KEY WEST, FL 33040

BID SET

Original drawing is 24"x36". Scale accordingly if reduced.

SHEET TITLE:

PLUMBING DEMOLITION PLAN

REVISIONS:

DATE ISSUED: 03/28/2016
PROJECT NO.: 12.0D01

DRAWING NUMBER:

P-002 SHEET: 54 OF 68

7/1/2013 8:47:05 AM

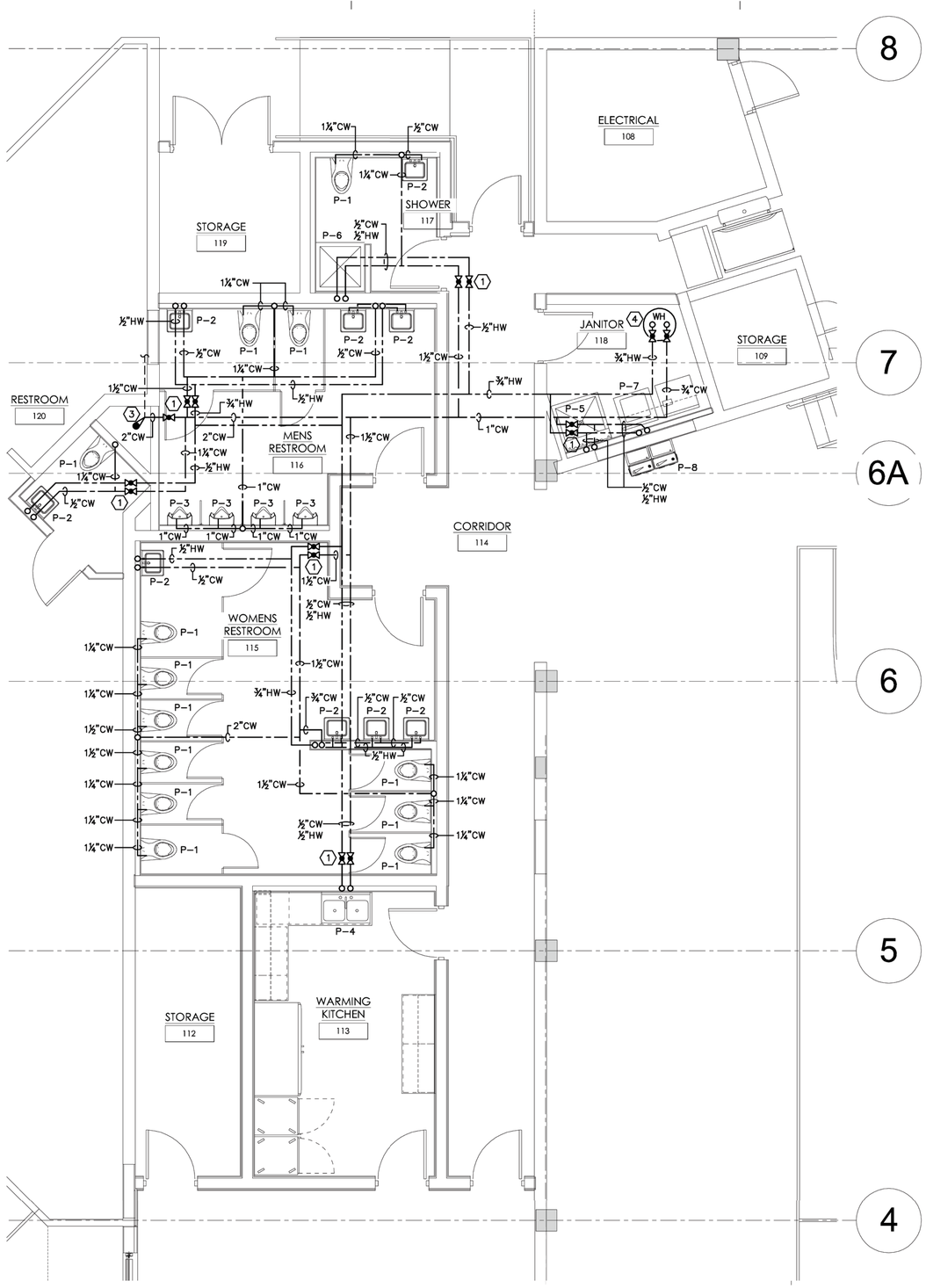

PLUMBING WATER PLAN

SCALE: 1/4"=1'-0" /14202

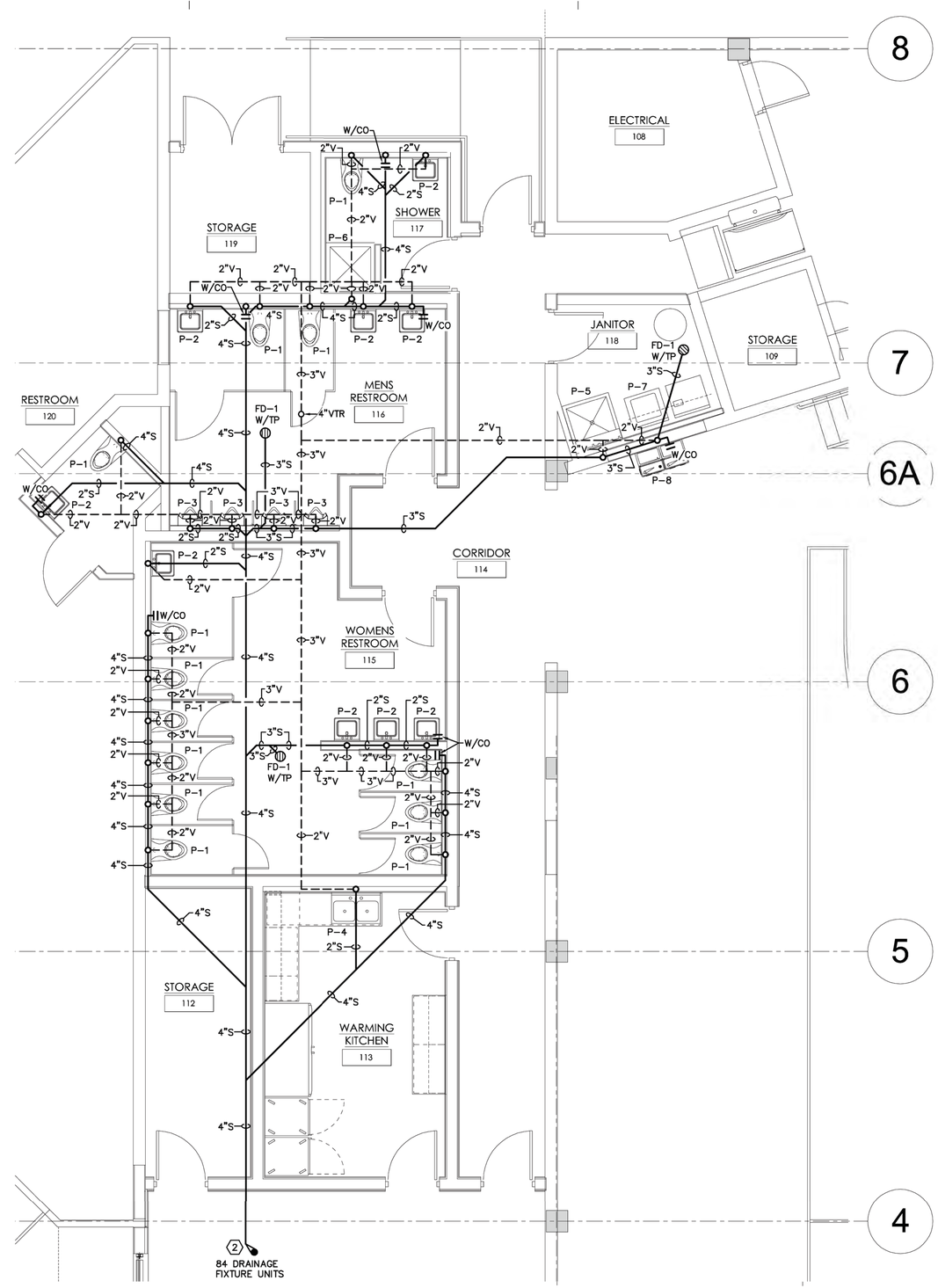

PLUMBING SANITARY PLAN

SCALE: 1/4"=1'-0" /14202

PLUMBING KEYED NOTES:

1. WATER SHUT OFF VALVES.
2. CONNECT NEW 4" SANITARY PIPE TO EXISTING SANITARY IN AREA. CONTRACTOR TO FIELD VERIFY EXACT LOCATION PRIOR TO BID.
3. CONNECT NEW 2" COLD WATER PIPE TO EXISTING COLD WATER PIPE IN AREA. CONTRACTOR TO FIELD VERIFY EXACT LOCATION PRIOR TO BID.
4. REUSE EXISTING WATER HEATER.

hayes | cumming
architects

2210 central ave, suite 100
st. petersburg, fl 33712
ph 727.321.0900
fx 727.321.0903

AA26001260
hc-arc.com

ROBERT TINTERA
P.E. 46011

andrew m. hayes, aia, leed bd+c
paul v. cumming, aia, leed bd+c

©Copyright - All Rights Reserved

members of
AIA
American Institute of Architects

CONSULTANT:

DIAMONDBACK ENGINEERING
1801 North Himes Avenue
Tampa, Florida 33607
Tele. (813) 350-0080
REG. NO. EB9758
D.E. JOB #14202

CLIENT / PROJECT NAME:

CITY OF KEY WEST

RENOVATION TO

FREDERICK DOUGLASS RECREATION CENTER

111 OLIVIA STREET
KEY WEST, FL 33040

BID SET

Original drawing is 24"x36". Scale accordingly if reduced.

SHEET TITLE:

PLUMBING FLOOR PLAN

REVISIONS:

DATE ISSUED: 03/28/2016
PROJECT NO.: 12.0D01

DRAWING NUMBER:

P-003 SHEET: 55 OF 68

7/1/2013 8:47:05 AM

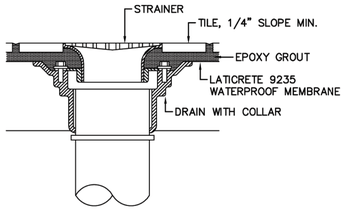

FLOOR DRAIN DETAIL
SCALE: NTS /14202

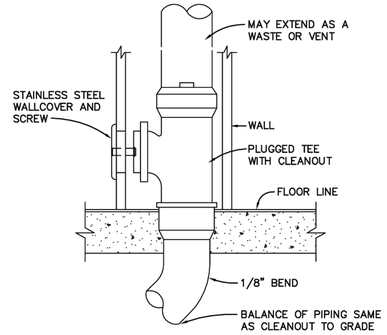

WALL CLEANOUT DETAIL
SCALE: NTS /14202

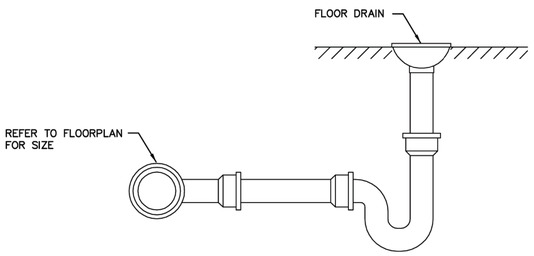

FLOOR DRAIN DETAIL
SCALE: NTS /14202

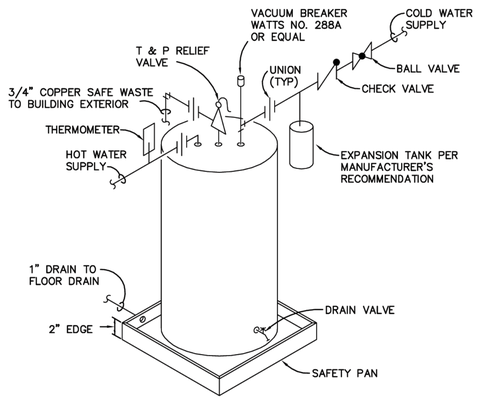

WATER HEATER PIPING DIAGRAM
SCALE: NTS /14202

NOTES:

1. STORAGE WATER HEATER SYSTEMS THAT DO NOT INCLUDE A CIRCULATING SYSTEM SHALL EITHER HAVE AND INTEGRAL HEAT TRAP OR PIPED TRAP.
2. TERMINATE DRAIN PIPING NO LESS THAN 6" OR NO MORE THAN 24" ABOVE GRADE.

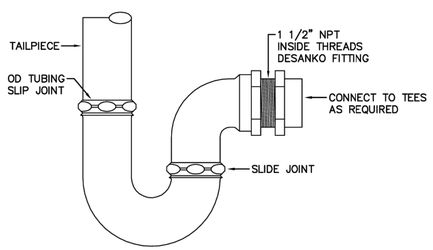

NOTES:

1. THE ENTIRE P-TRAP ASSEMBLY, INCLUDING SLIP JOINT NUTS, SHALL BE 17 GAUGE, HEAVY CAST BRASS WITH A POLISHED CHROME PLATED FINISH.
2. FOR BARRIER FREE LAVATORIES, INSTALL 1 1/4" OFFSET TAILPIECE.

"P"TRAP DETAIL
SCALE: NTS /14202

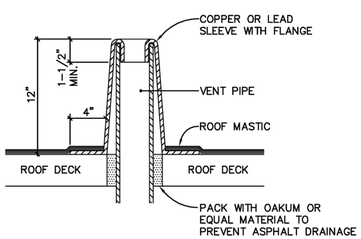

VENT THRU ROOF DETAIL
SCALE: NTS /14202

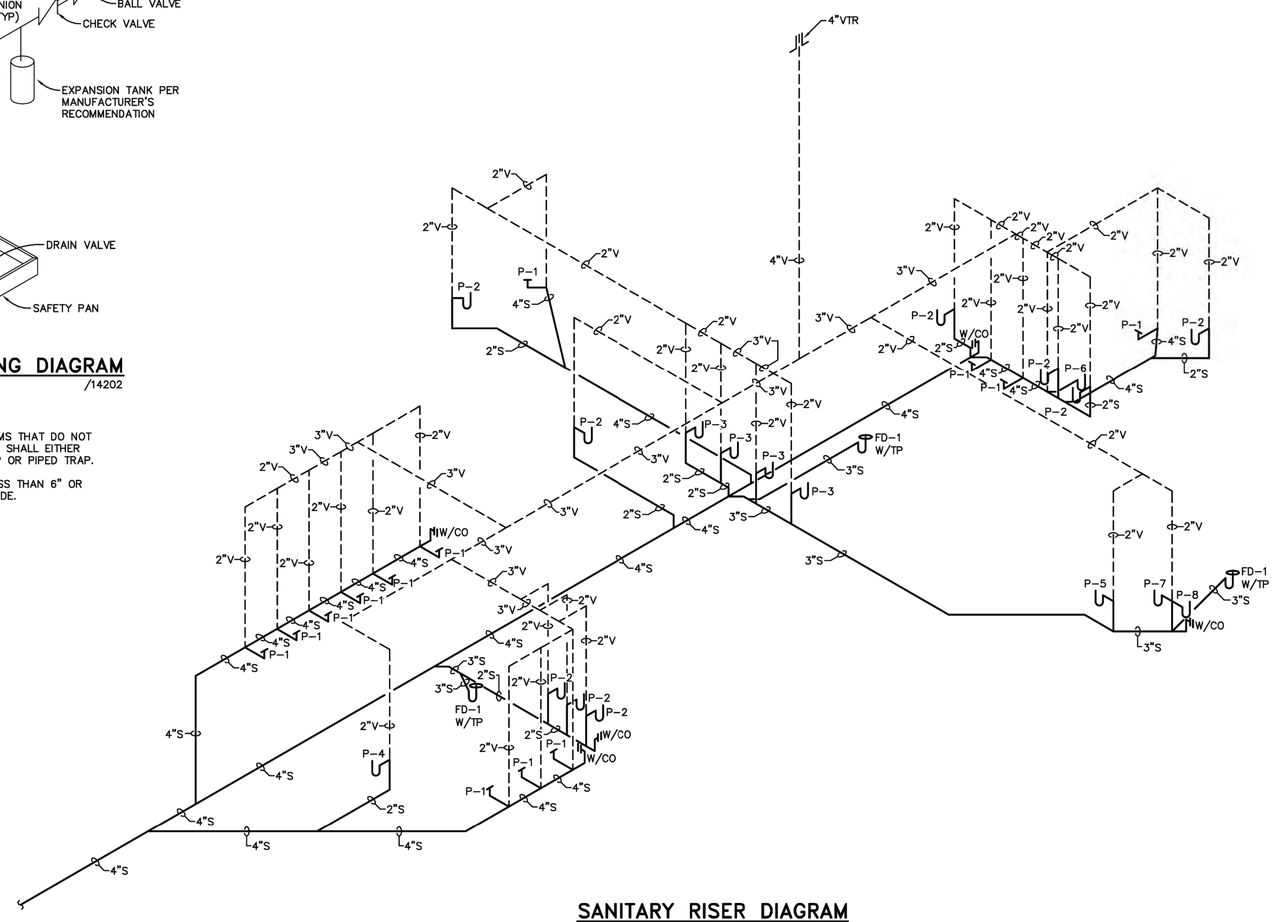

SANITARY RISER DIAGRAM
SCALE: NTS /14202

hayes | cumming
architects

2210 central ave, suite 100
st. petersburg, fl 33712
ph 727.321.0900
fx 727.321.0903

AA26001260
hc-arc.com

ROBERT TINTERA
P.E. 46011

andrew m. hayes, aia, leed bd+c
paul v. cumming, aia, leed bd+c
©Copyright - All Rights Reserved

members of
AIA
American
Institute of
Architects

CONSULTANT:

DIAMONDBACK
ENGINEERING
1801 North Himes Avenue
Tampa, Florida 33607
Tele. (813) 350-0080
REG. NO. EB9758
D.E. JOB #14202

CLIENT / PROJECT NAME:

CITY OF KEY WEST

RENOVATION TO

FREDERICK DOUGLASS RECREATION CENTER

111 OLIVIA STREET
KEY WEST, FL 33040

BID SET

Original drawing is 24"x36". Scale accordingly if reduced.

SHEET TITLE:

PLUMBING SANITARY RISER
AND DETAILS

REVISIONS:

DATE ISSUED: 03/28/2016
PROJECT NO.: 12.0D01

DRAWING NUMBER:

P-004 SHEET: 56 OF 68

7/1/2013 8:47:05 AM

VENTILATION RATE CALCULATIONS TABLE

FLORIDA MECHANICAL CODE TABLE 403.3

OCCUPATION CATEGORY – GYM
BREATHING ZONE OUTSIDE AIR FLOW FOR GYM

SEATING AREA
$V_{bz} = R_pP_z + R_aA_z$
V_{bz} = 7.5 CFM x 180 PEOPLE + (.06)(5320)
V_{bz} = 1,669 CFM
+
PLAY AREA
V_{bz} = (.30)(3652)
V_{bz} = 1,096 CFM

V_{bz} TOTAL = 1,669 + 196 CFM = 2,765

ACTUAL OUTSIDE AIR PROVIDED = 2,900 CFM

OCCUPATION CATEGORY – COMMUNITY ROOM
BREATHING ZONE OUTSIDE AIR FLOW FOR

$V_{bz} = R_pP_z + R_aA_z$
V_{bz} = 5 CFM x 34 PEOPLE + (.06)(1202)
V_{bz} = 242 CFM

$V_{oz} = V_{bz}/E_z$
V_{oz} = 242/1
V_{oz} = 242 CFM (MIN REQUIRED)

ACTUAL OUTSIDE AIR PROVIDED = 245 CFM

OCCUPATION CATEGORY – RESTROOMS
BREATHING ZONE OUTSIDE AIR FLOW FOR

EXHAUST = 70 CFM/WATER CLOSET OR URINAL
EXHAUST = 70 x 16 = 1050 CFM
EXHAUST = 1120 CFM THROUGH FANS (MIN REQUIRED)
EXHAUST = 1,230 PROVIDED THROUGH FANS

V_{bz} = BREATHING ZONE OUTDOOR AIRFLOW
R_p = OUTDOOR AIR RATE REQUIRED PER PERSON
P_z = ZONE POPULATION
R_a = OUTDOOR AIR RATE PER UNIT AREA
A_z = ZONE FLOOR AREA
V_{oz} = ZONE OUTSIDE AIRFLOW
E_{oz} = ZONE AIR DISTRIBUTION EFFECTIVENESS

MECHANICAL LEGEND

SYMBOL	DESCRIPTION
	NEW DUCTWORK, PIPING, OR EQUIPMENT
	EXISTING DUCTWORK, PIPING, OR EQUIPMENT TO REMAIN
	EXISTING DUCTWORK, PIPING, OR EQUIPMENT TO BE REMOVED
	FLEXIBLE DUCT
	SUPPLY OR OUTSIDE AIR DUCT SECTION
	RETURN DUCT SECTION
	EXHAUST DUCT SECTION
	DUCTWORK TRANSITION
	MANUAL AIR VOLUME CONTROL DAMPER
M M	MOTORIZED DAMPER
	SUPPLY AIR DEVICE. CLEAR TRIANGLE SIDES INDICATE AIR FLOW PATTERN
	RETURN AIR DEVICE
	EXHAUST AIR DEVICE
	NEW LINEAR SUPPLY DIFFUSER
	NEW FIRE DAMPER
	UNDERCUT DOOR 3/4"
	AIRFLOW DIRECTION
#	MECHANICAL NOTE – NUMBER
T	WALL MOUNTED THERMOSTAT
TL	LINE VOLTAGE THERMOSTAT
S	WALL MOUNTED SENSOR
H	HUMIDISTAT
S	SMOKE DETECTOR
	AIR TRANSFER DUT
	CONNECTION BETWEEN NEW AND EXISTING WORK
OA	OUTSIDE AIR
TYP	TYPICAL
—— R —— R ——	REFRIGERANT PIPE ROUTING
—— CD —— CD ——	CONDENSATE DRAIN
+	POSITIVE RELATIVE PRESSURE
–	NEGATIVE RELATIVE PRESSURE

MECHANICAL GENERAL NOTES:

1. IN GENERAL, PLANS AND DIAGRAMS ARE SCHEMATIC ONLY AND SHOULD NOT BE SCALED.
2. INTENT OF THESE NOTES AND MECHANICAL NOTES ON DRAWINGS IS TO CLARIFY THE SCOPE OF WORK AND ALERT CONTRACTOR OF EXISTING CONDITIONS. CONTRACTOR TO VISIT SITE AND VERIFY ALL CLEARANCES BEFORE FABRICATION OF DUCTWORK AND PROVIDE ADDITIONAL OFFSET AND/OR CHANGES IN DUCT SIZES TO MEET FIELD CONDITIONS AND COORDINATE WITH ELECTRICAL, PLUMBING AND FIRE PROTECTION SUBCONTRACTOR BEFORE ANY CONSTRUCTION WORK.
3. BIDDERS SHALL VISIT THE SITE AND FAMILIARIZE THEMSELVES WITH ALL CONDITIONS INVOLVING THE WORK.
4. SHOULD ANY CONFLICTS ARISE, THE CONTRACTOR SHALL NOTIFY THE ENGINEER OF THE CONFLICT BEFORE ANY CHANGES ARE MADE. THE CONTRACTOR SHALL OBTAIN WRITTEN APPROVAL BEFORE PROCEEDING WITH ANY CHANGES.
5. THE GENERAL CONTRACTOR IS RESPONSIBLE FOR ALL TRADES INSTALLATION SCHEDULES. FIXED WORK SUCH AS DUCTWORK AND PLUMBING SHALL BE INSTALLED PRIOR TO ANY TRADE WORK THAT CAN BE EASILY RELOCATED OR OFFSET SUCH AS ELECTRICAL CONDUITS AND SMALL WATER AND GAS LINES ETC.
6. ALL AIR CONDITIONING WORK SHALL NOT INTERFERE WITH CLEARANCES REQUIRED FOR GENERAL AND MECHANICAL CONSTRUCTION. SHOULD AIR CONDITIONING WORK BE INSTALLED WHICH INTERFERES WITH THE WORK OF OTHER CONTRACTORS. SUCH WORK SHALL BE CHANGED AT NO ADDITIONAL COST TO THE OWNER.
7. ALL WORK COVERED IN THIS SECTION SHALL BE CONSTRUCTED IN ACCORDANCE WITH THE LATEST PUBLISHED STANDARDS OF ASHRAE, AND NFPA.
8. ALL MECHANICAL WORK SHALL MEET ALL THE REQUIREMENTS OF THE FLORIDA BUILDING CODE 5th EDITION (2014).
9. IN THE EVENT THAT THERE IS A CONFLICT BETWEEN THE CONTRACT DOCUMENTS AND THE CODE, THE CODE SHALL TAKE PRECEDENCE. THE MECHANICAL CONTRACTOR SHALL STUDY THE CONTRACT DOCUMENTS AND SUBMIT A BID BASED ON WORK WHICH COMPLIES WITH ALL CODE REQUIREMENTS. ANY CONFLICTS BETWEEN THE CONTRACTOR DOCUMENTS AND THE CODE SHALL BE BROUGHT TO THE ATTENTION OF THE ARCHITECT PRIOR TO BID.
10. THE MECHANICAL CONTRACTOR SHALL CHECK ALL EQUIPMENT FOR CORRECT VOLTAGE RATING BEFORE INSTALLATION.
11. IT SHALL BE THE RESPONSIBILITY OF THE MECHANICAL CONTRACTOR FOR THE ADVANCE ORDERING OF LONG LEAD ITEMS SO AS NOT TO DELAY OTHER TRADES RESULTING IN ANY DOWN OR LAG TIME.
12. THE MECHANICAL CONTRACTOR SHALL FURNISH AND INSTALL ALL MINOR ITEMS WHICH ARE OBVIOUSLY AND REASONABLY NECESSARY TO COMPLETE THE INSTALLATION WHETHER OR NOT SPECIFIED AS SHOWN ON THE PLANS.
13. THE MECHANICAL CONTRACTOR SHALL THOROUGHLY CLEAN ALL AIR CONDITIONING EQUIPMENT PRIOR TO SUBSTANTIAL COMPLETION.
14. MECHANICAL CONTRACTOR SHALL ARRANGE TO PAY FOR ALL NECESSARY PERMITS, LICENSES AND INSPECTIONS AS REQUIRED BY THE CITY.
15. ALL NEW MECHANICAL EQUIPMENT, MATERIALS AND WORKMANSHIP SHALL BE GUARANTEED FOR A PERIOD OF ONE (1) YEAR FROM THE DATE OF ACCEPTANCE.
16. TO THE BEST OF THE ARCHITECT'S OR ENGINEER'S KNOWLEDGE, THE PLANS AND SPECIFICATIONS COMPLY WITH THE MINIMUM BUILDING CODES.
17. TURNING VANES SHALL BE PROVIDED IN ALL SUPPLY AND RETURN DUCT RECTANGULAR ELBOWS WITH ANGLES BETWEEN 15 DEGREES AND LESS THAN 90 DEGREES PER FIG. 2–5 OF THE SMACNA MANUAL.
18. DUCT DIMENSIONS SHOWN ON DRAWINGS ARE CLEAR INSIDE DIMENSIONS.
19. DUCTWORK, AHU'S, FCU'S AND OTHER ITEMS OF THE AIR HANDLING SYSTEM SHALL NOT BE SUPPORTED BY THE CEILING OR CEILING SUSPENSION SYSTEM.
20. ALL SUPPLY AND RETURN DUCTWORK SHALL BE EXTERNALLY INSULATED SHEET METAL CONSTRUCTION IN ACCORDANCE WITH LATEST SMACNA STANDARDS.
21. ALL OUTSIDE AIR AND EXHAUST AIR DUCT SHALL BE SHEETMETAL WITH 2" DUCT WRAP INSULATION.
22. UNLESS OTHERWISE NOTED, INSTALL DUCTWORK AS HIGH AS POSSIBLE, TIGHT TO BOTTOM OF STRUCTURE. COORDINATE DUCT ELEVATION WITH RAIN LEADERS, WATER PIPING, SANITARY DRAINS AND MAJOR ELECTRICAL CONDUITS.
23. MAXIMUM LENGTH OF FLEXIBLE DUCT SHALL BE 8'–0".
24. VOLUME DAMPERS WITH LOCKING QUADRANTS SHALL BE INSTALLED IN ALL DUCT BRANCHES.
25. ALL INSULATION SHALL HAVE A MAXIMUM FLAME SPREAD/SMOKE DEVELOPED RATING OF 25/50.
26. DUCT WRAP INSULATION SHALL BE 1–1/2" THICK FLEXIBLE FIBERGLASS, 1.0 PCF DENSITY. MINIMUM INSTALLED R–VALUE SHALL BE R–6.
27. COORDINATE AIR DEVICE LOCATIONS WITH LIGHTING FIXTURES AND FIRE SPRINKLER HEADS.
28. ALL SUPPLY AIR DIFFUSERS SHALL BE 4–WAY THROW UNLESS OTHERWISE NOTED.
29. INSULATE BACK PANS OF ALL DIFFUSERS.
30. ALL WALL MOUNTED THERMOSTATS AND/OR TEMPERATURE SENSORS SHALL BE INSTALLED AT AN ELEVATION OF 48" ABOVE FINISHED FLOOR TO THE CENTERLINE UNLESS OTHERWISE NOTED ON DRAWINGS. LOCATION OF THE WALL MOUNTED THERMOSTAT SHALL BE COORDINATED WITH OTHER TRADES FOR A NEAT APPEARANCE. FINAL LOCATION OF THERMOSTAT SHALL BE SUBJECT TO THE APPROVAL OF THE ENGINEER OR HIS REPRESENTATIVE IN THE FIELD.
31. CONTRACTOR SHALL PROVIDE ALL SUPPLEMENTARY STEEL REQUIRED TO SUSPEND MECHANICAL EQUIPMENT AND MATERIALS.
32. LOCATIONS OF DUCT MOUNTED SMOKE DETECTORS SHOWN ON THE DRAWINGS ARE REFERENCE LOCATIONS ONLY. THE FINAL PLACEMENT OF THE DETECTORS IN THE DUCTWORK SHALL MEET THE REQUIREMENTS OF THE MANUFACTURER'S INSTALLATION INSTRUCTIONS. PROVIDE READILY ACCESSIBLE DUCT ACCESS DOOR FOR INSPECTING AND SERVICING THE DETECTOR. DIVISION 16 CONTRACTOR SHALL PROVIDE DETECTOR AND WIRE. DIVISION 15 CONTRACTOR SHALL INSTALL IN DUCTWORK.
33. REFRIGERANT PIPING SHALL BE ACR TYPE – L, SOFT ANNEALED, TEMPERED FITTINGS. SOLDERING MATERIALS SHALL BE SILVER–LEAD SOLDER. INSULATE REFRIGERANT SUCTION PIPING WITH CLOSED CELL INSULATION. PROTECT EXTERIOR INSULATION WITH U.V. PROTECTANT PAINT.
34. CONDENSATE DRAIN PIPING SHALL BE PVC. PROVIDE TRAP AT THE AIR HANDLING UNIT. INSULATE ALL INTERIOR CONDENSATE PIPING WITH 1/2" THICK CLOSED CELL FOAM INSULATION.
35. PROVIDE ADDITIONAL DUCTWORK AND PIPING SUPPORTS ON BOTH SIDES AND WITHIN 18" OF FIRE RATED WALL. DUCTWORK OR PIPING SHALL NOT BE SUPPORTED FROM ANY FIRE RATED WALL.
36. ALL DUCTWORK MUST BE INSTALLED 6" AWAY FROM ANY FIRE RATED WALL TO FACILITATE INSPECTION.
37. PENETRATIONS THROUGH SMOKE OR FIRE–RATED ASSEMBLIES: PENETRATIONS FOR PIPES, CONDUITS OR OTHER PURPOSES THROUGH ASSEMBLIES (FLOORS, ROOF, WALLS, PARTITIONS, ETC.) WITH A REQUIRED FIRE RESISTANCE RATING SHALL BE SEALED TO THE PENETRATING MEMBER IN AN APPROVED MANNER WHICH MAINTAINS THE REQUIRED FIRE RESISTANCE RATING OF THE ASSEMBLY AS FOLLOWS:
    A. WHERE HOLES FOR PENETRATIONS ARE FORMED CIRCULAR OR CORE–BORED, THE PENETRATION SHALL BE PROTECTED WITH FIRE–SEAL BRAND SMOKE AND FIRE STOP FITTINGS MFG. BY O–Z GEDLEY, LINK SEAL BRAND BY THUNDER LINE OR AN EQUAL APPROVED BY ENGINEER.
    B. WHERE HOLES FOR PENETRATIONS ARE IRREGULAR (NON–CIRCULAR) IN SHAPE, THE PENETRATION SHALL BE PROTECTED WITH DOW CORNING 3–6548, SILICONE RTV FOAM, 3M FIRE BARRIER PENETRATION SEAL SYSTEM OR AN EQUAL APPROVED BY THE ENGINEER.
38. AT THE CONCLUSION OF THE INSTALLATION THE CONTRACTOR SHALL SUBMIT TO THE ENGINEER FOR APPROVAL A COMPLETE CERTIFIED TEST AND BALANCE REPORT FROM AN AGENCY HAVING A MINIMUM OF THREE YEARS EXPERIENCE. REPORT SHALL ITEMIZE THE PERFORMANCE OF EACH AIR DEVICE AND A/C UNIT IN ACCORDANCE WITH ASHRAE GUIDELINES AND CERTIFYING AGENCIES GUIDELINES.
39. CONTRACTOR SHALL MARK T–BAR WITH 1/4" ROUND, RED STICKER TO LOCATE EQUIPMENT AND FIRE DAMPERS.
40. MAINTAIN AS–BUILT DRAWINGS, DAILY. SUBMIT TO ARCHITECT/OWNER AFTER COMPLETION OF ALL WORK.
41. ALL EQUIPMENT SUBMITTED FOR APPROVAL SHALL BE SUBMITTED IN A NUMERICAL SEQUENCE CONSISTANT WITH THE CONTRACT DRAWINGS (IE... AHU–1 IS FOLLOWED BY AHU–2, ETC...). SHOP DRAWINGS (SUBMITTALS) NOT SUBMITTED IN THIS MANNER WILL BE REJECTED WITHOUT REVIEW.
42. ALL ROOF MOUNTED DUCTWORK EXPOSED TO ATMOSPHERE SHALL BE PROVIDED WITH CLASS 1 DUCT SEAL AND 2 LAYERS OF RIGID INSULATION IN WATER SHED CONFIGURATION TO PREVENT STANDING WATER ON DUCTWORK. ALL EXTERIOR INSULATION SHALL BE PROTECTED WITH WEATHERPROOF SELF HEALING, SELF ADHESIVE MEMBRANE EQUAL TO ALUMAGUARD ALL WEATHER FLEXIBLE WEATHER PROOF JACKET.
43. FLEXIBLE DUCTWORK SHALL BE LOW PRESSURE FACTORY FABRICATED CONSISTING OF A ZINC–COATED SPRING STEEL HELIX, NON–PERFORATED INNER LINER AND 1–1/2" THICK FIBERGLASS INSULATION WITH METALIZED MYLAR VAPOR BARRIER.
44. ALL AIR DISTRIBUTION SYSTEM SEALING AND FASTENING SHALL BE IN STRICT ACCORDANCE WITH THE REQUIREMENTS OF THE 5TH EDITION (2014) FLORIDA ENERGY CODE.
45. PROVIDE HOT–DIPPED GALVANIZED STEEL FASTENERS, ANCHORS, RODS, STRAPS, TRIM, CHANNEL AND ANGLES FOR SUPPORT OF DUCTWORK.

hayes | cumming
architects

2210 central ave, suite 100
st. petersburg, fl 33712
ph 727.321.0900
fx 727.321.0903

AA26001260
hc-arc.com

ROBERT TINTERA
P.E. 46011

andrew m. hayes, aia, leed bd+c
paul v. cumming, aia, leed bd+c

©Copyright - All Rights Reserved

members of
AIA
American Institute of Architects

CONSULTANT:

DIAMONDBACK ENGINEERING
1801 North Himes Avenue
Tampa, Florida 33607
Tele. (813) 350-0080
REG. NO. EB9758
D.E. JOB #14202

CLIENT / PROJECT NAME:

CITY OF KEY WEST

RENOVATION TO

FREDERICK DOUGLASS RECREATION CENTER

111 OLIVIA STREET
KEY WEST, FL 33040

BID SET

Original drawing is 24"x36". Scale accordingly if reduced.

SHEET TITLE:

MECHANICAL GENERAL NOTES AND LEGEND

REVISIONS:

DATE ISSUED: 03/28/2016
PROJECT NO.: 12.0D01

DRAWING NUMBER:

M-001 SHEET: 57 OF 68

7/1/2013 8:47:05 AM

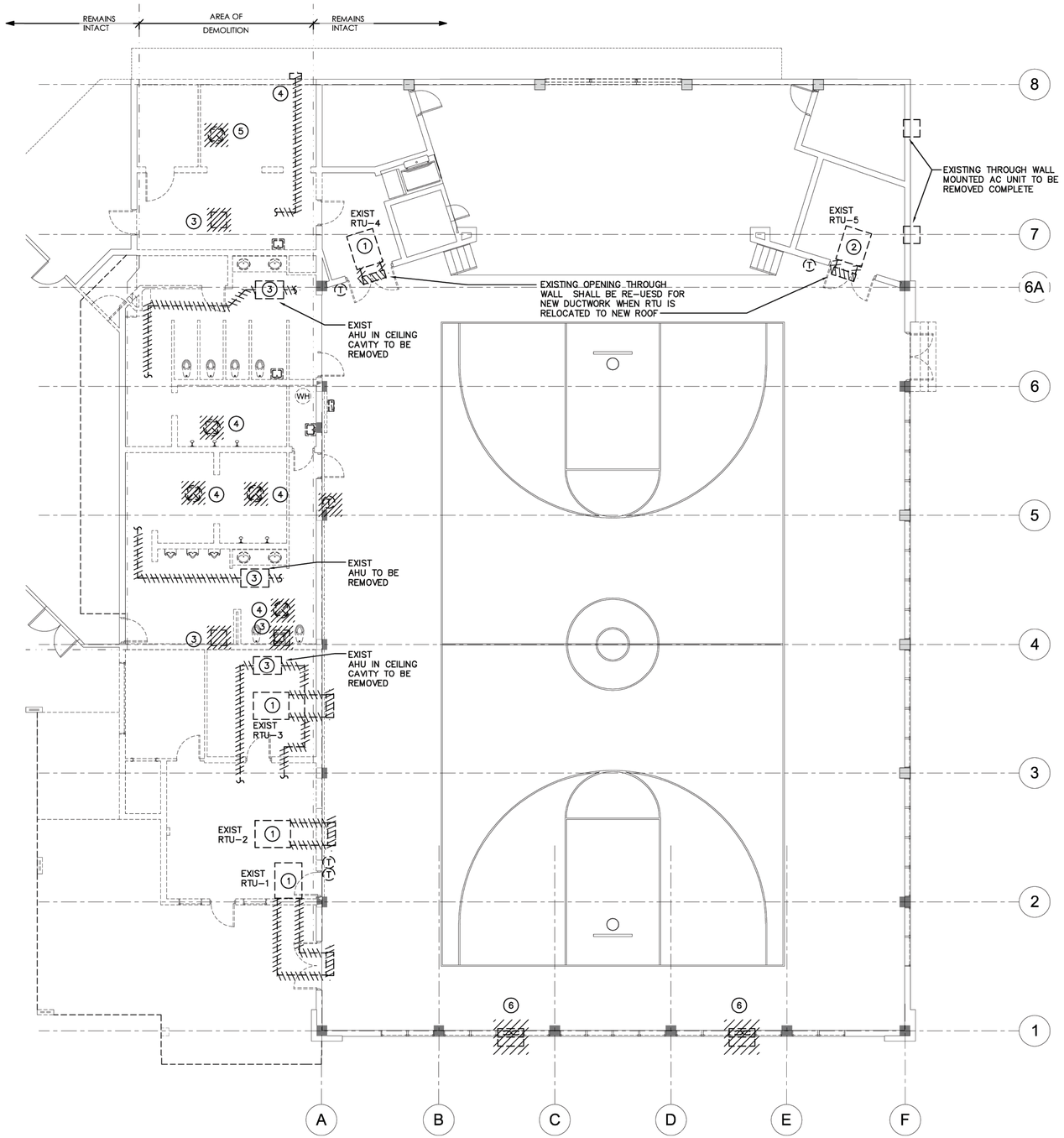

MECHANICAL DEMOLITION PLAN

SCALE: 1/8"=1'-0" /14202

DEMOLITION KEYED NOTES:

1. EXISTING ROOF TOP UNIT (RTU) SHALL BE CAREFULLY REMOVED AND STORED IN A SECURE LOCATION FOR RE-USE. RTU SHALL BE RE-INSTALLED ON NEW ROOF. SEE NEW WORK PLAN.
2. EXISTIN RTU SHALL BE REMOVED.
3. EXISTING ABOVE CEILING AHU AND ASSOCIATED ROOF MOUNTED CONDENSING UNIT SHALL BE REMOVED COMPLETE INCLUDING ALL ASSOCIATED SUPPLY AND RETURN AIR DISTRIBUTION SYSTEMS AIR DEVICES, REFRIGERANT AND DRAIN PIPING.
4. EXISTING EXHAUST FAN AND ASSOCIATED DUCTWORK AND AIR DEVICES SHALL BE REMOVED COMPLETE.
5. EXISTING KITCHEN HOOD EXHAUST SYSTEM SHALL BE REMOVED COMPLETE.
6. EXISTING SIDEWALL MOUNTED EXHAUST FANS SHALL BE REMOVED COMPLETE.

REMOVAL/PROTECTION AND STORAGE REQUIREMENTS FOR EXISTING RTUS NOTED TO BE REUSED

1. PROVIDE PRE-DEMOLITION PHOTOGRAPHS OF THE EXISTING ROOF TOP AC UNITS TO OWNER PRIOR TO START OF ANY DEMOLITION
2. TEST RTU'S TO VERIFY FULLY OPERATIONAL PRIOR TO REMOVAL AND PROVIDE WRITTEN REPORT TO OWNER. NOTE ANY DEFICIENCIES TO OWNER AND ENGINEER IMMEDIATELY.
3. REMOVE REFRIGERANT FROM MECHANICAL EQUIPMENT TO BE REMOVED AND RE-INSTALLED ACCORDING TO 40 CFR 82 AND REGULATIONS OF AUTHORITY HAVING JURISDICTION
4. DISCONNECT AND CAREFULLY REMOVE EXISTING RTU'S NOTED TO BE REMOVED AND RE-INSTALLED. CLEAN AND PREPARE FOR RE-USE. CRATE AND STORE EQUIPMENT IN A SECURE LOCATION TO PROTECT FROM DAMAGE.
5. PRIOR TO RE-INSTALLATION UNITS SHALL BE TESTED TO VERIFY FULLY OPERATIONAL PRIOR TO PLACEMENT ON NEW ROOF
6. RTU'S SHALL BE RE-INSTALLED IN LOCATIONS NOTED ON NEW WORK PLANS.

hayes | cumming
architects

2210 central ave, suite 100
st. petersburg, fl 33712
ph 727.321.0900
fx 727.321.0903

AA26001260
hc-arc.com

ROBERT TINTERA
P.E. 46011

andrew m. hayes, aia, leed bd+c
paul v. cumming, aia, leed bd+c

©Copyright - All Rights Reserved

members of
AIA
American Institute of Architects

CONSULTANT:

DIAMONDBACK ENGINEERING
1801 North Himes Avenue
Tampa, Florida 33607
Tele. (813) 350-0080
REG. NO. EB9758
D.E. JOB #14202

CLIENT / PROJECT NAME:

CITY OF KEY WEST

RENOVATION TO

FREDERICK DOUGLASS RECREATION CENTER

111 OLIVIA STREET
KEY WEST, FL 33040

BID SET

Original drawing is 24"x36". Scale accordingly if reduced.

SHEET TITLE:

MECHANICAL DEMOLITION PLAN

REVISIONS:

DATE ISSUED: 03/28/2016
PROJECT NO.: 12.0D01

DRAWING NUMBER:

M-002 SHEET: 58 OF 68

7/1/2013 8:47:05 AM

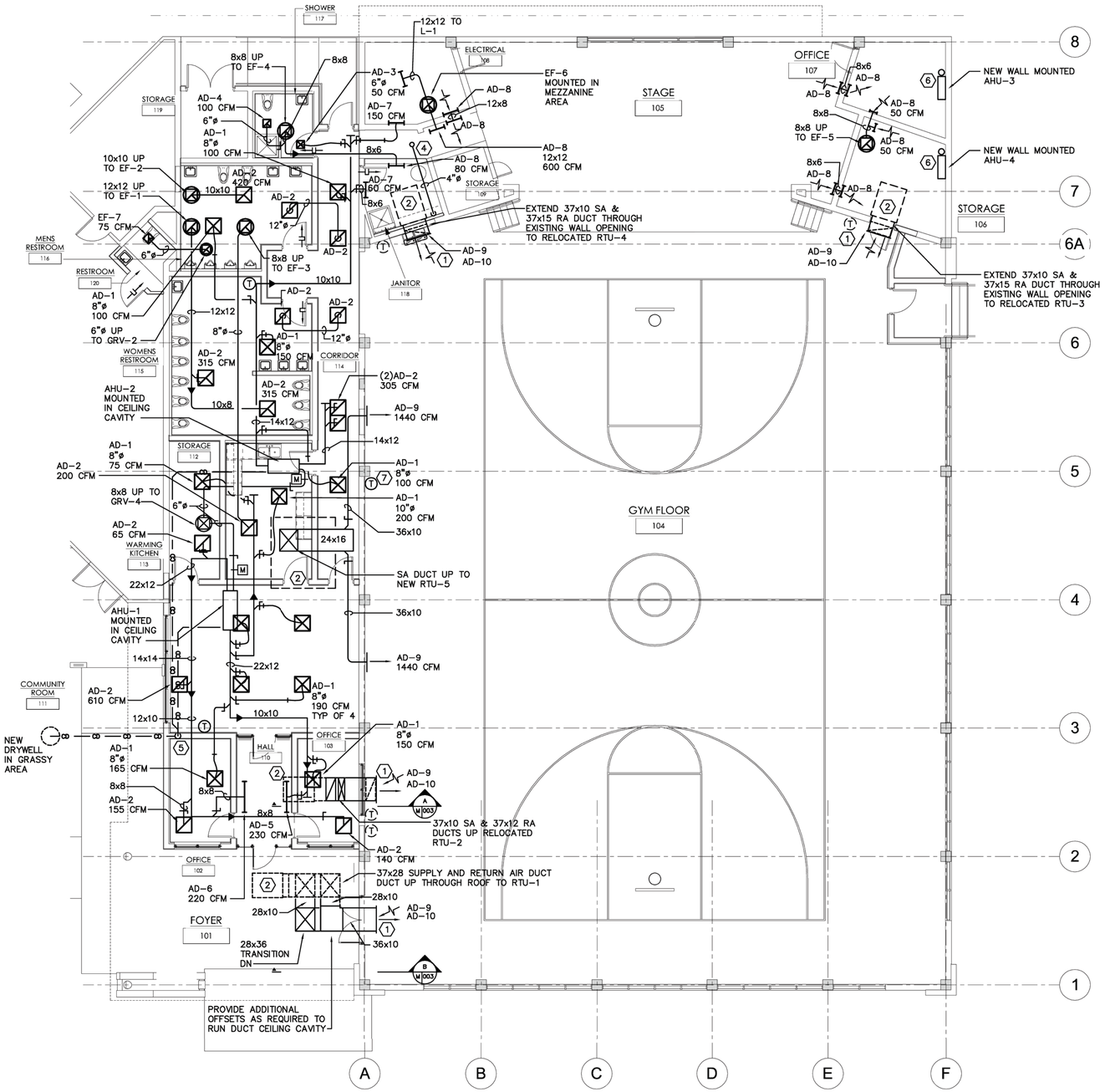

MECHANICAL PLAN

SCALE: 1/8"=1'-0" /14202

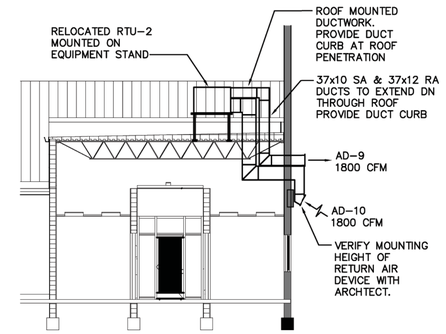

SECTION A

SCALE: 1/8"=1'-0" /14202

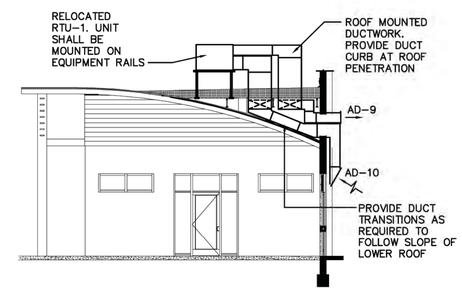

SECTION B

SCALE: 1/8"=1'-0" /14202

KEYED NOTES:

1. SEE SECTION A FOR TYPICAL EXPOSED DUCTWORK ARRANGEMENT IN GYM AREA. SUPPLY AIR DEVICE AD-9 SHALL BE BALANCED TO 1800 SUPPLY CFM AND RETURN AIR DEVICE SHALL BE BALANCED TO 1800 RETURN AIR CFM.
2. ROOF MOUNTED AC UNIT SEE ROOF PLAN SHEET M-004.
3. AIR HANDLING UNIT MOUNTED IN CEILING CAVITY IN SECONDARY DRAIN PAN. UNIT SHALL BE MOUNTED HIGH ENOUGH TO ALLOW REQUIRED DRAIN PIPING SLOPE OF 1/8" PER FOOT MIN. PROVIDE CONDENSATE DRAIN AND CONDENSATE TRAP AS REQUIRED.
4. EXTEND 4"ø DRYER EXHAUST DUCT TO ROOF MOUNTED DRYER VENT WITH BACKDRAFT DAMPER FOR DRYER EXHAUST APPLICATIONS. CLOTHES DRYER EXHAUST DUCT SHALL COMPLY WITH CHAPTER 5 (SECTION 504) OF THE 5TH EDITION (2014) FLORIDA BUILDING CODE MECHANICAL FOR DOMESTIC USE. DUCT SHALL BE LISTED FOR INTENDED USE. THE MAXIMUM DEVELOPED LENGTH SHALL NOT EXCEED 25 FEET FROM THE DRYER TERMINAL TO THE OUTLET OR A DRYER EXHAUST BOOSTER FAN SYSTEM SHALL BE PROVIDED. REDUCTIONS SHALL BE TAKEN AS SPECIFIED FOR EVERY 45° AND 90° ELBOW. PROVIDE DRYER BOX MODEL 350 FOR UPWARD EXHAUST. INSTALL IN STRICT ACCORDANCE WITH MANUFACTURERS REQUIREMENTS.
5. CONDENSATE PIPING SHALL RUN DOWN IN WALL TO BELOW GRADE AND EXTEND TO NEW DRYWELL IN GRASSY AREA.
6. WALL MOUNTED AC UNIT. EXTEND CONDENSATE UP THROUGH ROOF AND EXTEND TO GUTTER
7. TEMPERATURE SENSOR FOR RTU-5 SHALL BE OFFSET 2 DEGREES F LOWER THAN THERMOSTATS FOR RTU'S 1-4.

hayes | cumming
architects

2210 central ave, suite 100
st. petersburg, fl 33712
ph 727.321.0900
fx 727.321.0903

AA26001260
hc-arc.com

ROBERT TINTERA
P.E. 46011

andrew m. hayes, aia, leed bd+c
paul v. cumming, aia, leed bd+c

©Copyright - All Rights Reserved

members of
AIA
American Institute of Architects

CONSULTANT:

DIAMONDBACK ENGINEERING
1801 North Himes Avenue
Tampa, Florida 33607
Tele. (813) 350-0080
REG. NO. EB9758
D.E. JOB #14202

CLIENT / PROJECT NAME:

CITY OF KEY WEST

RENOVATION TO

FREDERICK DOUGLASS RECREATION CENTER

111 OLIVIA STREET
KEY WEST, FL 33040

BID SET

Original drawing is 24"x36". Scale accordingly if reduced.

SHEET TITLE:

MECHANICAL PLAN

REVISIONS:

DATE ISSUED: 03/28/2016
PROJECT NO.: 12.0D01

DRAWING NUMBER:

M-003 SHEET: 59 OF 68

7/1/2013 8:47:05 AM

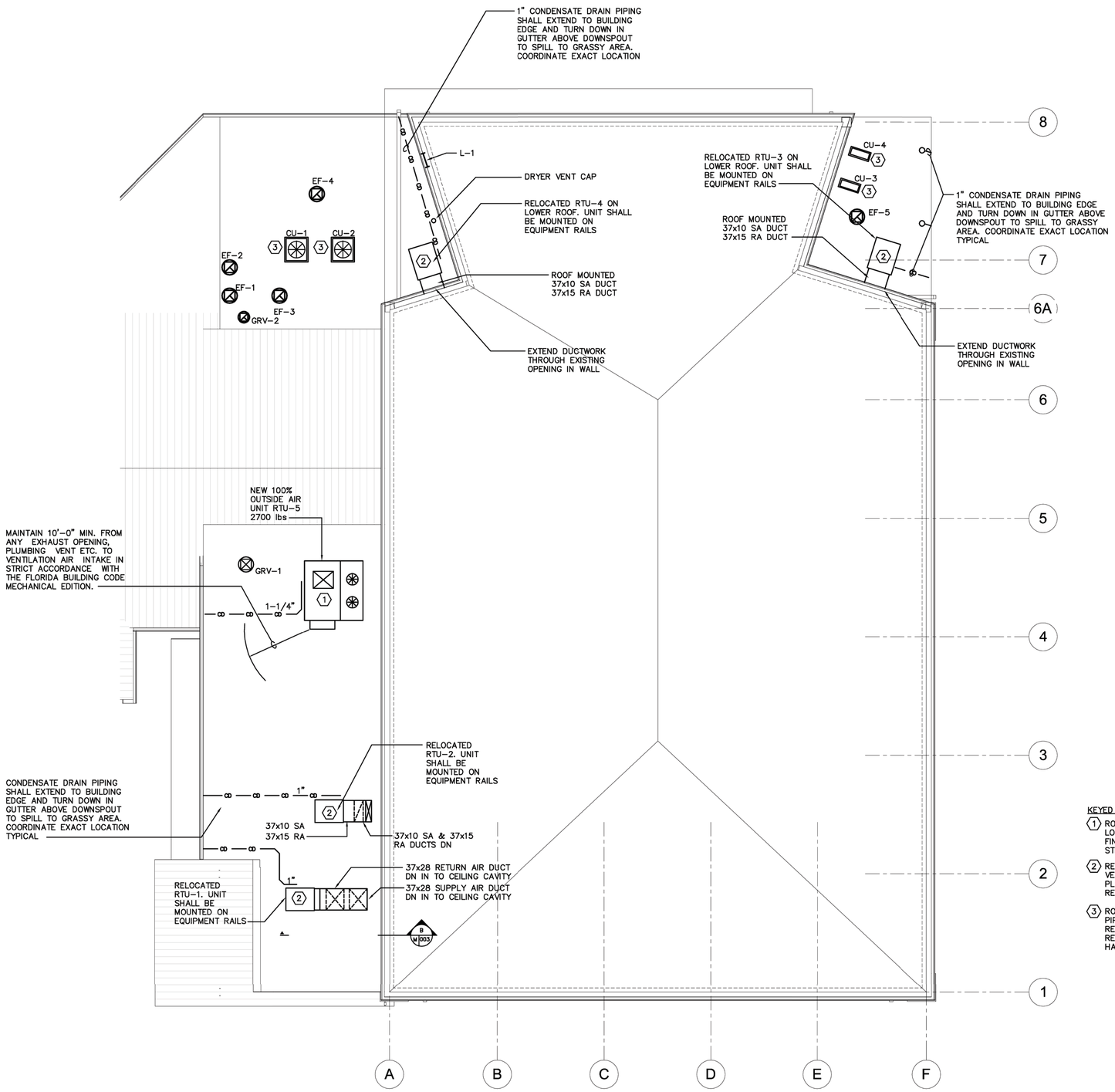

MECHANICAL ROOF PLAN

SCALE: 1/8"=1'-0" /14202

KEYED NOTES:

1. ROOF MOUNTED AC UNIT WITH MOTORIZED OUTSIDE AIR DAMPER. VERIFY EXACT LOCATION WITH STRUCTURAL ENGINEER AND ARCHITECT PRIOR TO PLACEMENT. FINAL WEIGHT AND MOUNTING REQUIREMENTS SHALL BE COORDINATED WITH STRUCTURAL ENGINEER.
2. RELOCATED ROOF MOUNTED AC UNIT WITH HORIZONTAL DISCHARGE DUCTWORK. VERIFY EXACT LOCATION WITH STRUCTURAL ENGINEER AND ARCHITECT PRIOR TO PLACEMENT. RTU SHALL BE MOUNTED ON EQUIPMENT STAND. MOUNTING REQUIREMENTS SHALL BE COORDINATED WITH STRUCTURAL ENGINEER.
3. ROOF MOUNTED CONDENSING UNIT MOUNTED ON EQUIPMENT RAILS. REFRIGERANT PIPING SHALL EXTEND FROM CONDENSING UNIT INTO CEILING CAVITY. EXTEND REFRIGERANT PIPING TO ASSOCIATED AIR HANDLING UNIT. AT NO TIME SHALL THE REFRIGERANT PIPING BE ROUTED SO THAT IT WILL INTERFERE WITH THE AIR HANDLING UNIT FILTER ACCESS OR MAINTENANCE CLEARANCES REQUIRED

hayes | cumming
architects

2210 central ave, suite 100
st. petersburg, fl 33712
ph 727.321.0900
fx 727.321.0903

AA26001260
hc-arc.com

ROBERT TINTERA
P.E. 46011

andrew m. hayes, aia, leed bd+c
paul v. cumming, aia, leed bd+c

©Copyright - All Rights Reserved

members of
AIA
American Institute of Architects

CONSULTANT:

DIAMONDBACK ENGINEERING
1801 North Himes Avenue
Tampa, Florida 33607
Tele. (813) 350-0080
REG. NO. EB9758
D.E. JOB #14202

CLIENT / PROJECT NAME:

CITY OF KEY WEST

RENOVATION TO

FREDERICK DOUGLASS RECREATION CENTER

111 OLIVIA STREET
KEY WEST, FL 33040

BID SET

Original drawing is 24"x36". Scale accordingly if reduced.

SHEET TITLE:

MECHANICAL ROOF PLAN

REVISIONS:

DATE ISSUED: 03/28/2016
PROJECT NO.: 12.0D01

DRAWING NUMBER:

M-004 SHEET: 60 OF 68

7/1/2013 8:47:05 AM

SPLIT SYSTEM AC SCHEDULE

AIR HANDLING UNIT DATA					
MARK	–	AHU–1	AHU–2	AHU–3	AHU–4
AREA SERVED	–	COMMUNITY ROOM	LOCKER ROOM	GYM OFFICE	GYM STORAGE
TOTAL CAPACITY	BTUH	48,000	29,000	5,900	5,900
SENSIBLE CAPACITY	BTUH	36,200	24,300	4,600	4,500
SUPPLY AIR	---	1575	990	200	200
OUTSIDE AIR	CFM	560	90	90	90
ENTERING AIR TEMP DB/WB	°F/°F	78/67	80/67	80/67	80/67
EXT. STATIC PRESSURE	IN. H_2O	.60	.60	–	–
MOTOR	H.P.	3/4	1/3	.76 FLA	.76 FLA
ELECTRICAL	V/ø/Hz	208/3/60	208/1/60	208/1/60	208/1/60
HEATER	KW/ STAGES	7.2	5.76	6,600 BTU/H	6,600 BTU/H
FILTER TYPE	–	1"	1"	1"	1"
WEIGHT	LBS.	200	175	22	22
MANUFACTURER	–	TRANE	TRANE	MITSUBISHI	MITSUBISHI
MODEL NO.	–	GAM5B0C48	GAM5B0C24	MSZ–GE09NA	MSZ–GE09NA
CONDENSING UNIT DATA					
MARK	–	CU–1	CU–2	CU–3	CU–4
OUTDOOR TEMP.	°F	95	95	95	95
LIQUID LINE (SIZE)	IN. O.D.	3	3	3	3
SUCTION LINE (SIZE)	IN. O.D.	3	3	3	3
ELECTRICAL	V/ø/Hz	208/3/60	208/1/60	208/1/60	208/1/60
SEER/EER	–	14 SEER	14 SEER	14 SEER	14 SEER
COMPRESSOR R.L.A.	–	14.6	8.8	6.6	6.6
WEIGHT	LBS.	250	190	66	66
MANUFACTURER	–	TRANE	TRANE	MITSUBISHI	MITSUBISHI
MODEL NO.	–	4TTA3048	4TTB4024	MUZ–GE09NA	MUZ–GE09NA
NOTES	*	1 2 4 5	1 2 4 5	6 7 8 9	6 7 8 9

* APPROVED EQUALS SHALL BE CARRIER AND YORK.

1. PROVIDE AND INSTALL IN HORIZONTAL APPLICATION WITH VIBRATION ISOLATORS AND SECONDARY DRAIN PAN. EXACT LOCATION OF UNIT SHALL BE FIELD COORDINATED TO ALLOW FULL MAINTENANCE AND FILTER ACCESS.
2. PROVIDE WITH FACTORY INSTALLED ELECTRIC HEATER, SINGLE POINT POWER CONNECTION AND 7–DAY PROGRAMMABLE THERMOSTAT WITH HUMIDITY SENSING/DEHUMIDIFICATION CONTROL TO COOL 2 DEGREES BELOW SETPOINT AND TOUCHSCREEN DISPLAY. DUAL POINT POWER CONNECTION WILL NOT BE ACCEPTED.
3. VERIFY WITH UNIT MANUFACTURER.
4. R410–A REFRIGERANT.
5. EVAPORATOR AND CONDENSER COILS SHALL BE PROVIDED WITH E–COAT CORROSION PROTECTION.

MINI–SPLIT HEAT PUMP NOTES:

6. UNIT SHALL BE WALL MOUNTED
7. PROVIDE WITH FACTORY WALL MOUNTED CONTROLLER.
8. PROVIDE CONDENSATE PUMP WITH FLOAT SWITCH SIZED FOR REQUIRED LIFT.
9. PROVIDE LOW AMBIENT COOLING CONTROL.

ROOFTOP A/C UNIT SCHEDULE

MARK	–	RTU–5
AREA SERVED	–	GYM
SUPPLY AIR	CFM	2900
OUTSIDE AIR	CFM	2900
EXT. STATIC PRESSURE	IN. H_2O	.75
MOTOR	H.P.	2
ELECTRICAL	V/ø/HZ	208/3/60
FILTER TYPE	–	2"
TOTAL COOLING CAPACITY	BTUH	288,000
SENSIBLE COOLING CAPACITY	BTUH	125,510
ENT. AIR TEMP. (DB/WB)	°F/°F	90/79
LEAVING AIR TEMP. (DB/WB)	°F/°F	47.3/47.13
HEATER	KW/STAGES	20
AMBIENT TEMP.	°F	95
EER/IEER	–	12.7
WEIGHT	LBS.	3000
MANUFACTURER	–	AAON
MODEL NO.	–	RN–025
NOTES	*	1 2 3

ALL UNITS SHALL HAVE START UP PERFORMED BY FACTORY AUTHORIZED TECHNICIAN

1. PROVIDE AND INSTALL IN DOWNFLOW CONFIGURATION. PROVIDE FACTORY ROOF CURB. ROOF CURB SHALL BE MIN. 18" HIGH TO PROVIDE THE REQUIRED CLEARANCE REQUIRED BY FBC SECTION 1509.6.5
2. PROVIDE WITH OUTSIDE AIR INTAKE WITH MOTORIZED DAMPER AND BIRDSCREEN.
3. EVAPORATOR AND CONDENSER COILS SHALL BE PROVIDED WITH E–COAT CORROSION PROTECTION.

RTU–5 ADDITIONAL NOTES:

1. PROVIDE PREMIUM EFFICIENCY MOTOR + VFD FOR SUPPLY FAN. FAN SHALL BE DIRECT DRIVE BACKWARD CURVED PLENUM
2. PROVIDE STAINLESS STEEL DOUBLE–SLOPED CONDENSATE DRAIN PAN
3. PROVIDE FACTORY INSTALLED MODULATING HOT GAS REHEAT
4. PROVIDE LOW AMBIENT OPERATION TO 0 DEG F
5. PROVIDE ALL UNITS WITH FACTORY INSTALLED PHASE FAILURE PROTECTION
6. PROVIDE SPACE TEMPERATURE SENSOR.
7. PROVIDE WATT MASTER VCM–X CONTROLS WITH PROGRAMMABLE SCHEDULE

FAN SCHEDULE

MARK	–	EF–1	EF–2	EF–3	EF–4	EF–5	EF–6	EF–7
SERVICE	–	EXHUAST	EXHUAST	EXHUAST	EXHUAST	EXHUAST	EXHUAST	EXHAUST
AREA SERVED	–	WOMEN'S RESTROOMS	MEN'S RESTROOMS	SHOWER 117	WARMING KITCHEN	GYM OFFICES	GYM	RESTROOM 120
AIR QUANTITY	CFM	630	420	180	200	100	800	75
EXT. STATIC PRESS.	IN. H_2O	.375	.375	.375	.375	.375	.375	.25
FAN TYPE	–	CENTRIFUGAL	CENTRIFUGAL	CENTRIFUGAL	CENTRIFUGAL	CENTRIFUGAL	INLINE	CEILING
DRIVE	–	DIRECT	DIRECT	DIRECT	DIRECT	DIRECT	DIRECT	DIRECT
SONES	–	5.5	5.3	3.5	3.5	3.5	5.6	1.1
MOTOR	H.P./WATTS	1/4	1/6	1/6	1/6	1/6	1/6	48.7 WATTS
MOTOR SPEED	RPM	1300	1300	1300	1300	1300	1300	1110
ELECTRICAL	V/ø/HZ	120/1/60	120/1/60	120/1/60	120/1/60	120/1/60	120/1/60	120/1/60
CONTROL	–	SWITCH WITH LIGHTS	SWITCH WITH LIGHTS	SWITCH WITH LIGHTS	WALL SWITHC WITH TIMER	WALL SWITCH WITH TIMER	INTERLOCK WITH RTU–5	SWITCH WITH LIGHTS
MANUFACTURER	–	GREENHECK	GREENHECK	GREENHECK	GREENHECK	GREENHECK	GREENHECK	GREENHECK
MODEL	–	VG–090	VG–090	VG–075	VG–075	VG–070	BDF–90	SPA–110
NOTES	*	1 2	1 2	1 2	1 2	1 2	2 4	2 3

* APPROVED EQUALS SHALL BE COOK AND PENN.

1. PROVIDE AND INSTALL WITH DISCONNECT, BACKDRAFT DAMPER, FLORIDA PRODUCT APPROVED/MIAMI DADE HIGH WIND CONSTRUCTION, INSULATED ROOF CURB AND BIRD SCREEN. TIME DELAY SHALL BE SET AT 15 MINUTES.
2. PROVIDE AND INSTALL SOLID STATE SPEED CONTROL AT FAN FOR BALANCING.
3. PROVIDE AND INSTALL WITH DISCONNECT, BACKDRAFT DAMPER, VARIABLE SPEED CONTROLLER, AND WHITE EXHAUST GRILLE. TIME DELAY SHALL BE SET AT 15 MINUTES.
4. PROVIDE AND INSTALL WITH DISCONNECT AND BACKDRAFT DAMPER

AIR DEVICE SCHEDULE

MARK	TYPE	MATERIAL	FINISH	MANUFACTURER AND MODEL	REMARKS
AD–1	CEILING SUPPLY	ALUMINUM	WHITE BAKED ENAMEL	TITUS OMNI–AA	1
AD–2	CEILING RET./EXH.	ALUMINUM	WHITE BAKED ENAMEL	TITUS 350FL	2
AD–3	CEILING SUPPLY	ALUMINUM	WHITE BAKED ENAMEL	TITUS OMNI–AA	3
AD–4	CEILING RET./EXH.	ALUMINUM	WHITE BAKED ENAMEL	TITUS 350FL	4
AD–5	LINEAR SUPPLY	ALUMINUM	WHITE BAKED ENAMEL	TITUS ML–39	5
AD–6	LINEAR RET./EXH.	ALUMINUM	WHITE BAKED ENAMEL	TITUS ML–39	6
AD–7	SIDEWALL SUPPLY	ALUMINUM	WHITE BAKED ENAMEL	TITUS 300FL	7
AD–8	SIDEWALL RET./EXH.	ALUMINUM	WHITE BAKED ENAMEL	TITUS 350FL	8
AD–9	SIDEWALL SUPPLY	ALUMINUM	WHITE BAKED ENAMEL	TITUS 272 FS	9
AD–10	SIDEWALL RET./EXH.	ALUMINUM	WHITE BAKED ENAMEL	TITUS 56FS	10

* APPROVED EQUALS SHALL BE PRICE AND METALAIRE

NOTE:
ALL AIR DEVICE FRAME TYPES AND MOUNTING REQUIREMENTS SHALL BE COORDINATED WITH CEILING TYPE AND SUSPENSION SYSTEM PRIOR TO ORDERING.

1. PROVIDE 24x24 MODULE WITH ROUND NECK TRANSITION. SEE PLANS FOR NECK SIZES. PROVIDE DIRECTIONAL BLOW CLIPS FOR DIFFUSERS SHOWN TO BE 1–WAY, 2–WAY OR 3–WAY DIRECTIONAL AIRFLOW PATTERN
2. PROVIDE 24x24 MODULE, WITH 22x22 NECK.
3. PROVIDE 12x12 MODULE WITH ROUND NECK TRANSITION. SEE PLAN FOR NECK SIZES.
4. PROVIDE 12x12 MODULE WITH 10x10 NECK.
5. PROVIDE 4' LONG, 2 SLOT DIFFUSER WITH MPI–39 INSULATED PLENUM HOUSING
6. PROVIDE 4' LONG, 2 SLOT DIFFUSER WITH MPI–39 INSULATED PLENUM HOUSING
7. DUCT SIZE DICTATES FACE SIZE. REFER TO PLANS FOR DUCT SIZE
8. DUCT SIZE DICTATES FACE SIZE. REFER TO PLANS FOR DUCT SIZE
9. PROVIDE 36x10 NOMINAL DUCT SIZE SUPPLY AIR DEVICE
10. PROVIDE 36x20 NOMINAL DUCT SIZE RETURN AIR DEVICE

ROOF CAP SCHEDULE

MARK	–	GRV–1
AIR QUANTITY	CFM	300
SIZE	L x W	---
THROAT	WIDTHxLENGTH	15"ø
VELOCITY	FPM	500
PRESSURE DROP	IN. H_2O	.125
MATERIALS	–	---
MANUFACTURER	–	GREENHECK
MODEL	–	RCC–8
NOTES	*	

PROVIDE HIGH WIND/MIAMI DADE CONSTRUCTION, INSULATED ROOF CURB AND BIRD SCREEN.

LOUVER SCHEDULE

MARK	L–1
SQUARE FEET FREE AREA	1.38
WIDTH X HEIGHT (INCHES)	24x24
MAX. VELOCITY (FPM)	600
THICKNESS (INCHES)	6
MATERIAL	ALUMINUM
MANUFACTURER	GREENHECK
MODEL NUMBER	EVH–660D
NOTE *	1 2

1. LOUVER SHALL BE FLORIDA PRODUCT/MIAMI DADE APPROVED.
2. PROVIDE BIRD/INSECT SCREEN AND FLANGED FRAME. COLOR AND FINISH SHALL BE BY ARCHITECT. COORDINATE FINAL WALL OPENING REQUIREMENTS WITH ARCHITECT

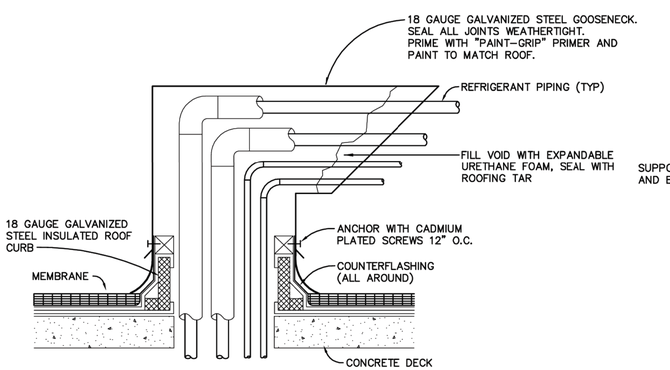

NOTE:
1. REFER TO DRAWINGS FOR QUANTITY AND SIZE OF PIPES TO RUN THRU CURB.

PIPING ROOF CURB DETAIL
SCALE: NTS /14202

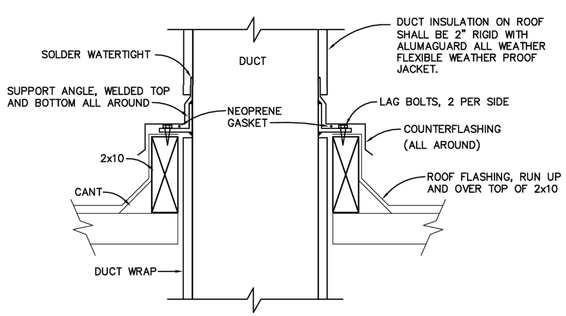

NOTE: ALUMAGUARD ALL WEATHER FLEXIBLE WEATHER PROOF JACKET SHALL BE INSTALLED IN STRICT ACCORDANCE WITH MANUFACTURER'S REQUIREMENTS.

DUCT CURB DETAIL
SCALE: NTS /14202

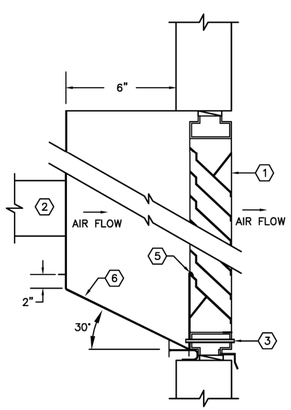

KEYED NOTES:

1. FLORIDA PRODUCT/MIAMI DADE APPROVED LOUVER
2. HVAC DUCT CONNECTION, SEE HVAC PLAN FOR SIZES
3. 1/2" DRAIN TUBE.
4. DRAIN TUBE SHALL BE WELDED LIQUID–TIGHT TO PLENUM.
5. INSIDE OF PLENUM SHALL SLIP OVER TOP OF BOTTOM–MOST LOUVER BLADE.
6. CONTINUOUS PIECE OF SHEETMETAL. PLENUM SHALL BE FULL SIZE OF LOUVER.

GENERAL NOTES:

1. PLENUM SHALL BE GALVANIZED METAL.

INTAKE LOUVER DETAIL
SCALE: NTS /14202

hayes | cumming
architects

2210 central ave, suite 100
st. petersburg, fl 33712
ph 727.321.0900
fx 727.321.0903

AA26001260
hc-arc.com

ROBERT TINTERA
P.E. 46011

andrew m. hayes, aia, leed bd+c
paul v. cumming, aia, leed bd+c

© Copyright - All Rights Reserved

members of
AIA
American Institute of Architects

CONSULTANT:

DIAMONDBACK ENGINEERING
1801 North Himes Avenue
Tampa, Florida 33607
Tele. (813) 350-0080
REG. NO. EB9758
D.E. JOB #14202

CLIENT / PROJECT NAME:

CITY OF KEY WEST

RENOVATION TO

FREDERICK DOUGLASS RECREATION CENTER

111 OLIVIA STREET
KEY WEST, FL 33040

BID SET

Original drawing is 24"x36". Scale accordingly if reduced.

SHEET TITLE:

MECHANICAL SCHEDULES

REVISIONS:

DATE ISSUED: 03/28/2016
PROJECT NO.: 12.0D01

DRAWING NUMBER:

M-005 SHEET: 61 OF 68

7/1/2013 8:47:05 AM

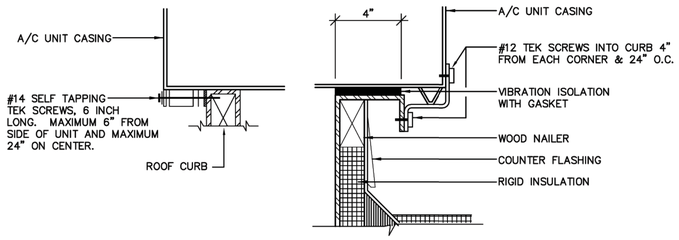

NOTE: SEE ARCHITECTURAL AND STRUCTURAL PLANS FOR EQUIPMENT CURB MOUNTING DETAILS.

RTU ANCHORING DETAILS

SCALE: NTS /14202

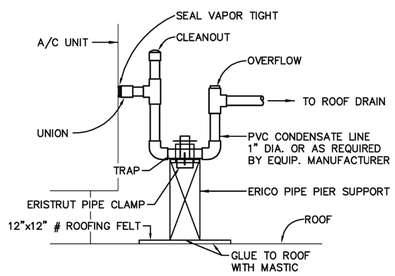

A/C CONDENSATE DETAIL

SCALE: NTS 14202

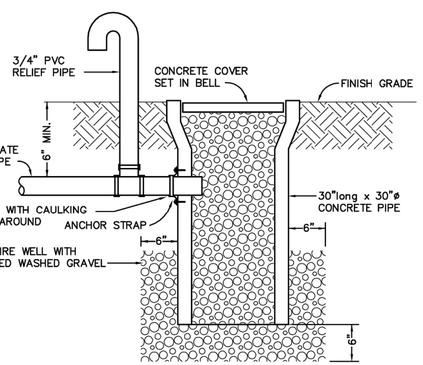

DRYWELL DETAIL

SCALE: NTS 14202

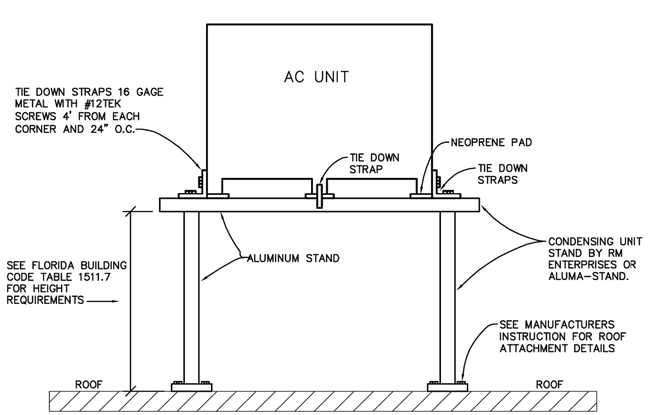

CONDENSING UNIT SUPPORT DETAIL

SCALE: NTS 14202

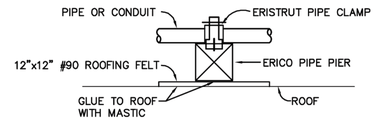

ROOF CONDENSATE PIPE SUPPORT

SCALE: NTS 14202

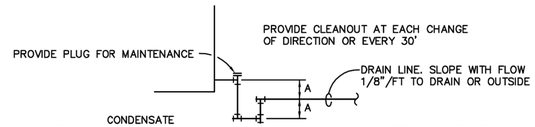

MAX. TONS	CONDENSATE PIPE SIZE
2	3/4"
5	1"
30	1 1/4"
50	1 1/2"

A = TOTAL FAN SUCTION PRESSURE + 1 INCH

CONDENSATE DRAIN TRAP DETAIL

SCALE: NTS 14202

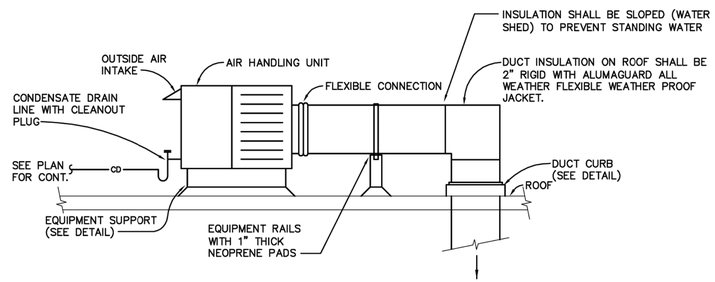

NOTE: ALUMAGUARD ALL WEATHER FLEXIBLE WEATHER PROOF JACKET SHALL BE INSTALLED IN STRICT ACCORDANCE WITH MANUFACTURER'S REQUIREMENTS.

ROOFTOP UNIT WITH HORIZONTAL DUCT DISCHARGE MOUNTING DETAIL

SCALE: NTS 14202

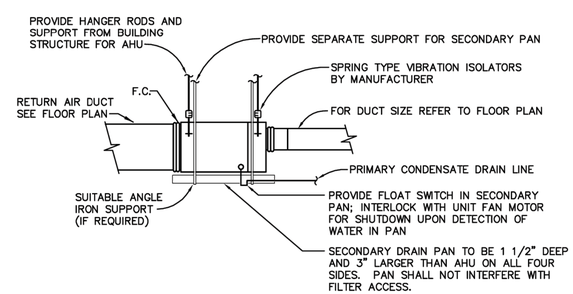

AIR HANDLING UNIT MOUNTING DETAIL

SCALE: NTS 14202

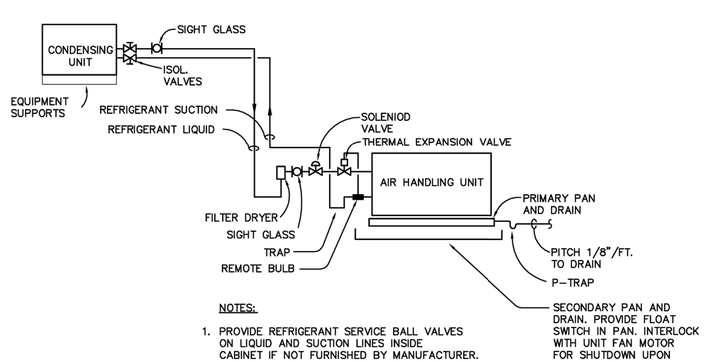

NOTES:

1. PROVIDE REFRIGERANT SERVICE BALL VALVES ON LIQUID AND SUCTION LINES INSIDE CABINET IF NOT FURNISHED BY MANUFACTURER.
2. REFRIGERANT LINES SHALL BE SIZED IN ACCORDANCE WITH MANUFACTURER'S RECOMMENDATIONS FOR LENGTHS REQUIRED.

REFRIGERANT PIPING DIAGRAM

SCALE: NTS 14202

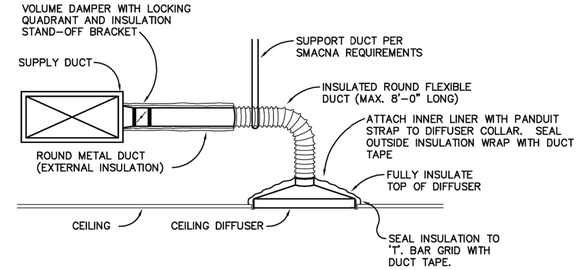

NOTE:
TAKE-OFF FITTING EQUAL TO FLEXMASTER STO-LDS-B03 OR FLEXMASTER CB-D-B03. VOLUME DAMPER BLADES SHALL BE MINIMUM 24 GAUGE CONSTRUCTION

CEILING DIFFUSER RUNOUT DETAIL

SCALE: NTS 14202

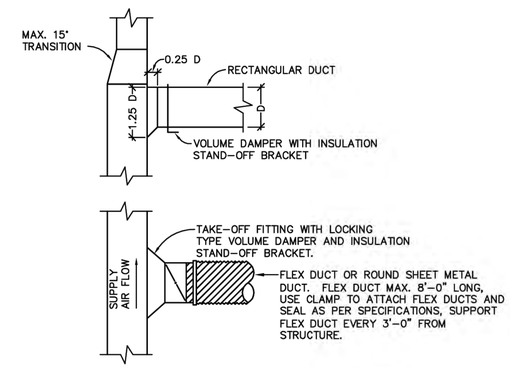

NOTE:
TAKE-OFF FITTING EQUAL TO FLEXMASTER STO-LDS-B03 OR FLEXMASTER CB-D-B03. VOLUME DAMPER BLADES SHALL BE MINIMUM 24 GAUGE CONSTRUCTION

BRANCH DUCT DETAILS

SCALE: NTS 14202

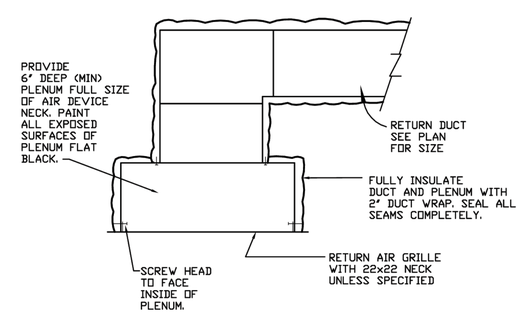

RETURN AIR DUCTWORK/AIR DEVICE CONNECTION DETAIL

SCALE: NTS 14202

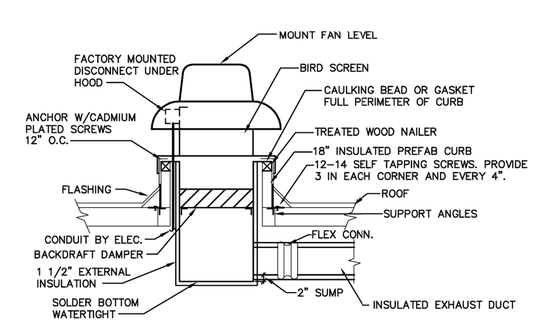

ROOF EXHAUST FAN DETAIL

SCALE: NTS /14202

hayes | cumming
architects

2210 central ave, suite 100
st. petersburg, fl 33712
ph 727.321.0900
fx 727.321.0903

AA26001260
hc-arc.com

ROBERT TINTERA
P.E. 46011

andrew m. hayes, aia, leed bd+c
paul v. cumming, aia, leed bd+c

©Copyright - All Rights Reserved

members of
AIA
American Institute of Architects

CONSULTANT:

DIAMONDBACK ENGINEERING
1801 North Himes Avenue
Tampa, Florida 33607
Tele. (813) 350-0080
REG. NO. EB9758
D.E. JOB #14202

CLIENT / PROJECT NAME:

CITY OF KEY WEST

RENOVATION TO

FREDERICK DOUGLASS RECREATION CENTER

111 OLIVIA STREET
KEY WEST, FL 33040

BID SET

Original drawing is 24"x36". Scale accordingly if reduced.

SHEET TITLE:

MECHANICAL DETAILS

REVISIONS:

DATE ISSUED: 03/28/2016
PROJECT NO.: 12.0D01

DRAWING NUMBER:

M-006 SHEET: 62 OF 68

7/1/2013 8:47:05 AM

GENERAL NOTES:

1. DO NOT SCALE FROM THESE DRAWINGS. CONDUIT RUNS SHOWN ARE DIAGRAMMATIC IN NATURE. CONTRACTOR IS RESPONSIBLE FOR SIZING AND LOCATING ALL PULL BOXES PER LOCAL AND NATIONAL CODE REQUIREMENTS. ALL PULL BOXES SHALL REMAIN ACCESSIBLE, COORDINATE PULL BOX LOCATIONS WITH ALL TRADES.
2. ALL WORK SHALL BE DONE IN STRICT ACCORDANCE WITH THE LATEST REQUIREMENTS OF THE NATIONAL ELECTRIC CODE, LOCAL UTILITY COMPANY'S REQUIREMENTS AND ALL LOCAL CODES AND ORDINANCES HAVING JURISDICTION.
3. WHERE NON-FUSED DISCONNECT IS NOT PROVIDED WITHIN SIGHT OF MOTOR (OR HEATER UNIT) FEEDER (AND/OR BRANCH CIRCUIT) OVER-CURRENT DEVICE SERVING SUCH MOTOR (OR HEATER) SHALL HAVE APPROVED "LOCK-OFF" PROVISION.
4. REFERENCE MECHANICAL DRAWINGS FOR ALL MECHANICAL EQUIPMENT NEEDING ELECTRICAL CONNECTIONS. MAKE ALL CONNECTIONS AND PROVIDE APPROPRIATE WIRE, CONDUIT AND OVERCURRENT PROTECTION FOR ALL EQUIPMENT. COORDINATE EXACT REQUIREMENTS WITH MECHANICAL CONTRACTOR PRIOR TO INSTALLATION.
5. ALL WIRING NOT INSTALLED IN CONDUIT OR IN CABLE TRAY SHALL BE BUNDLED AND SUPPORTED BY STRUCTURE, CONDUIT SHALL NOT SERVE AS A SUPPORT.
6. ALL BRANCH CIRCUIT WIRING SHALL BE A MINIMUM #12 THWN COPPER UNLESS OTHERWISE NOTED.
7. COPPER EQUIPMENT GROUND CONDUCTORS ARE REQUIRED IN ALL RACEWAYS. REGARDLESS OF RACEWAY TYPE. EQUIPMENT GROUND CONDUCTORS SHALL BE SIZED IN ACCORDANCE WITH N.E.C. 250-122. BOND TO ALL EQUIPMENT IN ACCORDANCE WITH N.E.C. REQUIREMENTS.
8. DISCONNECT SWITCHES FOR ALL MECHANICAL EQUIPMENT MOUNTED OUTDOORS SHALL BE NEMA 3R. PROVIDE CONNECTION TO UNIT WITH FLEXIBLE METALLIC WEATHERPROOF CONDUIT NOT LONGER THAN 6 FEET.
9. ALL BRANCH CIRCUIT WIRING TO 120 VOLT LIGHTING FIXTURES AND RECEPTACLES SHALL BE AS FOLLOWS:
   MAXIMUM LENGTH 85FT. – 2 #12, 1 #12 E.G.
   MAXIMUM LENGTH 140FT. – 2 #10, 1 #10 E.G.
   MAXIMUM LENGTH 225FT. – 2 #8, 1 #10 E.G.
   MAXIMUM LENGTH 350FT. – 2 #6, 1 #10 E.G.
10. MINIMUM CONDUIT SIZE 3/4".

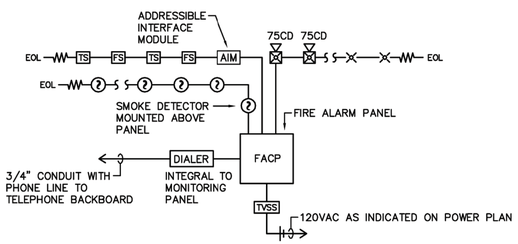

NOTES: NEW FIRE ALARM SYSTEM SHALL REPLACE EXISTING NOTIFIER SPF-1024 WHICH SERVES EXISTING GYM COMPLEX ADJACENT CLINIC AND MUSIC STUDIO. CONNECT ALL EXISTING NOTIFICATION APPLIANCE AND INITIATION DEVICES TO NEW SYSTEM AS REQUIRED.

FIRE ALARM RISER DIAGRAM

SCALE: NTS /14202

DEMOLITION:

1. REMOVE EXISTING WIRING AND EQUIPMENT/DEVICES WHICH ARE NOT NECESSARY FOR THE FUNCTION OF NEW EQUIPMENT/DEVICES AND THE FUNCTIONS OF EXISTING EQUIPMENT/DEVICES REMAINING.
2. REMOVE ABANDONED WIRING ENTIRELY UNLESS NOTED AND REMOVE ACCESSIBLE RACEWAYS.
3. CUT, CAP AND PATCH OVER CONCEALED CONDUITS AT POINT OF EMERGENCE.
4. EXISTING EQUIPMENT AND MATERIALS THAT ARE REMOVED SHALL NOT BE REUSED EXCEPT WHERE SPECIFICALLY NOTED.
5. DISPOSE OF SCRAP AND DEBRIS. MAINTAIN ELECTRICAL CONTINUITY TO EQUIPMENT/DEVICES WHICH SHALL REMAIN.
6. CONTRACTORS SHALL BE GUIDED BY OWNER'S REPRESENTATIVE, THE ARCHITECT AND THE ENGINEER AS TO THE REQUIREMENT FOR THE REMOVAL OF EQUIPMENT/ DEVICES WHICH MAY NOT BE INDICATED.
7. REMOVE EXISTING WIRING DEVICES AS REQUIRED FOR THE REMOVAL OF WALLS AND/OR THE INSTALLATION OF NEW WALL FINISHES.
8. WHERE DEVICES ARE REMOVED, CONTRACTOR SHALL ALSO REMOVE OUTLET BOX, CONDUCTORS, CONDUIT AND MOUNTING HARDWARE. EXCEPTION TO THIS REQUIREMENT MAY BE WHERE CONTRACTOR PROPOSES TO RE-USE CONDUIT CONCEALED OR OUTLET BOX RECESSED IN EXISTING WALL OR FLOOR SLAB FOR NEW WORK IF APPROVED IN ADVANCE BY THE ARCHITECT/ENGINEER.
9. WHERE WALLS ARE TO BEING REMOVED CONTRACTOR SHALL REMOVE EXISTING RECEPTACLES, DATA/TELEPHONE OUTLETS, CONDUIT, WIRING, ETC. REMOVE CONDUCTORS BACK TO PANEL AND CIRCUIT BREAKER MADE SPARE. CONTRACTOR SHALL MAINTAIN CONTINUITY TO EXISTING RECEPTACLES REMAINING. SEE ARCHITECTURAL DRAWINGS FOR WALLS TO BE REMOVED.
10. WHERE EXISTING RECEPTACLES ARE TO BE REMOVED FROM PARTITIONS BEING REMOVED, CONTRACTOR SHALL MAINTAIN SERVICE TO REMAINING OUTLETS.
11. EXIT LIGHTING FIXTURES AND EMERGENCY LIGHTING UNITS SHALL BE CHECKED FOR PROPER OPERATION OF BATTERY BACK-UP. CONTRACTOR SHALL REPLACE FAULTY BATTERIES AND LAMPS AS REQUIRED.

FIRE ALARM SYSTEM:

1. COMPLETE ADDRESSABLE, MICROPROCESSOR – BASED FIRE DETECTION AND CONTROL SYSTEM WITH MANUAL AND AUTOMATIC ALARM INITIATION, NOTIFICATION APPLIANCES, MONITORING AND CONTROL DEVICES AS INDICATED ON THE DRAWINGS AND AS SPECIFIED HEREIN.
2. SIGNAL TRANSMISSION: SHALL BE ADDRESSABLE TRANSMISSION DEDICATED TO FIRE ALARM SERVICE ONLY.
3. AUDIBLE ALARM INDICATION: BY SOUNDING HORNS.
4. TRANSMISSION TO REMOTE CENTRAL STATION: AUTOMATICALLY ROUTE ALARM. SUPERVISORY AND TROUBLE SIGNALS TO A REMOTE CENTRAL STATION SERVICE TRANSMITTER LOCATION IN FACP.
5. UPON ACTIVATION OF THE FIRE ALARM SYSTEM BY AN ALARM INITIATING DEVICE THE FOLLOWING SHALL OCCUR:
   1. SOUND THE AUDIBLE FIRE ALARM SIGNALS THROUGHOUT THE BUILDING.
   2. FLASH THE VISUAL FIRE ALARM SIGNALS THROUGHOUT THE BUILDING.
   3. A ZONE INDICATION ON ALPHA NUMERIC DISPLAY SHALL INDICATE ACTIVATED DEVICE ON FACP AND REMOTE ANNUNCIATOR.
   4. SIEZE TELEPHONE LINE, ALERT THE LOCAL FIRE DEPARTMENT VIA THE OWNER PROVIDED MONITORING SERVICE.
   5. SHUTDOWN ALL AIR MOVEMENT IN BUILDING.
   6. TAMPER SWITCHES SHALL SOUND TROUBLE SIGNAL.
6. THE FIRE ALARM SYSTEM SHALL BE MANUFACTURED BY NOTIFIER AND BE NFS-320 INTELLIGENT FIRE ALARM CONTROL PANEL WITH NEMA 1 ENCLOSURE.
7. FIRE ALARM SMOKE DETECTOR FOR FACP SHALL BE SIMILAR TO NOTIFIER FSP-851 WITH APPROPRIATE BASE.
8. FIRE ALARM DIALER SHALL BE INTEGRAL TO THE FACP AND BE NOTIFIER UDACT SERIES. PROVIDE REQUIRED RJ-31X INTERCONNECTION TO TELEPHONE SYSTEM.
9. PULLSTATIONS SHALL BE NOTIFIER NBG-12LX ADDRESSABLE MANUAL PULLSTATION.
10. 24 HOURS OF BATTERY BACKUP WITH 5 MINUTES OF ALARM SHALL BE PROVIDED.
11. ALL FIRE ALARM WIRING SHALL BE 1/2" MINIMUM CONDUIT.
12. ALL SLC WIRING SHALL BE #14 UNSHIELDED TWISTED PAIR SIMILAR TO GENESIS 4313 FPLR.
13. ALL 120 VAC FIRE ALARM POWER SHALL BE PROVIDED WITH TRANSIENT VOLTAGE SURGE SUPPRESSION (TVSS). MOUNT IN NEMA 1 ENCLOSURE. DITEK-DTK-120S20A.
14. ADDRESSIBLE INTERFACE MODULE SHALL BE NOTIFIER FMM-1 MOUNTED TO SUITABLE J-BOX.
15. AUDIBLE VISUAL APPLIANCES SHALL BE SYSTEM SENSOR SPECTRALERT ADVANCE SERIES. HORNS SHALL BE WHITE IN COLOR, COMBINATION APPLIANCES SHALL BE RED.

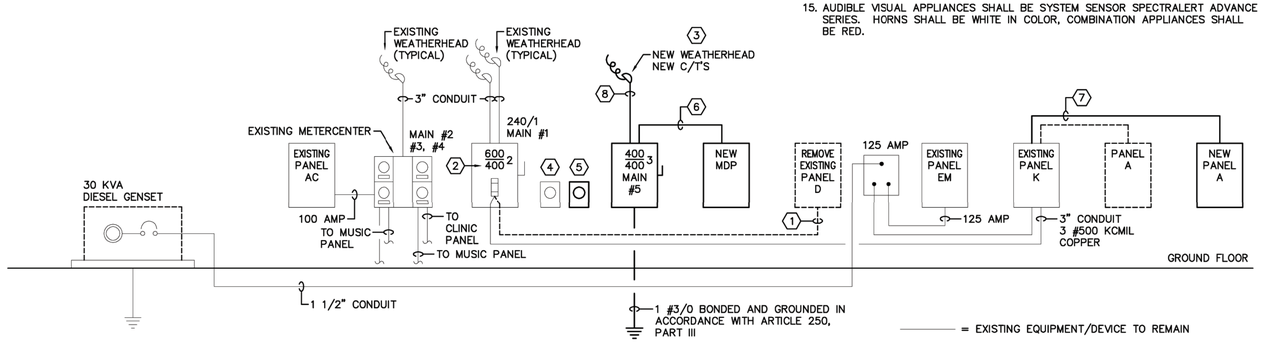

KEYED NOTES:

1. REMOVE EXISTING FEEDER CUT CONDUIT BACK FLUSH WITH GRADE CAP.
2. REMOVE 600 AMP FUSE, INSTALL 400 AMP FUSE.
3. C/T'S AT OVERHEAD PER UTILITIES REQUIREMENT.
4. EXISTING KWH METER.
5. NEW KWH METER.
6. NEW 400 AMP FEEDER, 3 #500KCMIL, 1 #3 E.G. IN 3 1/2" EMT CONDUIT
7. NEW 100 AMP FEEDER, 2 #3, 1 #8 E.G. IN 1 1/4" CONDUIT
8. 3 1/2" RIGID GALVANIZED STEEL CONDUIT WITH 3 #500KCMIL COPPER.

POWER RISER DIAGRAM

SCALE: NTS /14202

= EXISTING EQUIPMENT/DEVICE TO REMAIN

= NEW EQUIPMENT/DEVICE

= EQUIPMENT/DEVICE TO BE REMOVED

ELECTRICAL SYMBOL LEGEND

SYMBOL	DESCRIPTION	MOUNTING
	RECESSED CEILING MOUNTED DOWNLIGHT, LETTER INDICATES TYPE	SEE FIXTURE SCHEDULE
	RECESSED CEILING MOUNTED DOWNLIGHT ON EMERGENCY GENERATOR, LETTER INDICATES TYPE	SEE FIXTURE SCHEDULE
	2'x4' FLUORESCENT FIXTURE, LETTER INDICATES TYPE.	SEE FIXTURE SCHEDULE
	2'x4' FLUORESCENT FIXTURE ON EMERGENCY GENERATOR, LETTER INDICATES TYPE NL = NIGHTLIGHT	SEE FIXTURE SCHEDULE
	LED FIXTURE HUNG WITH AIRCRAFT CABLE, LETTER INDICATES TYPE.	SEE FIXTURE SCHEDULE
	LED FIXTURE HUNG WITH AIRCRAFT CABLE ON EMERGENCY GENERATOR, LETTER INDICATES TYPE. NL = NIGHTLIGHT	SEE FIXTURE SCHEDULE
	FLUORESCENT STRIP FIXTURE, LETTER INDICATES TYPE	SEE FIXTURE SCHEDULE
	EXIT LIGHT WITH INDICATING ARROW, LETTER INDICATES TYPE	SEE FIXTURE SCHEDULE
S	SINGLE POLE SWITCH (20 AMP) GROUNDING TYPE	FLUSH IN WALL M.H. 48" AFF TO CENTERLINE
S°	SWITCH WITH OCCUPANCY SENSOR – WATT STOPPER DSW-100	FLUSH IN WALL M.H. 48" AFF TO CENTERLINE
S^OR	AFTER HOURS OVER-RIDE SWITCH, 4 SQUARE BACKBOX, SINGLE GANG PLASTER RING AND 1" CONDUIT TO 6" ABOVE ACCESSIBLE CEILING, PROVIDE END BUSHING	FLUSH IN WALL M.H. 48" AFF TO CENTERLINE
S^T	TWIST TIMER	FLUSH IN WALL M.H. 48" AFF TO CENTERLINE
	DUPLEX RECEPTACLE (20A., 125V.) GROUNDING TYPE	M.H. 18" AFF TO CENTERLINE
	DUPLEX RECEPTACLE (20 AMP, 125V.) GROUNDING TYPE	MOUNTED ABOVE COUNTER OR AS NOTED
	TWO (2) DUPLEX RECEPTACLES, (20A., 125V.) IN COMMON BOX	M.H. 18" AFF TO CENTERLINE
	TWO (2) DUPLEX RECEPTACLES, (20A., 125V.) IN COMMON BOX	MOUNTED ABOVE COUNTER OR AS NOTED
F	FLOOR OUTLET WITH DUPLEX RECEPTACLE. WALKER #880S1 FLUSH FLOOR BOX, #817B SINGLE GANG BRASS CARPET AND TILE FLANGE. PROVIDE #828R BRASS COVER PLATE	FLUSH
	DRYER RECEPTACLE, NEMA 14-30R	FLUSH IN WALL M.H. 18" AFF TO CENTERLINE
	VOICE/DATA OUTLET, 4 SQUARE BACKBOX, SINGLE GANG PLASTER RING AND 1" CONDUIT TO 6" ABOVE ACCESSIBLE CEILING, PROVIDE END BUSHING	M.H. 18" AFF TO CENTERLINE
	VOICE/DATA OUTLET, 4 SQUARE BACKBOX, SINGLE GANG PLASTER RING AND 1" CONDUIT TO 6" ABOVE ACCESSIBLE CEILING, PROVIDE END BUSHING	MOUNTED ABOVE COUNTER OR AS NOTED
	PANELBOARD	M.H. 6'-6" AFF MAX. TO TOP
	TELEPHONE PLYWOOD BOARD (4'x8'x3/4")	
	JUNCTION BOX OR OUTLET BOX, 4" SQUARE BOX UNLESS OTHERWISE NOTED	SEE SPECIFICATIONS
	RACEWAY CONCEALED IN WALL OR CEILINGS	SEE SPECIFICATIONS
	RACEWAY CONCEALED UNDER FLOOR OR BELOW GRADE	SEE SPECIFICATIONS
	RACEWAY EXPOSED ON WALL OR CEILING	SEE SPECIFICATIONS
L1A-1,3	HOMERUN TO PANEL, LETTERS INDICATE PANEL, NUMBERS INDICATE CIRCUIT. NOTE: ANY CIRCUIT WITHOUT FURTHER DESIGNATION INDICATES A TWO WIRE CIRCUIT. A GREATER NUMBER OF WIRES IS INDICATED AS SHOWN: (3 WIRES & EQUIPMENT GROUND), (4 WIRES & EQUIPMENT GROUND), ETC.	SEE SPECIFICATIONS
	MOTOR OR FAN	BY OTHER DIVISION
	NON-FUSIBLE SAFETY SWITCH	SEE SPECIFICATIONS
	FUSIBLE SAFETY SWITCH	SEE SPECIFICATIONS
R	FAN OR AIR HANDLER SHUTDOWN RELAY	ADJACENT TO EQUIP.
	FLORIDA ACCESSIBILITY CODE COMPLIANT FIRE ALARM STROBE WITH HORN CANDELA INTENSITY INDICATED ADJACENT TO DEVICE	MOUNTED 80" TO BOTTOM OF LENS OR 6" BELOW CEILING WHICHEVER IS LOWER
	FLORIDA ACCESSIBILITY CODE COMPLIANT FIRE ALARM STROBE CANDELA INTENSITY INDICATED ADJACENT TO DEVICE	MOUNTED 80" TO BOTTOM OF LENS OR 6" BELOW CEILING WHICHEVER IS LOWER
P	FIRE ALARM MANUAL STATION	WALL SURFACE M.H. 48" AFF TO CENTERLINE
?	SYSTEM SMOKE DETECTOR	CEILING SURFACE
FACP	FIRE ALARM SYSTEM MAIN CONTROL PANEL	M.H. 6'-6" AFF TO TOP
OS	CEILING MOUNTED DUAL TECHNOLOGY OCCUPANCY SENSOR WATT STOPPER DT-305 – SENSITIVITY TO HIGH, 30 MINUTES TIME DELAY SETTING	CEILING SURFACE 6'-0" FROM SUPPLY DIFFUSER
PP	OCCUPANCY SENOR POWER PACK. WATT STOPPER BZ-50	MOUNTED IN J-BOX ABOVE ACCESSIBLE CEILING
LV	PLENUM RATED LOW VOLTAGE CABLING PER OCCUPANCY SENSOR MANUFACTURERS RECOMMENDATIONS, SUPPORT FROM STRUCTURE	SEE SPECIFICATIONS
EX	EXISTING TO REMAIN	

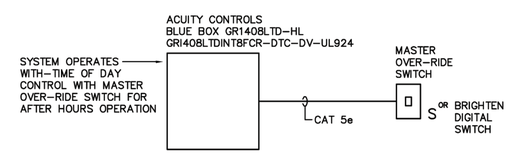

DIMMING SYSTEM RISER DIAGRAM

SCALE: NTS /14202

hayes | cumming
architects

2210 central ave, suite 100
st. petersburg, fl 33712
ph 727.321.0900
fx 727.321.0903

AA26001260
hc-arc.com

MICHAEL WOMACK
P.E. 49040

andrew m. hayes, aia, leed bd+c
paul v. cumming, aia, leed bd+c

©Copyright - All Rights Reserved

members of
AIA
American Institute of Architects

CONSULTANT:

DIAMONDBACK ENGINEERING
1801 North Himes Avenue
Tampa, Florida 33607
Tele. (813) 350-0080
REG. NO. E09758
D.E. JOB #14202

CLIENT / PROJECT NAME:

CITY OF KEY WEST

RENOVATION TO

FREDERICK DOUGLASS RECREATION CENTER

111 OLIVIA STREET
KEY WEST, FL 33040

BID SET

Original drawing is 24"x36". Scale accordingly if reduced.

SHEET TITLE:

ELECTRICAL LEGEND AND GENERAL NOTES

REVISIONS:

DATE ISSUED: 03/28/2016
PROJECT NO.: 12.0D01

DRAWING NUMBER:

E-001 SHEET: 63 OF 68

7/1/2013 8:47:05 AM

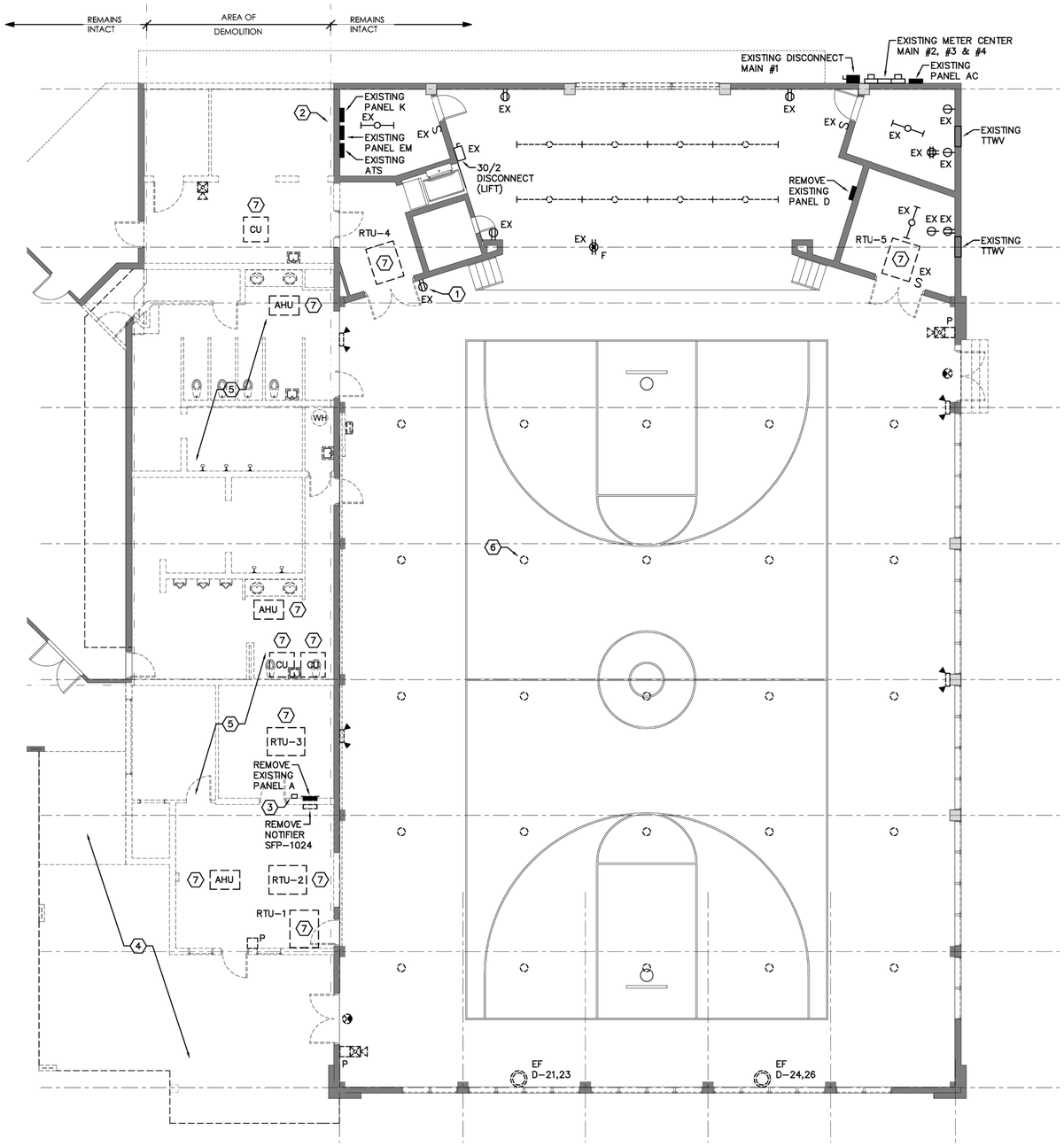

ELECTRICAL DEMOLITION PLAN

SCALE: 1/8"=1'-0" /14202

GENERAL NOTES:

1. REFER TO DEMOLITION NOTES ON E-001.

KEYED NOTES:

1. MAINTAIN CIRCUIT CONTINUITY TO EXISTING SCOREBOARD.
2. EXISTING LB AND COMMUNICATIONS CONDUIT TO REMAIN.
3. REMOVE EXISTING SOFFIT LIGHTING TIMECLOCK.
4. REMOVE EXISTING SOFFIT LIGHTS WHICH ARE FED FROM PANEL A.
5. REMOVE EXISTING POWER, LIGHTING AND FIRE ALARM DEVICES IN THIS AREA. MAINTAIN FIRE ALARM WIRING WHICH FEDS ADJACENT CLINIC. THIS SHALL BE EXTENDED TO NEW FIRE ALARM SYSTEM.
6. REMOVE EXISTING HIGHBAY AND ASSOCIATED LOWERING SYSTEM.
7. REMOVE ASSOCIATED BRANCH CIRCUIT TO POINT OF ORIGIN.

hayes | cumming
architects

2210 central ave, suite 100
st. petersburg, fl 33712
ph 727.321.0900
fx 727.321.0903

AA26001260
hc-arc.com

MICHAEL WOMACK
P.E. 49040

andrew m. hayes, aia, leed bd+c
paul v. cumming, aia, leed bd+c
©Copyright - All Rights Reserved

members of
AIA
American Institute of Architects

CONSULTANT:

DIAMONDBACK ENGINEERING
1801 North Himes Avenue
Tampa, Florida 33607
Tele. (813) 350-0080
REG. NO. EB9758
D.E. JOB #14202

CLIENT / PROJECT NAME:

CITY OF KEY WEST

RENOVATION TO

FREDERICK DOUGLASS RECREATION CENTER

111 OLIVIA STREET
KEY WEST, FL 33040

BID SET

Original drawing is 24"x36". Scale accordingly if reduced.

SHEET TITLE:

ELECTRICAL DEMOLITION PLAN

REVISIONS:

DATE ISSUED: 03/28/2016
PROJECT NO.: 12.0D01

DRAWING NUMBER:

E-002 SHEET: 64 OF 68

7/1/2013 8:47:05 AM

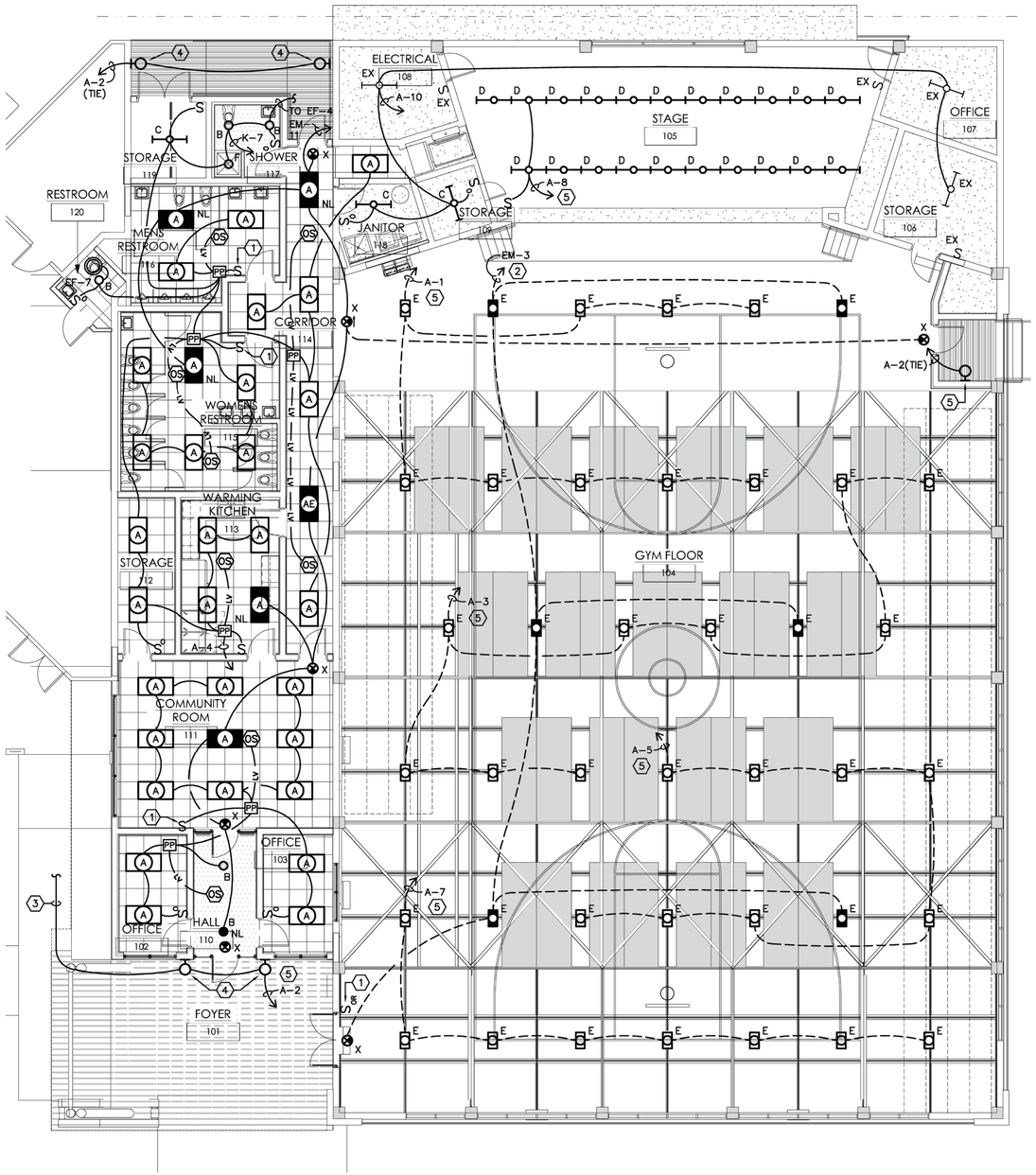

LIGHTING PLAN

SCALE: 1/8"=1'-0" /14202

LIGHTING FIXTURE SCHEDULE

TYPE	DESCRIPTION	MANUFACTURES CAT. NO.	VOLTAGE	LAMPS	INPUT W.	MOUNTING
A	2'x4' RECESSED INDIRECT WITH PERFORATED CENTER BASKET	FOCAL POINT FLU-24-PS-2-T8-IC-120-E-G-L830-WH	120	2-32W T8 3500°K	62W	RECESSED IN LAYIN CEILING
AE	2'x4' RECESSED INDIRECT WITH PERFORATED CENTER BASKET CONNECTED TO EMERGENCY GENERATOR CIRCUIT	FOCAL POINT FLU-24-PS-2-T8-IC-120-E-G-L830-WH	120	2-32W T8 3500°K	62W	RECESSED IN LAYIN CEILING
B	ROUND RECESSED DOWNLIGHT WITH SEMI SPECULAR REFLECTOR	LITHONIA LIGHTING LF6N-1/26TRT-F6OIAZ-120	120	1-26W CFL 3500°K	26W	RECESSED IN HARD CEILING
C	4'-0", 2 LAMP STRIP FIXTURE	LITHONIA LIGHTING C-2-32-120-GEB10IS	120	2-32W T8 3500°K	62W	SURFACE MOUNTED TO HARD CEILING
D	4'-0", 2 LAMP STRIP FIXTURE WITH WIREGUARD	LITHONIA LIGHTING C-2-32-120-GEB10IS-WGCUNNST-HC36	120	2-32W T8 3500°K	62W	CHAIN HANG TO 18'-0" TO BOTTOM OF LIGHT FIXTURE
E	LED HIGH BAY SUSPENDED WITH AIRCRAFT CABLE	LITHONIA LIGHTING PTN-12000L-FD-MVOLT-LP740-IBAC120M20	120	12,000 LUMEN LED 4000°K	146W	HUNG BY AIRCRAFT CABLE, FIXTURE SHALL BE AT SAME PLANE AS ACOUSTIC PANELS, ±22'-0" AFF
F	RECESSED WET LOCATION RATED DOWNLIGHT WITH CLEAR LENS	LITHONIA LIGHTING LF6N-1/26TRT-F6LS1-120	120	26W CFL		RECESSED IN HARD CEILING
X	EXIT SIGN RED LETTERS WITH WHITE FACE, ARROWS AS DRAWINGS INDICATES	LITHONIA LIGHTING EXRLEDM6	120	LED		WALL MOUNTED ABOVE DOOR

GENERAL NOTES:

1. WALL MOUNTED OCCUPANCY SENSORS IN OFFICE AREAS SHALL BE SET FOR MANUAL ON.
2. OCCUPANCY SENSORS IN BATHROOMS, CORRIDORS, KITCHEN AND HALLS SHALL BE SET FOR AUTOMATIC ON.
3. THE GYM LIGHTING WILL BE PROGRAMMED FOR TIME OF DAY. MANUAL OVER-RIDE SWITCH SHALL OVER-RIDE TIME OF DAY CONTROLS IN GYM FOR NOT MORE THAN 2 HOURS.

KEYED NOTES:

1. AFTER HOURS OVER-RIDE SWITCH.
2. BREAK CIRCUIT THROUGH LIGHTING CONTROL SYSTEM RELAY. IF POWER IS LOST TO PANEL RELAY WILL CLOSE ALLOWING EMERGENCY LIGHTING TO OPERATE USING EXISTING GENERATOR AS POWER SOURCE.
3. CONNECT TO EXISTING SOFFIT DOWNLIGHTS.
4. ARCHITECT TO SPECIFY FIXTURE.
5. BREAK BRANCH CIRCUIT THROUGH LIGHTING CONTROL SYSTEM RELAY FOR TIME OF DAY CONTROL.

hayes | cumming
architects

2210 central ave, suite 100
st. petersburg, fl 33712
ph 727.321.0900
fx 727.321.0903

AA26001260
hc-arc.com

MICHAEL WOMACK
P.E. 49040

andrew m. hayes, aia, leed bd+c
paul v. cumming, aia, leed bd+c

©Copyright - All Rights Reserved

members of
AIA
American Institute of Architects

CONSULTANT:

DIAMONDBACK ENGINEERING
1801 North Himes Avenue
Tampa, Florida 33607
Tele. (813) 350-0080
REG. NO. EB9758
D.E. JOB #14202

CLIENT / PROJECT NAME:

CITY OF KEY WEST
RENOVATION TO

FREDERICK DOUGLASS RECREATION CENTER

111 OLIVIA STREET
KEY WEST, FL 33040

BID SET

Original drawing is 24"x36". Scale accordingly if reduced.

SHEET TITLE:

LIGHTING PLAN

REVISIONS:

DATE ISSUED: 03/28/2016
PROJECT NO.: 12.0D01

DRAWING NUMBER:

E-003 SHEET: 65 OF 68

7/1/2013 8:47:05 AM

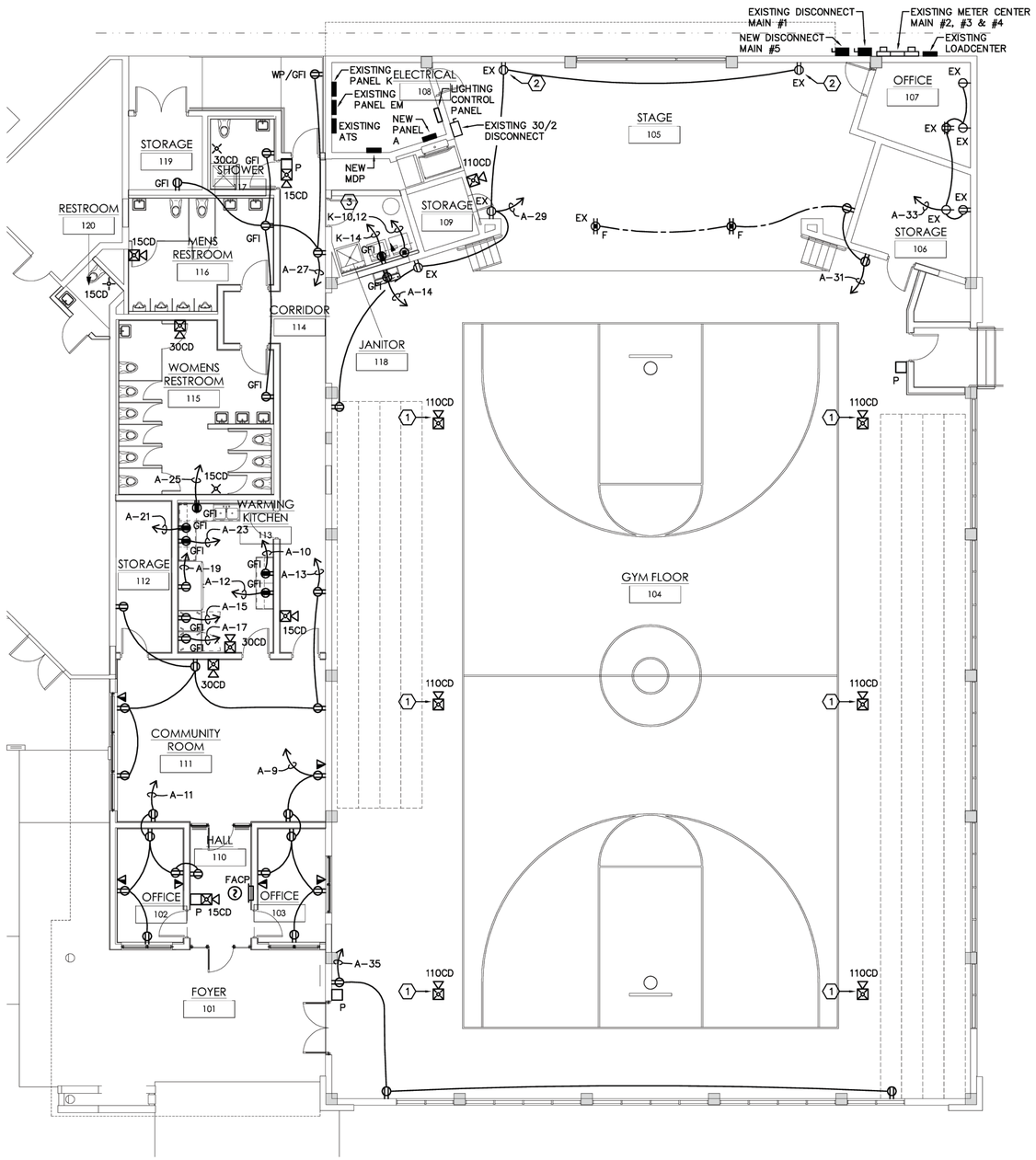

GENERAL NOTES:

1. DEVICES ARE NEW UNLESS OTHERWISE NOTED.

KEYED NOTES:

1. FIRE ALARM DEVICE MOUNTED TO SAME PLANE AS ACOUSTIC PANELS.
2. INSTALL NEW RECEPTACLES IN EXISTING BACK BOXES.
3. 3 #10 AND 1 #10 E.G. IN 3/4" CONDUIT.

POWER PLAN

SCALE: 1/8"=1'-0" /14202

hayes | cumming
architects

2210 central ave, suite 100
st. petersburg, fl 33712
ph 727.321.0900
fx 727.321.0903

AA26001260
hc-arc.com

MICHAEL WOMACK
P.E. 49040

andrew m. hayes, aia, leed bd+c
paul v. cumming, aia, leed bd+c

©Copyright - All Rights Reserved

members of
AIA
American Institute of Architects

CONSULTANT:

DIAMONDBACK ENGINEERING
1801 North Himes Avenue
Tampa, Florida 33607
Tele. (813) 350-0080
REG. NO. EB9758
D.E. JOB #14202

CLIENT / PROJECT NAME:

CITY OF KEY WEST

RENOVATION TO

FREDERICK DOUGLASS RECREATION CENTER

111 OLIVIA STREET
KEY WEST, FL 33040

BID SET

Original drawing is 24"x36". Scale accordingly if reduced.

SHEET TITLE:

POWER PLAN

REVISIONS:

DATE ISSUED: 03/28/2016
PROJECT NO.: 12.0D01

DRAWING NUMBER:

E-004 SHEET: 66 OF 68

7/1/2013 8:47:05 AM

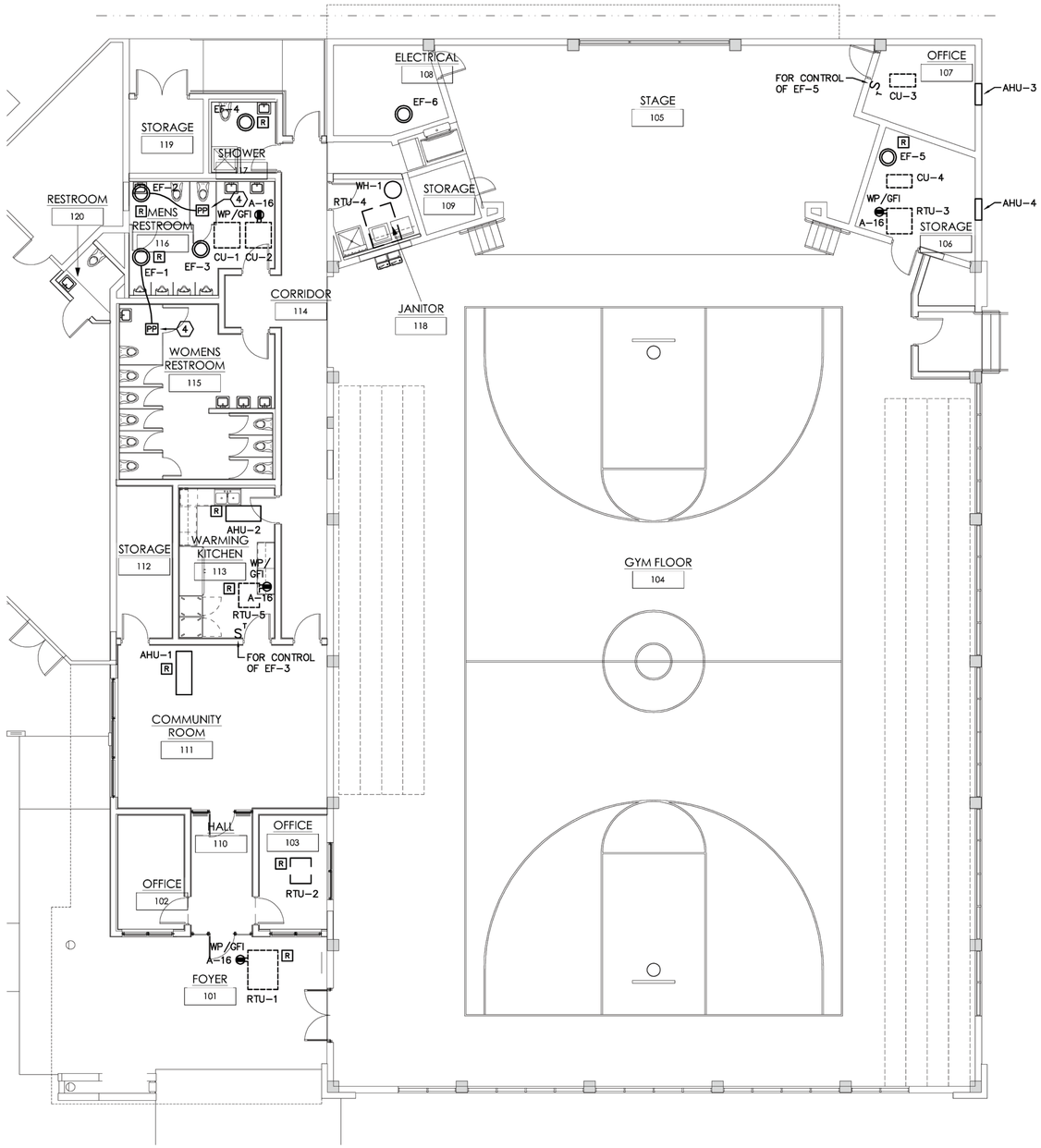

POWER PLAN

SCALE: 1/8"=1'-0" /14202

GENERAL NOTES:

1. DEVICES ARE NEW UNLESS OTHERWISE NOTED.

KEYED NOTES:

1. FIRE ALARM DEVICE MOUNTED TO SAME PLANE AS ACOUSTIC PANELS.
2. INSTALL NEW RECEPTACLES IN EXISTING BACK BOXES.
3. 3 #10 AND 1 #10 E.G. IN 3/4" CONDUIT.
4. CONNECT TO POWER PACK CONTROLLING LIGHTING IN THIS ROOM.

hayes | cumming
architects

2210 central ave, suite 100
st. petersburg, fl 33712
ph 727.321.0900
fx 727.321.0903

AA26001260
hc-arc.com

MICHAEL WOMACK
P.E. 49040

andrew m. hayes, aia, leed bd+c
paul v. cumming, aia, leed bd+c
©Copyright - All Rights Reserved

members of
AIA
American Institute of Architects

CONSULTANT:

DIAMONDBACK ENGINEERING
1801 North Himes Avenue
Tampa, Florida 33607
Tele. (813) 350-0080
REG. NO. EB9758
D.E. JOB #14202

CLIENT / PROJECT NAME:

CITY OF KEY WEST

RENOVATION TO

FREDERICK DOUGLASS RECREATION CENTER

111 OLIVIA STREET
KEY WEST, FL 33040

BID SET

Original drawing is 24"x36". Scale accordingly if reduced.

SHEET TITLE:

HVAC PLAN

REVISIONS:

DATE ISSUED: 03/28/2016
PROJECT NO.: 12.0D01

DRAWING NUMBER:

E-005 SHEET: 67 OF 68

7/1/2013 8:47:05 AM

NEW

PANEL A

CIRCUIT BREAKER TYPE 120 / 240 V., 1 PH., 3W. — 100A. MAIN LUGS ONLY SURFACE MTD. – NEMA 1

CKT. NO.	NO. OF POLES	TRIP AMPS	VOLT AMPS	LOAD	CKT. NO.	NO. OF POLES	TRIP AMPS	VOLT AMPS	LOAD
1	1	20	1314	GYM LIGHTING	2	1	20	250	EXTERIOR LIGHTING
3	1	20	1314	GYM LIGHTING	4	1	20	1131	INTERIOR LIGHTING
5	1	20	1168	GYM LIGHTING	6	1	20	744	INTERIOR LIGHTING
7	1	20	1168	GYM LIGHTING	8	1	20	1302	INTERIOR LIGHTING
9	1	20	1080	RECEPTACLES	10	1	20	500	ABOVE COUNTER RECEPTACLES
11	1	20	1080	RECEPTACLES	12	1	20	500	ABOVE COUNTER RECEPTACLES
13	1	20	1080	RECEPTACLES	14	1	20	500	EWC
15	1	20	1000	WARMING BOX	16	1	20	540	ROOF RECEPTACLES
17	1	20	1000	WARMING BOX	18	1	20	–	SPARE
19	1	20	1200	REFRIGERATOR/FREEZER	20	1	20	–	SPARE
21	1	20	500	ABOVE COUNTER RECEPTACLE	22	1	20	–	SPARE
23	1	20	500	ABOVE COUNTER RECEPTACLE	24	1	20	–	SPARE
25	1	20	500	ABOVE COUNTER RECEPTACLE	26	1	20	–	SPARE
27	1	20	1080	RECEPTACLES	28	1	20	–	SPARE
29	1	20	900	RECEPTACLES	30	1	20	–	SPARE
31	1	20	720	RECEPTACLES	32	1	20	–	SPARE
33	1	20	900	RECEPTACLES	34	1	20	–	SPARE
35	1	20	360	RECEPTACLES	36	1	20	–	SPARE
37	1	–	–	–	38	1	20	–	SPARE
39	1	–	–	–	40	1	20	–	SPARE
41	1	–	–	–	42	1	20	–	SPARE

ALL BREAKERS SHALL HAVE A MINIMUM OF 10,000 A.I.C. SYMMETRICAL AT 240 VOLTS

LIGHTING @ 125% = 10,489 VA
MISC LOAD @ 100% = 12,900 VA
23,389 VA
(97 AMPS)

EXISTING

PANEL EM

CIRCUIT BREAKER TYPE 120 / 240 V., 1 PH., 3W. — 125A. MAIN LUGS ONLY SURFACE MTD. – NEMA 1

CKT. NO.	NO. OF POLES	TRIP AMPS	VOLT AMPS	LOAD	CKT. NO.	NO. OF POLES	TRIP AMPS	VOLT AMPS	LOAD
1	1	20	690	EXISTING ADA LIFT	2	1	20	1000	CLINC REFRIG
3	1	20	876	EM LIGHTING – GYM	4	2	50	–	SPARE
5	1	20/20	–	SPARE	6	–	–	–	–
7	2	30	–	SPARE	8	1	20	–	SPARE
9	–	–	–	–	10	1	20	–	SPARE
11	1	20	372	EM LIGHTING COMMUNITY CENTER	12	1	20	500	PA SYSTEM

ALL BREAKERS SHALL HAVE A MINIMUM OF 10,000 A.I.C. SYMMETRICAL AT 240 VOLTS

LIGHTING @ 125% = 1,560 VA
MISC LOAD @ 100% = 2,190 VA
3,750 VA
(16 AMPS)

EXISTING

PANEL K

CIRCUIT BREAKER TYPE SQUARE-D NQOD — 120 / 240 V., 1 PH., 3W. — 400A. MAIN LUGS ONLY SURFACE MTD. – NEMA 1

CKT. NO.	NO. OF POLES	TRIP AMPS	VOLT AMPS	LOAD	CKT. NO.	NO. OF POLES	TRIP AMPS	VOLT AMPS	LOAD
1	1	20	690	EF-1	2	2	60	–	SPARE
3	1	20	530	EF-2	4	–	–	–	–
5	1	20	530	EF-3	6	2	60	–	SPARE
7	1	20	530	EF-4	8	–	–	–	–
9	1	20	530	EF-5	10	2	30	2500	DRYER
11	1	20	530	EF-6	12	–	–	2500	–
13	1	20	–	SPARE	14	1	20	1200	WASHER
15	1	20	–	SPARE	16	1	20	–	SPARE
17	2	125	1690	EXISTING ATS	18	2	60	5540	RTU-1
19	–	–	1748	–	20	–	–	5540	–
21	1	20	–	SPARE	22	2	60	5540	RTU-2
23	1	20	–	SPARE	24	–	–	5540	–
25	2	60	–	SPARE	26	2	30	2250	WH-1
27	–	–	–	–	28	–	–	2250	–
29	2	30	–	SPARE	30	1	20	–	–
31	–	–	–	–	32	1	20	–	SPARE
33	1	20	–	SPARE	34	2	100	10646	PANEL A ☐
35	1	20	–	SPARE	36	–	–	10646	–
37	1	20	–	SPARE	38	2	60	5540	RTU-3
39	2	60	5540	RTU-4	40	–	–	5540	–
41	–	–	5540	–	42	1	–	–	SPACE

ALL BREAKERS SHALL HAVE A MINIMUM OF 10,000 A.I.C. SYMMETRICAL AT 240 VOLTS

☐ NEW PANEL A IS TO BE REFED FROM EXISTING 100 AMP CIRCUIT BREAKER IN THIS PANEL.

LIGHTING @ 125% = 12,049 VA
MISC LOAD @ 100% = 73,451 VA
85,500 VA
(356 AMPS)

NEW

PANEL MDP

CIRCUIT BREAKER TYPE 120 / 208 V., 3 PH., 4W. — 400A. MAIN LUGS ONLY SURFACE MTD. – NEMA 1

CKT. NO.	NO. OF POLES	TRIP AMPS	VOLT AMPS	LOAD	CKT. NO.	NO. OF POLES	TRIP AMPS	VOLT AMPS	LOAD
1	3	30	2787	AHU-1	2	3	175	12334	RTU-5
3	–	–	2787	–	4	–	–	12334	–
5	–	–	2787	–	6	–	–	12334	–
7	3	30	1734	CU-1	8	2	15	685	CU-3
9	–	–	1734	–	10	–	–	685	–
11	–	–	1734	–	12	2	15	685	CU-4
13	3	30	2834	AHU-2	14	–	–	685	–
15	–	–	2834	–	16	1	–	–	SPACE
17	–	–	2834	–	18	1	–	–	SPACE
19	1	–	–	SPACE	20	1	–	–	SPACE
21	1	–	–	SPACE	22	1	–	–	SPACE
23	1	–	–	SPACE	24	1	–	–	SPACE
25	1	–	–	SPACE	26	1	–	–	SPACE
27	1	–	–	SPACE	28	1	–	–	SPACE
29	1	–	–	SPACE	30	1	–	–	SPACE
31	1	–	–	SPACE	32	1	–	–	SPACE
33	1	–	–	SPACE	34	1	–	–	SPACE
35	1	–	–	SPACE	36	1	–	–	SPACE
37	1	–	–	SPACE	38	1	–	–	SPACE
39	1	–	–	SPACE	40	1	–	–	SPACE
41	1	–	–	SPACE	42	1	–	–	SPACE

ALL BREAKERS SHALL HAVE A MINIMUM OF 10,000 A.I.C. SYMMETRICAL AT 240 VOLTS

HVAC @ 100% = 61,807 VA
(172 AMPS)

MECHANICAL EQUIPMENT ELECTRICAL SCHEDULE

MARK	LOAD IN KW	VOLT/ PHASE	CIRCUIT	CONDUCTORS/ CONDUIT	DISCONNECT/STARTER REQUIREMENTS	REMARKS
AHU-1	8.36	208/3	MDP-1,3,5	3 #8 AND 1 #10 E.G. IN 1" CONDUIT	60/3/NF DISCONNECT	MOCP PER MANUFACTURERS RECOMMENDATIONS
CU-1	5.2	208/3	MDP-7,9,11	3 #10 AND 1 #10 E.G. IN 3/4" CONDUIT	30/3/NF NEMA 3R DISCONNECT	MOCP PER MANUFACTURERS RECOMMENDATIONS
AHU-2	8.5	208/3	MDP-13,15,17	3 #10 AND 1 #10 E.G. IN 3/4" CONDUIT	30/3/NF DISCONNECT	MOCP PER MANUFACTURERS RECOMMENDATIONS
CU-2	2.6	208/1	MDP-13,15,17	3 #10 AND 1 #10 E.G. IN 3/4" CONDUIT	30/3/NF NEMA 3R DISCONNECT	MOCP PER MANUFACTURERS RECOMMENDATIONS
AHU-3	–	208/1	NOTE #1	3 #12 AND 1 #12 E.G. IN 1/2" CONDUIT	THREE POLE MOTOR RATED SWITCH	NOTE #1
CU-3	1.37	208/1	MDP-8,10	2 #12 AND 1 #12 E.G. IN 1/2" CONDUIT	30/2/NF NEMA 3R DISCONNECT	MOCP PER MANUFACTURERS RECOMMENDATIONS
AHU-4	–	208/1	NOTE #1	3 #12 AND 1 #12 E.G. IN 1/2" CONDUIT	THREE POLE MOTOR RATED SWITCH	NOTE #1
CU-4	1.37	208/1	MDP-12,14	2 #12 AND 1 #12 E.G. IN 1/2" CONDUIT	30/2/NF NEMA 3R DISCONNECT	MOCP PER MANUFACTURERS RECOMMENDATIONS
RTU-1	11.08	240/1	K-18,20	2 #6 AND 1 #10 E.G. IN 1" CONDUIT	60/2/NF NEMA 3R DISCONNECT	MOCP PER MANUFACTURERS RECOMMENDATIONS
RTU-2	11.08	240/1	K-22,24	2 #6 AND 1 #10 E.G. IN 1" CONDUIT	60/2/NF NEMA 3R DISCONNECT	MOCP PER MANUFACTURERS RECOMMENDATIONS
RTU-3	11.08	240/1	K-38,40	2 #6 AND 1 #10 E.G. IN 1" CONDUIT	60/2/NF NEMA 3R DISCONNECT	MOCP PER MANUFACTURERS RECOMMENDATIONS
RTU-4	11.08	240/1	K-39,41	2 #6 AND 1 #10 E.G. IN 1" CONDUIT	60/2/NF NEMA 3R DISCONNECT	MOCP PER MANUFACTURERS RECOMMENDATIONS
RTU-5	37.0	208/3	MDP-2,4,6	3 #2/0 AND 1 #6 E.G. IN 2" CONDUIT	200/3/NF NEMA 3R DISCONNECT	MOCP PER MANUFACTURERS RECOMMENDATIONS
EF-1	0.69	120/1	K-1	2 #12 AND 1 #12 E.G. IN 1/2" CONDUIT	SINGLE POLE MOTOR RATED SWITCH	OCCUPANCY SENSOR
EF-2	0.53	120/1	K-3	2 #12 AND 1 #12 E.G. IN 1/2" CONDUIT	SINGLE POLE MOTOR RATED SWITCH	OCCUPANCY SENSOR
EF-3	0.53	120/1	K-5	2 #12 AND 1 #12 E.G. IN 1/2" CONDUIT	SINGLE POLE MOTOR RATED SWITCH	TWIST TIMER CONTROL
EF-4	0.53	120/1	K-7	2 #12 AND 1 #12 E.G. IN 1/2" CONDUIT	SINGLE POLE MOTOR RATED SWITCH	OCCUPANCY SENSOR
EF-5	0.53	120/1	K-9	2 #12 AND 1 #12 E.G. IN 1/2" CONDUIT	SINGLE POLE MOTOR RATED SWITCH	TWIST TIMER CONTROL
EF-6	0.53	120/1	K-11	2 #12 AND 1 #12 E.G. IN 1/2" CONDUIT	SINGLE POLE MOTOR RATED SWITCH	INTERLOCK WITH RTU-5
WH-1	4.5	240/1	K-26,28	2 #10 AND 1 #10 E.G. IN 3/4" CONDUIT	30/2/NF DISCONNECT	–

NOTE #1: WIRE INDOOR UNIT FROM OUTDOOR UNIT PER MANUFACTURERS RECOMMENDATIONS

hayes | cumming
architects

2210 central ave, suite 100
st. petersburg, fl 33712
ph 727.321.0900
fx 727.321.0903

AA26001260
hc-arc.com

MICHAEL WOMACK
P.E. 49040

andrew m. hayes, aia, leed bd+c
paul v. cumming, aia, leed bd+c

©Copyright - All Rights Reserved

members of
AIA
American Institute of Architects

CONSULTANT:

DIAMONDBACK ENGINEERING
1801 North Himes Avenue
Tampa, Florida 33607
Tele. (813) 350-0080
REG. NO. EB9758
D.E. JOB #14202

CLIENT / PROJECT NAME:

CITY OF KEY WEST
RENOVATION TO

FREDERICK DOUGLASS RECREATION CENTER

111 OLIVIA STREET
KEY WEST, FL 33040

BID SET

Original drawing is 24"x36". Scale accordingly if reduced.

SHEET TITLE:

PANEL SCHEDULES

REVISIONS:

DATE ISSUED: 03/28/2016
PROJECT NO.: 12.0D01

DRAWING NUMBER:

E-006 SHEET: 68 OF 68

7/1/2013 8:47:05 AM