CITY OF KEY WEST

SAILFISH PIER DOCK REPLACEMENT

MONROE COUNTY, FLORIDA
STANTEC PROJECT NO. 215612745

SECTION : 32
TOWNSHIP: 67S
RANGE: 25E
LATITUDE: 24°33'83"
LONGITUDE: 81°47'04"

INDEX OF SHEETS

SHEET NO.	SHEET DESCRIPTION
C01	COVER
C02	OVERALL AERIAL PLAN
C03	EXISTING CONDITIONS PLAN
C04	DEMOLITION / RELOCATION PLAN
C05	GEOMETRY PLAN
C06	DOCK DETAIL
C07	DOCK / RAMP CROSS SECTIONS
C08	UTILITY PLANS
C09	RELOCATION PLANS
E01-E08	ELECTRICAL PLANS
FP01-FP05	FIRE PROTECTION SPECIFICATIONS
P01-P04	PLUMBING PLANS
S01	STRUCTURAL PLANS

LOCATION MAP
Scale: N.T.S.

MAYOR & COUNCIL:

Craig Cates, Mayor
Jimmy Weekley, Commissioner
Samuel Kaufman, Commissioner
Billy Wardlow, Commissioner
Richard Payne, Commissioner
Margaret Romero, Commissioner
Clayton Lopez, Commissioner

City Manager: James Scholl

100% SET

JANUARY , 2016

••••••••APPROVALS••••••••			
AGENCY	SUBMITTAL DATE	APPROVAL DATE	PERMIT NUMBER

Stantec
901 Ponce de Leon Blvd. Suite 900
Coral Gables, Florida, 33134
Tel. 305-445-2900
Fax. 305-445-3344
www.stantec.com

APPROVED BY

CARLOS M. HERDOCIA
REGISTERED ENGINEER NO. 47660
STATE OF FLORIDA

N

Scale: 1" = 100'
(Reduced Scale: 1" = 200')

0 50 100 200

NOTE: MEAN LOW WATER PER DEP TIDE STATION 872-4542. MEAN HIGH WATER EL. -0.23' NAVD88; MEAN LOW @ -1.24' NAVD88.

SITE SURVEY INFORMATION FROM:
FLORIDA KEYS LAND SURVEYORS
19960 OVERSEAS HIGHWAY
SUGARLOAF KEY, FL 33042
FIELD WORK DATE: JULY 16, 2015
SIGNED AND SEALED BY:
ERIC ISAACS LS 7847
JULY 24, 2015

Revision	By	Appd.	YY.MM.DD

Issued	By	Appd.	YY.MM.DD

Seal

CARLOS M. HERDOCIA, P.E.
REGISTERED ENGINEER NO. 47660
STATE OF FLORIDA

Consultants

Stantec
901 Ponce de Leon Blvd. Suite 900
Coral Gables, Florida 33134
www.stantec.com

The Contractor shall verify and be responsible for all dimensions. DO NOT scale the drawing - any errors or omissions shall be reported to Stantec without delay.
The Copyrights to all designs and drawings are the property of Stantec. Reproduction or use for any purpose other than that authorized by Stantec is forbidden.

CITY OF KEY WEST
SAILFISH PIER DOCK REPLACEMENT
Key West, Florida

File Name:	DS	SC	DS	14.01.31
	Dwn.	Chkd.	Dsgn.	YY.MM.DD

OVERALL PLAN

Project No. 215612745
Scale
Drawing No. C02
Sheet of 27
Revision

V:\215612745\active\215612745\civil\drawing\215612745 CIVIL SITE.dwg
2016/07/19 9:24 AM By: Morales, Rene

ORIGINAL SHEET - ANSI D HORIZ

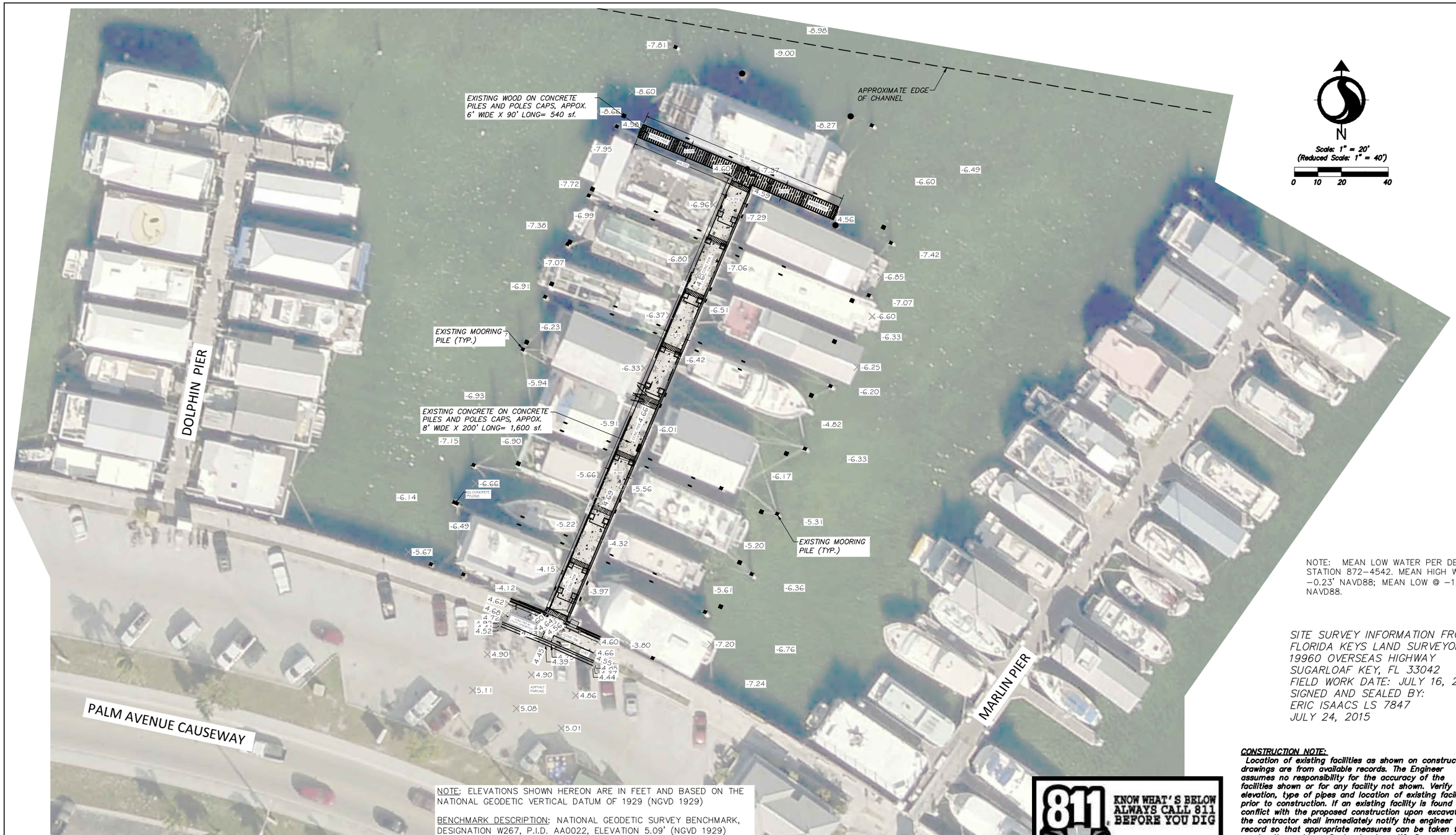

NOTE: MEAN LOW WATER PER DEP TIDE STATION 872-4542. MEAN HIGH WATER EL. -0.23' NAVD88; MEAN LOW @ -1.24' NAVD88.

SITE SURVEY INFORMATION FROM:
FLORIDA KEYS LAND SURVEYORS
19960 OVERSEAS HIGHWAY
SUGARLOAF KEY, FL 33042
FIELD WORK DATE: JULY 16, 2015
SIGNED AND SEALED BY:
ERIC ISAACS LS 7847
JULY 24, 2015

NOTE: ELEVATIONS SHOWN HEREON ARE IN FEET AND BASED ON THE NATIONAL GEODETIC VERTICAL DATUM OF 1929 (NGVD 1929)

BENCHMARK DESCRIPTION: NATIONAL GEODETIC SURVEY BENCHMARK, DESIGNATION W267, P.I.D. AA0022, ELEVATION 5.09' (NGVD 1929)

MEAN LOW WATER ELEVATION AT TIME OF SURVEY= -0.09 NGVD 1929

MEAN HIGH WATER ELEVATION AT TIME OF SURVEY= 0.94 NGVD 1929

CONSTRUCTION NOTE:
Location of existing facilities as shown on construction drawings are from available records. The Engineer assumes no responsibility for the accuracy of the facilities shown or for any facility not shown. Verify the elevation, type of pipes and location of existing facilities prior to construction. If an existing facility is found to conflict with the proposed construction upon excavation the contractor shall immediately notify the engineer of record so that appropriate measures can be taken to resolve the problem. Contractor to notify Owner and Sunshine State One Call of Florida, Inc. @ 811 at Least Forty Eight (48) Hours Prior to Excavating. Evidence of such notice shall be furnished to Stantec prior to excavating.

811 KNOW WHAT'S BELOW ALWAYS CALL 811 BEFORE YOU DIG
It's fast. It's free. It's the law.
www.callsunshine.com

Revision	By	Appd.	YY.MM.DD

Issued	By	Appd.	YY.MM.DD

Seal

CARLOS M. HERDOCIA, P.E.
REGISTERED ENGINEER NO. 47660
STATE OF FLORIDA

Consultants

Stantec
901 Ponce de Leon Blvd. Suite 900
Coral Gables, Florida 33134
www.stantec.com

The Contractor shall verify and be responsible for all dimensions. DO NOT scale the drawing - any errors or omissions shall be reported to Stantec without delay.
The Copyrights to all designs and drawings are the property of Stantec. Reproduction or use for any purpose other than that authorized by Stantec is forbidden.

CITY OF KEY WEST
SAILFISH PIER DOCK REPLACEMENT
Key West, Florida

File Name:	DS	SC	DS	14.01.31
	Dwn.	Chkd.	Dsgn.	YY.MM.DD

EXISTING CONDITIONS & DEPTH SURVEY

Project No.	Scale	
215612745		
Drawing No.	Sheet	Revision
C03	of 27	

ORIGINAL SHEET - ANSI D HORIZ

\\Ts\215\active\215612745\civil\drawing\215612745 CIVIL SITE.dwg
2016/07/19 8:34 AM By: Herrera, Rey

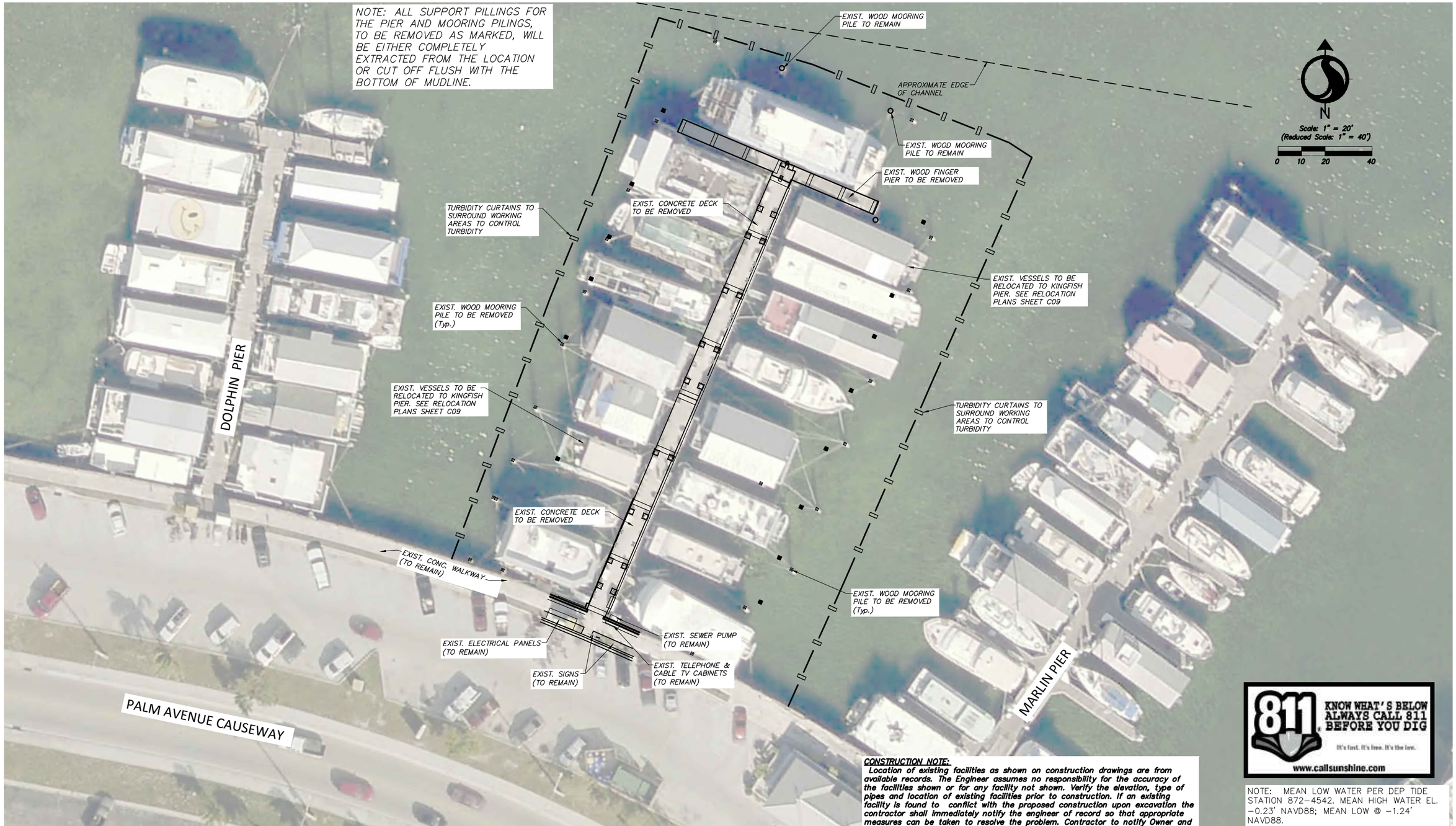

CONSTRUCTION NOTE:
Location of existing facilities as shown on construction drawings are from available records. The Engineer assumes no responsibility for the accuracy of the facilities shown or for any facility not shown. Verify the elevation, type of pipes and location of existing facilities prior to construction. If an existing facility is found to conflict with the proposed construction upon excavation the contractor shall immediately notify the engineer of record so that appropriate measures can be taken to resolve the problem. Contractor to notify Owner and Sunshine State One Call of Florida, Inc. @ 811 at Least Forty Eight (48) Hours Prior to Excavating. Evidence of such notice shall be furnished to Stantec prior to excavating.

NOTE: MEAN LOW WATER PER DEP TIDE STATION 872-4542. MEAN HIGH WATER EL. -0.23' NAVD88; MEAN LOW @ -1.24' NAVD88.

Revision	By	Appd.	YY.MM.DD

Issued	By	Appd.	YY.MM.DD

Seal

CARLOS M. HERDOCIA, P.E.
REGISTERED ENGINEER NO. 47660
STATE OF FLORIDA

Consultants

Stantec
901 Ponce de Leon Blvd. Suite 900
Coral Gables, Florida 33134
www.stantec.com

The Contractor shall verify and be responsible for all dimensions. DO NOT scale the drawing - any errors or omissions shall be reported to Stantec without delay.
The Copyrights to all designs and drawings are the property of Stantec. Reproduction or use for any purpose other than that authorized by Stantec is forbidden.

CITY OF KEY WEST
SAILFISH PIER DOCK REPLACEMENT
Key West, Florida

File Name:

DS	SC	DS	14.01.31
Dwn.	Chkd.	Dsgn.	YY.MM.DD

DEMOLITION - RELOCATION PLAN

Project No. 215612745
Scale
Drawing No. C04
Sheet of 27
Revision

I:\215612745\active\215612745\civil\drawing\215612745 CIVIL SITE.dwg
2016/07/19 8:35 AM By: Morales, Raul

ORIGINAL SHEET – ANSI D HORIZ

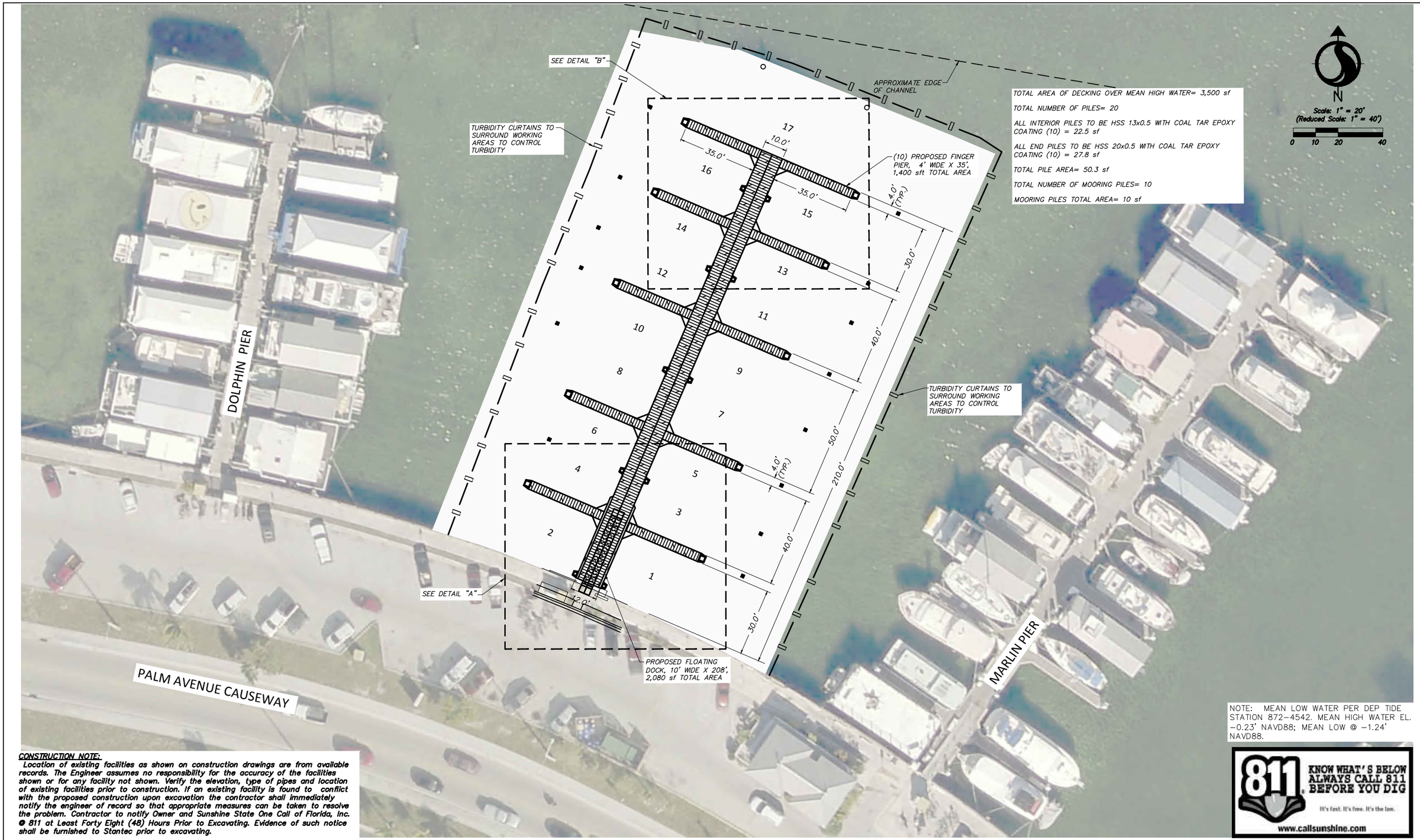

TOTAL AREA OF DECKING OVER MEAN HIGH WATER= 3,500 sf

TOTAL NUMBER OF PILES= 20

ALL INTERIOR PILES TO BE HSS 13x0.5 WITH COAL TAR EPOXY COATING (10) = 22.5 sf

ALL END PILES TO BE HSS 20x0.5 WITH COAL TAR EPOXY COATING (10) = 27.8 sf

TOTAL PILE AREA= 50.3 sf

TOTAL NUMBER OF MOORING PILES= 10

MOORING PILES TOTAL AREA= 10 sf

NOTE: MEAN LOW WATER PER DEP TIDE STATION 872-4542. MEAN HIGH WATER EL. -0.23' NAVD88; MEAN LOW @ -1.24' NAVD88.

CONSTRUCTION NOTE:

Location of existing facilities as shown on construction drawings are from available records. The Engineer assumes no responsibility for the accuracy of the facilities shown or for any facility not shown. Verify the elevation, type of pipes and location of existing facilities prior to construction. If an existing facility is found to conflict with the proposed construction upon excavation the contractor shall immediately notify the engineer of record so that appropriate measures can be taken to resolve the problem. Contractor to notify Owner and Sunshine State One Call of Florida, Inc. @ 811 at Least Forty Eight (48) Hours Prior to Excavating. Evidence of such notice shall be furnished to Stantec prior to excavating.

811 KNOW WHAT'S BELOW ALWAYS CALL 811 BEFORE YOU DIG
It's fast. It's free. It's the law.
www.callsunshine.com

Revision	By	Appd.	YY.MM.DD

Issued	By	Appd.	YY.MM.DD

Seal

CARLOS M. HERDOCIA, P.E.
REGISTERED ENGINEER NO. 47660
STATE OF FLORIDA

Consultants

Stantec
901 Ponce de Leon Blvd. Suite 900
Coral Gables, Florida 33134
www.stantec.com

The Contractor shall verify and be responsible for all dimensions. DO NOT scale the drawing - any errors or omissions shall be reported to Stantec without delay.
The Copyrights to all designs and drawings are the property of Stantec. Reproduction or use for any purpose other than that authorized by Stantec is forbidden.

CITY OF KEY WEST
SAILFISH PIER DOCK REPLACEMENT
Key West, Florida

File Name:

DS	SC	DS	14.01.31
Dwn.	Chkd.	Dsgn.	YY.MM.DD

GEOMETRY PLAN

Project No. 215612745
Scale
Drawing No. C05
Sheet
of 27
Revision

ORIGINAL SHEET – ANSI D HORIZ

\\Ca\156\active\215612745\civil\drawing\215612745 CIVIL SITE.dwg
20/09/2016 10:07 AM By: Ruiz, Wayne

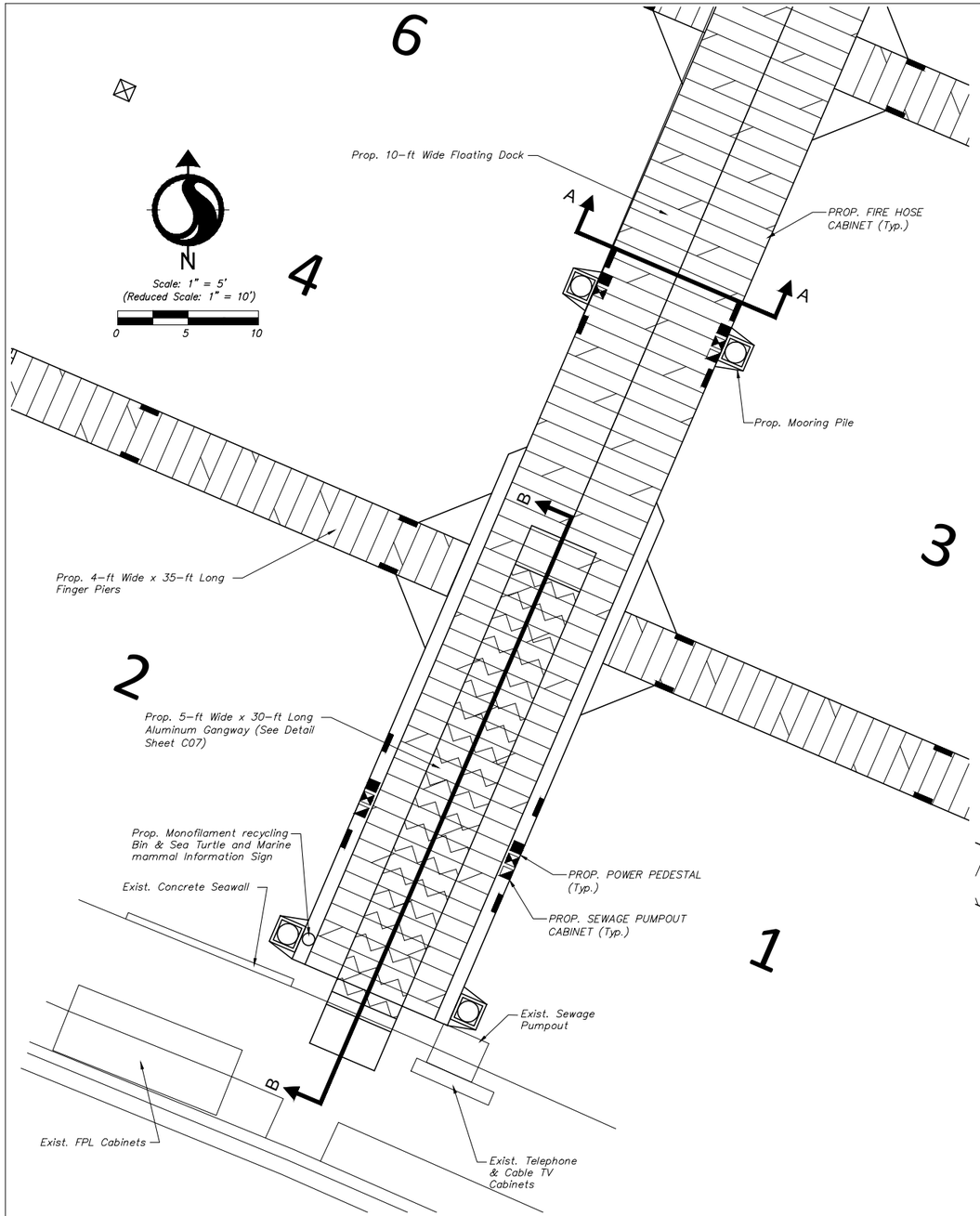

DETAIL A - PROPOSED DOCK

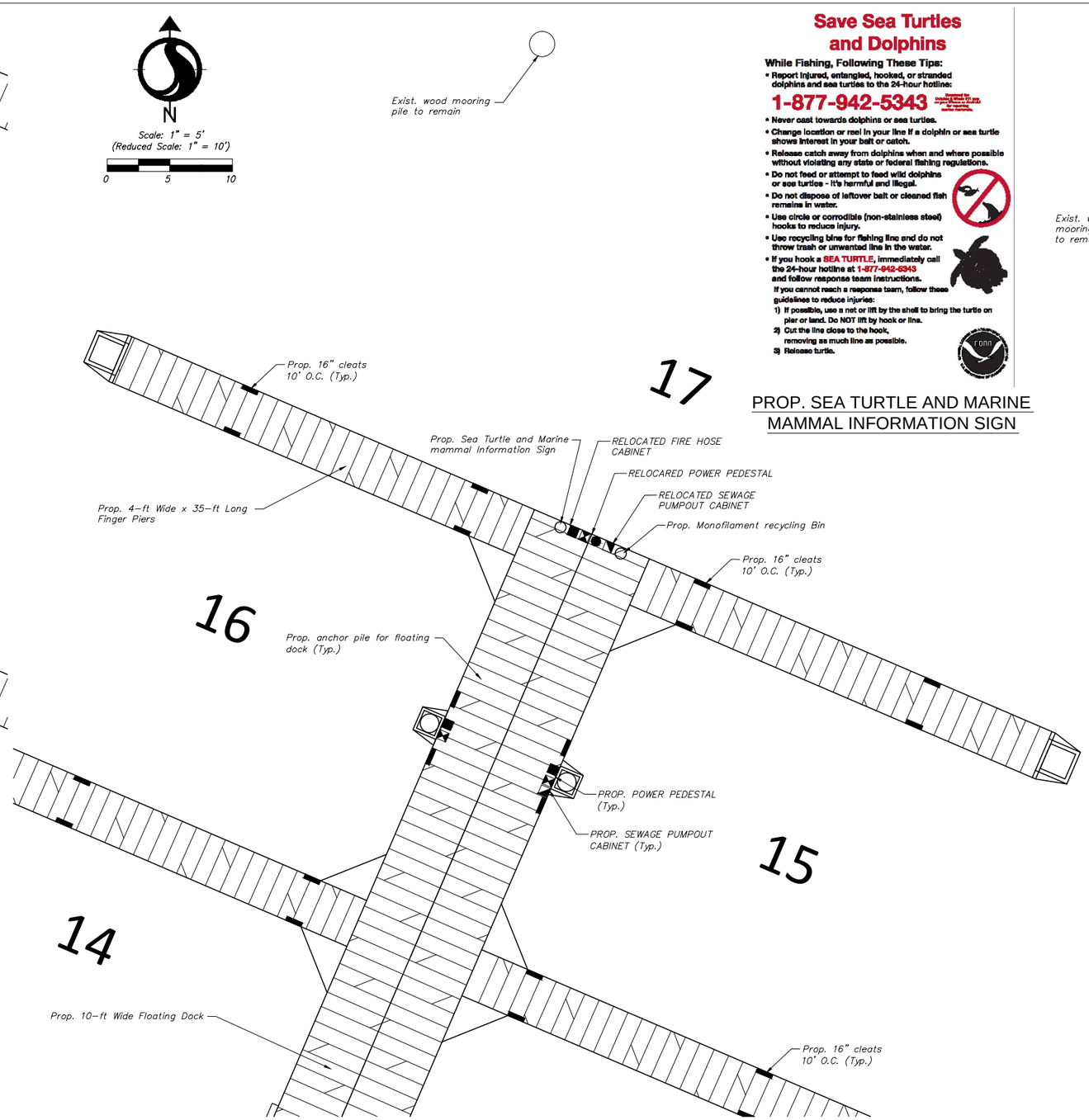

DETAIL B - PROPOSED DOCK

Revision	By	Appd.	YY.MM.DD

Issued	By	Appd.	YY.MM.DD

Seal

CARLOS M. HERDOCIA, P.E.
REGISTERED ENGINEER NO. 47660
STATE OF FLORIDA

Consultants

Stantec
901 Ponce de Leon Blvd. Suite 900
Coral Gables, Florida 33134
www.stantec.com

The Contractor shall verify and be responsible for all dimensions. DO NOT scale the drawing - any errors or omissions shall be reported to Stantec without delay.
The Copyrights to all designs and drawings are the property of Stantec. Reproduction or use for any purpose other than that authorized by Stantec is forbidden.

CITY OF KEY WEST
SAILFISH PIER DOCK REPLACEMENT
Key West, Florida

File Name:

DS	SC	DS	14.01.31
Dwn.	Chkd.	Dsgn.	YY.MM.DD

DOCK DETAIL

Project No.	Scale	
215612745	SEE PLANS	
Drawing No.	Sheet	Revision
C06	of 27	

J:\215612745\active\215612745\civil\drawing\215612745 Detail Docks.dwg
2016/07/19 9:35 AM By: Morales, Ross

ORIGINAL SHEET – ANSI D HORIZ

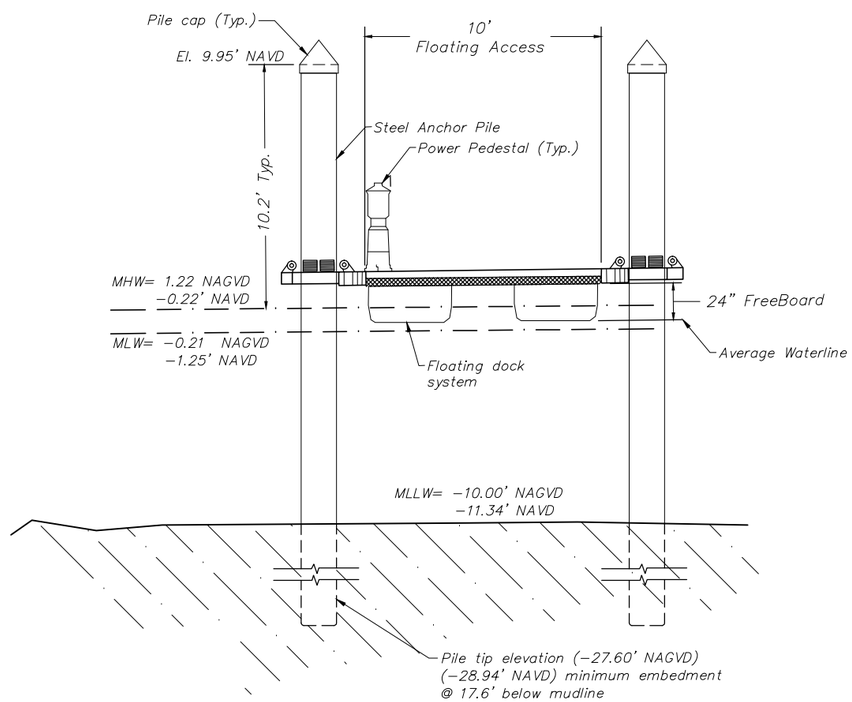

NOTE: ALL DEPTHS REFERENCE MEAN LOW WATER PER DEP TIDE STATION 872-4542. MEAN HIGH WATER EL. -0.23' NAVD88; MEAN LOW @ -1.24' NAVD88.

CROSS SECTION A-A

N.T.S.

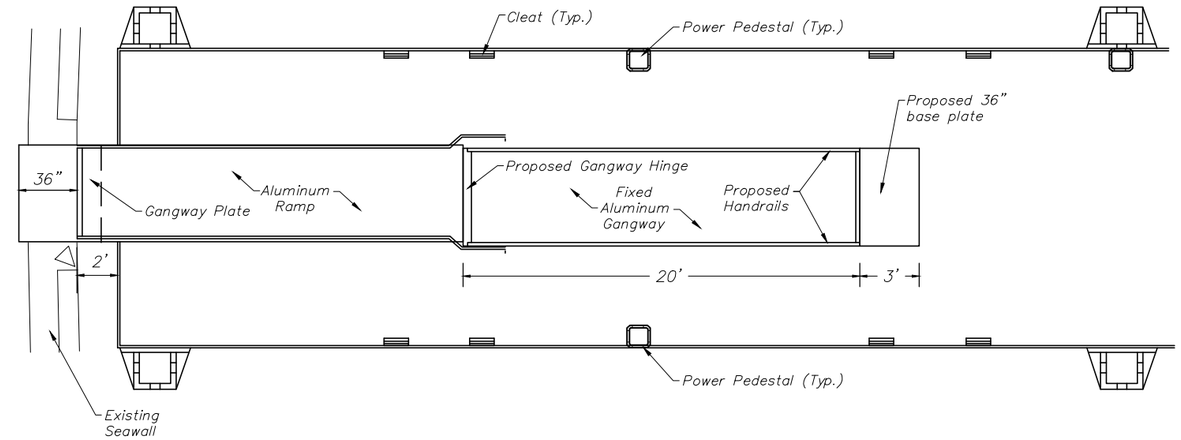

PLAN VIEW

N.T.S.

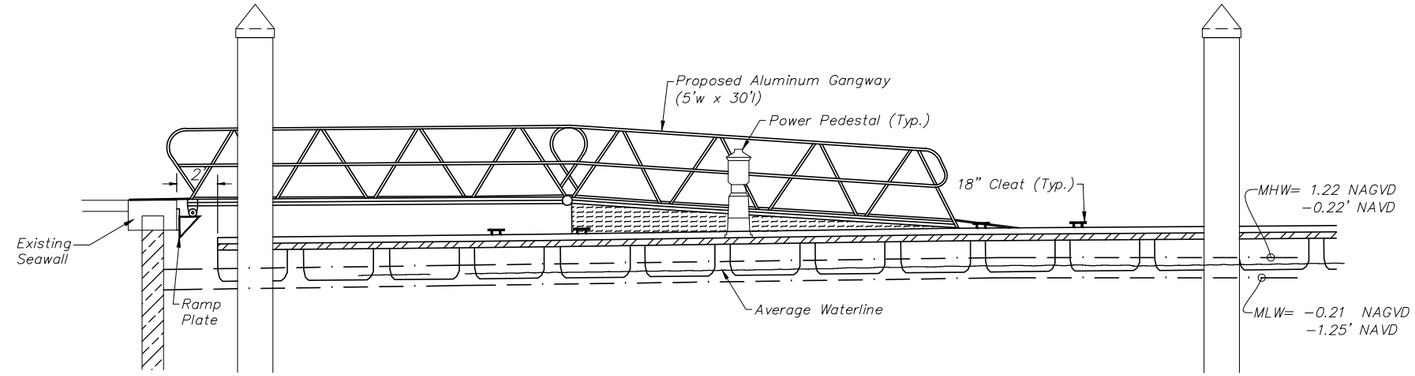

CROSS SECTION B-B

N.T.S.

Revision	By	Appd.	YY.MM.DD

Issued	By	Appd.	YY.MM.DD

Seal

CARLOS M. HERDOCIA, P.E.
REGISTERED ENGINEER NO. 47660
STATE OF FLORIDA

Consultants

Stantec
901 Ponce de Leon Blvd. Suite 900
Coral Gables, Florida 33134
www.stantec.com

The Contractor shall verify and be responsible for all dimensions. DO NOT scale the drawing - any errors or omissions shall be reported to Stantec without delay.
The Copyrights to all designs and drawings are the property of Stantec. Reproduction or use for any purpose other than that authorized by Stantec is forbidden.

CITY OF KEY WEST
SAILFISH PIER DOCK REPLACEMENT
Key West, Florida

File Name:

DS	SC	DS	14.01.31
Dwn.	Chkd.	Dsgn.	YY.MM.DD

CROSS SECTIONS

Project No.	Scale
215612745	SEE PLANS

Drawing No.	Sheet	Revision
C07	of 27	

V:\2156\active\215612745\civil\drawing\215612745 Detail Docks.dwg
2016/07/19 8:35 AM By: Morales, Raul

ORIGINAL SHEET - ANSI D HORIZ

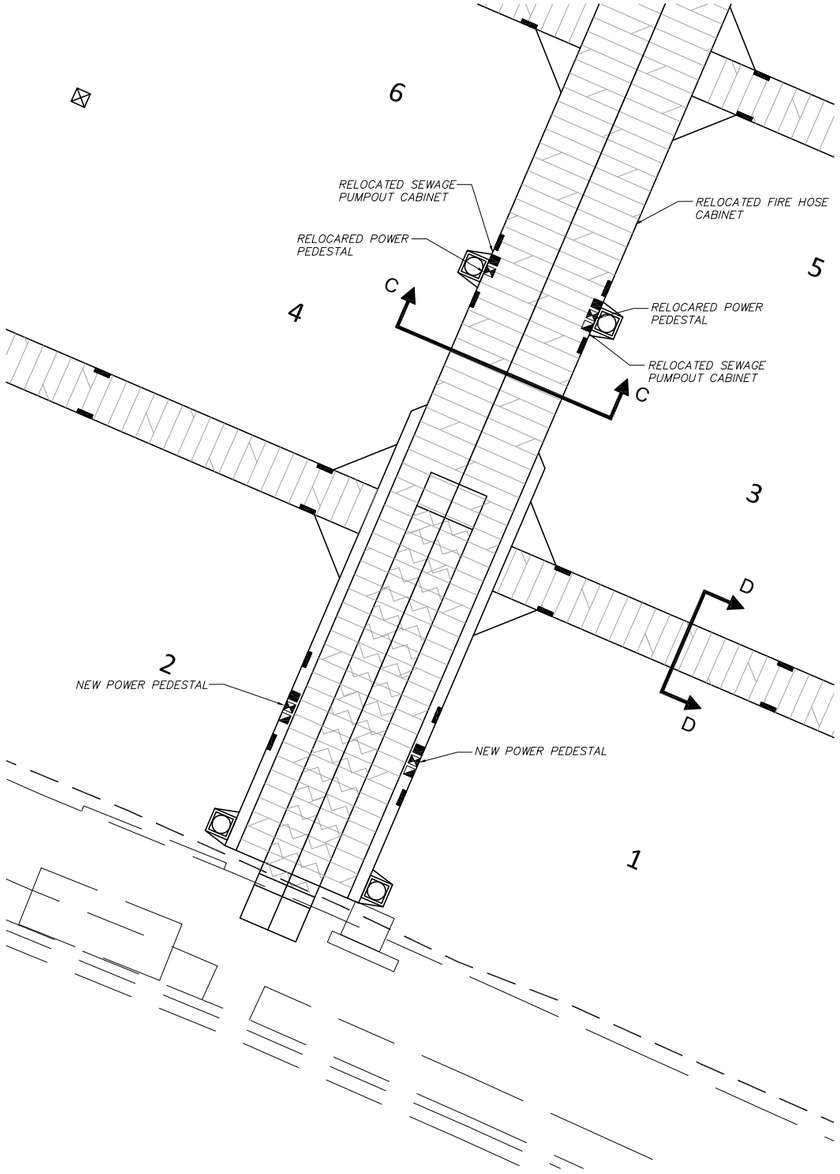

TYPICAL PEDESTAL /CABINET LOCATION

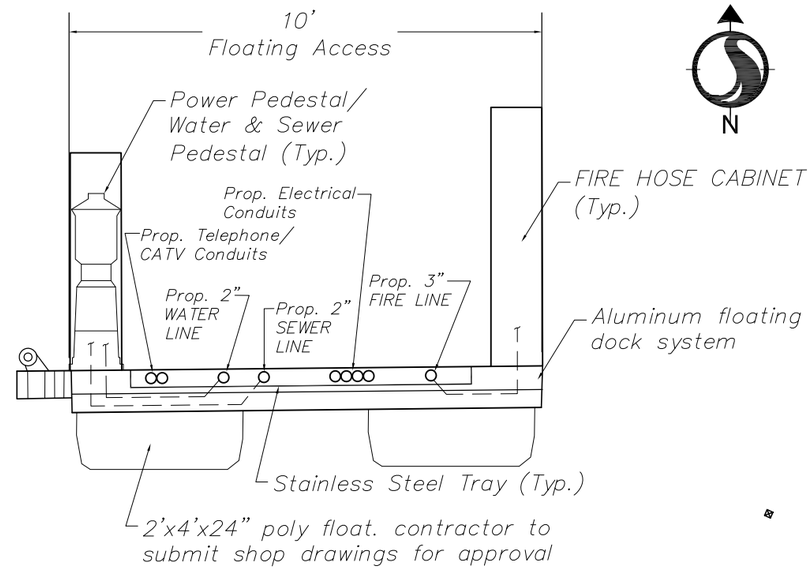

SECTION C–C

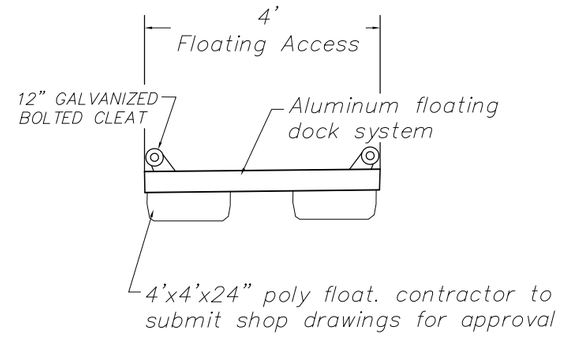

SECTION D–D

NOTES:

1) POSITION UTILITY PEDESTAL AND CABINETS AS CLOSE TO SIDE OF MAIN PIER AS POSSIBLE TO MAXIMIZE CLEAR SPACE FROM EQUIPMENT UP TO FINGER PIER.

2) ALL UTILITIES SHALL BE RUN IN STAINLESS STEEL TRAYS.

3) SEWER LINE, WATER LINE, FIRE LINE, POWER LINE SHOWN FOR COORDINATION ONLY. SEE CONSTRUCTION PLANS OF OTHER TRADES FOR ADDITIONAL INFORMATION.

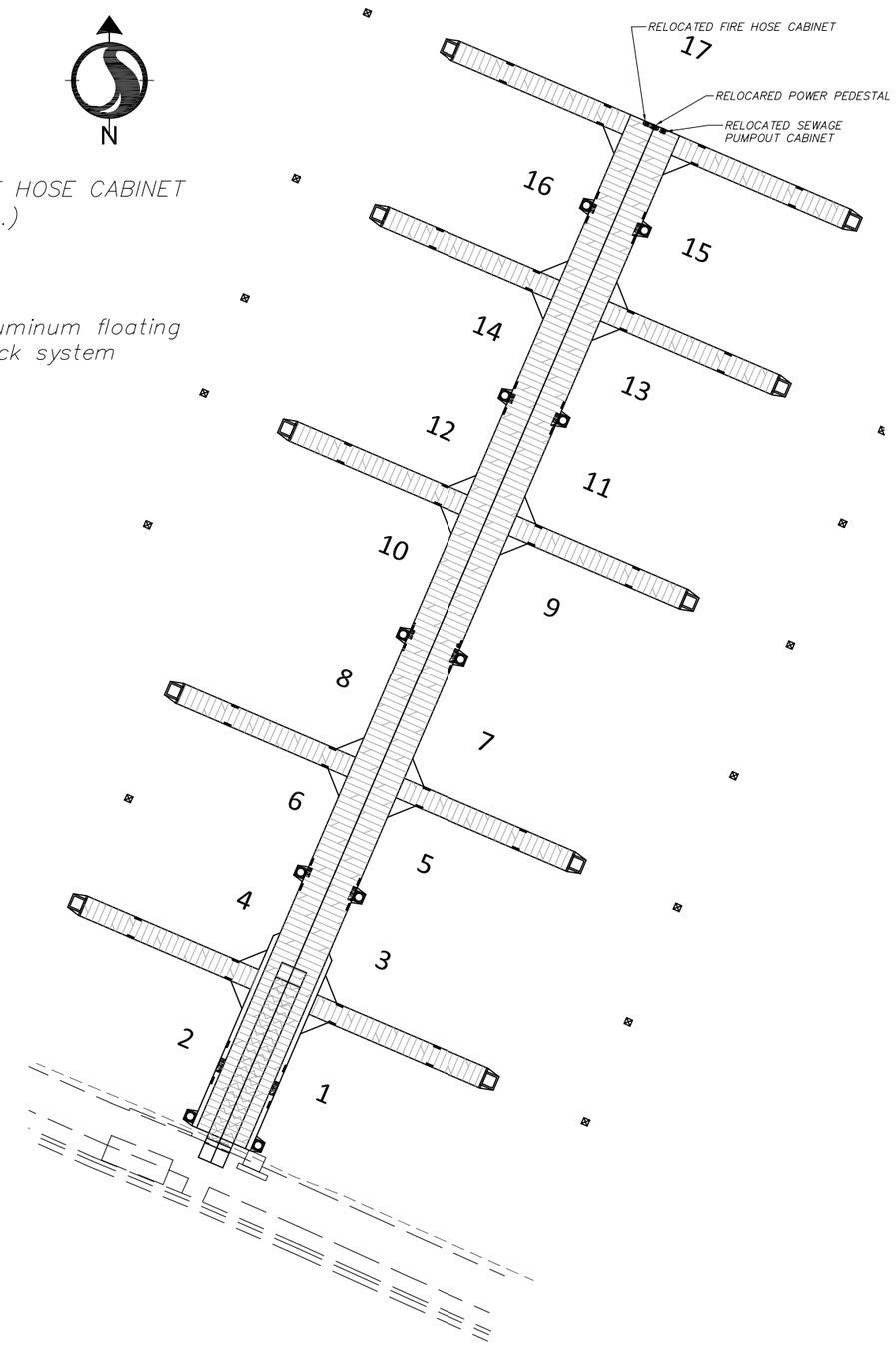

OVERALL PEDESTAL CABINET LOCATION

811 KNOW WHAT'S BELOW ALWAYS CALL 811 BEFORE YOU DIG
It's fast. It's free. It's the law.
www.callsunshine.com

CONSTRUCTION NOTE:
Location of existing facilities as shown on construction drawings are from available records. The Engineer assumes no responsibility for the accuracy of the facilities shown or for any facility not shown. Verify the elevation, type of pipes and location of existing facilities prior to construction. If an existing facility is found to conflict with the proposed construction upon excavation the contractor shall immediately notify the engineer of record so that appropriate measures can be taken to resolve the problem. Contractor to notify Owner and Sunshine State One Call of Florida, Inc. @ 811 at Least Forty Eight (48) Hours Prior to Excavating. Evidence of such notice shall be furnished to Stantec prior to excavating.

Revision	By	Appd.	YY.MM.DD

Issued	By	Appd.	YY.MM.DD

Seal

CARLOS M. HERDOCIA, P.E.
REGISTERED ENGINEER NO. 47660
STATE OF FLORIDA

Consultants

Stantec
901 Ponce de Leon Blvd. Suite 900
Coral Gables, Florida 33134
www.stantec.com

The Contractor shall verify and be responsible for all dimensions. DO NOT scale the drawing - any errors or omissions shall be reported to Stantec without delay.
The Copyrights to all designs and drawings are the property of Stantec. Reproduction or use for any purpose other than that authorized by Stantec is forbidden.

CITY OF KEY WEST
SAILFISH PIER DOCK REPLACEMENT
Key West, Florida

File Name:

DS	SC	DS	14.01.31
Dwn.	Chkd.	Dsgn.	YY.MM.DD

UTILITY DOCKS

Project No.	Scale
215612745	SEE PLANS

Drawing No.	Sheet	Revision
C08	of 27	

V:\215612745\active\215612745\civil\drawing\215612745_utilities.dwg
2019/07/10 2:23 PM By: Morales, Yoy
ORIGINAL SHEET – ANSI D HORIZ

EXISTING MOORING PILES TO BE REMOVED AS REQUIRED. CONTRACTOR TO REPLACE REMOVED PILES WITH NEW ONES AFTER COMPLETION OF WORK ON SAILFISH PIER . REPLACEMENT OF PILES TO BE COORDINATED WITH THE CITY MARINA MANAGER.

Revision	By	Appd.	YY.MM.DD

Issued	By	Appd.	YY.MM.DD

Seal

CARLOS M. HERDOCIA, P.E.
REGISTERED ENGINEER NO. 47660
STATE OF FLORIDA

Consultants

Stantec
901 Ponce de Leon Blvd. Suite 900
Coral Gables, Florida 33134
www.stantec.com

The Contractor shall verify and be responsible for all dimensions. DO NOT scale the drawing - any errors or omissions shall be reported to Stantec without delay.
The Copyrights to all designs and drawings are the property of Stantec. Reproduction or use for any purpose other than that authorized by Stantec is forbidden.

CITY OF KEY WEST
SAILFISH PIER DOCK REPLACEMENT
Key West, Florida

File Name:

DS	SC	DS	14.01.31
Dwn.	Chkd.	Dsgn.	YY.MM.DD

RELOCATION PLAN

Project No.	Scale	
215612745	SEE PLANS	
Drawing No.	Sheet	Revision
C09	of 27	

\\A1565\active\215612745\civil\drawing\215612745_utilities.dwg
2016/07/19 8:35 AM By: Morales, Raul

ORIGINAL SHEET – ANSI D HORIZ

PLAN SYMBOLS

- A — LUMINAIRE TYPE DESIGNATION
- 3 — CIRCUIT NUMBER
- (a) — SWITCH REFERENCE
- 1x4 FLUORESCENT TROFFER, SURFACE MTD
- 2x4 FLUORESCENT TROFFER, SURFACE MTD
- 2x2 FLUORESCENT TROFFER, SURFACE MTD
- 1x4 FLUORESCENT TROFFER, RECESSED
- 2x4 FLUORESCENT TROFFER, RECESSED
- 2x2 FLUORESCENT TROFFER, RECESSED
- GENERAL PURPOSE INDUSTRIAL FLUORESCENT, SIZE PER PLANS
- LUMINAIRE w/ EMERGENCY BATTERY PACK
- UNSWITCHED LUMINAIRE
- HID, POLE MTD w/ SINGLE SQUARE HEAD
- HID, POLE MTD w/ DOUBLE SQUARE HEAD
- HID, POLE MTD w/ SINGLE ROUND HEAD
- HID, POLE MTD w/ DOUBLE ROUND HEAD
- SURFACE MTD
- RECESSED
- WALL MTD
- EXIT, SURFACE MTD
- EXIT, WALL MTD
- EMERGENCY, WALL MTD
- EMERGENCY w/ EXIT AND EMERGENCY BATTERY PACK, WALL MTD
- SINGLE POLE, MTD 48" AFF UNO
- 2-GANG, MTD 48" AFF UNO
- 3-GANG, MTD 48" AFF UNO
- 4-GANG, MTD 48" AFF UNO
- 2P — TWO POLE, MTD 48" AFF UNO
- 3(b) — THREE WAY, MTD 48" AFF UNO, (LOWER CASE LETTER INDICATES SWITCH CONTROL LEG)
- K — KEY OPERATED, MTD 48" AFF UNO
- P — PILOT LIGHT, MTD 48" AFF UNO
- RECEPTACLE 20A SINGLE, MTD 18" AFF UNO
- RECEPTACLE 20A DUPLEX, MTD 18" AFF UNO
- RECEPTACLE 20A SPLIT FEED, MTD 18" AFF UNO
- RECEPTACLE 20A FOURPLEX, MTD 18" AFF UNO
- RECEPTACLE 20A DUPLEX, CLG MTD
- RECEPTACLE 20A FOURPLEX, CLG MTD
- RECEPTACLE 20A DUPLEX, FLR MTD
- RECEPTACLE 20A FOURPLEX, FLR MTD
- ?? — RECEPTACLE 20A DUPLEX, MTD 18" AFF UNO
  - GFCI: GROUND FAULT CIRCUIT INTERRUPTER
  - IG: ISOLATED GROUND
  - SH: SHUTTER SAFETY
  - SP: SURGE PROTECTION
  - WP: WEATHERPROOF
- RECEPTACLE DECONTACTOR, MTD 18" AFF UNO
- 50A — RECEPTACLE, SPECIAL USE, RATING NOTED
- RECEPTACLE 208V, MTD 18" AFF UNO
- RECEPTACLE REEL CORD
- JUNCTION BOX, SURFACE MTD
- JUNCTION BOX, WALL MTD
- JUNCTION BOX, FLR MTD
- PANELBOARD, NORMAL POWER
- PANELBOARD, EMERGENCY POWER
- 5HP — MOTOR, HORSEPOWER NOTED
- DAMPER MOTOR
- 30A — DISCONNECT SWITCH NON-FUSED, BUSS RATING NOTED
- 30AT 30AF — DISCONNECT SWITCH FUSED, BUSS (AF) AND FUSE (AT) RATING NOTED
- 1 — CONTACTOR, NEMA SIZE NOTED
- 1 — STARTER, NEMA SIZE NOTED
- 1 — COMBINATION MOTOR STARTER, NEMA SIZE NOTED
- T — TRANSFORMER
- PUSHBUTTON
- HH — HAND HOLE
  - AHH: ANALOG HAND HOLE 4-20mA SIGNAL, ETHERNET FIBER/UPT, TEL
  - CHH: CONTROL HAND HOLE IZO/DIGITAL/DISCRETE SIGNAL, 120V POWER
  - PHH: POWER HAND HOLE 480V/277V/208V
- CONDUIT UP
- CONDUIT DOWN
- CONDUIT STUB
- CONDUIT HOMERUN, EXPOSED
- CONDUIT HOMERUN, UNDERGROUND OR CONCEALED
- 2T — TELEPHONE, MTD 18" AFF UNO
- 1D — DATA, MTD 18" AFF UNO
- 2T 1D — TEL/DATA, MTD 18" AFF UNO
- 2V — TELEPHONE, CLG MTD
- 1D — DATA, CLG MTD
- 2V — TELEPHONE, FLR MTD
- 1D — DATA, FLR MTD
- SC CONNECTORS, 19" RACK MTD
- CAT6 PATCH PANEL, 110 PUNCH BLOCKS, 19" RACK MTD
- FAA — FIRE ALARM ANNUNCIATOR
- FACP — FIRE ALARM CONTROL PANEL
- FIRE ALARM EVACUATION COMBINATION AUDIBLE AND VISIBLE APPLIANCE (HORN/STROBE), WALL MTD w/ LENS 80" MIN & 96" MAX AFF
- FIRE ALARM EVACUATION VISIBLE APPLIANCE (STROBE), CLG MTD
- FIRE ALARM EVACUATION VISIBLE APPLIANCE (STROBE), WALL MTD w/ LENS 80" MIN & 96" MAX AFF
- X — FIRE ALARM HEAT DETECTOR
- P — FIRE ALARM MANUAL PULL STATION, WALL MTD w/ OPERABLE PART 42" MIN & 48" MAX AFF
- FIRE ALARM SMOKE DETECTOR, DUCT MTD w/ SAMPLE TUBES
- X — FIRE ALARM SMOKE DETECTOR, CLG MTD
- FS — FIRE SPRINKLER RISER FLOW SWITCH, COORDINATE EXACT REQUIREMENTS PRIOR TO ROUGH-IN
- TS — FIRE SPRINKLER RISER VALVE TAMPER SWITCH, COORDINTE EXACT REQUIREMENTS PRIOR TO ROUGH-IN
- OCCUPANCY SENSOR, SURFACE MTD
- OCCUPANCY SENSOR, WALL MTD
- 125kHz RFID PROXIMITY READER
- D — DOOR CONTACT
- K — SECURITY KEYPAD
- EP — EGRESS PIR FOR DOOR SHUNT
- 360° PIR/GLASS BREAK DETECTOR
- E — REQUEST TO EXIT PUSHBUTTON
- P — PANIC/DURESS PUSHBUTTON
- MA — INTRUSION ALARM CONTACT
- ES — ELECTRIC DOOR STRIKE
- EL — ELECTRIC LOCK w/ INTERNAL RELAY
- S — SPEAKER, CONE TYPE (PUBLIC ADDRESS)
- S — SPEAKER, HORN TYPE WATTAGE NOTED
- CCTV CAMERA, PTZ: PAN/TILT/ZOOM

NOT ALL SYMBOLS AND ABBREVIATIONS ARE USED

DIAGRAM SYMBOLS

- MCB — MOLDED-CASE CIRCUIT BREAKER IN
- MCP — MOTOR CIRCUIT PROTECTOR IN
- MOTOR STARTER CONTACTOR
- VACUUM CONTACTOR
- OL — MOTOR STARTER OVERLOAD RELAY
  - OL = THERMAL
  - EOL= ELECTRONIC
- R — MOTOR PROTECTION RELAY
- SOLID STATE REDUCED VOLTAGE STARTER
- 10A — FUSE, RATING NOTED
- TRANSFORMER, DELTA/WYE
- GROUND
- AUTOMATIC TRANSFER SWITCH
- DISCONNECT SWITCH
- POTENTIAL TRANSFORMER
- 3 PHASE, 3 WIRE, DELTA
- 3 PHASE, 4 WIRE, WYE, GND
- 3 — CURRENT TRANSFORMER, RATIO AND NUMBER OF CT'S AS NOTED
- 100/5 — CURRENT TRANSFORMER, ZERO SEQUENCE TYPE
- BUSHING TYPE CURRENT TRANSFORMER
- ISOLATING FUSE SWITCH, HIGH VOLTAGE PRIMARY FUSE CUT OUT, DRY
- ISOLATING FUSE SWITCH FOR ON-LOAD SWITCHING
- LIGHTNING ARRESTER
- CAPACITOR
- DRAWOUT CIRCUIT BREAKER
- 52 — POWER CIRCUIT BREAKER, FIXED TYPE, LOW OR MEDIUM VOLTAGE
- 52 — POWER CIRCUIT BREAKER, DRAWOUT TYPE, LOW OR MEDIUM VOLTAGE
- LOADBREAK ELBOW
- DISCONNECT SWITCH, GROUP OPERATED
- DISCONNECT SWITCH, STICK OPERATED
- DISCONNECT SWITCH, SELECTOR OR DOUBLE THROW
- DISCONNECT SWITCH WITH ARCING HORNS, MANUALLY OPERATED
- POTHEAD
- FEC — FIRE EXTINGHISHER CABINET, SEE FIRE PROTECTION PLANS
- FHC — FIRE HOSE CABINET, SEE FIRE PROTECTION PLANS
- GFMS — GROUND FAULT MONITORING SYSTEM W/ AUDIBLE AND VISIBLE ALARM.
- PP — EXISTING POWER PEDESTAL POWER PEDESTALS ARE EXISTING TO BE REUSED. PEDESTALS WILL BE STORED BY OWNER. CONTRACTOR SHALL INSTALL AND MAKE ALL CONNECTIONS.
- W — WATER BOX, SEE PLUMBING PLANS
- ELECTRICAL PANELBOARD WITH NEMA 3R/SS WITH POWDERCOAT FINISH, SE PANEL SCHEDULES FOR ADDITIONAL INFORMATIOI
- PAD MOUNTED UTILITY TRANSFORMER COORDINATE WITH LOCAL UTILITY COMPANY
- SPD — SURGE PROTECTION DEVICE - SEE SPECIFICATIONS
- 1 — DETAIL NUMBER
- E101 — DRAWING NUMBER WHERE DRAWN

ABBREVIATIONS

A	AMPERE
ABV	ABOVE
AC	ALTERNATING CURRENT
ADD	ADDENDUM
AF	AMPERE FRAME
AFF	ABOVE FINISHED FLOOR
AFG	ABOVE FINISHED GRADE
AIC	ASYMMETRICAL INTERRUPTING CAPACITY
ARCH	ARCHITECT/ARCHITECTURAL
AT	AMPERE TRIP
ATS	AUTOMATIC TRANSFER SWITCH
AUTO	AUTOMATIC
AV	AUDIO/VISUAL
CHG	BATTERY CHARGER
C	CONDUIT
CAB	CABINET
CAT6	CATEGORY 6
CB	CIRCUIT BREAKER, COMBINER BOX
CC	CHARGE CONTROLLER
CCTV	CLOSED CIRCUIT TELEVISION
CLG	CEILING
COMB	COMBINATION
CONN	CONNECTION, OR CONNECT
CONTR	CONTRACTOR
COOD	COORDINATE
CPT	CONTROL POWER TRANSFORMER
CT	CURRENT TRANSFORMER
DC	DIRECT CURRENT, CONVERTER
DET	DETAIL
DIST	DISTRIBUTION
DIV	DIVISION
DN	DOWN
DS	DISCONNECT SWITCH
DWG	DRAWING
EA	EACH
ELECTELECTRICAL	
EMCS	ENERGY MANAGEMENT AND CONTROL SYSTEMS EQUIP EQUIPMENT
EXPL	EXPLOSION PROOF
EWC	ELECTRIC WATER COOLER
F	FUSED
FA	FIRE ALARM
FD	FUSIBLE DISCONNECT
FIN	FINISHED FL FLOOR
FUT	FUTURE
FIXT	FIXTURE LTG
FVNR	FULL VOLTAGE NON-REVERSING
G	GENERATOR
GND	GROUND
GFI	GROUND FAULT INTERRUPTER
HOA	HAND - OFF - AUTO
HP	HORSEPOWER
HTG	HEATING
HTR	HEATER
Hz	HERTZ
IC	INTERRUPTING CAPACITY
I/C	INTERCOM
INV	INVERTER
JB	JUNCTION BOX
kW	KILOWATTS
kVA	KILOVOLT AMPERE
LP	LIGHTING PANEL
LTG	LIGHTING, LIGHT OR LIGHTS
LTFC	LIQUIDTIGHT FLEXIBLE CONDUIT
MAX	MAXIMUM
MCB	MOLDED CASE BREAKER
MCC	MOTOR CONTROL CENTER
MCP	MOTOR CIRCUIT PROTECTION
MECH	MECHANICAL
MIN	MINIMUM
MFGR	MANUFACTURER
MTR	MOTOR
MSS	MOTOR STARTER SWITCH
MTD	MOUNTED
MTS	MANUAL TRANSFER SWITCH
N.C.	NORMALLY CLOSED
NF	NON FUSED
NO	NORMALLY OPEN
ø	PHASE
PB	PUSH BUTTON
PNL	PANEL
PP	POWER PEDESTAL
PR	PAIR
PT	POTENTIAL TRANSFORMER
PVC	POLYVINYL CHLORIDE
PWR	POWER
RECEPT	RECEPTACLE
RM	ROOM
RMC	RIGID METAL CONDUIT
SA	SUB ARRAY
SHT	SHEET
SPEC	SPECIFICATION
SPD	SURGE PROTECTION DEVICE
SPP	SUB PLANT PANEL
SPR	SUB PLANT RACK
STR	STARTER
ST	SHUNT TRIP
STP	SHIELDED TWISTED PAIR
SW	SWITCH
SWBD	SWITCHBOARD
SWGR	SWITCHGEAR
TC	TIME CLOCK
TDR	TIME DELAY RELAY
TEL	TELEPHONE
TERM	TERMINAL
UTP	UNSHIELDED TWISTED PAIR
XFMR	TRANSFORMER
TV	TELEVISION
TYP	TYPICAL
UNO	UNLESS NOTED OTHERWISE
UG	UNDERGROUND
V	VOLTS
VA	VOLT AMPERE
VFD	VARIABLE FREQUENCY DRIVE
W	WATTS
WP	WEATHERPROOF

Revision	By	Appd.	YY.MM.DD
8			
7			
6			
5			
4			
3			
2			
1			

Issued	By	Appd.	YY.MM.DD
H			
G			
F			
E			
D			
C			
B			
A			

Seal

MARTIN S. ARMENTA, P.E.
REGISTERED ENGINEER NO. 75333
STATE OF FLORIDA

Consultants

Stantec
901 Ponce de Leon Blvd. Suite 900
Coral Gables, Florida 33134
www.stantec.com

The Contractor shall verify and be responsible for all dimensions. DO NOT scale the drawing - any errors or omissions shall be reported to Stantec without delay.
The Copyrights to all designs and drawings are the property of Stantec. Reproduction or use for any purpose other than that authorized by Stantec is forbidden.

CITY OF KEY WEST
SAILFISH PIER DOCK REPLACEMENT
Key West, Florida

File Name:

RM	NJ	MA	15.08.11
Dwn.	Chkd.	Dsgn.	YY.MM.DD

ELECTRICAL LEGEND

Project No.	Scale	
215612745	NO SCALE	
Drawing No.	Sheet	Issue /Revision
E01	of 27	C/0

I:\215612745\active\215612745\electrical\drawing\11872E-001_lgnd.dwg
2016/01/19 9:35 AM By: Morales, Rod

ORIGINAL SHEET - ANSI D HORIZ

SECTION 16410

SPECIAL REQUIREMENTS

PART 1 - GENERAL

1.01 AUXILIARIES AND ACCESSORIES

A. Include all auxiliaries and accessories for complete and properly operating systems.

B. Provide and install all electrical systems and any necessary accessories as per the National Electrical Code (NEC) Edition as adopted by the Local Authority Having Jurisdiction and local codes whether or not specified herein or shown on drawings. The content of these specifications (Division 16) and contract documents in general only refers to work required above and beyond the requirements of the NEC and applicable local codes.

1.02 LAYOUT OF WORK

A. Drawings are diagrammatic, correlate final equipment locations with governing architectural and structural drawings. Lay out before installation so that all trades may install equipment in spaces available. Provide coordination as required for installation in a neat and workmanlike manner.

1.03 INVESTIGATION OF SITE

A. Check site and existing conditions thoroughly before bidding. Advice Engineer of discrepancies or questions noted.

1.04 SUPERVISION OF THE WORK

A. Provide field Superintendent who has had a minimum of four (4) years previous successful experience on projects of comparable size and complexity. Superintendent shall be present at all times that work under this division is being installed or affected. Superintendent shall have passed a proctored H.H. Block Journeyman exam and shall be a licensed journeyman. At least one member of the electrical contracting firm shall hold a State Master Certificate of Competency.

1.05 COORDINATION

A. Provide all required coordination and supervision where work connects to or is affected by work of others, and comply with all requirements affecting this Division. Work required under other Divisions, specifications or drawings to be performed by this Division shall be coordinated with the Contractor and such work performed at no additional cost to Owner.

1.06 BASIS FOR WIRING DESIGN

A. The drawings and specifications describe specific sizes of switches, breakers, conduits, conductors, and other items of wiring equipment. These sizes are based on specific items of power consuming equipment. Wherever the contractor provides power consuming equipment which differs from drawings and specifications, the wiring and associated circuit components for such equipment shall be changed to match at no additional expense to the Owner.

1.07 PROTECTION AND CLEAN UP

A. Suitably protect all equipment furnished under this Division during construction. Restore all damaged surfaces and items to "like new" condition before a request for substantial completion inspection.

1.08 MATERIALS

A. Reference: "General Conditions of the Contract".

B. Where a Manufacturer's model number is listed, this model shall set the standard of quality and performance required. Where no brand name is specified, the source and quality shall be subject to Engineer's review and acceptance.

1.09 SUBSTITUTIONS

A. Each Bidder represents that his bid is based upon the equipment and materials described in Division 16 of the specifications.

B. Substitution submittals shall include the name of the material or equipment for which it is to be substituted, drawings, cuts, performance and test data and any other information necessary for the Engineer to determine that the equipment meets all specifications and requirements. Pre-approval of proposed substitution is required for equipment supplied under this Division and must be submitted 10 days prior to bid opening.

C. Substituted equipment or optional equipment where permitted and approved, must conform to space requirements. Any substituted equipment that cannot meet space requirements, whether approved or not, shall be replaced at the Contractor's expense. Any modifications of related systems as a result of substitutions shall be made at the Contractor's expense.

1.10 TECHNICAL INFORMATION BROCHURES AND SUBMITTALS

A. Submit technical information brochures at start of construction or within 30 days after award of the contract. Each brochure shall consist of an adequately sized, hard-cover, 3-ring binder for 8-1/2" x 11" sheets. Provide correct designation on outside cover and on end of brochure. When, in the judgment of the Engineer, one binder is not enough to adequately catalog all data, an additional binder will be required and data split as directed by the Engineer.

B. The first sheet in the brochure shall be an index page listing all equipment contained in the brochure which pertains to the project. The second sheet shall be prepared by the Contractor, and shall list manufacturer's authorized representative for this project. The third sheet shall list manufacturer's authorized maintenance company addresses for equipment on this project.

C. Provide reinforced separation sheets tabbed with the appropriate specification reference number and typed index for each section.

D. Technical information consisting of marked catalog sheets or shop drawings shall be inserted in the brochure in proper order on all items herein specified or shown on drawings.

E. The General Contractor shall review the brochures before submitting to the Engineer. No request for payment will be considered until the brochure has been reviewed and submitted for checking.

F. Shop Drawings

1. Drawings shall include identification of project and names of Architect, Engineer, General Contractor, Subcontractor and/or Supplier as applicable. Data shall be numbered sequentially and indicate in general.

A. Fabrication and erection dimensions.

B. Arrangements and Sectional views.

C. Necessary details, including complete information for making connections with other work.

D. Kinds of material and finishes.

E. Descriptive names of equipment.

F. Modifications and options to standard equipment required by the contract.

G. Leave blank area, size approximately 4 by 2-1/2 inches, near title block (for Engineer's stamp imprint).

H. In order to facilitate review of drawings, insofar as practicable, they shall be noted, indicating by cross reference the contract drawings, note, and/or specifications paragraph numbers where item(s) occur in the contract documents.

I. See specific sections of specifications for further requirements.

G. Product Data

1. Submit technical data verifying that the item submitted complies with the requirements of the specifications. Technical data shall include manufacturer's name and model number, dimensions, weights, electrical characteristics, and clearances required. Indicate all optional equipment and changes from the standard item as called for in the specifications. Furnish drawings, or diagrams, dimensioned and in correct scale, covering equipment, showing arrangement of components and overall coordination.

2. In order to facilitate review of product data, insofar as practicable, they shall be noted, indicating by cross reference the contract drawings, note, and/or specification paragraph numbers where item(s) occur in the contract documents.

3. See specific sections of specifications for further requirements.

H. Processing submittals

1. Product Data: For standard manufactured material, products and items submit copies as required under Division 1 specifications. If submittal is rejected, resubmit copies of new data.

2. Reference: "General Conditions of the Contract".

3. Note that the review of shop drawings, or other information submitted in accordance with the requirements hereinbefore specified, does not assure that the Engineer, Architect, or any other Owner's representative, attests to the dimensional accuracy or dimensional suitability of the material or equipment involved, the ability to the material or equipment involved of the mechanical/electrical performance of equipment. Review of shop drawings does not invalidate the plans and specifications if in conflict, unless a letter requesting such change is submitted and approved on the Engineer's letterhead.

I. Delays

1. Contractor is responsible for any delays in job progress accruing directly or indirectly from late submissions or resubmissions of shop drawings, product data, or samples.

1.11 PROGRESS AND RECORD DRAWINGS

A. Keep two sets of black or blue on white prints at the job site. Neatly markup design drawings each day as components are installed taking care to reflect any variations. Different colored pencils shall be used for different systems. All items on progress drawing shall be shown in actual location installed. Change any equipment schedules to agree with items actually furnished.

B. Prior to request for final payment furnish a set of "as-built" reproducibles and two sets of prints to the Engineer, unless otherwise specified.

1.12 OPERATING INSTRUCTIONS

A. Submit for checking a specific set of written operating instructions on each item which require instructions to operate. After approval, provide one copy for insertion in each technical information brochure.

1.13 MAINTENANCE INSTRUCTIONS

A. Submit for approval maintenance information consisting of manufacturer's printed instructions and parts lists for each major item or equipment. After approval, insert information in each technical information brochure.

1.14 SYSTEMS GUARANTEE

A. The work required under this division shall include a one-year guarantee. This guarantee shall be by the Contractor to the Owner for any defective workmanship or material which has been furnished under this contract at no cost to the Owner for a period of one year from the date of substantial completion of the system. This guarantee shall not include light bulbs in service after one month from date of substantial completion of the system. Explain the provisions of guarantee to the Owner at the "Demonstration of Completed System". Submit for checking a specific set of written operating instructions on each item which require instructions to operate. After approval, provide one copy for insertion in each technical information brochure.

1.15 FINAL INSPECTION

A. All work on the project shall be completed, and all forms and other information shall be submitted for approval one week before the request for final inspection.

1.16 EQUIPMENT TO BE OF SINGLE MANUFACTURER

A. In general, all like equipment shall be supplied and manufactured by same manufacturer.

1.17 GENERAL

A. Where the requirements of another Division, Section or part of these specifications exceed the requirements of this Division, those requirements shall govern.

END OF SECTION

SECTION 16020

WORK INCLUDED

PART 1 - GENERAL

1.01 DESCRIPTION OF SYSTEM

A. The work required under this Division shall include all materials, labor and auxiliaries required to install a complete and properly operating electrical system. The electrical system required under this Division consists basically of, but is not limited to the following:

1. Complete distribution system for marine shore power including feeders from utility company transformer to main switchgear and connections to power pedestals.

2. A secondary grounding system as indicated and specified.

3. Power distribution panelboards.

4. Main power/surge protection systems.

END OF SECTION

SECTION 16025

CODES, FEES, AND STANDARDS

PART 1 - GENERAL

1.01 CODES AND FEES

A. Install in accordance with latest edition of the National Electric Code and the regulations of governing local, and other applicable codes, including the utility company, pay for all required licenses, fees and inspections.

B. All work and equipment under this Division shall be in strict compliance with the applicable provisions of the latest editions of the following codes and standards in force at the time of construction.

1. Florida Building Code

2. National Electrical Code (NEC)

3. Requirements of local power company

1.02 STANDARDS

A. All materials shall be new and free of defects, and shall be UL listed, gear the UL label or be labeled or listed with an approved, nationally recognized electrical testing agency. Where no labeling or listing service is available for certain types of equipment, test data shall be submitted to prove to the Engineer that equipment meets or exceeds available standards.

1.03 UTILITY COMPANY FEES, CHARGES, COSTS

A. It is the Contractor's responsibility to contact the required utility company to determine if any fees, charges or costs will be due the utility company. Fees for temporary power shall be included in this Contractor's bid price. Fees for permanent power will be paid by the Owner.

END OF SECTION

SECTION 16110

RACEWAYS AND CONDUITS

PART 1 - GENERAL

1.01 DESCRIPTION

A. Description of System

1. The entire installation shall be in PVC plastic conduit, unless specifically noted otherwise. Only schedule 40 PVC shall be used for all raceways trapped underground or under dock structure. Minimum conduit size shall be ¾" unless noted otherwise on drawings. All conduits shall be UL listed and labeled. Conduit sizes shown on the drawings are to aid the Contractor in bidding only. The Contractor is responsible for conduit sizes as required by NEC fill tables.

1.02 SUBMITTALS

A. Product Data

1. Product data shall be submitted on conduit and conduit fittings. Product data shall show compliance with this section of the specifications, including UL label, manufacturer, and manufacturer's written installation instructions.

PART 2 - PRODUCTS

2.01 PVC CONDUIT

A. PVC conduit shall be composed of high impact PVC (Polyvinyl Chloride C-200 Compound) and shall conform to industry standards, and be UL listed in accordance with Article 352 of National Electrical Code for underground and exposed use. Materials must have tensile strength of 55 PSI, at 70°F, flexural strength of 11,000 PSI, compression strength of 8600 PSI. Manufacturer shall have five years' extruding PVC experience.

2.02 EXPANSION FITTINGS

A. Conduit expansion fittings shall be schedule 40 PVC shall have an expansion chamber to allow approximately two-inch movement parallel to conduit run in either direction from normal. They shall have factory-installed packing. Expansion fittings shall be spaced as recommended by the manufacturer.

PART 3 - EXECUTION

3.01 INSTALLATION

A. All raceways shall be run in neat and workman like manner and shall be properly supported in accordance with latest edition of NEC with approved stainless steel conduit clamps, hanger rods and structural fasteners.

B. All raceway runs, whether terminated in boxes or not, shall be capped during the course of construction and until wires are pulled in, and covers are in place. No conductors shall be pulled into raceways until construction work which might damage the raceways has been completed.

C. All raceways shall have an insulated copper system ground conductor throughout the entire length of circuit installed within conduit in strict accordance with NEC. Grounding conductor shall be included in total conduit fill determining conduit sizes, even though not included or shown on drawings. Grounding conductors run with feeders shall be bonded to portions of conduit that are metal by approved ground bushings.

D. Raceways which do not have conductors furnished under this division of the specifications shall be left with an approved nylon pull cord in raceway.

END OF SECTION

SECTION 16120

WIRES AND CABLES

PART 1 - GENERAL

1.01 GENERAL PROVISIONS

A. Conductors

1. All conductors shall be copper type THHN/THWN, type "G", type "W" or type "DLO" as indicated on drawings. No aluminum wiring shall be permitted. All wire shall be sized as shown on the drawings.

2. Wiring at the transition to the floating dock(s) and within floating dock(s) shall be type "DLO" or "W" cable single conductor or "O" cable multi-conductor cable.

3. Wiring from the distribution panel to the power pedestal shall be type "G" cable multi-conductor cable.

B. Taps and Splices

1. All taps and splices in manholes or in ground pull boxes shall be submersible type connectors. Basis of design: CMC type SSBC-S rubber insulated secondary connections. Install sleeve kits as per manufacturer's installation instructions.

C. Color Coding

1. All power feeders shall be wired with industry standard color-coded wire or shall have black insulation and be similarly color-coded with tape or paint in all junction boxes and panels. Tape or paint shall completely cover the full length of conductor insulation within the box or panel.

1.02 SUBMITTALS

A. Submit manufacturer's data sheets on all major types of wires and cables including splicing tape, and terminating/splicing lugs or connectors and cable sleeves.

END OF SECTION

SECTION 16410

ELECTRIC SERVICE

PART 1 - GENERAL

1.01 DESCRIPTION

A. Description of System

1. The electrical utility company will provide the electrical service of the characteristics as shown on the drawings. The Contractor's work will begin where the utility company's work ends.

2. The Contractor shall furnish all labor, materials, etc., necessary for a complete approved electrical service as required for this project, including inspection and approval by the utility and local inspection departments.

3. The Contractor shall notify the utility company in writing, with two copies to the Engineer, no later than ten (10) days after signing contracts as to when this Contractor anticipates the building power service will be required.

B. Construction Facilities

1. The facilities and equipment required to provide all electrical power consumed for construction, lighting and balancing and testing prior to final acceptance of the project shall be provided under this section of the specifications. All wiring, outlets and other work required to provide this power at the site and within the building for all trades shall be arranged for, furnished and installed under this section of the specifications including any fee, charge or cost due the utility company for temporary power installation or hook-ups.

2. Facilities shall be furnished in a neat and safe manner in compliance with governing codes, good working practices and OSHA regulations.

C. Electrical Service

1. Furnish and install secondary 120/240V, 1PH,3W service from utility XFMR as indicated. Termination at the utility transformer will be by utility company.

2. Furnish and install all miscellaneous electrical connections, devices, supporting devices, conduit, etc., as required by utility company for a complete electrical service.

D. Surge Protection

1. Provide and install surge suppressors as specified in Section 16610.

END OF SECTION

Revision	By	Appd.	YY.MM.DD
8			
7			
6			
5			
4			
3			
2			
1			

Issued	By	Appd.	YY.MM.DD
H			
G			
F			
E			
D			
C FOR 100% REVIEW	JAC	MSA	14.06.27
B FOR 60% REVIEW	JAC	MSA	14.05.16
A FOR 30% REVIEW	JAC	MSA	14.04.24

Seal

MARTIN S. ARMENTA, P.E.
REGISTERED ENGINEER NO. 75333
STATE OF FLORIDA

Consultants

Stantec
901 Ponce de Leon Blvd. Suite 900
Coral Gables, Florida 33134
www.stantec.com

The Contractor shall verify and be responsible for all dimensions. DO NOT scale the drawing - any errors or omissions shall be reported to Stantec without delay.
The Copyrights to all designs and drawings are the property of Stantec. Reproduction or use for any purpose other than that authorized by Stantec is forbidden.

CITY OF KEY WEST
SAILFISH PIER DOCK REPLACEMENT
Key West, Florida

File Name:	RM	NJ	MA	15.08.11
	Dwn.	Chkd.	Dsgn.	YY.MM.DD

ELECTRICAL SPECIFICATIONS

Project No.	Scale	
215612745	NO SCALE	
Drawing No.	Sheet	Issue /Revision
E02	of 27	C/0

Y:\215612745\active\215612745\drawing\11872E-002_specs.dwg
2016/01/19 9:16 AM By: Mendoza, Rod
ORIGINAL SHEET – ANSI D HORIZ

SECTION 16450

SECONDARY GROUNDING

PART 1 - GENERAL

1.01 WORK INCLUDED

A. Power System Grounding.

B. Communication System Grounding

C. Electrical Equipment and Raceway Grounding and Bonding.

1.02 SYSTEM DESCRIPTION

A. Ground the electrical service system neutral at service entrance equipment to metallic water service, building steel, concrete reinforcing steel, and to supplementary grounding electrodes.

B. Provide communications system grounding conductor at point of service entrance and connect to nearest effectively grounded metallic water pipe and nearest effectively grounded building structural steel member.

C. Bond together system neutrals, service equipment enclosures, exposed non-current carrying metal parts of electrical equipment, metal raceway systems, grounding conductor in raceways and cables, receptacle ground connectors, and plumbing systems.

PART 2 - PRODUCTS

2.01 MATERIALS

A. Ground rods: copper-encased steel, ¾ inch diameter, minimum length 10 feet.

PART 3 - EXECUTION

3.01 INSTALLATION

A. Provide a separate, insulated equipment grounding conductor with each feeder and branch circuit. Terminate each end on a grounding lug, bus, or bushing.

B. Connect grounding electrode conductors to metal water pipe using an approved ground clamp. Make connections to flanged piping at street side of flange. Provide bonding jumper around water meter.

C. Use minimum 6 AWG copper conductors for communications service grounding conductor, leave 10 feet slack conductor terminal board.

D. All ground connections at ground rods, building steel, and concrete reinforcing steel shall be thermofusion type.

3.02 FIELD QUALITY CONTROL

A. Inspect grounding and bonding system conductors and connections for rightness and proper installation.

END OF SECTION

SECTION 16470

PANELBOARD

PART 1 - GENERAL

1.01 WORK INCLUDED

A. Main service, lighting, and appliance branch circuit panelboard with ratings as indicated.

1.02 SUBMITTALS

A. Submit shop drawings for equipment and component devices.

B. Include outline and support point dimensions, voltage, main bus ampacity, integrated short circuit ampere rating, circuit breaker and fusible switch arrangement and sizes.

PART 2 - PRODUCTS

2.01 ACCEPTABLE MANUFACTURERS - PANELBOARDS

A. Eaton

B. Square D

C. G.E.

D. Siemens

E. or equal

2.02 PANELBOARDS

A. Panelboards shall be circuit breaker type.

B. Enclosure shall be NEMA 3R stainless steel w/white powder coated paint finish, rainproof.

C. Provide panelboards with bus ratings as scheduled.

D. All panelboards shall be fully rated with minimum integrated short circuit rating as indicated on drawings.

E. Molded case circuit breakers: bolt-on type thermal/magnetic trip circuit breakers, with common trip handle for all poles. Provide circuit breakers UL listed as type SWD for lighting circuits.

PART 3 - EXECUTION

3.01 INSTALLATION

A. Install panelboards plumb and flush with supporting structure.

B. Height: 6 Ft. to top.

C. Provide filler plates for unused spaces in panelboards.

D. Provide typed circuit directory for each branch circuit panelboard. Revise directory to reflect circuiting changes required to balance phase loads.

3.02 FIELD QUALITY CONTROL

A. Visual and mechanical inspection: Inspect for physical damage, proper alignment, anchorage, and grounding. Check proper installation and tightness of connections for circuit breakers, fusible switches, and fuses.

END OF SECTION

SECTION 16610

SURGE PROTECTIVE DEVICE (SPD)

PART 1 - GENERAL

1.01 DESCRIPTION

A. This section describes the materials and installation requirements for surge protective devices (SPD) for the protection of all AC electrical circuits from the effects of lighting induced currents, substation switching transients and internally generated transients resulting from inductive and/or capacitive load switching.

1.02 RELATED WORK SPECIFIED ELSEWHERE

A. General electrical requirements.

B. Raceways, boxes, and fittings.

C. Wire and cable.

D. Grounding.

1.03 SUBMITTALS

A. Submit shop drawings, product data and manufacturer's installation instructions.

B. The surge suppression submittals shall also include:

1. Dimensional drawing of each suppressor type indicating the following:

a. Service entrance suppressors

- Cooper bus bars for internal connections.

- Replaceable modules on each phase

- Replaceable 200,000 AIC fuses on each module.

b. Downstream suppressors

- Line to neutral, line to ground, and neutral to ground suppression paths

2. IEEE C62.41-1991 category C3 (20 KV, 10 KA, 8/20 µS waveform) clamp voltage test results from an independent test lab.

1.04 MANUFACTURERS

A. All suppressors for AC distribution and branch circuit protection within a single facility shall be provided by a single manufacturer. The same manufacturer who provides main panel suppressors shall provide suppressors for distribution and branch panels.

PART 2 - PRODUCTS

2.01 MAIN SERVICE SUPPRESSORS AT DISTRIBUTIONO PANEL

A. Suppressors shall be listed in accordance with UL 1449, standard for safety, transient voltage surge suppressors, and UL 1283 electromagnetic interference filters.

B. The unit shall provide the following suppression paths: line to ground, line to neutral, and neutral to ground.

C. Suppressors shall meet or exceed the following criteria set forth in C.U.L.

D. Suppressors shall be made of solid-state components and operate bidirectionally.

E. The suppressor shall have a response time no greater than five nanoseconds for any of the individual protection modes.

F. Suppressors shall be designed to withstand a maximum continuous operating voltage (MCOV) of not less than 115% of nominal RMS voltage.

G. Visible indication of proper suppressor connection and operation shall be provided.

H. The suppressor manufacturer shall provide certified test data confirming a "fail-short" failure mode.

I. Suppressors shall be manufactured in the United States. All major components shall also be of American manufacture.

J. Suppressor shall have a five-year warranty, incorporating unlimited replacements of suppressors if they are destroyed by transients within the warranty period.

K. Suppressor shall be an integral part of the main power distribution panel and shall be as manufactured by Advanced Protection Technologies, Inc. XTE/XHP series, or approved equal by Square D, Siemens, or G.E.

PART 3 - EXECUTION

3.01 MAIN DISTRIBUTION PANEL

A. Conductors between suppressor and point of attachment shall be kept short and straight.

B. Neutral and ground shall not be bonded together at secondary panelboard location.

END OF SECTION

SECTION 16620

GROUND MONITORING SYSTEM

PART 1 - GENERAL

1.01 DESCRIPTION

A. This section describes the materials and installation requirements for ground monitoring equipment to measure "leakage" current to ground.

1.02 RELATED WORK SPECIFIED ELSEWHERE

A. General electrical requirements

B. Raceways, boxes, and fittings.

C. Wire and cable

D. Motor controls

E. Grounding

1.03 SUBMITTALS

A. Submit shop drawings, product data and manufacturer's installation instructions.

B. The ground monitor submittals shall also include:

1. Dimensional drawings of each monitor type.

2. Panelboard mounting detail.

1.04 MANUFACTURERS

A. All monitors for AC distribution and branch circuit protection within a single facility shall be provided by a single manufacturer.

PART 2 - PRODUCTS

2.01 MAIN SERVICE MONITORS AT DISTRIBUTION PANELS

A. Monitors shall be listed in accordance with U.L. file #E173157.

B. The ground fault monitors shall be Bender Model RCM470LY-13-MA/RCMS460-D or approved equal. These devices shall monitor the insulation level of grounded single phase marina power system by measuring the ground fault leakage current.

C. The monitors shall provide advanced warning of developing faults without the problems associated with high sensitivity nuisance tripping. The monitors shall be an IEC755 type a ground fault monitor that can detect sinusoidal AC ground fault currents and pulsating DC ground fault currents.

D. The response value current shall be steplessly adjustable between 10MA and 10 A and the delay time shall be adjustable between 0 and 10 S. The relay shall be equipped with an LED bar graph indicator. An external analog meter shall be capable of being connected and by using and optional external transducer, a 4 to 20MA signal shall be available. Meter indication shall be from 10 to 100% where 100% is equal to the alarm set-point value.

E. The RCM470LY-13-MA shall be designed for use with external special U.L. listed current transformers designed to prevent nuisance tripping.

F. Monitors shall be suitable for installation into standard distribution panels.

G. Ground fault current shall be evaluated by special current transformers and converted into measuring signal.

H. When a ground fault current exceeds the alarm setup point value, the alarm LED illuminates and the alarm relay switches after the adjusted time delay. The alarm relay shall be selectable to be in the normally energized or normally de-energized mode and with or without latching.

I. The fault memory shall be reset by pushing a test/reset button located at the front plate, provided that the ground leakage current is 25% below the alarm set-point value.

J. Ground leakage current shall be indicated on the LED bar graph indicator and the external meter in percent related to the alarm set-point value.

K. Connection to the external current transformer shall be continuously monitored. An open circuit within the current transformer shall be indicated by flashing alarm LED and alarm relay. The function of the current transformer and measuring circuit as well as the alarm LED and the alarm relay shall be checked by pushing the test button.

L. Monitor shall individually monitor each feeder circuit leaving the panel in lieu of the incoming main. Alarm relay shall be connected to shunt trip of associated circuit breaker.

PART 3 - EXECUTION

3.01 MAIN DISTRIBUTION PANEL

A. Conductors between the monitor and point of attachment shall be kept short and straight.

END OF SECTION

SECTION 16750

ENCLOSED CIRCUIT BREAKERS

PART 1 - GENERAL

1.01 SUMMARY

A. This section includes the following individually mounted circuit breakers:

1. Molded-case circuit breakers.

2. Enclosures

1.02 SUBMITTALS

A. Product Data: For each type of enclosed circuit breaker, accessory, and component indicated.

B. Shop drawings: Diagram power, signal, and control wiring.

C. Field quality-control test reports

D. Operation and maintenance data.

1.03 QUALITY ASSURANCE

A. Electrical components, devices, and accessories listed and labeled as defined by a testing agency acceptable to Authorities Having Jurisdiction, and marked for intended use

PART 2 - PRODUCTS

2.01 MANUFACTURERS

A. In other Part 2 articles where titles below introduce lists, the following requirements apply to product selection:

1. Available manufacturers: Subject to compliance with requirements, manufacturers offering products that may be incorporated into the work include, but are not limited to, manufacturers specified.

2. Manufacturers: Subject to compliance with requirements, provide products by one of the manufacturers specified.

2.02 MOLDED-CASE CIRCUIT BREAKERS AND SWITCHES

A. Manufacturers

1. Eaton Corporation; Cutler-Hammer Products.

2. General Electric Co.; Electrical Distribution & Control Division

3. Moeller Electric Corporation

4. Siemens Energy & Automation, Inc.

5. Square D/Group Schneider

B. Molded-Case circuit breaker: 65 KAIC Interrupting Capacity.

1. Thermal-magnetic circuit breakers: Inverse time-current element for low-level overloads and instantaneous magnetic trip element for short circuits. Adjustable magnetic trip setting for circuit-breaker frame sizes 250 A and larger.

2. Adjustable instantaneous-trip circuit breakers: Magnetic trip element with front-mounted, field-adjustable trip setting.

3. Current-limiting circuit breakers: Frame sizes 400 A and smaller and let-through ratings less than NEMA FU 1, RK-5.

C. Molded-case circuit-breakers features and accessories:

1. Standard frame sizes, trip ratings, and number of poles.

2. Lugs: Mechanical style with compression lug kits suitable for number, size, trip ratings, and conductor material.

2.03 ENCLOSURES

1. Enclosure shall be weather resistant, NEMA 3R.

PART 3 - EXECUTION

3.01 INSTALLATION

A. Mount individual circuit breakers with tops at uniform height, unless otherwise indicated.

B. Comply with mounting and anchoring requirements specified by manufacturer.

C. Temporary lifting provisions: Remove temporary lifting eyes, channels, and brackets and temporary blocking of moving parts from enclosures and components.

D. Identify field-installed conductors, interconnecting wiring, and components; provide warning signs as required.

3.02 FIELD QUALITY CONTROL

A. Inspect mechanical and electrical connections.

END OF SECTION

Revision	By	Appd.	YY.MM.DD
8			
7			
6			
5			
4			
3			
2			
1			

Issued	By	Appd.	YY.MM.DD
H			
G			
F			
E			
D			
C			
B			
A			

Seal

MARTIN S. ARMENTA, P.E.
REGISTERED ENGINEER NO. 75333
STATE OF FLORIDA

Consultants

Stantec
901 Ponce de Leon Blvd. Suite 900
Coral Gables, Florida 33134
www.stantec.com

The Contractor shall verify and be responsible for all dimensions. DO NOT scale the drawing - any errors or omissions shall be reported to Stantec without delay.
The Copyrights to all designs and drawings are the property of Stantec. Reproduction or use for any purpose other than that authorized by Stantec is forbidden.

CITY OF KEY WEST

SAILFISH PIER DOCK REPLACEMENT

Key West, Florida

File Name:	RM	NJ	MA	15.08.11
	Dwn.	Chkd.	Dsgn.	YY.MM.DD

ELECTRICAL SPECIFICATIONS

Project No.	Scale	
215612745	NO SCALE	
Drawing No.	Sheet	Issue /Revision
E03	of 27	C/0

\\215612745\Drawing\118172E-003_specs.dwg
2021-01-19 9:56:16 AM Wednesday
ORIGINAL SHEET – ANSI D HORIZ

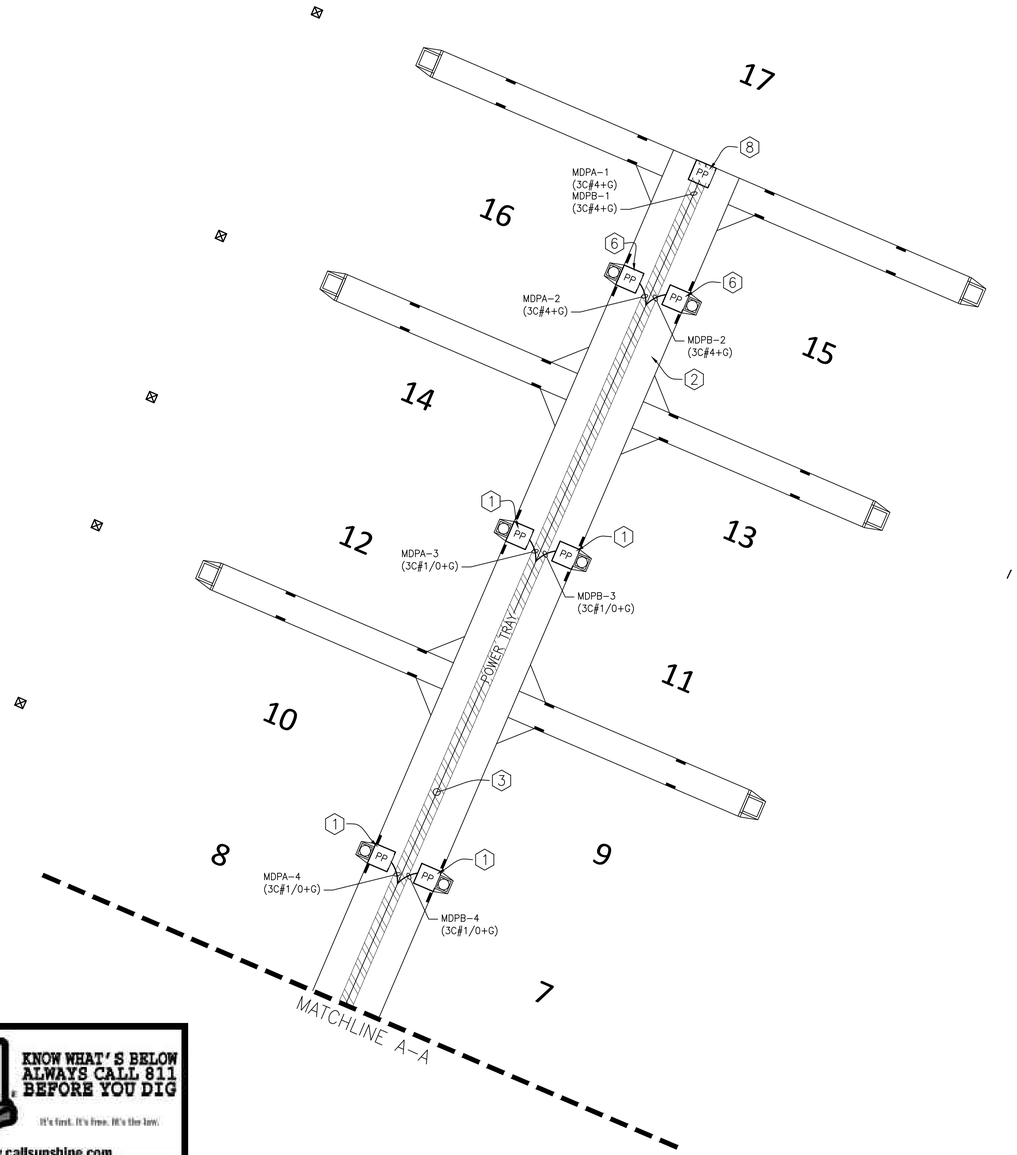

KEY NOTES (X)

1. TYPE A POWER PEDESTAL (EXISTING TO BE REUSED)
2. PROVIDE POWER CABLE TRAY UNDERSIDE OF DECK.
3. PROVIDE TYPE G-GC CABLE (3 CONDUCTOR PLUS GROUND) IN CABLE TRAY.
4. EXISTING ELECTRICAL PANELS TO REMAIN. (MDP-A; MDP-B + H)
5. EXISTING TELEPHONE, CABLE TV CABINET TO REMAIN
6. TYPE A POWER PEDESTAL (EXISTING TO BE REUSED) NOTE: ALTHOUGH THESE PEDESTAL WOULD TYPICALLY SUPPORT TWO DOCKS THEY SHALL BE CONFIGURED FOR SINGLE DOCK APPLICATION
7. TYPE B POWER PEDESTAL (NEW)
8. TYPE A POWER PEDESTAL (EXISTING TO BE REUSED) NOTE: THIS PEDESTAL TO BE MODIFIED TO SEPARATE RECEPTACLE CIRCUITS FROM MDP-A AND MDP-B AND SHALL NOT BE TIED TOGETHER AT PEDESTAL. (PROVIDE NAMEPLATE INDICATING THIS PEDESTAL IS SUPPLIED BY TWO SOURCES)
9. EXISTING VACUUM SEWER PUMP TO BE REUSED.

GENERAL NOTES

1. CONTRACTOR SHALL REUSE EXISTING CONDUCTORS WHERE POSSIBLE – NO SPLICING SHALL BE PERMITTED. CONTRACTOR SHALL VERIFY THE CONDITION AND SUITABILITY OF CABLES INTENDED FOR RE-USE.
2. REUSE EXISTING 120/240V HOUSE PANEL (LOAD CENTER) TO SUPPORT PEDESTAL LIGHTING, TEL/CATV CABINET AND VACUUM SEWER PUMP.
3. CABLE SHALL BE IN CONDUIT IN GROUND AND IN CABLE TRAY AT FLOATING DOCK. ROUTING OF CONDUIT, TRAY AND CONDUCTORS ON THIS DRAWING IS FOR INFORMATION ONLY, IT IS THE CONTRACTORS RESPONSIBILITY TO VERIFY THE BEST ROUTING TO SUIT LOCAL CONDITIONS.
4. THE POWER DISTRIBUTION LAYOUT IS DIAGRAMMATIC ONLY AND DOES NOT SHOW EVERY FITTING THAT MAY BE REQUIRED.
5. COORDINATE THIS LAYOUT WITH OTHER EQUIPMENT AND STRUCTURES BEFORE ROUGHING IN!
6. GROUNDING CONTINUITY SHALL BE MAINTAINED THROUGH THE ENTIRE RACEWAY SYSTEM.
7. SEE PEDESTAL AND MDP SCHEDULES ON DRAWINGS E07 AND E08.
8. PROVIDE PULL AND/OR JUNCTION BOXES WHERE REQUIRED BY NEC AND LOCAL CODES WHETHER OR NOT SHOWN ON DRAWINGS.
9. TWO SEPARATE CIRCUITS FED FROM PANEL H 1,2 WILL SUPPORT LIGHTING. PROVIDE 3C#10 CABLE TYPE "SOOW" FOR THIS PURPOSE.

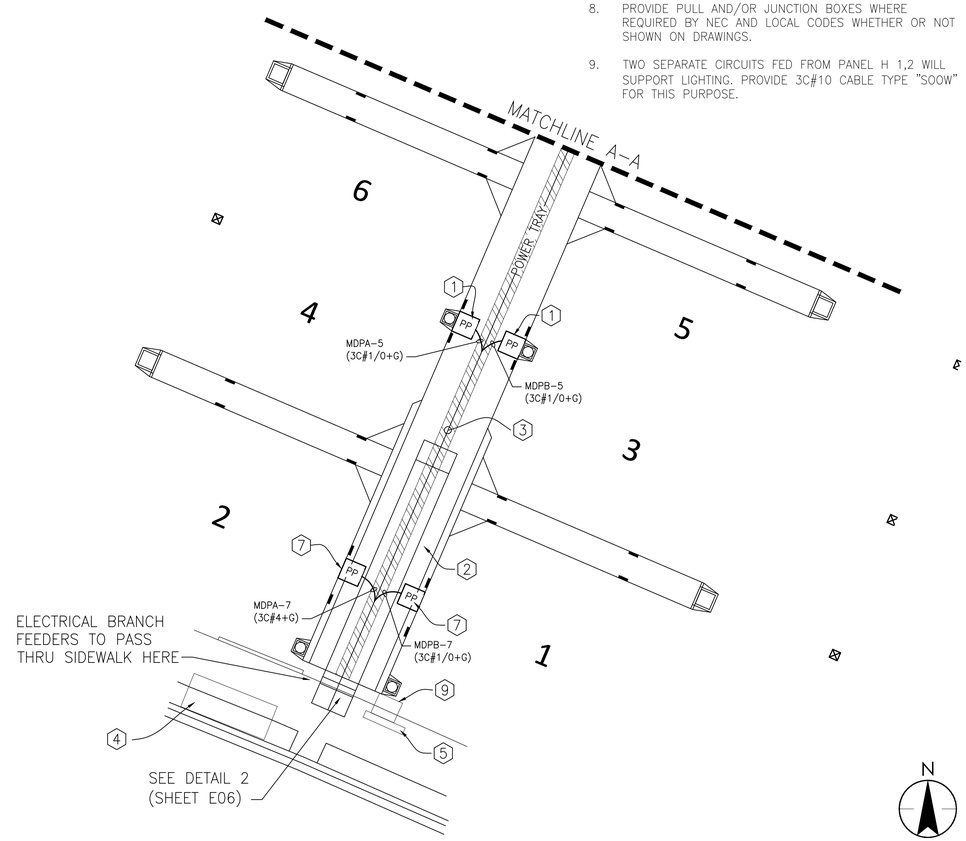

811 KNOW WHAT'S BELOW ALWAYS CALL 811 BEFORE YOU DIG
It's fast. It's free. It's the law.
www.callsunshine.com

Revision	By	Appd.	YY.MM.DD
8			
7			
6			
5			
4			
3			
2			
1			

Issued	By	Appd.	YY.MM.DD
H			
G			
F			
E			
D			
C			
B			
A			

Seal

MARTIN S. ARMENTA, P.E.
REGISTERED ENGINEER NO. 75333
STATE OF FLORIDA

Consultants

Stantec
901 Ponce de Leon Blvd. Suite 900
Coral Gables, Florida 33134
www.stantec.com

The Contractor shall verify and be responsible for all dimensions. DO NOT scale the drawing - any errors or omissions shall be reported to Stantec without delay.
The Copyrights to all designs and drawings are the property of Stantec. Reproduction or use for any purpose other than that authorized by Stantec is forbidden.

CITY OF KEY WEST
SAILFISH PIER DOCK REPLACEMENT
Key West, Florida

File Name:

RM	NJ	MA	15.08.11
Dwn.	Chkd.	Dsgn.	YY.MM.DD

ELECTRICAL SITE PLAN - POWER

Project No. 215612745
Scale 1"=10' (0' 5' 10' 15' 20')
Drawing No. E04
Sheet of 27
Issue /Revision C/0

Y:\215612745\active\215612745\electrical\Drawing\118725-101_site_power.dwg
2016/01/19 9:35 AM By: Mendoza, Rod

ORIGINAL SHEET – ANSI D HORIZ

KEY NOTES (X)

1. TEL/CATV IS INTEGRAL TO POWER PEDESTAL (EXISTING AND NEW).
2. (2) 2" CONDUITS FOR CATV AND TELEPHONE WIRING. SEE DETAIL 1 ON SHEET E06 FOR DETAILS.
3. EXISTING COMBINATION TEL/CATV CABINET TO BE REUSED. RECONNECT EXISTING AND ESTABLISH NEW CONNECTIONS AS NEEDED REFER TO PANEL H SCHEDULE ON SHEET E08 FOR ADDITIONAL INFORMATION.
4. 4-PAIRS 20 GAUGE JELL FILLED CABLES RUNNING IN SCH 40 CONDUIT. THIS CABLE SHALL BE APPROVED FOR WET LOCATION AND MARINE AMBIENT.
5. VIDEO RG-II JEL FILLED CABLE RUNNING IN SCH 40 CONDUIT APPROVED FOR WET LOCATION AND SUITABLE FOR MARINE AMBIENT SHALL BE USED AS BACKBONE CABLE. VIDEO RG-6U OF SIMILAR SPEC SHALL BE USED FOR EACH T-OFF.

GENERAL NOTES

1. CONTRACTOR SHALL REUSE EXISTING CABLES WHERE POSSIBLE- NO SPLICING SHALL BE PERMITTED. CONTRACTOR SHALL VERIFY THE CONDITION AND SUITABILITY OF CABLES INTENDED FOR REUSE.
2. THIS TEL/CATV DISTRIBUTION LAYOUT IS DIAGRAMMATIC ONLY. DOES NOT SHOW EVERY FITTING THAT MAY BE REQUIRED.
3. COORDINATE THIS LAYOUT WITH OTHER EQUIPMENT AND STRUCTURES PRIOR TO CONSTRUCTION.
4. GROUNDING CONTINUITY SHALL BE MAINTAINED THROUGH THE ENTIRE RACEWAY SYSTEM.
5. ALL PVC JOINTS SHALL BE STAGGERED AT LEAST 6 INCHES PROVIDE EXPANSION FITTINGS AS NEEDED.

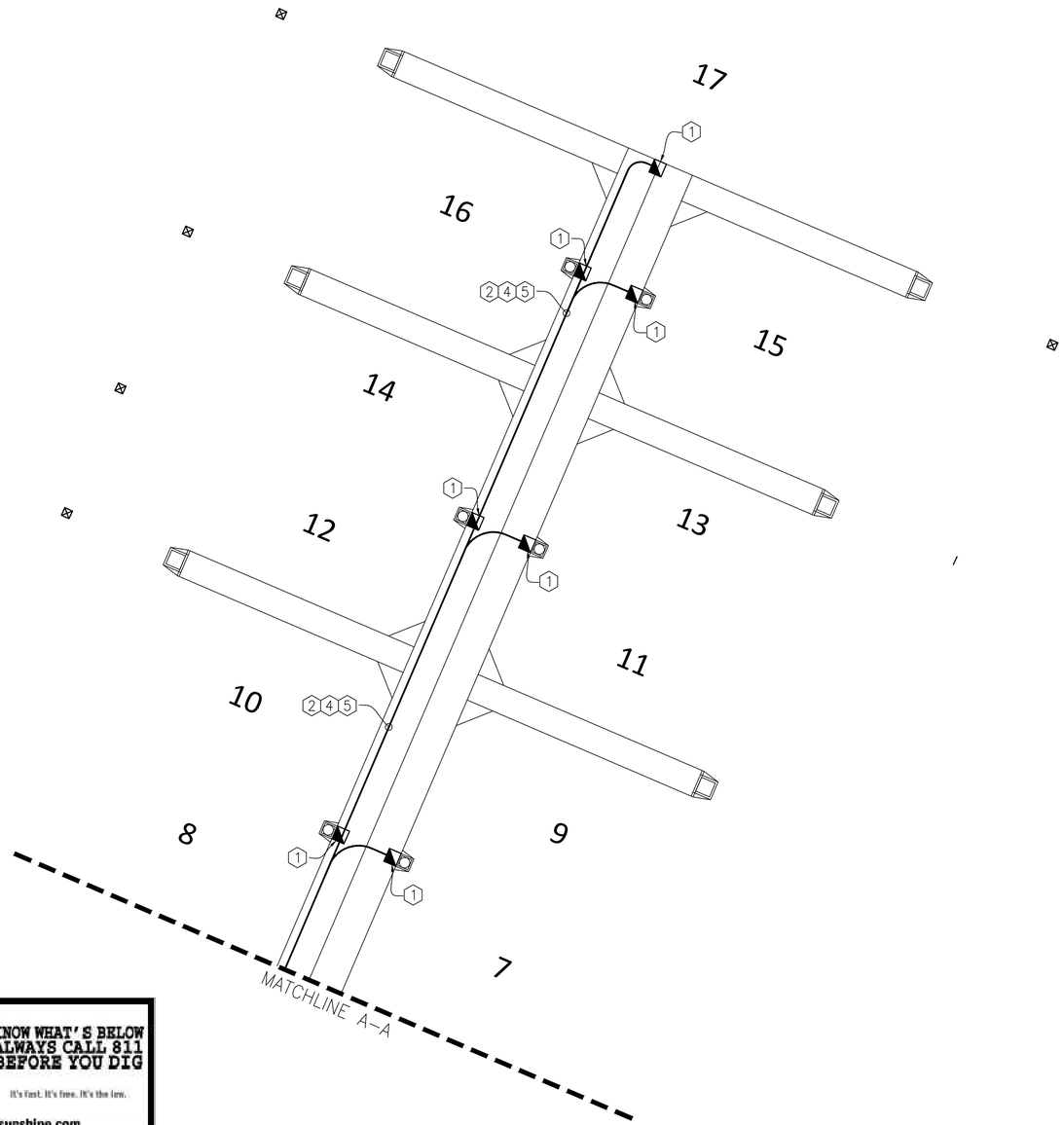

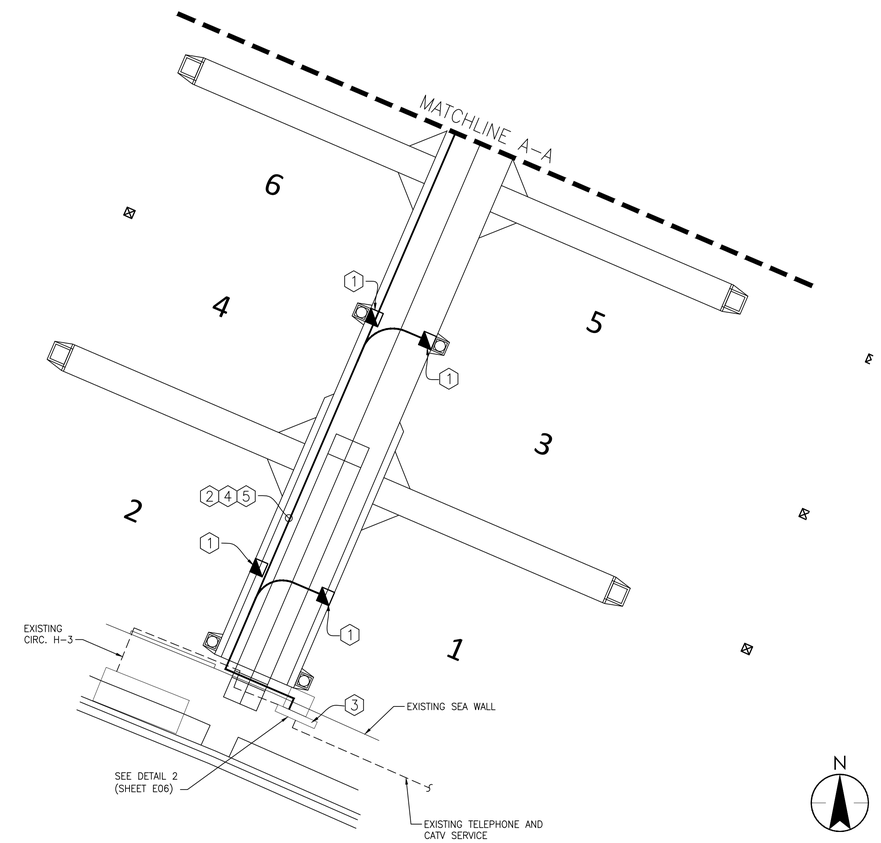

811 KNOW WHAT'S BELOW ALWAYS CALL 811 BEFORE YOU DIG
It's fast. It's free. It's the law.
www.callsunshine.com

Revision	By	Appd.	YY.MM.DD
8			
7			
6			
5			
4			
3			
2			
1			

Issued	By	Appd.	YY.MM.DD
H			
G			
F			
E			
D			
C			
B			
A			

Seal

MARTIN S. ARMENTA, P.E.
REGISTERED ENGINEER NO. 75333
STATE OF FLORIDA

Consultants

Stantec
901 Ponce de Leon Blvd. Suite 900
Coral Gables, Florida 33134
www.stantec.com

The Contractor shall verify and be responsible for all dimensions. DO NOT scale the drawing - any errors or omissions shall be reported to Stantec without delay.
The Copyrights to all designs and drawings are the property of Stantec. Reproduction or use for any purpose other than that authorized by Stantec is forbidden.

CITY OF KEY WEST
SAILFISH PIER DOCK REPLACEMENT
Key West, Florida

File Name:

RM	NJ	MA	15.08.11
Dwn.	Chkd.	Dsgn.	YY.MM.DD

CATV & TELEPHONE- SITE PLAN

Project No. 215612745
Scale 1"=10' (0' 5' 10' 15' 20')
Drawing No. E05
Sheet of 27
Issue /Revision C/0

I:\215612745\active\27545\27545\electrical\drawing\11872E-102_site_catv.dwg
2016/01/19 9:35 AM By: Morales, Rod

ORIGINAL SHEET - ANSI D HORIZ

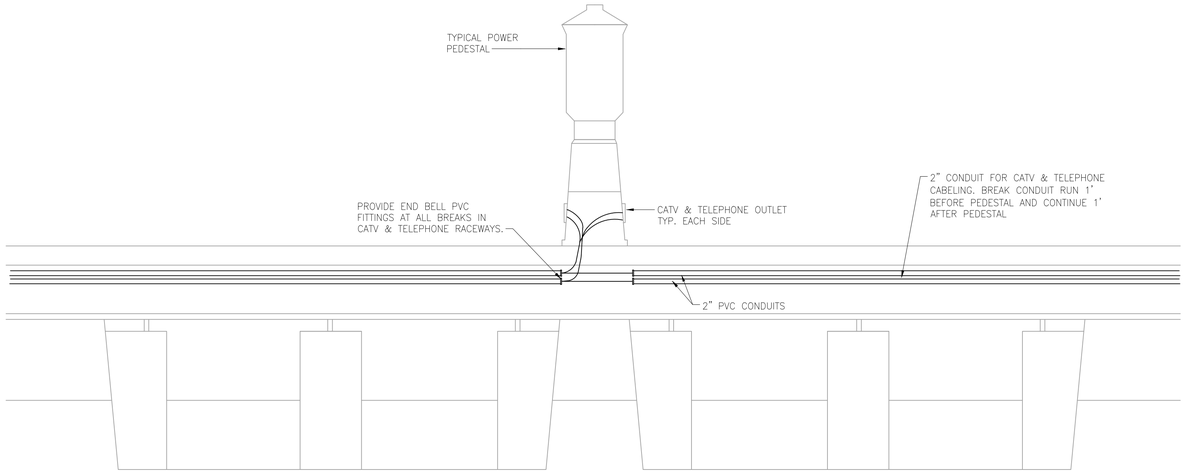

DETAIL 1

CATV & TELEPHONE SERVICE DETAIL

N.T.S.

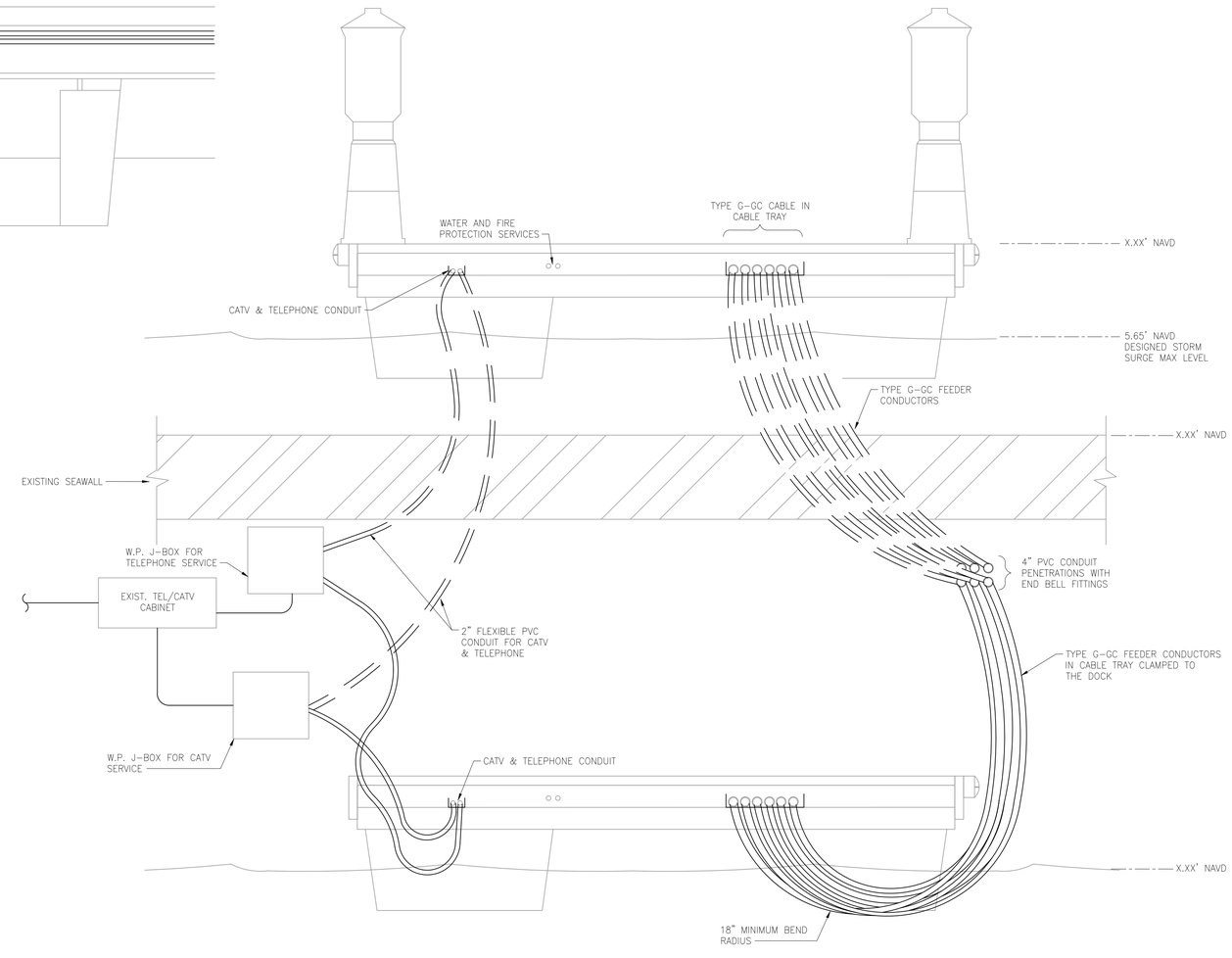

DETAIL 2

FLEXIBLE ELECTRICAL SERVICE CONNECTION DETAIL

N.T.S.

Revision	By	Appd.	YY.MM.DD
8			
7			
6			
5			
4			
3			
2			
1			

Issued	By	Appd.	YY.MM.DD
H			
G			
F			
E			
D			
C			
A			

Seal

MARTIN S. ARMENTA, P.E.
REGISTERED ENGINEER NO. 75333
STATE OF FLORIDA

Consultants

Stantec
901 Ponce de Leon Blvd. Suite 900
Coral Gables, Florida 33134
www.stantec.com

The Contractor shall verify and be responsible for all dimensions. DO NOT scale the drawing - any errors or omissions shall be reported to Stantec without delay.
The Copyrights to all designs and drawings are the property of Stantec. Reproduction or use for any purpose other than that authorized by Stantec is forbidden.

CITY OF KEY WEST
SAILFISH PIER DOCK REPLACEMENT
Key West, Florida

File Name:

Dwn.	Chkd.	Dsgn.	YY.MM.DD
RM	NJ	MA	15.08.11

ELECTRICAL DETAILS

Project No.	Scale	
215612745	NO SCALE	
Drawing No.	Sheet	Issue /Revision
E06	of 27	C/0

Y:\215612745\active\215612745\electrical\drawing\11872e-501_dtls.dwg
2016/01/19 9:37 AM By: Menzies, Rod
ORIGINAL SHEET - ANSI D HORIZ

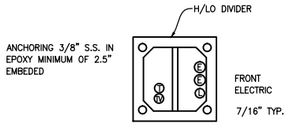

LEGEND
- (E) POWER: 3C#1/0 CABLE TYPE "G"
- (L) LIGHTING: 3C#10 CABLE TYPE "SOOW"
- (T) TELEPHONE
- (TV) CATV

NOTES:
FRONT OF PEDESTAL FACES MIDDLE OF PIER. ALL ELECTRIC TO BE TURNED UP IN THE 2.5x6" OPENING FORWARD OF THE HI/LO DIVIDER. TELE/CATV TO BE TURNED UP IN THE BACK SIDE OF THE HI/LO DIVIDER.

NOTE:
PEDESTAL A1 SUPPLIED BY TWO SOURCES. PROVIDE NAMEPLATE INDICATING THIS PEDESTAL SUPPLIED BY TWO SOURCES: MDPA + MDPB

PEDESTAL "A1" BASE DETAIL (EXISTING) (MODIFIED TYPE A)
N.T.S.

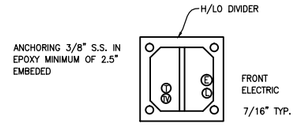

LEGEND
- (E) POWER: 3C#1/0 CABLE TYPE "G"
- (L) LIGHTING: 3C#10 CABLE TYPE "SOOW"
- (T) TELEPHONE
- (TV) CATV

NOTES:
FRONT OF PEDESTAL FACES MIDDLE OF PIER. ALL ELECTRIC TO BE TURNED UP IN THE 2.5x6" OPENING FORWARD OF THE HI/LO DIVIDER. TELE/CATV TO BE TURNED UP IN THE BACK SIDE OF THE HI/LO DIVIDER.

PEDESTAL "A" BASE DETAIL (EXISTING)
N.T.S.

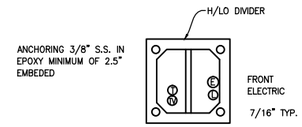

LEGEND
- (E) POWER: 3C#4 CABLE TYPE "G"
- (L) LIGHTING: 3C#10 CABLE TYPE "SOOW"
- (T) TELEPHONE
- (TV) CATV

NOTES:
FRONT OF PEDESTAL FACES MIDDLE OF PIER. ALL ELECTRIC TO BE TURNED UP IN THE 2.5x6" OPENING FORWARD OF THE HI/LO DIVIDER. TELE/CATV TO BE TURNED UP IN THE BACK SIDE OF THE HI/LO DIVIDER.

PEDESTAL "B" BASE DETAIL (NEW)
N.T.S.

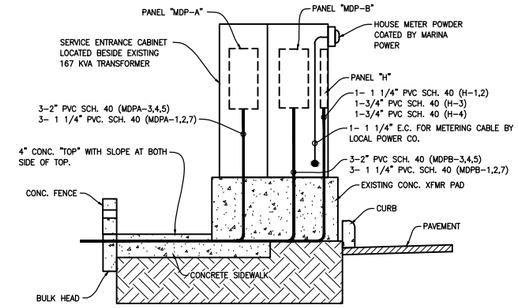

VERIFY THAT MULTIPLE CABLES IN CONDUIT MEET NEC FILL REQUIREMENTS

EXISTING SERVICE ENTRANCE EQUIPMENT ELEVATION
N.T.S.

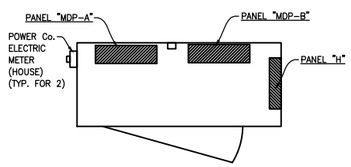

EXISTING POWER SERVICE ENTRANCE CABINET DETAIL
N.T.S.

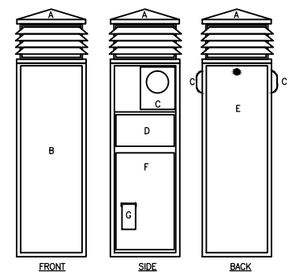

A. FOUR TIER LOUVERED LIGHT TOP WITH (2) PL9 FLOURSCENT LAMPS.
B. FRONT ACCESS COVER TO ELECTRIC.
C. UTILITY METER.
D. RECEPTACLE COMPARTMENT.
E. BACK ACCESS COVER
F. REMOVABLE ACCESS COVER
G. TEL/CATV DOOR.

PEDESTAL DETAIL
N.T.S.

KEY NOTES
1. EXISTING TYPE "A" PEDESTAL TO BE MODIFIED TO TYPE "B"
2. EXISTING TYPE "A1" PEDESTAL TO BE SUPPLIED BY TWO SOURCES MDPA & MDPB.

GENERAL NOTES:
ALL UTILITY METERING WILL NEED TO BE RELOCATED SUCH THAT IN THE NEW ARRANGEMENT THE SAME METER WILL STILL BE ASSIGNED TO THE CORRECT SLIP AS IN THE EXISTING SETUP.

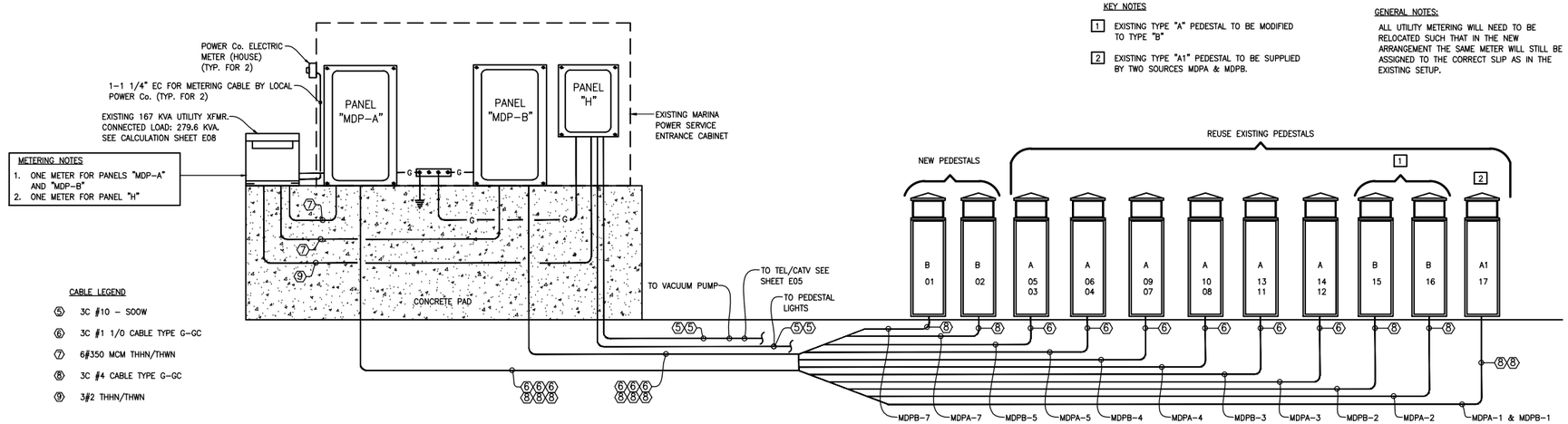

POWER RISER DIAGRAM
N.T.S.

Revision	By	Appd.	YY.MM.DD
8			
7			
6			
5			
4			
3			
2			
1			

Issued	By	Appd.	YY.MM.DD
H			
G			
F			
E			
D			
C			
B			
A			

Seal

MARTIN S. ARMENTA, P.E.
REGISTERED ENGINEER NO. 75333
STATE OF FLORIDA

Consultants

Stantec
901 Ponce de Leon Blvd. Suite 900
Coral Gables, Florida 33134
www.stantec.com

The Contractor shall verify and be responsible for all dimensions. DO NOT scale the drawing - any errors or omissions shall be reported to Stantec without delay.
The Copyrights to all designs and drawings are the property of Stantec. Reproduction or use for any purpose other than that authorized by Stantec is forbidden.

CITY OF KEY WEST
SAILFISH PIER DOCK REPLACEMENT
Key West, Florida

File Name:	RM	NJ	MA	15.08.11
	Dwn.	Chkd.	Dsgn.	YY.MM.DD

ELECTRICAL DETAILS

Project No.	Scale	
215612745	NO SCALE	
Drawing No.	Sheet	Issue /Revision
E07	of 27	C/0

I:\215612745\active\215612745\electrical\drawing\11872E-E01_sngl_line.dwg
2016/07/19 9:37 AM By: Morales, Raul

ORIGINAL SHEET - ANSI D HORIZ

LOAD CALCULATION FOR MDP-A OR MDP-B

SERVICE VOLTAGE 120/240V–1PH–3W+G
QUANTITY OF RECEPTACLES 18
DEMAND FACTOR PER NEC TABLE 555.12 70% AND 90%

CONNECTED LOAD
PEDESTAL TYPE A (3) X 48,000 VA= 144,000 VA
PEDESTAL TYPE A1 (1) X 24,000 VA= 24,000 VA
PEDESTAL TYPE B (2) X 24,000 VA= 48,000 VA

SUBTOTAL CONNECTED LOAD 216,000

DEMAND LOAD
(18) RECEPTACLES @ 63% = 216,000 VA X 63%= 136,080 VA

TOTAL LOAD
136,080 : 240V = 567 A

TOTAL SERVICE ENTRANCE LOAD
TOTAL LOAD 567A 136 KVA

TYPE: SIEMENS TYPE "P2"	EXISTING PANEL "MDP-A"	MODIFICATION: GROUND BUS
VOLTAGE: 120/240V-1PH-3W		ENCLOSURE: SURFACE-NEMA 1
MAINS: 600A. M.B. TYPE "LD6-A" W/IP:W/HGH		LOCATION: MARINA POWER Co. CABINET
A.I.C.S.: 55K		FED FROM: PAD XFMR

CIRC. No.	SERVICING	CIRCUIT BREAKER			LOAD IN VA		FEEDER SIZE	SLIP NUMBER
		POLE	TRP	TYPE	Ø A	Ø B		
1	PEDESTAL A1 SERV. 1	2	100	BLH	*	*	3C#4 CABLE TYPE "G"	17
2	PEDESTAL B	2	100	BLH	*	*	3C#4 CABLE TYPE "G"	16
3	PEDESTAL A	2	200	QJ2H	*	*	3C#1/0 CABLE TYPE "G"	12, 14
4	PEDESTAL A	2	200	QJ2H	*	1 *	3C#1/0 CABLE TYPE "G"	8, 10
5	PEDESTAL A	2	200	QJ2H	*	*	3C#1/0 CABLE TYPE "G"	4, 6
6	TVSS	2	20	BLH	*	*		
# 7	PEDESTAL B	2	100	BLH	*	*	3C#4 CABLE TYPE "G-GC"	2
8	SPACE ONLY	2	-	-	-	-	-	
		TOTAL VA :			*	*	THIS PANEL IS SUITABLE FOR SERVICE ENTRANCE AND EQUIPPED WITH INTEGRAL MAIN CIRCUIT BREAKER. THIS MAIN C/B AND BRANCH C/B ARE IN SERIES SHORT CIRCUIT CURRENT RATING.	
		TOTAL AMPS:			*	*		
SERVICE ENTRANCE FEEDER 6#350 MCM-2-3" PVC SCH 40					BRANCH: NORMAL			

NEW CIRCUIT

TYPE: SIEMENS TYPE "P2"	EXISTING PANEL "MDP-B"	MODIFICATION: GROUND BUS
VOLTAGE: 120/240V-1PH-3W		ENCLOSURE: SURFACE-NEMA 1
MAINS: 600A. M.B. TYPE "LD6-A" W/IP:W/HGH		LOCATION: MARINA POWER Co. CABINET
A.I.C.S.: 55K		FED FROM: PAD XFMR

CIRC. No.	SERVICING	CIRCUIT BREAKER			LOAD IN VA		FEEDER SIZE	SLIP NUMBER
		POLE	TRP	TYPE	Ø A	Ø B		
1	PEDESTAL A1 SERV. 2	2	100	BLH	*	*	3C#4 CABLE TYPE "G"	17
2	PEDESTAL B	2	100	BLH	*	*	3C#4 CABLE TYPE "G"	15
3	PEDESTAL A	2	200	QJ2H	*	*	3C#1/0 CABLE TYPE "G"	11, 13
4	PEDESTAL A	2	200	QJ2H	*	1 *	3C#1/0 CABLE TYPE "G"	7, 9
5	PEDESTAL A	2	200	QJ2H	*	*	3C#1/0 CABLE TYPE "G"	3, 5
6	TVSS	2	20	BLH	*	*		
# 7	PEDESTAL B	2	100	BLH	*	*	3C#4 CABLE TYPE "G-GC"	1
8	SPACE ONLY	2	-	-	-	-	-	
		TOTAL VA :					THIS PANEL IS SUITABLE FOR SERVICE ENTRANCE AND EQUIPPED WITH INTEGRAL MAIN CIRCUIT BREAKER. THIS MAIN C/B AND BRANCH C/B ARE IN SERIES SHORT CIRCUIT CURRENT RATING.	
		TOTAL AMPS:						
SERVICE ENTRANCE FEEDER 6#350 MCM THHN/THWN IN 2-3" PVC SCH. 40					BRANCH: NORMAL			

NEW CIRCUIT

TYPE: SIEMENS TYPE LOAD CENTER	EXISTING PANEL "H"	MODIFICATION: GROUND BUS
VOLTAGE: 120/240V-1PH-3W		ENCLOSURE: SURFACE-NEMA 1
MAINS: 100A. M.B. TYPE "QJ2H"		LOCATION: MARINA POWER Co. CABINET
A.I.C.S.: 25K		FED FROM: PAD TRANSFORMER

CIRC. No.	SERVICING	CIRCUIT BREAKER			LOAD IN VA		FEEDER SIZE
		POLE	TRP	TYPE	Ø A	Ø B	
1	PEDESTAL LTG.	1	20	QP	1100	-	3C#10 CABLE TYPE "SOOW"
2	PEDESTAL LTG.	1	20	QP	-	1166	3C#10 CABLE TYPE "SOOW"
3	TEL/CATV SYSTEM	1	20	QP	1500	-	3C#10 CABLE TYPE "SOOW"
4	VACUUM SEWER PUMP	2	20	QP	1920	1920	3C#10 CABLE TYPE "SOOW"
5	SPACE	1	20	QP	-	1500	-
6	SPACE ONLY	1	-	-	-	-	-
7	SPACE ONLY	1	-	-	-	-	-
8	SPACE ONLY	1	-	-	-	-	-
		TOTAL VA :			4520	3086	THIS PANEL IS SUITABLE FOR SERVICE ENTRANCE AND EQUIPPED WITH INTEGRAL MAIN CIRCUIT BREAKER. THIS MAIN C/B AND BRANCH C/B ARE IN SERIES SHORT CIRCUIT CURRENT RATING.
		AMPS:			18.8	12.9	
		TOTAL AMPS:			31.7		
SERVICE ENTRANCE FEEDER: 3#2 THHN/THWN IN 1 1/4" PVC SCH. 40					BRANCH: NORMAL		

KEY NOTE:

1 SEE LOAD CALCULATION FOR MDP–A OR MDP–B ON THIS SHEET (E08)

PEDESTAL WIRING SCHEDULE

PEDESTAL TYPE	WIRING SIZE FROM RESPECTIVE POWER SCHEDULE	CABLE NUMBER	SERVICE VOLTAGE	CONNECTED LOAD IN KVA	PEDESTAL OUTLET QTY.	POWER OUTLET SIZE	MARINA POWER CATALOG No.	QUANTITY
A	3C#1/0 CABLE TYPE "G"	6	120/240V-1PH-3W+G	48	4	50/50/50/50	PCMFS-12-DD-DD-L-2TTV-2W-DD-DD-2M2(UTILITY)-RLF-TPL	6
A1	3C#4 CABLE TYPE "G" 3C#4 CABLE TYPE "G"	8 8	120/240V-1PH-3W+G 120/240V-1PH-3W+G	24 24	2 2	50/50 50/50	PCMFS-12-DD-DD-L-2TTV-DD-DD-2M2(UTILITY)-RLF-TPL PCMFS-12-DD-DD-L-2TTV-DD-DD-2M2(UTILITY)-RLF-TPL	1 1
B	3C#4 CABLE TYPE "G"	8	120/240V-1PH-3W+G	24	2	50/50	PCMFS-12-DD-DD-L-2TTV-DD-DD-2M2(UTILITY)-RLF-TPL	4

NOTE: ALL PEDESTALS SHALL BE RATED AT 10KA.(A.S.C.).EXCEPT AS SHOWN ON FLOOR PLAN

NOTE: ALL INDIVIDUAL BRANCH CIRCUIT CONDUCTORS (ALL PHASE, NEUTRAL AND GROUNDING EQUIPMENT CABLES) SERVING PEDESTAL FROM PANEL "MDP" SHALL BE GROUPED TOGETHER (STRAPPED), TO REDUCE INDUCTIVE HEATING OF FERROUS METALLIC ENCLOSURE, TO AVOID INCREASES IN OVERALL CIRCUIT IMPEDANCE AND TO MAINTAIN AN EFFECTIVE GROUND-FAULT CURRENT PATH.

POWER DISTRIBUTION VOLT DROP SCHEDULE

CIRC. No. OR PANEL	SERVICING	VOLTAGE	PH	POWER FACTOR	LOAD IN AMPS.	AMBIENT TEMP(°C)	WIRE OP TEMP(°C)	FEEDER				VOLT DROP IN %
								*LENGTH IN FT.	SIZE	NUMBER	QTY. PER PH.	
"MDP-A" OR "MDP-B"	1/2 MARINA EACH	120/240	1	0.85	567	30	75	10	6#350 MCM-THHN/THWN	7	2	0.13
MDPA-1	1-PEDESTAL A1	120/240	1	0.85	90	30	75	250	3C#4 CABLE TYPE "G-GC"	8	1	5.18
MDPA-2	1-PEDESTAL B	120/240	1	0.85	90	30	75	210	3C#1/0 TYPE G	8	1	3.44
MDPA-3	1-PEDESTAL A	120/240	1	0.85	180	30	75	170	3C#1/0 TYPE G	6	1	2.78
MDPA-4	1-PEDESTAL A	120/240	1	0.85	180	30	75	115	3C#1/0 TYPE G	6	1	1.88
MDPA-5	1-PEDESTAL A	120/240	1	0.85	180	30	75	72	3C#1/0 TYPE G	6	1	1.17
MDPB-1	1-PEDESTAL A1	120/240	1	0.85	90	30	75	250	3C#4 CABLE TYPE "G-GC"	8	1	5.18
MDPB-2	1-PEDESTAL B	120/240	1	0.85	90	30	75	215	3C#1/0 TYPE G	8	1	3.52
MDPB-3	1-PEDESTAL A	120/240	1	0.85	180	30	75	175	3C#1/0 TYPE G	6	1	2.87
MDPB-4	1-PEDESTAL A	120/240	1	0.85	180	30	75	121	3C#1/0 TYPE G	6	1	1.98
MDPB-5	1-PEDESTAL A	120/240	1	0.85	180	30	75	80	3C#1/0 TYPE G	6	1	1.31
PANEL "H"	LTG/REC/PUMP	120/240	1	0.85	31.7	30	75	10	3#2-1 1/4" PVC-THHN/THWN	9	1	0.08
MDPA-7	1-PEDESTAL B	120/240	1	0.85	90	30	75	40	3C#4 CABLE TYPE "G-GC"	8	1	0.83
MDPB-7	1-PEDESTAL B	120/240	1	0.85	90	30	75	45	3C#4 CABLE TYPE "G-GC"	8	1	0.93

NOTES: ALL WIRING BASED ON COPPER CONDUCTORS WITH THHN/THWN INSULATION AT 90°C, WITH 75°C TERMINATION RATING ON SINGLE OR THREE PHASE CIRCUIT. (*)FEEDER LENGTH HERE IN ARE FOR VOLTAGE DROP CALCULATION ONLY. THE REAL LENGTH SHALL BE MEASURED ON FIELD.

Revision	By	Appd.	YY.MM.DD
8			
7			
6			
5			
4			
3			
2			
1			

Issued	By	Appd.	YY.MM.DD
H			
G			
F			
E			
D			
C			
B			
A			

Seal

MARTIN S. ARMENTA, P.E.
REGISTERED ENGINEER NO. 75333
STATE OF FLORIDA

Consultants

Stantec
901 Ponce de Leon Blvd. Suite 900
Coral Gables, Florida 33134
www.stantec.com

The Contractor shall verify and be responsible for all dimensions. DO NOT scale the drawing - any errors or omissions shall be reported to Stantec without delay.
The Copyrights to all designs and drawings are the property of Stantec. Reproduction or use for any purpose other than that authorized by Stantec is forbidden.

CITY OF KEY WEST
SAILFISH PIER DOCK REPLACEMENT
Key West, Florida

File Name:	RM	NJ	MA	15.08.11
	Dwn.	Chkd.	Dsgn.	YY.MM.DD

ELECTRICAL LEGENDS

Project No.	Scale	
215612745	NO SCALE	
Drawing No.	Sheet	
E08	of 27	C/0

V:\215612745\active\215612745\electrical\drawing\11872E-E01_sngl_line.dwg
2016/07/19 9:37 AM By: Morales, Reg

ORIGINAL SHEET – ANSI D HORIZ

N

Scale: 1" = 100'
(Reduced Scale: 1" = 200')

0 50 100 200

NOTE:

EXISTING FIRE PUMP HOUSE INCLUDES ONE PATTERSON PUMP CO. VERTICAL IN-LINE PUMP MODEL 5x3 500 gpm @ 162 Ft.TH (70 psi) WITH 30 hp MOTOR rpm.

NOTE: ALL DEPTHS REFERENCE MEAN LOW WATER PER DEP TIDE STATION 872-4542. MEAN HIGH WATER EL. -0.23' NAVD88; MEAN LOW @ -1.24' NAVD88.

Revision	By	Appd.	YY.MM.DD

Issued	By	Appd.	YY.MM.DD
C			
B			
A			

Seal

ED DVORAK, P.E.
REGISTERED ENGINEER NO. 40961
STATE OF FLORIDA

Consultants

Stantec
901 Ponce de Leon Blvd. Suite 900
Coral Gables, Florida 33134
www.stantec.com

The Contractor shall verify and be responsible for all dimensions. DO NOT scale the drawing - any errors or omissions shall be reported to Stantec without delay.
The Copyrights to all designs and drawings are the property of Stantec. Reproduction or use for any purpose other than that authorized by Stantec is forbidden.

CITY OF KEY WEST
SAILFISH PIER DOCK REPLACEMENT
Key West, Florida

File Name:	PKM	JFT	PKM	15.08.12
	Dwn.	Chkd.	Dsgn.	YY.MM.DD

FIRE PROTECTION SITE PLAN

Project No.	Scale	
215612745		
Drawing No.	Sheet	Issue /Revision
FP-01	of 27	

V:\2156\active\215612745\mechanical\drawing\118726P-01_Site Plan.dwg
2016/07/19 9:37 AM By: Morales, Reb

ORIGINAL SHEET - ANSI D HORIZ

FIRE HYDRANT FLOW TEST SUMMARY

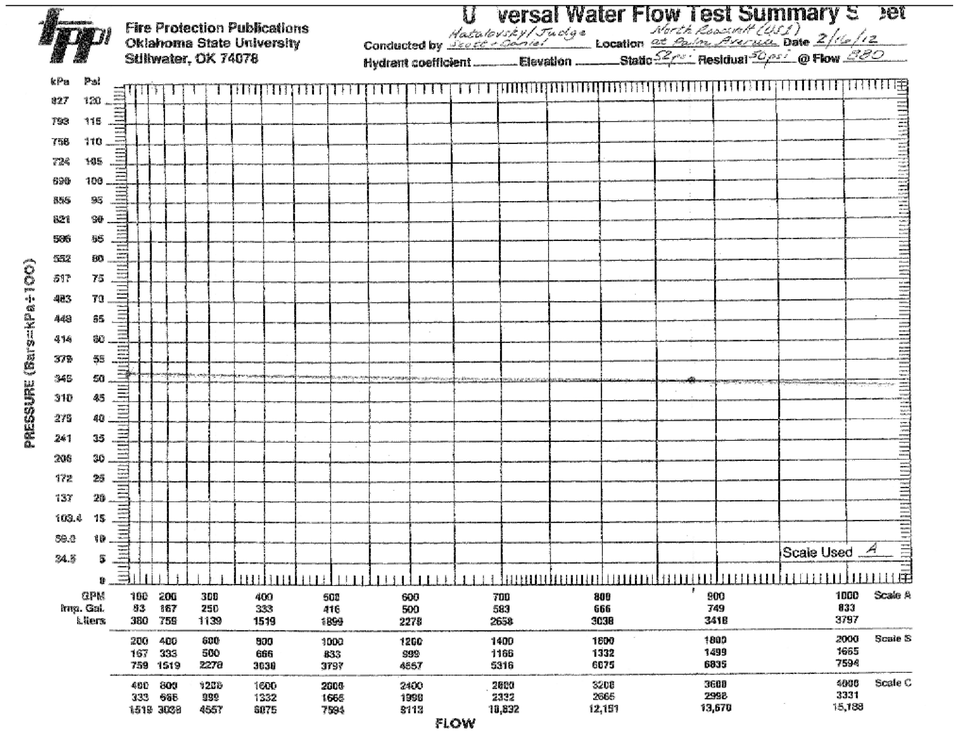

DRAWING SYMBOLS

1 / FP03	PLAN OR DIAGRAM DESIGNATION / DRAWING NUMBER WHERE DRAWN
A / FP04	SECTION DESIGNATION / DRAWING NUMBER WHERE DRAWN
—FW—	FIRE WATER PIPE
—PW—	POTABLE WATER PIPE
— — —	POTABLE WATER PIPE
—SW—	SANITARY VACUUM PIPE
—o	PIPE TURN UP
—ɔ	PIPE TURN DOWN
—ɔ—	RISE OR DROP IN PIPE
—|	SIDE CONNECTION
—o—	BOTTOM CONNECTION
—u—	TOP CONNECTION
—o—	CROSS BOTTOM CONNECTION
—▷|	CHECK VALVE
—⊠—	BALL VALVE
—||CO	SEWER CLEANOUT
N	PLAN NORTH
1"=10' 0' 5' 10' 15' 20'	GRAPHIC SCALE
X	KEYED NOTE
X	REVISION NUMBER
	CONNECT TO EXISTING
W	POTABLE WATER AND SANITARY SEWER DOCK BOX
FEC	FIRE EXTINGUISHER CABINET
FHC	FIRE HOSE CABINET
P	ELECTRICAL POWER PEDESTAL
EDP	ELECTRICAL DISTRIBUTION PANEL
EX	EXISTING
HB	HOSE BIBB

FIRE PROTECTION DESIGN

SAILFISH PIER, GARRISON BIGHT MARINA KEY WEST, FL

A. GIVEN: CITY WATER PRESSURE IS 53 psi

B. FIRE PUMP DELIVERS ≃ 100 gpm @ 81 psi TH [booster PS]
ADD PRESSURES 53+81= 134 psi AVAILABLE

C. SYSTEM HEAD LOSSES:

1. *500 FT 4" PIPE* = 1.05 psi
   [h_f = 0.21 psi/100
2. *210 FT (PIER) 3" PIPE* =1.58 psi
   [h_f = 0.73 psi/100
3. *100 FT 1.5" HOSE* =25 psi
4. *BRASS NOZZLE* =2 psi
5. *ACCESSORIES* =2 psi

TOTAL HEADLOSS =31.6 psi

D. SUMMATION
134psi − 32 psi = 102psi > 100psi

Revision	By	Appd.	YY.MM.DD

Issued	By	Appd.	YY.MM.DD
C			
B			
A			

Seal

ED DVORAK, P.E.
REGISTERED ENGINEER NO. 40961
STATE OF FLORIDA

Consultants

Stantec
901 Ponce de Leon Blvd. Suite 900
Coral Gables, Florida 33134
www.stantec.com

The Contractor shall verify and be responsible for all dimensions. DO NOT scale the drawing - any errors or omissions shall be reported to Stantec without delay.
The Copyrights to all designs and drawings are the property of Stantec. Reproduction or use for any purpose other than that authorized by Stantec is forbidden.

CITY OF KEY WEST
SAILFISH PIER DOCK REPLACEMENT
Key West, Florida

File Name:

PKM	JFT	PKM	15.08.12
Dwn.	Chkd.	Dsgn.	YY.MM.DD

FIRE PROTECTION LEGEND

Project No. 215612745
Scale NTS
Drawing No. FP-02
Sheet of 27
Issue /Revision

V:\215612745\active\215612745\mechanical\drawing\11872FP-01_lgnd.dwg
2012/07/12 9:37 AM By: Morales, Raul
ORIGINAL SHEET – ANSI D HORIZ

FIRE EXTINGUISHMENT SYSTEMS SPECIFICATIONS

PART 1 - GENERAL REQUIREMENTS

1.1 SYSTEM DESCRIPTION

A. Sailfish Pier fire extinguishment systems shall consist of a fixed-in-place, automatic, Class I wet standpipe relying upon an existing fire pump to supply the water demand and shall include Class II hose stations and portable type ABC fire extinguishers.

B. System design shall be based upon a flow rate for the hydraulically most remote hose nozzle of 100 GPM and a minimum design pressure of 65 PSI. Fire water source is from a public waterworks system. Flow and pressure test data are as follows: Date of test: 16 Feb. 2012 Performed by: Fire Dept

Static Pressure: 52 psi Residual Pressure: 50 psi Flow: 880 gpm

1.2 SUMMARY OF WORK

A. New construction work shall include but is not limited to providing complete new fire extinguishment piping systems and portable fire extinguishers with cabinets as described in these specifications and drawings for the proposed pier. Work shall include preparing minor modifications to the existing fire water supply main at the proposed pier and seawall interface.

B. Bids shall include as a minimum all labor, tools, materials, plant, transportation, taxes, related items, etc., essential for demolishing existing work and furnishing, installing, operating, and testing of the proposed new work.

1.3 EXAMINATION OF DOCUMENTS

A. The intent of the drawings and specifications is to establish type and quality of materials and a general layout and location of the major components that comprise the fire extinguishment systems. They are not intended to show in minute detail every or all accessories intended for the purposes of executing the work, but it is understood that such details are part of the project scope.

B. Where conflicts exist between drawings and specifications the most stringent requirements shall apply.

1.4 CODES AND STANDARDS

A. Furnish and install fire extinguishment systems to meet all current requirements of national, state and municipal codes, rules, regulations, laws, and standards as they are adopted by the governing agency and as they may apply.

NFPA 10 Standard for Portable Fire Extinguishers 2007 Edition

NFPA 14 Standards for the Installation of Standpipe and Hose Systems 2007 Edition

NFPA 303 Fire Protection Standards for Marinas and Boatyards 2006 Edition

Florida Fire Prevention Code 2010 Edition

Florida Building Code 2010 Edition

Factory Mutual

Underwriters Laboratories

1.5 PERMITS AND INSPECTIONS

A. Secure and pay for all permits and licenses before actual work is started and observe all requirements stipulated thereon.

B. Coordinate with and give all necessary notices to the Authority Having Jurisdiction for inspection and testing of the fire extinguishment systems required to be witnessed by their agent.

1.6 SHOP DRAWING SUBMITTALS AND PRE-INSTALLATION COORDINATION

A. Prior to ordering materials submit shop drawings including manufacturer's catalog cuts, brochures and performance data of pipe and fitting materials, hoses, valves, supports, pipe markers, fire extinguishers, cabinets, and other appurtenances as may be required. Unless specified elsewhere, provide a minimum of six copies for Engineer and Owner review.

B. After owner acceptance of shop drawings, submit the approved documents to the Authority Having Jurisdiction for their approval. Submit in quantities as directed by the Authority Having Jurisdiction.

C. Coordinate with all trades in submittal of shop drawings and for space requirements. If work is installed prior to coordination with other trades which interferes with related work, make all necessary changes to correct the condition at no additional cost to the Owner.

D. Coordinate with floating dock supplier for pipe support spacing requirements integral with structural framing.

1.7 PRODUCTS AND WORKMANSHIP

A. All equipment and materials shall be new and unused as manufactured by companies regularly engaged in the fabrication of the type specified except as otherwise noted herein. Use products of a single manufacturer for similar type equipment. Modified or re-built equipment or materials are not acceptable.

B. Provide standpipe components and piping system installation capable of sustaining 175 PSIG minimum working pressure rating.

C. Install fire extinguishment systems in a neat and workmanlike manner utilizing personnel licensed and skilled in the trades.

1.8 WARRANTY

A. Provide an unconditional warranty from failure and/or defects on all products and workmanship provided for this project for a minimum of one (1) year from date of substantial completion except as noted herein.

B. Provide six (6) year product warranty for fire extinguishers.

C. Warranty for products removed and reinstalled as indicated on the plans shall be provided for installation workmanship and new components as may be provided.

1.9 DELIVERY AND STORAGE

A. Handle, store and protect equipment and materials in accordance with the manufacturer's recommendations. Replace damaged or defective items with new items.

1.10 DEMOLITION, CUTTING AND PATCHING

A. Protect all existing active services against damage including water, electric, sewer, etc., in areas of proposed construction. If active services are encountered that require relocation, make request to Owner for determination of procedures.

B. Remove and dispose of properly off-site, all abandoned fire extinguishment piping, valves, pipe supports, equipment, etc., rendered obsolete by work of this project.

C. Provide all necessary cutting and patching required in connection with fire extinguishment work. Coordinate with and obtain written approval from the Marine Contractor for all proposed cutting and patching prior to commencement of work.

1.11 CLEANING

A. Clear away all debris, surplus materials, etc., resulting from fire extinguishment system installation work and operations. Leave the job and equipment provided under contract in a clean and first-class condition.

1.12 TEST AND DEMONSTRATIONS

A. Perform tests of the fire extinguishment systems as specified herein. Repeat as required until proven acceptable to the Engineer, Owner and Authority Having Jurisdiction. Provide all gauges, tools, pumps, gas, air or other required equipment or materials.

B. Upon completion of testing, demonstrate maintenance, operation and adjustment procedures to owner for all installed systems and equipment.

1.13 RECORD DOCUMENTS

A. Maintain at the job site one set of prints on which are recorded all field changes and other portions of the fire extinguishment system work that vary from the contract documents. Indicate actual pipe system routing and installed accessories and devices.

B. Provide as-built record drawings to the Owner at the completion of the project.

PART 2 - PRODUCT REQUIREMENTS

2.1 PIPING, FITTINGS, AND JOINING MATERIAL

A. High Density Polyethylene (HDPE) pipe shall be ASTM D 3350, SDR 11, Cell Classification of PE 3454344C with butt-used joints. All fittings shall be of compatible HDPE material and shall be butt-fused. Provide IPF, Driscopipe or equivalent.

B. Non sanitary pressure hose shall be #2710 rated for minimum 150 PISG working pressure. Hose shall be as supplied by the following:

Crouch Supply Co, Inc.; 305 S. Main Street; Fort Worth, Texas 76104
Attn.: Marvin Carr 1-800-825-1110

An equivalent hose product by alternative manufacturers shall be acceptable

C. Elbows, flanges and accessories shall be 316 stainless steel construction including plates, bolts, washers, nuts and other components as may be required.

D. Piping identification shall be Seton Snap-Around Pipe Markers or equivalent type of labels. Provide red color band with green legend band. White lettering on the legend band shall read "Fire Water".

2.2 FIRE HOSE CABINETS AND ACCESSORIES

A. Existing fire hose cabinets, hose valves, hoses, nozzels shall be reused. New fire supression cabinet to be installed by contractor.

2.3 FIRE EXTINGUISHERS AND ACCESSORIES

A. Fire extinguishers shall be five pound capacity, 2A:10B:C multi-purpose agent (mono-ammonium phosphate) type units. Cylinders shall be aluminum construction with epoxy powder or baked enamel finish. Valves shall be chrome plated brass. Handles and levers shall be stainless steel. Extinguisher shall be US Coast Guard Approved. Include stainless steel mounting bracket.

B. Fire extinguisher cabinets shall be powder-coated aluminum construction, deck mounted type of a size to accommodate the fire extinguisher specified above. Provide cabinet complete with breakaway glass, stainless steel lockable handle, stainless steel hinges and finish color to match existing fire hose cabinets. Provide signage on both sides of the cabinet indicating in large red letters, "Fire Extinguisher". Contractor to install New extinguisher pedestals.

2.4 PIPE SUPPORTS

A. Fire extinguishment system supports shall be in accordance with NFPA 14 and shall be as provided by the frame and structure of the floating dock. No pipe hangers are permitted. Securement devices shall be strap anchors or related products by Grinnell, Modern Hanger or BLine. All anchors and accessories such as mechanical fasteners, washers, etc. shall be 316 Stainless Steel construction.

PART 3 - EXECUTION REQUIREMENTS

3.1 EXAMINATION

A. Examine rough-ins for piping, equipment and supports and verify actual locations, sizes and other conditions affecting system performance, maintenance, and operations prior to equipment installation.

B. Identify exact locations of existing services to be reused.

C. Proceed with installation only after unsatisfactory conditions have been corrected.

3.2 INSTALLATION OF PIPING

A. Select HDPE pipe with butt fused joints and fittings for all fire water piping except as noted otherwise.

B. Select non-sanitary pressure hose #2612 for flexible connection between landside pipe and pier side pipe.

C. Install piping at right angles or parallel to seawalls and joists.

D. Install fittings for changes in direction and branch connections.

E. Install piping and hoses in strict accordance with the manufacturer's installation instructions and recommendations.

3.3 INSTALLATION OF PIPE SUPPORTS

A. Install supports, anchors and fasteners for fire extinguishment systems in accordance with the NFPA 14 and pipe manufacturers written installation instructions. Minimum support requirements shall be as indicated in the following schedule:

Pipe size	Support Spacing
2-1/2 Inch Diameter and larger	48 Inches Maximum

B. Pipe support spacing shall be as listed above except that horizontal runs of piping shall be supported at least once for each pipe section and at each joint. Provide minimum of one support for each elbow.

3.4 INSTALLATION OF FIRE HOSE CABINETS AND ACCESSORIES

A. Install fire hose cabinets and accessories at locations indicated on the plans and as directed by the Authority Having Jurisdiction.

B. Mount equipment securely to decking with mechanical fasteners. Install in strict accordance with the manufacturer's installation instructions and recommendations.

3.5 INSTALLATION OF FIRE EXTINGUISHERS AND CABINETS

A. Install fire extinguishers and cabinets at locations indicated on the plans and as directed by the Authority Having Jurisdiction.

B. Mount cabinet securely to decking with mechanical fasteners. Install in strict accordance with the manufacturer's installation instructions and recommendations.

3.6 INSTALLATION OF IDENTIFICATION SIGNAGE

A. Attach pipe markers on fire extinguishment system piping. Space markers at no greater than 25 feet on center.

3.7 FIRE EXTINGUISHMENT SYSTEM ACCEPTANCE TESTING

A. Flush, test and inspect standpipe systems according to NFPA 14. Provide completed Contractor's Material and Test Certificate, Figure 11.13 (a), for standpipe systems to the Engineer and to the Owner.

B. Prepare and install inspection tags for each extinguisher in accordance with NFPA 10. Inspect all extinguishers and replace defective or discharged units discovered at final acceptance inspection.

The Contractor shall verify and be responsible for all dimensions. DO NOT scale the drawing - any errors or omissions shall be reported to Stantec without delay.
The Copyrights to all designs and drawings are the property of Stantec. Reproduction or use for any purpose other than that authorized by Stantec is forbidden.

NOTE: ALL DEPTHS REFERENCE MEAN LOW WATER PER DEP TIDE STATION 872-4542. MEAN HIGH WATER EL. -0.23' NAVD88; MEAN LOW @ -1.24' NAVD88.

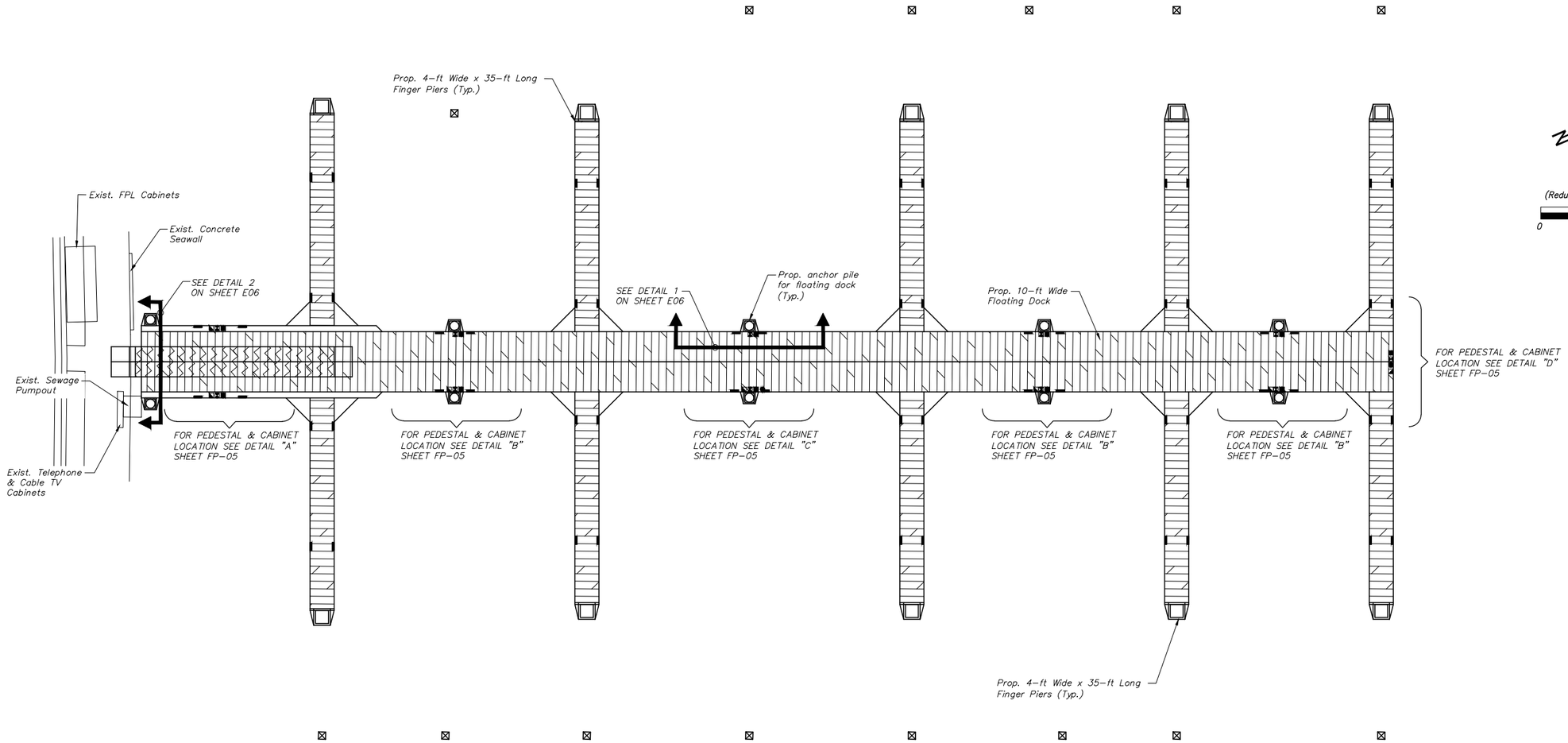

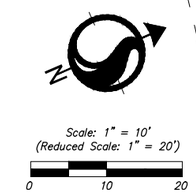

DETAIL A - PROPOSED DOCK

Revision	By	Appd.	YY.MM.DD

Issued	By	Appd.	YY.MM.DD
C			
B			
A			

Seal

ED DVORAK, P.E.
REGISTERED ENGINEER NO. 40961
STATE OF FLORIDA

Consultants

Stantec
901 Ponce de Leon Blvd. Suite 900
Coral Gables, Florida 33134
www.stantec.com

The Contractor shall verify and be responsible for all dimensions. DO NOT scale the drawing - any errors or omissions shall be reported to Stantec without delay.
The Copyrights to all designs and drawings are the property of Stantec. Reproduction or use for any purpose other than that authorized by Stantec is forbidden.

CITY OF KEY WEST
SAILFISH PIER DOCK REPLACEMENT
Key West, Florida

File Name:

PKM	JFT	PKM	15.08.12
Dwn.	Chkd.	Dsgn.	YY.MM.DD

DOCK DETAIL

Project No.	Scale
215612745	SEE PLANS

Drawing No.	Sheet	Issue /Revision
FP-04	of 27	

J:\215612745\active\215612745\mechanical\drawing\118726P-04_dock Detail.dwg
2016/7/19 9:58 AM By: Morales, Ted
ORIGINAL SHEET - ANSI D HORIZ

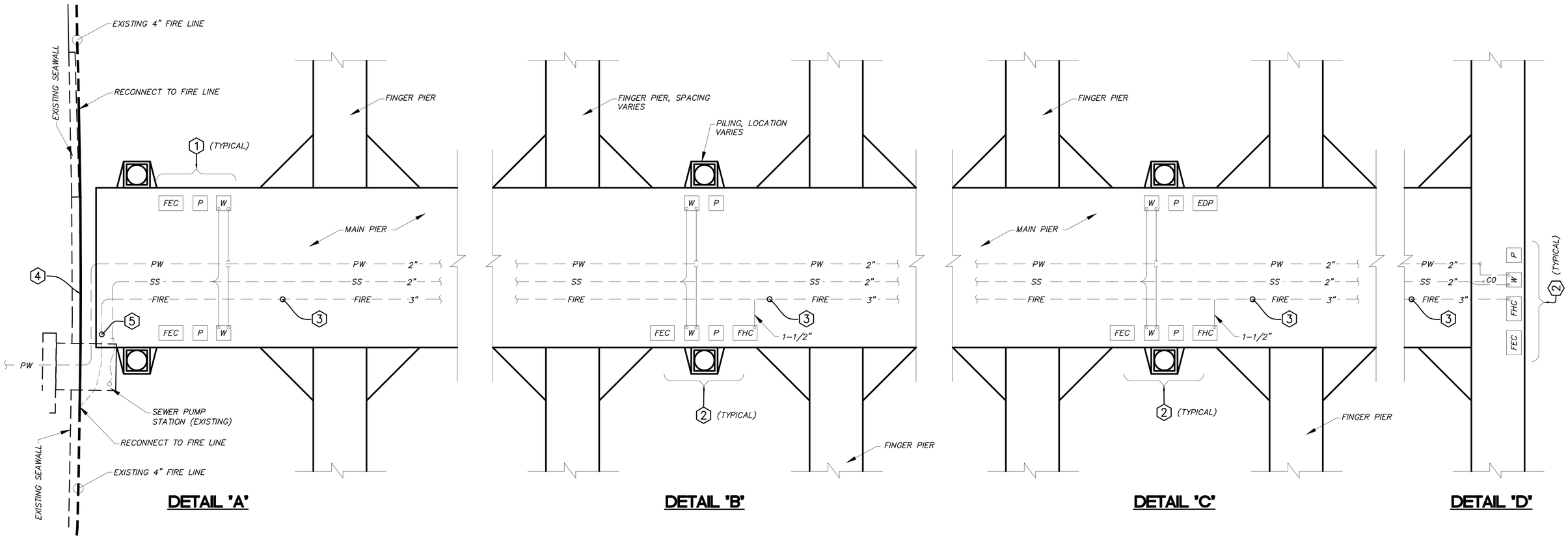

PEDESTAL COORDINATION DIAGRAM

SCALE: NTS

KEY NOTES (X)

1. POSITION UTILITY PEDESTAL AND CABINETS AS CLOSE TO END OF MAIN PIER AS POSSIBLE TO MAXIMIZE CLEAR SPACE FROM EQUIPMENT UP TO FINGER PIER.
2. CENTER THE UTILITY PEDESTAL AND CABINETS BETWEEN FINGER PIERS AND POSITION EQUIPMENT SO AS TO MAXIMIZE CLEAR SPACE FROM EQUIPMENT TO FINGER PIER.
3. ROUTE FIRE LINE BELOW DECK IN TRAY BETWEEN LONGITUDINAL FRAMING.
4. EXISTING FIRE LINE IS ROUTED EXPOSED ALONG SEAWALL PROVIDE NEW PIPING AS REQUIRED TO OFFSET BELOW PROPOSED SEAWALL PENETRATIONS FOR POTABLE WATER, ELECTRICAL POWER CONDUCTORS AND COMMUNICATIONS CABLING, COORDINATE WITH OTHER TRADES FOR REQUIREMENTS. PROVIDE TRANSITION COUPLINGS TO CONNECT EXISTING CPVC PIPING TO SPECIFIC PIPE.
5. PROVIDE FIRE LINE HOSE TO CONNECT PIPING TO PIER. HOSE TERMINATIONS SHALL BE ASTM 316 STAINLESS STEEL ELBOWS. SELECT LENGTH OF HOSE AS REQUIRED TO ACCOMMODATE TIDE DIFFERENTIAL.

GENERAL NOTES

A. SS, PW AND ELECTRICAL SYSTEMS SHOWN FOR COORDINATION PURPOSE. SEE CONSTRUCTION PLANS OF OTHER TRADES FOR ADDITIONAL INFORMATION.

B. COORDINATE FRAMING REQUIREMENTS FOR PIPING SYSTEM WITH FLOATING DOCK SYSTEM SUPPLIER.

Revision	By	Appd.	YY.MM.DD

Issued	By	Appd.	YY.MM.DD
C			
B			
A			

Seal

ED DVORAK, P.E.
REGISTERED ENGINEER NO. 40961
STATE OF FLORIDA

Consultants

Stantec
901 Ponce de Leon Blvd. Suite 900
Coral Gables, Florida 33134
www.stantec.com

The Contractor shall verify and be responsible for all dimensions. DO NOT scale the drawing - any errors or omissions shall be reported to Stantec without delay.
The Copyrights to all designs and drawings are the property of Stantec. Reproduction or use for any purpose other than that authorized by Stantec is forbidden.

CITY OF KEY WEST
SAILFISH PIER DOCK REPLACEMENT
Key West, Florida

File Name:	PKM	JFT	PKM	15.08.12
	Dwn.	Chkd.	Dsgn.	YY.MM.DD

PEDESTAL COORDINATION DIAGRAM

Project No.	Scale	
215612745	NO SCALE	
Drawing No.	Sheet	Issue /Revision
FP-05	of 27	

\\172.161.vcdive\215612745\mechanical\drawing\11872FP-04_fire_section.dwg
2016/07/19 9:33 AM By: Nicholas, Todd
ORIGINAL SHEET – ANSI D HORIZ

PLUMBING DESIGN

SAILFISH PIER, GARRISON BIGHT MARINA KEY WEST, FL

A. GIVEN: 18 SLIPS, ASSUME 9@ 2–2 AND 9@ 2–1

B. USE HUNTER'S METHOD = CURVE [PLUMBING DESIGN]

HOUSE BOAT 2 BED 2 BATH		FU
K. SINK	1	2
LAV.	2	2
WATER CLOSET (TANK)	2	6
SHOWER	2	4
		14

HOUSE BOAT 2 BED 1 BATH		FU
K. SINK	1	2
LAV.	1	1
WATER CLOSET (TANK)	1	3
SHOWER	1	2
		8

C. TOTAL FU: 9 SLIPS X 14= 126 FU
9 SLIPS X 8= 72 FU
198 FU

PER HUNTER CURVE= 64 gpm TOTAL

D. PER HYDRAULIC TABLES

FOR 64 gpm USE 2" PE PIPE VELOCITY= 6.2< 8fps

E. SERVICE SIZING=
DUAL= 28 FU 20 gpm
PROVIDE 1" DIA. SERVICE PIPE

SINGLE= 14 FU= 11 gpm
PROVIDE 3/4" DIA. SERVICE PIPE

DRAWING SYMBOLS

1 / P03 — PLAN OR DIAGRAM DESIGNATION / DRAWING NUMBER WHERE DRAWN

A / P04 — SECTION DESIGNATION / DRAWING NUMBER WHERE DRAWN

FW — FIRE WATER PIPE

PW — POTABLE WATER PIPE

POTABLE WATER PIPE

SW — SANITARY VACUUM PIPE

PIPE TURN UP

PIPE TURN DOWN

RISE OR DROP IN PIPE

SIDE CONNECTION

BOTTOM CONNECTION

TOP CONNECTION

CROSS BOTTOM CONNECTION

CHECK VALVE

BALL VALVE

CO — SEWER CLEANOUT

N — PLAN NORTH

0' 5' 10' 15' 20' 1"=10' — GRAPHIC SCALE

X — KEYED NOTE

X — REVISION NUMBER

CONNECT TO EXISTING

W — POTABLE WATER AND SANITARY SEWER DOCK BOX

FEC — FIRE EXTINGUISHER CABINET

FHC — FIRE HOSE CABINET

P — ELECTRICAL POWER PEDESTAL

EDP — ELECTRICAL DISTRIBUTION PANEL

EX — EXISTING

HB — HOSE BIBB

Revision	By	Appd.	YY.MM.DD

Issued	By	Appd.	YY.MM.DD
C			
B			
A			

Seal

ED DVORAK, P.E.
REGISTERED ENGINEER NO. 40961
STATE OF FLORIDA

Consultants

Stantec
901 Ponce de Leon Blvd. Suite 900
Coral Gables, Florida 33134
www.stantec.com

The Contractor shall verify and be responsible for all dimensions. DO NOT scale the drawing - any errors or omissions shall be reported to Stantec without delay.
The Copyrights to all designs and drawings are the property of Stantec. Reproduction or use for any purpose other than that authorized by Stantec is forbidden.

CITY OF KEY WEST
SAILFISH PIER DOCK REPLACEMENT
Key West, Florida

File Name:

PKM	JFT	PKM	15.08.12
Dwn.	Chkd.	Dsgn.	YY.MM.DD

PLUMBING LEGEND

Project No.	Scale	
215612745	NTS	
Drawing No.	Sheet	Issue /Revision
P01	of 27	B/0

V:\215612745\active\215612745\mechanical\drawing\118729-01_lgnd.dwg
2017/07/19 9:26 AM By: Moreno, Yoel
ORIGINAL SHEET – ANSI D HORIZ

PLUMBING SYSTEM SPECIFICATIONS

PART 1 - GENERAL REQUIREMENTS

1.1SYSTEM DESCRIPTION

A. Sailfish Pier plumbing systems shall consist of potable water distribution and sanitary vacuum extended from existing landside utilities and shall include potable water and sanitary sewer dock cabinets.

1.2SUMMARY OF WORK

A. New construction work shall include but is not limited to providing complete new potable water distribution systems and sanitary vacuum systems as described in these specifications and drawings for the proposed pier.

B. Bids shall include as a minimum all labor, tools, materials, plant, transportation, taxes, related items, etc., essential for demolishing existing work and furnishing, installing, operating and testing of the proposed new work.

1.3EXAMINATION OF DOCUMENTS

A. The intent of the drawings and specifications is to establish type and quality of materials and a general layout and location of components that comprise the plumbing systems. They are not intended to show in minute detail every or all accessories intended for the purposes of executing the work, but it is understood that such details are part of the project scope.

B. Where conflicts exist between drawings and specifications the most stringent requirements shall apply.

1.4CODES AND STANDARDS

A. Furnish and install plumbing systems to meet all current requirements of national, state and municipal codes, rules, regulations, laws, and standards as they are adopted by the governing agency and as they may apply.

Florida Building Code, Building 2010 Edition

Florida Building Code, Plumbing 2010 Edition

Underwriters Laboratories

1.5PERMITS AND INSPECTIONS

A. Secure and pay for all permits and licenses before actual work is started and observe all requirements stipulated thereon.

B. Coordinate with and give all necessary notices to the Authority Having Jurisdiction for inspection and testing of the plumbing systems required to be witnessed by their agent.

1.6SHOP DRAWING SUBMITTALS AND PRE-INSTALLATION COORDINATION

A. Prior to ordering materials submit shop drawings including manufacturer's catalog cuts, brochures and performance data of pipe and fitting materials, hoses, valves, supports, pipe markers, dock boxes, and other appurtenances as may be required. Unless specified elsewhere, provide a minimum of six copies for review by Engineer and Owner.

B. Coordinate with all trades in submittal of shop drawings and for space requirements. If work is installed prior to coordination with other trades which interferes with related work, make all necessary changes to correct the condition at no additional cost to the Owner.

C. Coordinate with floating dock supplier for pipe support spacing requirements integral with structural framing.

1.7PRODUCTS AND WORKMANSHIP

A. All equipment and materials shall be new and unused as manufactured by companies regularly engaged in the fabrication of the type specified except as otherwise noted herein. Use products of a single manufacturer for similar type equipment. Modified or re-built equipment or materials are not acceptable.

B. Provide plumbing components and system installation capable of sustaining the following minimum working pressure ratings:

Water Distribution Systems: 125 PSIG.

Sanitary Systems: 29 Inches of Hg Vacuum.

C. Install plumbing systems in a neat and workmanlike manner utilizing personnel licensed and skilled in the trades.

1.8WARRANTY

A. Provide an unconditional warranty from failure and/or defects on all products and workmanship provided for this project for a minimum of one (1) year from date of substantial completion.

1.9DELIVERY AND STORAGE

A. Handle, store and protect equipment and materials in accordance with the manufacturer's recommendations. Replace damaged or defective items with new items.

1.10 DEMOLITION, CUTTING AND PATCHING

A. Protect all existing active services against damage including water, electric, sewer, etc., in areas of proposed construction. If active services are encountered that require relocation, make request to Owner for determination of procedures.

B. Remove and dispose of properly off-site, all abandoned plumbing piping, valves, pipe supports, equipment, etc., rendered obsolete by work of this project.

C. Provide all necessary cutting and patching required in connection with plumbing work. Coordinate with and obtain written approval from the Marine Contractor for all proposed cutting and patching prior to commencement of work. Sawcut existing pavement or concrete and excavate as required for installation of underground piping. Backfill and compact soil and provide finished surfaces to match adjacent materials and construction.

1.11 CLEANING

A. Clear away all debris, surplus materials, etc., resulting from plumbing system installation work and operations. Leave the job and equipment provided under contract in a clean and first-class condition.

1.12 TEST AND DEMONSTRATIONS

A. Perform tests of the plumbing systems as specified herein. Repeat as required until proven acceptable to the Engineer, Owner and Authority Having Jurisdiction. Provide all gauges, tools, pumps, gas, air or other required equipment or materials.

1.13 RECORD DOCUMENTS

A. Maintain at the job site one set of prints on which are recorded all field changes and other portions of the plumbing system work that vary from the contract documents. Indicate actual pipe system routing and installed accessories and devices.

B. Provide as-built record drawings to the Owner at the completion of the project.

PART 2 - PRODUCT REQUIREMENTS

2.1 PIPING, FITTINGS, AND JOINING MATERIAL

A. Dock piping shall be High Density Polyethylene (HDPE). HDPE pipe shall be ASTM D 3350, SDR 11, Cell Classification of PE 3454344C with butt-used joints. All fittings shall be of compatible HDPE material and shall be butt-fused. Provide pipe and fittings as manufactured by IPF, Driscopipe or equivalent.

B. Poly (Vinyl Chloride) (PVC) Plastic Pipe: ASTM D 2665, Schedule 40, plain ends, socket type fittings and ASTM D 2564 solvent cement.

C. Poly (Vinyl Chloride) (PVC) Plastic, Pressure Pipe: ASTM D 1785, SDR 21, plain ends, ASTM D 2467 socket type fittings. Solvent cement shall be ASTM D 2564 with ASTM F 656 primer. Plastic pipe-flanges and gaskets shall be of type and material recommended by the piping system manufacturer. Bolts, washers and nuts shall be Type 316 Stainless Steel.

2.2 HOSES

A. Sanitary hose shall be #2710 as supplied by the following:

Crouch Supply Co., Inc.; 305 S. Main Street; Fort Worth, Texas 76104
Attn.: Marvin Carr 1-800-825-1110

An equivalent hose product by alternative manufacturers shall be acceptable.

B. Elbows, flanges and accessories shall be 316 Stainless Steel construction including plates, bolts, washers, nuts and other components as may be required.

2.3 PLUMBING VALVES AND ACCESSORIES

A. Manual ball valves shall be CPVC body with Stainless Steel ball, TFE seats and seals, threaded union or flanged ends, lever handle, conventional port, 400 psig w.o.g. pressure at maximum working temperature of 150 degrees F.

B. Potable water check valves shall be marine grade, bronze body dual check type, complying with ASSE 1024, and complete with two compact replaceable check modules.

C. Hose bibbs shall be marine grade, bronze body with integral vacuum breaker, complying with ASSE 1011, and plastic handle.

D. Sanitary vacuum cabinet shall be similar to and compatible with existing assemblies of the marina. Inlet connection shall mate with existing slip to houseboat hoses. Assembly shall include camlock and closer cap, marine grade bronze lift check valve and manual ball valve.

2.4 POTABLE WATER AND SANITARY SEWER CABINET

A. Dock box shall be designed and constructed specifically for marine applications. Cabinet shall be as minimum Type 5052, 090 gauge, marine grade aluminum construction with welded joints and powder coated gloss white finish inside and outside. Cabinet size shall be designed to accommodate two water supply assemblies and two sanitary vacuum assemblies except where serving a single slip as indicated on the plans. Product shall be similar to existing cabinets on the Kingfish Pier and Tarpon Pier and shall be as manufactured by Marina Power Company, Miami, Florida or equivalent owner approved product.

B. Cabinets shall be complete with a tapered aluminum top and shall include Type 316 Stainless Steel hinges and latch. The two side faces of the cabinet shall each have aluminum hose hangers. Aluminum components shall be constructed and finished as described above. Cabinet shall have flanges or mounting plates as suitable for mechanically fastening the unit to the surface of the deck.

C. Potable water supply assemblies located inside the cabinet shall include RF transmitter and water meter, ¾" brass check valve, ¾" manual ball valve and interconnecting piping. The RF transmitter and water meter shall be furnished by the Key West Utility Department and installed within the cabinet by the plumbing contractor. The RF transmitters shall be mounted on the inboard (deck side) face of the cabinet. Dock box manufacturer shall coordinate with the Utility for space and mounting requirements. Each assembly shall be connected to an externally mounted brass hose bibb with vacuum breaker mounted on the outboard (slip side) face of the cabinet. A 1" water supply pipe shall feed through the bottom of the cabinet. Within the cabinet the 1" line shall tee off to supply two ¾" lines and extend to the water meters.

D. Sanitary sewer vacuum assemblies located inside the cabinet shall include 1-1/2" brass check valve, 1-1/2" manual ball valve and interconnecting piping. Each assembly shall be connected to an externally mounted 1-1/2" vacuum sewer 90 degrees camlock and closer cap located on the outboard (slip side) face of the cabinet below the potable water hose bibbbs. A 1-1/2" sanitary vacuum pipe shall feed through the bottom of the cabinet. Within the cabinet the pipe shall branch off with a Y or lateral fitting to connect to the two 1-1/2" vacuum inlets.

2.5 PIPE SUPPORTS

A. Plumbing system supports shall be as provided by the frame and structure of the floating dock. No pipe hangers are permitted. Securement devices shall be strap anchors or related products by Grinnell, Modern Hanger or B-Line. All anchors and accessories such as mechanical fasteners, washers, etc., shall be 316 Stainless Steel construction.

2.6 PIPE IDENTIFICATION

A. Piping identification shall be Seton Snap-Around Pipe Markers or equivalent type of labels. For potable water piping provide blue color band with green legend band. White lettering on the legend band shall read "Potable Water". For sanitary vacuum piping provide yellow color band with black legend band. White lettering on the legend band shall read "Sanitary Sewer".

PART 3 - EXECUTION

3.1 EXAMINATION

A. Examine rough-ins for piping, equipment and supports and verify actual locations, sizes and other conditions affecting system performance, maintenance, and operations prior to equipment installation.

B. Identify exact locations of existing services to be reused.

3.2 EXCAVATION, BACKFILL, COMPACTION AND SURFACE FINISHING

3.3 INSTALLATION OF PIPING

A. Use pipe, fittings and joining methods for piping systems according to the following applications:

Water Distribution Mains Larger than 1 Inch diameter shall be HDPE
Water Distribution Landside to Pier side Flexible Connections shall be Sanitary Hose #2710
Water Distribution Branches Less than or equal to 1 inch diameter shall be PVC SDR 21

Sanitary Vacuum Mains shall be HDPE
Sanitary Vacuum Landside to Pier side Flexible Connections shall be Sanitary Hose #2710
Sanitary Vacuum Branch Lines to Hydrants shall be PVC Schedule 40

B. Install piping at right angles or parallel to seawalls and framing members.

C. Install fittings for changes in direction and branch connections. Use long sweep fittings for sanitary vacuum piping.

D. Install piping and hoses in strict accordance with the manufacturer's installation instructions and recommendations.

3.4 INSTALLATION OF PIPE SUPPORTS

A. Install supports, anchors and fasteners for plumbing systems in accordance with the Florida Plumbing Code and pipe manufacturers written installation instructions. See plans for additional requirements. Minimum support requirements shall be as indicated in the following schedule:

Pipe size	Support Spacing
2 Inch Diameter and smaller	36 Inches Maximum
2-1/2 Inch Diameter and larger	48 Inches Maximum

B. Pipe support spacing shall be as listed above except that horizontal runs of piping shall be supported at least once for each pipe section and at each joint. Provide minimum of one support for each elbow.

3.5 INSTALLATION OF CABINETS AND ACCESSORIES

A. Install cabinets at locations indicated on the plans and as directed by the Engineer and the Owner.

B. Mount equipment securely to framing and/or decking with mechanical fasteners. Install in strict accordance with the manufacturer's installation instructions and recommendations.

C. Install potable water RF meters that are furnished by the water utility company. Coordinate space requirements.

3.6 INSTALLATION OF IDENTIFICATION LABELS

A. Attach pipe markers on plumbing system piping mains. Space markers at no greater than 25 feet on center.

3.7 TESTING OF POTABLE WATER DISTRIBUTION SYSTEMS

A. Perform a Hydro-static pressure Test for leaks and defects in new water distribution piping systems. If testing is performed in segments, submit separate report for each test, complete with diagram of portion of system tested.

B. Cap and subject the piping system to a static water pressure of 125 PSIG or 50 PSIG above the operating pressure without exceeding pressure rating of piping system materials. Isolate test source and allow to stand for 4 hours. Leaks and loss in test pressure constitute defects that must be repaired.

C. Repair leaks and defects with new materials and retest system or portion thereof until satisfactory results are obtained.

D. Prepare reports for tests and required corrective action.

3.8 TESTING OF SANITARY PIPING SYSTEMS

A. Perform a Static Vacuum Test for leaks and defects in sanitary piping systems. If testing is performed in segments, submit a separate report for each test, complete with a diagram of the portion of the system tested.

B. Cap and subject the piping system to a static vacuum pressure of 12 inches of Hg. Isolate test source and allow to stand for 4 hours. Leaks and loss of test pressure . constitute defects that must be repaired.

C. Repair leaks and defects using new materials and retest system or portion thereof until satisfactory results are obtained

D. Prepare reports for tests and required corrective action.

3.9 CLEANING

A. Purge new potable water distribution piping systems prior to use.

B. Use purging and disinfecting procedure prescribed by authority having jurisdiction or, if a method is not prescribed by that authority, the procedure described in either AWWA C651 or AWWA C652 or as described below:

Flush piping system with clean, potable water until dirty water does not appear at outlets. Fill system or part thereof with water/chlorine solution containing at least 50 parts per million of chlorine. Isolate (valve off) and allow to stand for 24 hours. Provide proper signage to prevent accidental use during disinfection. Drain system or part thereof of previous solution and refill with water/chlorine solution containing at least 200 parts per million of chlorine. Isolate and allow to stand for 3 hours. Flush system with clean, potable water until chlorine does not remain in water coming from system following allowed standing time.

C. Submit water samples in sterile bottles to authority having jurisdiction. Repeat procedure if biological examination made by the authority shows evidence of contamination. Provide 2 consecutive days of approved bacterological test.

D. Prepare and submit reports for purging and disinfecting activities.

The Contractor shall verify and be responsible for all dimensions. DO NOT scale the drawing - any errors or omissions shall be reported to Stantec without delay.
The Copyrights to all designs and drawings are the property of Stantec. Reproduction or use for any purpose other than that authorized by Stantec is forbidden.

CITY OF KEY WEST
SAILFISH PIER DOCK REPLACEMENT
Key West, Florida

File Name:	PKM Dwn.	JFT Chkd.	PKM Dsgn.	15.08.12 YY.MM.DD

PLUMBING SPECIFICATIONS

Project No.	Scale	
215612745	NTS	
Drawing No.	Sheet	Issue /Revision
P02	of 27	B/0

\\215612745\active\215612745\mechanical\drawing\118729-02_specs.dwg
2019/01/19 9:58 AM By: Dvorak, Ed
ORIGINAL SHEET - ANSI D HORIZ

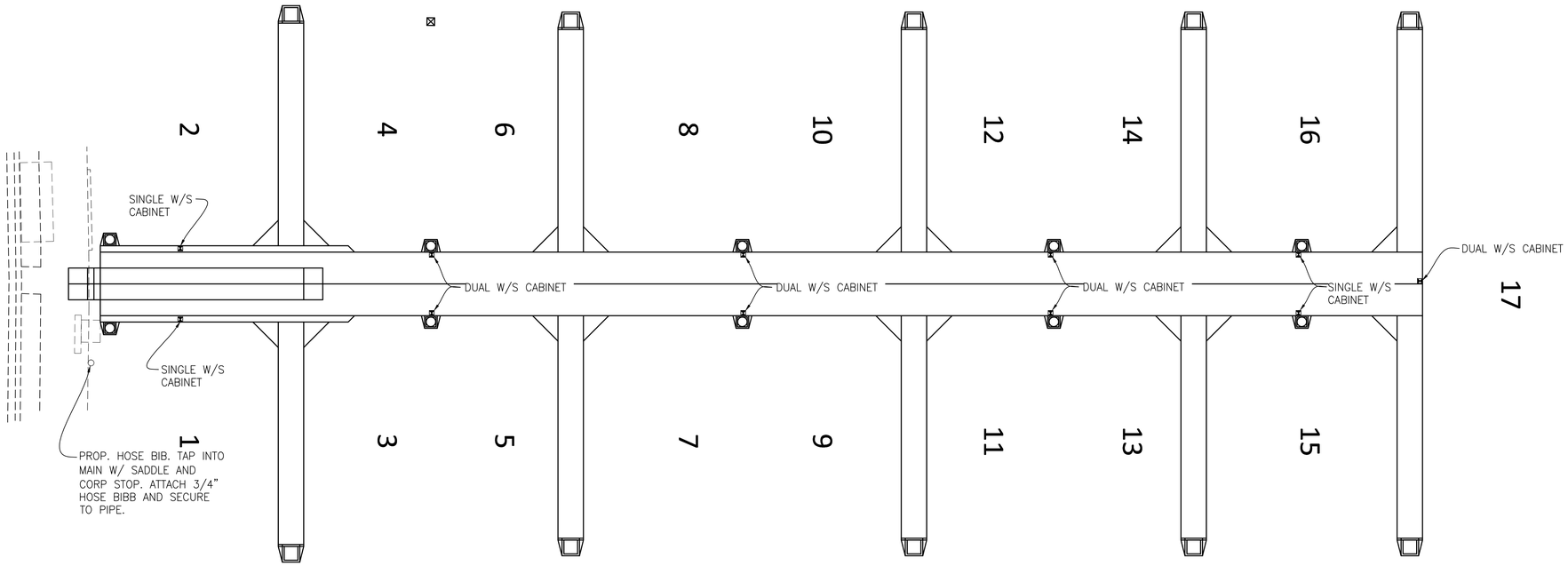

Scale: 1" = 10'
(Reduced Scale: 1" = 20')
0 10 20

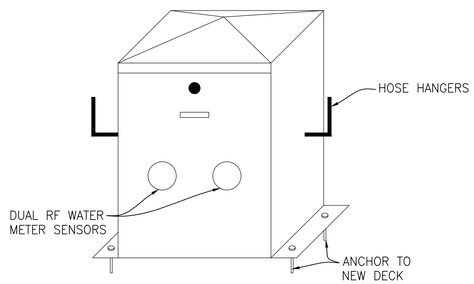

NOTES:
1. PROVIDE 1" SERVICE TO EACH CABINET.

DUAL WATER + SEWER MARINE CABINET DETAIL

SCALE: NTS

811 KNOW WHAT'S BELOW ALWAYS CALL 811 BEFORE YOU DIG
It's first. It's free. It's the law.
www.callsunshine.com

Revision	By	Appd.	YY.MM.DD
8			
7			
6			
5			
4			
3			
2			
1			

Issued	By	Appd.	YY.MM.DD
H			
G			
F			
E			
D			
C			
B			
A			

Seal

MARTIN S. ARMENTA, P.E.
REGISTERED ENGINEER NO. 75333
STATE OF FLORIDA

Consultants

Stantec
901 Ponce de Leon Blvd. Suite 900
Coral Gables, Florida 33134
www.stantec.com

The Contractor shall verify and be responsible for all dimensions. DO NOT scale the drawing - any errors or omissions shall be reported to Stantec without delay.
The Copyrights to all designs and drawings are the property of Stantec. Reproduction or use for any purpose other than that authorized by Stantec is forbidden.

CITY OF KEY WEST
SAILFISH PIER DOCK REPLACEMENT
Key West, Florida

File Name:

Dwn.	Chkd.	Dsgn.	YY.MM.DD
PKM	JFT	PKM	15.08.12

PLUMING SITE PLAN

Project No. 215612745
Scale 1"=10' 0' 5' 10' 15' 20'
Drawing No. P03
Sheet of 27
Issue /Revision C/0

Y:\215612745\active\215612745\mechanical\drawing\118729-04_plan View.dwg
2016/01/19 9:39 AM By: Morales, Rod

ORIGINAL SHEET – ANSI D HORIZ

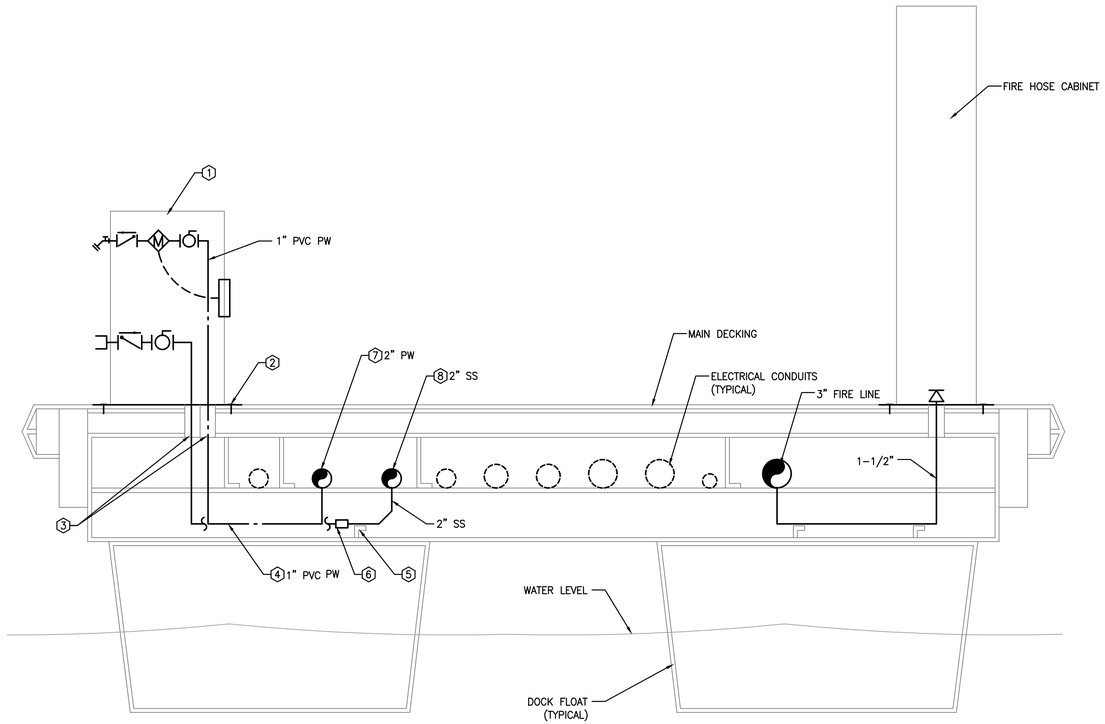

PLUMBING - SECTION THRU MAIN PIER

SCALE: NTS

KEY NOTES (X)

1. SINGLE SLIP POTABLE WATER & SANITARY SEWER CABINET. INSTALL DOCK BOX NEAR OUTBOARD EDGE OF PIER SO AS TO OPTIMIZE AVAILABLE SPACE FOR PEDESTRIAN TRAFFIC IN THE CENTER OF THE PIER. ORIENT CABINET WITH HOSE BIBBS TO THE OUTBOARD SIDE AND RF METER READER DEVICES TO THE INBOARD SIDE. SEE SPECIFICATIONS FOR ADDITIONAL INFORMATION AND WORK ITEMS.
2. SECURE CABINET TO DECK WITH MINIMUM OF FOUR STAINLESS STEEL FASTENERS OR AS RECOMMENDED BY CABINET MANUFACTURER.
3. CORE DRILL DECK FOR POTABLE WATER AND SANITARY SEWER PIPE INSTALLATION. MAKE THE OPENING A MINIMUM OF 1 INCH LARGER THAN OUTSIDE DIAMETER OF PIPE. PROVIDE SHRINK WRAP ON THE PIPE AT THE DECK PENETRATION TO PROTECT AGAINST ABRASION.
4. EXTEND PVC PRESSURE PIPE FOR POTABLE WATER SUPPLY TO DOCK CABINET AND TIE INTO SINGLE POINT CONNECTION FOR PW SUPPLY.
5. TYPICAL PIPE SUPPORT STRUT BETWEEN CROSS MEMBERS AT 3-FOOT O.C. SECURE PIPE TO STRUCTURE WITH CLAMP OR EQUIVALENT STRAPPING METHOD.
6. PROVIDE FERNCO OR EQUIVALENT RUBBER BOOT CONNECTOR WITH 316 STAINLESS STEEL HARDWARE TO CONNECT HDPE BRANCH TEE TO PVC-DWV SANITARY CABINET BRANCH PIPE.
7. ROUTE HDPE POTABLE WATER SUPPLY MAIN IN TRAY BETWEEN PIER FRAMING MEMBERS. PROVIDE HDPE TEE FITTING AT EACH PAIR OF PROPOSED POTABLE WATER CABINETS. TRANSITION TO PVC PRESSURE PIPE AFTER BRANCH TEE.
8. ROUTE HDPE SANITARY VACUUM PIPE MAIN IN TRAY BETWEEN PIER FRAMING MEMBERS. PROVIDE HDPE TEE FITTING AT EACH PIER OF PROPOSED CABINETS. USE LONG SWEEP FITTINGS.

Revision	By	Appd.	YY.MM.DD

Issued	By	Appd.	YY.MM.DD
C			
B			
A			

Seal

ED DVORAK, P.E.
REGISTERED ENGINEER NO. 40961
STATE OF FLORIDA

Consultants

Stantec
901 Ponce de Leon Blvd. Suite 900
Coral Gables, Florida 33134
www.stantec.com

The Contractor shall verify and be responsible for all dimensions. DO NOT scale the drawing - any errors or omissions shall be reported to Stantec without delay.
The Copyrights to all designs and drawings are the property of Stantec. Reproduction or use for any purpose other than that authorized by Stantec is forbidden.

CITY OF KEY WEST
SAILFISH PIER DOCK REPLACEMENT
Key West, Florida

File Name:	PKM	JFT	PKM	15.08.12
	Dwn.	Chkd.	Dsgn.	YY.MM.DD

PLUMBING SECTION

Project No.	Scale	
215612745	NO SCALE	
Drawing No.	Sheet	Issue /Revision
P04	of 27	C/0

V:\215612745\active\215612745\mechanical\drawing\11872P-04_plmb_section.dwg
2016/07/29 9:39 AM By: Morales, Raul

ORIGINAL SHEET - ANSI D HORIZ

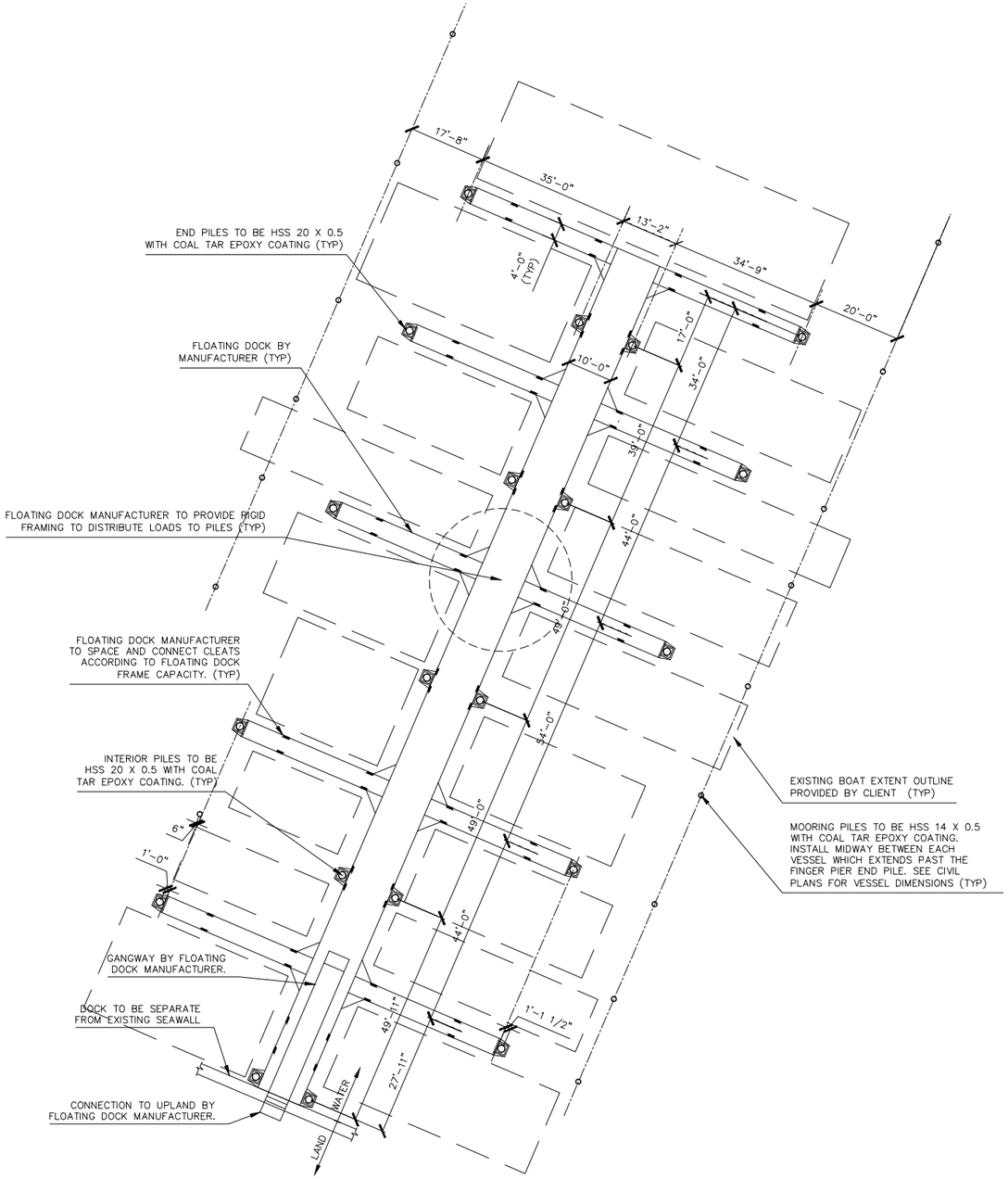

1 PILE PLAN

SCALE: 1/16" = 1'-0"

GENERAL NOTES

1. CONTRACTOR TO FOLLOW ALL DETAILS, SECTIONS, AND PLANS SHOWN IN THE FOLLOWING SHEETS. IF ANY CONFLICTS ARISE OR ALTERNATIVES ARE DESIRED, THE CONTRACTOR MUST NOTIFY THE EOR AND SUPPLY SHOP DRAWINGS PRIOR TO PURCHASING OR INSTALLING MATERIALS.
2. ELEVATIONS SHOWN REFER TO THE NATIONAL GEODETIC VERTICAL DATUM (NGVD) OF 1929.
3. ALL DIMENSIONS ON PLANS ARE SUBJECT TO VERIFICATION IN THE FIELD.
4. IT IS THE INTENT OF THESE PLANS TO BE IN ACCORDANCE WITH APPLICABLE CODES AND AUTHORITIES HAVING JURISDICTION. ANY DISCREPANCIES BETWEEN THESE PLANS AND APPLICABLE CODES SHALL BE IMMEDIATELY BROUGHTTO THE ATTENTION OF THE ENGINEER BEFORE PROCEEDING WITH WORK.
5. IT IS THE INTENT OF THESE PLANS AND THE RESPONSIBILITY OF THE CONTRACTOR TO COMPLY WITH LOCAL, STATE, AND FEDERAL ENVIRONMENTAL PERMITS ISSUED FOR THIS PROJECT. DESIGN COMPLIES WITH FLORIDA BUILDING CODE 2014.
6. OWNER TO NOTIFY THE ENGINEER IF THERE IS A SUBSTANTIAL MODIFICATION TO THE BOTTOM ELEVATION OF THE HARBOR IN THE FUTURE. THIS DESIGN ACCOUNTS FOR A 14' MAX DISTANCE FROM THE MUDLINE TO THE TOP OF DECK.
7. CONTRACTOR TO TAKE PRECAUTIONS TO PREVENT DEBRIS FROM FALLING INTO WATER DURING DEMOLITION.

DESIGN:

1. PILES DESIGNED FOR FOLLOWING ASD LOADS, RESULTANT FROM DESIGN CRITERIA IN NOTE 2.
   A. END & INTERIOR PILE: 16.8K LOAD AT TIP OF 14' CANTILEVER. [ASD]
   B. MOORING PILE: 11.2K LOAD AT TIP OF 14' CANTILEVER [ASD]
2. PILES HAVE BEEN DESIGNED FOR THE FOLLOWING LOAD CRITERIA. FLOATING DOCK MANUFACTURER TO DESIGN DOCKS TO ADHERE TO THE FOLLOWING CRITERIA AS WELL.
   A. 120 MPH FASTEST MILE WIND - FULLY OCCUPIED.
   B. 150 MPH FASTEST MILE - NO MORE THAN ONE BOAT BETWEEN EACH FINGER PIER ON EACH SIDE (30% OCCUPIED).
   C. FLOATING DOCK MANUFACTURER TO NOTIFY EOR IMMEDIATLEY IF THE PILE LOADS IN NOTE 1 ABOVE ARE EXCEEDED IN ANY WAY.
   D. DECK LIVE LOAD = 100PSF
   E. DECK MISC DEAD LOAD = 20 PSF
3. NO CLEATS TO BE INSTALLED ON PILES.
4. THE FOLLOWING PILE QUANTITIES & LATERAL DEFLECTIONS ARE TO BE EXPECTED DURING LOADS IN NOTE 1 ABOVE, PER GEOTECH REPORT.
   A. END PILE & INTERIOR PILES: HSS 20 X 0.5 [20 TOTAL] 3.4"
   B. MOORING PILE: HSS 14 X 0.5 [16 TOTAL] 8.4"

PILES:

1. PILES MUST BE DRIVEN TO DEPTH IN ACCORDANCE WITH GEOTECH REPORT.
2. PILES USED AS GUIDES FOR THE FLOATING DOCK TO BE ATTACHED TO THE DOCKS USING SIDE PILE GUIDE.
   2.1. CONNECTION OF GUIDES TO DOCKS TO CONFORM TO REQUIREMENTS OF MANUFACTURER.
3. ALL PILES TO BE COATED WITH COAL TAR EPOXY PER MANUFACTURERS SPECIFICATIONS.COATING SHOULD BE APPLIED ON INTERIOR AND EXTERIOR OF HSS PILE, AND MUST EXTEND A MINIMUM OF 2' INTO THE SOIL GRADE WITH 16 MIL THICKNESS.
4. HSS PILES TO BE ASTM A500 - Gr. B (Fy = 42ksi)

FLOATING DOCK:

1. FLOATING DOCK TO BE DESIGNED TO RIGIDLY DISTRIBUTE LATERAL FORCES TO PILES AS A GROUP.
2. SUBMIT SHOP DRAWINGS TO EOR FOR APPROVAL FOR DESIGN LOADS.
3. FLOATING DOCK SHOP DRAWINGS MUST BE APPROVED BY EOR AND MEET ALL REQUIREMENTS OF THESE PLANS. REPORT DISCREPANCIES IN DIMENSIONS TO EOR IMMEDIATELY.
4. PILE GUIDE CONNECTION TO RESIST ASD LOADS SHOWN IN DESIGN NOTE #1 AND DEFLECTIONS IN DESIGN NOTE #4.

GEOTECH NOTES:

1. SEE GEOTECH REPORT BY NUTTING ENGINEERS DATED 7/16/15 AND UPDATED OCTOBER 1, 2015.

DELEGATED DESIGNS:

1. CONTRACTOR IS REQUIRED TO SUBMIT ALL DELEGATED DESIGNS TO ENGINEER OF RECORD FOR REVIEW AND APPROVAL THE SIGNED AND SEALED DRAWINGS AND CALCULATIONS BY A LICENSED FLORIDA PROFESSIONAL ENGINEER.
2. ITEMS TO BE DELEGATED
   A. FLOATING DOCKS AND CONNECTIONS.
   B. ALL ITEMS NOT SHOWN ON PLANS.
   C. ANY ITEM MODIFIED FROM EOR PLANS.

Revision	By	Appd.	YY.MM.DD

Issued	By	Appd.	YY.MM.DD

Seal

HEATHER R. ANESTA, P.E.
FLORIDA ENGINEER NO. 74733
ANESTA CONSULTING, INC.

Consultants
ANESTA CONSULTING, INC.
800 NE Morningside Dr, Boca Raton, Florida 33487
Tel: 561-702-2569, Certificate of Authorization #31160

Copyright Reserved
The Contractor shall verify and be responsible for all dimensions. DO NOT scale the drawing - any errors or omissions shall be reported to Anesta Consulting without delay. Reproduction or use for any purpose other than that authorized by Anesta Consulting is forbidden.

Anesta Consulting Project Number: 2015-19013

Stantec
901 Ponce de Leon Blvd. Suite 900
Coral Gables, Florida 33134
www.stantec.com

The Contractor shall verify and be responsible for all dimensions. DO NOT scale the drawing - any errors or omissions shall be reported to Stantec without delay.
The Copyrights to all designs and drawings are the property of Stantec. Reproduction or use for any purpose other than that authorized by Stantec is forbidden.

CITY OF KEY WEST
SAILFISH PIER DOCK REPLACEMENT
Key West, Florida

File Name:	HRA	PC	HRA	16.02.17
	Dwn.	Chkd.	Dsgn.	YY.MM.DD

STRUCTURAL PILE LAYOUT

Project No.	Scale	
215612745		
Drawing No.	Sheet	Revision
S01	of	

F:\Users\heather\Dropbox\2015\Projects\Sailfish Pier\dwg\Sailfish Pier Structural.dwg
2016/02/17 9:09 AM By: Heather

ORIGINAL SHEET – ANSI D HORIZ