BID DOCUMENTS

FOR THE CONSTRUCTION OF THE

REPAIRS AND IMPROVEMENTS AT ZERO DUVAL AND MALLORY SQUARE

PREPARED FOR

CITY OF KEY WEST

MAYOR: CRAIG CATES
COMMISSIONERS:

RICHARD PAYNE
JIMMY WEEKLEY
BILLY WARDLOW

Volume 1 of 2
Specifications

SAM KAUFMAN
CLAYTON LOPEZ
MARGARET ROMERO

For information regarding this project, contact:
SEAN MCCOY
6410 5th Street, Suite 2-A
Key West, FL 33040
305-294-1645

CH2MHILL

CH2M Hill Project No. 439197
Key West Project No. ITB# 16-002
EN-1002
JANUARY 2016

CITY OF KEY WEST

Key West, Florida

BID DOCUMENTS

(ITB #16-002)

for construction of the

REPAIRS AND IMPROVEMENTS AT

ZERO DUVAL AND MALLORY SQUARE

BID DOCUMENTS

VOLUME 1 of 2

****

CONSISTING OF:
BIDDING REQUIREMENTS
CONTRACT FORMS
CONDITIONS OF THE CONTRACT
TECHNICAL SPECIFICATIONS
DRAWINGS

****

CH2M HILL

Key West, FL
JANUARY 2016

©COPYRIGHT 2016 CH2M HILL
Project No. 439197

Pages

CONTENTS

VOLUME 1 OF 2

PART 1—PROCUREMENT REQUIREMENTS

00 11 13 Invitation to Bid 1- 4
00 21 13 Instructions to Bidders 1- 8
00 41 13 Bid Form 1- 8
00 43 13 Florida Bid Bond 1- 2
00 43 16 Anti-Kickback Affidavit 1- 2
00 43 17 Public Entity Crimes Form 1- 2
00 43 18 City of Key West Indemnification Form 1- 2
00 43 19 Equal Benefits for Domestic Partnership Affidavit 1- 6
00 43 20 City of Key West Business License Tax Receipt/Application 1- 2
00 43 21 Cone of Silence 1- 4
00 43 22 Local Vendor Certification 1- 2
00 44 00 Bidders Check List 1- 2
00 44 01 Disclosure of Lobbying Activities Form 1- 4
00 44 02 Non-Collusion Declaration and Compliance Form 1- 4
00 44 03 Florida Trench Safety Act Compliance 1- 2
00 44 04 Suspension and Debarment Certification 1- 2

PART 2—CONTRACTING REQUIREMENTS

CONTRACTING FORMS

00 52 13 Agreement 1- 2

PROJECT FORMS

00 61 13.13 Performance Bond 1- 2
00 61 13.16 Payment Bond 1- 2
00 62 00 Notice of Award 1- 2
00 62 01 Certificate of Substantial Completion 1- 2
00 62 02 Certificate of Final Completion 1- 2
00 62 04 Notice to Proceed 1- 2
00 63 00 Payment Application and Certificate 1- 2
00 63 01 Construction Compliance Certification with Specifications and Plans 1- 2
00 63 02 Certificate of Final Payment 1- 2

CONDITIONS OF THE CONTRACT

00 72 00 General Conditions 1- 44
00 73 00 Supplementary Conditions 1- 10
Exhibit A-J: City of Key West – Sample Insurance Documents
Exhibit K: Event Closure List for Front Street
Exhibit L: FDOT Public Transportation Joint Participation Agreement

©COPYRIGHT 2016 CH2M HILL

Pages

PART 3—SPECIFICATIONS

DIVISION 1 - GENERAL REQUIREMENTS

01 01 00	General Requirements	1- 14
01 11 00	Summary of Work	1- 2
01 29 00	Payment Procedures	1- 4
01 31 19	Project Meetings	1- 4
01 32 00	Progress Schedules	1- 6
01 33 00	Submittals Transmittal of Contractor's Submittal	1- 8
01 42 13	Abbreviations	1- 4
01 50 00	Construction Facilities and Temporary Controls	1- 6
01 77 00	Contract Closeout	1- 4

DIVISION 2 - EXISTING CONDITIONS

02 41 00	Demolition	1- 6

DIVISION 3 - CONCRETE

03 10 00	Concrete Formwork	1- 6
03 21 00	Concrete Reinforcement	1- 4
03 31 29	Cast-In-Place Concrete	1- 22
03 34 00	Cementitious Flowable Fill	1- 4
03 63 00	Concrete Doweling	1- 4

DIVISION 4 - (NOT USED)

DIVISION 5 - METALS

05 05 23	Welding	1- 6
05 50 13	Metal Fabrications	1- 12

DIVISIONS 6 - THROUGH 8 (NOT USED)

DIVISION 9 - FINISHES

09 96 00	Two Component Epoxy Coating	1- 6
09 97 13	Coating of Steel Waterfront Structures	1- 6

DIVISIONS 10 - THROUGH 30 (NOT USED)

©COPYRIGHT 2016 CH2M HILL

Pages

DIVISION 31 - EARTHWORK

31 23 23	Earthwork	1- 10
31 41 17	Steel Sheet Pile Bulkhead	1- 14
31 63 29	Drilled Concrete Piers	1- 2
31 68 13	Permanent Soil Anchors	1- 10

DIVISIONS 32 THROUGH 49 - (NOT USED)

PART 4 - REFERENCE DOCUMENTS

1. Report of Geotechnical Exploration – Zero Duval Seawall – Nutting Engineers, Miami, Florida, dated February 2012, Report No. 126-21.2.

2. Duval Street Seawall Inspection Report by G.M. Selby, WC of Miami, Florida, dated October 2008.

3. Florida Department of Environmental Protection, Environmental Resource Permit, Permit Number 44-0300867-002, dated September 24, 2013.

4. Department of the Army Permit, Permit Number SAJ-2013-01387 NW-IF, dated November 21, 2013.

VOLUME 2 of 2

PART 5 - DRAWINGS (BOUND SEPERATELY)

END OF SECTION

©COPYRIGHT 2016 CH2M HILL

INVITATION TO BID

Sealed bids for the City of Key West Invitation to Bid (ITB #16-002) **Repairs and Improvements at Zero Duval and Mallory Square**, addressed to the City of Key West, will be received at the Office of the City Clerk, City of Key West, 3126 Flagler Avenue., Key West Florida, 33040 until 3:30 p.m., local time, February 24, 2016 and then will be publicly opened and read. Any bids received after the time and date specified will not be considered.

Please submit one (1) original and two (2) USB Drives with one single PDF file of the entire bid package on each USB. Bid package is to be enclosed in a sealed envelope, clearly marked on the outside **"ITB #16-002 REPAIRS AND IMPROVEMENTS AT ZERO DUVAL AND MALLORY SQUARE"** addressed and delivered to the City Clerk at the address noted above.

The project consists of construction at two nearby sites: Mallory Square and Zero Duval, Key West, Florida. At Mallory Square, project consists of demolition of a portion of the Pier "T" deck and construction of a new breasting dolphin with fender using drilled shaft piling and cast-in-place concrete caps with a fender. At Zero Duval, project consists of the temporary removal of the existing wood dock, construction of a new tied back steel sheet pile wall with large outfall pipe, construction of new concrete cap, placement of flowable fill backfill, reinstallation of wood dock, repair of existing outfall pipe and restoration of existing pavers.

Drawings and Specifications may be obtained from Demand Star by Onvia and the City website. Please contact Demand Star at www.demandstar.com or call 1-800-711-1712 or at www.keywestcity.com

A Pre-bid Conference will, be held in at **1:30 p.m. on February 4, 2016** at the Key West Old City Hall, 2nd Floor, 510 Greene Street, Key West, Florida 33040 and continued at Mallory Square and Zero Duval following the Administrative component. The City of Key West encourages attendance by all prospective bidders. The purpose of the meeting will be to discuss particular requirements and answer questions of the prospective bidders relative to completing this project.

Each Bid must be submitted on the prescribed form and accompanied by bid security as prescribed in the Instructions to Bidders, payable to the City of Key West, Florida, in an amount not less than (5) five percent of the amount of the bid. The contractor shall be a licensed contractor by the State of Florida and submit proof of such with the bid.

The successful Bidder will be required to furnish the necessary additional bond(s) for the faithful performance of the Contract, as prescribed in the Bidding Documents. The Bidder will also be required to furnish documentation showing that he is in compliance with the licensing requirements of the State and the provisions of Chapter 66 section 87 of the Code of Ordinances of the City of Key West. Compliance with these provisions is required before the Contractor can enter into the agreement contained in the Contract Documents.

©COPYRIGHT 2016 CH2M HILL

Specifically, Bidder shall demonstrate that he holds, as a minimum, the following licenses and certificates required by State Statute and local codes.

EACH BID MUST BE SUBMITTED ON THE PRESCRIBED FORM AND ACCOMPANIED BY BID SECURITY AS PRESCRIBED IN THE INSTRUCTIONS TO BIDDERS, PAYABLE TO THE CITY OF KEY WEST, FLORIDA, IN AN AMOUNT NOT LESS THAN FIVE (5) PERCENT OF THE AMOUNT BID.

THE BIDDER MUST BE A LICENSED CONTRACTOR BY THE STATE OF FLORIDA AND SUBMIT PROOF OF SUCH WITH THE BID.

The Bidder shall furnish documentation showing that he is in compliance with the licensing requirements of the provisions of Chapter 66 Section 87 of the Code of Ordinances of the City of Key West; within 10 days the following the Notice of Award.

A. City of Key West Tax License Receipt.

All bid bonds, contract bonds, insurance contracts, and certificates of insurance shall be either executed by or countersigned by a licensed resident agent of the Surety or Insurance Company having his place of business in the State of Florida, and in all ways complying with the insurance laws of the State of Florida. Further, the said Surety or Insurance Company shall be duly licensed and qualified to do business in the State of Florida.

Before a Contract will be awarded for the work contemplated herein, the CITY will conduct such investigation as is necessary to determine the performance record and ability of the apparent low Bidder to perform the size and type of work specified under this Contract. Upon request, the Bidder shall submit such information as deemed necessary by the CITY to evaluate the Bidder's qualifications.

For information concerning the proposed work, or for appointment to visit the site of the proposed work, contact Terrence Justice of the City of Key West Engineering Department at (305) 809-3943.

As stated above at the time of the bid submittal the Bidder must provide satisfactory documentation of State Licenses. The Bidder shall furnish documentation showing that he is in compliance with the licensing requirements of County, and City licenses as would be required within ten days of the award. The successful Bidder must also be able to satisfy the City Attorney as to such insurance coverage, licenses, bonds and legal requirements as may be demanded by the Bid in question.

©COPYRIGHT 2016 CH2M HILL

The City may reject bids for any and/or all of the following reasons: (1) for budgetary reasons, (2) if the bidder misstates or conceals a material fact in its bid, (3) if the bid does not strictly conform to the law or is non-responsive to the bid requirements, (4) if the bid is conditional, (5) if a change of circumstances occurs making the purpose of the bid unnecessary to the City, (6) if such rejection is in the best interest of the City. The City may also waive any minor formalities or irregularities in any bid.

©COPYRIGHT 2016 CH2M HILL

©COPYRIGHT 2016 CH2M HILL

INSTRUCTIONS TO BIDDERS

A. CONTRACT DOCUMENTS

1. FORMAT

The Contract Documents are divided into parts, divisions, and sections for convenient organization and reference. Generally, there has been no attempt to divide the Specification sections into work performed by the various building trades, work by separate subcontractors, or work required for separate facilities in the Project.

2. DOCUMENT INTERPRETATION

The separate sections contained within these Contract Documents are intended to be mutually cooperative and to provide all details reasonably required for the execution of the proposed work.

Should there be any doubt as to the meaning or intent of said Contract Documents, the Bidder should request of the Engineer, in writing (at least 10 working days prior to bid opening) an interpretation thereof. Any interpretation or change in said Contract Documents will be made only in writing, in the form of Addenda to the Documents which will be made available on Demand Star and the City website. Bidders shall submit with their Bid, or indicate receipt of, all Addenda. The Owner will not be responsible for any other explanation or interpretations of said Documents.

3. DRAWINGS

Details of construction are bound separately.

B. GENERAL DESCRIPTION OF THE PROJECT

A general description of the work to be done is contained in the Invitation to Bid. The scope is specified in applicable parts of these Contract Documents.

C. QUALIFICATION OF CONTRACTORS

The prospective Bidders must meet the statutorily prescribed requirements before award of Contract by the Owner.

Bidders must hold or obtain all licenses or certificates required by federal, state, or local statutes, or regulations in order to bid and perform the work specified herein.

©COPYRIGHT 2016 CH2M HILL

D. BIDDER'S UNDERSTANDING

Each Bidder must inform himself of the conditions relating to the execution of the work, and it is assumed that he will inspect the site and make himself thoroughly familiar with all the Contract Documents. Failure to do so will not relieve the successful Bidder of his obligation to enter into a Contract and complete the contemplated work in strict accordance with the Contract Documents. It shall be the Bidder's obligation to verify for himself and to his complete satisfaction all information concerning site and subsurface conditions.

The Owner will make available to prospective Bidders upon request and at the office of the Engineer, prior to bid opening, any information that he may have as to subsurface conditions and surface topography at the worksite.

Information derived from inspection of topographic maps, or from Drawings showing location of utilities and structures will not in any way relieve the Contractor from any risk, or from properly examining the Site and making such additional investigations as he may elect, or from properly fulfilling all the terms of the Contract Documents.

Each Bidder shall inform himself of, and the Bidder awarded a Contract shall comply with, federal, state, and local laws, statutes, and ordinances relative to the execution of the work. This requirement includes, but is not limited to, applicable regulations concerning minimum wage rates, nondiscrimination in the employment of labor, protection of public and employee safety and health, environmental protection, the protection of natural resources, fire protection, burning and nonburning requirements, permits, fees, and similar subjects.

E. TYPE OF PROPOSAL - LUMP SUM

Bidders shall submit a Bid on a lump sum basis as set forth in the Bid Form.

F. PREPARATION OF PROPOSALS

1. GENERAL

All blank spaces in the Bid form must be filled in for all schedules and associated parts, as required, preferably in BLACK ink. All price information shall be clearly shown in figures where required. No changes shall be made in the phraseology of the forms. In case of discrepancy between unit prices and extended totals, unit prices shall prevail.

Bids may be rejected which contain omissions, erasures, alterations, or additions of any kind, or prices uncalled for, or in which any of the prices are obviously unbalanced, or which in any manner shall fail to conform to the conditions of the published Invitation to Bid.

©COPYRIGHT 2016 CH2M HILL

Only one Bid from any individual, firm, partnership, or corporation, under the same or different names, will be considered. Should it appear to the Owner that any Bidder is interested in more than one Bid for work contemplated, all Bids in which such Bidder is interested will be rejected.

2. DESCRIPTION OF SUPPLIERS

The manufacturer name, trade name, brand name, or catalog number used in the Specifications is for the purpose of describing and establishing equipment that has been presented for this Project. Other equipment will not be accepted.

3. SIGNATURE

The Bidder shall sign his Bid in the blank space provided therefore. If Bidder is a corporation, the legal name of the corporation shall be set forth above, together with the signature of the officer or officers authorized to sign Contracts on behalf of the corporation. If Bidder is a partnership, the true name of the firm shall be set forth above, together with the signature of the partner or partners authorized to sign Contracts in behalf of the partnership. If signature is by an agent, other than an officer of a corporation or a member of a partnership, a notarized power-of-attorney must be on file with the Owner prior to opening of Bids or submitted with the Bid, otherwise the Bid will be regarded as not properly authorized.

4. SPECIAL BIDDING REQUIREMENTS

The Bidder's attention is brought to the hiring practices and licenses and permits of the City of Key West.

The Bidder shall submit with his Bid his experience record showing his experience and expertise in construction of Marine and heavy civil construction of a similar type and nature to this project. The Contractor shall also be responsible for restoration work (e.g., pavement, curbing, landscape, etc.). Such experience record shall provide at least five current or recent projects of similar work, preferably within Florida or the southeastern United States. For each project the following information shall be provided:

a. Description and location of work.
b. Contract amount.
c. Dates work was performed.
d. Owner.
e. Name of Owner's contact person and phone number.
f. Engineer.
g. Name of Engineer's contact person and phone number.

©COPYRIGHT 2016 CH2M HILL

5. ATTACHMENTS

Bidder shall complete and submit the following forms with this bid:

a. Anti Kickback Affidavit.
b. Public Entity Crimes.
c. Key West Indemnification Form.
d. Disclosure of Lobbying Activities.
e. Non-Collusion Declaration and Compliance with 49 CFR §29.
f. Florida Trench Safety Act Compliance.
g. Suspension and Debarment Certification.
h. Equal Benefits for Domestic Partner Affidavit.
i. Cone of Silence Affidavit.
j. Local Vendor Certification.

6. PUBLIC ENTITY CRIMES

A person or affiliate who has been placed on the convicted vendor list following a conviction for a public entity crime may not submit a bid on a contract to provide any goods or services to a public entity, may not submit a bid on a contract with a public entity for the construction or repair of a public building or public work, may not submit bids on leases of real property to a public entity, may not be awarded or perform work as a contractor, supplier, subcontractor, or consultant under a contract with any public entity and may not transact business with any public entity in excess of the threshold amount provided in Section 287.017, for CATEGORY TWO for a period of 36 months from the date of being placed on the convicted vendor list."

7. CITY OF KEY WEST LICENSE REQUIRED

Contractor is required to have a Certified or registered Electrical Contractors City of Key West license and a Certified or Registered General Contractors City of Key West Business Tax Receipt.

8. ANTI-KICKBACK AFFIDAVIT

The Bidder shall submit a signed and notarized Anti-Kickback Affidavit with Bid on the form provided herein.

©COPYRIGHT 2016 CH2M HILL

9. FLORIDA TRENCH SAFETY ACT

The Bidders attention is directed to the enactment of the Florida Trench Safety Act which incorporates OSHA Standards 29CFRs 1926.650, Subpart P, as the state's trench excavation safety standards. The Bidder shall list separately, in the Bid, the cost of compliance with these standards on a linear footage basis and the method of compliance. The Bidder shall determine if special shoring requirements are needed. Special shoring shall be identified in the Bid. The successful Bidder is fully responsible for the design of the trench safety system and the compliance with the applicable standards for the project.

G. STATE AND LOCAL SALES AND USE TAXES

Unless the Supplementary Conditions contains a statement that the Owner is exempt from state sales tax on materials incorporated into the work due to the qualification of the work under this Contract, all state and local sales and use taxes, as required by the laws and statutes of the state and its political subdivisions, shall be paid by the Contractor. Prices quoted in the Bid shall include all nonexempt sales and use taxes, unless provision is made in the Bid form to separately itemize the tax.

H. SUBMISSION OF PROPOSALS

All Bids must be submitted not later than the time prescribed, at the place, and in the manner set forth in the Invitation to Bid. Bids must be made on the Bid forms provided herewith. The Bidder shall **SUBMIT ONE (1) ORIGINAL, AND TWO (2) ELECTRONIC COPIES ON USB DRIVES WITH A SINGLE PDF FILE OF THE FULL PROPOSAL** and all required bonds, attachments, and forms.

Each Bid must be submitted in two sealed envelope one within the other, so marked as to indicate the Bidder's name and its contents without being opened, and addressed in conformance with the instructions in the Invitation to Bid.

I. MODIFICATION OR WITHDRAWAL OF PROPOSALS

Prior to the time and date designated for receipt of Bids, any Bid submitted may be withdrawn by notice to the party receiving Bids at the place designated for receipt of Bids. Such notice shall be in writing over the signature of the Bidder or by telegram. If by telegram, written confirmation over the signature of the Bidder shall be mailed and postmarked on or before the date and time set for receipt of Bids. No Bid may be withdrawn after the time scheduled for opening of Bids, unless the time specified in paragraph Award of Contract of these Instructions to Bidders shall have elapsed.

©COPYRIGHT 2016 CH2M HILL

J. BID SECURITY

Bids must be accompanied by cash, a certified check, or cashier's check drawn on a bank in good standing, or a bid bond issued by a Surety authorized to issue such bonds in the state where the work is located, in the amount of 5 percent of the total amount of the Bid submitted. This bid security shall be given as a guarantee that the Bidder will not withdraw his Bid for a period of 90 days after bid opening, and that if awarded the Contract, the successful Bidder will execute the attached Contract and furnish properly executed Performance and Payment Bonds, each in the full amount of the Contract price within the time specified.

The Attorney-in-Fact who executes this bond in behalf of the Surety must attach a notarized copy of his power-of-attorney as evidence of his authority to bind the Surety on the date of execution of the bond. Where State Statute requires, certification by a resident agent shall also be provided.

If the Bidder elects to furnish a Bid Bond, he shall use the Bid Bond form bound herewith, or one conforming substantially thereto in form and content.

K. RETURN OF BID SECURITY

Within 15 days after the award of the Contract, the Owner will return the bid securities to all Bidders who’s Bids are not to be further considered in awarding the Contract. Retained bid securities will be held until the Contract has been finally executed, after which all bid securities, other than Bidders' bonds and any guarantees which have been forfeited, will be returned to the respective Bidders whose Bids they accompanied.

L. AWARD OF CONTRACT

The award will be made under one Contract by the Owner on the basis of the Bid from the lowest, responsive, responsible Bidder. The Owner may award entire Bid or selected line items based on the City’s best interest and available funds at time of Award.

Within 90 calendar days after the opening of Bids, the Owner will accept one of the Bids or will act in accordance with the following paragraphs. The acceptance of the Bid will be by written notice of award, mailed to the office designated in the Bid, or delivered to the Bidder's representative. In the event of failure of the lowest responsive, responsible Bidder to sign the Contract and provide an acceptable Performance Bond, Payment Bond, insurance certificate(s) and evidence of holding required licenses and certificates, the Owner may award the Contract to the next lowest responsive, responsible Bidder. Such award, if made, will be made within 90 days after the opening of Bids. Bidders will guarantee their bid price(s) for up to 90 calendar days after bid opening.

©COPYRIGHT 2016 CH2M HILL

The Owner reserves the right to accept or reject any or all Bids, and to waive any informalities and irregularities in said Bids.

M. EXECUTION OF CONTRACT

The successful Bidder shall, within 10 working days after receiving Notice of Award, sign and deliver to the Owner a Contract in the form hereto attached, together with the insurance certificate examples of the bonds as required in the Contract Documents and evidence of holding required licenses and certificates. Within 10 working days after receiving the signed Contract from the successful Bidder, the Owner's authorized agent will sign the Contract. Signature by both parties constitutes execution of the Contract.

N. CONTRACT BONDS

1. PERFORMANCE AND PAYMENT BONDS

The successful Bidder shall file with the Owner, at the time of delivery of the signed Contract, a Performance Bond and Payment Bond on the form bound herewith, each in the full amount of the Contract price in accordance with the requirements of Florida Statutes Section 255.05 or 713.23, as applicable, as security for the faithful performance of the Contract and the payment of all persons supplying labor and materials for the construction of the work, and to cover all guarantees against defective workmanship or materials, or both, during the warranty period following the date of final acceptance of the work by the Owner. The Surety furnishing this bond shall have a sound financial standing and a record of service satisfactory to the Owner, shall be authorized to do business in the State of Florida, and shall be listed on the current U.S. Department of Treasury Circular Number 570, or amendments thereto in the Federal Register, of acceptable Sureties for federal projects.

2. POWER-OF-ATTORNEY

The Attorney-in-Fact (Resident Agent in state which work is being performed) who executes this Performance and Payment Bond in behalf of the Surety must attach a notarized copy of his power-of-attorney as evidence of his authority to bind the Surety on the date of execution of the bond.

All Contracts, Performance and Payment Bonds, and respective powers-of-attorney will have the same date.

©COPYRIGHT 2016 CH2M HILL

O. FAILURE TO EXECUTE CONTRACT AND FURNISH BOND

The Bidder who has a Contract awarded to him and who fails to promptly and properly execute the Contract or furnish the required Bonds shall forfeit the bid security that accompanied his bid, and the bid security shall be retained as liquidated damages by the Owner, and it is agreed that this said sum is a fair estimate of the amount of damages the Owner will sustain in case the Bidder fails to enter into a Contract or furnish the required Bonds. Bid security deposited in the form of cash, a certified check, or cashier's check shall be subject to the same requirement as a Bid Bond.

P. TIME OF COMPLETION

The time of completion of the work to be performed under this Contract is the essence of the Contract. Delays and extensions of time may be allowed in accordance with the provisions stated in the General Conditions. The time allowed for the completion of the work authorized is stated in the Bid.

Q. LOCAL PREFERENCE

City of Key West Policy of Local Preference is applied to bids submitted by qualified local business, per City Code Section 02-798.

R. PRE-BID CONFERENCE

A Pre-bid Conference will be held as indicated in “Invitation to Bid”. The City of Key West encourages attendance by all prospective bidders. The purpose of the meeting will be to discuss particular requirements and answer questions of the prospective bidders relative to completing this project.

END OF SECTION

©COPYRIGHT 2016 CH2M HILL

NOTE TO BIDDER: Use preferably BLACK ink for completing this Bid form.

BID FORM

To: The City of Key West

Address: 3140 Flagler Avenue, Key West, Florida 33040

Project Title: Repairs and Improvements at Zero Duval and Mallory Square

CH2M HILL Project No.: 439197

City of Key West Project No.: EN-1002

Bidder's person to contact for additional information on this Bid:

Company: _____

Name: _____

Telephone: _____

Email: _____

BIDDER'S DECLARATION AND UNDERSTANDING

The undersigned, hereinafter called the Bidder, declares that the only persons or parties interested in this Bid are those named herein, that this Bid is, in all respects, fair and without fraud, that it is made without collusion with any official of the Owner, and that the Bid is made without any connection or collusion with any person submitting another Bid on this Contract.

The Bidder further declares that he has carefully examined the Contract Documents for the construction of the project, that he has personally inspected the site, that he has satisfied himself as to the quantities involved, including materials and equipment, and conditions of work involved, including the fact that the description of the quantities of work and materials, as included herein, is brief and is intended only to indicate the general nature of the Work and to identify the said quantities with the detailed requirements of the Contract Documents, and that this Bid is made according to the provisions and under the terms of the Contract Documents, which Documents are hereby made a part of this Bid.

©COPYRIGHT 2016 CH2M HILL

The Bidder further agrees, as evidenced by signing the Bid, which if awarded a Contract, the Florida Trench Safety Act and applicable trench safety standards will be complied with.

CONTRACT EXECUTION AND BONDS

The Bidder agrees that if this Bid is accepted, he will, within 10 days, not including Sundays and legal holidays, after Notice of Award, sign the Contract in the form annexed hereto, and will at that time, deliver to the Owner examples of the Performance Bond and Payment Bond required herein, and evidence of holding required licenses and certificates, and will, to the extent of his Bid, furnish all machinery, tools, apparatus, and other means of construction and do the Work and furnish all the materials necessary to complete all work as specified or indicated in the Contract Documents.

CERTIFICATES OF INSURANCE

Bidder agrees to furnish the Owner, before commencing the Work under this Contract, the certificates of insurance as specified in these Documents.

START OF CONSTRUCTION AND CONTRACT COMPLETION TIMES

The Bidder agrees to begin work within 10 calendar days after the date of the Notice to Proceed (April 15, 2016) when the Contract Times commence to run as provided in paragraph 2.03.A of the General Conditions. Work will be completed and ready for final payment and acceptance in accordance with paragraph 14.07 of the General Conditions on or before November 30, 2016.

LIQUIDATED DAMAGES

In the event the Bidder is awarded the Contract, Owner and Bidder recognize that time is of the essence of this Agreement and that Owner will suffer financial loss if the Work is not completed within the times specified in paragraph Start of Construction and Contract Completion Times above, plus any extensions thereof allowed in accordance with Article 12 of the General Conditions. Owner and Bidder also recognize the delays, expense, and difficulties involved in proving in a legal or other dispute resolution proceeding the actual loss suffered by Owner if the Work is not completed on time. Accordingly, instead of requiring any such proof, Owner and Bidder agree that as liquidated damages for delay (but not as a penalty) Bidder shall pay Owner $3,000.00 per day for each day that expires after the time specified for final completion.

Owner will recover such liquidated damages by deducting the amount owed from the final payment or any retainage held by Owner.

©COPYRIGHT 2016 CH2M HILL

ADDENDA

The Bidder hereby acknowledges that he has received Addenda No's. _____, _____, ____, _____, ____, (Bidder shall insert No. of each Addendum received) and agrees that all addenda issued are hereby made part of the Contract Documents, and the Bidder further agrees that his Bid(s) includes all impacts resulting from said addenda.

SALES AND USE TAXES

The Bidder agrees that all federal, state, and local sales and use taxes are included in the stated Bid Prices for the Work. Cash allowances DO NOT include any sales and use tax. Equipment allowance includes taxes as shown in Equipment Suppliers' Bid.

PUBLIC ENTITY CRIMES

"A person or affiliate who has been placed on the convicted vendor list following a conviction for a public entity crime may not submit a bid on a contract to provide any goods or services to a public entity, may not submit a bid on a contract with a public entity for the construction or repair of a public building or public work, may not submit bids on leases of real property to a public entity, may not be awarded or perform work as a contractor, supplier, subcontractor, or consultant under a contract with any public entity and may not transact business with any public entity in excess of the threshold amount provided in Section 287.017, for CATEGORY TWO for a period of 36 months from the date of being placed on the convicted vendor list."

LUMP SUM WORK

The Bidder further proposes to accept as full payment for the Work proposed herein the amounts computed under the provisions of the Contract Documents. For lump sum bid items, it is expressly understood that the amounts are independent of the exact quantities involved. The Bidder agrees that the amounts for lump sum work represent a true measure of labor and materials required to perform the Work, including all allowances for overhead and profit for each type of work called for in these Contract Documents. The amounts shall be shown in both words and figures. In case of discrepancy, the amount shown in words shall govern.

UNFORESEEN CONDITION ALLOWANCE

Bidder further agrees that the amount shown is an estimated amount to be included in the Total Base Bid for unforeseen conditions and conflicts. Bidder further acknowledges that payment will be based on actual costs as determined in conformance with the Contract Documents and as authorized by Change Order. The Owner will negotiate with the Contractor how each Allowance will be spent prior to performing the work.

©COPYRIGHT 2016 CH2M HILL

CONCRETE AND UTILITY ALLOWANCE

Bidder further agrees that the amount shown is an estimated amount to be included in the Total Base Bid for concrete and utility coordination. Bidder further acknowledges that payment will be based on actual costs as determined in conformance with the Contract Documents and as authorized by Change Order. The Owner will negotiate with the Contractor how each Contingency Allowance will be spent prior to performing the work.

PERMIT ALLOWANCE

Bidder further acknowledges that this amount shown is an estimated amount to be included in the Total Base Bid for the Permit required by the City of Key West and any Regulatory Agency Permit(s). Bidder acknowledges that payment will be based on actual cost for the permit(s).

Breakdown of the lump sum bid as provided below is in accordance with the following schedule:

LUMP SUM BID SCHEDULE		
Item No.	**Description**	**Lump Sum Item Price**
A.	Zero Duval	
1.	Mobilization	$_____
2.	Demolition	$_____
3.	Wooden Deck Demolition/ Reconstruction	$_____
4.	Sheet Piles	$_____
5.	Tie Backs and Walers	$_____
6.	Concrete Cap	$_____
7.	Backfill/Flowable Fill	$_____
8.	Drainage Pipe Extension and Repair	$_____
9.	Misc. General	$_____
10.	Project Close Out / Demobilization	$_____
	SUBTOTAL 'A'	**$_____**
B.	Mallory	
1.	Mobilization	$_____

©COPYRIGHT 2016 CH2M HILL

LUMP SUM BID SCHEDULE		
Item No.	**Description**	**Lump Sum Item Price**
2.	Demolition	$_____
3.	Piling	$_____
4.	Concrete	$_____
5.	Fenders	$_____
6.	Misc. General	$_____
7.	Project Close Out / Demobilization	$_____
	SUBTOTAL 'B'	**$_____**
C.	Unforeseen Condition Allowance	$ 125,000
D.	Permit Allowance	$ 40,000
E.	Concrete and Utility Allowance	$ 75,000
	Total Lump Sum Bid (A.-E.)	**$_____**

The Bidder agrees to accept as full payment for the Work proposed under this Project, as herein specified and as shown on the Drawings, the following Total Base Bid amount:

_____ Dollars and _____cents.
(Amount written in words has precedence)

Basis of Award is Total Lump Sum Bid Amount.

©COPYRIGHT 2016 CH2M HILL

SUBCONTRACTORS

The Bidder further proposes that the following subcontracting firms or businesses will be awarded subcontracts for the following portions of the Work in the event that the Bidder is awarded the Contract:

_____
Name

_____ _____ _____
Street City State Zip

_____
Name

_____ _____ _____
Street City State Zip

_____
Name

_____ _____ _____
Street City State Zip

_____
Name

_____ _____ _____
Street City State Zip

Surety

_____whose address is

_____ _____ _____
Street City State Zip

©COPYRIGHT 2016 CH2M HILL

Bidder

The name of the Bidder submitting this Bid is _____

_____ doing business at

_____ _____ _____

Street City State Zip

which is the address to which all communications concerned with this Bid and with the Contract shall be sent.

The names of the principal officers of the corporation submitting this Bid, or of the partnership, or of all persons interested in this Bid as principals are as follows:

_____ _____

_____ _____

_____ _____

If Sole Proprietor or Partnership

IN WITNESS hereto the undersigned has set his (its) hand this ___ day of _____ 20____.

_____

Signature of Bidder

_____

Title

©COPYRIGHT 2016 CH2M HILL

If Corporation

IN WITNESS WHEREOF the undersigned corporation has caused this instrument to be executed and its seal affixed by its duly authorized officers this ___ day of _____ 20___.

(SEAL)

_____
Name of Corporation

By: _____

Title: _____

Attest: _____
Secretary

END OF SECTION

©COPYRIGHT 2016 CH2M HILL

FLORIDA BID BOND

BOND NO._____

AMOUNT: $_____

KNOW ALL MEN BY THESE PRESENTS, that _____

_____

hereinafter called the Contractor (Principal), and _____

_____

a corporation duly organized and existing under and by virtue of the laws of the State of Florida, hereinafter called the Surety, and authorized to transact business within the State of Florida, as Surety, are held and firmly bound unto The City of Key West as Owner

(Obligee), in the sum of:_____

_____DOLLARS ($_____), for the payment for which we bind ourselves, our heirs, executors, administrators, successors, and assigns, jointly and severally, firmly by these presents.

THE CONDITION OF THIS BOND IS SUCH THAT:

WHEREAS, the Principal is herewith submitting his or its Bid Proposal for Repairs and Improvements at Zero Duval and Mallory Square, Key West, Florida, said Bid Proposal, by reference thereto, being hereby made a part hereof.

WHEREAS, the Principal contemplates submitting or has submitted a bid to the Obligee for the furnishing of all labor, materials (except those to be specifically furnished by the Owner), equipment, machinery, tools, apparatus, means of transportation for, and the performance of the work covered in the Proposal and the detailed Drawings and Specifications, entitled:

REPAIRS AND IMPROVEMENTS AT ZERO DUVAL AND MALLORY SQUARE

WHEREAS, it was a condition precedent to the submission of said bid that a cashier's check, certified check, or bid bond in the amount of 5 percent of the base bid be submitted with said bid as a guarantee that the Bidder would, if awarded the Contract, enter into a written Contract with the Owner for the performance of said Contract, within 10 working days after written notice having been given of the award of the Contract.

©COPYRIGHT 2016 CH2M HILL

NOW, THEREFORE, the conditions of this obligation are such that if the Principal within 10 consecutive calendar days after written notice of such acceptance, enters into a written Contract with the Obligee and furnishes the Performance and Payment Bonds, each in an amount equal to 100 percent of the awarded base bid, satisfactory to the Owner, then this obligation shall be void; otherwise the sum herein stated shall be due and payable to the Obligee and the Surety herein agrees to pay said sum immediately upon demand of the Obligee in good and lawful money of the United States of America, as liquidated damages for failure thereof of said Principal.

Signed and sealed this _____ day of _____, 20____.

_____
Principal

By: _____

_____
Surety

By: _____
Attorney-In-Fact

END OF SECTION

©COPYRIGHT 2016 CH2M HILL

ANTI-KICKBACK AFFIDAVIT

STATE OF FLORIDA)
: SS
COUNTY OF MONROE)

I, the undersigned hereby duly sworn, depose and say that no portion of the sum herein bid (Repairs and Improvements at Zero Duval and Mallory Square) will be paid to any employees of the City of Key West as a commission, kickback, reward or gift, directly or indirectly by me or any member of my firm or by an officer of the corporation.

By: _____

_____

Sworn and subscribed before me this
_____day of _____, 20___

_____
NOTARY PUBLIC, State of Florida
at Large

My Commission Expires: _____

END OF SECTION

©COPYRIGHT 2016 CH2M HILL

©COPYRIGHT 2016 CH2M HILL

SWORN STATEMENT UNDER SECTION 287.133(3)(A)
FLORIDA STATUTES, ON PUBLIC ENTITY CRIMES

THIS FORM MUST BE SIGNED IN THE PRESENCE OF A NOTARY PUBLIC OR OTHER OFFICER AUTHORIZED TO ADMINISTER OATHS.

1. This sworn statement is submitted with Bid or Proposal for Repairs and Improvements at Zero Duval and Mallory Square, City of Key West, Florida.

2. This sworn statement is submitted by _____
(name of entity submitting sworn statement)

whose business address is _____

_____and (if applicable) its Federal Employer

Identification Number (FEIN) is _____

(If the entity has no FEIN, include the Social Security Number of the individual signing this

sworn statement _____

3. My name is _____
(please print name of individual signing)

and my relationship to the entity named above is _____

4. I understand that a "public entity crime" as defined in Paragraph 287.133(1)(g), Florida Statutes, means a violation of any state or federal law by a person with respect to and directly related to the transaction of business with any public entity or with an agency or political subdivision of any other state or with the United States, including but not limited to, any bid or contract for goods or services to be provided to any public or an agency or political subdivision of any other state or of the United States and involving antitrust, fraud, theft, bribery, collusion, racketeering, conspiracy, material misrepresentation.

5. I understand that "convicted" or "conviction" as defined in Paragraph 287.133(1)(b), Florida Statutes, means a finding of guilt or a conviction of a public entity crime, with or without an adjudication guilt, in any federal or state trial court of record relating to charges brought by indictment information after July 1, 1989, as a result of a jury verdict, nonjury trial, or entry of a plea of guilty or nolo contendere.

6. I understand that an "affiliate" as defined in Paragraph 287.133(1)(a), Florida Statutes, means

    1. A predecessor or successor of a person convicted of a public entity crime; or

    2. An entity under the control of any natural person who is active in the management of the entity and who has been convicted of a public entity crime. The term "affiliate" includes those officers, directors, executives, partners, shareholders, employees, members, and agents who are active in the management of an affiliate. The ownership by one person of shares constituting controlling interest in another person, or a pooling of equipment or income among persons when not for fair market value under an arm's length agreement, shall be a prima facie case that one person controls another person. A person who knowingly enters into a joint venture with a person who has been convicted of a public entity crime in Florida during the preceding 36 months shall be considered an affiliate.

©COPYRIGHT 2016 CH2M HILL

7. I understand that a "person" as defined in Paragraph 287.133(1)(8), Florida Statutes, means any natural person or entity organized under the laws of any state or of the United States with the legal power to enter into a binding contract and which bids or applies to bid on contracts for the provision of goods or services let by a public entity, or which otherwise transacts or applies to transact business with public entity. The term "person" includes those officers, directors, executives, partners, shareholders, employees, members, and agents who are active in management of an entity.

8. Based on information and belief, the statement which I have marked below is true in relation to the entity submitting this sworn statement. (Please indicate which statement applies).

____Neither the entity submitting this sworn statement, nor any officers, directors, executives, partners, shareholders, employees, members, or agents who are active in management of the entity, nor any affiliate of the entity have been charged with and convicted of a public entity crime subsequent to July 1, 1989, AND (Please indicate which additional statement applies.)

_____There has been a proceeding concerning the conviction before a hearing of the State of Florida, Division of Administrative Hearings. The final order entered by the hearing officer did not place the person or affiliate on the convicted vendor list. (Please attach a copy of the final order.)

_____The person or affiliate was placed on the convicted vendor list. There has been a subsequent proceeding before a hearing officer of the State of Florida, Division of Administrative Hearings. The final order entered by the hearing officer determined that it was in the public interest to remove the person or affiliate from the convicted vendor list. (Please attach a copy of the final order.)

_____The person or affiliate has not been put on the convicted vendor list. (Please describe any action taken by or pending with the Department of General Services.)

_____
(signature)

_____
(date)

STATE OF_____

COUNTY OF_____

PERSONALLY APPEARED BEFORE ME, the undersigned authority,

_____who, after first being sworn by me, affixed his/her
(name of individual signing)

signature in the space provided above on this ____ of _____, 20____.

My commission expires:

_____
NOTARY PUBLIC

©COPYRIGHT 2016 CH2M HILL

CITY OF KEY WEST INDEMNIFICATION FORM

To the fullest extent permitted by law, the CONTRACTOR expressly agrees to indemnify and hold harmless the City of Key West, their officers, directors, agents and employees *(herein called the "indemnitees") from liabilities, damages, losses and costs, including but not limited to, reasonable attorney's fees and court costs, such legal expenses to include costs incurred in establishing the indemnification and other rights agreed to in this Paragraph, to persons or property, to the extent caused by the negligence, recklessness, or intentional wrongful misconduct of the CONTRACTOR, its Subcontractors or persons employed or utilized by them in the performance of the Contract. Claims by indemnitees for indemnification shall be limited to the amount of CONTRACTOR's insurance or $1 million per occurrence, whichever is greater. The parties acknowledge that the amount of the indemnity required hereunder bears a reasonable commercial relationship to the Contract and it is part of the project specifications or the bid documents, if any.

The indemnification obligations under the Contract shall not be restricted in any way by any limitation on the amount or type of damages, compensation, or benefits payable by or for the CONTRACTOR under Workers' Compensation acts, disability benefits acts, or other employee benefits acts, and shall extend to and include any actions brought by or in the name of any employee of the CONTRACTOR or of any third party to whom CONTRACTOR may subcontract a part or all of the Work. This indemnification shall continue beyond the date of completion of the work.

CONTRACTOR: _____ SEAL:

_____
Address

_____
Signature

_____
Print Name

_____
Title

DATE: _____

©COPYRIGHT 2016 CH2M HILL

©COPYRIGHT 2016 CH2M HILL

SECTION 00 43 19
EQUAL BENEFITS FOR DOMESTIC PARTNERS AFFIDAVIT

STATE OF FLORIDA)
: SS
COUNTY OF _____)

I, the undersigned hereby duly sworn, depose and say that the firm of _____ provides benefits to domestic partners of its employees on the same basis as it provides benefits to employees' spouses per City of Key West Ordinance Sec. 2-799.

By: _____

Sworn and subscribed before me this

_____ day of _____, 20___.

_____
NOTARY PUBLIC, State of Florida at Large

My Commission Expires: _____

©COPYRIGHT 2016 CH2M HILL

City Ordinance Sec. 2-799
Requirements for City Contractors to Provide Equal Benefits for Domestic Partners

(a) Definitions. For purposes of this section only, the following definitions shall apply:

(1) ***Benefits*** means the following plan, program or policy provided or offered by a contractor to its employees as part of the employer's total compensation package: sick leave, bereavement leave, family medical leave, and health benefits.

(2) ***Bid*** shall mean a competitive bid procedure established by the city through the issuance of an invitation to bid, request for proposals, request for qualifications, or request for letters of interest.

(3) ***Cash equivalent*** means the amount of money paid to an employee with a domestic partner in lieu of providing benefits to the employee's domestic partner. The cash equivalent is equal to the employer's direct expense of providing benefits to an employee for his or her spouse.

The cash equivalents of the following benefits apply:

a. For bereavement leave, cash payment for the number of days that would be allowed as paid time off for the death of a spouse. Cash payment would be in the form of the wages of the domestic partner employee for the number of days allowed.

b. For health benefits, the cost to the contractor of the contractor's share of the single monthly premiums that are being paid for the domestic partner employee, to be paid on a regular basis while the domestic partner employee maintains such insurance in force for himself or herself.

c. For family medical leave, cash payment for the number of days that would be allowed as time off for an employee to care for a spouse who has a serious health condition. Cash payment would be in the form of the wages of the domestic partner employee for the number of days allowed.

(4) ***Contract*** means any written agreement, purchase order, standing order or similar instrument entered into pursuant to the award of a bid whereby the city is committed to expend or does expend funds in return for work, labor, professional services, consulting services, supplies, equipment, materials, construction, construction related services or any combination of the foregoing.

(5) ***Contractor*** means any person or persons, sole proprietorship, partnership, joint venture, corporation, or other form of doing business, that is awarded a bid and enters into a covered contract with the city, and which maintains five (5) or more full-time employees.

(6) ***Covered contract*** means a contract between the city and a contractor awarded subsequent to the date when this section becomes effective valued at over twenty thousand dollars ($20,000).

(7) ***Domestic partner*** shall mean any two adults of the same or different sex, who have registered as domestic partners with a governmental body pursuant to state or local law authorizing such registration, or with an internal registry maintained

©COPYRIGHT 2016 CH2M HILL

by the employer of at least one of the domestic partners. A contractor may institute an internal registry to allow for the provision of equal benefits to employees with domestic partner who do not register their partnerships pursuant to a governmental body authorizing such registration, or who are located in a jurisdiction where no such governmental domestic partnership registry exists. A contractor that institutes such registry shall not impose criteria for registration that are more stringent than those required for domestic partnership registration by the City of Key West pursuant to Chapter 38, Article V of the Key West Code of Ordinances.

(8) ***Equal benefits*** mean the equality of benefits between employees with spouses and employees with domestic partners, and/or between spouses of employees and domestic partners of employees.

(b) Equal benefits requirements.

(1) Except where otherwise exempt or prohibited by law, a Contractor awarded a covered contract pursuant to a bid process shall provide benefits to domestic partners of its employees on the same basis as it provides benefits to employees' spouses.

(2) All bid requests for covered contracts which are issued on or after the effective date of this section shall include the requirement to provide equal benefits in the procurement specifications in accordance with this section.

(3) The city shall not enter into any covered contract unless the contractor certifies that such contractor does not discriminate in the provision of benefits between employees with domestic partners and employees with spouses and/or between the domestic partners and spouses of such employees.

(4) Such certification shall be in writing and shall be signed by an authorized officer of the contractor and delivered, along with a description of the contractor's employee benefits plan, to the city's procurement director prior to entering into such covered contract.

(5) The city manager or his/her designee shall reject a contractor's certification of compliance if he/she determines that such contractor discriminates in the provision of benefits or if the city manager or designee determines that the certification was created, or is being used for the purpose of evading the requirements of this section.

(6) The contractor shall provide the city manager or his/her designee, access to its records for the purpose of audits and/or investigations to ascertain compliance with the provisions of this section, and upon request shall provide evidence that the contractor is in compliance with the provisions of this section upon each new bid, contract renewal, or when the city manager has received a complaint or has reason to believe the contractor may not be in compliance with the provisions of this section. This shall include but not be limited to providing the city manager or his/her designee with certified copies of all of the contractor's records pertaining to its benefits policies and its employment policies and practices.

©COPYRIGHT 2016 CH2M HILL

(7) The contractor may not set up or use its contracting entity for the purpose of evading the requirements imposed by this section.

(c) Mandatory contract provisions pertaining to equal benefits. Unless otherwise exempt, every covered contract shall contain language that obligates the contractor to comply with the applicable provisions of this section. The language shall include provisions for the following:

(1) During the performance of the covered contract, the contractor certifies and represents that it will comply with this section.
(2) The failure of the contractor to comply with this section will be deemed to be a material breach of the covered contract.
(3) If the contractor fails to comply with this section, the city may terminate the covered contract and all monies due or to become due under the covered contract may be retained by the city. The city may also pursue any and all other remedies at law or in equity for any breach.
(4) If the city manager or his designee determines that a contractor has set up or used its contracting entity for the purpose of evading the requirements of this section, the city may terminate the covered contract.

(d) Enforcement. If the contractor fails to comply with the provisions of this section:

(1) The failure to comply may be deemed to be a material breach of the covered contract; or
(2) The city may terminate the covered contract; or
(3) Monies due or to become due under the covered contract may be retained by the city until compliance is achieved; or
(4) The city may also pursue any and all other remedies at law or in equity for any breach;
(5) Failure to comply with this section may also subject contractor to the procedures set forth in Division 5 of this article, entitled "Debarment of contractors from city work."

(e) Exceptions and waivers.

The provisions of this section shall not apply where:

(1) The contractor does not provide benefits to employees' spouses.
(2) The contractor is a religious organization, association, society or any non-profit charitable or educational institution or organization operated, supervised or controlled by or in conjunction with a religious organization, association or society.
(3) The contractor is a governmental entity.
(4) The sale or lease of city property.
(5) The provision of this section would violate grant requirement, the laws, rules or regulations of federal or state law (for example, The acquisition services procured

©COPYRIGHT 2016 CH2M HILL

pursuant to Chapter 287.055, Florida Statutes known as the "Consultants' Competitive Negotiation Act").

(6) Provided that the contractor does not discriminate in the provision of benefits, a contractor may also comply with this section by providing an employee with the cash equivalent of such benefits, if the city manager or his/her designee determines that either:

a. The contractor has made a reasonable yet unsuccessful effort to provide equal benefits. The contractor shall provide the city manager or his/her designee with sufficient proof of such inability to provide such benefit or benefits which shall include the measures taken to provide such benefits or benefits and the cash equivalent proposed, along with its certificate of compliance, as is required under this section.

(7) The city commission waives compliance of this section in the best interest of the city, including but not limited to the following circumstances:

a. The covered contract is necessary to respond to an emergency.
b. Where only one bid response is received.
c. Where more than one bid response is received, but the bids demonstrate that none of the bidders can comply with the requirements of this section.

(f) City's authority to cancel contract. Nothing in this section shall be construed to limit the city's authority to cancel or terminate a contract, deny or withdraw approval to perform a subcontract or provide supplies, issue a non-responsibility finding, issue a non-responsiveness finding, deny a person or entity prequalification, or otherwise deny a person or entity city business.

(g) Timing of application. This section shall be applicable only to covered contracts awarded pursuant to bids which are after the date when this section becomes effective.

©COPYRIGHT 2016 CH2M HILL

©COPYRIGHT 2016 CH2M HILL

CITY OF KEY WEST BUSINESS LICENSE TAX RECEIPT

1. A City of Key West Business License Tax Receipt is required for this Project. Contractor must be general contractor or building contractor or engineering contractor.

2. A City of Key West Business License Tax Receipt also is required for sub-contracting.

3. A Business License Tax Application can be found on the City's web site.

http://www.keywestcity.com/egov/docs/1162843921181.htm

©COPYRIGHT 2016 CH2M HILL

Business License Tax Application

City of Key West
City Hall Annex
PO Box 1409
Key West, FL 33041

Date Applied _____

License # _____

Phone 305-809-3955
Fax 305-809-3978

Business Type: _____

Business Name: _____

Business Location: _____

Business Owner: _____

State Licensed Qualifier (if applicable): _____

Mailing Address: _____

EIN / SS # _____ Phone # _____

_____ _____ _____
Applicant name (printed) Applicant signature Date

State of Florida
County of Monroe
The foregoing instrument was acknowledged before me this _____ day of _____, 20___, by _____.

_____ (stamp or seal). Personally known ____
Signature of Notary Public Produced id _____.

____ Sales Tax number 3106 Flagler Ave 292-6735 City utility acct _____
____ Commercial garbage Waste Mgmt 296-8297 _____
____ Lease or deed
____ State License DBPR 850-487-1395 / Dept Ag 305-470-6900
____ Home occupation application
____ Fictitious Name registration Previous use _____
____ Corporate or LLC registration
____ Liability / Worker's Comp Zoning _____
____ Fire Inspector 292-8179
____ CO / final inspection on any permits Category _____ Fee $_____
____ Monroe County or local licensing

Licensed in accordance with Chapter 66, Key West Code of Ordinances

_____ Approved _____ Denied / Reason _____

_____ _____
Licensing Official Date

©COPYRIGHT 2016 CH2M HILL

SECTION 00 43 21
CONE OF SILENCE AFFIDAVIT

STATE OF _____)
: SS
COUNTY OF _____)

I the undersigned hereby duly sworn depose and say that all owner(s), partners, officers, directors, employees and agents representing the firm of _____ have read and understand the limitations and procedures regarding communications concerning City of Key West issued competitive solicitations pursuant to City of Key West Ordinance Section 2-773 Cone of Silence (attached).

Sworn and subscribed before me this

_____ day of _____, 20___.

_____
NOTARY PUBLIC, State of _____ at Large

My Commission Expires: _____

©COPYRIGHT 2016 CH2M HILL

Sec. 2-773. Cone of Silence

(a) Definitions. For purposes of this section, reference to one gender shall include the other, use of the plural shall include the singular, and use of the singular shall include the plural. The following definitions apply unless the context in which the word or phrase is used requires a different definition:

1) *Competitive Solicitation* means a formal process by the City of Key West relating to the acquisition of goods or services, which process is intended to provide an equal and open opportunity to qualified persons and entities to be selected to provide the goods or services. Completive Solicitation shall include request for proposals ("RFP"), request for qualifications ("RFQ"), request for letters of interest ("RFLI"), invitation to bid ("ITB") or any other advertised solicitation.

2) *Cone of Silence* means a period of time during which there is a prohibition on communication regarding a particular Competitive Solicitation.

3) *Evaluation or Selection Committee* means a group of persons appointed or designated by the City to evaluate, rank, select, or make a recommendation regarding a Vendor or the Vendor's response to the Competitive Solicitation. A member of such a committee shall be deemed a city official for the purposes of subsection (c) below.

4) *Vendor* means a person or entity that has entered into or that desires to enter into a contract with the City of Key West or that seeks an award from the City to provide goods, perform a service, render an opinion or advice, or make a recommendation related to a Competitive Solicitation for compensation or other consideration.

5) *Vendor's Representative* means an owner, individual, employee, partner, officer, or member of the board of directors of a Vendor, or a consultant, lobbyist, or actual or potential subcontractor or sub consultant who acts at the behest of a Vendor in communicating regarding a Competitive Solicitation.

(b) Prohibited Communications: A Cone of Silence shall be in effect during the course of a Competitive Solicitation and prohibit:

1) Any communication regarding a particular Competitive Solicitation between a potential Vendor or Vendor's Representative and the City's administrative staff including, but not limited to, the city manager and his or her staff;

2) Any communication regarding a particular Competitive Solicitation between a potential Vendor or Vendor's Representative and the Mayor, City Commissioners, or their respective staff;

©COPYRIGHT 2016 CH2M HILL

3) Any communication regarding a particular Competitive Solicitation between a potential Vendor or Vendor's Representative and any member of a City evaluation and/or selection committee therefore; and
4) Any communication regarding a particular Competitive Solicitation between the Mayor, City Commissioners, or their respective staff, and a member of a City evaluation and/or selection committee therefore.

(c) Permitted Communications: Notwithstanding the foregoing, nothing contained herein shall prohibit:

1) Communication between members of the public who are not Vendors or a Vendor's representative and any city employee, official or member of the City Commission;

2) Communications in writing at any time with any city employee, official or member of the City Commission, unless specifically prohibited by the applicable Competitive Solicitation.

(A) However, any written communication must be filed with the City Clerk. Any City employee, official or member of the City Commission receiving or making any written communication must immediately file it with the City Clerk.

(B) The City Clerk shall include all written communication as part of the agenda item when publishing information related to a particular Competitive Solicitation.

3) Oral communications at duly noticed pre-bid conferences;

4) Oral presentations before publically noticed evaluation and/or selection committees;

5) Contract discussions during any duly noticed public meeting;

6) Public presentations made to the City Commission or advisory body thereof during any duly noticed public meeting;

7) Contract negotiations with city staff following the award of a Competitive Solicitation by the City Commission; or

8) Purchases exempt from the competitive process pursuant to section 2-797 of these Code of Ordinances.

(d) Procedure

1) The Cone of Silence shall be imposed upon each Competitive Solicitation at the time of Public Notice of such solicitation as provided by section 2-826 of this Code. Public notice of the Cone of Silence shall be included in the notice of the Competitive

©COPYRIGHT 2016 CH2M HILL

Solicitation. The city manager shall issue a written notice of the release of each Competitive Solicitation to the affected departments, with a copy thereof to each Commission member, and shall include in any public solicitation for goods and services a statement disclosing the requirements of this ordinance.

2) The Cone of Silence shall terminate at the time the City Commission or other authorized body makes final award or gives final approval of a contract, rejects all bids or responses to the Competitive Solicitation, or takes other action which ends the Competitive Solicitation.

3) Any City employee, official or member of the City Commission that is approached concerning a Competitive Solicitation while the Cone of Silence is in effect shall notify such individual of the prohibitions contained in this section. While the Cone of Silence is in effect, any City employee, official or member of the City Commission who is the recipient of any oral communication by a potential Vendor or Vendor's Representative in violation of this section shall create a written record of the event. The record shall indicate the date of such communication, the persons with whom such communication occurred, and a general summation of the communication.

(e) Violations/penalties and procedures.

1) A sworn complaint alleging a violation of this ordinance may be filed with the City Attorney's office. In each such instance, an initial investigation shall be performed to determine the existence of a violation. If a violation is found to exist, the penalties and process shall be as provided in section 1-15 of this Code.

2) In addition to the penalties described herein and otherwise provided by law, a violation of this ordinance shall render the Competitive Solicitation void at the discretion of the City Commission.

3) Any person who violates a provision of this section shall be prohibited from serving on a City of Key West advisory board, evaluation and/or selection committee.

4) In addition to any other penalty provided by law, violation of any provision of this ordinance by a City of Key West employee shall subject said employee to disciplinary action up to and including dismissal.

5) If a Vendor is determined to have violated the provisions of this section on two more occasions it shall constitute evidence under City Code section 2-834 that the Vendor is not properly qualified to carry out the obligations or to complete the work contemplated by any new Competitive Solicitation. The City's Purchasing Agent shall also commence any available debarment from city work proceeding that may be available upon a finding of two or more violations by a Vendor of this section.

END OF SECTION

©COPYRIGHT 2016 CH2M HILL

LOCAL VENDOR CERTIFICATION PURSUANT TO CKW ORDINANCE 09-22 SECTION 2-798

The undersigned, as a duly authorized representative of the vendor listed herein, certifies to the best of his/her knowledge and belief, that the vendor meets the definition of a "Local Business." For purposes of this section, "local business" shall mean a business which:

a. Principle address as registered with the FL Department of State located within 30 miles of the boundaries of the city, listed with the chief licensing official as having a business tax receipt with its principle address within 30 miles of the boundaries of the city for at least one year immediately prior to the issuance of the solicitation.

b. Maintains a workforce of at least 50 percent of its employees from the city or within 30 miles of its boundaries.

c. Having paid all current license taxes and any other fees due the city at least 24 hours prior to the publication of the call for bids or request for proposals.

- Not a local vendor pursuant to Ordinance 09-22 Section 2-798
- Qualifies as a local vendor pursuant to Ordinance 09-22 Section 2-798

If you qualify, please complete the following in support of the self certification & submit copies of your County and City business licenses. Failure to provide the information requested will result in denial of certification as a local business.

Business Name Phone:

Current Local Address: Fax:

(P.O Box numbers may not be used to establish status)

Length of time at this address

_____ _____

Signature of Authorized Representative Date

STATE OF_____
COUNTY OF_____

The foregoing instrument was acknowledged before me this _____day of _____, 20___.
By_____, of_____
(Name of officer or agent, title of officer or agent) Name of corporation acknowledging)
or has produced_____as identification
(type of identification)

_____
Signature of Notary

_____
Print, Type or Stamp Name of Notary

_____
Title or Rank

Return Completed form with
Supporting documents to:
City of Key West Purchasing

©COPYRIGHT 2016 CH2M HILL

©COPYRIGHT 2016 CH2M HILL

BIDDER'S CHECKLIST

(Note: The purpose of this checklist is to serve as a reminder of major items to be addressed in submitting a bid and is not intended to be all inclusive. It does not alleviate the Bidder from the responsibility of becoming familiar with all aspects of the Contract Documents and proper completion and submission of his bid.)

1.	All Contract Documents thoroughly read and understood.	[ ]
2.	All blank spaces in Proposal filled in, using black ink.	[ ]
3.	Total and unit prices added correctly.	[ ]
4.	Addenda acknowledged.	[ ]
5.	Subcontractors are named as indicated in the Proposal.	[ ]
6.	Experience record included.	[ ]
7.	Bid signed by authorized officer.	[ ]
8.	Bid Bond completed and executed, including power-of-attorney dated the same date as Bid Bond.	[ ]
9.	Bidder familiar with federal, state, and local laws, ordinances, rules and regulations affecting performance of the work.	[ ]
10.	Bidder, if successful, able to obtain and/or demonstrate possession of required licenses and certificates within (10) ten calendar days after receiving a Notice of Award.	[ ]
11.	Bid submitted shall contain Bid Form, Bid Security, Experience Record, Anti-Kickback Affidavit, Public Entity Crimes, Key West Indemnification Form, Disclosure of Lobbying Activities, Non-Collusion Declaration and Compliance, Florida Trench Safety Act Compliance, and Suspension and Debarment Certificate, Equal Benefits for Domestic Partner Affidavit, Cone of Silence Affidavit, and Local Vendor Certification.	[ ]
12.	Bid Documents submitted in sealed envelope and addressed and labeled in conformance with the instructions in the Invitation to Bid.	[ ]
13.	Bidder must provide satisfactory documentation of State Licenses.	[ ]

©COPYRIGHT 2016 CH2M HILL

©COPYRIGHT 2016 CH2M HILL

DISCLOSURE OF LOBBYING ACTIVITIES

Complete this form to disclose lobbying activities pursuant to 31 U.S.C. 1352
(See reverse for public burden disclosure.)

1. Type of Federal Action: ☐ a. contract b. grant c. cooperative agreement d. loan e. loan guarantee f. loan insurance	**2. Status of Federal Action:** ☐ a. bid/offer/application b. initial award c. post-award	**3. Report Type:** ☐ a. initial filing b. material change **For Material Change Only:** year_____ quarter_____ date of last report_____
4. Name and Address of Reporting Entity: ☐ Prime ☐ Subawardee Tier _____, *if known:* **Congressional District,** *if known:*	**5. If Reporting Entity in No. 4 is Subawardee, Enter Name and Address of Prime:** **Congressional District,** *if known:*	
6. Federal Department/Agency:	**7. Federal Program Name/Description:** CFDA Number, *if applicable:* _____	
8. Federal Action Number, *if known:*	**9. Award Amount,** *if known:* **$**	

©COPYRIGHT 2016 CH2M HILL

10. a. Name and Address of Lobbying Entity *(if individual, last name, first name, MI):*	**b. Individuals Performing Services** *(including address if different from No. 10a) (last name, first name, MI):*
(attach Continuation Sheet(s) SF-LLLA, if necessary)	
11. Information requested through this form is authorized by title 31 U.S.C. section 1352. This disclosure of lobbying activities is a material representation of fact upon which reliance was placed by the tier above when this transaction was made or entered into. This disclosure is required pursuant to 31 U.S.C. 1352. This information will be reported to Congress semi-annually and will be available for public inspection. Any person who fails to file the required disclosure shall be subject to a civil penalty of not less than $10,000 and not more than $100,000 for each such failure.	**Signature:** _____ **Print Name:** _____ **Title:** _____ **Telephone No.:** _____ **Date:** _____
Federal Use Only:	Authorized for Local Reproduction Standard Form – LLL (Rev 7 – 97)

FORM DEP 55-221 (01/01)

©COPYRIGHT 2016 CH2M HILL

INSTRUCTIONS FOR COMPLETION OF SF-LLL, DISCLOSURE OF LOBBYING ACTIVITIES

This disclosure form shall be completed by the reporting entity, whether subawardee or prime Federal recipient, at the initiation or receipt of a covered Federal action, or a material change to a previous filing, pursuant to title 31 U.S.C. section 1352. The filing of a form is required for each payment or agreement to make payment to any lobbying entity for influencing or attempting to influence an officer or employee of any agency, a Member of Congress, an officer or employee of Congress, or an employee of a Member of Congress in connection with a covered Federal action. Complete all items that apply for both the initial filing and material change report. Refer to the implementing guidance published by the Office of Management and Budget for additional information.

1. **Identify the type of covered Federal action for which lobbying activity is and/or has been secured to influence the outcome of a covered Federal action.**

2. **Identify the status of the covered Federal action.**

3. **Identify the appropriate classification of this report. If this is a follow up report caused by a material change to the information previously reported, enter the year and quarter in which the change occurred. Enter the date of the last previously submitted report by the reporting entity for this covered Federal action.**

4. **Enter the full name, address, city, state and zip code of the reporting entity. Include Congressional District, if known. Check the appropriate classification of the reporting entity that designates if it is or expects to be, a prime or subaward recipient. Identify the tier of the subawardee, e.g., the first subawardee of the prime is the 1st tier. Subawards include but are not limited to subcontracts, subgrants and contract awards under grants.**

5. **If the organization filing the report in item 4 checks "Subawardee", then enter the full name, address, city, state and zip code of the prime Federal recipient. Include Congressional District, if known.**

6. **Enter the name of the Federal agency making the award or loan commitment. Include at least one organizational level below agency name, if known. For example, Department of Transportation, United States Coast Guard.**

7. **Enter the Federal program name or description for the covered Federal action (item 1). If known, enter the full Catalog of Federal Domestic Assistance (CFDA) number for grants, cooperative agreements, loans, and loan commitments.**

©COPYRIGHT 2016 CH2M HILL

8. Enter the most appropriate Federal identifying number available for the Federal action identified in item 1 (e.g., Request for Proposal (RFP) number; Invitation for Bid (IFB) number; grant announcement number; the contract, grant, or loan award number; the application/proposal control number assigned by the Federal agency). Include prefixes, e.g., "RFP-DE-90-001."

9. For a covered Federal action where there has been an award or loan commitment by the Federal agency, enter the Federal amount of the award/loan commitment for the prime entity identified in item 4 or 5.

10. (a) Enter the full name, address, city, state and zip code of the lobbying entity engaged by the reporting entity identified in item 4 to influence the covered Federal action.

(b) Enter the full names of the individual(s) performing services, and include full address if different from 10 (a). Enter Last Name, First Name, and Middle Initial (MI).

11. The certifying official shall sign and date the form, print his/her name, title and telephone number.

According to the Paperwork Reduction Act, as amended, no persons are required to respond to a collection of information unless it displays a valid OMB Control Number. The valid OMB control number for this information collection is OMB No. 0348-0046. Public reporting burden for this collection of information is estimated to average 30 minutes per response, including time for reviewing instructions, searching existing data sources, gathering and maintaining the data needed, and completing and reviewing the collection of information. Send comments regarding the burden estimate or any other aspect of this collection of information, including suggestions for reducing this burden, to the Office of Management and Budget, Paperwork Reduction Project (0348-0046), Washington, D.C. 20503.

Form DEP 55-221 (01/01)

©COPYRIGHT 2016 CH2M HILL

NON-COLLUSION DECLARATION AND COMPLIANCE WITH 49 CFR §29.

ITEM/SEGMENT NO.:_____
F.A.P. NO.:
PARCEL NO.:
COUNTY OF:
BID LETTING OF:_____ ,_____

I, _____, hereby
(NAME)
declare that I am_____ of_____
(TITLE) (FIRM)
Of_____
(CITY AND STATE)
and that I am the person responsible within my firm for the final decision as to the price(s) and amount of this Bid on this State Project.

I further declare that:

1. The prices(s) and amount of this bid have been arrived at independently, without consultation, communication or agreement, for the purpose of restricting competition with any other contractor, bidder or potential bidder.

2. Neither the price(s) nor the amount of this bid have been disclosed to any other firm or person who is a bidder or potential bidder on this project, and will not be so disclosed prior to the bid opening.

3. No attempt has been made or will be made to solicit, cause or induce any other firm or person to refrain from bidding on this project, or to submit a bid higher than the bid of this firm, or any intentionally high or non-competitive bid or other form of complementary bid.

4. The bid of my firm is made in good faith and not pursuant to any agreement or discussion with, or inducement from, any firm or person to submit a complementary bid.

5. My firm has not offered or entered into a subcontract or agreement regarding the purchase of materials or services from any firm or person, or offered, promised or paid cash or anything of value to any firm or person, whether in connection with this or any other project, in consideration for an agreement or promise by any firm or person to refrain from bidding or to submit a complementary bid on this project.

6. My firm has not accepted or been promised any subcontract or agreement regarding the sale of materials or services to any firm or person, and has not been promised or paid cash or anything of value by any firm or person, whether in connection with this or any other project, in consideration for my firm's submitting a complementary bid, or agreeing to do so, on this project.

7. I have made a diligent inquiry of all members, officers, employees, and agents of my firm with responsibilities relating to the preparation, approval or submission of my firm's bid on this project and have been advised by each of them that he or she has not participated in any communication, consultation, discussion, agreement, collusion, act or other conduct inconsistent with any of the statements and representations made in this Declaration.

©COPYRIGHT 2016 CH2M HILL

8. As required by Section 337.165, Florida Statutes, the firm has fully informed the Department of Transportation in writing of all convictions of the firm, its affiliates (as defined in Section 337.165(l)(a), Florida Statutes), and all directors, officers, and employees of the firm and its affiliates for violation of state or federal antitrust laws with respect to a public contract or for violation of any state or federal law involving fraud, bribery, collusion, conspiracy or material misrepresentation with respect to a public contract. This includes disclosure of the names of current employees of the firm or affiliates who were convicted of contract crimes while in the employ of another company.

9. I certify that, except as noted below, neither my firm nor any person associated therewith in the capacity of owner, partner, director, officer, principal, investigator, project director, manager, auditor, and/or position involving the administration of Federal funds:

(a) is presently debarred, suspended, proposed for debarment, declared ineligible, or voluntarily excluded from covered transactions, as defined in 49 CFR §29.110(a), by any Federal department or agency;

(b) has within a three-year period preceding this certification been convicted of or had a civil judgment rendered against him or her for: commission of fraud or a criminal offense in connection with obtaining, attempting to obtain, or performing a Federal, State or local government transaction or public contract; violation of Federal or State antitrust statutes; or commission of embezzlement, theft, forgery, bribery, falsification or destruction of records, making false statements or receiving stolen property;

(c) is presently indicted for or otherwise criminally or civilly charged by a Federal, State or local governmental entity with commission of any of the offenses enumerated in paragraph 9(b) of this certification; and

(d) has within a three-year period preceding this certification had one or more Federal, State or local government public transactions terminated for cause or default..

10. I(We), certify that I(We), shall not knowingly enter into any transaction with any subcontractor, material supplier, or vendor who is debarred, suspended, declared ineligible, or voluntarily excluded from participation in this contract by any Federal Agency unless authorized by the Department.

Where I am unable to declare or certify as to any of the statements contained in the above stated paragraphs numbered (1) through (10), I have provided an explanation in the "Exceptions" portion below or by attached separate sheet.

EXCEPTIONS:

©COPYRIGHT 2016 CH2M HILL

(Any exception listed above will not necessarily result in denial of award, but will be considered in determining bidder responsibility. For any exception noted, indicate to whom it applies, initiating agency and dates of agency action.

Providing false information may result in criminal prosecution and/or administrative sanctions.)

I declare under penalty of perjury that the foregoing is true and correct.

CONTRACTOR: (Seal)

BY:_____ WITNESS:_____
NAME AND TITLE PRINTED

BY:_____ WITNESS:_____
SIGNATURE

Executed on this_____ day of_____, _____

FAILURE TO FULLY COMPLETE AND EXECUTE THIS DOCUMENT MAY RESULT IN THE BID BEING DECLARED NONRESPONSIVE

©COPYRIGHT 2016 CH2M HILL

©COPYRIGHT 2016 CH2M HILL

FLORIDA TRENCH SAFETY ACT COMPLIANCE
Trench Excavation Safety System and Shoring

CERTIFICATION

All excavation, trenching, and related sheeting, bracing, etc. on this project (Seawall Repairs at Zero Duval) shall conform to the requirements of the Florida Trench Safety Act (90-96, CS/SB 2626), which incorporates by reference, OSHA's excavation safety standards, 29 CFR 1926.650 Subpart P including all subsequent revisions or updates to the these standards.

By submission of this bid and subsequent execution of this Contract, the undersigned certifies compliance with the above mentioned standards and further stipulates that all costs associated with this compliance are detailed below as well as included in their lump sum bid amount.

Summary of Costs:

Trench Safety Measure	Units	Quantity	Unit Cost	Extended Cost
A._____	_____	_____	_____	_____
B._____	_____	_____	_____	_____

_____
Signature

_____
Date

STATE OF _____

COUNTY OF _____

PERSONALLY APPEARED BEFORE ME, the undersigned authority,

_____, who, after first being sworn by me affixed his /her signature in the space,

provided above on the _____ day of _____, 20___.

_____
Notary Public (Seal)

MY COMMISSION EXPIRES:_____

©COPYRIGHT 2016 CH2M HILL

©COPYRIGHT 2016 CH2M HILL

SUSPENSION AND DEBARMENT CERTIFICATION

CERTIFICATION REGARDING DEBARMENTS, SUSPENSION, INELIGIBILITY AND VOLUNTARY EXCLUSION-LOWER TIER FEDERALLY FUNDED TRANSACTIONS

1. The undersigned hereby certifies that neither it nor its principals is presently debarred, suspended, proposed for debarment, declared ineligible, or voluntarily excluded from participation in this transaction by any Federal department or agency.

2. The undersigned also certifies that it and its principals:

(a) Have not within a three-year period preceding this certification been convicted of or had a civil judgment rendered against them for commission of fraud or a criminal offense in connection with obtaining, attempting to obtain, or performing a public (Federal, State or local) transaction or contract under a public transaction; violation of Federal or State anti-trust statutes or commission of embezzlement, theft, forgery, bribery, falsification or destruction of records, making false statements, or receiving stolen property.

(b) Are not presently indicated for or otherwise criminally or civilly charged by a governmental entity (Federal, State or local) with commission of any of the offenses enumerated in paragraph 2.(a) of this Certification; and

(c) Have not within a three-year period preceding this certification had one or more public transactions (Federal, State or local) terminated for cause or default.

3. Where the undersigned is unable to certify to any of the statements in this certification, an explanation shall be attached to this certification.

Dated this day of, _____, 20_____

By_____
Authorized Signature/Contractor

_____
Typed Name/Title

_____
Contractor's Firm Name

_____
Street Address

_____
Building, Suite Number

_____
City/State/Zip Code

_____
Area Code / Telephone Number

AGREEMENT

This Agreement, made and entered into this ___ day of _____ , 20___,

by and between the City of Key West, hereinafter called the "Owner," and

_____

hereinafter called the "Contractor";

WITNESSETH:

The Contractor, in consideration of the sum to be paid him by the Owner and of the covenants and agreements herein contained, hereby agrees at his own proper cost and expense to do all the work and furnish all the materials, tools, labor, and all appliances, machinery, and appurtenances for Repairs and Improvements at Zero Duval and Mallory Square, to the extent of the Bid made by the Contractor, dated the _____ day of _____ , 20___, all in full compliance with the Contract Documents referred to herein.

The BIDDING REQUIREMENTS, including the signed copy of the Bid, the CONTRACT FORMS, the CONDITIONS OF THE CONTRACT, the TECHNICAL SPECIFICATIONS, and the DRAWINGS, which consist of Detailed Drawings for "Repairs and Improvements at Zero Duval and Mallory Square," dated _____, 20___, are hereby referred to and by reference made a part of this Contract as fully and completely as if the same were fully set forth herein and are mutually cooperative therewith.

In consideration of the performance of the work as set forth in these Contract Documents, the Owner agrees to pay to the Contractor the amount bid in the Bid as adjusted in accordance with the Contract Documents, or as otherwise herein provided, and to make such payments in the manner and at the times provided in the Contract Documents.

The Contractor agrees to complete the work within the time specified and to accept as full payment hereunder the amounts computed as determined by the Contract Documents and based on the said Bid.

The Contractor agrees to remedy all defects appearing in the work or developing in the materials furnished and the workmanship performed under this Contract during the warranty period after the date of final acceptance of the work by the Owner, and further agrees to indemnify and save the Owner harmless from any costs encountered in remedying such defects.

©COPYRIGHT 2016 CH2M HILL

It is agreed that the Project, based upon the Bid, shall be totally completed and ready for final payment and acceptance on November 30, 2016, based on a Notice to Proceed date of April 15, 2016.

Liquidated Damages: The Contractor recognizes that time is of the essence and that the Owner will suffer financial loss if the Work is not completed within the times specified in paragraph above, plus any extensions thereof allowed in accordance with Article 12, of the General Conditions.

Owner and Contractor also recognize the delays, expense and difficulties involved in proving in a legal proceeding the actual loss suffered by the Owner, if the Work is not completed on time. Accordingly, instead of requiring any such proof, the Owner and Contractor agree that as liquidated damages for delay (but not as a penalty) Contractor shall pay the Owner ($3,000.00) for each day that expires after the time specified for final completion.

IN WITNESS WHEREOF, we, the parties hereto, each herewith subscribe the same this ____ day of _____, A.D., 20___.

CITY OF KEY WEST

By:_____

Title: _____

_____

Contractor:

By:_____

Title: _____

Approved as to Form

_____

Attorney for Owner

END OF SECTION

©COPYRIGHT 2016 CH2M HILL

PERFORMANCE BOND

BOND NO.
AMOUNT: $

KNOW ALL MEN BY THESE PRESENTS, that in accordance with Florida Statutes Section 255.05, _____
with offices at _____
hereinafter called the CONTRACTOR (Principal), and
_____
with offices at _____
a corporation duly organized and existing under and by virtue of the laws of the State of Florida, hereinafter called the SURETY, and authorized to transact business within the State of Florida, as SURETY, are held and firmly bound unto **CITY OF KEY WEST,** represented by its _____, hereinafter called the CITY (Obligee), in the sum of:

_____DOLLARS ($_____), lawful money of the United States of America, for the payment of which, well and truly be made to the CITY, the CONTRACTOR and the SURETY bind themselves and each of their heirs, executors, administrators, successors, and assigns, jointly and severally, firmly by these presents as follows:

THE CONDITION OF THE ABOVE OBLIGATION IS SUCH THAT:

WHEREAS, the CONTRACTOR has executed and entered into a certain Contract hereto attached, with the CITY, dated _____, 20___, to furnish at his own cost, charges, and expense all the necessary materials, equipment, and/or labor in strict and express accordance with said Contract and the Contract Documents as defined therein, all of which is made a part of said Contract by certain terms and conditions in said Contract more particularly mentioned, which Contract, consisting of the various Contract Documents is made a part of this Bond as fully and completely as if said Contract Documents were set forth herein;

NOW THEREFORE, the conditions of this obligation are such that if the above bounden CONTRACTOR:

1. Shall in all respects comply with the terms and conditions of said Contract and his obligation there under, including the Contract Documents (which include the plans, drawings, specifications, and conditions as prepared by the CITY, invitation to bid, instructions to bidders, the CONTRACTOR'S bid as accepted by the above CITY, the bid and contract performance and payment bonds, and all addenda, if any, issued prior to the opening of bids), being made a part of this bond by reference, at the times and in the manner prescribed in the contract; and

2. Promptly makes payments to all claimants, as defined in Section 255.05(1), Florida Statutes, supplying PRINCIPAL with labor, materials, or supplies, used directly or indirectly by PRINCIPAL in the prosecution of the work provided for in the contract; and

©COPYRIGHT 2016 CH2M HILL

3. Pays CITY all losses, costs, expenses, damages, attorney's fees, including appellate proceedings, injury or loss of whatever kind and however arising including, without limitation, delay damages to which said CITY may be subject by reason of any wrongdoing, misconduct, want of care or skill, negligence, failure of performance, breach, failure to petition within the prescribed time, or default, including patent infringements, on the part of said CONTRACTOR, his agents or employees, in the execution or performance of said Contract; and

4. Performs the guarantee of all work and materials furnished under the contract for the time specified in the contract, then this obligation shall be void; otherwise, to remain in full force and effect for the term of said Contract.

AND, the said Surety for value received, hereby stipulates and agrees that no change involving any extension of time, or addition to the terms of the Contract Documents, or to the work to be performed, or materials to be furnished there under shall affect said obligation of said Surety on this Bond, and the said Surety does hereby waive notice of any such changes, extension of time, alterations, or additions of the terms of the Contract Documents, or to the work.

Any action instituted by a claimant under this bond for payment must be in accordance with the notice and time limitation provisions in Section 255.05(2), Florida Statutes.

IN WITNESS WHEREOF, the above parties bonded together have executed this instrument this _____ day of _____, 20___, the name and corporate seal of each corporate party being hereto affixed and those presents duly signed by its undersigned representative, pursuant to authority of its governing body.

CONTRACTOR

By: _____

(SEAL)

ATTEST

SURETY

By: _____

(SEAL)

ATTEST

©COPYRIGHT 2016 CH2M HILL

PAYMENT BOND

BOND NO.
AMOUNT: $

KNOW ALL MEN BY THESE PRESENTS, that in accordance with Florida Statutes Section 255.05, _____
with offices at _____
hereinafter called the CONTRACTOR, (Principal), and
_____
with offices _____
a corporation duly organized and existing under and by virtue of the laws of the State of _____ , hereinafter called the SURETY, and authorized to transact business within the State of Florida, as SURETY, are held and firmly bound CITY OF KEY WEST**,** represented by its _____, hereinafter called the City (Obligee), in the sum of: _____DOLLARS ($_____), lawful money of the United States of America, for the payment of which, well and truly be made to the CITY, and the CONTRACTOR and the SURETY bind themselves and each of their heirs, executors, administrators, successors, and assigns, jointly and severally, firmly by these presents as follows:

THE CONDITION OF THE ABOVE OBLIGATION IS SUCH THAT:

WHEREAS, the CONTRACTOR has executed and entered into a certain Contract for _____ attached hereto, with the CITY, dated _____ 20_____, to furnish at his own cost, charges, and expense the necessary materials, equipment, and/or labor in strict and express accordance with said Contract and the plans, drawings (if any), and specifications prepared by the CITY, all of which is made a part of said Contract by certain terms and conditions in said Contract more particularly mentioned, which Contract, consisting of the various Contract Documents specifically mentioned herein and relative hereto, is made a part of this Bond as fully and completely as if said Contract Documents were set forth herein.

NOW THEREFORE, the conditions of this obligation are such that if the above bounden CONTRACTOR shall in all respects comply with the terms and conditions of said Contract and his obligation thereunder, including the Contract Documents (which include the plans, drawings, specifications, and conditions prepared by the CITY, invitation to bid, instructions to bidders, the CONTRACTOR'S bid as accepted by the CITY, the bid and contract and payment bonds, and all addenda, if any, issued prior to the opening of bids), and further that if said CONTRACTOR shall promptly make payments to all persons supplying materials, equipment, and/or labor, used directly or indirectly by said CONTRACTOR or subcontractors in the prosecution of the work for said contract is accordance with Florida Statutes, Section 255.05 or Section 713.23, then

©COPYRIGHT 2016 CH2M HILL

this obligation shall be void; otherwise to remain in full force and effect for the term of said contract, including and all guarantee periods as specifically mentioned in said Contract Documents.

AND, the said SURETY for value received, hereby stipulates and agrees that no change involving any extension of time, or addition to the terms of the Contract or to the work to be performed, or materials to be furnished thereunder, or in the Contract Documents and specifications accompanying the said contract shall affect said obligation of said SURETY on this Bond, and the said SURETY does hereby waive notice of any such changes, extension of time, alternations, or additions of the terms of the Contract, or to the work, to the Contract Documents, or to the specifications.

Claimant shall give written notice to the CONTRACTOR and the SURETY as required by Section 255.05 or Section 713.23, Florida Statutes. Any action instituted against the CONTRACTOR or SURETY under this bond for payment must be in accordance with the notice and time limitation provisions in Section 255.05(2) or Section 713.23, Florida Statutes.

IN WITNESS WHEREOF, the above parties bounded together have executed this instrument this _____ day of _____, 20_____, the name and corporate seal of each corporate party being hereto affixed and those presents duly signed by its undersigned representative, pursuant to authority of its governing body.

CONTRACTOR

By:_____

(SEAL)

ATTEST

SURETY

By _____

(SEAL)

ATTEST

©COPYRIGHT 2016 CH2M HILL

City of Key West
P.O. Box 1409
Key West, FL 33041

Notice of Award

Date: _____

Project Number: EN-102

Owner:	City of Key West
Company:	City of Key West
Address:	Office of the City Clerk
Address:	City of Key West P.O. Box 1409 Key West, FL 33041-1409

Project Name: Repairs and Improvements at Zero Duval and Mallory Square **(ITB 16-002)**

Dear:

At a meeting of the City of Key West Commission held on**_____,** 20**__.COMPANY NAME** was awarded the contract for Repairs and Improvements at Zero Duval and Mallory Square. The total Contract amount shall not exceed $ _____.

Enclosed please find three copies of the Contract Documents for your execution. Please complete the necessary pages, affixing signatures, notary and / or corporate seals, etc. where necessary and return to this office by **DATE**. Also, you need to be mobilized on **DATE**, and remit a bill to the City of Key West by **DATE**.

The Certificate of Insurance must be attached to the documents; one original and two copies are acceptable.

Powers – of – Attorney must be submitted in each bond document, an original and two copies are permissible.

A copy of your City of Key West Business License Tax Receipt, subcontractors City of Key West Business License Tax Receipt and one copy in PDF on disc.

Sincerely,

_____
Project Manager

cc: Cheri Smith, City Clerk
Project File

©COPYRIGHT 2016 CH2M HILL

©COPYRIGHT 2016 CH2M HILL

CERTIFICATE OF SUBSTANTIAL COMPLETION

Project: **Repairs and Improvements at Zero Duval and Mallory Square**
Project No. **EN-1002**

DATE OF ISSUANCE _____

CITY _____

CITY'S CONTRACT NO._____

CONTRACTOR_____ ENGINEER_____

This Certificate of Substantial Completion applies to all Work under the Contract Documents or to the following specified parts thereof:

TO:_____
CITY

And To _____
CONTRACTOR

The Work to which this Certificate applies has been inspected by authorized representatives of CITY, CONTRACTOR, AND ENGINEER and that Work is hereby declared to be substantially complete in accordance with the Contract Documents on

_____
DATE OF SUBSTANTIAL COMPLETION

A tentative list of items to be completed or corrected is attached hereto. This list may not be all-inclusive, and the failure to include an item in it does not alter the responsibility of the CONTRACTOR to complete all the Work in accordance with the Contract Documents. The items in the tentative list shall be completed or corrected by CONTRACTOR within ____ days of the above date of Substantial Completion.

EJCDC No. 1910-8-D (1990 Edition)
Prepared by the Engineers Joint Contract Documents Committee and endorsed by the Associated General Contractors of America

©COPYRIGHT 2016 CH2M HILL

©COPYRIGHT 2016 CH2M HILL

CERTIFICATE OF FINAL COMPLETION

Project: **Repairs and Improvements at Zero Duval and Mallory Square**
Project No. **EN-1002**

Date of Issuance:_____

CITY_____

Contractor _____ **Engineer**_____

This Certificate of Completion applies to all Work under the Contract Documents.

The Work to which this Certificate applies has been inspected by authorized representatives of CITY and ENGINEER, and that Work is hereby declared to be complete in accordance with the Contract Documents on

_____
DATE OF COMPLETION

Executed by ENGINEER on_____ , (Date)

_____
ENGINEER

By:_____
(Authorized Signature)

CONTRACTOR accepts this Certificate of Completion on _____,
(DATE)

_____
CONTRACTOR

By:_____

CITY accepts this Certificate of Completion on_____,
(DATE)

_____
CITY

By:_____
(Authorized Signature)

©COPYRIGHT 2016 CH2M HILL

©COPYRIGHT 2016 CH2M HILL

NOTICE TO PROCEED

Date: _____, 20___ Project No: EN-1002

Contractor: _____

Address: _____

_____

Project: **Repairs and Improvements at Zero Duval and Mallory Square**
Project No. **EN-1002**

You are hereby notified to commence work on _____, 20_____ for the Repairs and Improvements at Zero Duval and Mallory Square and all related work, as designated by the City in accordance with the Contract made with the City of Key West on the _____day of _____, 20____. The amount of time to fully complete the work is one hundred eighty (180) consecutive calendar days and should be fully completed on or before_____.

Sincerely,

_____

Project Manager

Receipt of this NOTICE TO PROCEED is hereby acknowledged this, the
___ day of _____, 20_____.

CONTRACTOR: _____

By: _____

TITLE: _____ DATE: _____

Please return one (1) copy of this notice to:

CH2M HILL.
6410 5th Street
Suite 2A
Key West, FL 33040

©COPYRIGHT 2016 CH2M HILL

©COPYRIGHT 2016 CH2M HILL

PAYMENT APPLICATION AND CERTIFICATE

Date: _____

Application No.: _____of _____ Sheet: _____ of _____

Period From: _____ to _____, 20___.

Project: **Repairs and Improvements at Zero Duval**

Project No.: **EN-1002**

Contractor: _____

Original Contract Sum $ _____

Contract Modifications Approved in Previous Applications

Additions $ _____ Deductions: $ _____

Contract Modifications Approved this Period (List Contract Modifications Nos.____)

Additions $ _____ Deductions: $ _____

1. Net Change by Contract Modifications (sum of lines 2 and 3) $ _____
2. Revised Contract Amount (Sum of Lines 1 and 4) $ _____
3. Total Value of Work to Date (Estimate Attached) $ _____
4. Percent Project Complete (Line 6 / Line 5 x 100) =_____%
5. Total Materials on Hand (Listing Attached) $ _____
6. Subtotal – Work Completed and Stored (Sum of Lines 6 and 8) $ _____
7. Total Retainage (_____% x Line 9) $ _____
8. Total Earned to Date, Less Retainage (Line 9 less Line 10) $ _____
9. Less Previous Certificates for Payments (item 11 from Previous Application) $ _____
10. Current Payment Due (Line 11 less Line 12) $ _____
11. Amount paid to Subcontractors Previous Pay Application $ _____

The undersigned Contractor certifies that the Work covered by this Application for Payment has been completed in accordance with the Contract Documents that the current payment shown herein is now due, and that title for all Work, materials, and equipment covered in this Application will pass to the CITY free and clear of all liens at the time of payment.

_____ _____ _____

Contractor By Date

I hereby acknowledge that the material and labor involved on the above estimate is correct to the best of my knowledge, information and belief, and payment on same is due Contractor.

_____ _____

Project Manager Date

©COPYRIGHT 2016 CH2M HIL

PAYMENT APPLICATION AND CERTIFICATE

Date: _____

Application No.: _____of _____ Sheet: _____ of _____

Period From: _____ to _____, 20___.

Project: **Repairs and Improvements at Mallory Square**

Project No.: **EN-1002**

Contractor: _____

Original Contract Sum $ _____

Contract Modifications Approved in Previous Applications

Additions $ _____ Deductions: $ _____

Contract Modifications Approved this Period (List Contract Modifications Nos.____)

Additions $ _____ Deductions: $ _____

12. Net Change by Contract Modifications (sum of lines 2 and 3) $ _____

13. Revised Contract Amount (Sum of Lines 1 and 4) $ _____

14. Total Value of Work to Date (Estimate Attached) $ _____

15. Percent Project Complete (Line 6 / Line 5 x 100) =_____%

16. Total Materials on Hand (Listing Attached) $ _____

17. Subtotal – Work Completed and Stored (Sum of Lines 6 and 8) $ _____

18. Total Retainage (_____% x Line 9) $ _____

19. Total Earned to Date, Less Retainage (Line 9 less Line 10) $ _____

20. Less Previous Certificates for Payments (item 11 from Previous Application) $ _____

21. Current Payment Due (Line 11 less Line 12) $ _____

22. Amount paid to Subcontractors Previous Pay Application $ _____

The undersigned Contractor certifies that the Work covered by this Application for Payment has been completed in accordance with the Contract Documents that the current payment shown herein is now due, and that title for all Work, materials, and equipment covered in this Application will pass to the CITY free and clear of all liens at the time of payment.

_____ _____ _____

Contractor By Date

I hereby acknowledge that the material and labor involved on the above estimate is correct to the best of my knowledge, information and belief, and payment on same is due Contractor.

_____ _____

Project Manager Date

©COPYRIGHT 2016 CH2M HILL

CITY OF KEY WEST

Construction Compliance Certification with Specifications and Plans

Project Number EN-1002

Date

PO Number

Monthly ☐

Final ☐

Repairs and Improvements at Zero Duval and Mallory Square

Prime Contractor for the above referenced contract hereby verifies based on personnel knowledge or reasonable investigation and good faith belief, all Quality Control functions and Quality Control sampling and test results are in substantial compliance with the pertinent specification requirements for this project The represents work completed between _____ and _____. Exceptions are listed below.

(add addition sheets as required)

Item No.

Exception:

A false statement or omission made in connection with this certification is sufficient cause for suspension, revocation, or denial of qualification to bid, and a determination of non-responsibility, and may subject the person and /or entity making the false statement to any civil and criminal penalties available pursuant to applicable State and Federal Law.

Contractor:_____ date;_____

State of Florida

County of:

Sworn to and subscribed before me this _____ day

of _____,_____

By_____

(print name of person signing certification)

Notary Public

Commission Expires

©COPYRIGHT 2016 CH2M HILL

©COPYRIGHT 2016 CH2M HILL

Certificate of Final Payment

Date:

Payment Application No. _____

Period From: _____ to _____

Project: **Repairs and Improvements at Zero Duval and Mallory Square**
Project No. **EN-1002**

Contractor: _____

I Hereby Acknowledge that this contract has been completed in substantial compliance with the items of the agreement, Specifications and Plans, as-builts, work change directives and field orders. I, therefore, request acceptance of the work and processing of this final estimate as showing the total amount of money due in compliance with the terms of the Contract.

I_____ certify to the Owner that the Contractor met the Grant requirements provided in the contract documents

Contractor: _____

Address:_____

_____

With the acceptance of this final payment, we, the Contractor, release the Owner and the Engineer and their agents, from all claims and liability to us, the Contractor, for all things done or furnished in connection with the Work, and every act of the Owner and others relating to, or arising, out of the Work.

_____ _____

Signature Date

_____

Title

Sworn and subscribed before me this_____day of _____, 20___

NOTARY PUBLIC, State of Florida at Large

My Commission Expires:

©COPYRIGHT 2016 CH2M HILL

ACCEPTED BY:

_____ _____

Project Manager Date

Owner

By: _____ _____

Date

©COPYRIGHT 2016 CH2M HILL

STANDARD
GENERAL CONDITIONS
OF THE
CONSTRUCTION CONTRACT

Prepared by

ENGINEERS JOINT CONTRACT DOCUMENTS COMMITTEE

and

Issued and Published Jointly By

PROFESSIONAL ENGINEERS IN PRIVATE PRACTICE
a practice division of the
NATIONAL SOCIETY OF PROFESSIONAL ENGINEERS

AMERICAN COUNCIL OF ENGINEERING COMPANIES

AMERICAN SOCIETY OF CIVIL ENGINEERS

This document has been approved and endorsed by

The Associated General Contractors of America

Construction Specifications Institute

Copyright ©2002

National Society of Professional Engineers
1420 King Street, Alexandria, VA 22314

American Council of Engineering Companies
1015 15th Street, N.W., Washington, DC 20005

American Society of Civil Engineers
1801 Alexander Bell Drive, Reston, VA 20191-4400

TABLE OF CONTENTS

Page

ARTICLE 1 - DEFINITIONS AND TERMINOLOGY 7
1.01 *Defined Terms* 7
1.02 *Terminology* 9
ARTICLE 2 - PRELIMINARY MATTERS 10
2.01 *Delivery of Bonds and Evidence of Insurance* 10
2.02 *Copies of Documents* 10
2.03 *Commencement of Contract Times; Notice to Proceed* 10
2.04 *Starting the Work* 10
2.05 *Before Starting Construction* 10
2.06 *Preconstruction Conference* 10
2.07 *Initial Acceptance of Schedules* 11
ARTICLE 3 - CONTRACT DOCUMENTS: INTENT, AMENDING, REUSE 11
3.01 *Intent* 11
3.02 *Reference Standards* 11
3.03 *Reporting and Resolving Discrepancies* 11
3.04 *Amending and Supplementing Contract Documents* 12
3.05 *Reuse of Documents* 12
3.06 *Electronic Data* 12
ARTICLE 4 - AVAILABILITY OF LANDS; SUBSURFACE AND PHYSICAL CONDITIONS; HAZARDOUS ENVIRONMENTAL CONDITIONS; REFERENCE POINTS 12
4.01 *Availability of Lands* 12
4.02 *Subsurface and Physical Conditions* 13
4.03 *Differing Subsurface or Physical Conditions* 13
4.04 *Underground Facilities* 14
4.05 *Reference Points* 15
4.06 *Hazardous Environmental Condition at Site* 15
ARTICLE 5 - BONDS AND INSURANCE 16
5.01 *Performance, Payment, and Other Bonds* 16
5.02 *Licensed Sureties and Insurers* 16
5.03 *Certificates of Insurance* 16
5.04 *Contractor's Liability Insurance* 16
5.05 *Owner's Liability Insurance* 17
5.06 *Property Insurance* 17
5.07 *Waiver of Rights* 18
5.08 *Receipt and Application of Insurance Proceeds* 19
5.09 *Acceptance of Bonds and Insurance; Option to Replace* 19
5.10 *Partial Utilization, Acknowledgment of Property Insurer* 19
ARTICLE 6 - CONTRACTOR'S RESPONSIBILITIES 19
6.01 *Supervision and Superintendence* 19
6.02 *Labor; Working Hours* 20
6.03 *Services, Materials, and Equipment* 20
6.04 *Progress Schedule* 20
6.05 *Substitutes and "Or-Equals"* 20
6.06 *Concerning Subcontractors, Suppliers, and Others* 22
6.07 *Patent Fees and Royalties* 23
6.08 *Permits* 23
6.09 *Laws and Regulations* 23
6.10 *Taxes* 23
6.11 *Use of Site and Other Areas* 23
6.12 *Record Documents* 24
6.13 *Safety and Protection* 24

Page

6.14 *Safety Representative* 24
6.15 *Hazard Communication Programs* 24
6.16 *Emergencies* 25
6.17 *Shop Drawings and Samples* 25
6.18 *Continuing the Work* 26
6.19 *Contractor's General Warranty and Guarantee* 26
6.20 *Indemnification* 26
6.21 *Delegation of Professional Design Services* 27
ARTICLE 7 - OTHER WORK AT THE SITE 27
7.01 *Related Work at Site* 27
7.02 *Coordination* 28
7.03 *Legal Relationships* 28
ARTICLE 8 - OWNER'S RESPONSIBILITIES 28
8.01 *Communications to Contractor* 28
8.02 *Replacement of Engineer* 28
8.03 *Furnish Data* 28
8.04 *Pay When Due* 28
8.05 *Lands and Easements; Reports and Tests* 28
8.06 *Insurance* 28
8.07 *Change Orders* 28
8.08 *Inspections, Tests, and Approvals* 28
8.09 *Limitations on Owner's Responsibilities* 28
8.10 *Undisclosed Hazardous Environmental Condition* 29
8.11 *Evidence of Financial Arrangements* 29
ARTICLE 9 - ENGINEER'S STATUS DURING CONSTRUCTION 29
9.01 *Owner's Representative* 29
9.02 *Visits to Site* 29
9.03 *Project Representative* 29
9.04 *Authorized Variations in Work* 29
9.05 *Rejecting Defective Work* 29
9.06 *Shop Drawings, Change Orders and Payments* 29
9.07 *Determinations for Unit Price Work* 30
9.08 *Decisions on Requirements of Contract Documents and Acceptability of Work* 30
9.09 *Limitations on Engineer's Authority and Responsibilities* 30
ARTICLE 10 - CHANGES IN THE WORK; CLAIMS 30
10.01 *Authorized Changes in the Work* 30
10.02 *Unauthorized Changes in the Work* 31
10.03 *Execution of Change Orders* 31
10.04 *Notification to Surety* 31
10.05 *Claims* 31
ARTICLE 11 - COST OF THE WORK; ALLOWANCES; UNIT PRICE WORK 32
11.01 *Cost of the Work* 32
11.02 *Allowances* 33
11.03 *Unit Price Work* 34
ARTICLE 12 - CHANGE OF CONTRACT PRICE; CHANGE OF CONTRACT TIMES 34
12.01 *Change of Contract Price* 34
12.02 *Change of Contract Times* 35
12.03 *Delays* 35
ARTICLE 13 - TESTS AND INSPECTIONS; CORRECTION, REMOVAL OR ACCEPTANCE OF DEFECTIVE WORK 35
13.01 *Notice of Defects* 35
13.02 *Access to Work* 35
13.03 *Tests and Inspections* 36
13.04 *Uncovering Work* 36

Page

13.05 *Owner May Stop the Work* 36
13.06 *Correction or Removal of Defective Work* 36
13.07 *Correction Period* 37
13.08 *Acceptance of Defective Work* 37
13.09 *Owner May Correct Defective Work* 37
ARTICLE 14 - PAYMENTS TO CONTRACTOR AND COMPLETION 38
14.01 *Schedule of Values* 38
14.02 *Progress Payments* 38
14.03 *Contractor's Warranty of Title* 40
14.04 *Substantial Completion* 40
14.05 *Partial Utilization* 40
14.06 *Final Inspection* 41
14.07 *Final Payment* 41
14.08 *Final Completion Delayed* 41
14.09 *Waiver of Claims* 41
ARTICLE 15 - SUSPENSION OF WORK AND TERMINATION 42
15.01 *Owner May Suspend Work* 42
15.02 *Owner May Terminate for Cause* 42
15.03 *Owner May Terminate For Convenience* 43
15.04 *Contractor May Stop Work or Terminate* 43
ARTICLE 16 - DISPUTE RESOLUTION 43
16.01 *Methods and Procedures* 43
ARTICLE 17 - MISCELLANEOUS 43
17.01 *Giving Notice* 43
17.02 *Computation of Times* 44
17.03 *Cumulative Remedies* 44
17.04 *Survival of Obligations* 44
17.05 *Controlling Law* 44
17.06 *Headings* 44

GENERAL CONDITIONS

ARTICLE 1 - DEFINITIONS AND TERMINOLOGY

1.01 *Defined Terms*

A. Wherever used in the Bidding Requirements or Contract Documents and printed with initial capital letters, the terms listed below will have the meanings indicated which are applicable to both the singular and plural thereof. In addition to terms specifically defined, terms with initial capital letters in the Contract Documents include references to identified articles and paragraphs, and the titles of other documents or forms.

1. *Addenda*--Written or graphic instruments issued prior to the opening of Bids which clarify, correct, or change the Bidding Requirements or the proposed Contract Documents.

2. *Agreement*--The written instrument which is evidence of the agreement between Owner and Contractor covering the Work.

3. *Application for Payment*--The form acceptable to Engineer which is to be used by Contractor during the course of the Work in requesting progress or final payments and which is to be accompanied by such supporting documentation as is required by the Contract Documents.

4. *Asbestos*--Any material that contains more than one percent asbestos and is friable or is releasing asbestos fibers into the air above current action levels established by the United States Occupational Safety and Health Administration.

5. *Bid*--The offer or proposal of a Bidder submitted on the prescribed form setting forth the prices for the Work to be performed.

6. *Bidder*--The individual or entity who submits a Bid directly to Owner.

7. *Bidding Documents*--The Bidding Requirements and the proposed Contract Documents (including all Addenda).

8. *Bidding Requirements*--The Advertisement or Invitation to Bid, Instructions to Bidders, Bid security of acceptable form, if any, and the Bid Form with any supplements.

9. *Change Order*--A document recommended by Engineer which is signed by Contractor and Owner and authorizes an addition, deletion, or revision in the Work or an adjustment in the Contract Price or the Contract Times, issued on or after the Effective Date of the Agreement.

10. *Claim*--A demand or assertion by Owner or Contractor seeking an adjustment of Contract Price or Contract Times, or both, or other relief with respect to the terms of the Contract. A demand for money or services by a third party is not a Claim.

11. *Contract*--The entire and integrated written agreement between the Owner and Contractor concerning the Work. The Contract supersedes prior negotiations, representations, or agreements, whether written or oral.

12. *Contract Documents*-- Those items so designated in the Agreement. Only printed or hard copies of the items listed in the Agreement are Contract Documents. Approved Shop Drawings, other Contractor's submittals, and the reports and drawings of subsurface and physical conditions are not Contract Documents.

13. *Contract Price*--The moneys payable by Owner to Contractor for completion of the Work in accordance with the Contract Documents as stated in the Agreement (subject to the provisions of Paragraph 11.03 in the case of Unit Price Work).

14. *Contract Times*--The number of days or the dates stated in the Agreement to: (i) achieve Milestones, if any, (ii) achieve Substantial Completion; and (iii) complete the Work so that it is ready for final payment as evidenced by Engineer's written recommendation of final payment.

15. *Contractor*--The individual or entity with whom Owner has entered into the Agreement.

16. *Cost of the Work*--See Paragraph 11.01.A for definition.

17. *Drawings*--That part of the Contract Documents prepared or approved by Engineer which graphically shows the scope, extent, and character of the Work to be performed by Contractor. Shop Drawings and other Contractor submittals are not Drawings as so defined.

18. *Effective Date of the Agreement*--The date indicated in the Agreement on which it becomes effective, but if no such date is indicated, it means the date on which the Agreement is signed and delivered by the last of the two parties to sign and deliver.

19. *Engineer*--The individual or entity named as such in the Agreement.

20. *Field Order*--A written order issued by Engineer which requires minor changes in the Work but which does not involve a change in the Contract Price or the Contract Times.

21. *General Requirements*--Sections of Division 1 of the Specifications. The General Requirements pertain to all sections of the Specifications.

22. *Hazardous Environmental Condition*--The presence at the Site of Asbestos, PCBs, Petroleum, Hazardous Waste, or Radioactive Material in such quantities or circumstances that may present a substantial danger to persons or property exposed thereto in connection with the Work.

23. *Hazardous Waste*--The term Hazardous Waste shall have the meaning provided in Section 1004 of the Solid Waste Disposal Act (42 USC Section 6903) as amended from time to time.

24. *Laws and Regulations; Laws or Regulations*--Any and all applicable laws, rules, regulations, ordinances, codes, and orders of any and all governmental bodies, agencies, authorities, and courts having jurisdiction.

25. *Liens*--Charges, security interests, or encumbrances upon Project funds, real property, or personal property.

26. *Milestone*--A principal event specified in the Contract Documents relating to an intermediate completion date or time prior to Substantial Completion of all the Work.

27. *Notice of Award*--The written notice by Owner to the Successful Bidder stating that upon timely compliance by the Successful Bidder with the conditions precedent listed therein, Owner will sign and deliver the Agreement.

28. *Notice to Proceed*--A written notice given by Owner to Contractor fixing the date on which the Contract Times will commence to run and on which Contractor shall start to perform the Work under the Contract Documents.

29. *Owner*--The individual or entity with whom Contractor has entered into the Agreement and for whom the Work is to be performed.

30. *PCBs*--Polychlorinated biphenyls.

31. *Petroleum*--Petroleum, including crude oil or any fraction thereof which is liquid at standard conditions of temperature and pressure (60 degrees Fahrenheit and 14.7 pounds per square inch absolute), such as oil, petroleum, fuel oil, oil sludge, oil refuse, gasoline, kerosene, and oil mixed with other non-Hazardous Waste and crude oils.

32. *Progress Schedule*--A schedule, prepared and maintained by Contractor, describing the sequence and duration of the activities comprising the Contractor's plan to accomplish the Work within the Contract Times.

33. *Project*--The total construction of which the Work to be performed under the Contract Documents may be the whole, or a part.

34. *Project Manual*--The bound documentary information prepared for bidding and constructing the Work. A listing of the contents of the Project Manual, which may be bound in one or more volumes, is contained in the table(s) of contents.

35. *Radioactive Material*--Source, special nuclear, or byproduct material as defined by the Atomic Energy Act of 1954 (42 USC Section 2011 et seq.) as amended from time to time.

36. *Related Entity* -- An officer, director, partner, employee, agent, consultant, or subcontractor.

37. *Resident Project Representative*--The authorized representative of Engineer who may be assigned to the Site or any part thereof.

38. *Samples*--Physical examples of materials, equipment, or workmanship that are representative of some portion of the Work and which establish the standards by which such portion of the Work will be judged.

39. *Schedule of Submittals*--A schedule, prepared and maintained by Contractor, of required submittals and the time requirements to support scheduled performance of related construction activities.

40. *Schedule of Values*--A schedule, prepared and maintained by Contractor, allocating portions of the Contract Price to various portions of the Work and used as the basis for reviewing Contractor's Applications for Payment.

41. *Shop Drawings*--All drawings, diagrams, illustrations, schedules, and other data or information which are specifically prepared or assembled by or for Contractor and submitted by Contractor to illustrate some portion of the Work.

42. *Site*--Lands or areas indicated in the Contract Documents as being furnished by Owner upon which the Work is to be performed, including rights-of-way and

easements for access thereto, and such other lands furnished by Owner which are designated for the use of Contractor.

43. *Specifications*--That part of the Contract Documents consisting of written requirements for materials, equipment, systems, standards and workmanship as applied to the Work, and certain administrative requirements and procedural matters applicable thereto.

44. *Subcontractor*--An individual or entity having a direct contract with Contractor or with any other Subcontractor for the performance of a part of the Work at the Site.

45. *Substantial Completion*--The time at which the Work (or a specified part thereof) has progressed to the point where, in the opinion of Engineer, the Work (or a specified part thereof) is sufficiently complete, in accordance with the Contract Documents, so that the Work (or a specified part thereof) can be utilized for the purposes for which it is intended. The terms "substantially complete" and "substantially completed" as applied to all or part of the Work refer to Substantial Completion thereof.

46. *Successful Bidder*--The Bidder submitting a responsive Bid to whom Owner makes an award.

47. *Supplementary Conditions*--That part of the Contract Documents which amends or supplements these General Conditions.

48. *Supplier*--A manufacturer, fabricator, supplier, distributor, materialman, or vendor having a direct contract with Contractor or with any Subcontractor to furnish materials or equipment to be incorporated in the Work by Contractor or any Subcontractor.

49. *Underground Facilities*--All underground pipelines, conduits, ducts, cables, wires, manholes, vaults, tanks, tunnels, or other such facilities or attachments, and any encasements containing such facilities, including those that convey electricity, gases, steam, liquid petroleum products, telephone or other communications, cable television, water, wastewater, storm water, other liquids or chemicals, or traffic or other control systems.

50. *Unit Price Work*--Work to be paid for on the basis of unit prices.

51. *Work*--The entire construction or the various separately identifiable parts thereof required to be provided under the Contract Documents. Work includes and is the result of performing or providing all labor, services, and documentation necessary to produce such construction, and furnishing, installing, and incorporating all materials and equipment into such construction, all as required by the Contract Documents.

52. *Work Change Directive*--A written statement to Contractor issued on or after the Effective Date of the Agreement and signed by Owner and recommended by Engineer ordering an addition, deletion, or revision in the Work, or responding to differing or unforeseen subsurface or physical conditions under which the Work is to be performed or to emergencies. A Work Change Directive will not change the Contract Price or the Contract Times but is evidence that the parties expect that the change ordered or documented by a Work Change Directive will be incorporated in a subsequently issued Change Order following negotiations by the parties as to its effect, if any, on the Contract Price or Contract Times.

1.02 *Terminology*

A. The following words or terms are not defined but, when used in the Bidding Requirements or Contract Documents, have the following meaning.

B. *Intent of Certain Terms or Adjectives*

1. The Contract Documents include the terms "as allowed," "as approved," "as ordered", "as directed" or terms of like effect or import to authorize an exercise of professional judgment by Engineer. In addition, the adjectives "reasonable," "suitable," "acceptable," "proper," "satisfactory," or adjectives of like effect or import are used to describe an action or determination of Engineer as to the Work. It is intended that such exercise of professional judgment, action or determination will be solely to evaluate, in general, the Work for compliance with the requirements of and information in the Contract Documents and conformance with the design concept of the completed Project as a functioning whole as shown or indicated in the Contract Documents (unless there is a specific statement indicating otherwise). The use of any such term or adjective is not intended to and shall not be effective to assign to Engineer any duty or authority to supervise or direct the performance of the Work or any duty or authority to undertake responsibility contrary to the provisions of Paragraph 9.09 or any other provision of the Contract Documents.

C. *Day*

1. The word "day" means a calendar day of 24 hours measured from midnight to the next midnight.

D. *Defective*

1. The word "defective," when modifying the word "Work," refers to Work that is unsatisfactory, faulty, or deficient in that it:

a. does not conform to the Contract Documents, or

b. does not meet the requirements of any applicable inspection, reference standard, test, or approval referred to in the Contract Documents, or

c. has been damaged prior to Engineer's recommendation of final payment (unless responsibility for the protection thereof has been assumed by Owner at Substantial Completion in accordance with Paragraph 14.04 or 14.05).

E. *Furnish, Install, Perform, Provide*

1. The word "furnish," when used in connection with services, materials, or equipment, shall mean to supply and deliver said services, materials, or equipment to the Site (or some other specified location) ready for use or installation and in usable or operable condition.

2. The word "install," when used in connection with services, materials, or equipment, shall mean to put into use or place in final position said services, materials, or equipment complete and ready for intended use.

3. The words "perform" or "provide," when used in connection with services, materials, or equipment, shall mean to furnish and install said services, materials, or equipment complete and ready for intended use.

4. When "furnish," "install," "perform," or "provide" is not used in connection with services, materials, or equipment in a context clearly requiring an obligation of Contractor, "provide" is implied.

F. Unless stated otherwise in the Contract Documents, words or phrases which have a well-known technical or construction industry or trade meaning are used in the Contract Documents in accordance with such recognized meaning.

ARTICLE 2 - PRELIMINARY MATTERS

2.01 *Delivery of Bonds and Evidence of Insurance*

A. When Contractor delivers the executed counterparts of the Agreement to Owner, Contractor shall also deliver to Owner such bonds as Contractor may be required to furnish.

B. *Evidence of Insurance:* Before any Work at the Site is started, Contractor and Owner shall each deliver to the other, with copies to each additional insured identified in the Supplementary Conditions, certificates of insurance (and other evidence of insurance which either of them or any additional insured may reasonably request) which Contractor and Owner respectively are required to purchase and maintain in accordance with Article 5.

2.02 *Copies of Documents*

A. Owner shall furnish to Contractor up to ten printed or hard copies of the Drawings and Project Manual. Additional copies will be furnished upon request at the cost of reproduction.

2.03 *Commencement of Contract Times; Notice to Proceed*

A. The Contract Times will commence to run on the thirtieth day after the Effective Date of the Agreement or, if a Notice to Proceed is given, on the day indicated in the Notice to Proceed. A Notice to Proceed may be given at any time within 30 days after the Effective Date of the Agreement. In no event will the Contract Times commence to run later than the sixtieth day after the day of Bid opening or the thirtieth day after the Effective Date of the Agreement, whichever date is earlier.

2.04 *Starting the Work*

A. Contractor shall start to perform the Work on the date when the Contract Times commence to run. No Work shall be done at the Site prior to the date on which the Contract Times commence to run.

2.05 *Before Starting Construction*

A. *Preliminary Schedules:* Within 10 days after the Effective Date of the Agreement (unless otherwise specified in the General Requirements), Contractor shall submit to Engineer for timely review**:**

1. a preliminary Progress Schedule; indicating the times (numbers of days or dates) for starting and completing the various stages of the Work, including any Milestones specified in the Contract Documents;

2. a preliminary Schedule of Submittals; and

3. a preliminary Schedule of Values for all of the Work which includes quantities and prices of items which when added together equal the Contract Price and subdivides the Work into component parts in sufficient detail to serve as the basis for progress payments during performance of the Work. Such prices will include an appropriate amount of overhead and profit applicable to each item of Work.

2.06 *Preconstruction Conference*

A. Before any Work at the Site is started, a conference attended by Owner, Contractor, Engineer, and others as appropriate will be held to establish a working understanding among the parties as to the Work and to discuss the schedules referred to in Paragraph 2.05.A, procedures for handling Shop Drawings and other submittals, processing Applications for Payment, and maintaining required records.

2.07 *Initial Acceptance of Schedules*

A. At least 10 days before submission of the first Application for Payment a conference attended by Contractor, Engineer, and others as appropriate will be held to review for acceptability to Engineer as provided below the schedules submitted in accordance with Paragraph 2.05.A. Contractor shall have an additional 10 days to make corrections and adjustments and to complete and resubmit the schedules. No progress payment shall be made to Contractor until acceptable schedules are submitted to Engineer.

1. The Progress Schedule will be acceptable to Engineer if it provides an orderly progression of the Work to completion within the Contract Times. Such acceptance will not impose on Engineer responsibility for the Progress Schedule, for sequencing, scheduling, or progress of the Work nor interfere with or relieve Contractor from Contractor's full responsibility therefor.

2. Contractor's Schedule of Submittals will be acceptable to Engineer if it provides a workable arrangement for reviewing and processing the required submittals.

3. Contractor's Schedule of Values will be acceptable to Engineer as to form and substance if it provides a reasonable allocation of the Contract Price to component parts of the Work.

ARTICLE 3 - CONTRACT DOCUMENTS: INTENT, AMENDING, REUSE

3.01 *Intent*

A. The Contract Documents are complementary; what is required by one is as binding as if required by all.

B. It is the intent of the Contract Documents to describe a functionally complete Project (or part thereof) to be constructed in accordance with the Contract Documents. Any labor, documentation, services, materials, or equipment that may reasonably be inferred from the Contract Documents or from prevailing custom or trade usage as being required to produce the intended result will be provided whether or not specifically called for at no additional cost to Owner.

C. Clarifications and interpretations of the Contract Documents shall be issued by Engineer as provided in Article 9.

3.02 *Reference Standards*

A. Standards, Specifications, Codes, Laws, and Regulations

1. Reference to standards, specifications, manuals, or codes of any technical society, organization, or association, or to Laws or Regulations, whether such reference be specific or by implication, shall mean the standard, specification, manual, code, or Laws or Regulations in effect at the time of opening of Bids (or on the Effective Date of the Agreement if there were no Bids), except as may be otherwise specifically stated in the Contract Documents.

2. No provision of any such standard, specification, manual or code, or any instruction of a Supplier shall be effective to change the duties or responsibilities of Owner, Contractor, or Engineer, or any of their subcontractors, consultants, agents, or employees from those set forth in the Contract Documents. No such provision or instruction shall be effective to assign to Owner, or Engineer, or any of, their Related Entities, any duty or authority to supervise or direct the performance of the Work or any duty or authority to undertake responsibility inconsistent with the provisions of the Contract Documents.

3.03 *Reporting and Resolving Discrepancies*

A. Reporting Discrepancies

1. *Contractor's Review of Contract Documents Before Starting Work*: Before undertaking each part of the Work, Contractor shall carefully study and compare the Contract Documents and check and verify pertinent figures therein and all applicable field measurements. Contractor shall promptly report in writing to Engineer any conflict, error, ambiguity, or discrepancy which Contractor may discover and shall obtain a written interpretation or clarification from Engineer before proceeding with any Work affected thereby.

2. *Contractor's Review of Contract Documents During Performance of Work*: If, during the performance of the Work, Contractor discovers any conflict, error, ambiguity, or discrepancy within the Contract Documents or between the Contract Documents and any provision of any Law or Regulation applicable to the performance of the Work or of any standard, specification, manual or code, or of any instruction of any Supplier, Contractor

shall promptly report it to Engineer in writing. Contractor shall not proceed with the Work affected thereby (except in an emergency as required by Paragraph 6.16.A) until an amendment or supplement to the Contract Documents has been issued by one of the methods indicated in Paragraph 3.04.

3. Contractor shall not be liable to Owner or Engineer for failure to report any conflict, error, ambiguity, or discrepancy in the Contract Documents unless Contractor knew or reasonably should have known thereof.

B. Resolving Discrepancies

1. Except as may be otherwise specifically stated in the Contract Documents, the provisions of the Contract Documents shall take precedence in resolving any conflict, error, ambiguity, or discrepancy between the provisions of the Contract Documents and:

a. the provisions of any standard, specification, manual, code, or instruction (whether or not specifically incorporated by reference in the Contract Documents); or

b. the provisions of any Laws or Regulations applicable to the performance of the Work (unless such an interpretation of the provisions of the Contract Documents would result in violation of such Law or Regulation).

3.04 *Amending and Supplementing Contract Documents*

A. The Contract Documents may be amended to provide for additions, deletions, and revisions in the Work or to modify the terms and conditions thereof by either a Change Order or a Work Change Directive.

B. The requirements of the Contract Documents may be supplemented, and minor variations and deviations in the Work may be authorized, by one or more of the following ways:

1. A Field Order;

2. Engineer's approval of a Shop Drawing or Sample; (Subject to the provisions of Paragraph 6.17.D.3); or

3. Engineer's written interpretation or clarification.

3.05 *Reuse of Documents*

A. Contractor and any Subcontractor or Supplier or other individual or entity performing or furnishing all of the Work under a direct or indirect contract with Contractor, shall not:

1. have or acquire any title to or ownership rights in any of the Drawings, Specifications, or other documents (or copies of any thereof) prepared by or bearing the seal of Engineer or Engineer's consultants, including electronic media editions; or

2. reuse any of such Drawings, Specifications, other documents, or copies thereof on extensions of the Project or any other project without written consent of Owner and Engineer and specific written verification or adaption by Engineer.

B. The prohibition of this Paragraph 3.05 will survive final payment, or termination of the Contract. Nothing herein shall preclude Contractor from retaining copies of the Contract Documents for record purposes.

3.06 *Electronic Data*

A. Copies of data furnished by Owner or Engineer to Contractor or Contractor to Owner or Engineer that may be relied upon are limited to the printed copies (also known as hard copies). Files in electronic media format of text, data, graphics, or other types are furnished only for the convenience of the receiving party. Any conclusion or information obtained or derived from such electronic files will be at the user's sole risk. If there is a discrepancy between the electronic files and the hard copies, the hard copies govern.

B. Because data stored in electronic media format can deteriorate or be modified inadvertently or otherwise without authorization of the data's creator, the party receiving electronic files agrees that it will perform acceptance tests or procedures within 60 days, after which the receiving party shall be deemed to have accepted the data thus transferred. Any errors detected within the 60-day acceptance period will be corrected by the transferring party.

C. When transferring documents in electronic media format, the transferring party makes no representations as to long term compatibility, usability, or readability of documents resulting from the use of software application packages, operating systems, or computer hardware differing from those used by the data's creator.

ARTICLE 4 - AVAILABILITY OF LANDS; SUBSURFACE AND PHYSICAL CONDITIONS; HAZARDOUS ENVIRONMENTAL CONDITIONS; REFERENCE POINTS

4.01 *Availability of Lands*

A. Owner shall furnish the Site. Owner shall notify Contractor of any encumbrances or restrictions not of general application but specifically related to use of the Site with which Contractor must comply in performing the Work. Owner will obtain in a timely manner and pay for easements for permanent structures or permanent changes in existing facilities. If Contractor and Owner are unable to agree on entitlement to or on the amount or extent, if any, of any adjustment in the Contract Price or Contract Times, or both, as a result of any delay in Owner's furnishing the Site or a part thereof, Contractor may make a Claim therefor as provided in Paragraph 10.05.

B. Upon reasonable written request, Owner shall furnish Contractor with a current statement of record legal title and legal description of the lands upon which the Work is to be performed and Owner's interest therein as necessary for giving notice of or filing a mechanic's or construction lien against such lands in accordance with applicable Laws and Regulations.

C. Contractor shall provide for all additional lands and access thereto that may be required for temporary construction facilities or storage of materials and equipment.

4.02 *Subsurface and Physical Conditions*

A. *Reports and Drawings:* The Supplementary Conditions identify:

1. those reports of explorations and tests of subsurface conditions at or contiguous to the Site that Engineer has used in preparing the Contract Documents; and

2. those drawings of physical conditions in or relating to existing surface or subsurface structures at or contiguous to the Site (except Underground Facilities) that Engineer has used in preparing the Contract Documents.

B. *Limited Reliance by Contractor on Technical Data Authorized:* Contractor may rely upon the general accuracy of the "technical data" contained in such reports and drawings, but such reports and drawings are not Contract Documents. Such "technical data" is identified in the Supplementary Conditions. Except for such reliance on such "technical data," Contractor may not rely upon or make any claim against Owner or Engineer, or any of their Related Entities with respect to:

1. the completeness of such reports and drawings for Contractor's purposes, including, but not limited to, any aspects of the means, methods, techniques, sequences, and procedures of construction to be employed by Contractor, and safety precautions and programs incident thereto; or

2. other data, interpretations, opinions, and information contained in such reports or shown or indicated in such drawings; or

3. any Contractor interpretation of or conclusion drawn from any "technical data" or any such other data, interpretations, opinions, or information.

4.03 *Differing Subsurface or Physical Conditions*

A. *Notice:* If Contractor believes that any subsurface or physical condition at or contiguous to the Site that is uncovered or revealed either:

1. is of such a nature as to establish that any "technical data" on which Contractor is entitled to rely as provided in Paragraph 4.02 is materially inaccurate; or

2. is of such a nature as to require a change in the Contract Documents; or

3. differs materially from that shown or indicated in the Contract Documents; or

4. is of an unusual nature, and differs materially from conditions ordinarily encountered and generally recognized as inherent in work of the character provided for in the Contract Documents;

then Contractor shall, promptly after becoming aware thereof and before further disturbing the subsurface or physical conditions or performing any Work in connection therewith (except in an emergency as required by Paragraph 6.16.A), notify Owner and Engineer in writing about such condition. Contractor shall not further disturb such condition or perform any Work in connection therewith (except as aforesaid) until receipt of written order to do so.

B. *Engineer's Review*: After receipt of written notice as required by Paragraph 4.03.A, Engineer will promptly review the pertinent condition, determine the necessity of Owner's obtaining additional exploration or tests with respect thereto, and advise Owner in writing (with a copy to Contractor) of Engineer's findings and conclusions.

C. Possible Price and Times Adjustments

1. The Contract Price or the Contract Times, or both, will be equitably adjusted to the extent that the existence of such differing subsurface or physical condition causes an increase or decrease in Contractor's cost of, or time required for, performance of the Work; subject, however, to the following:

a. such condition must meet any one or more of the categories described in Paragraph 4.03.A; and

b. with respect to Work that is paid for on a Unit Price Basis, any adjustment in Contract Price will be subject to the provisions of Paragraphs 9.07 and 11.03.

2. Contractor shall not be entitled to any adjustment in the Contract Price or Contract Times if:

a. Contractor knew of the existence of such conditions at the time Contractor made a final commitment to Owner with respect to Contract Price and Contract Times by the submission of a Bid or becoming bound under a negotiated contract; or

b. the existence of such condition could reasonably have been discovered or revealed as a result of any examination, investigation, exploration, test, or study of the Site and contiguous areas required by the Bidding Requirements or Contract Documents to be conducted by or for Contractor prior to Contractor's making such final commitment; or

c. Contractor failed to give the written notice as required by Paragraph 4.03.A.

3. If Owner and Contractor are unable to agree on entitlement to or on the amount or extent, if any, of any adjustment in the Contract Price or Contract Times, or both, a Claim may be made therefor as provided in Paragraph 10.05. However, Owner and Engineer, and any of their Related Entities shall not be liable to Contractor for any claims, costs, losses, or damages (including but not limited to all fees and charges of engineers, architects, attorneys, and other professionals and all court or arbitration or other dispute resolution costs) sustained by Contractor on or in connection with any other project or anticipated project.

4.04 *Underground Facilities*

A. *Shown or Indicated:* The information and data shown or indicated in the Contract Documents with respect to existing Underground Facilities at or contiguous to the Site is based on information and data furnished to Owner or Engineer by the owners of such Underground Facilities, including Owner, or by others. Unless it is otherwise expressly provided in the Supplementary Conditions:

1. Owner and Engineer shall not be responsible for the accuracy or completeness of any such information or data; and

2. the cost of all of the following will be included in the Contract Price, and Contractor shall have full responsibility for:

a. reviewing and checking all such information and data,

b. locating all Underground Facilities shown or indicated in the Contract Documents,

c. coordination of the Work with the owners of such Underground Facilities, including Owner, during construction, and

d. the safety and protection of all such Underground Facilities and repairing any damage thereto resulting from the Work.

B. *Not Shown or Indicated*

1. If an Underground Facility is uncovered or revealed at or contiguous to the Site which was not shown or indicated, or not shown or indicated with reasonable accuracy in the Contract Documents, Contractor shall, promptly after becoming aware thereof and before further disturbing conditions affected thereby or performing any Work in connection therewith (except in an emergency as required by Paragraph 6.16.A), identify the owner of such Underground Facility and give written notice to that owner and to Owner and Engineer. Engineer will promptly review the Underground Facility and determine the extent, if any, to which a change is required in the Contract Documents to reflect and document the consequences of the existence or location of the Underground Facility. During such time, Contractor shall be responsible for the safety and protection of such Underground Facility.

2. If Engineer concludes that a change in the Contract Documents is required, a Work Change Directive or a Change Order will be issued to reflect and document such consequences. An equitable adjustment shall be made in the Contract Price or Contract Times, or both, to the extent that they are attributable to the existence or location of any Underground Facility that was not shown or indicated or not shown or indicated with reasonable accuracy in the Contract Documents and that Contractor did not know of and could not reasonably have been expected to be aware of or to have anticipated. If Owner and Contractor are unable to agree on entitlement to or on the amount or extent, if any, of any such adjustment in Contract Price or Contract Times, Owner or Contractor may make a Claim therefor as provided in Paragraph 10.05.

4.05 *Reference Points*

A. Owner shall provide engineering surveys to establish reference points for construction which in Engineer's judgment are necessary to enable Contractor to proceed with the Work. Contractor shall be responsible for laying out the Work, shall protect and preserve the established reference points and property monuments, and shall make no changes or relocations without the prior written approval of Owner. Contractor shall report to Engineer whenever any reference point or property monument is lost or destroyed or requires relocation because of necessary changes in grades or locations, and shall be responsible for the accurate replacement or relocation of such reference points or property monuments by professionally qualified personnel.

4.06 *Hazardous Environmental Condition at Site*

A. *Reports and Drawings:* Reference is made to the Supplementary Conditions for the identification of those reports and drawings relating to a Hazardous Environmental Condition identified at the Site, if any, that have been utilized by the Engineer in the preparation of the Contract Documents.

B. *Limited Reliance by Contractor on Technical Data Authorized:* Contractor may rely upon the general accuracy of the "technical data" contained in such reports and drawings, but such reports and drawings are not Contract Documents. Such "technical data" is identified in the Supplementary Conditions. Except for such reliance on such "technical data," Contractor may not rely upon or make any claim against Owner or Engineer, or any of their Related Entities with respect to:

1. the completeness of such reports and drawings for Contractor's purposes, including, but not limited to, any aspects of the means, methods, techniques, sequences and procedures of construction to be employed by Contractor and safety precautions and programs incident thereto; or

2. other data, interpretations, opinions and information contained in such reports or shown or indicated in such drawings; or

3. any Contractor interpretation of or conclusion drawn from any "technical data" or any such other data, interpretations, opinions or information.

C. Contractor shall not be responsible for any Hazardous Environmental Condition uncovered or revealed at the Site which was not shown or indicated in Drawings or Specifications or identified in the Contract Documents to be within the scope of the Work. Contractor shall be responsible for a Hazardous Environmental Condition created with any materials brought to the Site by Contractor, Subcontractors, Suppliers, or anyone else for whom Contractor is responsible.

D. If Contractor encounters a Hazardous Environmental Condition or if Contractor or anyone for whom Contractor is responsible creates a Hazardous Environmental Condition, Contractor shall immediately: (i) secure or otherwise isolate such condition; (ii) stop all Work in connection with such condition and in any area affected thereby (except in an emergency as required by Paragraph 6.16.A); and (iii) notify Owner and Engineer (and promptly thereafter confirm such notice in writing). Owner shall promptly consult with Engineer concerning the necessity for Owner to retain a qualified expert to evaluate such condition or take corrective action, if any.

E. Contractor shall not be required to resume Work in connection with such condition or in any affected area until after Owner has obtained any required permits related thereto and delivered to Contractor written notice: (i) specifying that such condition and any affected area is or has been rendered safe for the resumption of Work; or (ii) specifying any special conditions under which such Work may be resumed safely. If Owner and Contractor cannot agree as to entitlement to or on the amount or extent, if any, of any adjustment in Contract Price or Contract Times, or both, as a result of such Work stoppage or such special conditions under which Work is agreed to be resumed by Contractor, either party may make a Claim therefor as provided in Paragraph 10.05.

F. If after receipt of such written notice Contractor does not agree to resume such Work based on a reasonable belief it is unsafe, or does not agree to resume such Work under such special conditions, then Owner may order the portion of the Work that is in the area affected by such condition to be deleted from the Work. If Owner and Contractor cannot agree as to entitlement to or on the amount or extent, if any, of an adjustment in Contract Price or Contract Times as a result of deleting such portion of the Work, then either party may make a Claim therefor as provided in Paragraph 10.05. Owner may have such deleted portion of the Work performed by Owner's own forces or others in accordance with Article 7.

G. To the fullest extent permitted by Laws and Regulations, Owner shall indemnify and hold harmless Contractor, Subcontractors, and Engineer, and the officers, directors, partners, employees, agents, consultants, and subcontractors of each and any of them from and against all claims, costs, losses, and damages (including but not limited to all fees and charges of engineers, architects, attorneys, and other professionals and all court or arbitration or other dispute resolution costs) arising out of or relating to a Hazardous

Environmental Condition, provided that such Hazardous Environmental Condition: (i) was not shown or indicated in the Drawings or Specifications or identified in the Contract Documents to be included within the scope of the Work, and (ii) was not created by Contractor or by anyone for whom Contractor is responsible. Nothing in this Paragraph 4.06. G shall obligate Owner to indemnify any individual or entity from and against the consequences of that individual's or entity's own negligence.

H. To the fullest extent permitted by Laws and Regulations, Contractor shall indemnify and hold harmless Owner and Engineer, and the officers, directors, partners, employees, agents, consultants, and subcontractors of each and any of them from and against all claims, costs, losses, and damages (including but not limited to all fees and charges of engineers, architects, attorneys, and other professionals and all court or arbitration or other dispute resolution costs) arising out of or relating to a Hazardous Environmental Condition created by Contractor or by anyone for whom Contractor is responsible. Nothing in this Paragraph 4.06.H shall obligate Contractor to indemnify any individual or entity from and against the consequences of that individual's or entity's own negligence.

I. The provisions of Paragraphs 4.02, 4.03, and 4.04 do not apply to a Hazardous Environmental Condition uncovered or revealed at the Site.

ARTICLE 5 - BONDS AND INSURANCE

5.01 *Performance, Payment, and Other Bonds*

A. Contractor shall furnish performance and payment bonds, each in an amount at least equal to the Contract Price as security for the faithful performance and payment of all of Contractor's obligations under the Contract Documents. These bonds shall remain in effect until one year after the date when final payment becomes due or until completion of the correction period specified in Paragraph 13.07, whichever is later, except as provided otherwise by Laws or Regulations or by the Contract Documents. Contractor shall also furnish such other bonds as are required by the Contract Documents.

B. All bonds shall be in the form prescribed by the Contract Documents except as provided otherwise by Laws or Regulations, and shall be executed by such sureties as are named in the current list of "Companies Holding Certificates of Authority as Acceptable Sureties on Federal Bonds and as Acceptable Reinsuring Companies" as published in Circular 570 (amended) by the Financial Management Service, Surety Bond Branch, U.S. Department of the Treasury. All bonds signed by an agent must be accompanied by a certified copy of the agent's authority to act.

C. If the surety on any bond furnished by Contractor is declared bankrupt or becomes insolvent or its right to do business is terminated in any state where any part of the Project is located or it ceases to meet the requirements of Paragraph 5.01.B, Contractor shall promptly notify Owner and Engineer and shall, within 20 days after the event giving rise to such notification, provide another bond and surety, both of which shall comply with the requirements of Paragraphs 5.01.B and 5.02.

5.02 *Licensed Sureties and Insurers*

A. All bonds and insurance required by the Contract Documents to be purchased and maintained by Owner or Contractor shall be obtained from surety or insurance companies that are duly licensed or authorized in the jurisdiction in which the Project is located to issue bonds or insurance policies for the limits and coverages so required. Such surety and insurance companies shall also meet such additional requirements and qualifications as may be provided in the Supplementary Conditions.

5.03 *Certificates of Insurance*

A. Contractor shall deliver to Owner, with copies to each additional insured identified in the Supplementary Conditions, certificates of insurance (and other evidence of insurance requested by Owner or any other additional insured) which Contractor is required to purchase and maintain.

B. Owner shall deliver to Contractor, with copies to each additional insured identified in the Supplementary Conditions, certificates of insurance (and other evidence of insurance requested by Contractor or any other additional insured) which Owner is required to purchase and maintain.

5.04 *Contractor's Liability Insurance*

A. Contractor shall purchase and maintain such liability and other insurance as is appropriate for the Work being performed and as will provide protection from claims set forth below which may arise out of or result from Contractor's performance of the Work and Contractor's other obligations under the Contract Documents, whether it is to be performed by Contractor, any Subcontractor or Supplier, or by anyone directly or indirectly employed by any of them to perform any of the Work, or by anyone for whose acts any of them may be liable:

1. claims under workers' compensation, disability benefits, and other similar employee benefit acts;

2. claims for damages because of bodily injury, occupational sickness or disease, or death of Contractor's employees;

3. claims for damages because of bodily injury, sickness or disease, or death of any person other than Contractor's employees;

4. claims for damages insured by reasonably available personal injury liability coverage which are sustained:

a. by any person as a result of an offense directly or indirectly related to the employment of such person by Contractor, or

b. by any other person for any other reason;

5. claims for damages, other than to the Work itself, because of injury to or destruction of tangible property wherever located, including loss of use resulting therefrom; and

6. claims for damages because of bodily injury or death of any person or property damage arising out of the ownership, maintenance or use of any motor vehicle.

B. The policies of insurance required by this Paragraph 5.04 shall:

1. with respect to insurance required by Paragraphs 5.04.A.3 through 5.04.A.6 inclusive, include as additional insured (subject to any customary exclusion regarding professional liability) Owner and Engineer, and any other individuals or entities identified in the Supplementary Conditions, all of whom shall be listed as additional insureds, and include coverage for the respective officers, directors, partners, employees, agents, consultants and subcontractors of each and any of all such additional insureds, and the insurance afforded to these additional insureds shall provide primary coverage for all claims covered thereby;

2. include at least the specific coverages and be written for not less than the limits of liability provided in the Supplementary Conditions or required by Laws or Regulations, whichever is greater;

3. include completed operations insurance;

4. include contractual liability insurance covering Contractor's indemnity obligations under Paragraphs 6.11 and 6.20;

5. contain a provision or endorsement that the coverage afforded will not be canceled, materially changed or renewal refused until at least 30 days prior written notice has been given to Owner and Contractor and to each other additional insured identified in the Supplementary Conditions to whom a certificate of insurance has been issued (and the certificates of insurance furnished by the Contractor pursuant to Paragraph 5.03 will so provide);

6. remain in effect at least until final payment and at all times thereafter when Contractor may be correcting, removing, or replacing defective Work in accordance with Paragraph 13.07; and

7. with respect to completed operations insurance, and any insurance coverage written on a claims-made basis, remain in effect for at least two years after final payment.

a. Contractor shall furnish Owner and each other additional insured identified in the Supplementary Conditions, to whom a certificate of insurance has been issued, evidence satisfactory to Owner and any such additional insured of continuation of such insurance at final payment and one year thereafter.

5.05 *Owner's Liability Insurance*

A. In addition to the insurance required to be provided by Contractor under Paragraph 5.04, Owner, at Owner's option, may purchase and maintain at Owner's expense Owner's own liability insurance as will protect Owner against claims which may arise from operations under the Contract Documents.

5.06 *Property Insurance*

A. Unless otherwise provided in the Supplementary Conditions, Owner shall purchase and maintain property insurance upon the Work at the Site in the amount of the full replacement cost thereof (subject to such deductible amounts as may be provided in the Supplementary Conditions or required by Laws and Regulations). This insurance shall:

1. include the interests of Owner, Contractor, Subcontractors, and Engineer, and any other individuals or entities identified in the Supplementary Conditions, and the officers, directors, partners, employees, agents, consultants and subcontractors of each and any of them, each of whom is deemed to have an insurable interest and shall be listed as an insured or additional insured;

2. be written on a Builder's Risk "all-risk" or open peril or special causes of loss policy form that shall at least include insurance for physical loss or damage to

the Work, temporary buildings, false work, and materials and equipment in transit, and shall insure against at least the following perils or causes of loss: fire, lightning, extended coverage, theft, vandalism and malicious mischief, earthquake, collapse, debris removal, demolition occasioned by enforcement of Laws and Regulations, water damage, (other than caused by flood) and such other perils or causes of loss as may be specifically required by the Supplementary Conditions;

3. include expenses incurred in the repair or replacement of any insured property (including but not limited to fees and charges of engineers and architects);

4. cover materials and equipment stored at the Site or at another location that was agreed to in writing by Owner prior to being incorporated in the Work, provided that such materials and equipment have been included in an Application for Payment recommended by Engineer;

5. allow for partial utilization of the Work by Owner;

6. include testing and startup; and

7. be maintained in effect until final payment is made unless otherwise agreed to in writing by Owner, Contractor, and Engineer with 30 days written notice to each other additional insured to whom a certificate of insurance has been issued.

B. Owner shall purchase and maintain such boiler and machinery insurance or additional property insurance as may be required by the Supplementary Conditions or Laws and Regulations which will include the interests of Owner, Contractor, Subcontractors, and Engineer, and any other individuals or entities identified in the Supplementary Conditions, and the officers, directors, partners, employees, agents, consultants and subcontractors of each and any of them, each of whom is deemed to have an insurable interest and shall be listed as an insured or additional insured.

C. All the policies of insurance (and the certificates or other evidence thereof) required to be purchased and maintained in accordance with Paragraph 5.06 will contain a provision or endorsement that the coverage afforded will not be canceled or materially changed or renewal refused until at least 30 days prior written notice has been given to Owner and Contractor and to each other additional insured to whom a certificate of insurance has been issued and will contain waiver provisions in accordance with Paragraph 5.07.

D. Owner shall not be responsible for purchasing and maintaining any property insurance specified in this Paragraph 5.06 to protect the interests of Contractor, Subcontractors, or others in the Work to the extent of any deductible amounts that are identified in the Supplementary Conditions. The risk of loss within such identified deductible amount will be borne by Contractor, Subcontractors, or others suffering any such loss, and if any of them wishes property insurance coverage within the limits of such amounts, each may purchase and maintain it at the purchaser's own expense.

E. If Contractor requests in writing that other special insurance be included in the property insurance policies provided under Paragraph 5.06, Owner shall, if possible, include such insurance, and the cost thereof will be charged to Contractor by appropriate Change Order. Prior to commencement of the Work at the Site, Owner shall in writing advise Contractor whether or not such other insurance has been procured by Owner.

5.07 *Waiver of Rights*

A. Owner and Contractor intend that all policies purchased in accordance with Paragraph 5.06 will protect Owner, Contractor, Subcontractors, and Engineer, and all other individuals or entities identified in the Supplementary Conditions to be listed as insureds or additional insureds (and the officers, directors, partners, employees, agents, consultants and subcontractors of each and any of them) in such policies and will provide primary coverage for all losses and damages caused by the perils or causes of loss covered thereby. All such policies shall contain provisions to the effect that in the event of payment of any loss or damage the insurers will have no rights of recovery against any of the insureds or additional insureds thereunder. Owner and Contractor waive all rights against each other and their respective officers, directors, partners, employees, agents, consultants and subcontractors of each and any of them for all losses and damages caused by, arising out of or resulting from any of the perils or causes of loss covered by such policies and any other property insurance applicable to the Work; and, in addition, waive all such rights against Subcontractors, and Engineer, and all other individuals or entities identified in the Supplementary Conditions to be listed as insured or additional insured (and the officers, directors, partners, employees, agents, consultants and subcontractors of each and any of them) under such policies for losses and damages so caused. None of the above waivers shall extend to the rights that any party making such waiver may have to the proceeds of insurance held by Owner as trustee or otherwise payable under any policy so issued.

B. Owner waives all rights against Contractor, Subcontractors, and Engineer, and the officers, directors, partners, employees, agents, consultants and subcontractors of each and any of them for:

1. loss due to business interruption, loss of use, or other consequential loss extending beyond direct

physical loss or damage to Owner's property or the Work caused by, arising out of, or resulting from fire or other perils whether or not insured by Owner; and

2. loss or damage to the completed Project or part thereof caused by, arising out of, or resulting from fire or other insured peril or cause of loss covered by any property insurance maintained on the completed Project or part thereof by Owner during partial utilization pursuant to Paragraph 14.05, after Substantial Completion pursuant to Paragraph 14.04, or after final payment pursuant to Paragraph 14.07.

C. Any insurance policy maintained by Owner covering any loss, damage or consequential loss referred to in Paragraph 5.07.B shall contain provisions to the effect that in the event of payment of any such loss, damage, or consequential loss, the insurers will have no rights of recovery against Contractor, Subcontractors, or Engineer, and the officers, directors, partners, employees, agents, consultants and subcontractors of each and any of them.

5.08 *Receipt and Application of Insurance Proceeds*

A. Any insured loss under the policies of insurance required by Paragraph 5.06 will be adjusted with Owner and made payable to Owner as fiduciary for the insureds, as their interests may appear, subject to the requirements of any applicable mortgage clause and of Paragraph 5.08.B. Owner shall deposit in a separate account any money so received and shall distribute it in accordance with such agreement as the parties in interest may reach. If no other special agreement is reached, the damaged Work shall be repaired or replaced, the moneys so received applied on account thereof, and the Work and the cost thereof covered by an appropriate Change Order .

B. Owner as fiduciary shall have power to adjust and settle any loss with the insurers unless one of the parties in interest shall object in writing within 15 days after the occurrence of loss to Owner's exercise of this power. If such objection be made, Owner as fiduciary shall make settlement with the insurers in accordance with such agreement as the parties in interest may reach. If no such agreement among the parties in interest is reached, Owner as fiduciary shall adjust and settle the loss with the insurers and, if required in writing by any party in interest, Owner as fiduciary shall give bond for the proper performance of such duties.

5.09 *Acceptance of Bonds and Insurance; Option to Replace*

A. If either Owner or Contractor has any objection to the coverage afforded by or other provisions of the bonds or insurance required to be purchased and maintained by the other party in accordance with Article 5 on the basis of non-conformance with the Contract Documents, the objecting party shall so notify the other party in writing within 10 days after receipt of the certificates (or other evidence requested) required by Paragraph 2.01.B. Owner and Contractor shall each provide to the other such additional information in respect of insurance provided as the other may reasonably request. If either party does not purchase or maintain all of the bonds and insurance required of such party by the Contract Documents, such party shall notify the other party in writing of such failure to purchase prior to the start of the Work, or of such failure to maintain prior to any change in the required coverage. Without prejudice to any other right or remedy, the other party may elect to obtain equivalent bonds or insurance to protect such other party's interests at the expense of the party who was required to provide such coverage, and a Change Order shall be issued to adjust the Contract Price accordingly.

5.10 *Partial Utilization, Acknowledgment of Property Insurer*

A. If Owner finds it necessary to occupy or use a portion or portions of the Work prior to Substantial Completion of all the Work as provided in Paragraph 14.05, no such use or occupancy shall commence before the insurers providing the property insurance pursuant to Paragraph 5.06 have acknowledged notice thereof and in writing effected any changes in coverage necessitated thereby. The insurers providing the property insurance shall consent by endorsement on the policy or policies, but the property insurance shall not be canceled or permitted to lapse on account of any such partial use or occupancy.

ARTICLE 6 - CONTRACTOR'S RESPONSIBILITIES

6.01 *Supervision and Superintendence*

A. Contractor shall supervise, inspect, and direct the Work competently and efficiently, devoting such attention thereto and applying such skills and expertise as may be necessary to perform the Work in accordance with the Contract Documents. Contractor shall be solely responsible for the means, methods, techniques, sequences, and procedures of construction. Contractor shall not be responsible for the negligence of Owner or Engineer in the design or specification of a specific means, method, technique, sequence, or procedure of construction which is shown or indicated in and expressly required by the Contract Documents.

B. At all times during the progress of the Work, Contractor shall assign a competent resident superintendent who shall not be replaced without written notice to Owner and Engineer except under extraordinary

circumstances. The superintendent will be Contractor's representative at the Site and shall have authority to act on behalf of Contractor. All communications given to or received from the superintendent shall be binding on Contractor.

6.02 *Labor; Working Hours*

A. Contractor shall provide competent, suitably qualified personnel to survey and lay out the Work and perform construction as required by the Contract Documents. Contractor shall at all times maintain good discipline and order at the Site.

B. Except as otherwise required for the safety or protection of persons or the Work or property at the Site or adjacent thereto, and except as otherwise stated in the Contract Documents, all Work at the Site shall be performed during regular working hours. Contractor will not permit the performance of Work on a Saturday, Sunday, or any legal holiday without Owner's written consent (which will not be unreasonably withheld) given after prior written notice to Engineer.

6.03 *Services, Materials, and Equipment*

A. Unless otherwise specified in the Contract Documents, Contractor shall provide and assume full responsibility for all services, materials, equipment, labor, transportation, construction equipment and machinery, tools, appliances, fuel, power, light, heat, telephone, water, sanitary facilities, temporary facilities, and all other facilities and incidentals necessary for the performance, testing, start-up, and completion of the Work.

B. All materials and equipment incorporated into the Work shall be as specified or, if not specified, shall be of good quality and new, except as otherwise provided in the Contract Documents. All special warranties and guarantees required by the Specifications shall expressly run to the benefit of Owner. If required by Engineer, Contractor shall furnish satisfactory evidence (including reports of required tests) as to the source, kind, and quality of materials and equipment.

C. All materials and equipment shall be stored, applied, installed, connected, erected, protected, used, cleaned, and conditioned in accordance with instructions of the applicable Supplier, except as otherwise may be provided in the Contract Documents.

6.04 *Progress Schedule*

A. Contractor shall adhere to the Progress Schedule established in accordance with Paragraph 2.07 as it may be adjusted from time to time as provided below.

1. Contractor shall submit to Engineer for acceptance (to the extent indicated in Paragraph 2.07) proposed adjustments in the Progress Schedule that will not result in changing the Contract Times. Such adjustments will comply with any provisions of the General Requirements applicable thereto.

2. Proposed adjustments in the Progress Schedule that will change the Contract Times shall be submitted in accordance with the requirements of Article 12. Adjustments in Contract Times may only be made by a Change Order.

6.05 *Substitutes and "Or-Equals"*

A. Whenever an item of material or equipment is specified or described in the Contract Documents by using the name of a proprietary item or the name of a particular Supplier, the specification or description is intended to establish the type, function, appearance, and quality required. Unless the specification or description contains or is followed by words reading that no like, equivalent, or "or-equal" item or no substitution is permitted, other items of material or equipment or material or equipment of other Suppliers may be submitted to Engineer for review under the circumstances described below.

1. *"Or-Equal" Items:* If in Engineer's sole discretion an item of material or equipment proposed by Contractor is functionally equal to that named and sufficiently similar so that no change in related Work will be required, it may be considered by Engineer as an "or-equal" item, in which case review and approval of the proposed item may, in Engineer's sole discretion, be accomplished without compliance with some or all of the requirements for approval of proposed substitute items. For the purposes of this Paragraph 6.05.A.1, a proposed item of material or equipment will be considered functionally equal to an item so named if:

a. in the exercise of reasonable judgment Engineer determines that:

1) it is at least equal in materials of construction, quality, durability, appearance, strength, and design characteristics;

2) it will reliably perform at least equally well the function and achieve the results imposed by the design concept of the completed Project as a functioning whole,

3) it has a proven record of performance and availability of responsive service; and

b. Contractor certifies that, if approved and incorporated into the Work:

1) there will be no increase in cost to the Owner or increase in Contract Times, and

2) it will conform substantially to the detailed requirements of the item named in the Contract Documents.

2. Substitute Items

a. If in Engineer's sole discretion an item of material or equipment proposed by Contractor does not qualify as an "or-equal" item under Paragraph 6.05.A.1, it will be considered a proposed substitute item.

b. Contractor shall submit sufficient information as provided below to allow Engineer to determine that the item of material or equipment proposed is essentially equivalent to that named and an acceptable substitute therefor. Requests for review of proposed substitute items of material or equipment will not be accepted by Engineer from anyone other than Contractor.

c. The requirements for review by Engineer will be as set forth in Paragraph 6.05.A.2.d, as supplemented in the General Requirements and as Engineer may decide is appropriate under the circumstances.

d. Contractor shall make written application to Engineer for review of a proposed substitute item of material or equipment that Contractor seeks to furnish or use. The application:

1) shall certify that the proposed substitute item will:

a) perform adequately the functions and achieve the results called for by the general design,

b) be similar in substance to that specified, and

c) be suited to the same use as that specified;

2) will state:

a) the extent, if any, to which the use of the proposed substitute item will prejudice Contractor's achievement of Substantial Completion on time;

b) whether or not use of the proposed substitute item in the Work will require a change in any of the Contract Documents (or in the provisions of any other direct contract with Owner for other work on the Project) to adapt the design to the proposed substitute item; and

c) whether or not incorporation or use of the proposed substitute item in connection with the Work is subject to payment of any license fee or royalty;

3) will identify:

a) all variations of the proposed substitute item from that specified , and

b) available engineering, sales, maintenance, repair, and replacement services;

4) and shall contain an itemized estimate of all costs or credits that will result directly or indirectly from use of such substitute item, including costs of redesign and claims of other contractors affected by any resulting change,

B. *Substitute Construction Methods or Procedures:* If a specific means, method, technique, sequence, or procedure of construction is expressly required by the Contract Documents, Contractor may furnish or utilize a substitute means, method, technique, sequence, or procedure of construction approved by Engineer. Contractor shall submit sufficient information to allow Engineer, in Engineer's sole discretion, to determine that the substitute proposed is equivalent to that expressly called for by the Contract Documents. The requirements for review by Engineer will be similar to those provided in Paragraph 6.05.A.2.

C. *Engineer's Evaluation:* Engineer will be allowed a reasonable time within which to evaluate each proposal or submittal made pursuant to Paragraphs 6.05.A and 6.05.B. Engineer may require Contractor to furnish additional data about the proposed substitute item. Engineer will be the sole judge of acceptability. No "or-equal" or substitute will be ordered, installed or utilized until Engineer's review is complete, which will be evidenced by either a Change Order for a substitute or an approved Shop Drawing for an "or-equal." Engineer will advise Contractor in writing of any negative determination.

D. *Special Guarantee:* Owner may require Contractor to furnish at Contractor's expense a special performance guarantee or other surety with respect to any substitute.

E. *Engineer's Cost Reimbursement*: Engineer will record Engineer's costs in evaluating a substitute proposed or submitted by Contractor pursuant to Paragraphs 6.05.A.2 and 6.05.B Whether or not Engineer approves a substitute item so proposed or submitted by Contractor, Contractor shall reimburse Owner for the charges of Engineer for evaluating each such proposed substitute. Contractor shall also reimburse Owner for the charges of Engineer for making changes in the Contract Documents (or in the provisions of any other direct contract with Owner) resulting from the acceptance of each proposed substitute.

F. *Contractor's Expense*: Contractor shall provide all data in support of any proposed substitute or "or-equal" at Contractor's expense.

6.06 *Concerning Subcontractors, Suppliers, and Others*

A. Contractor shall not employ any Subcontractor, Supplier, or other individual or entity (including those acceptable to Owner as indicated in Paragraph 6.06.B), whether initially or as a replacement, against whom Owner may have reasonable objection. Contractor shall not be required to employ any Subcontractor, Supplier, or other individual or entity to furnish or perform any of the Work against whom Contractor has reasonable objection.

B. If the Supplementary Conditions require the identity of certain Subcontractors, Suppliers, or other individuals or entities to be submitted to Owner in advance for acceptance by Owner by a specified date prior to the Effective Date of the Agreement, and if Contractor has submitted a list thereof in accordance with the Supplementary Conditions, Owner's acceptance (either in writing or by failing to make written objection thereto by the date indicated for acceptance or objection in the Bidding Documents or the Contract Documents) of any such Subcontractor, Supplier, or other individual or entity so identified may be revoked on the basis of reasonable objection after due investigation. Contractor shall submit an acceptable replacement for the rejected Subcontractor, Supplier, or other individual or entity, and the Contract Price will be adjusted by the difference in the cost occasioned by such replacement, and an appropriate Change Order will be issued . No acceptance by Owner of any such Subcontractor, Supplier, or other individual or entity, whether initially or as a replacement, shall constitute a waiver of any right of Owner or Engineer to reject defective Work.

C. Contractor shall be fully responsible to Owner and Engineer for all acts and omissions of the Subcontractors, Suppliers, and other individuals or entities performing or furnishing any of the Work just as Contractor is responsible for Contractor's own acts and omissions. Nothing in the Contract Documents:

1. shall create for the benefit of any such Subcontractor, Supplier, or other individual or entity any contractual relationship between Owner or Engineer and any such Subcontractor, Supplier or other individual or entity, nor

2. shall create any obligation on the part of Owner or Engineer to pay or to see to the payment of any moneys due any such Subcontractor, Supplier, or other individual or entity except as may otherwise be required by Laws and Regulations.

D. Contractor shall be solely responsible for scheduling and coordinating the Work of Subcontractors, Suppliers, and other individuals or entities performing or furnishing any of the Work under a direct or indirect contract with Contractor.

E. Contractor shall require all Subcontractors, Suppliers, and such other individuals or entities performing or furnishing any of the Work to communicate with Engineer through Contractor.

F. The divisions and sections of the Specifications and the identifications of any Drawings shall not control Contractor in dividing the Work among Subcontractors or Suppliers or delineating the Work to be performed by any specific trade.

G. All Work performed for Contractor by a Subcontractor or Supplier will be pursuant to an appropriate agreement between Contractor and the Subcontractor or Supplier which specifically binds the Subcontractor or Supplier to the applicable terms and conditions of the Contract Documents for the benefit of Owner and Engineer. Whenever any such agreement is with a Subcontractor or Supplier who is listed as an additional insured on the property insurance provided in Paragraph 5.06, the agreement between the Contractor and the Subcontractor or Supplier will contain provisions whereby the Subcontractor or Supplier waives all rights against Owner, Contractor, and Engineer,, and all other individuals or entities identified in the Supplementary Conditions to be listed as insureds or additional insureds (and the officers, directors, partners, employees, agents, consultants and subcontractors of each and any of them) for all losses and damages caused by, arising out of, relating to, or resulting from any of the perils or causes of loss covered by such policies and any other property insurance applicable to the Work. If the insurers on any such policies require separate waiver forms to be signed by any Subcontractor or Supplier, Contractor will obtain the same.

6.07 *Patent Fees and Royalties*

A. Contractor shall pay all license fees and royalties and assume all costs incident to the use in the performance of the Work or the incorporation in the Work of any invention, design, process, product, or device which is the subject of patent rights or copyrights held by others. If a particular invention, design, process, product, or device is specified in the Contract Documents for use in the performance of the Work and if to the actual knowledge of Owner or Engineer its use is subject to patent rights or copyrights calling for the payment of any license fee or royalty to others, the existence of such rights shall be disclosed by Owner in the Contract Documents.

B. To the fullest extent permitted by Laws and Regulations, Contractor shall indemnify and hold harmless Owner and Engineer, and the officers, directors, partners, employees, agents, consultants and subcontractors of each and any of them from and against all claims, costs, losses, and damages (including but not limited to all fees and charges of engineers, architects, attorneys, and other professionals and all court or arbitration or other dispute resolution costs) arising out of or relating to any infringement of patent rights or copyrights incident to the use in the performance of the Work or resulting from the incorporation in the Work of any invention, design, process, product, or device not specified in the Contract Documents.

6.08 *Permits*

A. Unless otherwise provided in the Supplementary Conditions, Contractor shall obtain and pay for all construction permits and licenses. Owner shall assist Contractor, when necessary, in obtaining such permits and licenses. Contractor shall pay all governmental charges and inspection fees necessary for the prosecution of the Work which are applicable at the time of opening of Bids, or, if there are no Bids, on the Effective Date of the Agreement. Owner shall pay all charges of utility owners for connections for providing permanent service to the Work.

6.09 *Laws and Regulations*

A. Contractor shall give all notices required by and shall comply with all Laws and Regulations applicable to the performance of the Work. Except where otherwise expressly required by applicable Laws and Regulations, neither Owner nor Engineer shall be responsible for monitoring Contractor's compliance with any Laws or Regulations.

B. If Contractor performs any Work knowing or having reason to know that it is contrary to Laws or Regulations, Contractor shall bear all claims, costs, losses, and damages (including but not limited to all fees and charges of engineers, architects, attorneys, and other professionals and all court or arbitration or other dispute resolution costs) arising out of or relating to such Work. However, it shall not be Contractor's primary responsibility to make certain that the Specifications and Drawings are in accordance with Laws and Regulations, but this shall not relieve Contractor of Contractor's obligations under Paragraph 3.03.

C. Changes in Laws or Regulations not known at the time of opening of Bids (or, on the Effective Date of the Agreement if there were no Bids) having an effect on the cost or time of performance of the Work shall be the subject of an adjustment in Contract Price or Contract Times. If Owner and Contractor are unable to agree on entitlement to or on the amount or extent, if any, of any such adjustment, a Claim may be made therefor as provided in Paragraph 10.05.

6.10 *Taxes*

A. Contractor shall pay all sales, consumer, use, and other similar taxes required to be paid by Contractor in accordance with the Laws and Regulations of the place of the Project which are applicable during the performance of the Work.

6.11 *Use of Site and Other Areas*

A. Limitation on Use of Site and Other Areas

1. Contractor shall confine construction equipment, the storage of materials and equipment, and the operations of workers to the Site and other areas permitted by Laws and Regulations, and shall not unreasonably encumber the Site and other areas with construction equipment or other materials or equipment. Contractor shall assume full responsibility for any damage to any such land or area, or to the owner or occupant thereof, or of any adjacent land or areas resulting from the performance of the Work.

2. Should any claim be made by any such owner or occupant because of the performance of the Work, Contractor shall promptly settle with such other party by negotiation or otherwise resolve the claim by arbitration or other dispute resolution proceeding or at law.

3. To the fullest extent permitted by Laws and Regulations, Contractor shall indemnify and hold harmless Owner and Engineer, and the officers, directors, partners, employees, agents, consultants and subcontractors of each and any of them from and against all claims, costs, losses, and damages (including but not limited to all fees and charges of engineers, architects, attorneys, and other professionals and all court or arbitration or other dispute resolution costs) arising out of

or relating to any claim or action, legal or equitable, brought by any such owner or occupant against Owner, Engineer, or any other party indemnified hereunder to the extent caused by or based upon Contractor's performance of the Work.

B. *Removal of Debris During Performance of the Work:* During the progress of the Work Contractor shall keep the Site and other areas free from accumulations of waste materials, rubbish, and other debris. Removal and disposal of such waste materials, rubbish, and other debris shall conform to applicable Laws and Regulations.

C. *Cleaning:* Prior to Substantial Completion of the Work Contractor shall clean the Site and the Work and make it ready for utilization by Owner. At the completion of the Work Contractor shall remove from the Site all tools, appliances, construction equipment and machinery, and surplus materials and shall restore to original condition all property not designated for alteration by the Contract Documents.

D. *Loading Structures:* Contractor shall not load nor permit any part of any structure to be loaded in any manner that will endanger the structure, nor shall Contractor subject any part of the Work or adjacent property to stresses or pressures that will endanger it.

6.12 *Record Documents*

A. Contractor shall maintain in a safe place at the Site one record copy of all Drawings, Specifications, Addenda, Change Orders, Work Change Directives, Field Orders, and written interpretations and clarifications in good order and annotated to show changes made during construction. These record documents together with all approved Samples and a counterpart of all approved Shop Drawings will be available to Engineer for reference. Upon completion of the Work, these record documents, Samples, and Shop Drawings will be delivered to Engineer for Owner.

6.13 *Safety and Protection*

A. Contractor shall be solely responsible for initiating, maintaining and supervising all safety precautions and programs in connection with the Work. Contractor shall take all necessary precautions for the safety of, and shall provide the necessary protection to prevent damage, injury or loss to:

1. all persons on the Site or who may be affected by the Work;

2. all the Work and materials and equipment to be incorporated therein, whether in storage on or off the Site; and

3. other property at the Site or adjacent thereto, including trees, shrubs, lawns, walks, pavements, roadways, structures, utilities, and Underground Facilities not designated for removal, relocation, or replacement in the course of construction.

B. Contractor shall comply with all applicable Laws and Regulations relating to the safety of persons or property, or to the protection of persons or property from damage, injury, or loss; and shall erect and maintain all necessary safeguards for such safety and protection. Contractor shall notify owners of adjacent property and of Underground Facilities and other utility owners when prosecution of the Work may affect them, and shall cooperate with them in the protection, removal, relocation, and replacement of their property.

C. All damage, injury, or loss to any property referred to in Paragraph 6.13.A.2 or 6.13.A.3 caused, directly or indirectly, in whole or in part, by Contractor, any Subcontractor, Supplier, or any other individual or entity directly or indirectly employed by any of them to perform any of the Work, or anyone for whose acts any of them may be liable, shall be remedied by Contractor (except damage or loss attributable to the fault of Drawings or Specifications or to the acts or omissions of Owner or Engineer or , or anyone employed by any of them, or anyone for whose acts any of them may be liable, and not attributable, directly or indirectly, in whole or in part, to the fault or negligence of Contractor or any Subcontractor, Supplier, or other individual or entity directly or indirectly employed by any of them).

D. Contractor’s duties and responsibilities for safety and for protection of the Work shall continue until such time as all the Work is completed and Engineer has issued a notice to Owner and Contractor in accordance with Paragraph 14.07.B that the Work is acceptable (except as otherwise expressly provided in connection with Substantial Completion).

6.14 *Safety Representative*

A. Contractor shall designate a qualified and experienced safety representative at the Site whose duties and responsibilities shall be the prevention of accidents and the maintaining and supervising of safety precautions and programs.

6.15 *Hazard Communication Programs*

A. Contractor shall be responsible for coordinating any exchange of material safety data sheets or other hazard communication information required to be made available to or exchanged between or among employers at the Site in accordance with Laws or Regulations.

6.16 *Emergencies*

A. In emergencies affecting the safety or protection of persons or the Work or property at the Site or adjacent thereto, Contractor is obligated to act to prevent threatened damage, injury, or loss. Contractor shall give Engineer prompt written notice if Contractor believes that any significant changes in the Work or variations from the Contract Documents have been caused thereby or are required as a result thereof. If Engineer determines that a change in the Contract Documents is required because of the action taken by Contractor in response to such an emergency, a Work Change Directive or Change Order will be issued.

6.17 *Shop Drawings and Samples*

A. Contractor shall submit Shop Drawings and Samples to Engineer for review and approval in accordance with the acceptable Schedule of Submittals (as required by Paragraph 2.07). Each submittal will be identified as Engineer may require.

1. Shop Drawings

a. Submit number of copies specified in the General Requirements.

b. Data shown on the Shop Drawings will be complete with respect to quantities, dimensions, specified performance and design criteria, materials, and similar data to show Engineer the services, materials, and equipment Contractor proposes to provide and to enable Engineer to review the information for the limited purposes required by Paragraph 6.17.D.

2. *Samples:* Contractor shall also submit Samples to Engineer for review and approval in accordance with the acceptable Schedule of Submittals.

a. Submit number of Samples specified in the Specifications.

b. Clearly identify each Sample as to material, Supplier, pertinent data such as catalog numbers, the use for which intended and other data as Engineer may require to enable Engineer to review the submittal for the limited purposes required by Paragraph 6.17.D.

B. Where a Shop Drawing or Sample is required by the Contract Documents or the Schedule of Submittals, any related Work performed prior to Engineer's review and approval of the pertinent submittal will be at the sole expense and responsibility of Contractor.

C. Submittal Procedures

1. Before submitting each Shop Drawing or Sample, Contractor shall have determined and verified:

a. all field measurements, quantities, dimensions, specified performance and design criteria, installation requirements, materials, catalog numbers, and similar information with respect thereto;

b. the suitability of all materials with respect to intended use, fabrication, shipping, handling, storage, assembly, and installation pertaining to the performance of the Work;

c. all information relative to Contractor's responsibilities for means, methods, techniques, sequences, and procedures of construction, and safety precautions and programs incident thereto; and

d. shall also have reviewed and coordinated each Shop Drawing or Sample with other Shop Drawings and Samples and with the requirements of the Work and the Contract Documents.

2. Each submittal shall bear a stamp or specific written certification that Contractor has satisfied Contractor's obligations under the Contract Documents with respect to Contractor's review and approval of that submittal.

3. With each submittal, Contractor shall give Engineer specific written notice of any variations that the Shop Drawing or Sample may have from the requirements of the Contract Documents. This notice shall be both a written communication separate from the Shop Drawing's or Sample Submittal; and, in addition, by a specific notation made on each Shop Drawing or Sample submitted to Engineer for review and approval of each such variation.

D. Engineer's Review

1. Engineer will provide timely review of Shop Drawings and Samples in accordance with the Schedule of Submittals acceptable to Engineer. Engineer's review and approval will be only to determine if the items covered by the submittals will, after installation or incorporation in the Work, conform to the information given in the Contract Documents and be compatible with the design concept of the completed Project as a functioning whole as indicated by the Contract Documents.

2. Engineer's review and approval will not extend to means, methods, techniques, sequences, or procedures of construction (except where a particular

means, method, technique, sequence, or procedure of construction is specifically and expressly called for by the Contract Documents) or to safety precautions or programs incident thereto. The review and approval of a separate item as such will not indicate approval of the assembly in which the item functions.

3. Engineer's review and approval shall not relieve Contractor from responsibility for any variation from the requirements of the Contract Documents unless Contractor has complied with the requirements of Paragraph 6.17.C.3 and Engineer has given written approval of each such variation by specific written notation thereof incorporated in or accompanying the Shop Drawing or Sample. Engineer's review and approval shall not relieve Contractor from responsibility for complying with the requirements of Paragraph 6.17.C.1.

E. Resubmittal Procedures

1. Contractor shall make corrections required by Engineer and shall return the required number of corrected copies of Shop Drawings and submit, as required, new Samples for review and approval. Contractor shall direct specific attention in writing to revisions other than the corrections called for by Engineer on previous submittals.

6.18 *Continuing the Work*

A. Contractor shall carry on the Work and adhere to the Progress Schedule during all disputes or disagreements with Owner. No Work shall be delayed or postponed pending resolution of any disputes or disagreements, except as permitted by Paragraph 15.04 or as Owner and Contractor may otherwise agree in writing.

6.19 *Contractor's General Warranty and Guarantee*

A. Contractor warrants and guarantees to Owner that all Work will be in accordance with the Contract Documents and will not be defective. Engineer and its Related Entities shall be entitled to rely on representation of Contractor's warranty and guarantee.

B. Contractor's warranty and guarantee hereunder excludes defects or damage caused by:

1. abuse, modification, or improper maintenance or operation by persons other than Contractor, Subcontractors, Suppliers, or any other individual or entity for whom Contractor is responsible; or

2. normal wear and tear under normal usage.

C. Contractor's obligation to perform and complete the Work in accordance with the Contract Documents shall be absolute. None of the following will constitute an acceptance of Work that is not in accordance with the Contract Documents or a release of Contractor's obligation to perform the Work in accordance with the Contract Documents:

1. observations by Engineer;

2. recommendation by Engineer or payment by Owner of any progress or final payment;

3. the issuance of a certificate of Substantial Completion by Engineer or any payment related thereto by Owner;

4. use or occupancy of the Work or any part thereof by Owner;

5. any review and approval of a Shop Drawing or Sample submittal or the issuance of a notice of acceptability by Engineer;

6. any inspection, test, or approval by others; or

7. any correction of defective Work by Owner.

6.20 *Indemnification*

A. To the fullest extent permitted by Laws and Regulations, Contractor shall indemnify and hold harmless Owner and Engineer, and the officers, directors, partners, employees, agents, consultants and subcontractors of each and any of them from and against all claims, costs, losses, and damages (including but not limited to all fees and charges of engineers, architects, attorneys, and other professionals and all court or arbitration or other dispute resolution costs) arising out of or relating to the performance of the Work, provided that any such claim, cost, loss, or damage is attributable to bodily injury, sickness, disease, or death, or to injury to or destruction of tangible property (other than the Work itself), including the loss of use resulting therefrom but only to the extent caused by any negligent act or omission of Contractor, any Subcontractor, any Supplier, or any individual or entity directly or indirectly employed by any of them to perform any of the Work or anyone for whose acts any of them may be liable .

B. In any and all claims against Owner or Engineer or any of their respective consultants, agents, officers, directors, partners, or employees by any employee (or the survivor or personal representative of such employee) of Contractor, any Subcontractor, any Supplier, or any individual or entity directly or indirectly employed by any of them to perform any of the Work, or anyone for whose acts any of them may be liable, the indemnification obligation under Paragraph 6.20.A shall not be limited in any way by any limitation on the amount or type of damages, compensation, or benefits payable by

or for Contractor or any such Subcontractor, Supplier, or other individual or entity under workers' compensation acts, disability benefit acts, or other employee benefit acts.

C. The indemnification obligations of Contractor under Paragraph 6.20.A shall not extend to the liability of Engineer and Engineer's officers, directors, partners, employees, agents, consultants and subcontractors arising out of:

1. the preparation or approval of, or the failure to prepare or approve, maps, Drawings, opinions, reports, surveys, Change Orders, designs, or Specifications; or

2. giving directions or instructions, or failing to give them, if that is the primary cause of the injury or damage.

6.21 *Delegation of Professional Design Services*

A. Contractor will not be required to provide professional design services unless such services are specifically required by the Contract Documents for a portion of the Work or unless such services are required to carry out Contractor's responsibilities for construction means, methods, techniques, sequences and procedures. Contractor shall not be required to provide professional services in violation of applicable law.

B. If professional design services or certifications by a design professional related to systems, materials or equipment are specifically required of Contractor by the Contract Documents, Owner and Engineer will specify all performance and design criteria that such services must satisfy. Contractor shall cause such services or certifications to be provided by a properly licensed professional, whose signature and seal shall appear on all drawings, calculations, specifications, certifications, Shop Drawings and other submittals prepared by such professional. Shop Drawings and other submittals related to the Work designed or certified by such professional, if prepared by others, shall bear such professional's written approval when submitted to Engineer.

C. Owner and Engineer shall be entitled to rely upon the adequacy, accuracy and completeness of the services, certifications or approvals performed by such design professionals, provided Owner and Engineer have specified to Contractor all performance and design criteria that such services must satisfy.

D. Pursuant to this Paragraph 6.21, Engineer's review and approval of design calculations and design drawings will be only for the limited purpose of checking for conformance with performance and design criteria given and the design concept expressed in the Contract Documents. Engineer's review and approval of Shop Drawings and other submittals (except design calculations and design drawings) will be only for the purpose stated in Paragraph 6.17.D.1.

E. Contractor shall not be responsible for the adequacy of the performance or design criteria required by the Contract Documents.

ARTICLE 7 - OTHER WORK AT THE SITE

7.01 *Related Work at Site*

A. Owner may perform other work related to the Project at the Site with Owner's employees, or via other direct contracts therefor, or have other work performed by utility owners. If such other work is not noted in the Contract Documents, then:

1. written notice thereof will be given to Contractor prior to starting any such other work; and

2. if Owner and Contractor are unable to agree on entitlement to or on the amount or extent, if any, of any adjustment in the Contract Price or Contract Times that should be allowed as a result of such other work, a Claim may be made therefor as provided in Paragraph 10.05.

B. Contractor shall afford each other contractor who is a party to such a direct contract, each utility owner and Owner, if Owner is performing other work with Owner's employees, proper and safe access to the Site, a reasonable opportunity for the introduction and storage of materials and equipment and the execution of such other work, and shall properly coordinate the Work with theirs. Contractor shall do all cutting, fitting, and patching of the Work that may be required to properly connect or otherwise make its several parts come together and properly integrate with such other work. Contractor shall not endanger any work of others by cutting, excavating, or otherwise altering their work and will only cut or alter their work with the written consent of Engineer and the others whose work will be affected. The duties and responsibilities of Contractor under this Paragraph are for the benefit of such utility owners and other contractors to the extent that there are comparable provisions for the benefit of Contractor in said direct contracts between Owner and such utility owners and other contractors.

C. If the proper execution or results of any part of Contractor's Work depends upon work performed by others under this Article 7, Contractor shall inspect such other work and promptly report to Engineer in writing any delays, defects, or deficiencies in such other work that render it unavailable or unsuitable for the proper

execution and results of Contractor's Work. Contractor's failure to so report will constitute an acceptance of such other work as fit and proper for integration with Contractor's Work except for latent defects and deficiencies in such other work.

7.02 *Coordination*

A. If Owner intends to contract with others for the performance of other work on the Project at the Site, the following will be set forth in Supplementary Conditions:

1. the individual or entity who will have authority and responsibility for coordination of the activities among the various contractors will be identified;

2. the specific matters to be covered by such authority and responsibility will be itemized; and

3. the extent of such authority and responsibilities will be provided.

B. Unless otherwise provided in the Supplementary Conditions, Owner shall have sole authority and responsibility for such coordination.

7.03 *Legal Relationships*

A. Paragraphs 7.01.A and 7.02 are not applicable for utilities not under the control of Owner.

B. Each other direct contract of Owner under Paragraph 7.01.A shall provide that the other contractor is liable to Owner and Contractor for the reasonable direct delay and disruption costs incurred by Contractor as a result of the other contractor's actions or inactions.

C. Contractor shall be liable to Owner and any other contractor for the reasonable direct delay and disruption costs incurred by such other contractor as a result of Contractor's action or inactions.

ARTICLE 8 - OWNER'S RESPONSIBILITIES

8.01 *Communications to Contractor*

A. Except as otherwise provided in these General Conditions, Owner shall issue all communications to Contractor through Engineer.

8.02 *Replacement of Engineer*

A. In case of termination of the employment of Engineer, Owner shall appoint an engineer to whom Contractor makes no reasonable objection, whose status under the Contract Documents shall be that of the former Engineer.

8.03 *Furnish Data*

A. Owner shall promptly furnish the data required of Owner under the Contract Documents.

8.04 *Pay When Due*

A. Owner shall make payments to Contractor when they are due as provided in Paragraphs 14.02.C and 14.07.C.

8.05 *Lands and Easements; Reports and Tests*

A. Owner's duties in respect of providing lands and easements and providing engineering surveys to establish reference points are set forth in Paragraphs 4.01 and 4.05. Paragraph 4.02 refers to Owner's identifying and making available to Contractor copies of reports of explorations and tests of subsurface conditions and drawings of physical conditions in or relating to existing surface or subsurface structures at or contiguous to the Site that have been utilized by Engineer in preparing the Contract Documents.

8.06 *Insurance*

A. Owner's responsibilities, if any, in respect to purchasing and maintaining liability and property insurance are set forth in Article 5.

8.07 *Change Orders*

A. Owner is obligated to execute Change Orders as indicated in Paragraph 10.03.

8.08 *Inspections, Tests, and Approvals*

A. Owner's responsibility in respect to certain inspections, tests, and approvals is set forth in Paragraph 13.03.B.

8.09 *Limitations on Owner's Responsibilities*

A. The Owner shall not supervise, direct, or have control or authority over, nor be responsible for, Contractor's means, methods, techniques, sequences, or procedures of construction, or the safety precautions and programs incident thereto, or for any failure of Contractor to comply with Laws and Regulations applicable to the performance of the Work. Owner will not be responsible for Contractor's failure to perform the Work in accordance with the Contract Documents.

8.10 *Undisclosed Hazardous Environmental Condition*

A. Owner's responsibility in respect to an undisclosed Hazardous Environmental Condition is set forth in Paragraph 4.06.

8.11 *Evidence of Financial Arrangements*

A. If and to the extent Owner has agreed to furnish Contractor reasonable evidence that financial arrangements have been made to satisfy Owner's obligations under the Contract Documents, Owner's responsibility in respect thereof will be as set forth in the Supplementary Conditions.

ARTICLE 9 - ENGINEER'S STATUS DURING CONSTRUCTION

9.01 *Owner's Representative*

A. Engineer will be Owner's representative during the construction period. The duties and responsibilities and the limitations of authority of Engineer as Owner's representative during construction are set forth in the Contract Documents and will not be changed without written consent of Owner and Engineer.

9.02 *Visits to Site*

A. Engineer will make visits to the Site at intervals appropriate to the various stages of construction as Engineer deems necessary in order to observe as an experienced and qualified design professional the progress that has been made and the quality of the various aspects of Contractor's executed Work. Based on information obtained during such visits and observations, Engineer, for the benefit of Owner, will determine, in general, if the Work is proceeding in accordance with the Contract Documents. Engineer will not be required to make exhaustive or continuous inspections on the Site to check the quality or quantity of the Work. Engineer's efforts will be directed toward providing for Owner a greater degree of confidence that the completed Work will conform generally to the Contract Documents. On the basis of such visits and observations, Engineer will keep Owner informed of the progress of the Work and will endeavor to guard Owner against defective Work.

B. Engineer's visits and observations are subject to all the limitations on Engineer's authority and responsibility set forth in Paragraph 9.09. Particularly, but without limitation, during or as a result of Engineer's visits or observations of Contractor's Work Engineer will not supervise, direct, control, or have authority over or be responsible for Contractor's means, methods, techniques, sequences, or procedures of construction, or the safety precautions and programs incident thereto, or for any failure of Contractor to comply with Laws and Regulations applicable to the performance of the Work.

9.03 *Project Representative*

A. If Owner and Engineer agree, Engineer will furnish a Resident Project Representative to assist Engineer in providing more extensive observation of the Work. The authority and responsibilities of any such Resident Project Representative and assistants will be as provided in the Supplementary Conditions, and limitations on the responsibilities thereof will be as provided in Paragraph 9.09. If Owner designates another representative or agent to represent Owner at the Site who is not Engineer's consultant, agent or employee, the responsibilities and authority and limitations thereon of such other individual or entity will be as provided in the Supplementary Conditions.

9.04 *Authorized Variations in Work*

A. Engineer may authorize minor variations in the Work from the requirements of the Contract Documents which do not involve an adjustment in the Contract Price or the Contract Times and are compatible with the design concept of the completed Project as a functioning whole as indicated by the Contract Documents. These may be accomplished by a Field Order and will be binding on Owner and also on Contractor, who shall perform the Work involved promptly. If Owner or Contractor believes that a Field Order justifies an adjustment in the Contract Price or Contract Times, or both, and the parties are unable to agree on entitlement to or on the amount or extent, if any, of any such adjustment, a Claim may be made therefor as provided in Paragraph 10.05.

9.05 *Rejecting Defective Work*

A. Engineer will have authority to reject Work which Engineer believes to be defective, or that Engineer believes will not produce a completed Project that conforms to the Contract Documents or that will prejudice the integrity of the design concept of the completed Project as a functioning whole as indicated by the Contract Documents. Engineer will also have authority to require special inspection or testing of the Work as provided in Paragraph 13.04, whether or not the Work is fabricated, installed, or completed.

9.06 *Shop Drawings, Change Orders and Payments*

A. In connection with Engineer's authority, and limitations thereof, as to Shop Drawings and Samples, see Paragraph 6.17.

B. In connection with Engineer's authority, and limitations thereof, as to design calculations and design drawings submitted in response to a delegation of professional design services, if any, see Paragraph 6.21.

C. In connection with Engineer's authority as to Change Orders, see Articles 10, 11, and 12.

D. In connection with Engineer's authority as to Applications for Payment, see Article 14.

9.07 *Determinations for Unit Price Work*

A. Engineer will determine the actual quantities and classifications of Unit Price Work performed by Contractor. Engineer will review with Contractor the Engineer's preliminary determinations on such matters before rendering a written decision thereon (by recommendation of an Application for Payment or otherwise). Engineer's written decision thereon will be final and binding (except as modified by Engineer to reflect changed factual conditions or more accurate data) upon Owner and Contractor, subject to the provisions of Paragraph 10.05.

9.08 *Decisions on Requirements of Contract Documents and Acceptability of Work*

A. Engineer will be the initial interpreter of the requirements of the Contract Documents and judge of the acceptability of the Work thereunder. All matters in question and other matters between Owner and Contractor arising prior to the date final payment is due relating to the acceptability of the Work, and the interpretation of the requirements of the Contract Documents pertaining to the performance of the Work, will be referred initially to Engineer in writing within 30 days of the event giving rise to the question.

B. Engineer will, with reasonable promptness, render a written decision on the issue referred. If Owner or Contractor believe that any such decision entitles them to an adjustment in the Contract Price or Contract Times or both, a Claim may be made under Paragraph 10.05. The date of Engineer's decision shall be the date of the event giving rise to the issues referenced for the purposes of Paragraph 10.05.B.

C. Engineer's written decision on the issue referred will be final and binding on Owner and Contractor, subject to the provisions of Paragraph 10.05.

D. When functioning as interpreter and judge under this Paragraph 9.08, Engineer will not show partiality to Owner or Contractor and will not be liable in connection with any interpretation or decision rendered in good faith in such capacity.

9.09 *Limitations on Engineer's Authority and Responsibilities*

A. Neither Engineer's authority or responsibility under this Article 9 or under any other provision of the Contract Documents nor any decision made by Engineer in good faith either to exercise or not exercise such authority or responsibility or the undertaking, exercise, or performance of any authority or responsibility by Engineer shall create, impose, or give rise to any duty in contract, tort, or otherwise owed by Engineer to Contractor, any Subcontractor, any Supplier, any other individual or entity, or to any surety for or employee or agent of any of them.

B. Engineer will not supervise, direct, control, or have authority over or be responsible for Contractor's means, methods, techniques, sequences, or procedures of construction, or the safety precautions and programs incident thereto, or for any failure of Contractor to comply with Laws and Regulations applicable to the performance of the Work. Engineer will not be responsible for Contractor's failure to perform the Work in accordance with the Contract Documents.

C. Engineer will not be responsible for the acts or omissions of Contractor or of any Subcontractor, any Supplier, or of any other individual or entity performing any of the Work.

D. Engineer's review of the final Application for Payment and accompanying documentation and all maintenance and operating instructions, schedules, guarantees, bonds, certificates of inspection, tests and approvals, and other documentation required to be delivered by Paragraph 14.07.A will only be to determine generally that their content complies with the requirements of, and in the case of certificates of inspections, tests, and approvals that the results certified indicate compliance with the Contract Documents.

E. The limitations upon authority and responsibility set forth in this Paragraph 9.09 shall also apply to, the Resident Project Representative, if any, and assistants, if any.

ARTICLE 10 - CHANGES IN THE WORK; CLAIMS

10.01 *Authorized Changes in the Work*

A. Without invalidating the Contract and without notice to any surety, Owner may, at any time or from time to time, order additions, deletions, or revisions in the Work by a Change Order, or a Work Change Directive. Upon receipt of any such document, Contractor shall promptly proceed with the Work involved which will be

performed under the applicable conditions of the Contract Documents (except as otherwise specifically provided).

B. If Owner and Contractor are unable to agree on entitlement to, or on the amount or extent, if any, of an adjustment in the Contract Price or Contract Times, or both, that should be allowed as a result of a Work Change Directive, a Claim may be made therefor as provided in Paragraph 10.05.

10.02 *Unauthorized Changes in the Work*

A. Contractor shall not be entitled to an increase in the Contract Price or an extension of the Contract Times with respect to any work performed that is not required by the Contract Documents as amended, modified, or supplemented as provided in Paragraph 3.04, except in the case of an emergency as provided in Paragraph 6.16 or in the case of uncovering Work as provided in Paragraph 13.04.B.

10.03 *Execution of Change Orders*

A. Owner and Contractor shall execute appropriate Change Orders recommended by Engineer covering:

1. changes in the Work which are: (i) ordered by Owner pursuant to Paragraph 10.01.A, (ii) required because of acceptance of defective Work under Paragraph 13.08.A or Owner's correction of defective Work under Paragraph 13.09, or (iii) agreed to by the parties;

2. changes in the Contract Price or Contract Times which are agreed to by the parties, including any undisputed sum or amount of time for Work actually performed in accordance with a Work Change Directive; and

3. changes in the Contract Price or Contract Times which embody the substance of any written decision rendered by Engineer pursuant to Paragraph 10.05; provided that, in lieu of executing any such Change Order, an appeal may be taken from any such decision in accordance with the provisions of the Contract Documents and applicable Laws and Regulations, but during any such appeal, Contractor shall carry on the Work and adhere to the Progress Schedule as provided in Paragraph 6.18.A.

10.04 *Notification to Surety*

A. If notice of any change affecting the general scope of the Work or the provisions of the Contract Documents (including, but not limited to, Contract Price or Contract Times) is required by the provisions of any bond to be given to a surety, the giving of any such notice will be Contractor's responsibility. The amount of each applicable bond will be adjusted to reflect the effect of any such change.

10.05 *Claims*

A. *Engineer's Decision Required*: All Claims, except those waived pursuant to Paragraph 14.09, shall be referred to the Engineer for decision. A decision by Engineer shall be required as a condition precedent to any exercise by Owner or Contractor of any rights or remedies either may otherwise have under the Contract Documents or by Laws and Regulations in respect of such Claims.

B. *Notice:* Written notice stating the general nature of each Claim, shall be delivered by the claimant to Engineer and the other party to the Contract promptly (but in no event later than 30 days) after the start of the event giving rise thereto. The responsibility to substantiate a Claim shall rest with the party making the Claim. Notice of the amount or extent of the Claim, with supporting data shall be delivered to the Engineer and the other party to the Contract within 60 days after the start of such event (unless Engineer allows additional time for claimant to submit additional or more accurate data in support of such Claim). A Claim for an adjustment in Contract Price shall be prepared in accordance with the provisions of Paragraph 12.01.B. A Claim for an adjustment in Contract Time shall be prepared in accordance with the provisions of Paragraph 12.02.B. Each Claim shall be accompanied by claimant's written statement that the adjustment claimed is the entire adjustment to which the claimant believes it is entitled as a result of said event. The opposing party shall submit any response to Engineer and the claimant within 30 days after receipt of the claimant's last submittal (unless Engineer allows additional time).

C. *Engineer's Action*: Engineer will review each Claim and, within 30 days after receipt of the last submittal of the claimant or the last submittal of the opposing party, if any, take one of the following actions in writing:

1. deny the Claim in whole or in part,

2. approve the Claim, or

3. notify the parties that the Engineer is unable to resolve the Claim if, in the Engineer's sole discretion, it would be inappropriate for the Engineer to do so. For purposes of further resolution of the Claim, such notice shall be deemed a denial.

D. In the event that Engineer does not take action on a Claim within said 30 days, the Claim shall be deemed denied.

E. Engineer's written action under Paragraph 10.05.C or denial pursuant to Paragraphs 10.05.C.3 or

10.05.D will be final and binding upon Owner and Contractor, unless Owner or Contractor invoke the dispute resolution procedure set forth in Article 16 within 30 days of such action or denial.

F. No Claim for an adjustment in Contract Price or Contract Times will be valid if not submitted in accordance with this Paragraph 10.05.

ARTICLE 11 - COST OF THE WORK; ALLOWANCES; UNIT PRICE WORK

11.01 *Cost of the Work*

A. *Costs Included:* The term Cost of the Work means the sum of all costs, except those excluded in Paragraph 11.01.B, necessarily incurred and paid by Contractor in the proper performance of the Work. When the value of any Work covered by a Change Order or when a Claim for an adjustment in Contract Price is determined on the basis of Cost of the Work, the costs to be reimbursed to Contractor will be only those additional or incremental costs required because of the change in the Work or because of the event giving rise to the Claim. Except as otherwise may be agreed to in writing by Owner, such costs shall be in amounts no higher than those prevailing in the locality of the Project, shall include only the following items, and shall not include any of the costs itemized in Paragraph 11.01.B.

1. Payroll costs for employees in the direct employ of Contractor in the performance of the Work under schedules of job classifications agreed upon by Owner and Contractor. Such employees shall include, without limitation, superintendents, foremen, and other personnel employed full time at the Site. Payroll costs for employees not employed full time on the Work shall be apportioned on the basis of their time spent on the Work. Payroll costs shall include, but not be limited to, salaries and wages plus the cost of fringe benefits, which shall include social security contributions, unemployment, excise, and payroll taxes, workers' compensation, health and retirement benefits, bonuses, sick leave, vacation and holiday pay applicable thereto. The expenses of performing Work outside of regular working hours, on Saturday, Sunday, or legal holidays, shall be included in the above to the extent authorized by Owner.

2. Cost of all materials and equipment furnished and incorporated in the Work, including costs of transportation and storage thereof, and Suppliers' field services required in connection therewith. All cash discounts shall accrue to Contractor unless Owner deposits funds with Contractor with which to make payments, in which case the cash discounts shall accrue to Owner. All trade discounts, rebates and refunds and returns from sale of surplus materials and equipment shall accrue to Owner, and Contractor shall make provisions so that they may be obtained.

3. Payments made by Contractor to Subcontractors for Work performed by Subcontractors. If required by Owner, Contractor shall obtain competitive bids from subcontractors acceptable to Owner and Contractor and shall deliver such bids to Owner, who will then determine, with the advice of Engineer, which bids, if any, will be acceptable. If any subcontract provides that the Subcontractor is to be paid on the basis of Cost of the Work plus a fee, the Subcontractor's Cost of the Work and fee shall be determined in the same manner as Contractor's Cost of the Work and fee as provided in this Paragraph 11.01.

4. Costs of special consultants (including but not limited to engineers, architects, testing laboratories, surveyors, attorneys, and accountants) employed for services specifically related to the Work.

5. Supplemental costs including the following:

a. The proportion of necessary transportation, travel, and subsistence expenses of Contractor's employees incurred in discharge of duties connected with the Work.

b. Cost, including transportation and maintenance, of all materials, supplies, equipment, machinery, appliances, office, and temporary facilities at the Site, and hand tools not owned by the workers, which are consumed in the performance of the Work, and cost, less market value, of such items used but not consumed which remain the property of Contractor.

c. Rentals of all construction equipment and machinery, and the parts thereof whether rented from Contractor or others in accordance with rental agreements approved by Owner with the advice of Engineer, and the costs of transportation, loading, unloading, assembly, dismantling, and removal thereof. All such costs shall be in accordance with the terms of said rental agreements. The rental of any such equipment, machinery, or parts shall cease when the use thereof is no longer necessary for the Work.

d. Sales, consumer, use, and other similar taxes related to the Work, and for which Contractor is liable, imposed by Laws and Regulations.

e. Deposits lost for causes other than negligence of Contractor, any Subcontractor, or anyone directly or indirectly employed by any of them or

for whose acts any of them may be liable, and royalty payments and fees for permits and licenses.

f. Losses and damages (and related expenses) caused by damage to the Work, not compensated by insurance or otherwise, sustained by Contractor in connection with the performance of the Work (except losses and damages within the deductible amounts of property insurance established in accordance with Paragraph 5.06.D), provided such losses and damages have resulted from causes other than the negligence of Contractor, any Subcontractor, or anyone directly or indirectly employed by any of them or for whose acts any of them may be liable. Such losses shall include settlements made with the written consent and approval of Owner. No such losses, damages, and expenses shall be included in the Cost of the Work for the purpose of determining Contractor's fee.

g. The cost of utilities, fuel, and sanitary facilities at the Site.

h. Minor expenses such as telegrams, long distance telephone calls, telephone service at the Site, expresses, and similar petty cash items in connection with the Work.

i. The costs of premiums for all bonds and insurance Contractor is required by the Contract Documents to purchase and maintain.

B. *Costs Excluded:* The term Cost of the Work shall not include any of the following items:

1. Payroll costs and other compensation of Contractor's officers, executives, principals (of partnerships and sole proprietorships), general managers, safety managers, engineers, architects, estimators, attorneys, auditors, accountants, purchasing and contracting agents, expediters, timekeepers, clerks, and other personnel employed by Contractor, whether at the Site or in Contractor's principal or branch office for general administration of the Work and not specifically included in the agreed upon schedule of job classifications referred to in Paragraph 11.01.A.1 or specifically covered by Paragraph 11.01.A.4, all of which are to be considered administrative costs covered by the Contractor's fee.

2. Expenses of Contractor's principal and branch offices other than Contractor's office at the Site.

3. Any part of Contractor's capital expenses, including interest on Contractor's capital employed for the Work and charges against Contractor for delinquent payments.

4. Costs due to the negligence of Contractor, any Subcontractor, or anyone directly or indirectly employed by any of them or for whose acts any of them may be liable, including but not limited to, the correction of defective Work, disposal of materials or equipment wrongly supplied, and making good any damage to property.

5. Other overhead or general expense costs of any kind and the costs of any item not specifically and expressly included in Paragraphs 11.01.A and 11.01.B.

C. *Contractor's Fee:* When all the Work is performed on the basis of cost-plus, Contractor's fee shall be determined as set forth in the Agreement. When the value of any Work covered by a Change Order or when a Claim for an adjustment in Contract Price is determined on the basis of Cost of the Work, Contractor's fee shall be determined as set forth in Paragraph 12.01.C.

D. *Documentation:* Whenever the Cost of the Work for any purpose is to be determined pursuant to Paragraphs 11.01.A and 11.01.B, Contractor will establish and maintain records thereof in accordance with generally accepted accounting practices and submit in a form acceptable to Engineer an itemized cost breakdown together with supporting data.

11.02 *Allowances*

A. It is understood that Contractor has included in the Contract Price all allowances so named in the Contract Documents and shall cause the Work so covered to be performed for such sums and by such persons or entities as may be acceptable to Owner and Engineer.

B. Cash Allowances

1. Contractor agrees that:

a. the cash allowances include the cost to Contractor (less any applicable trade discounts) of materials and equipment required by the allowances to be delivered at the Site, and all applicable taxes; and

b. Contractor's costs for unloading and handling on the Site, labor, installation, overhead, profit, and other expenses contemplated for the cash allowances have been included in the Contract Price and not in the allowances, and no demand for additional payment on account of any of the foregoing will be valid.

C. Contingency Allowance

1. Contractor agrees that a contingency allowance, if any, is for the sole use of Owner to cover unanticipated costs.

D. Prior to final payment, an appropriate Change Order will be issued as recommended by Engineer to reflect actual amounts due Contractor on account of Work covered by allowances, and the Contract Price shall be correspondingly adjusted.

11.03 *Unit Price Work*

A. Where the Contract Documents provide that all or part of the Work is to be Unit Price Work, initially the Contract Price will be deemed to include for all Unit Price Work an amount equal to the sum of the unit price for each separately identified item of Unit Price Work times the estimated quantity of each item as indicated in the Agreement.

B. The estimated quantities of items of Unit Price Work are not guaranteed and are solely for the purpose of comparison of Bids and determining an initial Contract Price. Determinations of the actual quantities and classifications of Unit Price Work performed by Contractor will be made by Engineer subject to the provisions of Paragraph 9.07.

C. Each unit price will be deemed to include an amount considered by Contractor to be adequate to cover Contractor's overhead and profit for each separately identified item.

D. Owner or Contractor may make a Claim for an adjustment in the Contract Price in accordance with Paragraph 10.05 if:

1. the quantity of any item of Unit Price Work performed by Contractor differs materially and significantly from the estimated quantity of such item indicated in the Agreement; and

2. there is no corresponding adjustment with respect any other item of Work; and

3. Contractor believes that Contractor is entitled to an increase in Contract Price as a result of having incurred additional expense or Owner believes that Owner is entitled to a decrease in Contract Price and the parties are unable to agree as to the amount of any such increase or decrease.

ARTICLE 12 - CHANGE OF CONTRACT PRICE; CHANGE OF CONTRACT TIMES

12.01 *Change of Contract Price*

A. The Contract Price may only be changed by a Change Order. Any Claim for an adjustment in the Contract Price shall be based on written notice submitted by the party making the Claim to the Engineer and the other party to the Contract in accordance with the provisions of Paragraph 10.05.

B. The value of any Work covered by a Change Order or of any Claim for an adjustment in the Contract Price will be determined as follows:

1. where the Work involved is covered by unit prices contained in the Contract Documents, by application of such unit prices to the quantities of the items involved (subject to the provisions of Paragraph 11.03); or

2. where the Work involved is not covered by unit prices contained in the Contract Documents, by a mutually agreed lump sum (which may include an allowance for overhead and profit not necessarily in accordance with Paragraph 12.01.C.2); or

3. where the Work involved is not covered by unit prices contained in the Contract Documents and agreement to a lump sum is not reached under Paragraph 12.01.B.2, on the basis of the Cost of the Work (determined as provided in Paragraph 11.01) plus a Contractor's fee for overhead and profit (determined as provided in Paragraph 12.01.C).

C. *Contractor's Fee:* The Contractor's fee for overhead and profit shall be determined as follows:

1. a mutually acceptable fixed fee; or

2. if a fixed fee is not agreed upon, then a fee based on the following percentages of the various portions of the Cost of the Work:

a. for costs incurred under Paragraphs 11.01.A.1 and 11.01.A.2, the Contractor's fee shall be 15 percent;

b. for costs incurred under Paragraph 11.01.A.3, the Contractor's fee shall be five percent;

c. where one or more tiers of subcontracts are on the basis of Cost of the Work plus a fee and no fixed fee is agreed upon, the intent of Paragraph 12.01.C.2.a is that the Subcontractor who actually performs the Work, at whatever tier, will

be paid a fee of 15 percent of the costs incurred by such Subcontractor under Paragraphs 11.01.A.1 and 11.01.A.2 and that any higher tier Subcontractor and Contractor will each be paid a fee of five percent of the amount paid to the next lower tier Subcontractor;

d. no fee shall be payable on the basis of costs itemized under Paragraphs 11.01.A.4, 11.01.A.5, and 11.01.B;

e. the amount of credit to be allowed by Contractor to Owner for any change which results in a net decrease in cost will be the amount of the actual net decrease in cost plus a deduction in Contractor's fee by an amount equal to five percent of such net decrease; and

f. when both additions and credits are involved in any one change, the adjustment in Contractor's fee shall be computed on the basis of the net change in accordance with Paragraphs 12.01.C.2.a through 12.01.C.2.e, inclusive.

12.02 *Change of Contract Times*

A. The Contract Times may only be changed by a Change Order. Any Claim for an adjustment in the Contract Times shall be based on written notice submitted by the party making the Claim to the Engineer and the other party to the Contract in accordance with the provisions of Paragraph 10.05.

B. Any adjustment of the Contract Times covered by a Change Order or any Claim for an adjustment in the Contract Times will be determined in accordance with the provisions of this Article 12.

12.03 *Delays*

A. Where Contractor is prevented from completing any part of the Work within the Contract Times due to delay beyond the control of Contractor, the Contract Times will be extended in an amount equal to the time lost due to such delay if a Claim is made therefor as provided in Paragraph 12.02.A. Delays beyond the control of Contractor shall include, but not be limited to, acts or neglect by Owner, acts or neglect of utility owners or other contractors performing other work as contemplated by Article 7, fires, floods, epidemics, abnormal weather conditions, or acts of God.

B. If Owner, Engineer, or other contractors or utility owners performing other work for Owner as contemplated by Article 7, or anyone for whom Owner is responsible, delays, disrupts, or interferes with the performance or progress of the Work, then Contractor shall be entitled to an equitable adjustment in the Contract Price or the Contract Times, or both. Contractor's entitlement to an adjustment of the Contract Times is conditioned on such adjustment being essential to Contractor's ability to complete the Work within the Contract Times.

C. If Contractor is delayed in the performance or progress of the Work by fire, flood, epidemic, abnormal weather conditions, acts of God, acts or failures to act of utility owners not under the control of Owner, or other causes not the fault of and beyond control of Owner and Contractor, then Contractor shall be entitled to an equitable adjustment in Contract Times, if such adjustment is essential to Contractor's ability to complete the Work within the Contract Times. Such an adjustment shall be Contractor's sole and exclusive remedy for the delays described in this Paragraph 12.03.C.

D. Owner, Engineer and the Related Entities of each of them shall not be liable to Contractor for any claims, costs, losses, or damages (including but not limited to all fees and charges of engineers, architects, attorneys, and other professionals and all court or arbitration or other dispute resolution costs) sustained by Contractor on or in connection with any other project or anticipated project.

E. Contractor shall not be entitled to an adjustment in Contract Price or Contract Times for delays within the control of Contractor. Delays attributable to and within the control of a Subcontractor or Supplier shall be deemed to be delays within the control of Contractor.

ARTICLE 13 - TESTS AND INSPECTIONS; CORRECTION, REMOVAL OR ACCEPTANCE OF DEFECTIVE WORK

13.01 *Notice of Defects*

A. Prompt notice of all defective Work of which Owner or Engineer has actual knowledge will be given to Contractor. All defective Work may be rejected, corrected, or accepted as provided in this Article 13.

13.02 *Access to Work*

A. Owner, Engineer, their consultants and other representatives and personnel of Owner, independent testing laboratories, and governmental agencies with jurisdictional interests will have access to the Site and the Work at reasonable times for their observation, inspecting, and testing. Contractor shall provide them proper and safe conditions for such access and advise them of Contractor's Site safety procedures and programs so that they may comply therewith as applicable.

13.03 *Tests and Inspections*

A. Contractor shall give Engineer timely notice of readiness of the Work for all required inspections, tests, or approvals and shall cooperate with inspection and testing personnel to facilitate required inspections or tests.

B. Owner shall employ and pay for the services of an independent testing laboratory to perform all inspections, tests, or approvals required by the Contract Documents except:

1. for inspections, tests, or approvals covered by Paragraphs 13.03.C and 13.03.D below;

2. that costs incurred in connection with tests or inspections conducted pursuant to Paragraph 13.04.B shall be paid as provided in said Paragraph 13.04.C; and

3. as otherwise specifically provided in the Contract Documents.

C. If Laws or Regulations of any public body having jurisdiction require any Work (or part thereof) specifically to be inspected, tested, or approved by an employee or other representative of such public body, Contractor shall assume full responsibility for arranging and obtaining such inspections, tests, or approvals, pay all costs in connection therewith, and furnish Engineer the required certificates of inspection or approval.

D. Contractor shall be responsible for arranging and obtaining and shall pay all costs in connection with any inspections, tests, or approvals required for Owner's and Engineer's acceptance of materials or equipment to be incorporated in the Work; or acceptance of materials, mix designs, or equipment submitted for approval prior to Contractor's purchase thereof for incorporation in the Work. Such inspections, tests, or approvals shall be performed by organizations acceptable to Owner and Engineer.

E. If any Work (or the work of others) that is to be inspected, tested, or approved is covered by Contractor without written concurrence of Engineer, it must, if requested by Engineer, be uncovered for observation.

F. Uncovering Work as provided in Paragraph 13.03.E shall be at Contractor's expense unless Contractor has given Engineer timely notice of Contractor's intention to cover the same and Engineer has not acted with reasonable promptness in response to such notice.

13.04 *Uncovering Work*

A. If any Work is covered contrary to the written request of Engineer, it must, if requested by Engineer, be uncovered for Engineer's observation and replaced at Contractor's expense.

B. If Engineer considers it necessary or advisable that covered Work be observed by Engineer or inspected or tested by others, Contractor, at Engineer's request, shall uncover, expose, or otherwise make available for observation, inspection, or testing as Engineer may require, that portion of the Work in question, furnishing all necessary labor, material, and equipment.

C. If it is found that the uncovered Work is defective, Contractor shall pay all claims, costs, losses, and damages (including but not limited to all fees and charges of engineers, architects, attorneys, and other professionals and all court or arbitration or other dispute resolution costs) arising out of or relating to such uncovering, exposure, observation, inspection, and testing, and of satisfactory replacement or reconstruction (including but not limited to all costs of repair or replacement of work of others); and Owner shall be entitled to an appropriate decrease in the Contract Price. If the parties are unable to agree as to the amount thereof, Owner may make a Claim therefor as provided in Paragraph 10.05.

D. If, the uncovered Work is not found to be defective, Contractor shall be allowed an increase in the Contract Price or an extension of the Contract Times, or both, directly attributable to such uncovering, exposure, observation, inspection, testing, replacement, and reconstruction. If the parties are unable to agree as to the amount or extent thereof, Contractor may make a Claim therefor as provided in Paragraph 10.05.

13.05 *Owner May Stop the Work*

A. If the Work is defective, or Contractor fails to supply sufficient skilled workers or suitable materials or equipment, or fails to perform the Work in such a way that the completed Work will conform to the Contract Documents, Owner may order Contractor to stop the Work, or any portion thereof, until the cause for such order has been eliminated; however, this right of Owner to stop the Work shall not give rise to any duty on the part of Owner to exercise this right for the benefit of Contractor, any Subcontractor, any Supplier, any other individual or entity, or any surety for, or employee or agent of any of them.

13.06 *Correction or Removal of Defective Work*

A. Promptly after receipt of notice, Contractor shall correct all defective Work, whether or not fabricated, installed, or completed, or, if the Work has been rejected by Engineer, remove it from the Project and replace it with Work that is not defective. Contractor shall pay all claims, costs, losses, and damages (including but

not limited to all fees and charges of engineers, architects, attorneys, and other professionals and all court or arbitration or other dispute resolution costs) arising out of or relating to such correction or removal (including but not limited to all costs of repair or replacement of work of others).

B. When correcting defective Work under the terms of this Paragraph 13.06 or Paragraph 13.07, Contractor shall take no action that would void or otherwise impair Owner's special warranty and guarantee, if any, on said Work.

13.07 *Correction Period*

A. If within one year after the date of Substantial Completion (or such longer period of time as may be prescribed by the terms of any applicable special guarantee required by the Contract Documents) or by any specific provision of the Contract Documents, any Work is found to be defective, or if the repair of any damages to the land or areas made available for Contractor's use by Owner or permitted by Laws and Regulations as contemplated in Paragraph 6.11.A is found to be defective, Contractor shall promptly, without cost to Owner and in accordance with Owner's written instructions:

1. repair such defective land or areas; or

2. correct such defective Work; or

3. if the defective Work has been rejected by Owner, remove it from the Project and replace it with Work that is not defective, and

4. satisfactorily correct or repair or remove and replace any damage to other Work, to the work of others or other land or areas resulting therefrom.

B. If Contractor does not promptly comply with the terms of Owner's written instructions, or in an emergency where delay would cause serious risk of loss or damage, Owner may have the defective Work corrected or repaired or may have the rejected Work removed and replaced. All claims, costs, losses, and damages (including but not limited to all fees and charges of engineers, architects, attorneys, and other professionals and all court or arbitration or other dispute resolution costs) arising out of or relating to such correction or repair or such removal and replacement (including but not limited to all costs of repair or replacement of work of others) will be paid by Contractor.

C. In special circumstances where a particular item of equipment is placed in continuous service before Substantial Completion of all the Work, the correction period for that item may start to run from an earlier date if so provided in the Specifications.

D. Where defective Work (and damage to other Work resulting therefrom) has been corrected or removed and replaced under this Paragraph 13.07, the correction period hereunder with respect to such Work will be extended for an additional period of one year after such correction or removal and replacement has been satisfactorily completed.

E. Contractor's obligations under this Paragraph 13.07 are in addition to any other obligation or warranty. The provisions of this Paragraph 13.07 shall not be construed as a substitute for or a waiver of the provisions of any applicable statute of limitation or repose.

13.08 *Acceptance of Defective Work*

A. If, instead of requiring correction or removal and replacement of defective Work, Owner (and, prior to Engineer's recommendation of final payment, Engineer) prefers to accept it, Owner may do so. Contractor shall pay all claims, costs, losses, and damages (including but not limited to all fees and charges of engineers, architects, attorneys, and other professionals and all court or arbitration or other dispute resolution costs) attributable to Owner's evaluation of and determination to accept such defective Work (such costs to be approved by Engineer as to reasonableness) and the diminished value of the Work to the extent not otherwise paid by Contractor pursuant to this sentence. If any such acceptance occurs prior to Engineer's recommendation of final payment, a Change Order will be issued incorporating the necessary revisions in the Contract Documents with respect to the Work, and Owner shall be entitled to an appropriate decrease in the Contract Price, reflecting the diminished value of Work so accepted. If the parties are unable to agree as to the amount thereof, Owner may make a Claim therefore as provided in Paragraph 10.05. If the acceptance occurs after such recommendation, an appropriate amount will be paid by Contractor to Owner.

13.09 *Owner May Correct Defective Work*

A. If Contractor fails within a reasonable time after written notice from Engineer to correct defective Work or to remove and replace rejected Work as required by Engineer in accordance with Paragraph 13.06.A, or if Contractor fails to perform the Work in accordance with the Contract Documents, or if Contractor fails to comply with any other provision of the Contract Documents, Owner may, after seven days written notice to Contractor, correct or remedy any such deficiency.

B. In exercising the rights and remedies under this Paragraph 13.09, Owner shall proceed expeditiously. In connection with such corrective or remedial action,

Owner may exclude Contractor from all or part of the Site, take possession of all or part of the Work and suspend Contractor's services related thereto, take possession of Contractor's tools, appliances, construction equipment and machinery at the Site, and incorporate in the Work all materials and equipment stored at the Site or for which Owner has paid Contractor but which are stored elsewhere. Contractor shall allow Owner, Owner's representatives, agents and employees, Owner's other contractors, and Engineer and Engineer's consultants access to the Site to enable Owner to exercise the rights and remedies under this Paragraph.

C. All claims, costs, losses, and damages (including but not limited to all fees and charges of engineers, architects, attorneys, and other professionals and all court or arbitration or other dispute resolution costs) incurred or sustained by Owner in exercising the rights and remedies under this Paragraph 13.09 will be charged against Contractor, and a Change Order will be issued incorporating the necessary revisions in the Contract Documents with respect to the Work; and Owner shall be entitled to an appropriate decrease in the Contract Price. If the parties are unable to agree as to the amount of the adjustment, Owner may make a Claim therefor as provided in Paragraph 10.05. Such claims, costs, losses and damages will include but not be limited to all costs of repair, or replacement of work of others destroyed or damaged by correction, removal, or replacement of Contractor's defective Work.

D. Contractor shall not be allowed an extension of the Contract Times because of any delay in the performance of the Work attributable to the exercise by Owner of Owner's rights and remedies under this Paragraph 13.09.

ARTICLE 14 - PAYMENTS TO CONTRACTOR AND COMPLETION

14.01 *Schedule of Values*

A. The Schedule of Values established as provided in Paragraph 2.07.A will serve as the basis for progress payments and will be incorporated into a form of Application for Payment acceptable to Engineer. Progress payments on account of Unit Price Work will be based on the number of units completed.

14.02 *Progress Payments*

A. Applications for Payments

1. At least 20 days before the date established in the Agreement for each progress payment (but not more often than once a month), Contractor shall submit to Engineer for review an Application for Payment filled out and signed by Contractor covering the Work completed as of the date of the Application and accompanied by such supporting documentation as is required by the Contract Documents. If payment is requested on the basis of materials and equipment not incorporated in the Work but delivered and suitably stored at the Site or at another location agreed to in writing, the Application for Payment shall also be accompanied by a bill of sale, invoice, or other documentation warranting that Owner has received the materials and equipment free and clear of all Liens and evidence that the materials and equipment are covered by appropriate property insurance or other arrangements to protect Owner's interest therein, all of which must be satisfactory to Owner.

2. Beginning with the second Application for Payment, each Application shall include an affidavit of Contractor stating that all previous progress payments received on account of the Work have been applied on account to discharge Contractor's legitimate obligations associated with prior Applications for Payment.

3. The amount of retainage with respect to progress payments will be as stipulated in the Agreement.

B. *Review of Applications*

1. Engineer will, within 10 days after receipt of each Application for Payment, either indicate in writing a recommendation of payment and present the Application to Owner or return the Application to Contractor indicating in writing Engineer's reasons for refusing to recommend payment. In the latter case, Contractor may make the necessary corrections and resubmit the Application.

2. Engineer's recommendation of any payment requested in an Application for Payment will constitute a representation by Engineer to Owner, based on Engineer's observations on the Site of the executed Work as an experienced and qualified design professional and on Engineer's review of the Application for Payment and the accompanying data and schedules, that to the best of Engineer's knowledge, information and belief:

a. the Work has progressed to the point indicated;

b. the quality of the Work is generally in accordance with the Contract Documents (subject to an evaluation of the Work as a functioning whole prior to or upon Substantial Completion, to the results of any subsequent tests called for in the Contract Documents, to a final determination of quantities and classifications for Unit Price Work under

Paragraph 9.07, and to any other qualifications stated in the recommendation); and

c. the conditions precedent to Contractor's being entitled to such payment appear to have been fulfilled in so far as it is Engineer's responsibility to observe the Work.

3. By recommending any such payment Engineer will not thereby be deemed to have represented that:

a. inspections made to check the quality or the quantity of the Work as it has been performed have been exhaustive, extended to every aspect of the Work in progress, or involved detailed inspections of the Work beyond the responsibilities specifically assigned to Engineer in the Contract Documents; or

b. that there may not be other matters or issues between the parties that might entitle Contractor to be paid additionally by Owner or entitle Owner to withhold payment to Contractor.

4. Neither Engineer's review of Contractor's Work for the purposes of recommending payments nor Engineer's recommendation of any payment, including final payment, will impose responsibility on Engineer:

a. to supervise, direct, or control the Work, or

b. for the means, methods, techniques, sequences, or procedures of construction, or the safety precautions and programs incident thereto, or

c. for Contractor's failure to comply with Laws and Regulations applicable to Contractor's performance of the Work, or

d. to make any examination to ascertain how or for what purposes Contractor has used the moneys paid on account of the Contract Price, or

e. to determine that title to any of the Work, materials, or equipment has passed to Owner free and clear of any Liens.

5. Engineer may refuse to recommend the whole or any part of any payment if, in Engineer's opinion, it would be incorrect to make the representations to Owner stated in Paragraph 14.02.B.2. Engineer may also refuse to recommend any such payment or, because of subsequently discovered evidence or the results of subsequent inspections or tests, revise or revoke any such payment recommendation previously made, to such extent as may be necessary in Engineer's opinion to protect Owner from loss because:

a. the Work is defective, or completed Work has been damaged, requiring correction or replacement;

b. the Contract Price has been reduced by Change Orders;

c. Owner has been required to correct defective Work or complete Work in accordance with Paragraph 13.09; or

d. Engineer has actual knowledge of the occurrence of any of the events enumerated in Paragraph 15.02.A.

C. *Payment Becomes Due*

1. Ten days after presentation of the Application for Payment to Owner with Engineer's recommendation, the amount recommended will (subject to the provisions of Paragraph 14.02.D) become due, and when due will be paid by Owner to Contractor.

D. *Reduction in Payment*

1. Owner may refuse to make payment of the full amount recommended by Engineer because:

a. claims have been made against Owner on account of Contractor's performance or furnishing of the Work;

b. Liens have been filed in connection with the Work, except where Contractor has delivered a specific bond satisfactory to Owner to secure the satisfaction and discharge of such Liens;

c. there are other items entitling Owner to a set-off against the amount recommended; or

d. Owner has actual knowledge of the occurrence of any of the events enumerated in Paragraphs 14.02.B.5.a through 14.02.B.5.c or Paragraph 15.02.A.

2. If Owner refuses to make payment of the full amount recommended by Engineer, Owner will give Contractor immediate written notice (with a copy to Engineer) stating the reasons for such action and promptly pay Contractor any amount remaining after deduction of the amount so withheld. Owner shall promptly pay Contractor the amount so withheld, or any adjustment thereto agreed to by Owner and Contractor, when Contractor corrects to Owner's satisfaction the reasons for such action.

3. If it is subsequently determined that Owner's refusal of payment was not justified, the amount wrongfully withheld shall be treated as an amount due as determined by Paragraph 14.02.C.1.

14.03 *Contractor's Warranty of Title*

A. Contractor warrants and guarantees that title to all Work, materials, and equipment covered by any Application for Payment, whether incorporated in the Project or not, will pass to Owner no later than the time of payment free and clear of all Liens.

14.04 *Substantial Completion*

A. When Contractor considers the entire Work ready for its intended use Contractor shall notify Owner and Engineer in writing that the entire Work is substantially complete (except for items specifically listed by Contractor as incomplete) and request that Engineer issue a certificate of Substantial Completion.

B. Promptly after Contractor's notification, Owner, Contractor, and Engineer shall make an inspection of the Work to determine the status of completion. If Engineer does not consider the Work substantially complete, Engineer will notify Contractor in writing giving the reasons therefor.

C. If Engineer considers the Work substantially complete, Engineer will deliver to Owner a tentative certificate of Substantial Completion which shall fix the date of Substantial Completion. There shall be attached to the certificate a tentative list of items to be completed or corrected before final payment. Owner shall have seven days after receipt of the tentative certificate during which to make written objection to Engineer as to any provisions of the certificate or attached list. If, after considering such objections, Engineer concludes that the Work is not substantially complete, Engineer will within 14 days after submission of the tentative certificate to Owner notify Contractor in writing, stating the reasons therefor. If, after consideration of Owner's objections, Engineer considers the Work substantially complete, Engineer will within said 14 days execute and deliver to Owner and Contractor a definitive certificate of Substantial Completion (with a revised tentative list of items to be completed or corrected) reflecting such changes from the tentative certificate as Engineer believes justified after consideration of any objections from Owner.

D. At the time of delivery of the tentative certificate of Substantial Completion, Engineer will deliver to Owner and Contractor a written recommendation as to division of responsibilities pending final payment between Owner and Contractor with respect to security, operation, safety, and protection of the Work, maintenance, heat, utilities, insurance, and warranties and guarantees. Unless Owner and Contractor agree otherwise in writing and so inform Engineer in writing prior to Engineer's issuing the definitive certificate of Substantial Completion, Engineer's aforesaid recommendation will be binding on Owner and Contractor until final payment.

E. Owner shall have the right to exclude Contractor from the Site after the date of Substantial Completion subject to allowing Contractor reasonable access to complete or correct items on the tentative list.

14.05 *Partial Utilization*

A. Prior to Substantial Completion of all the Work, Owner may use or occupy any substantially completed part of the Work which has specifically been identified in the Contract Documents, or which Owner, Engineer, and Contractor agree constitutes a separately functioning and usable part of the Work that can be used by Owner for its intended purpose without significant interference with Contractor's performance of the remainder of the Work, subject to the following conditions.

1. Owner at any time may request Contractor in writing to permit Owner to use or occupy any such part of the Work which Owner believes to be ready for its intended use and substantially complete. If and when Contractor agrees that such part of the Work is substantially complete, Contractor will certify to Owner and Engineer that such part of the Work is substantially complete and request Engineer to issue a certificate of Substantial Completion for that part of the Work.

2. Contractor at any time may notify Owner and Engineer in writing that Contractor considers any such part of the Work ready for its intended use and substantially complete and request Engineer to issue a certificate of Substantial Completion for that part of the Work.

3. Within a reasonable time after either such request, Owner, Contractor, and Engineer shall make an inspection of that part of the Work to determine its status of completion. If Engineer does not consider that part of the Work to be substantially complete, Engineer will notify Owner and Contractor in writing giving the reasons therefor. If Engineer considers that part of the Work to be substantially complete, the provisions of Paragraph 14.04 will apply with respect to certification of Substantial Completion of that part of the Work and the division of responsibility in respect thereof and access thereto.

4. No use or occupancy or separate operation of part of the Work may occur prior to compliance with the requirements of Paragraph 5.10 regarding property insurance.

14.06 *Final Inspection*

A. Upon written notice from Contractor that the entire Work or an agreed portion thereof is complete, Engineer will promptly make a final inspection with Owner and Contractor and will notify Contractor in writing of all particulars in which this inspection reveals that the Work is incomplete or defective. Contractor shall immediately take such measures as are necessary to complete such Work or remedy such deficiencies.

14.07 *Final Payment*

A. Application for Payment

1. After Contractor has, in the opinion of Engineer, satisfactorily completed all corrections identified during the final inspection and has delivered, in accordance with the Contract Documents, all maintenance and operating instructions, schedules, guarantees, bonds, certificates or other evidence of insurance certificates of inspection, marked-up record documents (as provided in Paragraph 6.12), and other documents, Contractor may make application for final payment following the procedure for progress payments.

2. The final Application for Payment shall be accompanied (except as previously delivered) by:

a. all documentation called for in the Contract Documents, including but not limited to the evidence of insurance required by Paragraph 5.04.B.7;

b. consent of the surety, if any, to final payment;

c. a list of all Claims against Owner that Contractor believes are unsettled; and

d. complete and legally effective releases or waivers (satisfactory to Owner) of all Lien rights arising out of or Liens filed in connection with the Work.

3. In lieu of the releases or waivers of Liens specified in Paragraph 14.07.A.2 and as approved by Owner, Contractor may furnish receipts or releases in full and an affidavit of Contractor that: (i) the releases and receipts include all labor, services, material, and equipment for which a Lien could be filed; and (ii) all payrolls, material and equipment bills, and other indebtedness connected with the Work for which Owner or Owner's property might in any way be responsible have been paid or otherwise satisfied. If any Subcontractor or Supplier fails to furnish such a release or receipt in full, Contractor may furnish a bond or other collateral satisfactory to Owner to indemnify Owner against any Lien.

B. Engineer's Review of Application and Acceptance

1. If, on the basis of Engineer's observation of the Work during construction and final inspection, and Engineer's review of the final Application for Payment and accompanying documentation as required by the Contract Documents, Engineer is satisfied that the Work has been completed and Contractor's other obligations under the Contract Documents have been fulfilled, Engineer will, within ten days after receipt of the final Application for Payment, indicate in writing Engineer's recommendation of payment and present the Application for Payment to Owner for payment. At the same time Engineer will also give written notice to Owner and Contractor that the Work is acceptable subject to the provisions of Paragraph 14.09. Otherwise, Engineer will return the Application for Payment to Contractor, indicating in writing the reasons for refusing to recommend final payment, in which case Contractor shall make the necessary corrections and resubmit the Application for Payment.

C. Payment Becomes Due

1. Thirty days after the presentation to Owner of the Application for Payment and accompanying documentation, the amount recommended by Engineer, less any sum Owner is entitled to set off against Engineer's recommendation, including but not limited to liquidated damages, will become due and , will be paid by Owner to Contractor.

14.08 *Final Completion Delayed*

A. If, through no fault of Contractor, final completion of the Work is significantly delayed, and if Engineer so confirms, Owner shall, upon receipt of Contractor's final Application for Payment (for Work fully completed and accepted) and recommendation of Engineer, and without terminating the Contract, make payment of the balance due for that portion of the Work fully completed and accepted. If the remaining balance to be held by Owner for Work not fully completed or corrected is less than the retainage stipulated in the Agreement, and if bonds have been furnished as required in Paragraph 5.01, the written consent of the surety to the payment of the balance due for that portion of the Work fully completed and accepted shall be submitted by Contractor to Engineer with the Application for such payment. Such payment shall be made under the terms and conditions governing final payment, except that it shall not constitute a waiver of Claims.

14.09 *Waiver of Claims*

A. The making and acceptance of final payment will constitute:

1. a waiver of all Claims by Owner against Contractor, except Claims arising from unsettled Liens, from defective Work appearing after final inspection pursuant to Paragraph 14.06, from failure to comply with the Contract Documents or the terms of any special guarantees specified therein, or from Contractor's continuing obligations under the Contract Documents; and

2. a waiver of all Claims by Contractor against Owner other than those previously made in accordance with the requirements herein and expressly acknowledged by Owner in writing as still unsettled.

ARTICLE 15 - SUSPENSION OF WORK AND TERMINATION

15.01 *Owner May Suspend Work*

A. At any time and without cause, Owner may suspend the Work or any portion thereof for a period of not more than 90 consecutive days by notice in writing to Contractor and Engineer which will fix the date on which Work will be resumed. Contractor shall resume the Work on the date so fixed. Contractor shall be granted an adjustment in the Contract Price or an extension of the Contract Times, or both, directly attributable to any such suspension if Contractor makes a Claim therefor as provided in Paragraph 10.05.

15.02 *Owner May Terminate for Cause*

A. The occurrence of any one or more of the following events will justify termination for cause:

1. Contractor's persistent failure to perform the Work in accordance with the Contract Documents (including, but not limited to, failure to supply sufficient skilled workers or suitable materials or equipment or failure to adhere to the Progress Schedule established under Paragraph 2.07 as adjusted from time to time pursuant to Paragraph 6.04);

2. Contractor's disregard of Laws or Regulations of any public body having jurisdiction;

3. Contractor's disregard of the authority of Engineer; or

4. Contractor's violation in any substantial way of any provisions of the Contract Documents.

B. If one or more of the events identified in Paragraph 15.02.A occur, Owner may, after giving Contractor (and surety) seven days written notice of its intent to terminate the services of Contractor:

1. exclude Contractor from the Site, and take possession of the Work and of all Contractor's tools, appliances, construction equipment, and machinery at the Site, and use the same to the full extent they could be used by Contractor (without liability to Contractor for trespass or conversion),

2. incorporate in the Work all materials and equipment stored at the Site or for which Owner has paid Contractor but which are stored elsewhere, and

3. complete the Work as Owner may deem expedient.

C. If Owner proceeds as provided in Paragraph 15.02.B, Contractor shall not be entitled to receive any further payment until the Work is completed. If the unpaid balance of the Contract Price exceeds all claims, costs, losses, and damages (including but not limited to all fees and charges of engineers, architects, attorneys, and other professionals and all court or arbitration or other dispute resolution costs) sustained by Owner arising out of or relating to completing the Work, such excess will be paid to Contractor. If such claims, costs, losses, and damages exceed such unpaid balance, Contractor shall pay the difference to Owner. Such claims, costs, losses, and damages incurred by Owner will be reviewed by Engineer as to their reasonableness and, when so approved by Engineer, incorporated in a Change Order. When exercising any rights or remedies under this Paragraph Owner shall not be required to obtain the lowest price for the Work performed.

D. Notwithstanding Paragraphs 15.02.B and 15.02.C, Contractor's services will not be terminated if Contractor begins within seven days of receipt of notice of intent to terminate to correct its failure to perform and proceeds diligently to cure such failure within no more than 30 days of receipt of said notice.

E. Where Contractor's services have been so terminated by Owner, the termination will not affect any rights or remedies of Owner against Contractor then existing or which may thereafter accrue. Any retention or payment of moneys due Contractor by Owner will not release Contractor from liability.

F. If and to the extent that Contractor has provided a performance bond under the provisions of Paragraph 5.01.A, the termination procedures of that bond shall supersede the provisions of Paragraphs 15.02.B, and 15.02.C.

15.03 *Owner May Terminate For Convenience*

A. Upon seven days written notice to Contractor and Engineer, Owner may, without cause and without prejudice to any other right or remedy of Owner, terminate the Contract. In such case, Contractor shall be paid for (without duplication of any items):

1. completed and acceptable Work executed in accordance with the Contract Documents prior to the effective date of termination, including fair and reasonable sums for overhead and profit on such Work;

2. expenses sustained prior to the effective date of termination in performing services and furnishing labor, materials, or equipment as required by the Contract Documents in connection with uncompleted Work, plus fair and reasonable sums for overhead and profit on such expenses;

3. all claims, costs, losses, and damages (including but not limited to all fees and charges of engineers, architects, attorneys, and other professionals and all court or arbitration or other dispute resolution costs) incurred in settlement of terminated contracts with Subcontractors, Suppliers, and others; and

4. reasonable expenses directly attributable to termination.

B. Contractor shall not be paid on account of loss of anticipated profits or revenue or other economic loss arising out of or resulting from such termination.

15.04 *Contractor May Stop Work or Terminate*

A. If, through no act or fault of Contractor, (i) the Work is suspended for more than 90 consecutive days by Owner or under an order of court or other public authority, or (ii) Engineer fails to act on any Application for Payment within 30 days after it is submitted, or (iii) Owner fails for 30 days to pay Contractor any sum finally determined to be due, then Contractor may, upon seven days written notice to Owner and Engineer, and provided Owner or Engineer do not remedy such suspension or failure within that time, terminate the Contract and recover from Owner payment on the same terms as provided in Paragraph 15.03.

B. In lieu of terminating the Contract and without prejudice to any other right or remedy, if Engineer has failed to act on an Application for Payment within 30 days after it is submitted, or Owner has failed for 30 days to pay Contractor any sum finally determined to be due, Contractor may, seven days after written notice to Owner and Engineer, stop the Work until payment is made of all such amounts due Contractor, including interest thereon. The provisions of this Paragraph 15.04 are not intended to preclude Contractor from making a Claim under Paragraph 10.05 for an adjustment in Contract Price or Contract Times or otherwise for expenses or damage directly attributable to Contractor's stopping the Work as permitted by this Paragraph.

ARTICLE 16 - DISPUTE RESOLUTION

16.01 *Methods and Procedures*

A. Either Owner or Contractor may request mediation of any Claim submitted to Engineer for a decision under Paragraph 10.05 before such decision becomes final and binding. The mediation will be governed by the Construction Industry Mediation Rules of the American Arbitration Association in effect as of the Effective Date of the Agreement. The request for mediation shall be submitted in writing to the American Arbitration Association and the other party to the Contract. Timely submission of the request shall stay the effect of Paragraph 10.05.E.

B. Owner and Contractor shall participate in the mediation process in good faith. The process shall be concluded within 60 days of filing of the request. The date of termination of the mediation shall be determined by application of the mediation rules referenced above.

C. If the Claim is not resolved by mediation, Engineer's action under Paragraph 10.05.C or a denial pursuant to Paragraphs 10.05.C.3 or 10.05.D shall become final and binding 30 days after termination of the mediation unless, within that time period, Owner or Contractor:

1. elects in writing to invoke any dispute resolution process provided for in the Supplementary Conditions, or

2. agrees with the other party to submit the Claim to another dispute resolution process, or

3. gives written notice to the other party of their intent to submit the Claim to a court of competent jurisdiction.

ARTICLE 17 - MISCELLANEOUS

17.01 *Giving Notice*

A. Whenever any provision of the Contract Documents requires the giving of written notice, it will be deemed to have been validly given if:

1. delivered in person to the individual or to a member of the firm or to an officer of the corporation for whom it is intended, or

2. delivered at or sent by registered or certified mail, postage prepaid, to the last business address known to the giver of the notice.

17.02 *Computation of Times*

A. When any period of time is referred to in the Contract Documents by days, it will be computed to exclude the first and include the last day of such period. If the last day of any such period falls on a Saturday or Sunday or on a day made a legal holiday by the law of the applicable jurisdiction, such day will be omitted from the computation.

17.03 *Cumulative Remedies*

A. The duties and obligations imposed by these General Conditions and the rights and remedies available hereunder to the parties hereto are in addition to, and are not to be construed in any way as a limitation of, any rights and remedies available to any or all of them which are otherwise imposed or available by Laws or Regulations, by special warranty or guarantee, or by other provisions of the Contract Documents. The provisions of this Paragraph will be as effective as if repeated specifically in the Contract Documents in connection with each particular duty, obligation, right, and remedy to which they apply.

17.04 *Survival of Obligations*

A. All representations, indemnifications, warranties, and guarantees made in, required by, or given in accordance with the Contract Documents, as well as all continuing obligations indicated in the Contract Documents, will survive final payment, completion, and acceptance of the Work or termination or completion of the Contract or termination of the services of Contractor.

17.05 *Controlling Law*

A. This Contract is to be governed by the law of the state in which the Project is located.

17.06 *Headings*

A. Article and paragraph headings are inserted for convenience only and do not constitute parts of these General Conditions.

SUPPLEMENTARY CONDITIONS

REVISIONS AND ADDITIONS TO THE GENERAL CONDITIONS

The General Conditions are hereby revised as follows:

ARTICLE 1.01.A.19 "Engineer"

Add the following:

Wherever in these Documents the word "Engineer" appears, it shall be understood to mean the Construction Manager and their authorized representatives, acting either directly or indirectly as authorized agents of the Owner.

ARTICLE 1.01.A.29 "Owner"

Add the following:

Wherever in these Documents the word "Owner" appears, it shall be understood to mean the City of Key West whose address is 3140 Flagler Street, Key West, Florida 33040

SC-1.01.A.45. Supplement paragraph 1.01.A.43 of the General Conditions as follows:

Substantial Completion is further defined as (i) that degree of completion of the Project's operating facilities or systems sufficient to provide Owner the full time, uninterrupted, and continuous beneficial operation of the Work; and (ii) all required functional, performance and acceptance or startup testing has been successfully demonstrated for all components, devices, equipment, and instrumentation and control to the satisfaction of Engineer in accordance with the requirements of the Specifications.

SC-1.01.A.52. Add a new paragraph immediately following paragraph 1.01.A.52 of the General Conditions as follows:

1.01.A.53. *Specialist*—The term Specialist refers to a person, partnership, firm, or corporation of established reputation (or if newly organized, whose personnel have previously established a reputation in the same field), which is regularly engaged in, and which maintains a regular force of workers skilled in either (as applicable) manufacturing or fabricating items required by the Contract Documents, or otherwise performing Work required by the Contract Documents. Where the Specifications require the installation by a Specialist, that term shall also be deemed to mean either the manufacturer of the item, a person, partnership, firm, or corporation licensed by the manufacturer, or a person, partnership, firm, or corporation who will perform the Work under the manufacturer's direct supervision.

SC-2.03.A. Delete the third sentence of paragraph 2.03.A *Commencement of Contract Times: Notice to Proceed* of the General Conditions in its entirety.

©COPYRIGHT 2016 CH2M HILL

SC-2.07.A.4. “Contractor’s schedule of values shall be prepared as two separate schedules, one each for all work at Zero Duval and all work at Mallory Square.

ARTICLE 4.05 "REFERENCE POINTS"

Add the following:

It will be the Contractor's responsibility to layout the work and to transfer elevations from benchmarks. Where new construction connects to existing facilities, the Contractor shall check and establish the exact location prior to construction of the facilities.

The Contractor shall furnish all surveys, labor, and equipment, including setting all alignment and gradient, grade stakes, batter boards, and everything necessary to lay out his work. The Contractor shall be responsible for maintaining and re-establishing at his expense, all control points. After completion of his construction, he shall reset all permanent monuments at their original locations and elevations.

All layout work may be checked by the Engineer, and the Contractor shall furnish all necessary labor, equipment, and materials, and shall cooperate and assist the Engineer in making such checks.

The dimensions for lines and elevations for grades of the structures, appurtenances, and utilities will be shown on Drawings, together with other pertinent information required for laying out the work. If site conditions vary from those indicated, the Contractor shall notify the Engineer immediately, who will make any minor adjustment as required.

ARTICLE 5.03 “CERTIFICATES OF INSURANCE”

5.03.B. Delete 5.03.B in its entirety.

ARTICLE 5.04 "CONTRACTOR'S LIABILITY INSURANCE"

5.04A and 5.04.B Delete 5.04.A and 5.04.B in their entirety and Substitute the following:

A. CONTRACTOR is to secure, pay for, and file with the City of Key West, prior to commencing any work under the Contract, all certificates for Workers’ Compensation, Public Liability, and Property Damage Liability Insurance and such other insurance coverages as may be required by specifications and addenda thereto, in at least the following minimum amounts with specification amounts to prevail if greater than minimum amounts indicated. Notwithstanding any other provision of the Contract, the CONTRACTOR shall provide the minimum limits of liability insurance coverages as follows:

©COPYRIGHT 2016 CH2M HILL

Auto Liability	$1,000,000	Combined Single Limit
General Liability	$2,000,000	Aggregate (Per Project)
	$2,000,000	Products Aggregate
	$1,000,000	Any One Occurrence
	$1,000,000	Personal Injury
	$ 300,000	Fire Damage/Legal
Additional Umbrella Liability	$2,000,000	Occurrence/Aggregate

B. CONTRACTOR shall furnish an original Certificate of Insurance indicating, and such policy providing coverage to, City of Key West and CH2M HILL named as "Additional Insured" on PRIMARY and NON CONTRIBUTORY basis utilizing an ISO standard endorsement at least as broad as CG 2010 (11/85) or its Equivalent, (COMBINATION of CG 20 10 07 04 and CG 20 37 07 04, providing coverage for completed operations is acceptable) INCLUDING a "Waiver of Subrogation" clause in favor of City of Key West on all policies. CONTRACTOR will maintain the General Liability and Umbrella Liability insurance coverages summarized above with coverage continuing in full force including the "additional insured" endorsement until at least 3 years beyond completion and delivery of the work contracted herein.

C. Notwithstanding any other provision of the Contract, the CONTRACTOR shall maintain complete Workers' Compensation coverage for each and every employee, principal, officer, representative, or agent of the CONTRACTOR who is performing any labor, services, or material under the Contract. Further, CONTRACTOR shall additionally maintain the following minimum limits of coverage:

Bodily Injury Each Accident	$1,000,00
Bodily Injury by Disease Each Employee	$1,000,00
Bodily Injury by Disease Policy Limit	$1,000,00

D. As work being done is on or near a navigable waterway, CONTRACTOR's Workers' Compensation policy shall be endorsed to provide USL&H Act (WC 00 01 06 A) and Jones Act (WC 00 02 01 A) coverage as specified by the City of Key West. CONTRACTOR shall provide the City of Key West with a Certificate of Insurance verifying compliance with the workman's compensation coverage as set forth herein and shall provide as often as required by the City of Key West such certification which shall also show the insurance company, policy number, effective and expiration date, and the limits of workman's compensation coverage under each policy.

©COPYRIGHT 2016 CH2M HILL

E. CONTRACTOR's insurance policies shall be endorsed to give 30 days' written notice to the City of Key West in the event of cancellation or material change, using form CG 02 24, or its equivalent.

F. Certificates of Insurance submitted to the City of Key West will not be accepted without copies of the endorsements being requested. This includes additional insured endorsements, cancellation/material change notice endorsements, and waivers of subrogation. Copies of USL&H Act and Jones Act endorsements will also be required if necessary. PLEASE ADVISE YOUR INSURANCE AGENT ACCORDINGLY.

G. CONTRACTOR will comply with any and all safety regulations required by any agency or regulatory body including but not limited to OSHA. CONTRACTOR will notify City of Key West immediately by telephone at (305) 809-3811 of any accident or injury to anyone that occurs on the jobsite and is related to any of the work being performed by the CONTRACTOR.

H. SAMPLE ENDORSEMENTS REQUIRED BY ARTICLE 34 ARE INCLUDED IN BID PACKAGE AS EXHIBITS A-J to these supplementary conditions.

I. INDEMNIFICATION

Refer to Article 6.20 of the General Conditions as modified by these Supplementary Conditions (See 007300-7).

J. SURETY AND INSURER QUALIFICATIONS

1. All bonds, insurance contracts, and certificates of insurance shall be either executed by or countersigned by a licensed resident agent of the Surety or insurance company, having his place of business in the State of Florida, and in all ways complying with the insurance laws of the State of Florida. Further, the said Surety or insurance company shall be duly licensed and qualified to do business in the State of Florida.

ARTICLE 5.05 "OWNER'S LIABILITY INSURANCE"

5.05 Delete Article 5.05 in its entirety.

ARTICLE 5.06 "PROPERTY INSURANCE"

5.06 Delete Article 5.06 in its entirety.

ARTICLE 5.07 "WAIVER OF RIGHTS"

5.07.A. Delete Article 5.07.A in its entirety and Replace with the following:

©COPYRIGHT 2016 CH2M HILL

A. CONTRACTOR waives all rights against the OWNER, respective of officers, directors, partners, employees, agents, consultants and subcontractors of each and any of them for all losses and damages caused by, arising out of or resulting from any of the perils or causes of loss covered by such policies and any other property insurance applicable to the Work; and, in addition, waive all rights against the Engineer, and all other individuals or entities identified in the Supplementary Conditions to be listed as insured or additional insured (and the officers, directors, partners, employees, agents, consultants and subcontractors of each and any of them) under such policies for losses and damages so accused.

5.7.A. Delete Article 5.07.B. in its entirety.

5.7.B. Delete Article 5.07.C. in its entirety

ARTICLE 5.08 “RECEIPT AND APPLICATION OF INSURANCE PROCEEDS”

Delete 5.08 A in its entirety.

ARTICLE 5.08 “RECEIPT AND APPLICATION OF INSURANCE PROCEEDS”

Delete 5.08 B in its entirety.

ARTICLE 5.09 “ACCEPTANCE OF BONDS AND INSURANCE”

Delete 5.09 in its entirety and replace with the following:

If Owner has any objection to the coverage afforded by Contractor or other provisions of the bonds or insurance required to be purchased and maintained by the Contractor in accordance with Article 5 on the basis of non-conformance with the Contract Documents, the Owner shall so notify the Contractor in writing within 7 days after receipt of the certificates (or other evidence requested) required by Paragraph 2.01.B. Contractor shall provide to the Owner such additional information in respect of insurance as Owner may reasonable request. If Contractor does not purchase or maintain all of the bonds and insurance required of Contractor by the Contract Documents, owner shall notify Contractor in writing of such failure to purchase prior to the start of the Work, or of such failure to maintain prior to any change in the required coverage. Without prejudice to any other right or remedy, the Contractor may elect to obtain equivalent bonds or insurance to protect Owner’s interest at the expense of the Contractor who was required to provide such coverage, and a Change Order shall be issued to adjust the Contract Price accordingly.

©COPYRIGHT 2016 CH2M HILL

ARTICLE 5.10 “Partial Utilization, Acknowledgement of Property Insurer”

Delete Article 5.10 in its entirety.

ARTICLE 6.09 "LAWS AND REGULATIONS"

Add the following:

The Contractor shall comply with the City of Key West Noise Ordinance.

ARTICLE 6.09 "LAWS AND REGULATIONS"

Add the following subarticles:

Within 10 days of Notice of Award, the successful Bidder must represent that he holds all applicable state, county, and City of Key West licenses and permits required to do business as a contractor with respect to the work described in the Contract Documents.

Further, the successful Bidder must, within 10 days of Notice of Award, furnish documentation showing that, as a minimum, he has complied with the provisions of Chapter 91 of the Code of Ordinances of the City of Key West in order to enter into the Agreement contained in the Contract Documents.

Specifically, within 10 days after Notice of Award, the successful Bidder must demonstrate that he holds, as a minimum, the following licenses and certificates:

A. All licenses or certificates required by federal, state, or local statutes or regulations.

B. Holds a valid Certificate of Competency issued by the Public Service Director of the Building and Zoning Department which shall be valid throughout the Contract time.

C. Holds a valid occupational license issued by the City of Key West.

FOLLOWING ARTICLE 6.09 "LAWS AND REGULATIONS"

Add the following Article:

HISTORIC PRESERVATION
The Contractor shall comply with Florida's Archives and Historic Act (Florida Statutes, Chapter 267) and the regulations of the local historic preservation board as applicable and protect against the potential loss or destruction of significant historical or archaeological data, sites, and properties in connection with the project.

©COPYRIGHT 2016 CH2M HILL

ARTICLE 6.13 "SAFETY AND PROTECTION"

Add the following Subarticle:

OCCUPATIONAL SAFETY AND HEALTH

The Contractor and its Sub-Contractors shall observe and comply with all applicable local, state, and federal occupational safety and health regulations during the prosecution of work under this Contract. In addition, full compliance by the Contractor with the U.S. Department of Labor's Occupational Safety and Health Standards, as established in Public Law 91-596, will be required under the terms of this Contract.

ARTICLE 6.20 "INDEMNIFICATION"

Replace the language in Paragraph A with the following:

To the fullest extent permitted by law, the CONTRACTOR expressly agrees to indemnify and hold harmless the City of Key West, their officers, directors, agents and employees *(herein called the “indemnities”) from liabilities, damages, losses and costs, including but not limited to, reasonable attorney’s fees and court costs, such as legal expenses to include costs incurred in establishing the indemnification and other rights agreed to in this Paragraph, to persons or property, to the extent caused by the negligence, recklessness, or intentional wrongful misconduct of the CONTRACTOR, its Subcontractors or persons employed or utilized by them in the performance of the Contract. Claims by indemnitees for indemnification shall be limited to the amount of CONTRACTOR’s insurance or $1 million per occurrence, whichever is greater. The parties acknowledge that the amount of the indemnity required hereunder bears a reasonable commercial relationship to the Contract and it is part of the project specifications or the bid documents, if any.

Replace the language in Paragraph B with the following:

The indemnification obligations under the Contract shall not be restricted in any way by any limitation on the amount or type of damages, compensation, or benefits payable by or for the CONTRACTOR under Workers’ Compensation acts, disability benefits acts, or other employee benefits acts, and shall extend to and include any actions brought by or in the name of any employee of the Contractor or of any third party to whom CONTRACTOR may subcontract a part or all of the Work. This indemnification shall continue beyond the date of completion of the work.

©COPYRIGHT 2016 CH2M HILL

The obligation of the Contractor under this Article shall be limited to the contractual liability as specified in the Supplementary Conditions, Article Insurance and Liability (Paragraph 5.04.I.1 and 5.04.I.2).

ARTICLE 13.03 “TESTS AND INSPECTIONS”

SC-13.03.B Delete 13.03.B in its entirety and insert the following:

Contractor shall employ and pay for the services of an independent testing laboratory to perform all inspections, tests, or approvals required by the Contract Documents.

SC-13.03.D. Supplement paragraph 13.03.D of the General Conditions as follows:

Tests required by Contract Documents to be performed by Contractor that require test certificates be submitted to Owner or Engineer for acceptance shall be made by an independent testing laboratory or agency licensed or certified in accordance with Laws and Regulations and applicable state and local statutes. In the event state license or certification is not required, testing laboratories or agencies shall meet following applicable requirements:

13.3.D.1. “Recommended Requirements for Independent Laboratory Qualification,” published by the American Council of Independent Laboratories.

13.3.D.2. Basic requirements of ASTM E329, “Standard Specification for Agencies Engaged in the Testing and/or Inspection of Materials Used in Construction” as applicable.

13.3.D.3. Calibrate testing equipment at reasonable intervals by devices of accuracy traceable to either the National Bureau of Standards or accepted values of natural physical constants.

ARTICLE 13.07 “CORRECTION PERIOD”

13.07.A. Change the first sentence from “If within one year after the date of Substantial Completion…” TO “If within five years after the date of Substantial Completion…”

13.07.D. Change the sentence from “…will be extended for an additional period of one year after such corrections or removal…” TO “…will be extended for an additional period of five years after such correction or removal…”

ARTICLE 14 "PAYMENTS TO CONTRACTOR AND COMPLETION"

Add the following subarticles:

14.02.A4 Submit separate applications for request based upon the separate Schedules of Value required for Mallory Square and Zero Duval segments of the work. (See also 3.07.A.4).

©COPYRIGHT 2016 CH2M HILL

Add the following to the end of Subarticle 14.02.B.1:

14.02.B1.1 The Owner will deduct from the estimate, and retain as part security, 10 percent of the amount earned for work satisfactorily completed. A deduction and retainage of 10 percent will be made on the estimated amount earned for approved items of material delivered to and properly stored at the jobsite but not incorporated into the work.

14.02.B1.2 After deducting the retainage and the amount of all previous partial payments made to the Contractor from the amount earned, the amount due will be made payable to the Contractor. Recommendations for payment received by the Owner less than 40 days prior to the scheduled day for payment will not be processed or paid until the following month.

CERTIFICATION REGARDING DEBARMENT, SUSPENSION, INELIGIBILITY, AND VOLUNTARY EXCLUSION – LOWER TIER COVERED TRANSACTIONS

Note: This certification/clause has been extracted from Appendix B to 40 CFR Part 32 and is applicable to all goods and services (including construction) contracts and subcontracts with a price equaling or exceeding $25,000 and in all solicitations for such contracts and subcontracts.

Instructions for Certification:

1. By signing and submitting this Proposal, the prospective lower tier participant is providing the certification set out below.

2. The certification in this clause is a material representation of fact upon which reliance was placed when this transaction was entered into. If it is later determined that the prospective lower tier participant knowingly rendered an erroneous certification, in addition to other remedies available to the Federal Government, the department or agency with which this transaction originated may pursue available remedies, including suspension and/or debarment.

3. The prospective lower tier participant shall provide immediate written notice to the person to which this Proposal is submitted if at any time the prospective lower tier participant learns that its certification was erroneous when submitted or has become erroneous by reason of changed circumstances.

4. The terms “covered transaction,” “debarred,” “suspended,” “ineligible,” “lower tier covered transaction,” “participant,” “person,” “primary covered transaction,” “principal,” “proposal,” and “voluntarily excluded,” as used in this clause, have the meanings set out in the Definitions and Coverage sections of rules implementing Executive Order 12549. You may contact the person to which this Proposal is submitted for assistance in obtaining a copy of those regulations.

©COPYRIGHT 2016 CH2M HILL

5. The prospective lower tier participant agrees by submitting this Proposal that, should the proposed covered transaction be entered into, it shall not knowingly enter into any lower tier covered transaction with a person who is debarred, suspended, declared ineligible, or voluntarily excluded from participation in this covered transaction, unless authorized by the department or agency with which this transaction originated.

6. The prospective lower tier participant further agrees by submitting this Proposal that it will include this clause titled "Certification Regarding Debarment, Suspension, Ineligibility and Voluntary Exclusion-Lower Tier Covered Transactions," without modification, in all lower tier covered transactions and in all solicitations for lower tier covered transactions.

7. A participant in a covered transaction may rely upon a certification of a prospective participant in a lower tier covered transaction that it is not debarred, suspended, ineligible, or voluntarily excluded from the covered transaction, unless it knows that the certification is erroneous. A participant may decide the method and frequency by which it determines the eligibility of its principals. Each participant may, but is not required to, check the Nonprocurement List.

8. Nothing contained in the foregoing shall be construed to require establishment of a system of records in order to render in good faith the certification required by this clause. The knowledge and information of a participant is not required to exceed that which is normally possessed by a prudent person in the ordinary course of business dealings.

9. Except for transactions authorized under paragraph 5 of these instructions, if a participant in a covered transaction knowingly enters into a lower tier covered transaction with a person who is suspended, debarred, ineligible, or voluntarily excluded from participation in this transaction, in addition to other remedies available to the Federal Government, the department or agency with which this transaction originated may pursue available remedies, including suspension and/or debarment.

SUPPLEMENTS

A. The supplements listed below, following "END OF SECTION," are part of this Specification.

1. Exhibits A – J, City of Key West – Sample Insurance Documents.

2. Exhibit K, City of Key West – Special Events Schedule.

3. Exhibit L – Florida Department of Transportation – Public Transportation – Joint Participation Agreement (ARJ38) – September 25, 2014.

END OF SECTION

©COPYRIGHT 2016 CH2M HILL

Ena Revised 12 26 13 EOJ

EXHIBIT A

ACORD™ CERTIFICATE OF LIABILITY INSURANCE

DATE (MM/DD/YYYY)

THIS CERTIFICATE IS ISSUED AS A MATTER OF INFORMATION ONLY AND CONFERS NO RIGHTS UPON THE CERTIFICATE HOLDER. THIS CERTIFICATE DOES NOT AFFIRMATIVELY OR NEGATIVELY AMEND, EXTEND OR ALTER THE COVERAGE AFFORDED BY THE POLICIES BELOW. THIS CERTIFICATE OF INSURANCE DOES NOT CONSTITUTE A CONTRACT BETWEEN THE ISSUING INSURER(S), AUTHORIZED REPRESENTATIVE OR PRODUCER, AND THE CERTIFICATE HOLDER.

IMPORTANT: If the certificate holder is an ADDITIONAL INSURED, the policy(ies) must be endorsed. If SUBROGATION IS WAIVED, subject to the terms and conditions of the policy, certain policies may require an endorsement. A statement on this certificate does not confer rights to the certificate holder in lieu of such endorsement(s).

PRODUCER	CONTACT NAME:	
	PHONE (A/C, No, Ext):	FAX (A/C, No):
	E-MAIL ADDRESS:	
	INSURER(S) AFFORDING COVERAGE	NAIC #
	INSURER A :	
INSURED **Contractor Sample**	INSURER B :	
	INSURER C :	
	INSURER D :	
	INSURER E :	
	INSURER F :	

COVERAGES CERTIFICATE NUMBER: REVISION NUMBER:

THIS IS TO CERTIFY THAT THE POLICIES OF INSURANCE LISTED BELOW HAVE BEEN ISSUED TO THE INSURED NAMED ABOVE FOR THE POLICY PERIOD INDICATED. NOTWITHSTANDING ANY REQUIREMENT, TERM OR CONDITION OF ANY CONTRACT OR OTHER DOCUMENT WITH RESPECT TO WHICH THIS CERTIFICATE MAY BE ISSUED OR MAY PERTAIN, THE INSURANCE AFFORDED BY THE POLICIES DESCRIBED HEREIN IS SUBJECT TO ALL THE TERMS, EXCLUSIONS AND CONDITIONS OF SUCH POLICIES. LIMITS SHOWN MAY HAVE BEEN REDUCED BY PAID CLAIMS.

INSR LTR	TYPE OF INSURANCE	ADDL INSR	SUBR WVD	POLICY NUMBER	POLICY EFF (MM/DD/YYYY)	POLICY EXP (MM/DD/YYYY)	LIMITS	
	GENERAL LIABILITY						EACH OCCURRENCE	$1,000,000
	X COMMERCIAL GENERAL LIABILITY						DAMAGE TO RENTED PREMISES (Ea occurrence)	$300,000
	CLAIMS-MADE X OCCUR	X	X				MED EXP (Any one person)	$
							PERSONAL & ADV INJURY	$1,000,000
							GENERAL AGGREGATE	$2,000,000
	GEN'L AGGREGATE LIMIT APPLIES PER: POLICY X PRO-JECT LOC						PRODUCTS - COMP/OP AGG	$2,000,000
								$
	AUTOMOBILE LIABILITY						COMBINED SINGLE LIMIT (Ea accident)	$1,000,000
	X ANY AUTO						BODILY INJURY (Per person)	$
	ALL OWNED AUTOS / SCHEDULED AUTOS	X	X				BODILY INJURY (Per accident)	$
	X HIRED AUTOS / X NON-OWNED AUTOS						PROPERTY DAMAGE (Per accident)	$
								$
	X UMBRELLA LIAB / X OCCUR						EACH OCCURRENCE	$,000,000
	EXCESS LIAB / CLAIMS-MADE	X	X				AGGREGATE	$,000,000
	DED / X RETENTION $							$
	WORKERS COMPENSATION AND EMPLOYERS' LIABILITY						X WC STATU-TORY LIMITS / OTH-ER	
	ANY PROPRIETOR/PARTNER/EXECUTIVE OFFICER/MEMBER EXCLUDED? Y/N N (Mandatory in NH)	N/A	X				E.L. EACH ACCIDENT	$1,000,000
	If yes, describe under DESCRIPTION OF OPERATIONS below						E.L. DISEASE - EA EMPLOYEE	$1,000,000
							E.L. DISEASE - POLICY LIMIT	$1,000,000

DESCRIPTION OF OPERATIONS / LOCATIONS / VEHICLES (Attach ACORD 101, Additional Remarks Schedule, if more space is required)

CERTIFICATE HOLDER	CANCELLATION
City of Key West P.O. Box 1409 Key West, FL 33041-1409	SHOULD ANY OF THE ABOVE DESCRIBED POLICIES BE CANCELLED BEFORE THE EXPIRATION DATE THEREOF, NOTICE WILL BE DELIVERED IN ACCORDANCE WITH THE POLICY PROVISIONS.
	AUTHORIZED REPRESENTATIVE

© 1988-2010 ACORD CORPORATION. All rights reserved.

POLICY NUMBER:

COMMERCIAL GENERAL LIABILITY
CG 20 10 07 04

THIS ENDORSEMENT CHANGES THE POLICY. PLEASE READ IT CAREFULLY.

ADDITIONAL INSURED – OWNERS, LESSEES OR CONTRACTORS – SCHEDULED PERSON OR ORGANIZATION

This endorsement modifies insurance provided under the following:

COMMERCIAL GENERAL LIABILITY COVERAGE PART

SCHEDULE

Name Of Additional Insured Person(s) Or Organization(s):	Location(s) Of Covered Operations
Information required to complete this Schedule, if not shown above, will be shown in the Declarations.	

A. **Section II – Who Is An Insured** is amended to include as an additional insured the person(s) or organization(s) shown in the Schedule, but only with respect to liability for "bodily injury", "property damage" or "personal and advertising injury" caused, in whole or in part, by:

1. Your acts or omissions; or
2. The acts or omissions of those acting on your behalf;

in the performance of your ongoing operations for the additional insured(s) at the location(s) designated above.

B. With respect to the insurance afforded to these additional insureds, the following additional exclusions apply:

This insurance does not apply to "bodily injury" or "property damage" occurring after:

1. All work, including materials, parts or equipment furnished in connection with such work, on the project (other than service, maintenance or repairs) to be performed by or on behalf of the additional insured(s) at the location of the covered operations has been completed; or
2. That portion of "your work" out of which the injury or damage arises has been put to its intended use by any person or organization other than another contractor or subcontractor engaged in performing operations for a principal as a part of the same project.

© ISO Properties, Inc., 2004

POLICY NUMBER:

COMMERCIAL GENERAL LIABILITY
CG 20 37 07 04

THIS ENDORSEMENT CHANGES THE POLICY. PLEASE READ IT CAREFULLY.

ADDITIONAL INSURED – OWNERS, LESSEES OR CONTRACTORS – COMPLETED OPERATIONS

This endorsement modifies insurance provided under the following:

COMMERCIAL GENERAL LIABILITY COVERAGE PART

SCHEDULE

Name Of Additional Insured Person(s) Or Organization(s):	Location And Description Of Completed Operations
Information required to complete this Schedule, if not shown above, will be shown in the Declarations.	

Section II – Who Is An Insured is amended to include as an additional insured the person(s) or organization(s) shown in the Schedule, but only with respect to liability for "bodily injury" or "property damage" caused, in whole or in part, by "your work" at the location designated and described in the schedule of this endorsement performed for that additional insured and included in the "products-completed operations hazard".

© ISO Properties, Inc., 2004

EXHIBIT D

THIS ENDORSEMENT CHANGES THE POLICY. PLEASE READ IT CAREFULLY.

EARLIER NOTICE OF CANCELLATION PROVIDED BY US

Number of Days Notice 30

For any statutorily permitted reason **other than nonpayment of premium**, the number of days required for notice of cancellation is increased to the number of days shown in the Schedule above.

If this policy is cancelled by us we will send the Named Insured and any party listed in the following schedule notice of cancellation based on the number of days notice shown above.

Schedule

Name of Person or Organization

Mailing Address

POLICY NUMBER:

COMMERCIAL GENERAL LIABILITY
CG 24 04 05 09

WAIVER OF TRANSFER OF RIGHTS OF RECOVERY AGAINST OTHERS TO US

This endorsement modifies insurance provided under the following:

COMMERCIAL GENERAL LIABILITY COVERAGE PART
PRODUCTS/COMPLETED OPERATIONS LIABILITY COVERAGE PART

SCHEDULE

Name Of Person Or Organization:
Information required to complete this Schedule, if not shown above, will be shown in the Declarations.

The following is added to Paragraph **8. Transfer Of Rights Of Recovery Against Others To Us** of **Section IV – Conditions:**

We waive any right of recovery we may have against the person or organization shown in the Schedule above because of payments we make for injury or damage arising out of your ongoing operations or "your work" done under a contract with that person or organization and included in the "products-completed operations hazard". This waiver applies only to the person or organization shown in the Schedule above.

© Insurance Services Office, Inc., 2008

EXHIBIT F

WORKERS COMPENSATION AND EMPLOYERS LIABILITY INSURANCE POLICY **WC 00 03 13**

(Ed. 4-84)

WAIVER OF OUR RIGHT TO RECOVER FROM OTHERS ENDORSEMENT

We have the right to recover our payments from anyone liable for an injury covered by this policy. We will not enforce our right against the person or organization named in the Schedule. (This agreement applies only to the extent that you perform work under a written contract that requires you to obtain this agreement from us.)

This agreement shall not operate directly or indirectly to benefit anyone not named in the Schedule.

Schedule

This endorsement changes the policy to which it is attached and is effective on the date issued unless otherwise stated.

(The information below is required only when this endorsement is issued subsequent to preparation of the policy.)

Endorsement
Insured

Effective Policy No.

Endorsement No.
Premium

Insurance Company

Countersigned by_____

WC 00 03 13
(Ed. 4-84)

© 1983 National Council on Compensation Insurance.

9-7-12 Navigable waterway addendum

City of Key West confirms that the scope of services specified in the Contract, requires work on or near a navigable waterway. Waterway description: _____

Therefore the following coverages will indeed be required as specified in the contract documents:

Workers Compensation / Employer Liability

____ USL&H Coverage (Longshore and Harbor Workers' Compensation Act)
Endorsement WC 00 01 06 A

____ Jones Act Coverage*
Endorsement WC 00 02 01 A

Marine Third Party Liability

____ Protection & Indemnity $1,000,000 limit

*Jones Act (Crew) coverage may be provided under the P& I policy, if _____ is using an OWNED vessel during the course of the work.

EXHIBIT H

ACORD™ CERTIFICATE OF LIABILITY INSURANCE

DATE (MM/DD/YYYY)

THIS CERTIFICATE IS ISSUED AS A MATTER OF INFORMATION ONLY AND CONFERS NO RIGHTS UPON THE CERTIFICATE HOLDER. THIS CERTIFICATE DOES NOT AFFIRMATIVELY OR NEGATIVELY AMEND, EXTEND OR ALTER THE COVERAGE AFFORDED BY THE POLICIES BELOW. THIS CERTIFICATE OF INSURANCE DOES NOT CONSTITUTE A CONTRACT BETWEEN THE ISSUING INSURER(S), AUTHORIZED REPRESENTATIVE OR PRODUCER, AND THE CERTIFICATE HOLDER.

IMPORTANT: If the certificate holder is an ADDITIONAL INSURED, the policy(ies) must be endorsed. If SUBROGATION IS WAIVED, subject to the terms and conditions of the policy, certain policies may require an endorsement. A statement on this certificate does not confer rights to the certificate holder in lieu of such endorsement(s).

PRODUCER

CONTACT NAME:

PHONE (A/C, No, Ext):

FAX (A/C, No):

E-MAIL ADDRESS:

INSURER(S) AFFORDING COVERAGE	NAIC #
INSURER A :	
INSURER B :	
INSURER C :	
INSURER D :	
INSURER E :	
INSURER F :	

INSURED

Navigable Waterway Addendum

COVERAGES CERTIFICATE NUMBER: REVISION NUMBER:

THIS IS TO CERTIFY THAT THE POLICIES OF INSURANCE LISTED BELOW HAVE BEEN ISSUED TO THE INSURED NAMED ABOVE FOR THE POLICY PERIOD INDICATED. NOTWITHSTANDING ANY REQUIREMENT, TERM OR CONDITION OF ANY CONTRACT OR OTHER DOCUMENT WITH RESPECT TO WHICH THIS CERTIFICATE MAY BE ISSUED OR MAY PERTAIN, THE INSURANCE AFFORDED BY THE POLICIES DESCRIBED HEREIN IS SUBJECT TO ALL THE TERMS, EXCLUSIONS AND CONDITIONS OF SUCH POLICIES. LIMITS SHOWN MAY HAVE BEEN REDUCED BY PAID CLAIMS.

INSR LTR	TYPE OF INSURANCE	ADDL INSR	SUBR WVD	POLICY NUMBER	POLICY EFF (MM/DD/YYYY)	POLICY EXP (MM/DD/YYYY)	LIMITS	
	GENERAL LIABILITY						EACH OCCURRENCE	$
	COMMERCIAL GENERAL LIABILITY						DAMAGE TO RENTED PREMISES (Ea occurrence)	$
	CLAIMS-MADE OCCUR						MED EXP (Any one person)	$
							PERSONAL & ADV INJURY	$
							GENERAL AGGREGATE	$
	GEN'L AGGREGATE LIMIT APPLIES PER						PRODUCTS - COMP/OP AGG	$
	POLICY PRO-JECT LOC							$
	AUTOMOBILE LIABILITY						COMBINED SINGLE LIMIT (Ea accident)	$
	ANY AUTO						BODILY INJURY (Per person)	$
	ALL OWNED AUTOS / SCHEDULED AUTOS						BODILY INJURY (Per accident)	$
	HIRED AUTOS / NON-OWNED AUTOS						PROPERTY DAMAGE (Per accident)	$
								$
	X UMBRELLA LIAB / X OCCUR						EACH OCCURRENCE	$,000,000
	EXCESS LIAB / CLAIMS-MADE	X	X				AGGREGATE	$,000,000
	DED / X RETENTION $							$
	WORKERS COMPENSATION AND EMPLOYERS' LIABILITY						X WC STATU-TORY LIMITS / OTH-ER	
	ANY PROPRIETOR/PARTNER/EXECUTIVE OFFICER/MEMBER EXCLUDED? Y / N [N] (Mandatory in NH)	N / A	X				E.L. EACH ACCIDENT	$1,000,000
	If yes, describe under DESCRIPTION OF OPERATIONS below						E.L. DISEASE - EA EMPLOYEE	$1,000,000
							E.L. DISEASE - POLICY LIMIT	$1,000,000
	Protection & Indemnity	X	X					$1,000,000
	Crew Coverage (Jones Act)		X					$1,000,000

DESCRIPTION OF OPERATIONS / LOCATIONS / VEHICLES (Attach ACORD 101, Additional Remarks Schedule, if more space is required)

Work comp to include USL&H coverage, if required by contract.

CERTIFICATE HOLDER

City of Key West
P.O. Box 1409
Key West, FL 33041-1409

CANCELLATION

SHOULD ANY OF THE ABOVE DESCRIBED POLICIES BE CANCELLED BEFORE THE EXPIRATION DATE THEREOF, NOTICE WILL BE DELIVERED IN ACCORDANCE WITH THE POLICY PROVISIONS.

AUTHORIZED REPRESENTATIVE

© 1988-2010 ACORD CORPORATION. All rights reserved.

LONGSHORE AND HARBOR WORKERS' COMPENSATION ACT COVERAGE ENDORSEMENT

This endorsement applies only to work subject to the Longshore and Harbor Workers' Compensation Act in a state shown in the Schedule. The policy applies to that work as though that state were listed in Item 3.A. of the Information Page.

General Section C. **Workers' Compensation Law** is replaced by the following:

C. **Workers' Compensation Law**

Workers' Compensation Law means the workers or workmen's compensation law and occupational disease law of each state or territory named in Item 3.A. of the Information Page and the Longshore and Harbor Workers' Compensation Act (33 USC Sections 901–950). It includes any amendments to those laws that are in effect during the policy period. It does not include any other federal workers or workmen's compensation law, other federal occupational disease law or the provisions of any law that provide nonoccupational disability benefits.

Part Two (Employers Liability Insurance), C. Exclusions., exclusion 8, does not apply to work subject to the Longshore and Harbor Workers' Compensation Act.

This endorsement does not apply to work subject to the Defense Base Act, the Outer Continental Shelf Lands Act, or the Nonappropriated Fund Instrumentalities Act.

Schedule

State	**Longshore and Harbor Workers' Compensation Act Coverage Percentage**

The rates for classifications with code numbers not followed by the letter "F" are rates for work not ordinarily subject to the Longshore and Harbor Workers' Compensation Act. If this policy covers work under such classifications, and if the work is subject to the Longshore and Harbor Workers' Compensation Act, those non-F classification rates will be increased by the Longshore and Harbor Workers' Compensation Act Coverage Percentage shown in the Schedule.

This endorsement changes the policy to which it is attached and is effective on the date issued unless otherwise stated.

(The information below is required only when this endorsement is issued subsequent to preparation of the policy.)

Endorsement Insured | Effective Policy No. | Endorsement No. Premium

Insurance Company | Countersigned by_____

© 1983, 1991 National Council on Compensation Insurance.

MARITIME COVERAGE ENDORSEMENT

This endorsement changes how insurance provided by Part Two (Employers Liability Insurance) applies to bodily injury to a master or member of the crew of any vessel.

A. **How This Insurance Applies** is replaced by the following:

A. **How This Insurance Applies**

This insurance applies to bodily injury by accident or bodily injury by disease. Bodily injury includes resulting death.

1. The bodily injury must arise out of and in the course of the injured employee's employment by you.
2. The employment must be necessary or incidental to work described in Item 1 of the Schedule of the Maritime Coverage Endorsement.
3. The bodily injury must occur in the territorial limits of, or in the operation of a vessel sailing directly between the ports of, the continental United States of America, Alaska, Hawaii or Canada.
4. Bodily injury by accident must occur during the policy period.
5. Bodily injury by disease must be caused or aggravated by the conditions of your employment. The employee's last day of last exposure to the conditions causing or aggravating such bodily injury by disease must occur during the policy period.
6. If you are sued, the original suit and any related legal actions for damages for bodily injury by accident or by disease must be brought in the United States of America, its territories or possessions, or Canada.

C. **Exclusions** is changed by removing exclusion 10 and by adding exclusions 13 and 14.

This insurance does not cover:

13. bodily injury covered by a Protection and Indemnity Policy or similar policy issued to you or for your benefit. This exclusion applies even if the other policy does not apply because of another insurance clause, deductible or limitation of liability clause, or any similar clause.
14. your duty to provide transportation, wages, maintenance and cure. This exclusion does not apply if a premium entry is shown in Item 2 of the Schedule.

D **We Will Defend** is changed by adding the following statement:

We will treat a suit or other action in rem against a vessel owned or chartered by you as a suit against you.

G **Limits of Liability**

Our liability to pay for damages is limited. Our limits of liability are shown in the Schedule. They apply as explained below.

1. Bodily Injury by Accident. The limit shown for "bodily injury by accident—each accident" is the most we will pay for all damages covered by this insurance because of bodily injury to one or more employees in any one accident.

   A disease is not bodily injury by accident unless it results directly from bodily injury by accident.

2. Bodily Injury by Disease. The limit shown for "bodily injury by disease—aggregate" is the most we will pay for all damages covered by this insurance because of bodily injury by disease to one or more employees. The limit applies separately to bodily injury by disease arising out of work in each state shown in Item 3.A. of the Information Page. Bodily injury by disease will be deemed to occur in the state of the vessel's home port.

   Bodily injury by disease does not include disease that results directly from a bodily injury by accident.

3. We will not pay any claims for damages after we have paid the applicable limit of our liability under this insurance.

© 1983, 1988, 1991, 1995 National Council on Compensation Insurance, Inc.

Schedule

1. Description of work:

2. Transportation, Wages, Maintenance and Cure Premium $

3. Limits of Liability

Bodily Injury by Accident $_____ each accident

Bodily Injury by Disease $_____ aggregate

This endorsement changes the policy to which it is attached and is effective on the date issued unless otherwise stated.

(The information below is required only when this endorsement is issued subsequent to preparation of the policy.)

Endorsement
Insured

Effective Policy No.

Endorsement No.
Premium

Insurance Company

Countersigned by_____

© 1983, 1988, 1991, 1995 National Council on Compensation Insurance, Inc.

Page Intentionally Left Blank

EXHIBIT K

EVENT CLOSURE LIST FOR ZERO DUVAL AND MALLORY SQUARE - 2016

DATE	NOTES	EVENT
May 28 – 30	No Work	Memorial Day
July 2 - 4	No Work	Independence Day
Sept. 3 - 5	No Work	Labor Day
Oct. 21 - 30	No Work	Fantasy Fest
Nov. 6 - 13	No Work	Super Boat Races
Nov. 24 - 27	No Work	Thanksgiving
Dec. 24 – Jan 2	No Work	Christmas – New Year's Day

Exhibit 'L'

STATE OF FLORIDA DEPARTMENT OF TRANSPORTATION
PUBLIC TRANSPORTATION
JOINT PARTICIPATION AGREEMENT

Financial Project Number(s): (item-segment-phase-sequence) 43503519401	Fund: PORT	FLAIR Category.: 088794
	Function: 215	Object Code: 750005
	Federal Number:	Org. Code: 55062020629
Contract Number: ARJ38	DUNS Number:	Vendor No.: F596000346036
CFDA Number:	Agency DUNS Number:	CSFA Number: 55005
CFDA Title:		CSFA Title:

THIS AGREEMENT, made and entered into this 25 day of September, 2014, by and between the STATE OF FLORIDA DEPARTMENT OF TRANSPORTATION, an agency of the State of Florida, hereinafter referred to as the Department, and Port of Key West, City of Key West P.O. Box 1409, Key West, FL 33041-1409 hereinafter referred to as Agency. The Department and Agency agree that all terms of this Agreement will be completed on or before 12/31/2018 and this Agreement will expire unless a time extension is provided in accordance with Section 16.00.

WITNESSETH:

WHEREAS, the Agency has the authority to enter into said Agreement and to undertake the project hereinafter described, and the Department has been granted the authority to function adequately in all areas of appropriate jurisdiction including the implementation of an integrated and balanced transportation system and is authorized under 311.07, Florida Statutes, to enter into this Agreement.

NOW, THEREFORE, in consideration of the mutual covenants, promises and representations herein, the parties agree as follows:

1.00 Purpose of Agreement: The purpose of this Agreement is

To improve the mooring structures and fenders to take the berthing loads off the Mallory T-Pier by meeting the structural load capacity needs of the cruise ships. The north 25% of the pier demolish and a new structural mooring dolphin will be constructed in its place. The dolphin will also be utilized for passenger and crew access to the ships.

and as further described in Exhibit(s) A,B,C and D attached hereto and by this reference made a part hereof, hereinafter referred to as the project, and to provide Departmental financial assistance to the Agency and state the terms and conditions upon which such assistance will be provided and the understandings as to the manner in which the project will be undertaken and completed.

2.00 Accomplishment of the Project:

2.10 General Requirements: The Agency shall commence, and complete the project as described in Exhibit "A" attached hereto and by this reference made a part hereof this Agreement, with all practical dispatch, in a sound, economical, and efficient manner, and in accordance with the provisions herein, and all applicable laws.

2.20 Pursuant to Federal, State, and Local Law: In the event that any election, referendum, approval, permit, notice, or other proceeding or authorization is requisite under applicable law to enable the Agency to enter into this Agreement or to undertake the project hereunder, or to observe, assume or carry out any of the provisions of the Agreement, the Agency will initiate and consummate, as provided by law, all actions necessary with respect to any such matters so requisite.

2.30 Funds of the Agency: The Agency shall initiate and prosecute to completion all proceedings necessary including federal aid requirements to enable the Agency to provide the necessary funds for completion of the project.

2.40 Submission of Proceedings, Contracts and Other Documents: The Agency shall submit to the Department such data, reports, records, contracts and other documents relating to the project as the Department may require as listed in Exhibit "C" attached hereto and by this reference made a part hereof. The Department has the option to require an activity report on a quarterly basis. The activity report will include details of the progress of the project towards completion.

3.00 Project Cost: The total estimated cost of the project is $ 1,237,500.00 . This amount is based upon the estimate summarized in Exhibit "B" attached hereto and by this reference made a part hereof this Agreement. The Agency agrees to bear all expenses in excess of the total estimated cost of the project and any deficits involved.

4.00 Department Participation: The Department agrees to maximum participation, including contingencies, in the project in the amount of $ 762,000.00 as detailed in Exhibit "B", or in an amount equal to the percentage(s) of total cost shown in Exhibit "B", whichever is less.

4.10 Project Cost Eligibility : Project costs eligible for State participation will be allowed only from the effective date of this agreement. It is understood that State participation in eligible project costs is subject to:

(a) Legislative approval of the Department's appropriation request in the adopted work program year that the project is scheduled to be committed;

(b) Availability of funds as stated in Section 15.00 of this Agreement; Approval of all plans, specifications, contracts or other obligating documents as required by the Department, and all other terms of this Agreement;

(c) Department approval of costs in excess of the approved funding or attributable to actions which have not received the required approval of the Department and all other terms of this Agreement;

(d) Department approval of the project scope and budget (Exhibits A & B) at the time appropriation authority becomes available.

4.20 Front End Funding : Front end funding ☐ is ☒ is not applicable. If applicable, the Department may initially pay 100% of the total allowable incurred project costs up to an amount equal to its total share of participation as shown in paragraph 4.00.

5.00 Project Budget and Payment Provisions:

5.10 The Project Budget: A project budget shall be prepared by the Agency and approved by the Department. The Agency shall maintain said budget, carry out the project and shall incur obligations against project funds only in conformity with the latest approved budget for the project. No budget increase or decrease shall be effective unless it complies with fund participation requirements established in Section 4.00 of this Agreement, or Amendment thereto, and is approved by the Department Comptroller.

5.20 Payment Provisions: Unless otherwise allowed, payment will begin in the year the project or project phase is scheduled in the work program as of the date of the agreement. Payment will be made for actual costs incurred as of the date the invoice is submitted with the final payment due upon receipt of a final invoice.

6.00 Accounting Records:

6.10 Establishment and Maintenance of Accounting Records: The Agency shall establish for the project, in conformity with requirements established by Department's program guidelines/procedures and "Principles for State and Local Governments", separate accounts to be maintained within its existing accounting system or establish independent accounts. Such accounts are referred to herein collectively as the "project account". Records of costs incurred under terms of this Agreement shall be maintained in the project account and made available upon request to the Department at all times during the period of this Agreement and for five (5) years after final payment is made. Copies of these documents and records shall be furnished to the Department upon request. Records of costs incurred include the Agency's general accounting records and the Project records, together with supporting documents and records, of the Agency and all sub-consultants performing work on the Project and all other records of the Agency and sub-consultants considered necessary by the Department for a proper audit of costs. If any litigation, claim, or audit is started before the expiration of the five (5) year period, the records shall be retained until all litigation, claims, or audit findings involving the records have been resolved.

6.30 Costs Incurred for the Project: The Agency shall charge to the project account all eligible costs of the project. Costs in excess of the latest approved budget or attributable to actions which have not received the required approval of the Department shall not be considered eligible costs.

6.40 Documentation of Project Costs: All costs charged to the project, including any approved services contributed by the Agency or others, shall be supported by properly executed payrolls, time records, invoices, contracts, or vouchers evidencing in proper detail the nature and propriety of the charges.

6.50 Checks, Orders, and Vouchers: Any check or order drawn by the Agency with respect to any item which is or will be chargeable against the project account will be drawn only in accordance with a properly signed voucher then on file in the office of the Agency stating in proper detail the purpose for which such check or order is drawn. All checks, payrolls, invoices, contracts, vouchers, orders, or other accounting documents pertaining in whole or in part to the project shall be clearly identified, readily accessible, and, to the extent feasible, kept separate and apart from all other such documents.

6.60 Audit Authority: In addition to the requirements below, the Agency agrees to comply and cooperate with any inspections, reviews, investigations, or audits deemed necessary by the Department, Florida's Chief Financial Officer or Auditor General. The Agency shall retain sufficient records demonstrating its compliance with the terms of this Agreement for a period of five years from the date the audit report is issued, and shall allow the Department access to such records and working papers upon request. The following requirements do not limit the authority of the Department to conduct or arrange for the conduct of additional audits or evaluations of state financial assistance or limit the authority of any state agency inspector general, the Auditor General, or any other state official.

The Agency shall comply with all audit and audit reporting requirements as specified in Exhibit "D" attached hereto and by this reference made a part hereof this Agreement.

6.61 Monitoring: In addition to reviews of audits conducted in accordance with OMB Circular A-133 as revised and Section 215.97, Florida Statutes, (see "Audits" below), monitoring procedures may include, but not be limited to, on-site visits by Department staff, limited scope audits as defined by OMB Circular A-133 as revised, and/or other procedures. The Agency agrees to comply and cooperate fully with any monitoring procedures/processes deemed appropriate by the Department. In the event the Department determines that a limited scope audit of the Agency is appropriate, the Agency agrees to comply with any additional instructions provided by the Department staff to the Agency regarding such audit. The Agency further agrees to comply and cooperate with any inspections, reviews, investigations, or audits deemed necessary by FDOT's Office of Inspector General (OIG) and Florida's Chief Financial Officer (CFO) or Auditor General.

8.62 Audits:

Part I Federally Funded: If the Agency is a state, local government, or non-profit organizations as defined in OMB Circular A-133 and a recipient of federal funds, the following annual audit criteria will apply:

1. In the event that the recipient expends $500,000 or more in Federal awards in its fiscal year, the recipient must have a single or program-specific audit conducted in accordance with the provisions of OMB Circular A-133, as revised. Exhibit "D" to this agreement indicates Federal resources awarded through the Department by this agreement. In determining the Federal awards expended in its fiscal year, the recipient shall consider all sources of Federal awards, including Federal resources received from the Department. The determination of amounts of Federal awards expended should be in accordance with the guidelines established by OMB Circular A-133, as revised. An audit of the recipient conducted by the Auditor General in accordance with the provisions OMB Circular A-133, as revised, will meet the requirements of this part.

2. In connection with the audit requirements addressed in Part I, Paragraph 1, the recipient shall fulfill the requirements relative to auditee responsibilities as provided in Subpart C of OMB Circular A-133.

3. If the recipient expends less than the amount in Part I, Paragraph 1., an audit conducted in accordance with the provisions of OMB Circular A-133, is not required. If the recipient elects to conduct such an audit, the cost of the audit must be paid from resources obtained from other than Federal entities.

4. Federal awards are to be identified using the Catalog of Federal Domestic Assistance (CFDA) title and number, award number and year, and name of the awarding federal agency.

Part II State Funded: If the Agency is a non-state entity as defined by Section 215.97(2)(m), Florida Statutes, and a recipient of state funds, the following annual audit criteria will apply:

1. In the event that the recipient expends a total amount of state financial assistance equal to or in excess of $500,000 in any fiscal year, the recipient must have a State single or project-specific audit for such fiscal year in accordance with Section 215.97, Florida Statutes; applicable rules of the Department of Financial Services and the CFO; and Chapters 10.550 (local governmental entities) or 10.650 (nonprofit and for-profit organizations), Rules of the Auditor General. Exhibit "D" to this agreement indicates state financial assistance awarded through the Department by this agreement. In determining the state financial assistance expended in its fiscal year, the recipient shall consider all sources of state financial assistance, including state financial assistance received from the Department, other state agencies, and other non-state entities. State financial assistance does not include Federal direct or pass-through awards and resources received by a non-state entity for Federal program matching requirements.

2. In connection with the audit requirements addressed in Part II, Paragraph 1., the recipient shall ensure that the audit complies with the requirements of Section 215.97(8), Florida Statutes. This includes submission of a financial reporting package as defined by Section 215.97(2)(e), Florida Statutes, and Chapter 10.550 (local governmental entities) or 10.650 (nonprofit and for-profit organizations), Rules of the Auditor General.

3. If the recipient expends less than the amount in Part II, Paragraph 1., such audit is not required. If the recipient elects to conduct such an audit, the cost of the audit must be paid from the recipient's resources obtained from non-state entities.

4. State awards are to be identified using the Catalog of State Financial Assistance (CSFA) title and number, award number and year, and name of the state agency awarding it.

Part III Other Audit Requirements

1. The Agency shall follow-up and take corrective action on audit findings. Preparation of a summary schedule of prior year audit findings, including corrective action and current status of the audit findings is required. Current year audit findings require corrective action and status of findings.

2. Records related to unresolved audit findings, appeals, or litigation shall be retained until the action is completed or the dispute is resolved. Access to project records and audit work papers shall be given to the Department, the Department Comptroller, and the Auditor General. This section does not limit the authority of the Department to conduct or arrange for the conduct of additional audits or evaluations of state financial assistance or limit the authority of any other state official.

Part IV Report Submission

1. Copies of reporting packages for audits conducted in accordance with OMB Circular A-133 as revised, and required by Section 7.62 Part I of this agreement shall be submitted, when required by Section .320 (d), OMB Circular A-133 as revised, by or on behalf of the recipient directly to each of the following:

   A. The Department at the following address:
   Florida Department of Transportation
   Office of Comptroller, MS 24
   605 Suwannee Street
   Tallahassee, Florida 32399-0405
   Email: FDOTSingleAudit@dot.state.fl.us

   B. The number of copies required by Sections .320 (d)(1) and (2), OMB Circular A-133 as revised, submitted to the following address:

   Federal Audit Clearinghouse
   Bureau of the Census
   1201 East 10th Street
   Jeffersonville, IN 47132

   C Other Federal agencies and pass-through entities in accordance with Sections .320 (e) and (f), OMB Circular A-133 as revised.

2. In the event that a copy of the reporting package for an audit required by Section 7.62 Part I of this Agreement and conducted in accordance with OMB Circular A-133 as revised is not required to be submitted to the Department for reasons pursuant to section .320 (e)(2), OMB Circular A-133 as revised, the recipient shall submit the required written notification pursuant to Section .320 (e)(2) and a copy of the recipient's audited schedule of expenditures of Federal awards directly to each of the following:
   Florida Department of Transportation
   Office of Comptroller, MS 24
   605 Suwannee Street
   Tallahassee, Florida 32399-0405
   Email: FDOTSingleAudit@dot.state.fl.us

   In addition, pursuant to Section .320 (f), OMB Circular A-133 as revised, the recipient shall submit a copy of the reporting package described in Section .320 (c), OMB Circular A-133 as revised, and any management letters issued by the auditor, to the Department at the following address:
   Florida Department of Transportation
   Office of Comptroller, MS 24
   605 Suwannee Street
   Tallahassee, Florida 32399-0405
   Email: FDOTSingleAudit@dot.state.fl.us

3. Copies of financial reporting packages required by Section 7.62 Part II of this Agreement shall be submitted by or on behalf of the recipient directly to each of the following:

   A. The Department at the following address:
   Florida Department of Transportation
   Office of Comptroller, MS 24
   605 Suwannee Street
   Tallahassee, Florida 32399-0405
   Email: FDOTSingleAudit@dot.state.fl.us

   B. The Auditor General's Office at the following address:

   Auditor General's Office
   Room 401, Pepper Building
   111 West Madison Street
   Tallahassee, Florida 32399-1450

4. Copies of reports or the management letter required by Section 7.62 Part III of this Agreement shall be submitted by or on behalf of the recipient directly to:

   A. The Department at the following address:

      Florida Department of Transportation
      Office of Comptroller, MS 24
      605 Suwannee Street
      Tallahassee, Florida 32399-0405
      Email: FDOTSingleAudit@dot.state.fl.us

5. Any reports, management letter, or other information required to be submitted to the Department pursuant to this Agreement shall be submitted timely in accordance with OMB Circular A-133 as revised, Section 215.97, Florida Statutes, and Chapter 10.550 (local governmental entities) or 10.650 (nonprofit and for-profit organizations), Rules of the Auditor General, as applicable.

6. Recipients, when submitting financial reporting packages to the Department for audits done in accordance with OMB Circular A-133 as revised or Chapters 10.550 (local governmental entities) or 10.650 (nonprofit and for-profit organizations), Rules of the Auditor General, should indicate the date that the reporting package was delivered to the Agency in correspondence accompanying the reporting package.

6.63 Record Retention: The Agency shall retain sufficient records demonstrating its compliance with the terms of this Agreement for a period of at least five years from the date the audit report is issued, and shall allow the Department, or its designee, the CFO or Auditor General access to such records upon request. The Agency shall ensure that the independent audit working papers are made available to the Department, or its designee, the CFO, or Auditor General upon request for a period of at least five years from the date the audit report is issued, unless extended in writing by the Department.

6.64 Other Requirements: If an audit discloses any significant audit findings related to any award, including material noncompliance with individual project compliance requirements or reportable conditions in internal controls of the Agency, the Agency shall submit as part of the audit package to the Department a plan for corrective action to eliminate such audit findings or a statement describing the reasons that corrective action is not necessary. The Agency shall take timely and appropriate corrective action to any audit findings, recommendations, and corrective action plans.

6.65 Insurance: Execution of this Joint Participation Agreement constitutes a certification that the Agency has and will maintain the ability to repair or replace any project equipment or facilities in the event of loss or damage due to any accident or casualty for the useful life of such equipment or facilities. In the event of the loss of such equipment or facilities, the Agency shall either replace the equipment or facilities or reimburse the Department to the extent of its interest in the lost equipment or facility. The Department may waive or modify this section as appropriate.

7.00 Requisitions and Payments:

7.10 Action by the Agency: In order to obtain any Department funds, the Agency shall file with the Department of Transportation, District Six Public Transportation Office 1000 NW 111th Ave., Miami , FL, 33172 its requisition on a form or forms prescribed by the Department, and any other data pertaining to the project account (as defined in Paragraph 6.10 hereof) to justify and support the payment requisitions.

7.11 The Agency shall provide the following quantifiable, measurable and verifiable units of deliverables as established in Exhibit "A". Each deliverable must specify the required minimum level of service to be performed and the criteria for evaluating successful completion.

7.12 Invoices for fees or other compensation for services or expenses shall be submitted in detail sufficient for a proper pre-audit and post-audit thereof, based on the quantifiable, measurable and verifiable units of deliverables as established in Exhibit "A". Deliverables must be received and accepted in writing by the Department's Project Manager prior to payments.

7.13 Supporting documentation must establish that the deliverables were received and accepted in writing by the Department and that the required minimum level of service to be performed based on the criteria for evaluating successful completion as specified in Section 2.00 and Exhibit "A" has been met.

7.14 Invoices for any travel expenses by the Agency shall be submitted in accordance with Chapter 112.061, F.S., and shall be submitted on the Department's ***Travel Form No. 300-000-01***. The Department may establish rates lower than the maximum provided in Chapter 112.061, F.S.

7.15 For real property acquired, submit;

(a) the date the Agency acquired the real property,
(b) a statement by the Agency certifying that the Agency has acquired said real property, and actual consideration paid for real property.
(c) a statement by the Agency certifying that the appraisal and acquisition of the real property together with any attendant relocation of occupants was accomplished in compliance with all federal laws, rules and procedures required by any federal oversight agency and with all state laws, rules and procedures that may apply to the Agency acquiring the real property.

7.20 The Department's Obligations: Subject to other provisions hereof, the Department will honor such requisitions in amounts and at times deemed by the Department to be proper to ensure the carrying out of the project and payment of the eligible costs. However, notwithstanding any other provision of this Agreement, the Department may elect by notice in writing not to make a payment on the project if:

7.21 Misrepresentation: The Agency shall have made misrepresentation of a material nature in its application, or any supplement thereto or amendment thereof, or in or with respect to any document or data furnished therewith or pursuant hereto;

7.22 Litigation: There is then pending litigation with respect to the performance by the Agency of any of its duties or obligations which may jeopardize or adversely affect the project, the Agreement, or payments to the project;

7.23 Approval by Department: The Agency shall have taken any action pertaining to the project which, under this agreement, requires the approval of the Department or has made related expenditures or incurred related obligations without having been advised by the Department that same are approved;

7.24 Conflict of Interests: There has been any violation of the conflict of interest provisions contained herein;

7.25 Default: The Agency has been determined by the Department to be in default under any of the provisions of the Agreement; or

7.26 Federal Participation (If Applicable): Any federal agency providing federal financial assistance to the project suspends or terminates federal financial assistance to the project. In the event of suspension or termination of federal financial assistance, the Agency will reimburse the Department for all disallowed costs, including any and all federal financial assistance as detailed in Exhibit "B."

7.30 Disallowed Costs: In determining the amount of the payment, the Department will exclude all projects costs incurred by the Agency prior to the effective date of this Agreement, after the expiration date of this Agreement, costs which are not provided for in the latest approved scope and budget for the project, costs attributable to goods or services received under a contract or other arrangements which have not been approved by the Department, and costs invoiced prior to receipt of annual notification of fund availability.

7.40 Payment Offset: If, after project completion, any claim is made by the Department resulting from an audit or for work or services performed pursuant to this agreement, the Department may offset such amount from payments due for work or services done under any public transportation joint participation agreement which it has with the Agency owing such amount if, upon demand, payment of the amount is not made within sixty (60) days to the Department. Offsetting amounts shall not be considered a breach of contract by the Department.

8.00 Termination or Suspension of Project:

8.10 Termination or Suspension Generally: If the Agency abandons or, before completion, finally discontinues the project; or if, by reason of any of the events or conditions set forth in Sections 7.21 to 7.26 inclusive, or for any other reason, the commencement, prosecution, or timely completion of the project by the Agency is rendered improbable, infeasible, impossible, or illegal, the Department will, by written notice to the Agency, suspend any or all of its obligations under this Agreement until such time as the event or condition resulting in such suspension has ceased or been corrected, or the Department may terminate any or all of its obligations under this Agreement.

8.11 Action Subsequent to Notice of Termination or Suspension. Upon receipt of any final termination or suspension notice under this paragraph, the Agency shall proceed promptly to carry out the actions required therein which may include any or all of the following: (1) necessary action to terminate or suspend, as the case may be, project activities and contracts and such other action as may be required or desirable to keep to the minimum the costs upon the basis of which the financing is to be computed; (2) furnish a statement of the project activities and contracts, and other undertakings the cost of which are otherwise includable as project costs; and (3) remit to the Department such portion of the financing and any advance payment previously received as is determined by the Department to be due under the provisions of the Agreement. The termination or suspension shall be carried out in conformity with the latest schedule, plan, and budget as approved by the Department or upon the basis of terms and conditions imposed by the Department upon the failure of the Agency to furnish the schedule, plan, and budget within a reasonable time. The approval of a remittance by the Agency or the closing out of federal financial participation in the project shall not constitute a waiver of any claim which the Department may otherwise have arising out of this Agreement.

8.12 The Department reserves the right to unilaterally cancel this Agreement for refusal by the contractor or Agency to allow public access to all documents, papers, letters, or other material subject to the provisions of Chapter 119, F.S. and made or received in conjunction with this Agreement.

9.00 Audit and Inspection: The Agency shall permit, and shall require its contractors to permit, the Department's authorized representatives to inspect all work, materials, payrolls, records; and to audit the books, records and accounts pertaining to the financing and development of the project.

10.00 Contracts of the Agency:

10.10 Third Party Agreements: The Department specifically reserves the right to review and approve any and all third party contracts with respect to the Project before the Agency executes or obligates itself in any manner requiring the disbursement of Department funds, including consultant, purchase of commodities contracts or amendments thereto. If the Department chooses to review and approve third party contracts for this Project and the Agency fails to obtain such approval, that shall be sufficient cause for nonpayment by the Department as provided in Section 7.23. The Department specifically reserves unto itself the right to review the qualifications of any consultant or contractor and to approve or disapprove the employment of the same. If Federal Transit Administration (FTA) funds are used in the project, the Department must exercise the right to third party contract review.

10.20 Procurement of Personal Property and Services:

10.21 Compliance with Consultants' Competitive Negotiation Act: It is understood and agreed by the parties hereto that participation by the Department in a project with an Agency, where said project involves a consultant contract for engineering, architecture or surveying services, is contingent on the Agency complying in full with provisions of Chapter 287.055, F.S., Consultants' Competitive Negotiation Act. At the discretion of the Department, the Agency will involve the Department in the Consultant Selection Process for all contracts. In all cases, the Agency's Attorney shall certify to the Department that selection has been accomplished in compliance with Chapter 287.055, F.S., the Consultants' Competitive Negotiation Act.

10.22 Procurement of Commodities or Contractual Services: It is understood and agreed by the parties hereto that participation by the Department in a project with an Agency, where said project involves the purchase of commodities or contractual services or the purchasing of capital equipment or the constructing and equipping of facilities, which includes engineering, design, and/or construction activities, where purchases or costs exceed the Threshold Amount for CATEGORY TWO per Chapter 287.017 F.S., is contingent on the Agency complying in full with the provisions of Chapter 287.057 F.S. The Agency's Attorney shall certify to the Department that the purchase of commodities or contractual services has been accomplished in compliance with Chapter 287.057 F.S. It shall be the sole responsibility of the Agency to ensure that any obligations made in accordance with this Section comply with the current threshold limits. Contracts, purchase orders, task orders, construction change orders, or any other agreement that would result in exceeding the current budget contained in Exhibit "B", or that is not consistent with the project description and scope of services contained in Exhibit "A" must be approved by the Department prior to Agency execution. Failure to obtain such approval, and subsequent execution of an amendment to the Agreement if required, shall be sufficient cause for nonpayment by the Department as provided in Section 7.23.

10.30 Disadvantaged Business Enterprise (DBE) Policy:

10.31 DBE Policy: The contractor, sub recipient or subcontractor shall not discriminate on the basis of race, color, national origin, or sex in the performance of this contract. The contractor shall carry out applicable requirements of 49 CFR part 26 in the award and administration of DOT-assisted contracts. Failure by the contractor to carry out these requirements is a material breach of this contract, which may result in the termination of this contract or such other remedy as the recipient deems appropriate.

The recipient shall not discriminate on the basis of race, color, national origin, or sex in the award and performance of any DOT-assisted contract or in the administration of its DBE program or the requirements of 49 CFR part 26. The recipient shall take all necessary and reasonable steps under 49 CFR part 26 to ensure nondiscrimination in the award and administration of DOT-assisted contracts. The recipient's DBE program, as required by 49 CFR part 26 and as approved by DOT, is incorporated by reference in this agreement. Implementation of this program is a legal obligation and failure to carry out its terms shall be treated as a violation of this agreement. Upon notification to the recipient of its failure to carry out its approved program, the Department may impose sanctions as provided for under part 26 and may, in appropriate cases, refer the matter for enforcement under 18 U.S.C. 1001 and/or the Program Fraud Civil Remedies Act of 1986 (31 U.S.C. 3801 *et seq.*)

10.40 The Agency agrees to report any reasonable cause notice of noncompliance based on 49 CFR Part 26 filed under this section to the Department within 30 days of receipt by the Agency.

11.00 Restrictions, Prohibitions, Controls, and Labor Provisions:

11.10 Equal Employment Opportunity: In connection with the carrying out of any project, the Agency shall not discriminate against any employee or applicant for employment because of race, age, creed, color, sex or national origin. The Agency will take affirmative action to ensure that applicants are employed, and that employees are treated during employment, without regard to their race, age, creed, color, sex, or national origin. Such action shall include, but not be limited to, the following: Employment upgrading, demotion, or transfer; recruitment or recruitment advertising; layoff or termination; rates of pay or other forms of compensation; and selection for training, including apprenticeship. The Agency shall insert the foregoing provision modified only to show the particular contractual relationship in all its contracts in connection with the development or operation of the project, except contracts for standard commercial supplies or raw materials, and shall require all such contractors to insert a similar provision in all subcontracts, except subcontracts for standard commercial supplies or raw materials. When the project involves installation, construction, demolition, removal, site improvement, or similar work, the Agency shall post, in conspicuous places available to employees and applicants for employment for project work, notices to be provided by the Department setting forth the provisions of the nondiscrimination clause.

11.20 Title VI - Civil Rights Act of 1964: Execution of this Joint Participation Agreement constitutes a certification that the Agency will comply with all the requirements imposed by Title VI of the Civil Rights Act of 1964 (42 U.S.C. 2000d, et. seq.), the Regulations of the Federal Department of Transportation issued thereunder, and the assurance by the Agency pursuant thereto.

11.30 Title VIII - Civil Rights Act of 1968: Execution of this Joint Participation Agreement constitutes a certification that the Agency will comply with all the requirements imposed by Title VIII of the Civil Rights Act of 1968, 42 USC 3601,et seq., which among other things, prohibits discrimination in employment on the basis of race, color, national origin, creed, sex, and age.

11.40 Americans with Disabilities Act of 1990 (ADA): Execution of this Joint Participation Agreement constitutes a certification that the Agency will comply with all the requirements imposed by the ADA (42 U.S.C. 12102, et. seq.), the regulations of the federal government issued thereunder, and the assurance by the Agency pursuant thereto.

11.50 Prohibited Interests: The Agency shall not enter into a contract or arrangement in connection with the project or any property included or planned to be included in the project, with any officer, director or employee of the Agency, or any business entity of which the officer, director or employee or the officer's, director's or employee's spouse or child is an officer, partner, director, or proprietor or in which such officer, director or employee or the officer's, director's or employee's spouse or child, or any combination of them, has a material interest.

"Material Interest" means direct or indirect ownership of more than 5 percent of the total assets or capital stock of any business entity.

The Agency shall not enter into any contract or arrangement in connection with the project or any property included or planned to be included in the project, with any person or entity who was represented before the Agency by any person who at any time during the immediately preceding two years was an officer, director or employee of the Agency.

The provisions of this subsection shall not be applicable to any agreement between the Agency and its fiscal depositories, any agreement for utility services the rates for which are fixed or controlled by the government, or any agreement between the Agency and an agency of state government.

11.60 Interest of Members of, or Delegates to, Congress: No member or delegate to the Congress of the United States, or the State of Florida legislature, shall be admitted to any share or part of the Agreement or any benefit arising therefrom.

12.00 Miscellaneous Provisions:

12.10 Environmental Regulations: Execution of this Joint Participation Agreement constitutes a certification by theAgency that the project will be carried out in conformance with all applicable environmental regulations including the securing of any applicable permits. The Agency will be solely responsible for any liability in the event of non-compliance with applicable environmental regulations, including the securing of any applicable permits, and will reimburse the Department for any loss incurred in connection therewith.

12.20 Department Not Obligated to Third Parties: The Department shall not be obligated or liable hereunder to any party other than the Agency.

12.30 When Rights and Remedies Not Waived: In no event shall the making by the Department of any payment to the Agency constitute or be construed as a waiver by the Department of any breach of covenant or any default which may then exist, on the part of the Agency, and the making of such payment by the Department while any such breach or default shall exist shall in no way impair or prejudice any right or remedy available to the Department with respect to such breach or default.

12.40 How Agreement Is Affected by Provisions Being Held Invalid: If any provision of this Agreement is held invalid, the remainder of this Agreement shall not be affected. In such an instance the remainder would then continue to conform to the terms and requirements of applicable law.

12.50 Bonus or Commission: By execution of the Agreement the Agency represents that it has not paid and, also, agrees not to pay, any bonus or commission for the purpose of obtaining an approval of its application for the financing hereunder.

12.60 State or Territorial Law: Nothing in the Agreement shall require the Agency to observe or enforce compliance with any provision thereof, perform any other act or do any other thing in contravention of any applicable State law: Provided, that if any of the provisions of the Agreement violate any applicable State law, the Agency will at once notify the Department in writing in order that appropriate changes and modifications may be made by the Department and the Agency to the end that the Agency may proceed as soon as possible with the project.

12.70 Use and Maintenance of Project Facilities and Equipment: The Agency agrees that the project facilities and equipment will be used by the Agency to provide or support public transportation for the period of the useful life of such facilities and equipment as determined in accordance with general accounting principles and approved by the Department. The Agency further agrees to maintain the project facilities and equipment in good working order for the useful life of said facilities or equipment.

12.71 Property Records: The Agency agrees to maintain property records, conduct physical inventories and develop control systems as required by 49 CFR Part 18, when applicable.

12.80 Disposal of Project Facilities or Equipment: If the Agency disposes of any project facility or equipment during its useful life for any purpose except its replacement with like facility or equipment for public transportation use, the Agency will comply with the terms of 49 CFR Part 18 relating to property management standards. The Agency agrees to remit to the Department a proportional amount of the proceeds from the disposal of the facility or equipment. Said proportional amount shall be determined on the basis of the ratio of the Department financing of the facility or equipment as provided in this Agreement.

12.90 Contractual Indemnity: To the extent provided by law, the Agency shall indemnify, defend, and hold harmless the Department and all of its officers, agents, and employees from any claim, loss, damage, cost, charge, or expense arising out of any act, error, omission, or negligent act by the Agency, its agents, or employees, during the performance of the Agreement, except that neither the Agency, its agents, or its employees will be liable under this paragraph for any claim, loss, damage, cost, charge, or expense arising out of any act, error, omission, or negligent act by the Department or any of its officers, agents, or employees during the performance of the Agreement.

When the Department receives a notice of claim for damages that may have been caused by the Agency in the performance of services required under this Agreement, the Department will immediately forward the claim to the Agency. The Agency and the Department will evaluate the claim and report their findings to each other within fourteen (14) working days and will jointly discuss options in defending the claim. After reviewing the claim, the Department will determine whether to require the participation of the Agency in the defense of the claim or to require that the Agency defend the Department in such claim as described in this section. The Department's failure to promptly notify the Agency of a claim shall not act as a waiver of any right herein to require the participation in or defense of the claim by Agency. The Department and the Agency will each pay its own expenses for the evaluation, settlement negotiations, and trial, if any. However, if only one party participates in the defense of the claim at trial, that party is responsible for all expenses at trial.

13.00 Plans and Specifications: In the event that this Agreement involves the purchasing of capital equipment or the constructing and equipping of facilities, where plans and specifications have been developed, the Agency shall provide an Engineer's Certification that certifies project compliance as listed below, or in Exhibit "C" if applicable. For the plans, specifications, construction contract documents, and any and all other engineering, construction, and contractual documents produced by the Engineer, hereinafter collectively referred to as "plans", the Agency will certify that:

a. All plans comply with federal, state, and professional standards as well as minimum standards established by the Department as applicable;

b. The plans were developed in accordance with sound engineering and design principles, and with generally accepted professional standards;

c. The plans are consistent with the intent of the project as defined in Exhibits "A" and "B" of this Agreement as well as the Scope of Services; and

d. The plans comply with all applicable laws, ordinances, zoning and permitting requirements, public notice requirements, and other similar regulations.

Notwithstanding the provisions of this paragraph, the Agency, upon request by the Department, shall provide plans and specifications to the Department for review and approvals.

14.00 Project Completion, Agency Certification: The Agency will certify in writing on or attached to the final invoice, that the project was completed in accordance with applicable plans and specifications, is in place on the Agency facility, that adequate title is in the Agency and that the project is accepted by the Agency as suitable for the intended purpose.

15.00 Appropriation of Funds:

15.10 The State of Florida's performance and obligation to pay under this Agreement is contingent upon an annual appropriation by the Legislature.

15.20 Multi-Year Commitment: In the event this Agreement is in excess of $25,000 and has a term for a period of more than one year, the provisions of Chapter 339.135(6)(a), F.S., are hereby incorporated: "(a) The Department, during any fiscal year, shall not expend money, incur any liability, or enter into any contract which, by its terms involves the expenditure of money in excess of the amounts budgeted as available for expenditure during such fiscal year. Any contract, verbal or written, made in violation of this subsection is null and void, and no money may be paid on such contract. The Department shall require a statement from the comptroller of the Department that funds are available prior to entering into any such contract or other binding commitment of funds. Nothing herein contained shall prevent the making of contracts for periods exceeding 1 year, but any contract so made shall be executory only for the value of the services to be rendered or agreed to be paid for in succeeding fiscal years; and this paragraph shall be incorporated verbatim in all contracts of the Department which are for an amount in excess of 25,000 dollars and which have a term for a period of more than 1 year."

16.00 Expiration of Agreement: The Agency agrees to complete the project on or before 12/31/2018. If the Agency does not complete the project within this time period, this Agreement will expire unless an extension of the time period is requested by the Agency and granted in writing by the Secretary or Designee. Expiration of this Agreement will be considered termination of the project and the procedure established in Section 8.00 of this Agreement shall be initiated.

16.10 Final Invoice: The Agency must submit the final invoice on this project to the Department within 120 days after the expiration of this Agreement.

17.00 Agreement Format: All words used herein in the singular form shall extend to and include the plural. All words used in the plural form shall extend to and include the singular. All words used in any gender shall extend to and include all genders.

18.00 Execution of Agreement: This Agreement may be simultaneously executed in a minimum of two counterparts, each of which so executed shall be deemed to be an original, and such counterparts together shall constitute one in the same instrument.

19.00 Restrictions on Lobbying:

19.10 Federal: The Agency agrees that no federal appropriated funds have been paid or will be paid by or on behalf of the Agency, to any person for influencing or attempting to influence any officer or employee of any federal agency, a Member of Congress, an officer or employee of Congress, or an employee of a Member of Congress in connection with the awarding of any federal contract, the making of any federal grant, the making of any federal loan, the entering into of any cooperative agreement, and the extension, continuation, renewal, amendment or modification of any federal contract, grant, loan or cooperative agreement.

If any funds other than federal appropriated funds have been paid by the Agency to any person for influencing or attempting to influence an officer or employee of any federal agency, a Member of Congress, an officer or employee of Congress, or an employee of a Member of Congress in connection with this Joint Participation Agreement, the undersigned shall complete and submit Standard Form-LLL, "Disclosure Form to Report Lobbying," in accordance with its instructions.

The Agency shall require that the language of this section be included in the award documents for all sub-awards at all tiers (including subcontracts, sub-grants, and contracts under grants, loans and cooperative agreements) and that all sub-recipients shall certify and disclose accordingly.

19.20 State: No funds received pursuant to this contract may be expended for lobbying the Legislature or a state agency.

20.00 Vendors Rights: Vendors (in this document identified as Agency) providing goods and services to the Department should be aware of the following time frames. Upon receipt, the Department has five (5) working days to inspect and approve the goods and services unless the bid specifications, purchase order or contract specifies otherwise. The Department has 20 days to deliver a request for payment (voucher) to the Department of Financial Services. The 20 days are measured from the latter of the date the invoice is received or the goods or services are received, inspected and approved.

If a payment is not available within 40 days after receipt of the invoice and receipt, inspection and approval of goods and services, a separate interest penalty in accordance with Section 215.422(3)(b), F.S. will be due and payable, in addition to the invoice amount to the Agency. The interest penalty provision applies after a 35 day time period to health care providers, as defined by rule. Interest penalties of less than one (1) dollar will not be enforced unless the Agency requests payment. Invoices which have to be returned to an Agency because of vendor preparation errors will result in a delay in the payment. The invoice payment requirements do not start until a properly completed invoice is provided to the Department.

A Vendor Ombudsman has been established within the Department of Financial Services. The duties of this individual include acting as an advocate for Agencies who may be experiencing problems in obtaining timely payment(s) from the Department. The Vendor Ombudsman may be contacted at (850) 413-5516 or by calling the Division of Consumer Services at 1-877-693-5236.

21.00 Public Entity Crime: A person or affiliate who has been placed on the convicted vendor list following a conviction for a public entity crime may not submit a bid on a contract to provide any goods or services to a public entity, may not submit a bid on a contract with a public entity for the construction or repair of a public building or public work, may not submit bids on leases of real property to a public entity, may not be awarded or perform work as a contractor, supplier, subcontractor, or consultant under a contract with any public entity, and may not transact business with any public entity in excess of the threshold amount provided in s. 287.017, F.S. for CATEGORY TWO for a period of 36 months from the date of being placed on the convicted vendor list.

22.00 Discrimination: An entity or affiliate who has been placed on the discriminatory vendor list may not submit a bid on a contract to provide any goods or services to a public entity, may not submit a bid on a contract with a public entity for the construction or repair of a public building or public work, may not submit bids on leases of real property to a public entity, may not be awarded or perform work as a contractor, supplier, subcontractor, or consultant under a contract with any public entity, and may not transact business with any public entity.

23.00 E-Verify:

Vendors/Contractors:

1. shall utilize the U.S. Department of Homeland Security's E-Verify system to verify the employment eligibility of all new employees hired by the Vendor/Contractor during the term of the contract; and

2. shall expressly require any subcontractors performing work or providing services pursuant to the state contract to likewise utilize the U.S. Department of Homeland Security's E-Verify system to verify the employment eligibility of all new employees hired by the subcontractor during the contract term.

IN WITNESS WHEREOF, the parties hereto have caused these presents be executed, the day and year first above written.

AGENCY

Port of Key West, City of Key West
AGENCY NAME

James K. Scholl
SIGNATORY (PRINTED OR TYPED)

JK Scholl
SIGNATURE

City Manager
TITLE

FDOT

DEPARTMENT OF TRANSPORTATION

District Director of Transportation Development
TITLE

LEGAL REVIEW
DEPARTMENT OF TRANSPORTATION

See attached Encumbrance Form for date of Funding Approval by Comptroller

TO: CFMSection@dot.state.fl.us 10324575
SUBJECT: FUNDS APPROVAL/REVIEWED FOR CONTRACT ARJ38

STATE OF FLORIDA DEPARTMENT OF TRANSPORTATION
FUNDS APPROVAL

Contract #ARJ38 Contract Type: Method of Procurement:
Vendor Name: CITY OF KEY WEST
Vendor ID: VF596000346036
Beginning date of this Agmt: 07/10/14
Ending date of this Agmt: 06/30/19

```
**********************************************************************
ORG-CODE      *EO  *OBJECT *AMOUNT            *FIN PROJECT  *FCT  *CFDA
(FISCAL YEAR)      *BUDGET ENTITY             *CATEGORY/CAT YEAR
AMENDMENT ID       *SEQ.   *USER ASSIGNED ID *HNC LINE(68)/STATUS
**********************************************************************
```

Action: ORIGINAL Funds have been: APPROVED

```
55 062020629 *PT  *750005  *      762000.00 *43503519401  *215  *
2015              *55100100                 *088794/15
0001              *00      *                *0001/04
----------------------------------------------------------------------
         TOTAL AMOUNT:   *$      762,000.00 *
----------------------------------------------------------------------
```

FUNDS APPROVED/REVIEWED FOR ROBIN M. NAITOVE, CPA, COMPTROLLER
DATE: 07/14/2014

FINANCIAL PROJECT NO. 43503519401
CONTRACT NO. ARJ38

EXHIBIT A
PROJECT DESCRIPTION AND RESPONSIBILITIES

This exhibit forms an integral part of that certain Joint Participation Agreement between the State of Florida, Department of Transportation and

Port of Key West, City of Key West
P.O. Box 1409
Key West, FL 33041-1409

referenced by the above Financial Project Number.

PROJECT LOCATION:

Port of Key West, Key West, Florida

PROJECT DESCRIPTION:

To improve the mooring structures and fenders to take the berthing loads off the Mallory T-Pier by meeting the structural load capacity needs of the cruise ships. The north 25% of the pier demolish and a new structural mooring dolphin will be constructed in its place. The dolphin will also be utilized for passenger and crew access to the ships.

SPECIAL CONSIDERATIONS BY AGENCY:

The audit report(s) required in paragraph 7.60 of the Agreement shall include a schedule of project assistance that will reflect the Department's contract number, Financial Project Number and the Federal Identification number, where applicable, and the amount of state funding action (receipt and disbursement of funds) and any federal or local funding action and the funding action from any other source with respect to the project.

The Agency shall submit two (2) copies of a Single Audit report as required and shown in Paragraph 7.60. Failure to provide the required report will result in non-payment by the Department.

Funds encumbered for this contract will be forfeited if not expended by March 31 of the fifth fiscal year following the fiscal year of the encumbrance. Forfeiture of said funds may further result in termination or voidance of the contract.

SPECIAL CONSIDERATIONS BY DEPARTMENT: None

FINANCIAL PROJECT NO. 43503519401
CONTRACT NO. ARJ38

EXHIBIT B
PROJECT BUDGET

This exhibit forms an integral part of that certain Joint Participation Agreement between the State of Florida, Department of Transportation and

Port of Key West, City of Key West
P.O. Box 1409
Key West, FL 33041-1409

referenced by the above Financial Project Number.

I.	ESTIMATE PROJECT COST:			$1,237,500.00
	ESTIMATED TOTAL PROJECT COST:			$1,237,500.00
II.	PARTICIPATION:			
	Maximum Federal Participation FTA, FAA	(%)	or	$
	Agency Participation In-Kind Cash Other	(%)	or	$475,000.00
	Maximum Department Participation,* Primary (DS)(DDR)(DIM)(PORT) Federal Reimbursable (DU)(FRA)(DFTA) Local Reimbursable (DL)	(%) up to		$762,000.00
	ESTIMATED TOTAL PROJECT COST			$1,237,500.00

"It is the intent of the Department to reimburse the Agency 50% for SIS funds only and 75% of the total non-federal share of eligible project cost up to the Departments maximum participation amount".

FINANCIAL PROJECT NO. 43503519401
CONTRACT NO. ARJ38

EXHIBIT C
GENERAL

This exhibit forms an integral part of that certain Joint Participation Agreement between the State of Florida, Department of Transportation and

Port of Key West, City of Key West
P.O. Box 1409
Key West, FL 33041-1409

This Agreement is in conformance with Chapter 311, Florida Statutes.

A. Cost incurred after the execution date of this agreement shall be eligible for reimbursement under this Agreement.

B. The Agency must submit an invoice to the Department on later than One Hundred Twenty (120) days after the period of the services covered by said invoice, failure to do so will result in this invoice being rejected.

C. The Agency must submit the Final invoice to the Department no later than One Hundred Twenty (120) days after the period of services covered by said invoice, failure to do so will result in this invoice not being paid.

D. The Agency shall not execute any Third-Party Contract without the prior written concurrence of the Department. Method of procurement must comply with all federal, state and local laws and regulations.

E. The Department requires an audit of the completed project to assure proper use of the funds from the Department, the Agency and those from any other source with respect to the Project. Audits shall be performed in accordance with Office of Management and Budget (OMB) Circular A – 133 and may be supplemented by audits performed by the Department's Office of Inspector General.

FINANCIAL PROJECT NO. 43503519401
CONTRACT NO. ARJ38

EXHIBIT D
AUDIT

FEDERAL and/or **STATE** resources awarded to the recipient pursuant to this agreement should be listed below. If the resources awarded to the recipient represent more than one Federal or State program, provide the same information for each program and the total resources awarded. **Compliance Requirements** applicable to each Federal or State program should also be listed below. If the resources awarded to the recipient represent more than one program, list applicable compliance requirements for each program in the same manner as shown here:

- (e.g., Eligibility requirements for recipients of the resources)
- (Etc…)

NOTE: Instead of listing the specific compliance requirements as shown above, the State awarding agency may elect to use language that requires the recipient to comply with the requirements of applicable provisions of specific laws, rules, regulations, etc. The State awarding agency, if practical, may want to attach a copy of the specific law, rule, or regulation referred to.

FEDERAL RESOURCES

Federal Agency	Catalog of Federal Domestic Assistance (Number & Title)	Amount

Compliance Requirements
1
2.
3.

STATE RESOURCES

State Agency	Catalog of Federal Domestic Assistance (Number & Title)	Amount
FDOT	55.005 Seaport Grant	$762,000.00

Compliance Requirements

1. In developing audit procedures to test compliance with the requirements for a state project, the auditor should first look to Part Two, Matrix of Compliance Requirements, to identify which of the 10 types of compliance requirements described in Part Three of the Compliance Supplement are applicable and then look to Parts Three and Four for the details of the requirements.

NOTE: Section .400(d) of OMB Circular A-133, as revised, and Section 215.97(5)(a), Florida Statutes, require that the information about Federal Programs and State Projects included in this exhibit be provided to the recipient.

SECTION 01 01 00
GENERAL REQUIREMENTS

PART 1 PROJECT DESCRIPTION

1.01 GENERAL

A. A brief description of the work is stated in the Invitation to Bid. To determine the full scope of the project or any particular part of the project, coordinate the applicable information in the several parts of these Contract Documents.

B. The work under this Contract shall be performed by the Contractor as required by the Owner. Work will be authorized in the form of a Notice to Proceed issued to the Contractor. The Contractor shall complete all work in the Contract within the number of calendar days stipulated in the Contract unless an extension in the time of completion is granted by the Engineer, as stated in the Instructions to Bidders. Upon completion of the work and compliance with applicable provisions in the Contract Documents, the Contractor will receive final payment for all work done.

C. The following additional information, though not all-inclusive, is given to assist contractors in their evaluation of the work required to meet the project objectives.

D. This Project will provide Owner with a new bulkhead at Zero Duval and modified mooring and pier at Mallory Square.

E. The work is likely to be influenced by the tides. The tides can have an effect on the timing and work schedule. No extra claims shall be made for the tides or for other natural causes.

F. The Contractor shall become familiar with the existing operating conditions of the Owner's facilities and take such into consideration in planning and scheduling work. No extra claims shall be made for work required to achieve conditions beyond those obtainable under normal operation of the existing sanitary facilities necessary to accomplish the Work.

G. The Contractor shall be responsible for providing a licensed surveyor registered in the State of Florida. Surveyor shall verify all benchmarks used during survey.

H. Contractor shall adhere to and provide equipment, resources and construction methods that meet all requirements of the provided Environmental permits both ACOE and FDEP as provided in Part 4 of this package.

©COPYRIGHT 2016 CH2M HILL

I. Contractor shall be responsible to prepare, apply for and obtain SWPPP, Water Use and Dewatering permits for construction activities on this project.

PART 2 SEQUENCE OF OPERATIONS

2.01 SCHEDULING

A. General:

1. Submit estimated progress schedule and preliminary schedule of submittals in duplicate to Engineer. Updated progress schedules and submittal schedules shall be submitted with each partial pay request.
2. Revise and resubmit as specified, and identify all changes made from previous schedule submittal.

B. Construction Schedule:

1. Within 10 days following approval of the Shop Drawings and after establishment of equipment delivery dates the Contractor shall provide a bar chart analysis of the required construction work for the Project. All activities should be shown along with the required time to do the work in a proper and continuous sequence of operation and without delays.
2. Show complete sequence of construction by activity, identifying work of separate stages, and other logically grouped activities. Indicate dates for early and late start, early and late finish, float, and duration.
3. Any contingency within the schedule (i.e., a difference in time between the project's early completion and required Contract completion date) and the float in the overall project schedule will belong to the project and not to the parties to the Contract. Contractor shall not sequester shared float through such strategies as extending duration estimates to consume available float time, extensive crew/resource sequencing, etc.
4. Provide a workable plan for monitoring the progress of all elements of the work, establish the critical elements of work, and forecast potential problems in maintaining the specified completion dates.

C. Schedule of Submittals:

1. Schedule of Submittals: Indicate submittals required by Specification section number with brief description, starting and completion dates for respective submittal preparation, and submittal review by Engineer.
2. Indicate product manufacture and delivery dates.

D. Plan the work and carry it out with minimum interference to the operation of the existing facilities. Prior to starting the work, confer with the Engineer and Owner's representative to develop an approved work schedule which will permit the facilities to function normally as practical. It may be necessary to do certain parts of the construction work outside normal working hours in

©COPYRIGHT 2016 CH2M HILL

order to avoid undesirable conditions. The Contractor shall do this work at such times, and at no additional cost to the Owner. Do not make connections between existing work and new work until necessary inspection and tests have been completed on the new work and it is found to conform in all respects to the requirements of the Contract Documents.

E. No work shall be started until the Contractor has received approved shop drawings, established material/delivery dates for all equipment, and received approval of the construction schedule from the Engineer. The Contractor shall have sufficient manpower, equipment, and material to complete the Project. No work shall commence without express consent of the Engineer.

2.02 COORDINATION

A. Contractors shall cooperate in the coordination of their separate activities in a manner that will provide the least interference with the Owner's operations and other contractors and utility companies working in the area, and in the interfacing and connection of the separate elements of the overall Project work.

B. If any difficulty or dispute should arise in the accomplishment of the above, the problem shall be brought immediately to the attention of the Engineer.

C. All contractors working on the site are subject to this requirement for cooperation and all shall abide by the Engineer’s decision in resolving project coordination problems without additional cost to the Owner.

D. Contractor may be asked to stop work during Special Events. No work will be allowed for intersections (To Be Determined) on days corresponding to the events. All material and equipment shall be totally off all streets by 5:00 p.m. the day before. Contractor is responsible to obtain a schedule of Special Events from the Owner. A preliminary schedule is included in Exhibit K of Section 00 73 00.

2.03 SHUTDOWN OF EXISTING OPERATIONS OR UTILITIES

A. Continuous operation of the Owner's existing wastewater system are of critical importance. The Contractor's work shall not result in the interruption of stormwater disposal, sewage, water, or solid waste service to any customers.

B. Any work that requires the temporary shutdown of any existing operations or utilities shall be planned in detail with appropriate scheduling of the work and coordinated with the utility, Owner, and Engineer. Advance notice shall be given in order that the utility, Owner, and Engineer may witness the shutdown, tie-in, and startup. The temporary shutdown must be approved by the Owner. All tie in and bypass operations shall be the responsibility of the

©COPYRIGHT 2016 CH2M HILL

Contractor and are considered incidental to the cost of construction and provided at no additional cost to the Owner.

C. All materials and equipment (including emergency equipment) necessary to expedite the tie-in shall be on hand prior to the shutdown of existing services or utilities.

2.04 OPERATION OF EXISTING SYSTEM PROHIBITED

A. At no time undertake to close off any utility lines or open valves or take any other action which would affect the operation of the existing utility systems, except as specifically required by the Drawings and Specifications and after approval is granted by the Owner or Facility Owner. Request approval 5 working days in advance of the time that interruption of the existing system is required. Florida Key Aqueduct Authority (FKAA) water valves can be operated only by FKAA personnel.

2.05 PROGRESS OF CONSTRUCTION

A. ***No*** excavated material shall be cast on streets or adjacent sidewalks.

B. Cleanup construction debris, excess excavation, excess materials, and completely restore fences, mailboxes, ditches, culverts, signposts, and similar items immediately following the final backfilling.

PART 3 SITE CONDITIONS

3.01 SITE INVESTIGATION AND REPRESENTATION

A. The Contractor acknowledges satisfaction as to the general nature and location of the work, the general and local conditions, particularly those bearing upon availability of transportation, availability of labor, water, electric power, roads, and uncertainties of weather, river stages, or similar physical conditions, the character of equipment and facilities needed preliminary to and during the prosecution of the work, and all other matters which can in any way affect the work or the cost thereof under this Contract.

B. Failure by the Contractor to become acquainted with the physical conditions and all the available information will not relieve the Contractor from responsibility for properly estimating the difficulty or cost of successfully performing the work.

C. The Contractor warrants that as a result of examination and investigation of all the aforesaid data, the Contractor can perform the work in a good and workmanlike manner and to the satisfaction of the Owner. The Owner assumes no responsibility for any representations made by any of its officers or agents during or prior to the execution of this Contract, unless (1) such

©COPYRIGHT 2016 CH2M HILL

representations are expressly stated in the Contract, and (2) the Contract expressly provides that the responsibility therefore is assumed by the Owner.

3.02 INFORMATION ONSITE CONDITIONS

A. General: Any information obtained by the Engineer regarding site conditions, subsurface information, groundwater elevations, existing construction of site facilities as applicable, and similar data will be available for inspection at the office of the Engineer upon request. Such information is offered as supplementary information only. Neither the Engineer nor the Owner assumes any responsibility for the completeness or interpretation of such supplementary information.

3.03 UTILITIES

A. The Contractor shall be responsible for determining, at his cost, the locations of all utilities within the project area, and shall be responsible for contacting each utility for location and notification prior to commencing work.

3.04 CONTRACTOR'S RESPONSIBILITY FOR UTILITY PROPERTIES AND SERVICE

A. Where the Contractor's operations could cause damage or inconvenience to utilities, telephone, television, power, water, or sewer systems, the operations shall be suspended until all arrangements necessary for the protection of these utilities and services have been made by the Contractor with the owner of the utility affected.

B. Notify all utility offices which are affected by the construction operation at least 48 hours in advance. Under no circumstances expose any utility without first obtaining permission from the appropriate agency. Once permission has been granted, locate, expose, and provide temporary support for all existing underground utilities.

C. The Contractor shall be solely and directly responsible to the Owner and operators of such properties for any damage, injury, expense, loss, inconvenience, delay, suits, actions, or claims of any character brought because of any injuries or damage which may result from the construction operations under this Contract.

D. Neither the Owner nor its officers or agents shall be responsible to the Contractor for damages as a result of the Contractor's failure to protect utilities encountered in the work.

E. In the event of interruption to domestic water, sewer, storm drain, or other utility services as a result of accidental breakage due to construction operations, promptly notify the proper authority. Cooperate with said

©COPYRIGHT 2016 CH2M HILL

authority in restoration of service as promptly as possible and bear all costs of repair. In no case shall interruption of any water or utility service be allowed to exist outside working hours unless prior approval is granted.

F. In the event the Contractor encounters water service lines that interfere with trenching, he may, by obtaining prior approval of the property owner, Florida Keys Aqueduct Authority, or Fire Department as applicable, and the Engineer, cut the service, dig through, and restore the service with similar and equal materials at the Contractor's expense.

G. The Contractor shall replace, at his own expense, all existing utilities or structures removed or damaged during construction, unless otherwise provided for in these Contract documents or ordered by the Engineer.

3.05 INTERFERING STRUCTURES

A. Take necessary precautions to prevent damage to existing structures whether on the surface, aboveground, or underground.

B. Protect underground and aboveground existing structures from damage, whether or not they lie within the limits of the easements obtained by the Owner. Where such existing fences, gates, sheds, buildings, or any other structure must be removed in order to properly carry out the construction, or are damaged during construction, restore to their original condition to the satisfaction of the property owner involved at the Contractor's own expense. Notify the Engineer of any damaged underground structure, and make repairs or replacements before backfilling.

C. Without additional compensation, the Contractor may remove and replace in a condition as good as or better than original, such small miscellaneous structures as fences, mailboxes, and signposts that interfere with the Contractor's operations.

3.06 FIELD RELOCATION

A. During the progress of construction, it is expected that minor relocations of the work will be necessary. Such relocations shall be made only by direction of the Engineer. If existing structures are encountered which prevent the construction, and which are not properly shown on any Contract Drawings, notify the Engineer before continuing with the construction in order that the Engineer may make such field revisions as necessary to avoid conflict with the existing structures. If the Contractor shall fail to so notify the Engineer when an existing structure is encountered, and shall proceed with the construction despite this interference, he shall do so at his own risk.

3.07 EASEMENTS

©COPYRIGHT 2016 CH2M HILL

A. Where portions of the work are located on public or private property, easements and permits will be obtained by the Owner, except as otherwise noted in these Specifications. Easements will provide for the use of property for construction purposes to the extent indicated on the easements. Copies of these easements and permits are available upon request to the Owner. It shall be the Contractor's responsibility to determine the adequacy of the easement obtained in every case and to abide by all requirements and provisions of the easement. The Contractor shall confine his construction operations to within the easement limits or street right-of-way limits or make special arrangements with the property owners or appropriate public agency for the additional area required. Any damage to property, either inside or outside the limits of the easements provided by the Owner or street rights-of-way, shall be the responsibility of the Contractor as specified herein. The Contractor shall remove, protect, and replace all fences or other items encountered on public or private property. Before final payment will be authorized by the Engineer, the Contractor will be required to furnish the Owner with written releases from property owners or public agencies where side agreements or special easements have been made by the Contractor or where the Contractor's operations, for any reason, have not been kept within the construction right-of-way obtained by the Owner or the street right-of-way.

B. It is anticipated that the required easements and permits will be obtained before construction is started. However, should the procurement of any easement or permit be delayed, the Contractor shall schedule and perform the work around these areas until such a time as the easement or permit has been secured.

3.08 PROTECTED VEGETATION

A. Trees and shrubs are regulated and protected in Key West. All trimming and pruning shall be done in accordance with City guidelines. This work will be considered incidental to the Project costs. Contractor shall obtain such guidelines and gain approvals before commencing work.

PART 4 TEMPORARY CONSTRUCTION UTILITIES AND FACILITIES

4.01 TEMPORARY WATER

A. The Contractor shall make his own arrangements to obtain suitable water and shall pay all costs.

4.02 TEMPORARY ELECTRIC POWER

A. The Contractor shall make arrangements to obtain and pay for electrical power used until final acceptance by the Owner.

©COPYRIGHT 2016 CH2M HILL

4.03 SAFETY REQUIREMENTS FOR TEMPORARY ELECTRIC POWER

A. Temporary electric power installation shall meet the construction safety requirements of OSHA, state and other governing agencies.

4.04 SANITARY FACILITIES

A. The Contractor shall provide and maintain sanitary facilities for his employees and his subcontractors that will comply with the regulations of the local and state departments of health and as directed by the Engineer.

4.05 STORAGE OF MATERIALS

A. Materials shall be stored based on manufacturer's instructions including pre- and post-storage meggering as to ensure the preservation of their quality and fitness for the work. When considered necessary they shall be placed on wooden platforms or other hard, clean surfaces, and not on the ground. Stored materials shall be located so as to facilitate prompt inspection. Private property shall not be used for storage purposes without the written permission of the Owner or lessee.

B. Delicate instruments and materials subject to vandalism shall be placed under locked cover and, if necessary, provided with temperature control as recommended by the manufacturer.

PART 5 SAFETY AND CONVENIENCE

5.01 SAFETY EQUIPMENT

A. The Contractor shall do all work necessary to protect the general public from hazards, including, but not limited to, surface irregularities or unramped grade changes in pedestrian sidewalk or walkway, and trenches or excavations in roadway. Barricades, lanterns, and proper signs shall be furnished in sufficient amount to safeguard the public and the work. All barricades and signs shall be clean and serviceable, in the opinion of the Engineer.

B. During construction, the Contractor shall construct and at all times maintain satisfactory and substantial temporary chain link fencing, solid fencing, railing, barricades or steel plates, as applicable, at all openings, obstructions, or other hazards in streets, sidewalks, floors, roofs, and walkways. All such barriers shall have adequate warning lights as necessary, or required, for safety. All lights shall be regularly maintained, and in a fully operational state at all times.

5.02 ACCIDENT REPORTS

©COPYRIGHT 2016 CH2M HILL

A. In addition, the Contractor must promptly report in writing to the Engineer all accidents whatsoever arising out of, or in connection with, the performance of the work whether on, or adjacent to, the site, giving full details and statements of witnesses. If death or serious injuries or serious damages are caused, the accident shall be reported immediately by telephone or messenger to the Engineer.

B. If a claim is made by anyone against the contractor or any subcontractor on account of any accident, the Contractor shall promptly report the facts in writing to the Engineer, giving full details of the claim.

5.03 SAFE ACCESS BY FEDERAL, STATE, AND LOCAL GOVERNMENT OFFICIALS

A. Authorized representatives of the state, federal, or local governmental agencies, shall at all times have safe access to the work, and the Contractor shall provide proper facilities for such access and inspection.

5.04 TRAFFIC MAINTENANCE AND SAFETY

A. Provide traffic maintenance plans where required by federal, state, county, or local agencies having jurisdiction.

B. Comply with all rules and regulations of the state, county, and city authorities regarding closing or restricting the use of public streets or highways. No public or private road shall be closed, except by express permission of the Owner. Conduct the work so as to assure the least possible obstruction to traffic and normal commercial pursuits. Protect all obstructions within traveled roadways by installing approved signs, barricades, and lights where necessary for the safety of the public. The convenience of the general public and residents adjacent to the project, and the protection of persons and property are of prime importance and shall be provided for in an adequate and satisfactory manner.

5.05 PROTECTION OF PROPERTY

A. Protect stored materials located adjacent to the proposed work. Notify property owners affected by the construction at least 48 hours in advance of the time construction begins. During construction operations, construct and maintain such facilities as may be required to provide access by all property owners to their property. No person shall be cut off from access to his residence or place of business for a period exceeding 8 hours, unless the Contractor has made special arrangements with the affected persons.

B. The Contractor shall identify and isolate his work zone in such a manner as to exclude all personnel not employed by him, the Engineer, and the Owner.

©COPYRIGHT 2016 CH2M HILL

5.06 FIRE PREVENTION AND PROTECTION

A. The Contractor shall perform all work in a fire-safe manner. He shall supply and maintain on the site adequate fire-fighting equipment capable of extinguishing incipient fires. The Contractor shall comply with applicable federal, state, and local fire-prevention regulations. Where these regulations do not apply, applicable parts of the National Fire Prevention Standard for Safeguarding Building Construction Operations (NFPA No. 241) shall be followed.

5.07 ACCESS FOR POLICE, FIRE, AND POSTAL SERVICE

A. Notify the fire department and police department before closing any street or portion thereof. No closing shall be made without the Owner's approval. Notify said departments when the streets are again passable for emergency vehicles. Do not block off emergency vehicle access to consecutive arterial crossings or dead-end streets, in excess of 300 linear feet, without special written permission from the fire department. Conduct operations with the least interference to fire equipment access, and at no time prevent such access.

B. The Contractor shall leave a night emergency telephone number or numbers with the police department, the Engineer, and the Owner, so that contact may be made easily at all times in case of barricade and flare trouble or other emergencies.

C. Maintain postal service facilities in accordance with the requirements of the U.S. Postal Service. Move mailboxes to temporary locations designated by the U. S. Postal Service, and at the completion of the work in each area, replace them in their original location and in a condition satisfactory to the U.S. Postal Service.

5.08 CLEANUP PROCEDURES FOR HURRICANE WARNINGS AND HURRICANE WATCHES

A. In the event that the National Oceanographic and Atmospheric Administration (NOAA), issues a hurricane watch for the Florida Keys, the Engineer will contact the Contractor informing him that the watch has been established within 4 hours of the notice. The Contractor shall implement the approved plan and schedule describing how and when the Contractor will remove all unnecessary items from the work area and tie down all remaining supplies and barricades in the event that a hurricane warning is issued. If a warning is issued, the Contractor shall remove all unnecessary items from the work area(s) and shall tie down all movable (under 200 pounds) objects. The Engineer will determine “necessary” items. The Owner will not be liable for any financial hardship or delays caused as a result of demobilization or remobilization due to the above.

©COPYRIGHT 2016 CH2M HILL

PART 6 PRESERVATION, RESTORATION, AND CLEANUP

6.01 SITE RESTORATION AND CLEANUP

A. At all times during the work, keep the premises clean and orderly, and upon completion of the work, repair all damage caused by equipment and leave the project free of rubbish or excess materials of any kind.

B. Stockpile excavated materials in a manner that will cause the least damage to adjacent lawns, grassed areas, gardens, shrubbery, or fences, regardless of whether these are on private property, or on state, county, or city rights-of-way. Remove all excavated materials from grassed and planted areas, and leave these surfaces in a condition equivalent to their original condition.

C. All existing drainage ditches and culverts shall be reopened and graded and natural drainage restored. Restore culverts broken or damaged to their original condition and location as an incidental cost of construction.

D. Upon completion of backfilling operations, hand-rake and drag all former grassed and planted areas, leaving all disturbed areas free from rocks, gravel, clay, or any other foreign material. The finished surface shall conform to the original surface, and shall be free-draining and free from holes, ruts, rough spots, or other surface features detrimental to a seeded area.

6.02 FINISHING OF SITE, BORROW, AND STORAGE AREAS

A. Upon completion of the project, all areas used by the Contractor shall be properly cleared of all temporary structures, rubbish, and waste materials and properly graded to drain and blend in with the abutting property. Areas used for the deposit of waste materials shall be finished to properly drain and blend with the surrounding terrain.

6.03 STREET CLEANUP DURING CONSTRUCTION

A. Thoroughly clean all spilled dirt, gravel, or other foreign material caused by the construction operations from all streets and roads at the conclusion of each day's operation. Sidewalks, unless under construction, shall be kept clear of material, and available for pedestrian use at all times.

6.04 DUST PREVENTION

A. Give all unpaved streets, roads, detours, haul roads or disturbed areas used in the construction area an approved dust-preventive treatment or periodically water to prevent dust. Applicable environmental regulations for dust prevention shall be strictly enforced.

©COPYRIGHT 2016 CH2M HILL

6.05 PRESERVATION OF IRRIGATION AND DRAINAGE DITCHES, AND INLETS

A. After backfilling of the trenches, restore all irrigation and storm drain ditches destroyed, damaged, or otherwise modified during construction to a condition equivalent, in the opinion of the Engineer, to the condition of the ditch before construction. Ditches so reconstructed shall be built in their original locations. All inlets shall be periodically cleaned and kept free of siltation.

PART 7 SUBMITTALS DURING CONSTRUCTION

7.01 RECORD DRAWINGS

A. The Contractor shall maintain a complete set of record drawings to show any items which differ from those shown on Drawings. Such Drawings shall be updated daily and submitted each month with the partial pay request. Final record drawings will be required before substantial completion can be certified and final payment can be made.

B. The Contractor shall keep the Engineer apprised on a weekly basis, by providing Drawing mark-ups of the items that differ.

C. All elevations and coordinates shall be verified by a licensed surveyor. The surveyor shall certify the Record Drawings.

PART 8 PRE- AND POST-CONSTRUCTION VIDEO RECORDINGS

8.01 GENERAL

A. The Contractor shall provide color videos showing the pre-construction site, and the post-construction site. The videos shall be in digital (DVD) format, the video shall indicate on the DVD the date, job title, and brief description of the video and location where the video was taken. Video shall be subject to review and approval by Engineer. Two copies of the video DVD (including the original) shall be delivered to the Engineer as follows:

1. A video shall be taken of the preconstruction conditions, as well as all storage and staging areas, and the property adjacent to the construction sites. Particular emphasis should be directed to roadway conditions as well as all right-of-way features that will be affected by the construction.
2. A video shall be taken of the post-construction conditions and their adjacent properties. Particular emphasis should be directed to roadway conditions as well as all right-of-way features that were affected by the construction.

©COPYRIGHT 2016 CH2M HILL

B. The Following shall be Included with the Video Documentation:

1. Coverage is required within and adjacent to the right-of-way, and easements, and storage, and staging areas where the work is being constructed.
2. Documentation of the conditions of the adjacent properties or any affected structures as a result of the impending construction.
3. Certification as to date work done and by whom.
4. All videos shall be keyed to the construction drawings.

C. Pre-Construction and Post-Construction on Videos shall be Submitted as Follows:

1. Pre-construction videos shall be presented to the Owner at the pre-construction conference.
2. Post-construction videos shall be submitted prior to final project closeout. This submittal is contingent to final payment.

END OF SECTION

©COPYRIGHT 2016 CH2M HILL

©COPYRIGHT 2016 CH2M HILL

SECTION 01 11 00
SUMMARY OF WORK

PART 1 GENERAL

1.01 WORK COVERED BY CONTRACT DOCUMENTS

The project consists of construction at two nearby sites: Mallory Square and Zero Duval, Key West, Florida. At Mallory Square, project consists of demolition of a portion of the Pier "T" deck and construction of a new breasting dolphin with fender using drilled shaft piling and cast-in-place concrete caps with a fender. At Zero Duval, project consists of the temporary removal of the existing wood dock, construction of a new tied back steel sheet pile wall with large outfall pipe, construction of new concrete cap, placement of flowable fill backfill, reinstallation of wood dock, repair of existing outfall pipe and restoration of existing pavers.

PART 2 PRODUCTS (NOT USED)

PART 3 EXECUTION (NOT USED)

END OF SECTION

©COPYRIGHT 2016 CH2M HILL

©COPYRIGHT 2015 CH2M HILL

SECTION 01 29 00
PAYMENT PROCEDURES

PART 1 GENERAL

1.01 SUBMITTALS

A. Informational Submittals:

1. Schedule of Values: Submit on Contractor's standard form.
2. Schedule of Estimated Progress Payments:
   a. Submit with initially acceptable Schedule of Values.
   b. Submit adjustments thereto with Application for Payment.
3. Application for Payment.
4. Final Application for Payment.

1.02 ALLOWANCES

A. Consult with Engineer in selection of products or services. Obtain proposals from Suppliers and offer recommendations.

B. Allowances will be administered in accordance with Paragraph 11.02 of General Conditions.

C. Submit, with application for payment, invoice showing date of purchase, from whom the purchase was made, the date of delivery of the product or service, and the price, including delivery to the Site and applicable taxes.

1.03 SCHEDULE OF VALUES

A. Prepare Schedule of Values for each segment of the Work under the Agreement as follows:

1. Prepare a Schedule of Values for the Zero Duval segment of work under this Contract.

2. Prepare a Schedule of Values for the Mallory Square segment of work under this Contract.

B. Upon request of Engineer, provide documentation to support the accuracy of the Schedule of Values.

C. Unit Price Work: Reflect unit price quantity and price breakdown from conformed Bid Form.

D. Lump Sum Work:

©COPYRIGHT 2016 CH2M HILL

1. Reflect specified contingency allowances and alternates, as applicable.
2. List bonds and insurance premiums, mobilization, demobilization, preliminary and detailed progress schedule preparation, equipment testing, facility startup, and contract closeout separately.

E. An unbalanced or front-end loaded schedule will not be acceptable.

F. Summation of the complete Schedule of Values representing all the Work shall equal the Contract Price.

1.04 SCHEDULE OF ESTIMATED PROGRESS PAYMENTS

A. Show estimated payment requests throughout Contract Times aggregating initial Contract Price.

B. Base estimated progress payments on initially acceptable progress schedule. Adjust to reflect subsequent adjustments in progress schedule and Contract Price as reflected by modifications to the Contract Documents.

1.05 APPLICATION FOR PAYMENT

A. Transmittal Summary Form: Attach one Summary Form with each detailed Application for Payment for each schedule and include Request for Payment of Materials and Equipment on Hand as applicable. Execute certification by authorized officer of Contractor.

B. Use detailed Application for Payment Form provided by Owner.

C. Provide separate Application for Payment form for each schedule as applicable. (See 1.03A of this specification)

D. Include accepted Schedule of Values for each schedule or portion of lump sum Work and the unit price breakdown for the Work to be paid on a unit priced basis.

E. Include separate line item for each Change Order and Work Change Directive executed prior to date of submission. Provide further breakdown of such as requested by Engineer.

F. Preparation:

1. Round values to nearest dollar.
2. Submit Application for Payment, including a Transmittal Summary Form and detailed Application for Payment Form(s) for each schedule as applicable, a listing of materials on hand for each schedule as applicable, and such supporting data as may be requested by Engineer.

©COPYRIGHT 2016 CH2M HILL

1.06 PAYMENT

A. Payment for all Lump Sum Work shown or specified in Contract Documents is included in the Contract Price. Payment will be based on a percentage complete basis for each line item of the accepted Schedule of Values.

1.07 NONPAYMENT FOR REJECTED OR UNUSED PRODUCTS

A. Payment will not be made for following:

1. Loading, hauling, and disposing of rejected material.
2. Quantities of material wasted or disposed of in manner not called for under Contract Documents.
3. Rejected loads of material, including material rejected after it has been placed by reason of failure of Contractor to conform to provisions of Contract Documents.
4. Material not unloaded from transporting vehicle.
5. Defective Work not accepted by Owner.
6. Material remaining on hand after completion of Work.

1.08 PARTIAL PAYMENT FOR STORED MATERIALS AND EQUIPMENT

A. Partial Payment: No partial payments will be made for materials and equipment delivered or stored unless Shop Drawings and preliminary operation and maintenance data is acceptable to Engineer.

B. Final Payment: Will be made only for products incorporated in Work; remaining products, for which partial payments have been made, shall revert to Contractor unless otherwise agreed, and partial payments made for those items will be deducted from final payment.

PART 2 PRODUCTS (NOT USED)

PART 3 EXECUTION (NOT USED)

END OF SECTION

©COPYRIGHT 2016 CH2M HILL

©COPYRIGHT 2016 CH2M HILL

SECTION 01 31 19
PROJECT MEETINGS

PART 1 GENERAL

1.01 GENERAL

A. Engineer will schedule physical arrangements for meetings throughout progress of Work, prepare meeting agenda with regular participant input and distribute with written notice of each meeting, preside at meetings, record minutes to include significant proceedings and decisions, and reproduce and distribute copies of minutes within 5 days after each meeting to participants and parties affected by meeting decisions.

1.02 PRECONSTRUCTION CONFERENCE

A. Contractor shall be prepared to discuss the following subjects, as a minimum:

1. Required schedules (Preliminary Construction Schedule, Schedule of Values, Submittal).
2. Status of Bonds and insurance.
3. Sequencing of critical path work items.
4. Progress payment procedures.
5. Project changes and clarification procedures.
6. Use of site, access, office and storage areas, security and temporary facilities.
7. Major product delivery and priorities.
8. Contractor's safety plan and representative.
9. Preliminary Hurricane Evaluation Plan.

B. Attendees will Include:

1. Owner.
2. Contractor's office representative.
3. Contractor's resident superintendent.
4. Contractor's quality control representative.
5. Subcontractors' representatives whom Contractor may desire or Engineer may request to attend.
6. Owner's representatives.
7. Others as appropriate.

©COPYRIGHT 2016 CH2M HILL

1.03 PROGRESS MEETINGS

A. Engineer will schedule regular progress meetings at Site, conducted monthly to review Work progress, progress schedule, Shop Drawing and Sample submissions schedule, Application for Payment, contract modifications, and other matters needing discussion and resolution.

B. Attendees will Include:

1. Owner's representative(s), as appropriate.
2. Contractor, Subcontractors, and Suppliers, as appropriate.
3. Engineer's representative(s).
4. Others as appropriate.

1.04 QUALITY CONTROL AND COORDINATION MEETINGS

A. Scheduled by Engineer on regular basis and as necessary to review test and inspection reports, and other matters relating to quality control of Work and work of other contractors.

B. Attendees will Include:

1. Contractor.
2. Contractor's designated quality control representative.
3. Subcontractors and Suppliers, as necessary.
4. Owner's representatives.

1.05 PREINSTALLATION MEETINGS

A. When required in individual Specification sections, convene at Site prior to commencing Work of that Section.

B. Require attendance of entities directly affecting, or affected by, Work of that Section.

C. Notify Engineer 4 days in advance of meeting date.

D. Provide suggested agenda to Engineer to include reviewing conditions of installation, preparation and installation or application procedures, and coordination with related Work and work of others.

1.06 OTHER MEETINGS

A. In accordance with Contract Documents and as may be required by Owner and Engineer.

©COPYRIGHT 2016 CH2M HILL

PART 2 PRODUCTS (NOT USED)

PART 3 EXECUTION (NOT USED)

END OF SECTION

©COPYRIGHT 2016 CH2M HILL

©COPYRIGHT 2016 CH2M HILL

SECTION 01 32 00
PROGRESS SCHEDULES

PART 1 GENERAL

1.01 SUBMITTALS

A. Preliminary Progress Schedule: Submit within time specified in paragraph 2.05 of the General Conditions.

B. Detailed Progress Schedule: Submit initial Detailed Progress Schedule within 30 days after Effective Date of the Agreement.

C. Submit with Each Progress Schedule Submission:

1. Contractor's certification that progress schedule submission is the actual schedule being utilized for execution of the Work.
2. Progress Schedule: Four legible copies.
3. Narrative Progress Report: Same number of copies as specified for Progress Schedule.

D. Prior to final payment, submit a final Updated Progress Schedule.

1.02 PRELIMINARY PROGRESS SCHEDULE

A. In addition to basic requirements outlined in General Conditions, show a detailed schedule, beginning with Notice to Proceed, for minimum duration of 120 days, and a summary of balance of Project through Final Completion.

B. Show activities including, but not limited to the following:

1. Notice to Proceed.
2. Permits.
3. Submittals, with review time.
4. Early procurement activities for long lead equipment and materials.
5. Initial site work.
6. Earthwork.
7. Specified Work sequences and construction constraints.
8. Contract Milestone and Completion Dates.
9. Owner-furnished products delivery dates or ranges of dates.
10. Major structural, mechanical, equipment, electrical, architectural, and instrumentation and control Work.
11. System startup summary.
12. Project close-out summary.
13. Demobilization summary.

©COPYRIGHT 2016 CH2M HILL

C. Update Preliminary Progress Schedule monthly; as part of progress payment process. Failure to do so may cause Owner to withhold all or part of the monthly progress payment until the Preliminary Progress Schedule is updated in a manner acceptable to Engineer.

D. Format: In accordance with Article Progress Schedule - Bar Chart.

E. Detailed progress schedule.

F. In addition to requirements of General Conditions, submit Detailed Progress Schedule beginning with Notice to Proceed and continuing through Final Completion.

G. Show the duration and sequences of activities required for complete performance of the Work reflecting means and methods chosen by Contractor.

H. When accepted by Engineer, Detailed Progress Schedule will replace Preliminary Progress Schedule and become Baseline Schedule. Subsequent revisions will be considered as Updated Progress Schedules.

I. Update monthly to reflect actual progress and occurrences to date, including weather delays.

1.03 PROGRESS SCHEDULE - BAR CHART

A. General: Comprehensive bar chart schedule, generally as outlined in Associated General Contractors of America (AGC) Publication No. 1107.1, “Construction Planning and Scheduling, latest edition. If a conflict occurs between the AGC publication and this specification, this specification shall govern.

B. Format:

1. Unless otherwise approved, white paper, 11-inch by 17-inch sheet size.
2. Title Block: Show name of project and Owner, date submitted, revision or update number, and name of scheduler.
3. Identify horizontally, across the top of the schedule, the time frame by year, month, and day.
4. Identify each activity with a unique number and a brief description of the Work associated with that activity.
5. Legend: Describe standard and special symbols used.

C. Contents: Identify, in chronological order, those activities reasonably required to complete the Work, including as applicable, but not limited to:

1. Obtaining permits, submittals for early product procurement and long lead time items.

©COPYRIGHT 2016 CH2M HILL

2. Mobilization and other preliminary activities.
3. Initial site work.
4. Specified Work sequences, constraints, and Milestones, including Substantial Completion date(s) Subcontract Work.
5. Major equipment design, fabrication, factory testing, and delivery dates.
6. Sitework.
7. Concrete Work.
8. Structural steel Work.
9. Architectural features Work.
10. Conveying systems Work.
11. Equipment Work.
12. Mechanical Work.
13. Electrical Work.
14. Instrumentation and control Work.
15. Interfaces with Owner-furnished equipment.
16. Other important Work for each major facility.
17. Equipment and system startup and test activities.
18. Project closeout and cleanup.
19. Demobilization.

1.04 PROGRESS OF THE WORK

A. Updated Progress Schedule shall Reflect:

1. Progress of Work to within 5 working days prior to submission.
2. Approved changes in Work scope and activities modified since submission.
3. Delays in Submittals or resubmittals, deliveries, or Work.
4. Adjusted or modified sequences of Work.
5. Other identifiable changes.
6. Revised projections of progress and completion.
7. Report of changed logic.

B. Produce detailed subschedules during Project, upon request of Owner or Engineer, to further define critical portions of the Work such as facility shutdowns, etc.

C. If Contractor fails to complete activity by its latest scheduled completion date and this failure is anticipated to extend Contract Times (or Milestones), Contractor shall, within 7 days of such failure, submit a written statement as to how Contractor intends to correct nonperformance and return to acceptable current progress schedule. Actions by Contractor to complete Work within Contract Times (or Milestones) will not be justification for adjustment to Contract Price or Contract Times.

©COPYRIGHT 2016 CH2M HILL

D. Owner may order Contractor to increase plant, equipment, labor force or working hours if Contractor fails to:

1. Complete a Milestone activity by its completion date.
2. Satisfactorily execute Work as necessary to prevent delay to overall completion of Project, at no additional cost to Owner.

1.05 NARRATIVE PROGRESS REPORT

A. Format:

1. Organize same as Progress Schedule.
2. Identify, on a cover letter, reporting period, date submitted, and name of author of report.

B. Contents:

1. Number of days worked over the period, work force on hand, construction equipment on hand (including utility vehicles such as pickup trucks, maintenance vehicles, stake trucks, etc.).
2. General progress of Work, including a listing of activities started and completed over the reporting period, mobilization/demobilization of subcontractors, and major milestones achieved.
3. Contractor's plan for management of site (e.g., lay down and staging areas, construction traffic, etc.), utilization of construction equipment, buildup of trade labor, and identification of potential Contract changes.
4. Identification of new activities and sequences as a result of executed Contract changes.
5. Documentation of weather conditions over the reporting period, and any resulting impacts to the work.
6. Description of actual or potential delays, including related causes, and the steps taken or anticipated to mitigate their impact.
7. Changes to activity logic.
8. Changes to the critical path.
9. Identification of, and accompanying reason for, any activities added or deleted since the last report.
10. Steps taken to recover the schedule from Contractor-caused delays.

1.06 SCHEDULE ACCEPTANCE

A. Engineer’s acceptance will demonstrate agreement that the proposed schedule conforms with requirements of Contract including, but not limited to, the following:

1. Contract Times, including Final Completion and all intermediate Milestones are within the specified times.
2. Specified Work sequences and constraints are shown as specified.

©COPYRIGHT 2016 CH2M HILL

3. Complete Scope of Work is included.
4. Specified Owner furnished Equipment or Material arrival dates, or range of dates, are included.
5. Access restrictions are accurately reflected.
6. Start-up and testing times are as specified.
7. Training time is as specified.
8. Level of detail is as specified herein.
9. Submittal submission and review times are as specified.
10. Duration of activities are reasonable.
11. Sequencing is reasonable and does not include preferential logic contrary to the contingency/float sharing clauses of this Specification.
12. Meets all administrative requirements of Contract Documents.
13. Updated schedules reflect actual dates and duration of Work performed.

B. Preliminary Progress Schedule Review Disposition:

1. Accepted.
2. Rejected as Noted:
   a. Make requested corrections; resubmit within 10 days.
   b. Until acceptable to Engineer as the Baseline Progress Schedule, continue the review and revision process, during which time Contractor shall update the schedule on a monthly basis to reflect actual progress and occurrences to date.

C. Detailed Progress Schedule:

1. Accepted.
2. Rejected as Noted:
   a. Make requested corrections; resubmit within 10 days.
   b. Until acceptable to Engineer as the Baseline Progress Schedule, continue the review and revision process.

D. Narrative Report: All changes to activity duration and sequences, including the addition or deletion of activities subsequent to Engineer's acceptance of the Baseline Progress Schedule, shall be delineated in the Narrative Report current with the proposed Updated Progress Schedule.

1.07 ADJUSTMENT OF CONTRACT TIMES

A. Reference General Conditions.

B. Evaluation and reconciliation of Adjustments of Contract Times shall be based on the Updated Progress Schedule at the time of proposed adjustment or claimed delay.

©COPYRIGHT 2016 CH2M HILL

C. Schedule Contingency:

1. Contingency, when used in the context of the Progress Schedule, is time between Contractor’s proposed Completion Time and Contract Completion Time.
2. Contingency included in Progress Schedule is a Project resource available to both Contractor and Owner to meet Contract Milestones and Contract Times. Use of Schedule contingency shall be shared to the proportionate benefit of both parties.
3. Use of schedule contingency suppression techniques such as preferential sequencing and extended activity times are prohibited.
4. Pursuant to Contingency sharing provisions of this Specification, no time extensions will be granted, nor will delay damages be paid until a delay occurs which (i) consumes all available contingency time, and (ii) extends Work beyond the Contract Completion date.

D. Claims Based on Contract Times:

1. Where Engineer has not yet rendered formal decision on Contractor's claim for adjustment of Contract Times, and parties are unable to agree as to amount of adjustment to be reflected in progress schedule, Contractor shall reflect an interim adjustment in the progress schedule as acceptable to Engineer.
2. It is understood and agreed that such interim acceptance will not be binding on either Contractor or Owner, and will be made only for the purpose of continuing to schedule Work until such time as formal decision has been rendered as to an adjustment, if any, of the Contract Times.
3. Contractor shall revise progress schedule prepared thereafter in accordance with Engineer's formal decision.

PART 2 PRODUCTS (NOT USED)

PART 3 EXECUTION (NOT USED)

END OF SECTION

©COPYRIGHT 2016 CH2M HILL

SECTION 01 33 00
SUBMITTALS

PART 1 GENERAL

1.01 GENERAL

A. Inquiries: Direct to Engineer regarding procedure, purpose, or extent of Submittal.

B. Timeliness: Schedule and make submissions in accordance with requirements of individual Specification sections and in such sequence as to cause no delay in Work or in work of other contractors.

C. Identification of Submittals:

1. Complete, sign, and transmit with each Submittal package, one Transmittal of Contractor's Submittal Form attached at end of this Section.
2. Identify each Submittal with the following numbering and tracking system:
   a. Sequentially number each Submittal.
   b. Resubmission of a Submittal will have original number with sequential alphabetic suffix.
3. Format: Orderly, indexed with labeled tab dividers.
4. Show date of submission.
5. Show Project title and Owner's contract identification and contract number.
6. Show names of Contractor, Subcontractor or Supplier, and manufacturer as appropriate.
7. Identify, as applicable, Contract Document section and paragraph to which Submittal applies.
8. Identify Submittal type; submit only one type in each Submittal package.
9. Identify and indicate each deviation or variation from Contract Documents.

D. Resubmissions: Clearly identify each correction or change made.

E. Incomplete Submittal Submissions:

1. Engineer will return entire Submittal for Contractor's revision/correction and resubmission.
2. Submittals which do not clearly bear Contractor's specific written indication of Contractor review and approval of Submittal or which are

©COPYRIGHT 2016 CH2M HILL

transmitted with an unsigned or uncertified submission form or as may otherwise be required will be returned to Contractor unreviewed.

F. Nonspecified Submissions: Submissions not required under these Contract Documents and not shown on submissions will not be reviewed and will be returned to Contractor.

G. Engineer's Review: Engineer will act upon Contractor's Submittal and transmit response to Contractor not later than 20 working days after receipt, unless otherwise specified. Resubmittals will be subject to same review time.

H. Schedule Delays:

1. No adjustment of Contract Times or Price will be allowed due to Engineer's review of Submittals, unless all of the following criteria are met:
   a. Contractor has notified Engineer in writing that timely review of Submittal in question is critical to progress of Work, and has received Engineer's written acceptance to reflect such on current accepted submissions and progress schedule. Written agreement by the Engineer to reduce Submittal review time will be made only for unusual and Contractor-justified reasons. Acceptance of a progress schedule containing Submittal review times less than specified or less than agreed to in writing by Engineer will not constitute Engineer's acceptance of review times.
   b. Engineer has failed to review and return first submission of a Submittal within agreed time indicated on current accepted schedule of submissions or, if no time is indicated thereon, within 30 days after receipt.
   c. Contractor demonstrates that delay in progress of Work is directly attributable to Engineer's failure to return Submittal within time indicated and accepted by Engineer.
2. No adjustment of Contract Times or Price will be allowed due to delays in progress of Work caused by rejection and subsequent resubmission of Submittals, including multiple resubmissions.

1.02 SHOP DRAWINGS AND SAMPLES

A. Copies:

1. Shop Drawings and Product Data: Submit four copies, plus whatever the Contractor requires to be returned, maximum eight.
2. Samples: Two, unless otherwise specified in individual Specification sections.

B. General: Submit to Engineer as required by individual Specification sections.

©COPYRIGHT 2016 CH2M HILL

C. Identify and Indicate:

1. Pertinent Drawing sheet(s) and detail number(s), products, units and assemblies, and system or equipment identification or tag numbers.
2. Critical field dimensions and relationships to other critical features of Work.
3. Samples: Source, location, date taken, and by whom.
4. Each deviation or variation from Contract Documents.
5. Proper storage and maintenance requirements.

D. Design Data: When specified, provide Project-specific information as required and as necessary to clearly show calculations, dimensions, logic and assumptions, and referenced standards and codes upon which design is based.

E. Foreign Manufacturers: When proposed, include following additional information:

1. Names and addresses of at least two companies closest to Project that maintain technical service representatives.
2. Complete inventory of spare parts and accessories for each piece of equipment.

F. Preparation:

1. Format: Whenever possible, schedule for and combine Shop Drawings and Samples required for submission in each Specification section or division into a single Submittal package. Also combine product data for like items into a single Submittal package.
2. Present in a clear and thorough manner and of sufficient detail to show kind, size, arrangement, and function of components, materials, and devices and compliance with Contract Documents. Identify details by reference to sheet and detail, and schedule or room numbers shown on Drawings.
3. Reproducible Copy:
   a. Preferred Minimum Sheet Size: 8-1/2- by 11-inch and 11- by 17-inch pages, suitable for photocopying.
   b. Larger than 11- by 17-Inch Sheets: 22-inch by 34-inch preferred, mylar or sepias suitable for copying in a blueprint machine.
4. Piping Systems: Drawn to scale.
5. Product Data: Clearly mark each copy to identify pertinent products or models and show performance characteristics and capacities, dimensions and clearances required, wiring or piping diagrams and controls, and external connections, anchorage, and supports required.

©COPYRIGHT 2016 CH2M HILL

6. Equipment and Component Titles: Identical to title shown on Drawings.
7. Manufacturer's Standard Schematic Drawings and Diagrams as Follows:
    a. Modify to delete information that is not applicable to Work.
    b. Supplement standard information to provide information specifically applicable to Work.

G. Shop Drawing Disposition: Engineer will review, mark, and stamp as appropriate and distribute marked-up copies as noted:

1. Conforms w/Concept (for Incorporation in Work):
    a. Two copies furnished Owner.
    b. One copy furnished Resident Project Representative.
    c. One copy retained in Engineer's file.
    d. Remaining copies returned to Contractor appropriately annotated.
    e. Contractor may begin to implement activities to incorporate specific product(s) or Work covered by Submittal.
2. Conforms w/Concept – Except As Noted (for Incorporation in Work):
    a. Two copies furnished Owner.
    b. One copy furnished Resident Project Representative.
    c. One copy retained in Engineer's file.
    d. Remaining copies returned to Contractor appropriately annotated.
    e. Contractor may begin to implement activities to incorporate product(s) or Work covered by Submittal, in accordance with Engineer's notations.
3. Not Accepted:
    a. One copy furnished Resident Project Representative.
    b. One copy retained in Engineer's file.
    c. Remaining copies returned to Contractor appropriately annotated.
    d. Contractor shall make corrections or develop replacement and resubmit (in same manner and quantity as specified for original submission).
    e. Submittal is not approved.
4. Revise and Resubmit:
    a. One copy furnished Resident Project Representative.
    b. One copy retained in Engineer's file.
    c. Remaining copies returned to Contractor appropriately annotated.
    d. Contractor shall complete and resubmit or submit missing portions.
    e. Submittal is not approved.

H. Sample Disposition: Same as Shop Drawing disposition; samples will not be returned.

©COPYRIGHT 2016 CH2M HILL

1.03 ADMINISTRATIVE SUBMITTALS

A. Copies: Submit four.

B. Description: Submittals that are not Shop Drawings or Samples, or that do not reflect quality of product or method of construction. May include, but not limited to those Submittals identified below.

C. Applications for Payment (and Cash Allowance Data and Values): Meet requirements of Section 01 29 00, Payment Procedures.

D. Progress Reports and Quantity Charts: As may be required in Section 01 32 00, Progress Schedules.

E. Hurricane Evaluation Plan: The Contractor shall prepare the Engineer with a written plan and schedule describing how and when the Contractor will remove all unnecessary items from the work area and tie down all remaining supplies and barricades in the event that a hurricane warning is issued, identifying gussets in particular. If a warning is issued, the Contractor shall remove all unnecessary items from the work area(s) and will tie down all movable (under 200 pounds) objects. The Owner shall not be liable for any financial hardship or delays caused as a result of demobilization or remobilization due to the above.

F. Schedules:

1. Progress Schedule(s): Meet the requirements of Section 01 32 00, Progress Schedules.
2. Schedule of Values: Meet requirements of Section 01 29 00, Payment Procedures.
3. Schedule of Submittal Submissions:
   a. Prepare and submit, preliminary list of submissions grouped by Contract Document article/paragraph number or Specification section number, with identification, numbering and tracking system as specified under Paragraph Identification of Submittals and as approved by Engineer.
   b. Include Only the Following Required Submissions:
      1) Shop Drawings and Samples.
      2) Training plans.
      3) Test procedures.
      4) Operation and maintenance manuals.
      5) Record documents.
      6) Specifically required certificates, warranties, and service agreements.

©COPYRIGHT 2016 CH2M HILL

c. Coordinate with progress schedule and prepare submissions to show for each Submittal, at a minimum, the following:
   1) Estimated submission date to Engineer.
   2) Specifically requested and clearly identified Engineer review time if shorter than that set forth herein, with justification for such request and critical dates Submittals will be needed from Engineer.
   3) For first 6-month period from the date the Contract Times commence or following any update or adjustment of the submissions, the estimated submission date shall be week, month, and year; for submissions beyond 6-month time period, show closest month and year.
d. Submit to Engineer Monthly:
   1) Updated list if changes have occurred. Otherwise, submit a written communication confirming existing list.
   2) Adjusted submissions reflecting submission activity planned for forthcoming 6-month time period and beyond. Coordinate with progress schedule updates.

G. Submittals Required by Laws, Regulations, and Governing Agencies:

1. Submit promptly notifications, reports, certifications, payrolls, and otherwise as may be required, directly to the applicable federal, state, or local governing agency or their representative.
2. Transmit to Engineer for Owner's records one copy of correspondence and transmittals (to include enclosures and attachments) between Contractor and governing agency.

H. Disposition: Engineer will review, stamp, and indicate requirements for resubmission or acceptance on Submittal as follows:

1. Accepted:
   a. Acceptance will indicate that Submittal conforms to intent of Contract Documents as to form and substance.
   b. Contractor may proceed to perform Submittal related Work.
   c. One copy furnished Owner.
   d. One copy furnished Resident Project Representative.
   e. One copy retained in Engineer's file.
   f. Remaining copies returned to Contractor appropriately annotated.
2. Rejected as Noted:
   a. One copy retained in Engineer's file.
   b. Remaining copies returned to Contractor appropriately annotated.
   c. Contractor shall revise/correct or develop replacement and resubmit.

©COPYRIGHT 2016 CH2M HILL

1.04 QUALITY CONTROL SUBMITTALS

A. Certificates: Certificates of Successful Testing or Inspection: Submit when testing or inspection is required by Laws and Regulations or governing agency or specified in the individual Specification sections.

B. Statements of Qualification: Evidence of qualification, certification, or registration. As required in these Contract Documents to verify qualifications of professional land surveyors, engineers, materials testing laboratories, specialty Subcontractors, trades, specialists, consultants, installers, and other professionals. Reference paragraph 1.01.A.51 of Supplementary Conditions for the definition of Specialist.

C. Field Samples: Provide as required by individual Specifications and as may be required by Engineer during progress of Work.

D. Written Test Reports of Each Test and Inspection: As a minimum, include the following:

1. Date of test and date issued, Project title and number, testing laboratory name, address, and telephone number, and name and signature of laboratory inspector.
2. Date and time of sampling or inspection and record of temperature and weather conditions.
3. Identification of product and Specification section, location of Sample, test or inspection in the Project, type of inspection or test with referenced standard or code, certified results of test.
4. Compliance with Contract Documents, and identifying corrective action necessary to bring materials and equipment into compliance.
5. Provide an interpretation of test results, when requested by Engineer.

E. Disposition: Engineer will review, stamp, and indicate requirements for resubmission or acceptance on Submittal as follows:

1. Accepted:
   a. Acceptance will indicate that Submittal conforms to intent of Contract Documents as to form and substance.
   b. Contractor may proceed to perform Submittal related Work.
   c. One copy furnished Owner.
   d. One copy furnished Resident Project Representative.
   e. One copy retained in Engineer's file.
   f. Remaining copies returned to Contractor appropriately annotated.

©COPYRIGHT 2016 CH2M HILL

2. Rejected as Noted:
   a. One copy retained in Engineer's file.
   b. Remaining copies returned to Contractor appropriately annotated.
   c. Contractor shall revise/correct or develop replacement and resubmit.

1.05 CONTRACT CLOSEOUT SUBMITTALS

A. General: In accordance with Section 01 77 00, Contract Closeout.

B. Disposition: Engineer will review, stamp, and indicate requirements for resubmission or acceptance on Submittal as follows:

1. Accepted:
   a. Acceptance will indicate that Submittal conforms to intent of Contract Documents as to form and substance.
   b. Contractor may proceed to perform Submittal related Work.
   c. One copy furnished Owner.
   d. One copy furnished Resident Project Representative.
   e. One copy retained in Engineer's file.
   f. Remaining copies returned to Contractor appropriately annotated.
2. Rejected as Noted:
   a. One copy retained in Engineer's file.
   b. Remaining copies returned to Contractor appropriately annotated.
   c. Contractor shall revise/correct or develop replacement and resubmit.

1.06 SUPPLEMENTS

A. The supplement listed below, following “END OF SECTION,” is part of this Specification.

1. Transmittal of Contractor's Submittal.

PART 2 PRODUCTS (NOT USED)

PART 3 EXECUTION (NOT USED)

END OF SECTION

©COPYRIGHT 2016 CH2M HILL

439197/WPB

CH2M HILL

TRANSMITTAL OF CONTRACTOR'S SUBMITTAL
(ATTACH TO EACH SUBMITTAL)

DATE:_____

TO:_____

_____

_____

_____

_____

FROM:_____

Contractor

_____

_____

_____

Submittal No.:_____

☐ New Submittal ☐Resubmittal

Previous Submittal No.:_____

Project:_____

Project No.:_____

Specification Section No.:_____

(Cover only one section with each transmittal)

Schedule Date of Submittal:

_____

SUBMITTAL TYPE: ☐ Shop Drawing ☐ Administrative ☐ Sample ☐ Quality Control ☐ Contract Closeout ☐ "Or Equal"/Substitute

The following items are hereby submitted:

Number of Copies	Description of Item Submitted (Type, Size, Model Number, Etc.)	Spec. Para. No.	Drawing or Brochure Number	Contains Variation to Contract	
				No	Yes

Contractor hereby certifies that (i) Contractor has complied with the requirements of Contract Documents in preparation, review, and submission of designated Submittal and (ii) the Submittal is complete and in accordance with the Contract Documents and requirements of laws and regulations and governing agencies.

By:_____

Contractor (Authorized Signature)

©COPYRIGHT 2016 CH2M HILL

SECTION 01 42 13
ABBREVIATIONS

PART 1 GENERAL

1.01 REFERENCE TO STANDARDS AND SPECIFICATIONS OF TECHNICAL SOCIETIES

A. Reference to standards and specifications of technical societies and reporting and resolving discrepancies associated therewith shall be as provided in paragraph 3.02 of the General Conditions, and as may otherwise be required herein and in the individual Specification sections.

B. Work specified by reference to the published standard or specification of a government agency, technical association, trade association, professional society or institute, testing agency, or other organization shall meet the requirements or surpass the minimum standards of quality for materials and workmanship established by the designated standard or specification.

C. Where so specified, products or workmanship shall also meet or exceed the additional prescriptive or performance requirements included within the Contract Documents to establish a higher or more stringent standard of quality than that required by the referenced standard.

D. Where two or more standards are specified to establish quality, the product and workmanship shall meet or exceed the requirements of the most stringent.

E. Where both a standard and a brand name are specified for a product in the Contract Documents, the proprietary product named shall meet or exceed the requirements of the specified reference standard.

F. Copies of Standards and Specifications of Technical Societies:

1. Copies of applicable referenced standards have not been bound in these Contract Documents.
2. Where copies of standards are needed by the Contractor, obtain a copy or copies directly from the publication source and maintain in an orderly manner at the site as Work site records, available to the Contractor's personnel, Subcontractors, Owner, and Engineer.

©COPYRIGHT 2016 CH2M HILL

1.02 ABBREVIATIONS

A. Abbreviations for trade organizations and government agencies: Following is a list of construction industry organizations and government agencies to which references may be made in the Contract Documents, with abbreviations used.

1.	AA	Aluminum Association
2.	AABC	Associated Air Balance Council
3.	AAMA	American Architectural Manufacturers Association
4.	AASHTO	American Association of State Highway and Transportation Officials
5.	ACI	American Concrete Institute
6.	AFBMA	Anti-Friction Bearing Manufacturers' Association
7.	AGA	American Gas Association
8.	AGMA	American Gear Manufacturers' Association
9.	AI	Asphalt Institute
10.	AISC	American Institute of Steel Construction
11.	AISI	American Iron and Steel Institute
12.	AITC	American Institute of Timber Construction
13.	ALS	American Lumber Standards
14.	AMA	Acoustical Materials Association
15.	AMCA	Air Movement and Control Association
16.	ANSI	American National Standards Institute
17.	APA	American Plywood Association
18.	API	American Petroleum Institute
19.	APWA	American Public Works Association
20.	AREA	American Railway Engineering Association
21.	ARI	Air Conditioning and Refrigeration Institute
22.	ASA	American Standards Association
23.	ASAE	American Society of Agricultural Engineers
24.	ASCE	American Society of Civil Engineers
25.	ASHRAE	American Society of Heating, Refrigerating and Air-Conditioning Engineers, Inc.
26.	ASNT	American Society for Nondestructive Testing
27.	ASME	American Society of Mechanical Engineers
28.	ASTM	American Society for Testing and Materials
29.	AWI	Architectural Wood Work Institute
30.	AWPA	American Wood Preservers' Association
31.	AWPB	American Wood Preservers Bureau
32.	AWPI	American Wood Preservers' Institute
33.	AWS	American Welding Society
34.	AWWA	American Water Works Association
35.	BHMA	Builders Hardware Manufacturers' Association

©COPYRIGHT 2016 CH2M HILL

36. CBMA Certified Ballast Manufacturers' Association
37. CDA Copper Development Association
38. CGA Compressed Gas Association
39. CIPRI Cast Iron Pipe Research Institute
40. CISPI Cast Iron Soil Pipe Institute
41. CMAA Crane Manufacturers' Association of America
42. CRSI Concrete Reinforcing Steel Institute
43. CS Commercial Standard
44. CSA Canadian Standards Association
45. CSI Construction Specifications Institute
46. CTSS Caltrans Standard Specification
47. EJCDC Engineers Joint Contract Documents' Committee
48. ETL Engineering Test Laboratories
49. FCC Federal Communications Commission
50. FAA Federal Aviation Administration
51. FEMA Federal Emergency Management Agency
52. FGMA Flat Glass Marketing Association
53. FM Factory Mutual
54. Fed. Spec. Federal Specifications
55. FS Federal Specification
56. GA Gypsum Association
57. HI Hydraulic Institute
58. HMI Hoist Manufacturers' Institute
59. ICBO International Conference of Building Officials
60. ICEA Insulated Cable Engineers' Association
61. IEEE Institute of Electrical and Electronics Engineers, Inc.
62. IES Illuminating Engineering Society
63. IFI Industrial Fasteners Institute
64. ISA Instrument Society of America
65. ISO Insurance Service Office
66. JIC Joint Industry Conferences of Hydraulic Manufacturers
67. MIA Marble Institute of America
68. Mil. Sp. Military Specification or MIL
69. MS Military Specifications
70. MMA Monorail Manufacturers' Association
71. NAAMM National Association of Architectural Metal Manufacturers
72. NACE National Association of Corrosion Engineers
73. NBHA National Builders' Hardware Association
74. NEBB National Environmental Balancing Bureau
75. NEC National Electrical Code
76. NECA National Electrical Contractor's Association
77. NEMA National Electrical Manufacturers' Association

©COPYRIGHT 2016 CH2M HILL

78.	NESC	National Electric Safety Code
79.	NFPA	National Fire Protection Association
80.	NHLA	National Hardwood Lumber Association
81.	NHPMA	Northern Hardwood and Pine Manufacturer's Association
82.	NLMA	National Lumber Manufacturers' Association
83.	NRCA	National Roofing Contractors Association
84.	NSF	National Sanitation Foundation Testing Laboratory
85.	NSPE	National Society of Professional Engineers
86.	NTMA	National Terrazzo and Mosaic Association
87.	NWWDA	National Wood Window and Door Association
88.	OECI	Overhead Electrical Crane Institute
89.	OSHA	Occupational Safety and Health Act (both Federal and State)
90.	PCI	Prestressed Concrete Institute
91.	PEI	Porcelain Enamel Institute
92.	PPI	Plastic Pipe Institute
93.	PS	Product Standards Section-U.S. Department of Commerce
94.	RMA	Rubber Manufacturers' Association
95.	SAE	Society of Automotive Engineers
96.	SCPRF	Structural Clay Products Research Foundation
97.	SDI	Steel Deck Institute
98.	SDI	Steel Door Institute
99.	SIGMA	Sealed Insulating Glass Manufacturing Association
100.	SJI	Steel Joist Institute
101.	SMACNA	Sheet Metal and Air Conditioning Contractors National Association
102.	SPI	Society of the Plastics Industry
103.	SSPC	Steel Structures Painting Council
104.	SWI	Steel Window Institute
105.	TEMA	Tubular Exchanger Manufacturers' Association
106.	TCA	Tile Council of America
107.	UBC	Uniform Building Code
108.	UFC	Uniform Fire Code
109.	UL	Underwriters Laboratories Inc.
110.	UMC	Uniform Mechanical Code
111.	US	U.S. Bureau of Standards
112.	USBR	U.S. Bureau of Reclamation
113.	WCLIB	West Coast Lumber Inspection Bureau
114.	WWPA	Western Wood Products Association

PART 2 PRODUCTS (NOT USED)

PART 3 EXECUTION (NOT USED)

END OF SECTION

©COPYRIGHT 2016 CH2M HILL

SECTION 01 50 00
CONSTRUCTION FACILITIES AND TEMPORARY CONTROLS

PART 1 GENERAL

1.01 REFERENCES

A. The following is a list of standards which may be referenced in this Section:

1. American Association of Nurserymen: American Standards for Nursery Stock.
2. U.S. Weather Bureau, “Rainfall-Frequency Atlas of the U.S. for Durations From 30 Minutes to 24 Hours and Return Periods From 1 to 100 Years.”
3. U.S. Department of Agriculture, “Urban Hydrology for Small Watersheds.”
4. Federal Emergency Management Agency.
5. NFPA, National Fire Prevention Standard for Safeguarding Building Construction Operations.

1.02 SUBMITTALS

A. Administrative Submittals: Copies of permits and approvals for construction as required by Laws and Regulations and governing agencies.

B. Shop Drawings:

1. Temporary Utility Submittals:
   a. Electric power supply and distribution plans.
   b. Drainage plans.
2. Temporary Construction Submittals:
   a. Parking area plans.
   b. Contractor’s field office, storage yard, and storage building plans, including gravel surfaced area.
   c. Fencing and protective barrier locations and details.
   d. Staging area location plan.
   e. Traffic Control and Routing Plans: As specified herein, and proposed revisions thereto.
   f. Plan for maintenance of existing plant operations.
3. Temporary Control Submittals: Noise control plan.

©COPYRIGHT 2016 CH2M HILL

1.03 MOBILIZATION

A. Mobilization shall Include, but Not be Limited to, these Principal Items:

1. Obtaining required permits.
2. Installing temporary construction power, wiring, and lighting facilities.
3. Providing onsite communication facilities, including telephones.
4. Providing onsite sanitary facilities and potable water facilities as specified and as required by Laws and Regulations, and governing agencies.
5. Arranging for and erection of Contractor's work and storage yard.
6. Posting OSHA required notices and establishing safety programs and procedures.
7. Having Contractor's superintendent at site full time.

B. Areas designated for Contractor's temporary facilities shall be coordinated with Engineer and City.

PART 2 PRODUCTS

PART 3 EXECUTION

3.01 TEMPORARY UTILITIES

A. Fire Protection: Furnish and maintain on site adequate firefighting equipment capable of extinguishing incipient fires. Comply with applicable parts of the National Fire Prevention Standard for Safeguarding Building Construction Operations (NFPA No. 241).

B. Cooling and Ventilating:

1. Provide as required to maintain adequate environmental conditions to facilitate progress of the Work, to meet specified minimum conditions for the installation of materials, and to protect materials, equipment, and finishes from damage due to temperature or humidity.
2. Provide adequate forced air ventilation of enclosed areas to cure installed materials, to dispense humidity, and to prevent hazardous accumulations of dust, fumes, vapors, or gases.
3. Pay all costs of installation, maintenance, operation, removal, and fuel consumed.

3.02 TEMPORARY ELECTRIC POWER

A. The Contractor shall make arrangements to obtain and pay for electrical power used until final acceptance by the Owner.

©COPYRIGHT 2016 CH2M HILL

3.03 SAFETY REQUIREMENTS FOR TEMPORARY ELECTRIC POWER

A. Temporary electric power installation shall meet the construction safety requirements of OSHA, state and other governing agencies.

3.04 TEMPORARY WATER

A. The Contractor shall make his own arrangements to obtain suitable water and shall pay all costs.

3.05 SANITARY FACILITIES

A. The Contractor shall provide and maintain sanitary facilities for his employees and his subcontractors that will comply with the regulations of the local and state departments of health and as directed by the Engineer.

3.06 PROTECTION OF WORK AND PROPERTY

A. General:

1. Perform Work within right-of-way and easements in a systematic manner that minimizes inconvenience to property owners and the public.
2. Maintain in continuous service all existing oil and gas pipelines, underground power, telephone or communication cable, water mains, irrigation lines, sewers, poles and overhead power, and all other utilities encountered along the line of work, unless other arrangements satisfactory to owners of said utilities have been made.
3. Where completion of Work requires temporary or permanent removal and/or relocation of an existing utility, coordinate all activities with owner of said utility and perform all work to their satisfaction.
4. Protect, shore, brace, support, and maintain underground pipes, conduits, drains, and other underground utility construction uncovered or otherwise affected by construction operations.
5. Keep fire hydrants and water control valves free from obstruction and available for use at all times.
6. In areas where Contractor's operations are adjacent to or near a utility such as gas, telephone, television, electric power, water, sewer, or irrigation system and such operations may cause damage or inconvenience, suspend operations until arrangements necessary for protection thereof have been made by Contractor.
7. Notify property owners and utility offices that may be affected by construction operation at least 2 days in advance.
   a. Before exposing a utility, obtain utility owner's permission. Should service of utility be interrupted due to the Contractor's operation, notify proper authority immediately. Cooperate with said authority in restoring service as promptly as possible and bear costs incurred.

©COPYRIGHT 2016 CH2M HILL

8. Do not impair operation of existing sewer systems. Prevent construction material, pavement, concrete, earth, volatile and corrosive wastes, and other debris from entering sewers, pump stations, or other sewer structures.
9. Maintain original site drainage wherever possible.

B. Site Security: Reference the General Conditions.

C. Barricades and Lights:

1. Provide as necessary to prevent unauthorized entry to construction areas and affected roads, streets, and alleyways, inside and outside of fenced area, and as required to ensure public safety and the safety of Contractor's employees, other employer's employees, and others who may be affected by the Work.
2. Provide to protect existing facilities and adjacent properties from potential damage.
3. Locate to enable access by facility operators and property owners.
4. Protect streets, roads, highways, and other public thoroughfares that are closed to traffic by effective barricades with acceptable warning signs.
5. Locate barricades at the nearest intersecting public thoroughfare on each side of the blocked section.

D. Existing Structures: Where Contractor contemplates removal of small structures such as mailboxes, signposts, and culverts that interfere with Contractor's operations, obtain approval of property owner and Engineer. Replace those removed in a condition equal to or better than original.

E. Waterways: Keep ditches, culverts, and natural drainages continuously free of construction materials and debris.

3.07 TEMPORARY CONTROLS

A. Air Pollution Control:

1. Minimize air pollution from construction operations.
2. Burning of waste materials, rubbish, or other debris will not be permitted on or adjacent to Site.
3. Conduct operations of dumping rock and of carrying rock away in trucks to cause a minimum of dust. Give unpaved streets, roads, detours, or haul roads used in the construction area a dust-preventive treatment or periodically water to prevent dust. Strictly adhere to applicable environmental regulations for dust prevention.
4. Provide and maintain temporary dust-tight partitions, bulkheads, or other protective devices during construction to permit normal operation of existing facilities. Construct partitions of plywood, insulating board,

©COPYRIGHT 2016 CH2M HILL

plastic sheets, or similar material. Construct partitions in such a manner that dust and dirt from demolition and cutting will not enter other parts of existing building or facilities. Remove temporary partitions as soon as the need no longer exists.

B. Noise Control:

1. Provide acoustical barriers so noise emanating from tools or equipment will not exceed legal noise levels.
2. Noise Control Ordinance: City of Key West.
3. Noise Control Plans: Proposed plan to mitigate construction noise impacts and to comply with noise control ordinances including method of construction, equipment to be used, and acoustical treatments.

C. Water Pollution Control:

1. Divert sanitary sewage and nonstorm waste flow interfering with construction and requiring diversion to sanitary sewers. Do not cause or permit action to occur which would cause an overflow to an existing waterway.
2. Prior to commencing excavation and construction, obtain Owner's agreement with detailed plans showing procedures intended to handle and dispose of sewage, groundwater, and stormwater flow, including dewatering pump discharges.
3. Comply with procedures outlined in U.S. Environmental Protection Agency manuals entitled, “Guidelines for Erosion and Sedimentation Control Planning” and “Implementation, Processes, Procedures, and Methods to Control Pollution Resulting from All Construction Activity,” and “Erosion and Sediment Control-Surface Mining in Eastern United States.”
4. Do not dispose of volatile wastes such as mineral spirits, oil, chemicals, or paint thinner in storm or sanitary drains. Disposal of wastes into streams or waterways is prohibited. Provide acceptable containers for collection and disposal of waste materials, debris, and rubbish.

D. Erosion, Sediment, and Flood Control: Provide, maintain, and operate temporary facilities to control erosion and sediment releases, and to protect Work and existing facilities from flooding during construction period.

©COPYRIGHT 2016 CH2M HILL

3.08 ROADS

A. Maintain access to all roads. Do not block any roadways during construction. If road blockage is anticipated, Contractor shall receive approval from City prior to starting construction.

B. Maintain drainage ways. Install and maintain culverts to allow water to flow. Provide corrosion-resistant culvert pipe of adequate strength to resist construction loads.

C. Provide gravel, crushed rock, or other stabilization material to permit access by all motor vehicles at all times.

D. Maintain road grade and crown to eliminate potholes, rutting, and other irregularities that restrict access.

3.09 PARKING AREAS

A. Parking cars on individual work sites shall be kept to a minimum. A parking plan shall be required for the Site.

B. Control Vehicular parking to preclude interference with public traffic or parking, access by emergency vehicles, Owner's operations, or construction operations. No parking along roadways shall be allowed.

3.10 CLEANING DURING CONSTRUCTION

A. In accordance with General Conditions, as may be specified in Specification sections, and as required herein.

B. Wet down exterior surfaces prior to sweeping to prevent blowing of dust and debris. At least weekly, sweep all floors (basins, tunnels, platforms, walkways, roof surfaces), and pick up all debris and dispose.

C. Provide approved containers for collection and disposal of waste materials, debris, and rubbish. At least at weekly intervals, dispose of such waste materials, debris, and rubbish offsite.

D. At least weekly, brush sweep all streets and walkways affected by Work and where adjacent to Work.

END OF SECTION

©COPYRIGHT 2016 CH2M HILL

SECTION 01 77 00
CONTRACT CLOSEOUT

PART 1 GENERAL

1.01 SUBMITTALS

A. Quality Control Submittals: Written procedures for maintaining and markup of record documents.

B. Contract Closeout Submittals: Submit prior to application for final payment.

1. Record Documents: As required in the General Conditions.
2. Approved Shop Drawings and Samples: As required in the General Conditions.
3. Consent of Surety to Final Payment: As required in the General Conditions.
4. Releases or Waivers of Liens and Claims: As required in the General Conditions.
5. Releases from Agreements.
6. Final Application for Payment: Submit in accordance with procedures and requirements stated in Section 01 29 00, Payment Procedures.
7. Spare Parts and Special Tools: As required by individual Specification sections.

1.02 RECORD DOCUMENTS

A. Quality Assurance:

1. Furnish qualified and experienced person, whose duty and responsibility shall be to maintain record documents.
2. Accuracy of Records:
   a. Coordinate changes within record documents, making legible and accurate entries on each sheet of Drawings and other documents where such entry is required to show change.
   b. Purpose of Project record documents is to document factual information regarding aspects of Work, both concealed and visible, to enable future modification of Work to proceed without lengthy and expensive site measurement, investigation, and examination.
3. Make entries within 24 hours after receipt of information that a change in Work has occurred.

©COPYRIGHT 2016 CH2M HILL

4. Prior to submitting each request for progress payment, request Engineer's review and approval of current status of record documents. Failure to properly maintain, update, and submit record documents may result in a deferral by Engineer to recommend the whole or any part of the Contractor's Application for Payment, either partial or final.
5. Contractor to have a licensed surveyor provide signed and sealed drawing that include the following as an attachment to the Project Record Drawings.
    a. All pipe inverts elevations, bottom of structures elevation, pipe grade, LF of new pipe installed;
    b. All rim elevations. All grate elevations.
    c. Locations of Catch basins, Well structures, and Manholes.
    d. Limits of construction.
    e. Replace existing property pins removed for construction.
    f. Submit record drawings (four) signed and sealed. Provide to the city three DISCS with electronic copies in AUTOCAD and PDF.

1.03 RELEASES FROM AGREEMENTS

A. Furnish Owner written releases from property owners or public agencies where side agreements or special easements have been made, or where Contractor's operations have not been kept within the Owner's construction right-of-way.

B. In the event Contractor is unable to secure written releases, inform the Owner of the reasons:

1. Owner or its representatives will examine the site, and Owner will direct Contractor to complete Work that may be necessary to satisfy terms of the easement.
2. Should Contractor refuse to perform this Work, Owner reserves the right to have it done by separate contract and deduct the cost of same from the Contract Price, or require the Contractor to furnish a satisfactory Bond in a sum to cover legal claims for damages.
3. When Owner is satisfied that Work has been completed in agreement with the Contract Documents and terms of easements, the right is reserved to waive the requirement for written release if: (i) Contractor's failure to obtain such statement is due to the grantor's refusal to sign, and this refusal is not based upon any legitimate claims that Contractor has failed to fulfill the terms of the easement, or (ii) Contractor is unable to contact or has had undue hardship in contacting the grantor.

©COPYRIGHT 2016 CH2M HILL

PART 2 PRODUCTS (NOT USED)

PART 3 EXECUTION

3.01 MAINTENANCE OF RECORD DOCUMENTS

A. General:

1. Promptly following commencement of Contract Times, secure from Engineer at no cost to Contractor, one complete set of Contract Documents. Drawings will be full size.
2. Delete Engineer title block and seal from all documents.
3. Label or stamp each record document with title, “RECORD DOCUMENTS,” in neat large printed letters.
4. Record information concurrently with construction progress and within 24 hours after receipt of information that change has occurred. Do not cover or conceal Work until required information is recorded.

B. Preservation:

1. Maintain documents in a clean, dry, legible condition and in good order. Do not use record documents for construction purposes.
2. Make documents and Samples available at all times for observation by Engineer.

C. Making Entries on Drawings:

1. Using an erasable colored pencil (not ink or indelible pencil), clearly describe change by graphic line and note as required.
   a. Color Coding:
      1) Green when showing information deleted from Drawings.
      2) Red when showing information added to Drawings.
      3) Blue and circled in blue to show notes.
2. Date entries.
3. Call attention to entry by “cloud” drawn around area or areas affected.
4. Legibly mark to record actual changes made during construction, including, but not limited to:
   a. Depths of various elements of foundation in relation to finished first floor data if not shown or where depth differs from that shown.
   b. Horizontal and vertical locations of existing and new Underground Facilities and appurtenances, and other underground structures, equipment, or Work. Reference to at least two measurements to permanent surface improvements.

©COPYRIGHT 2016 CH2M HILL

c. Location of internal utilities and appurtenances concealed in the construction referenced to visible and accessible features of the structure.
d. Locate existing facilities, piping, equipment, and items critical to the interface between existing physical conditions or construction and new construction.
e. Changes made by Addenda and Field Orders, Work Change Directive, Change Order, Written Amendment, and Engineer's written interpretation and clarification using consistent symbols for each and showing appropriate document tracking number.

5. Dimensions on Schematic Layouts: Show on record drawings, by dimension, the centerline of each run of items such as are described in previous subparagraph above.
   a. Clearly identify the item by accurate note such as “cast iron drain,” “galv. water,” and the like.
   b. Show, by symbol or note, vertical location of item (“under slab,” “in ceiling plenum,” “exposed,” and the like).
   c. Make identification so descriptive that it may be related reliably to Specifications.

3.02 FINAL CLEANING

A. At completion of Work at each Site or of a part thereof and immediately prior to Contractor's request for certificate of Substantial Completion; or if no certificate is issued, immediately prior to Contractor's notice of completion, clean entire site or parts thereof, as applicable.

1. Leave the Work and adjacent areas affected in a cleaned condition satisfactory to Owner and Engineer.
2. Remove grease, dirt, dust, paint or plaster splatter, stains, labels, fingerprints, and other foreign materials from exposed surfaces.
3. Repair, patch, and touchup marred surfaces to specified finish and match adjacent surfaces.
4. Broom clean exterior paved driveways and parking areas.
5. Hose clean sidewalks, loading areas, and others contiguous with principal structures.
6. Rake clean all other surfaces.
7. Leave water courses, gutters, and ditches open and clean.

B. Use only cleaning materials recommended by manufacturer of surfaces to be cleaned.

END OF SECTION

©COPYRIGHT 2016 CH2M HILL

SECTION 02 41 00
DEMOLITION

PART 1 GENERAL

1.01 SECTION INCLUDES

A. Demolition and removal of existing buildings, structures, dock structures and bulkheads.

B. Demolition and removal of site improvements adjacent to a building or structure to be demolished and rubble riprap.

C. Removing belowgrade construction.

D. Disconnecting, capping or sealing, and removing site utilities.

1.02 DEFINITIONS

A. Remove: Detach items from existing construction and legally dispose of them offsite unless indicated to be removed and salvaged or recycled.

B. Remove and Salvage: Detach items from existing construction and deliver them to Owner.

C. Existing to Remain: Existing items of construction that are not to be removed and that are not otherwise indicated to be removed, removed and salvaged, or recycled.

1.03 SUBMITTALS

A. Proposed Environmental-Protection, and Dust-Control Measures: Submit statement or drawing that indicates the measures proposed for use, proposed locations, and proposed time frame for their operation. Identify options if proposed measures are later determined to be inadequate. Contractor shall reference the provided asbestos surveys where necessary for permit, proper disposal, and pricing.

B. Schedule of Building Demolition Activities: Indicate the following:

1. Detailed sequence of demolition and removal work, with starting and ending dates for each activity.
2. Interruption of utility services.
3. Coordination for shutoff, capping, and continuation of utility services.
4. Locations of temporary protection and means of egress, including for other tenants affected by building demolition operations.
5. Coordination of Owner's continuing occupancy of adjacent buildings and partial use of premises.

©COPYRIGHT 2016 CH2M HILL

6. Phase Demolition as indicated on Drawings.

C. Inventory: After building demolition is complete, submit a list of items that have been removed and salvaged.

D. Predemolition Photographs or Videotape: Show existing conditions of adjoining construction and site improvements, including finish surfaces, that might be misconstrued as damage caused by building demolition operations. Submit before Work begins.

1.04 QUALITY ASSURANCE

A. Demolition Firm Qualifications: An experienced firm that has specialized in demolition work similar in material and extent to that indicated for this Project.

B. Regulatory Requirements: Comply with governing EPA notification regulations before beginning demolition. Comply with hauling and disposal regulations of authorities having jurisdiction.

C. Standards: Comply with local regulations.

D. Predemolition Conference: Conduct conference at Project site. Review methods and procedures related to building demolition including, but not limited to, the following:

1. Inspect and discuss condition of construction to be demolished.
2. Review and finalize building demolition schedule and verify availability of demolition personnel, equipment, and facilities needed to make progress and avoid delays.
3. Review and finalize protection requirements.

1.05 PROJECT CONDITIONS

A. Buildings and marine structures to be demolished will be vacated and their use discontinued before start of Work of each respective Phase. Buildings will contain furniture, boxes, files, loose objects, and other miscellaneous items that will be removed by the Owner. These elements shall not be removed and disposed of offsite as part of this Contract by the Contractor.

B. Owner assumes no responsibility for buildings and structures to be demolished. Conditions existing at time of inspection for bidding purpose will be maintained by Owner as far as practical. All materials shall be removed and legally disposed of by Contractor.

©COPYRIGHT 2016 CH2M HILL

C. Underwater materials and debris are known to be present within the project limits. Contractor shall remove all tires, vehicles, cables, vegetation, sunken boats and any other debris from the sea bed/floor prior to any fill operations.

1.06 COORDINATION

A. Arrange demolition schedule so as not to interfere with Owner's and tenants adjacent site operations.

PART 2 PRODUCTS (NOT USED)

PART 3 EXECUTION

3.01 EXAMINATION

A. Survey existing conditions and correlate with requirements indicated to determine extent of demolition required. Unless noted otherwise, all materials shall be removed and legally disposed of offsite by the Contractor.

B. Inventory and record the condition of items to be removed and salvaged.

C. Contractors shall inspect the entire site and determine the extent of work. Contractors shall be responsible for removal of materials and items in their entirety.

3.02 PREPARATION

A. Existing Utilities: Locate, identify, disconnect, and seal or cap off indicated utilities serving buildings and structures to be demolished.

1. Arrange to shut off indicated utilities with utility companies.
2. If utility services are required to be removed, relocated, or abandoned, before proceeding with building demolition provide temporary utilities that bypass buildings and structures to be demolished and that maintain continuity of service to other buildings and structures.
3. Cut off pipe or conduit a minimum of 24 inches below grade. Cap, valve, or plug and seal remaining portion of pipe or conduit after bypassing.

B. Existing Utilities: Do not start demolition work until utility disconnecting and sealing have been completed and verified in writing. All utility disconnects are the Contractor’s responsibility. Owner will provide support where possible.

C. Temporary Shoring: Provide and maintain interior and exterior shoring, bracing, or structural support to preserve stability and prevent unexpected movement or collapse of construction being demolished. Strengthen or add new supports when required during progress of demolition.

©COPYRIGHT 2016 CH2M HILL

D. Removed and Salvaged Items: Comply with the following:

1. Clean salvaged items of dirt and demolition debris.
2. Store items in a secure area until delivery to Owner.

3.03 PROTECTION

A. Existing Facilities: Protect adjacent walkways, loading docks, building entries, and other building facilities not designated to be demolished.

B. Existing Items to Remain: Protect construction indicated to remain against damage and soiling during demolition. When permitted by Engineer, items may be removed to a suitable, protected storage location during demolition and cleaned and reinstalled in their original locations after demolition operations are complete.

C. Existing Utilities: Maintain utility services indicated to remain and protect them against damage during demolition operations.

1. Do not interrupt existing utilities serving adjacent occupied or operating facilities unless authorized in writing by Owner and authorities having jurisdiction.
2. Provide temporary services during interruptions to existing utilities, as acceptable to Owner and to authorities having jurisdiction. Provide at least 72 hours' notice to Owner if shutdown of service is required during changeover.

D. Temporary Protection: Erect temporary protection, such as walks, fences, railings, canopies, and covered passageways, where required by authorities having jurisdiction and as indicated.

1. Provide temporary barricades and other protection required to prevent injury to people and damage to adjacent buildings and facilities to remain.
2. Provide protection to ensure safe passage of people around building demolition area and to and from occupied portions of adjacent buildings and structures.

E. Control dust at site and avoid impacting adjacent areas, interior and exterior, as a result of dust from construction.

3.04 DEMOLITION, GENERAL

A. General: Demolish indicated existing buildings, dock structures and site improvements completely. Use methods required to complete the Work within limitations of governing regulations and as follows:

©COPYRIGHT 2016 CH2M HILL

1. Do not use cutting torches until work area is cleared of flammable materials. Maintain fire watch and portable fire-suppression devices during flame-cutting operations.
2. Maintain adequate ventilation when using cutting torches.
3. Locate building demolition equipment and remove debris and materials so as not to impose excessive loads on supporting walls, floors, or framing.

B. Engineering Surveys: Perform surveys as the Work progresses to detect hazards that may result from building demolition activities.

C. Site Access and Temporary Controls: Conduct building demolition and debris-removal operations to ensure minimum interference with docks, streets, walks, walkways, and other adjacent occupied and used facilities.

1. Do not close or obstruct streets, walks, walkways, or other adjacent occupied or used facilities without permission from Owner and authorities having jurisdiction. Provide alternate routes around closed or obstructed traffic ways if required by authorities having jurisdiction.
2. Use water mist and other suitable methods to limit spread of dust and dirt. Comply with governing environmental protection regulations. Do not use water when it may damage adjacent construction or create hazardous or objectionable conditions, such as ice, flooding, and pollution.

3.05 MECHANICAL DEMOLITION

A. Concrete: Cut concrete full depth at junctures with construction indicated to remain, using power-driven saw, then remove concrete between saw cuts.

B. Concrete Slabs-on-Grade and Asphaltic Concrete Pavement: Saw-cut perimeter of area to be demolished at junctures with construction indicated to remain, then break up and remove.

C. Below Grade Construction: Demolish foundation walls and other below grade construction and legally dispose of offsite.

D. Existing Utilities: Demolish and remove existing utilities and below grade utility structures.

1. Piping: Disconnect piping at unions, flanges, valves, or fittings.
2. Wiring Ducts: Disassemble into unit lengths and remove plug-in and disconnecting devices.

©COPYRIGHT 2016 CH2M HILL

3.06 SITE RESTORATION

A. Below grade Areas: Completely fill below grade areas and voids resulting from building demolition operations with satisfactory soil materials and pavement.

3.07 REPAIRS

A. General: Promptly repair damage to adjacent construction caused by building demolition operations.

B. Where repairs to existing surfaces are required, patch to produce surfaces suitable for new materials.

C. Restore exposed finishes of patched areas and extend restoration into adjoining construction in a manner that eliminates evidence of patching and refinishing.

3.08 DISPOSAL OF DEMOLISHED MATERIALS

A. General: Except for items or materials indicated to be reused, salvaged, reinstalled, or otherwise indicated to remain Owner's property, remove demolished materials from Project site and legally dispose of them in an approved landfill.

1. Do not allow demolished materials to accumulate onsite.
2. Remove and transport debris in a manner that will prevent spillage on adjacent surfaces and areas.

B. Burning: Do not burn demolished materials.

C. Disposal: Transport demolished materials off Owner's property and legally dispose of them.

3.09 CLEANING

A. Clean adjacent structures and improvements of dust, dirt, and debris caused by building demolition operations. Return adjacent areas to condition existing before building demolition operations began.

END OF SECTION

©COPYRIGHT 2016 CH2M HILL

SECTION 03 10 00
CONCRETE FORMWORK

PART 1 GENERAL

1.01 SUMMARY

A. Section includes formwork for structural concrete and related accessories.

1.02 REFERENCES

A. American Concrete Institute:

1. ACI 301 - Specifications for Structural Concrete Buildings (Latest Edition).
2. ACI 318 - Building Code Requirements for Reinforced Concrete (Latest Edition).
3. ACI 347 - Recommended Practice for Concrete Formwork (Latest Edition).
4. ACI Special Publication No. 4: Formwork for Concrete (Latest Edition).

1.03 SYSTEM DESCRIPTION

A. Structural Concrete Formwork: For surfaces of cast-in-place concrete to be unexposed or to receive rubbed finish.

B. Design/Performance Requirements: Design, engineering and construction of formwork and shoring is responsibility of the Contractor.

1. Design formwork with sufficient strength to withstand forces due to placement and vibration and sufficient rigidity to maintain specified tolerances.
2. Design loads, lateral pressure, and allowable stresses in accordance with ACI 347.

1.04 SUBMITTALS

A. Product Data: Proprietary materials and items, including waterstops, joint systems, and others.

B. Shop Drawings: Show form construction including jointing, special form joints and reveals, location and pattern of form tie placement, and other items which affect exposed concrete visually.

©COPYRIGHT 2016 CH2M HILL

PART 2 PRODUCTS

2.01 FORM MATERIALS

A. Structural Concrete Forms for Cap and Encasement:

1. New material designed to support wet concrete without deflection and design to withstand external loadings from wave and tidal actions.

2.02 RELATED MATERIALS

A. Form Coatings: Colorless commercial formulation form release and sealer compounds that will not bond with, stain, nor adversely affect concrete surfaces, and will not impair subsequent treatments of concrete surfaces.

B. Form Ties: Adjustable length, removable or snapoff metal form ties, designed to prevent form deflection and to prevent spalling concrete upon removal, 1-1/2 in. break back, and max. hole left 1-1/4 in. diameter.

C. Joint Fillers: Premolded mastic strips, asphalt impregnated, ASTM D1751.

D. Fasteners and Anchorages: Nails, spikes, bolts, lag bolts and other types sized as required to maintain formwork in place.

PART 3 EXECUTION

3.01 EXAMINATION

A. Verify lines, levels, and measurements required before proceeding with formwork.

B. Coordinate the installation of joint materials, reinforcing steel, and vapor retarders with placement of forms.

3.02 INSTALLATION TOLERANCES

A. Allowable tolerances for Structural Concrete Forms shall comply with ACI 301 and ACI 347.

B. Allowable tolerances for camber in slabs and beams shall comply with ACI 301.

3.03 ERECTION

A. Design, erect, support, brace, and maintain formwork to support vertical and lateral, static, and dynamic loads that might be applied until such loads can be supported by concrete structure.

B. Construction:

©COPYRIGHT 2016 CH2M HILL

1. Construct formwork so concrete members and structures are of correct size, shape, alignment, elevation, and position.
2. Build formwork to be readily removable without impact, shock, or damage to cast-in-place concrete surfaces and adjacent materials.
3. Provide openings, offsets, sinkages, keyways, recesses, moldings, rustications, reglets, chamfers, blocking, screeds, bulkheads, anchorages and inserts, and other features required in work.
4. Solidly butt joints and provide back-up at joints to prevent leakage of cement paste.
5. Kerf wood inserts for forming keyways, reglets, recesses, and the like, to prevent swelling and for easy removal.
6. Provide temporary openings at bottoms of forms to facilitate cleanout and inspection. Close openings with tight fitting panels and neat joints so that joints will not be apparent in exposed concrete surfaces.
7. Locate form joints in architectural concrete forms as approved on Shop Drawings. Construct architectural form face prior to forms for unexposed surfaces to provide access for joint treatment and adjustment.

C. Chamfer exposed corners and edges as indicated, or if not indicated, provide 2 in. x 2 in. at expansion joints, tool adjacent edges to 1/8” radius.

D. Provide openings in concrete formwork to accommodate work of other trades. Determine size and location of openings, recesses, and chases from trades providing such items. Accurately place and securely support items built into forms.

E. Thoroughly clean forms and adjacent surfaces to receive concrete. Remove chips, wood, sawdust, dirt, or other debris just before concrete is placed. Retighten forms and bracing after concrete placement to eliminate mortar leaks and maintain proper alignment.

F. Construction Joints:

1. Locate and install formed construction joints at rustications or, if not indicated, locate so as not to impair strength and appearance of the structure, and as approved by the Engineer.
2. Provide keyways at least 1-1/2 in. deep in construction joints in walls, slabs, and between walls and footings; accepted bulkheads designed for this purpose may be used for slabs. (unless otherwise noted or indicated).

3. Place construction joints perpendicular to main reinforcement. Continue reinforcement across construction joints, (except as otherwise indicated).

©COPYRIGHT 2016 CH2M HILL

G. Isolation Joints in Slabs-on-Ground: Construct continuous joint filler at points of contact between slabs-on-ground and vertical surfaces, such as column pedestals, foundations walls, grade beams, and elsewhere as indicated.

H. Form Joint Treatment: Gasket, plug, tape, and caulk joints and voids in architectural concrete forms to eliminate leakage.

I. Waterstops: Provide rubber waterstops in construction joints of below grade walls and in joints between below grade slabs and walls. Install waterstops to form continuous diaphragm in each joint. Fabricate field joints in waterstops in accordance with manufacturer's printed instructions.

J. Form Coatings: Apply after forms are erected and joints are sealed but prior to placing reinforcing steel, anchoring devices, and embedded items.

1. Seal surfaces of wood rustications with 2 coats of form sealer.
2. Spray apply one coat of release agent to formwork faces except where concrete surfaces are scheduled to receive special finishes or applied coatings.
3. Coat steel forms with a non-staining, rust- preventative form oil to protect against rusting. Rust-stained steel formwork is not acceptable.

K. Embedded Items: Set and build into work anchorage devices and other embedded items required for other work that is attached to, or supported by, cast-in-place concrete.

3.04 RE-USE OF FORMS

A. Clean re-used forms of concrete matrix residue, repair and patch as required to return forms to acceptable surface condition.

B. Recoat contact surfaces of forms with a form coating compound as specified.

3.05 REMOVAL OF FORMS AND SHORING

A. Remove formwork progressively and in accordance with ACI 301 and ACI 347 so that no unbalanced loads are imposed on the structure.

B. Do not remove formwork until members have acquired strength required to support their own weight plus imposed loads and the concrete has attained 75 percent of required 28 day compressive strength.

C. Concrete forms for the steel bulkhead encasement shall not be removed until the concrete has attained 75 percent of required 28 day compressive strength.

D. Formwork not directly supporting weight of concrete, may be removed after 24 hours after placing concrete, provided concrete is sufficiently hard to not

©COPYRIGHT 2016 CH2M HILL

be damaged by form removal operations, and provided curing and protection operations are maintained.

E. In the event the Contractor wishes to remove formwork at an earlier time than specified, the Contractor shall pay for and have testing laboratory obtain and test 2 additional concrete test cylinders for each case of early form removal, to confirm strength requirement for early form recovery.

END OF SECTION

©COPYRIGHT 2016 CH2M HILL

©COPYRIGHT 2016 CH2M HILL

SECTION 03 21 00
CONCRETE REINFORCEMENT

PART 1 GENERAL

1.01 SUMMARY

A. Section includes steel reinforcement for cast-in-place concrete.

1.02 REFERENCES

A. American Concrete Institute (ACI):

1. ACI 301-Specifications for Structural Concrete for Buildings (Latest Edition).
2. ACI 315-Details and Detailing of Concrete Reinforcement (Latest Edition).
3. ACI 318-Building Code Requirements for Reinforced Concrete (Latest Edition).

B. American Society for Testing and Materials (ASTM):

1. ASTM A82-Cold Drawn Steel Wire for Concrete Reinforcement.
2. ASTM A615-Deformed and Plain Billet-Steel Bars for Concrete Reinforcement including Supplement S1.

C. Concrete Reinforcing Steel Institute (CRSI):

1. CRSI-Manual of Practice.
2. CRSI 63-Recommended Practice for Placing Reinforcing Bars.
3. CRSI 65-Recommended Practice for Placing Bar Supports, Specifications, and Nomenclature.

1.03 SUBMITTALS

A. Shop Drawings: Prepare in accordance with ACI 315, Manual of Standard Practice for Detailing Reinforced Concrete Structures, showing bar schedules, stirrup spacing, diagrams of bent bars, splicing and laps of bars, wire fabric, supports, arrangement of reinforcement, and concrete cover. Include special reinforcement required for openings through concrete. Do not scale dimensions from drawings to determine lengths of reinforcement.

B. Certificates:

1. Mill test certificates identifying physical and chemical analysis of each load of reinforcing steel delivered.

©COPYRIGHT 2016 CH2M HILL

PART 2 PRODUCTS

2.01 REINFORCING MATERIALS

A. Reinforcing Bars: ACI 301 unless otherwise specified. Deformed ASTM A 615, including supplementary requirement S1 with the bars marked S, Grade 60.

B. Steel Wire: ASTM A 82, plain, cold-drawn steel.

2.02 RELATED MATERIALS

A. Supports for Reinforcement: ACI Class B or C bolsters, chairs and spacers.

1. Wire bar type, plastic coated, epoxy coated or stainless steel.
2. For slabs-on-grade, use supports with sand plates or horizontal runners where base material will not support chair legs.

B. Tie Wire: 16 ga. annealed; black steel wire for uncoated reinforcement.

2.03 FABRICATION

A. Fabricate reinforcement in accordance with ACI 315.

B. Fabricate in lengths so that reinforcement splices not indicated on drawings will occur at points of minimum stress and so that no more than 50 percent of reinforcement is spliced at a location, unless shown otherwise.

C. Fabricate dowels for footings to wall and columns of same size bars and spacings as wall and column reinforcement above. Lap splices for dowels shall be as indicated herein in conformance with an ACI Class B splice.

D. Shop fabricate bent and cut bars around openings and sleeves.

E. Hooks and bends shall conform to ACI 315 unless shown otherwise on the drawings.

2.04 REINFORCEMENT SPLICES

A. Splice reinforcement in conformance with an ACI Class B tension splice. (1995 ACI 318 Code).

©COPYRIGHT 2016 CH2M HILL

PART 3 EXECUTION

3.01 PLACING REINFORCEMENT

A. Comply with CRSI Manual of Standard Practice, ACI 315, and ACI 318 for details and methods of reinforcement placement and supports, and as herein specified.

B. Avoid cutting or puncturing vapor retarder during reinforcement placement.

C. Clean reinforcement of loose rust and mill scale, earth, and other materials which reduce or destroy bond with concrete.

D. Locate and support reinforcing by metal chairs, runners, bolsters, spacers, and hangers, as required. Dense concrete brick supports may be used for reinforcement in slabs-on-ground and footings.

E. Place reinforcement to obtain coverages for concrete protection specified in Section 03 31 29, Cast-in-Place Concrete for Marine Structures. Arrange, space, and securely wire tie bars and bar supports to hold reinforcement in position during concrete placement operations.

F. The clear distance between parallel bars in a layer shall be the nominal diameter of the bar, but not less than one inch.

G. Install welded wire fabric in as long lengths as practicable. Lap adjoining pieces at least one full mesh and lace splices with tie wire. Offset end laps in adjacent widths.

H. Where conduit, piping, inserts, and other penetrations or sleeves interfere with the placing of reinforcing steel, notify Architect/Engineer and obtain directions for relocating prior to placing concrete.

I. Do not field bend or field cut reinforcing bars around openings or sleeves, unless indicated to do so.

END OF SECTION

©COPYRIGHT 2016 CH2M HILL

©COPYRIGHT 2016 CH2M HILL

SECTION 03 31 29
CAST-IN-PLACE CONCRETE

PART 1 GENERAL

1.01 DESCRIPTION:

A. The Work consists of the use of fly ash as part of the cementitious material for Cast-in-Place Concrete for Marine Structures. The end product shall be a high quality, low permeability and corrosion resistant concrete meeting ACI 318.14 Exposure Category C2. To procure a quality product, it is imperative the 28-day moist curing procedures specified herein be rigorously followed.

B. To minimize permeability and increase durability, the mix design includes the following attributes: low water-to-cementitious material ratio; limit on maximum large aggregate size; use of water-reducing high-range admixtures (extended life superplasticizer); and Type F fly ash.

C. This section is not for Flowable Fill – See Section 03 34 00 – Flowable Fill.

D. This section is not for Drilled Shaft Concrete – See Section 31 63 29 0 Drilled Concrete Piers.

1.02 REFERENCES

A. ASTM:

1. ASTM C31: Making and Curing Concrete Test Specimens in the field.
2. ASTM C33: Concrete Aggregates.
3. ASTM C39: Compressive Strength of Molded Concrete Cylinder.
4. ASTM C94: Ready-Mixed Concrete.
5. ASTM C109: Compressive Strength of Hydraulic Cement Mortars.
6. ASTM C143 (Rev. A): Slump of Portland Cement Concrete.
7. ASTM C150: Portland Cement.
8. ASTM C171 (R1986): Sheet Materials for Curing Concrete.
9. ASTM C172: Sampling Fresh Concrete.
10. ASTM C231: Air Content of Freshly Mixed Concrete by the Pressure Method.
11. ASTM C260: Air Entraining Admixtures for Concrete.
12. ASTM C289: Potential Reactivity of Aggregates (Chemical Method).
13. ASTM C309: Liquid Membrane-Forming Compounds for Curing Concrete.
14. ASTM C494: Chemical Admixtures for Concrete.
15. ASTM C618: Fly Ash and Raw or Calcined Natural Pozzolan for Use as a Mineral Admixture in Portland Cement Concrete.
16. ASTM C881: Epoxy-Resin-Base Bonding Systems for Concrete.
17. ASTM C920: Elastomeric Joint Sealants.

©COPYRIGHT 2016 CH2M HILL

18. ASTM C1077: Practice for Laboratories Testing Concrete and Concrete Aggregates for Use in Construction and Criteria for Laboratory Evaluation.
19. ASTM C1107: Packaged Dry, Hydraulic – Cement Grout (Nonshrink)
20. ASTM D994: Premolded Asphalt Joint Material.
21. ASTM E329: Inspection and Testing Agencies for Concrete, Steel and Bituminous Materials Used in Construction.

B. American Concrete Institute:

1. ACI 211.1 - Selecting Proportions for Normal Weight Concrete.
2. ACI 214R - Evaluation of Compression Test Results of Field Concrete.
3. ACI 301 - Specifications for Structural Concrete for Buildings.
4. ACI 304R - Measuring, Mixing, Transporting and Placing Concrete.
5. ACI 304.2R - Placing Concrete by Pumping Methods.
6. ACI 305R - Hot Weather Concreting.
7. ACI 306R - Cold Weather Concreting.
8. ACI 309R - Consolidation of Concrete.
9. ACI 318 - Building Code Requirements for Reinforced Concrete.

C. American Association of State Highway and Transportation Officials, (AASHTO):

1. "Standard Specifications for Highway Bridges".
2. M182 – Burlap Cloth made from Jute or Kenaf and Cotton Mats.
3. T259 – Resistance of Concrete to Chloride Ion Penetration.
4. T260 – Sampling and Testing for Chloride Ion in Concrete and Concrete Raw Materials.

D. US Army Corps of Engineers (USACE): CRD C621 – Specification for Non-Shrink Grout.

1.03 SUBMITTALS

A. Action Submittals:

1. Product Data for Concrete Mix Proportions.
   a. Proportions by weight of ingredients in mix.
   b. Solid volume calculation of ingredients.
   c. Air content.
   d. Unit weight.
   e. Water-cementitious ratio.
   f. Trial mix compressive strengths at 3, 7, and 28-days.
2. Manufacturer’s Technical Data Sheet:
   a. Concrete admixtures.
   b. Aggregates – Fine and Course.
   c. Fly Ash.

©COPYRIGHT 2016 CH2M HILL

d. Bonding Compound.
e. Epoxy Adhesive.
f. Repair Mortar.

3. Mix Designs:
   a. Laboratory trial mix designs based on Method 1 of ACI 301.
   b. Field experience mix designs based on Method 2 of ACI 301, plus the 30 consecutive test results of past performance.
   c. Historical statistical data used for basis of each mix design.
   d. Include specific admixture names and proportions for each mix design.
   e. Submit separate mix designs for each specified strength mix, tremie mix, and pump mix.
   f. Indicate on each mix where the concrete will be used in the structure.

B. Informational Submittals:

1. Manufacturer's recommendation for corrosion inhibiting admixture dosage, method of batching, and any changes in finishing procedures or timing.
2. Manufacturer's instructions for batching, placing, finishing, and curing of concrete.
3. Certificates:
   a. Material Certificates, signed by Manufacturer and Contractor, certifying that each material item and product complies with specified requirements.
   b. Qualification Certificates signed by the listed agencies, certifying that the Plant, Testing Agency and Technician meets the specified qualification requirements.
   c. Manufacturer's Certificate of Compliance that microsilica mineral admixture complies with requirements of this specification.
   d. Manufacturer's Certificate of Proper Installation for placement, finishing, and moist curing techniques to be used.

C. Placement Log: Prepare and maintain a log of cast-in-place marine concrete containing at the minimum the following information:

1. Date of pour.
2. Location and extent of pour.
3. Quantity of concrete.
4. Air temperature.
5. Tests and samples taken.
6. Curing method used.
7. Date of form removal.

©COPYRIGHT 2016 CH2M HILL

1.04 QUALITY ASSURANCE

A. Maintain in the field office, as a minimum, a copy of ACI 301.

B. Ready Mixed Concrete Plant Qualification: Currently certified to comply with approval requirements of one or more of the following:

1. Concrete Materials Engineering Council.
2. Check List for Plant Certification of the National Ready Mixed Concrete Association.
3. Prestressed Concrete Institute.

C. Testing and Inspection Agency Qualification: In addition to the requirements of Section 01400, currently accredited by one or more of the following:

1. Concrete Materials Engineering Council.
2. National Voluntary Laboratory Accreditation Program (NVLAP).
3. Other accreditation authority of equal standing to the above, on the basis of its compliance with the requirements of ASTM C1077.

D. Testing and Inspection Technician Qualification: “ACI Certified Concrete Field Technicians Grade I” or person with equivalent qualifications.

E. Concrete Preconstruction Conference:

1. A Concrete Preconstruction Conference shall be held at the Concrete Supplier's Yard to be attended by the Contractor and his concrete supplier, manufacturer's technical representative(s), the Owner, and the Engineer or RFR. The Contractor and the concrete supplier shall present their proposed methods for the following items:
   a. Materials, mixing, transporting, placing, finishing and curing concrete;
   b. Evaporation Prevention Procedures for protecting concrete from plastic shrinkage cracking during placing and finishing;
   c. Protecting fresh concrete from rain or other adverse weather; and
   d. Schedule for production of design mix, demonstration batches and production.
2. The admixture and fly ash manufactures shall provide a qualified technical representative(s) who shall be available to assist the Contractor, concrete supplier, and Engineer throughout construction. The qualifications of the technical representative(s) shall be submitted to the Engineer for review and approval prior to construction. The representative(s) shall review the Contractor's design mix, attend the Concrete Preconstruction Conference, inspect the trial batches, inspect the Contractor's first concrete production casting and provide any other

©COPYRIGHT 2016 CH2M HILL

technical assistance requested by the Contractor, concrete supplier, or Engineer.

3. At the Concrete Preconstruction Conference, the Contractor shall submit to the Engineer for approval a detailed written Quality Control Plan to address each of the above items. The manufacturer's technical representative(s), who shall recommend approval or disapproval to the Engineer, shall review the Contractor's Quality Control Plan (Plan) in detail. Concrete demonstration batches shall only be prepared under this Section in accordance with this Plan or revised Plan that has been approved by the Engineer. This Plan may be modified as a result of the demonstration batch operation upon approval of the Engineer.

PART 2 PRODUCTS

2.01 GENERAL

A. Products furnished in conjunction with the Work of this section shall be those of one manufacturer, to the fullest extent possible, to achieve structural compatibility, and standardization for appearance and maintenance.

2.02 CONCRETE MATERIALS

A. Portland Cement: ASTM C150, Type II. Use one brand of Type II cement throughout the project.

B. Fly Ash (Pozzolan): Class F fly ash in accordance with ASTM C618, except as modified herein:

1. ASTM C618, Table 1, Loss of Ignition: Maximum 3 percent.
2. ASTM C618, Table 2, Water Requirement: Maximum 100 percent of control.
3. ASTM C618, Table 3, Effectiveness in Contributing to Sulfate Resistance: Procedure A after 6-month sulfate exposure, maximum 0.05 percent.
4. ASTM C618, Table 3, Effectiveness in Contributing to Sulfate Resistance: Procedure B, expansion of test mixture as a percentage of sulfate resistance cement control, after at least 6-month exposure, maximum 100 percent.
5. Use one source of fly ash throughout project.
6. Add fly ash with cement.

C. Aggregates:

1. Coarse: Gradation size shall be #67, in conformance with ASTM C33. Clean, washed, sound and crushed, from a single source. Other gradation sizes will not be permitted.
2. Fine: ASTM C33, clean, washed natural sand, sound and uncoated

©COPYRIGHT 2016 CH2M HILL

grains. Screenings are not acceptable.
3. Aggregates shall be free of chlorides.
4. Aggregates shall be free of substances that are deleteriously reactive with the alkalis in the cement in an amount sufficient to cause excessive expansion of the concrete. Test in accordance with ASTM C289.
5. Aggregates shall be washed before use if required.

D. Water: Clean, potable, not containing chloride ions.

E. Admixtures - Chloride Content:

1. Admixtures shall not contain more chloride ions than are present in the local municipal drinking water.
2. The maximum water soluble chloride ion concentration in hardened concrete (contributed from water, aggregates, cementitious materials and admixtures) shall not exceed 0.10 percent by weight of cement.
3. Admixtures shall not contain calcium chloride.
4. Submit certification stating that each specific admixture does not contain calcium chloride or chloride ions, and that they were not used in the manufacturing process.

F. Air-Entraining Admixture: ASTM C260 neutralized Vinsol resin. Source Products/Mfgs.:

1. Sika AER/Sika Corp.
2. MB-VR/Master Builders, Inc.
3. Daravair/W.R. Grace.

G. Water-Reducing Admixture: ASTM C494, Type A (Compatible with Calcium Nitrate).

H. Source Products/Mfgs.:

1. Darex WRDA-79/W.R. Grace.
2. Pozzolith 220N/Master Builders, Inc.
3. Plastocrete 161/Sika Corp.

I. Water-Reducing, High Range and Retarding Admixture (Extended Life Superplasticizer): ASTM C494, Type G. Source Products/Mfgs. (Compatible with Calcium Nitrate):

1. Rheobuild 716/Master Builders, Inc.
2. Eucon 537, Euclid Chemical Co.
3. Daracem-100/W.R. Grace.

©COPYRIGHT 2016 CH2M HILL

J. Non-Chloride Accelerator Admixture: ASTM C494, Type C, and containing no chloride ions. Source Products/Mfgs. includes:

1. Daraset/W.R. Grace.
2. Pozzutec 20, Master Builders, Inc.
3. Plastocrete 161FL, Sika Corp.

K. Water Reducing, Retarding Admixture: ASTM C494, Type D. Source Products/Mfgs.:

1. Pozzolith 100XR/Master Builders, Inc.
2. Daratard 17/W.R. Grace.
3. Plastocrete 161MR/Sika Corp.

L. Calcium nitrite: calcium nitrite shall conform to these specifications and shall be furnished in a slurry mixed with potable water. Calcium nitrite may act as an accelerating admixture with regard to setting time for the concrete. Use of retarding admixtures such as type b and type d admixtures conforming with aashto m194 may be necessary to control the setting of the concrete to provide adequate time for placing and finishing. Alternatively, a neutral setting calcium nitrite may be used. In either case, the active ingredient shall be calcium nitrite (ca(no2)2). The calcium nitrite shall be furnished in potable water solution containing 30 + 1 percent calcium nitrite by weight (10.6 lbs. Calcium nitrite per gallon + 0.1 lbs per gallon). Other concentrations may be furnished when approved by the engineer. Unless otherwise specified herein, the corrosion inhibitor calcium nitrite shall be used in an aqueous solution at the rate of 4.5 gallons per cubic yard.The supplier shall furnish the engineer laboratory test data from an fdot approved laboratory on the material supplied indicating that the material furnished conforms to the required concentration.

The calorimetric test method shall be used for this determination. Tolerance for acceptance will be + one percent calcium nitrite by weight. Material

Certification acceptance will be based on the same sampling methodology as Cement.

Calcium nitrite shall come from the same manufacturing source throughout the project.”

2.03 RELATED MATERIALS

A. Non-Shrink Grout: ASTM C1107 and USACE CRD-C621, non-metallic factory pre-mixed grout, minimum compressive strength of 2400 psi in 2 days and 7000 psi in 28 days. Source Products/Mfgs.:

1. Masterflow 713/Master Builders, Inc.

©COPYRIGHT 2016 CH2M HILL

2. Euco-NS/Euclid Chemical Co.
3. Five Star Grout/U.S. Grout Corp.
4. Vibropruf No. 11/Lambert Corp.

B. Absorptive Cover: Burlap cloth made from jute or kenaf, weighing approximately 10 oz. per sq. yd., complying with AASHTO M 182, Class 3.

C. Moisture-Retaining Cover: One of the following, complying with ASTM C171.

1. Waterproof paper.
2. Polyethylene film.
3. Polyethylene-coated burlap.

D. Evaporation Retarder Film:

1. Evaporation retarder film shall meet or exceed the requirements of this specification. Dilution and application at the job site shall conform to the manufacturer's instructions.
2.
3. An independent laboratory approved by the Engineer shall test the product. The laboratory shall supply the certification that the product meets or exceeds the requirements of this specification and this certification shall be delivered with the product.
4. Testing shall confirm the monomolecular film applied at the recommended rate shall reduce evaporation as follows:
   a. Not less than eighty percent when shaded and winds blowing at 10 MPH;
   b. Not less than forty percent when exposed to the sunlight without wind blowing.
5. Testing shall be for a duration of seven hours. Testing conditions shall be as follows:
   a. Temperature not less than 70 degrees F;
   b. Humidity not greater than 25 percent.
6. CONFILM as manufactured by BASF Chemical Company, Inc. is an approved product.

E. Bonding Compound: Acrylic or Styrene Butadiene base. Source Products/Mfgs.:

1. Acrylbond/Lambert Corp.
2. Sonocrete/Sonneborn-Rexnord.
3. Acrylic Bondcrete/The Burke Co.
4. Acryl 60/Thoro Systems, Inc.

©COPYRIGHT 2016 CH2M HILL

F. Epoxy Adhesive for dowel installation: ASTM C881, Type 1, Grade 1, Class B, Two- component material suitable for use on dry or damp surfaces. Source Products/Mfgs.:

1. Hilti-HIT RE500.
2. Sikadur Hi-Mod/Sika Corp.
3. Euco Epoxy 452 or 620/Euclid Chemical Co.
4. Epiweld 580 or 560/Lambert Corp.
5. Probond 822 or 823/Protex.

G. Repair Mortar: Two-component, polymer modified, cementitious mortar, designed to develop minimum compressive strength of 5,000 psi in 3 days, 6,500 psi in 28 days (ASTM C109), and bond strength of 2200 psi in 28 days. Source Products/Mfgs.:

1. SikaTop 122 Repair Mortar/Sika Corp.
2. Euco Verticoat/Euclid Chemical Co.

H. Sealing Materials: Material for sealing and filling joints and for sealing premolded joint filler material, shall be a multipart polyurethane, nonsag, immersible system, 100 percent solids compound, ASTM C920, Type M, Grade NS, Class 25, with a shore D hardness of 35 to 50. Source Products/Mfgs.:

1. Sikaflex 2cNS/Sika Corp.
2. Sonneborn NP-2/BASF.

I. Premolded Asphalt Joint Material: ASTM D994.

J. Penetrating Sealer: Alkylalkoxysilane penetrating sealer, with 40 percent silane and active materials, meeting the following requirements:

1. Resistance to Chloride-ion Penetration:
   a. Less than 0.52 pounds per cubic yard (Criteria of 1.5) at the ½-inch level.
   b. 0.00 pounds per cubic yard (Criteria of 0.75) at the 1-inch level.
2. Minimum Percent Reduction – NCHRP 244:
   a. Water weight gain – 85% reduction (Series II – cube test).
   b. Absorbed Chloride – 87% reduction (Series II – cube test).
   c. Absorbed Chloride – 95% reduction (Series IV – Southern climate).
3. Scaling Resistance – ASTM C672: Zero (0) rating – “No Scaling” (100 cycles).
4. VOC Compliant EPA: Less than 350 g/l VOC content (EPA Method 24).
5. Enviroseal 40, as manufactured by BASF Chemical Company, Inc., is an approved product.

©COPYRIGHT 2016 CH2M HILL

K. Liquid Membrane-Forming Compound: ASTM C309, white-pigmented, Type 2, Class B.

L. Cement Drypack Mix: Combine one part Portland cement to two-parts fine aggregate and water sufficient to hydrate cement and produce a stiff mix. Do not mix more than can be used in 30 minutes at a time.

2.04 PROPORTIONING AND DESIGN OF MIXES

A. Provide design mixes for each type and strength of concrete by either laboratory trial batch or past field experience methods as specified in ACI 301.

1. Proportion materials as specified in ACI 211.1, except as modified herein.
   Class F Fly Ash shall be utilized at the rate of 25 percent maximum to 20 percent minimum of the total cementitious material on a pound for pound basis.
2. The use of a high-range water-reducing (Type G – Extended Life Superplasticizer) admixture is required. The high-range water-reducing admixture shall be compatible with fly ash and all admixtures.
3. Do not begin concrete production until the Engineer has reviewed mixes.

B. Pump Mix Design: Provide same proportions as for other concrete specified herein, except use rounded pea gravel aggregate, ACI 304.2R.

C. Tremie Mix Design: Provide same proportions as for other concrete specified herein, except that the cement content shall be 752 pounds/cubic yard, Calcium Nitrite shall be 5.5 gallons per cubic yard, the slump shall be 6 inches to 9 inches and the aggregate shall be rounded pea gravel (Number 9 coarse aggregate). Tremie mix shall also include an antiwashout admixture. Rheomac UW450, as manufactured by BASF Chemical Company, Inc., is an approved product.

D. Determine Required Average Strength (f'cr) in accordance with ACI 318, Chapter 5, and ACI 301. Evaluate compressive strength results of field concrete in accordance with ACI 214.

1. Standard Deviation:
   a. Based on at least 30 consecutive tests or two groups of consecutive tests totaling at least 30 tests.
   b. Where based on less than 30 consecutive tests, standard deviation shall be established using modification factor.
2. Required Average Strength:
   a. Based on specified compressive strength plus the established

©COPYRIGHT 2016 CH2M HILL

standard deviation times a multiplier.

b. Submit written documentation showing all computations used to determine Required Average Strength.

3. Documentation of Average Strength:

a. Based on field strength test records or trial mixtures.

b. Test records consisting of at least 10 but not more than 30 consecutive tests may be used, provided test records occur during a period of time not less than 45 days.

E. Schedule of Concrete Types: Provide mix designs for the compressive strength scheduled with the following minimum properties:

Minimum 28-day Compressive Strength (PSI)	Maximum Water-Cementitious Material Ratio	Minimum Portland Cement Content (lb/cubic yard)
5000 - Classified As ACI Exposure Class C2	Determined by Mix Design Testing, Not to Exceed 0.40 lb/lb.	564

1. Optimum water-cementitious material ratio for mix designs of 5000 psi and greater, 28-day compressive strength shall be determined by various mix designs, not to exceed 0.40.
2. The water-cementitious ratio shall be calculated using total dry weight of cementitious material (cement and fly ash) and total water (mix water and water from calcium nitrite solution, other admixtures and aggregate moisture).
3. Each admixture shall be dispensed separately into the mix and at different times during mixing, unless otherwise approved in writing by the microsilica manufacturer.
4. Introduce admixtures in quantities and according to methods recommended by the admixture manufacturer. Do not use calcium chloride.

F. Air Entrainment: Provide concrete with total air content as listed below, and as measured in accordance with ASTM C231. Mix designs utilizing superplasticizer shall use a neutralized Vinsol resin air-entraining admixture.

1. Air content: 1 percent to 5 percent.

G. Slump Limits: Concrete, when placed at the forms, shall have a slump within the following limits as measured in accordance with ASTM C143.

1. Slump Range: 3 inches to 7 inches.

©COPYRIGHT 2016 CH2M HILL

2.05 CONCRETE MIXING

A. Provide batch ticket for each batch discharged and used in work, indicating project identification name and number, date, mix number, mix strength, mix time, quantity, and amount of water introduced at the plant and at the site.

B. Ready-Mix Concrete: Comply with requirements of ASTM C94, and as herein specified.

1. Determine total mixing time for concrete in accordance with ASTM C94 for type of mixing equipment utilized.
2. Do not use concrete that has been in truck for more than 1-1/2 hours after addition of water, or had more than 300 revolutions, or concrete that has become harsh or nonplastic. The 1-1/2 hour time limit may be extended by approval in writing by the Engineer, with use of the superplasticizer. Provide relative information on extended life and additional site dosage with mix design.
3. If the slump varies from the target values in excess of 1-1/2 inches or the air content varies from the target air in excess of 1-1/2 percent, make immediate adjustments to the concrete mix, to correct these properties for succeeding batches.
4. No water shall be added at the plant or at the site, in excess of the design water as specified in the approved mix design.
5. Concrete containing a superplasticizer shall not have water added at the site. If necessary, an additional dose of superplasticizer may be added at the site to extend workability.
6. Start the calcium nitrite solution as soon as possible and before the other admixtures have been incorporated into the mixture. The calcium nitrite shall be thoroughly mixed before adding the superplasticizers and other admixtures.
7. The Contractor shall bear total responsibility for site additions to the mix and for the effects of such changes on the quality, durability and strength of the concrete.
8. Ready mix supplier shall certify to the compatibility of all materials and admixtures being proposed.
9. When air temperature is between 85 and 90 degrees F (30 and 32 degrees C), reduce mixing and delivery time from 1-1/2 hours to 75 minutes; when air temperature is above 90 degrees F (32 degrees C), reduce mixing and delivery time to 60 minutes. Do not place concrete that is 90 degrees F or higher.
10. During hot weather, or under conditions contributing to rapid setting of concrete, a shorter mixing time than specified in ASTM C94 may be required.

©COPYRIGHT 2016 CH2M HILL

PART 3 EXECUTION

3.01 EXAMINATION AND PREPARATION

A. Examine formwork, reinforcing steel, embed inserts, sleeves, and joint materials for proper installation.

B. Do not begin placement of concrete until formwork and reinforcement have been examined and approved by Engineer.

C. Verify that formwork and structural excavations have been cleaned of foreign matter and water removed.

D. Do not proceed until unsatisfactory work has been corrected.

E. Notify Engineer at least 2 working days in advance of scheduled pour to allow time for adequate observation.

3.02 INSTALLATION

A. Erect formwork and joints, and install reinforcing steel and accessories as required and specified in Sections 03 10 00 and 03 21 00.

B. Concrete Placement:

1. Moisten wood forms immediately before placing concrete where form coatings are not used.
2. Comply with ACI 304R, Recommended Practice for Measuring, Mixing, Transporting, and Placing Concrete, and as herein specified.
3. Deposit concrete in forms in horizontal layers not deeper than 24 inches and in a manner to avoid inclined construction joints. Limit vertical drop not to exceed 4-1/2 feet.
4. Where placement consists of several layers, place each layer while preceding layer is still plastic to avoid cold joints.
5. Consolidate placed concrete by internal mechanical vibrating equipment supplemented by hand spading, rodding, or tamping in accordance with ACI 309R. Vibrators shall have a minimum frequency of 8,000 vibrations per minute with amplitude to consolidate effectively.
   a. Insert vibrators vertically at spacings that are approximately 1-1/2 times the radius action so that the area visibly affected by the vibrator overlaps the adjacent just-vibrated area by a few inches.
   b. Spacing shall not exceed 18 inches on center. Do not move vibrators horizontally through concrete.
   c. Keep the vibrator at least 2-1/2 inches away from the form face.
   d. Rapidly plunge the vibrator vertically through the freshly placed concrete layer at least 6 inches into preceding layer. With a surging up and down motion slowly extract the vibrator from the

©COPYRIGHT 2016 CH2M HILL

concrete until the vibrator head is about to become exposed then rapidly remove the vibrator completely to prevent air bubbles from becoming drawn into the top of the freshly placed layer.

e. Keep the vibrator moving while in the concrete to prevent harmonic vibrations from distorting forms or causing form failure.

6. Deposit and consolidate concrete slabs in a continuous operation, within limits of construction joints, until the placing of a panel or section is completed.
7. Bring slab surfaces to correct level with straightedge and strikeoff. Do not disturb slab surfaces prior to beginning finishing operations.
8. Maintain reinforcing, inserts, embeds, and joints in proper position during concrete placement operations.

C. Pumping Placement of Concrete: Provide pumps, pipelines and accessory equipment in accordance with ACI 304R and ACI 304.2R and as herein specified.

1. Provide minimum pump size of 3 inch diameter.
2. Provide standby pump at the site for use in case of a breakdown or plugged pipeline.

D. Reinforcement Concrete Coverage:

1. Concrete cast against and permanently exposed to earth: 4 inches.
2. Concrete exposed to a saltwater environment: 4 inches.

E. Rain Protection: In the event of rain during concrete placement, terminate pour as soon as practicable at a point approved by the Engineer and protect freshly placed concrete with a waterproof covering that will prevent marring or damage of surfaces.

F. Hot Weather Placing: Comply with ACI 305R and as herein specified.

1. Cool ingredients before mixing to maintain concrete temperature at time of placement below 90 degrees F.
2. Fog spray forms, reinforcing steel, and subgrade just before concrete is placed.
3. Use approved water-reducing retarding admixture when required by high temperatures, low humidity, or other adverse placing conditions.

G. Cold Weather Placing: Protect concrete work from physical damage or reduced strength which could be caused by frost, freezing actions, or low temperatures, in compliance with ACI 306R and as herein specified.

1. When air temperature is below 40 degrees F maintain concrete mixture temperature between 50 and 70 degrees. F.
2. Do not use frozen materials or place concrete on frozen subgrade or on

©COPYRIGHT 2016 CH2M HILL

subgrade containing frozen materials.

3. Do not use calcium chloride, salt, or other materials containing antifreeze agents or chemical accelerators.

3.03 FINISH OF FORMED SURFACES

A. Repair of tie holes and deep depressions:

1. Flush with clean water and tamp to overfill with cement drypack mix.
2. Cure as specified for concrete and grind flush with adjacent surface.

B. Repair of Rock Pockets, Honeycomb, and Sand Streaks:

1. Cut and remove concrete to at least one inch deep with sides perpendicular to surface.
2. Flush with clean water, coat with Neat cement paste, and then fill with cement drypack mix in at least two layers to overfill.
3. Cure as specified for concrete and grind smooth and flush with adjacent surfaces.

C. As Cast Finish: For formed concrete surfaces.

1. Repair and patch tie holes and defective areas and rub down or chip off fins and other projections exceeding 1/4 inch in height.
2. Fill and patch bug holes 1/4 inch and larger.
3. Smooth Finish: Saturate the surface with water and rub with a carborundum stone.

D. All exposed edges of concrete shall have a minimum 2 inch chamfer except as shown on the drawings.

3.04 CONCRETE FINISHING – SLABS AND HORIZONTAL EXPOSED SURFACES

A. Finishing Operations:

1. An evaporation retardant film shall be used to help reduce moisture loss at the concrete surface. Requirements for evaporation retarder films are stated in Sub-article 2.3 D.
2. The concrete shall be finished as soon as possible and without delay. The timing of this operation can be extremely critical with high performance low water-cementitious material ratio concrete.
3. Contractor shall maintain adequate surface moisture protection through misting or fog spraying and the application of an evaporation retardant film.
4. The “Evaporation Preventative Procedures” detailed in Sub-article 3.4 C. shall be employed during finishing and until curing begins to

©COPYRIGHT 2016 CH2M HILL

prevent plastic shrinkage cracking.

5. Contractor shall use, as much as possible, the same finishing crew throughout the duration of the project. If through turnover, the Contractor's finishing crews become inadequately experienced, the Contractor shall, with collaboration with the manufacturer's technical
6. representative, train the new finishing crew in the appropriate finishing procedures.
7. Finish concrete per the requirements of ACI 302.1R.
8. Use manual screeds, vibrating screeds, or roller compacing screeds to place concrete level and smooth.
9. Do not use “jitterbugs” or other special tools designed for purpose of forcing coarse aggregate away from surface and allowing layer of mortar, which will be weak and cause cracks or delamination, to accumulate.
10. Do not dust surfaces with dry materials.
11. Round off edges with steel edging tool, except where beveled or chamfered edges are shown. Steel edging tool radius shall be 1/4 inch for slabs subject to wheeled traffic.

B. Slabs – Steel Troweled with Broomed Finish:

1. Finish by screeding and floating with straight edges to bring surfaces to required finish elevation.
2. While concrete is still green, but sufficiently hardened to bear a person’s weight without deep imprint, wood float to true, even plane with no coarse aggregate visible.
3. Use sufficient pressure on wood floats to bring moisture to surface.
4. After surface moisture has disappeared, hand trowel concrete to produce smooth, impervious surface, free from trowel marks.
5. Do not use dry cement or additional water during troweling, nor will excessive troweling be permitted.
6. Finish surface by drawing fine-hair broom lightly across surface.
7. Broom in same direction and parallel to expansion joints, or, in the case of included slabs, perpendicular to slope.

C. Evaporation Preventative Procedures:

1. Evaporation preventative procedures shall require the use of continuous misting or fogging during the casting and finishing of all concrete, until moist curing is initiated. Moist curing shall begin as soon as possible. However, under no circumstances shall it be initiated later than 60 minutes after casting.
2. Immediately after screeding, the evaporation retarder film shall be sprayed onto the concrete surface in accordance with the manufacturer's recommendations. Immediately following the application of the retarder film, the concrete surface shall be floated. Straight edge corrections and

©COPYRIGHT 2016 CH2M HILL

moist curing operations shall be performed expeditiously.

3.05 CURING

A. General:

1. Concrete requires 28-days moist (wet) curing. This 28-day moist curing shall be a combination of 7-days (168 hours) of continuous moist (kept wet) curing and 21-days of continual curing by means of applying a liquid type membrane-forming curing compound. The concrete product shall be protected from construction traffic. No other curing concepts, procedures, or options will be allowed.
2. During the initial 168-hour continuous moist cure, concrete surfaces shall be maintained in a continuously wet condition.

B. Curing Procedures:

1. Curing of concrete shall begin immediately after the finishing operation is completed. Curing duration shall be for a total of 28-days. Curing duration shall be 7-days of continuous moist curing (fresh water) combined with 21-days of additional curing provided by a dual application of a liquid type membrane-forming curing compound to be applied to all surfaces. A film of water shall be kept on the surface by fogging until covering materials are in place. The concrete surface shall not be allowed to dry.
2. Curing covers shall be applied as soon as the concrete surface can be covered without significant marring. Curing covers shall be saturated with potable water immediately upon placement. Minor marring of the surface will be tolerated in order to begin moist curing as soon as possible. Provisions shall be made for additional applications of water under the plastic sheeting. This shall be accomplished by using soaker hoses or other methods approved by the Engineer. Manual application will not be allowed. Water applications shall be either continuous or controlled by automatically timed flow controls. In any event, the concrete surface and burlap material shall remain continuously wet throughout the 7-day curing period.
3. During the 7-day moist curing period, no interruptions to the curing operation will be permitted. Forms shall stay in place for the entire 7-day period. All top horizontal surfaces shall have continuous moist curing without any breaks during the 7-day moist curing period.

C. Liquid Membrane-Forming Curing Compound:

1. Immediately after completion of the 7-day moist curing and the removal of the burlap and plastic covers, an approved liquid membrane-forming curing compound shall be mixed and applied in two independent coats, in opposing directions (90 degrees to each other) to all surfaces in

©COPYRIGHT 2016 CH2M HILL

accordance with the manufacturer's recommendations, subject to the rate of application specified herein.

2. The rate of application of membrane curing compound for each coat shall be at least one gallon to every 200 square feet maximum, for each coat of exposed surface to be cured. Each coat shall be colored differently in order to facilitate application at the prescribed coverage. The top coat shall be colored white. The first coat shall be colored to present a high contrast to the white top coat.
3. Under no circumstances shall the concrete surface be allowed to dry prior to the membrane curing compound application. Deck or

component usage during this 21-day period shall be at a minimum and the use of covered walking paths is required.

D. Penetrating Sealer: After moist 28-day curing process is complete; all exposed concrete surfaces shall be cleaned and coated with a penetrating sealer conforming with Article 2.3.J. Two coats of penetrating sealer shall be applied, at the rate of 125 square feet per gallon and perpendicular to each other, and in accordance to the manufacturer's printed instructions.

E. Protection of Concrete: Concrete shall remain undisturbed during the entire 28-day curing period. The concrete surface shall not be used for storage, traffic or construction area. The concrete may only be used after the 28-day curing period if it is covered with plywood, planks, timbers or other material approved by the engineer.

3.06 CONSTRUCTION JOINTS

A. Construction Joints: Joints not shown on the drawings shall be made and located so as to least impair the strength of the structure and shall be subject to approval of the Engineer. In general, they shall be located near the middle of the spans of slabs, beams and girders unless a beam intersects a girder at this point, in which case the joints in the girders shall be offset a distance equal to twice the width of the beam. Joints shall be perpendicular to the main reinforcement.

B. Reinforcement in Construction Joints: All reinforcing steel shall be continued across joints. Keys and inclined dowels shall be provided as indicated. Longitudinal keys at least 1-1/2 inches deep shall be provided in all joints in walls and between walls and slabs or footings.

C. Preparation of Surface: The surface of the concrete at all joints shall be thoroughly cleaned and all laitance removed.

D. Bonding: Bond shall be obtained by use of an approved bonding agent.

E. Contraction (Expansion) Joints:

©COPYRIGHT 2016 CH2M HILL

1. Locate and install formed contraction joints, as shown on the Contract Drawings and on the accepted reinforcement shop drawings.
2. Provide contraction joints perpendicular to main reinforcement. Terminate all reinforcement at contraction joints, providing the appropriate ACI bent hooks at the ends of all continuous main reinforcement.
3. Provide the open contraction joint width, as shown, with the accepted waterstop between the concrete pours.
4. Fill the contraction joint width with an accepted premolded joint filler material and seal all exposed faces of the joint filler material with an accepted elastomeric sealant.

3.07 EMBEDDED ITEMS

A. Anchors and bolts, frames or edgings, hangers and inserts, pipe supports, pipe sleeves, metal ties, conduits, drains, and all other materials in connection with concrete construction shall, where practicable, be placed and secured in position prior to placing concrete.

B. All sleeves, inserts, anchors, and embedded items required for adjoining Work or for its support shall be placed prior to concreting. All subcontractors, whose work is related to the concrete or must be supported by it, shall be given ample notice and opportunity to introduce or furnish embedded items before the concrete is placed. All ferrous metal sleeves, inserts, anchors, and other embedded ferrous items exposed to the weather or saltwater environment shall be AISI Type 316 stainless steel.

C. Embedded items shall be positioned accurately and supported against displacement. Voids in sleeves, inserts, and anchor slots shall be filled temporarily with readily removable material to prevent the entry of concrete into the voids. Aluminum shall not be embedded in concrete except where aluminum is protected from direct contact with the concrete by a thick coat of Bitumastic paint.

D. Reinforcing bars may be moved as necessary to avoid interference with other reinforcing steel, conduits, or embedded items, but not so as to impair design strengths of the members. If bars are moved more than one bar diameter, the resulting arrangement of bars shall be subject to the approval of the Engineer.

3.08 TREMIE CONCRETE

A. Concrete placed below water shall be by the tremie method. Placement of concrete below the high tide level shall be timed to reduce the amount of concrete placed below water.

B. The tremie pipe shall be watertight and sufficiently large to permit a free flow of concrete. The discharge end shall be kept continuously submerged in fresh

©COPYRIGHT 2016 CH2M HILL

concrete, and the shaft kept full of concrete to a level well above the water surface. The concrete shall be discharged and spread by raising the tremie pipe in a manner to maintain, as nearly as practicable, a uniform flow. The placing of the concrete shall proceed without interruption until the top of the fresh concrete has been brought to the required height.

C. The methods and equipment to be used shall be subject to approval and shall prevent the washing of the cement from the mixture, minimize the formation of laitance, prevent the flow of water through the concrete before it has hardened, and minimize disturbance to the previously placed concrete. Concrete shall not be deposited in running water or in water having a temperature below 35 degrees F.

3.09 DRILLED IN DOWELS

A. Drill holes to depth shown on the drawings. Hole size shall be a maximum of 1/8 inch larger in diameter than the dowel diameter.

B. Clean holes with oil free compressed air and cover with masking tape.

C. The use of rotary drills utilizing diamond core bits is prohibited. Electric impact hammers or other tools which do not provide for the immediate expulsion of the drill cuttings are also prohibited.

D. Fill hole with epoxy adhesive starting at the bottom of the hole until ½ to 2/3 full. Insert dowel or anchor rod to the bottom of the hole and twist. Remove spillage and excess epoxy before it hardens.

3.10 MISCELLANEOUS CONCRETE ITEMS

A. Filling In: Fill in holes and openings left in concrete structures for passage of work by other trades with cement drypack. Mix, place, and cure concrete as specified, to blend with in-place construction.

3.11 FIELD QUALITY CONTROL

A. The Contractor shall employ a testing laboratory to obtain or make samples, to perform tests and to submit test reports, except as designated otherwise. The testing laboratory and its employees shall be qualified in accordance with ASTM E329, and the inspection and testing activities shall be in accordance with ASTM E329.

B. Sampling Fresh Concrete: ASTM C172, except modified for slump to comply with ASTM C94.

1. Slump: ASTM C143; one test at point of discharge for each set of compression cylinders taken; additional tests when concrete consistency

©COPYRIGHT 2016 CH2M HILL

appears to have changed; and one test on each truck load of concrete delivered to the site.

2. Air Content: ASTM C231 pressure method for normal weight concrete; one for each set of compression cylinders taken.
3. Molded Concrete Compression Cylinders: Sample in accordance with to ASTM C172, process and cure in accordance with to ASTM C31, and prepare and test in accordance with to ASTM C39.
   a. Obtain one set of four (4) cylinders for each 50 cu. yd., or fraction thereof, for each day's placement of each mix design.
   b. Test one cylinder at age 3-days or 7-days, as required by job conditions and two (2) cylinders for one valid strength test at 28- days.

   c. Cure and hold fourth cylinder for testing at 42-days if 28-day test indicated deficient results, or as a spare in case of cylinder damage.

C. Manufacturers Field Service: Contractor shall provide and pay for services of a qualified technician(s) employed by the manufacturer(s) of the superplasticizer and flyash admixtures to provide the following:

1. Assist the Contractor in proportioning concrete materials for optimum use.
2. Advise the Contractor on proper use of the admixture.
3. Make adjustments of the concrete mix proportions to meet jobsite and climatic conditions.

D. Reports: Promptly submit four (4) copies of certified written reports of test results, with the following additional data:

1. Time concrete batched and time sampled.
2. Water added at site.
3. Superplasticizer added at site.
4. Strength class.
5. Delivery ticket number.
6. Concrete suppliers mix designation.
7. Location of concrete in the work.

END OF SECTION

©COPYRIGHT 2016 CH2M HILL

©COPYRIGHT 2016 CH2M HILL

SECTION 03 34 00

CEMENTITIOUS FLOWABLE FILL

PART 1 - GENERAL

1.01 SECTION INCLUDES:

A. Ready-mix cementitious flowable fill.

1.02 SUBMITTALS:

A. Product Data: Manufacturers data and application and installation recommendations for admixtures, curing compounds, and others as requested.

B. Mix Designs: 6 copies of each mix design required. Include specific admixture names and proportions for each mix design.

PART 2 - PRODUCTS

2.01 MATERIALS:

A. Portland Cement, ASTM C 150, Type I.

B. Aggregates: ASTM C 33, non-reactive, free of contaminants, gradation which exhibits high flow properties for flowable fill.

C. Admixtures:

1. High Air Generator: ASTM C 260.
2. Flyash: ASTM C 618, Class N, F, or C.
3. Accelerators: ASTM C 494, Type C.

D. Water: Fresh, clean, and potable.

2.02 MIX DESIGN:

A. Provide Class C fast-set excavatable fill with the following characteristics:

1. Compressive Strength: 100 psi min./500 psi max., within 24 hours.
2. Portland Cement: 125 lbs./cu. yd., minimum.
3. Air Stabilizer Admixture: 3 oz./cu. yd.
4. Sand Aggregate: 2,500 lbs./cu. yd.
5. Water: 333 lbs./cu. yd.
6. Accelerator Admixture: 128 oz./cu. yd.

B. Provide pump mix for 4 inch pumps of fast-set flowable fill with the following characteristics:

1. Compressive Strength: 100 psi min./500 psi max., within 24 hours.
2. Portland Cement: 50 lbs./cu. yd., minimum.

©COPYRIGHT 2016 CH2M HILL

3. Flyash: 250 lbs./cu. yd.
4. Air Stabilizer Admixture: 3 oz./cu. yd.
5. Sand Aggregate: 2,300 lbs./cu. yd.
6. Water: 350 lbs./cu. yd.

C. Provide pump mix for 2 inch pumps of fast-set flowable fill with the following characteristics:

1. Compressive Strength: 100 psi min./500 psi max., within 24 hours.
2. Portland Cement: 100 lbs./cu. yd., minimum.
3. Flyash: 300 lbs./cu. yd.
4. Air Stabilizer Admixture: 3 oz./cu. yd.
5. Sand Aggregate: 2,300 lbs./cu. yd.
6. Water: 350 lbs./cu. yd.

D. If the seawater in the void between new and existing bulkhead walls is not fully pumped out, the flowable fill shall be placed by the tremie method. Provide mix with the following charactistics:

1. Compressive Strength: 100 psi min./500 psi max., within 24 hours.
2. Portland Cement: 300 lbs./cu. yd., minimum.
3. Flyash: 300 lbs./cu. yd.
4. Air Stabilizer Admixture: 3 oz./cu. yd.
5. Sand Aggregate: 2,100 lbs./cu. yd.
6. Water: 350 lbs./cu. yd.
7. Admixtures: Vmar 3 at 50 oz/cu. yd., Darafil at 1 bag/cu. yd. (W.R.Grace)

2.03 MIXING:

A. Provide premixed material batched at a concrete plant and hauled to job site in ready-mix trucks with continuous agitating drums.

B. Begin mixing within 30 minutes after cement is added to the mix. Additional water may be added at the batch plant, provided the specified mix design proportions are not exceeded.

PART 3 - EXECUTION

3.01 INSTALLATION:

A. Place flowable fill within 90 minutes of addition of mixing water to cement and aggregates. Deposit fill mixture in its final location before initial set.

B. Deposit in a manner that will require a minimum of rehandling. Work incidental to handling and placing of flowable fill concrete shall be done in a manner that will not damage the underlying surface.

C. Place flowable fill concrete continuously at a uniform rate without unscheduled stops except for equipment failure or other emergencies. Avoid contamination of plastic flowable fill concrete with foreign material on construction equipment or workman's footwear. Flowable fill concrete spread by hand shall be done with shovels and not with rakes.

©COPYRIGHT 2016 CH2M HILL

D. Consolidate immediately after spreading with internal vibrators and vibrating screeds as needed.

E. If seawater is present in the void between the new and existing bulkhead walls, flowable fill shall be placed by the tremie method as outlined in the specification section entitled “Cast-In-Place Concrete.”

3.02 WEATHER PROTECTION:

A. Provide and maintain 50 degrees F minimum flowable fill temperature. Do not place flowable fill concrete when the ambient temperature is below 40 degrees F. Cover flowable fill and provide with a source of heat sufficient to maintain 50 degrees F minimum while curing. Adhere to practices recommended in ACI 306R.

B. Flowable fill temperature from initial mixing through placement shall not exceed 95 degrees F. Cool ingredients before mixing, or substitute chip ice for part of required mixing water or use other suitable means to control flowable fill temperature to prevent rapid drying of newly placed flowable fill concrete. Shade the fresh flowable fill and start curing as soon as the surface is sufficiently hard to permit curing without damage. Adhere to practices recommended in ACI 305R.

3.03 FINISHING:

A. Start screeding operations immediately after consolidation. After screeding is completed but while flowable fill concrete is still plastic, use straightedges to eliminate minor irregularities and score marks.

B. Immediately fill depressions with freshly mixed flowable fill concrete, strike off, consolidate, and refinish. Strike off and refinish projections above required elevation.

C. Continue straightedge testing and finishing until entire surface of flowable fill concrete is free of defects and meets specified requirements.

3.04 CURING AND PROTECTION:

A. Protect flowable fill from injurious action by flowing water, frost, or mechanical injury. At completion of finishing and at the time flowable fill concrete surface has hardened enough to prevent the surface being marred by the curing material, cure by one or more of the following methods. Use fresh water for curing. Keep base moist and at a temperature above 32 degrees F, for a full curing period of 7 days. Protect base from damage during removal of form work and from injury resulting from storage or transportation of materials and equipment during construction.

B. Wet flowable fill surface with a fine spray of water and cover with waterproof paper, polyethylene-coated burlap, or polyethylene sheeting. Thoroughly saturate polyethylene-coated burlap with water before placing.

©COPYRIGHT 2016 CH2M HILL

C. Protect flowable fill surfaces from foot and vehicular traffic and other sources of abrasion for a minimum of 72 hours. Maintain continuity of applied curing method for the entire curing period.

3.05 FIELD QUALITY CONTROL:

A. The Owner will employ a testing laboratory to perform tests and to submit test reports, except as designated otherwise.

B. Sampling Fresh Flowable Fill:

1. Air Content: ASTM D6023.
2. Molded Concrete Compression Cylinders: Sample in accordance with to ASTM D5971, process and cure in accordance with to ASTM C 31, and prepare and test in accordance with to ASTM D4832.

   a. Obtain one set of 4 cylinders for each 50 cu. yd., or fraction thereof, for each day's placement of each mix design.
   b. Test one cylinder at age 24 hours, as required by job conditions, and 2 cylinders for one valid strength test at 7 days.
   c. Cure and hold fourth cylinder for testing at 14 days if 7 day test indicated deficient results, or as a spare in case of cylinder damage.

END OF SECTION

©COPYRIGHT 2016 CH2M HILL

SECTION 03 63 00
CONCRETE DOWELING

PART 1 GENERAL

1.01 REFERENCES

A. The following is a list of standards which may be referenced in this section:

1. American National Standards Institute (ANSI).
2. ASTM International (ASTM): C881/C881M, Standard Specification for Epoxy-Resin-Base Bonding Systems for Concrete.
3. International Conference of Building Officials (ICBO).

1.02 DEFINITIONS

A. ICBO Reports: Published by ICBO for concrete anchor manufacturers.

B. Special Inspection: Observation of Work by Special Inspector for conformance to approved design Drawings and Specifications.

C. Special Inspector: Qualified person who shall demonstrate competence, to satisfaction of building official, for inspection of Work specified within this section.

1.03 SUBMITTALS

A. Action Submittals:

1. Product Data: Manufacturer’s catalog information.

B. Informational Submittals:

1. Manufacturer’s qualifications; include client name, address, contact person, phone number, project location, and description of work.
2. Manufacturer’s instructions for preparation, placement, drilling of holes, installation of anchors and adhesive, and handling of cartridges, nozzles, and equipment.
3. Manufacturer’s written letter of certification identifying installer’s qualifications to install products.
4. ICBO Reports:
   a. Doweling system manufacturer.
   b. Detailed step-by-step instructions for Special Inspection procedure.

©COPYRIGHT 2016 CH2M HILL

5. Special Inspection report.
6. Manufacturer's Certificate of Proper Installation.

1.04 QUALITY ASSURANCE

A. Qualifications:

1. Manufacturer: At least three similar projects with same products within last 3 years.
2. Installer: Trained and certified by manufacturer.

1.05 DELIVERY, STORAGE, AND HANDLING

A. Store adhesive cartridges and adhesive components on pallets or shelving in a covered storage area.

B. Store at temperatures as indicated in manufacturer's literature and ICBO report.

C. Dispose of When:

1. Shelf life has expired.
2. Stored other than per manufacturer's instructions.

D. Container Markings: Include manufacturer's name, product name, batch number, mix ratio by volume, product expiration date, ANSI hazard classification, and appropriate ANSI handling precautions.

PART 2 PRODUCTS

2.01 ADHESIVE

A. Disposable, self-contained cartridge system capable of dispensing both components in the proper mixing ratio and that fit into manually or pneumatically operated caulking gun.

B. Meet requirements of ASTM C881/C881M.

C. Two-component, insensitive to moisture, designed to be installed in adverse freeze/thaw environments.

D. Cure Temperature, Pot Life, and Workability: Compatible for intended use and anticipated environmental conditions.

E. Mixed Adhesive: Nonsag light paste consistency with ability to remain in a 1-inch diameter overhead drilled hole without runout.

©COPYRIGHT 2016 CH2M HILL

F. Manufacturers and Products:

1. Hilti, Inc., Tulsa, OK; HIT Doweling Anchor System, HIT RE-500-SD.

2.02 MIXING NOZZLES

A. Disposable, manufactured in several sizes to accommodate size of reinforcing dowels.

B. Nonremovable internal static mixer required to ensure proper blending of components.

2.03 REINFORCING DOWELS

A. As specified in Section 03 21 00, Concrete Reinforcement.

PART 3 EXECUTION

3.01 GENERAL

A. Dispensing, Metering, and Mixing Adhesive Components: Use portable, automatic metering and mixing device or machine capable of maintaining prescribed mix ratio within deviation of 5 percent or less, by volume.

B. Install in accordance with manufacturer's recommended instructions.

C. Dispense components through specially designed static mixing nozzle that thoroughly mixes components and places mixed adhesive at base of predrilled hole.

3.02 DOWEL SIZING AND INSTALLATION

A. Install per adhesive manufacturer's instructions.

B. Drilling Equipment:

1. Drilling Hammers for Dowel Holes: Electric or pneumatic rotary type with medium or light impact.
2. Hollow drills with flushing air systems are preferred.
3. Where edge distances are less than 2 inches, use lighter impact equipment to prevent microcracking and concrete spalling during drilling process.
4. Drilling equipment shall roughen inside surface of hole per adhesive manufacturer's recommendation. Smooth bore diamond abrasive bits shall not be used.

C. Hole Diameter: Use drill bit diameter meeting ICBO Report requirements and as recommended by the manufacturer.

©COPYRIGHT 2016 CH2M HILL

D. Obstructions in Drill Path:

1. When existing reinforcing steel is encountered during drilling and when approved by Engineer, enlarge hole by 1/8 inch, core through existing reinforcing steel at the larger diameter, and resume drilling at original hole diameter; or redrill hole 1 inch from original location, beginning in same line at surface, redirecting drill to miss reinforcing steel.
2. Place dowels in both the misdrilled hole and the new one.
3. When using epoxy anchors, dowels may be prebent prior to installation to 15 degrees to align with other bars. Do not heat dowels to bend.
4. If bars have fused epoxy coating and coating is damaged, recoat damaged area with epoxy.
5. Bent Bar Dowels: Where edge distances are critical, and striking reinforcing steel is likely, drill hole at 10-degree angle or less and use prebent reinforcing bars.

END OF SECTION

©COPYRIGHT 2016 CH2M HILL

SECTION 05 05 23
WELDING

PART 1 GENERAL

1.01 REFERENCES

A. The following is a list of standards that may be referenced in this section:

1. American Society of Mechanical Engineers (ASME):
   a. BPVC SEC V, Nondestructive Examination.
2. American Society of Nondestructive Testing (ASNT): SNT-TC-1A, Personnel Qualification and Certification in Nondestructive Testing.
3. ASTM International (ASTM): A370, Standard Test Methods and Definitions for Mechanical Testing of Steel Products.
4. American Welding Society (AWS):
   a. A2.4, Standard Symbols for Welding, Brazing, and Nondestructive Examination.
   b. A3.0, Standard Welding Terms and Definitions; Including Terms for Adhesive Bonding, Brazing, Soldering, Thermal Cutting and Thermalspraying.
   c. D1.1/D1.1M, Structural Welding Code - Steel.
   d. D1.4/D1.4M, Structural Welding Code - Reinforcing Steel.
   e. QC1, Standard for AWS Certification of Welding Inspectors.
5. International Code Council, Inc. (ICC):

1.02 DEFINITIONS

A. CJP: Complete Joint Penetration.

B. CWI: Certified Welding Inspector.

C. MT: Magnetic Particle Testing.

D. NDE: Nondestructive Examination.

E. NDT: Nondestructive Testing.

F. PJP: Partial Joint Penetration.

G. PQR: Procedure Qualification Record.

H. PT: Liquid Penetrant Testing.

I. RT: Radiographic Testing.

©COPYRIGHT 2016 CH2M HILL

J. UT: Ultrasonic Testing.

K. VT: Visual Testing.

L. WPQ: Welder/Welding Operator Performance Qualification.

M. WPS: Welding Procedure Specification.

1.03 SUBMITTALS

A. Process in accordance with Section 01 33 00, Submittal Procedures.

B. Action Submittals:

1. Shop Drawings:
   a. Shop and field WPSs and PQRs.
   b. NDT procedure specifications prepared in accordance with ASME BPVC SEC V.
   c. Welding Data (Shop and Field):
      1) Show on Shop Drawings or a weld map complete information regarding base metal specification designation, location, type, size, and extent of welds with reference called out for WPS and NDE numbers in tails of combined welding and NDE symbols as indicated in AWS A2.4.
      2) Distinguish between shop and field welds.
      3) Indicate, by welding symbols or sketches, details of welded joints and preparation of base metal. Provide complete joint welding details showing bevels, groove angles, and root openings for welds.
      4) Welding and NDE symbols shall be in accordance with AWS A2.4.
      5) Welding terms and definitions shall be in accordance with AWS A3.0.
      6) Submit welding data together with shop drawings as a complete package.

C. Informational Submittals:

1. WPQs.
2. CWI credentials.
3. Testing agency personnel credentials.
4. CWI reports.
5. Special Inspector reports.
6. Welding Documentation: Submit on appropriate forms in referenced welding codes.

©COPYRIGHT 2016 CH2M HILL

1.04 QUALIFICATIONS

A. WPSs: In accordance with AWS D1.1/D1.1M (Annex E Forms).

B. WPQs: In accordance with AWS D1.1/D1.1M (Annex E Forms).

C. CWI: Certified Welding Inspectors shall be certified in accordance with AWS QC1, and shall have prior experience with the welding codes specified. Alternate welding inspector qualifications require approval by the Engineer.

D. Testing Agency: Personnel performing tests shall be NDT Level II certified in accordance with ASNT SNT-TC-1A.

E. Special Inspector: A licensed professional engineer, experienced with the design, construction, inspection, and testing of high-strength bolted and welded connections, in accordance with ICC International Building Code, 2006 Ed., Section 1704.3 – Steel Construction, Section 2204.1 – Welding, and Section 2204.2 - Bolting.

1.05 SEQUENCING AND SCHEDULING

A. Unless otherwise specified, all Submittals required in this section shall be submitted and approved prior to commencement of welding operations.

PART 2 PRODUCTS

2.01 SOURCE QUALITY CONTROL

A. Contractor shall retain the services of a qualified engineering testing agency, CWI, and Special Inspector, to provide source and field quality control services.

B. CWI shall be present whenever shop welding is performed. CWI shall perform inspection, as necessary and as directed by the Special Inspector, prior to assembly, during assembly, during welding, and after welding. CWI shall perform inspections as required in AWS D1.1/D1.1M or referenced welding code and as follows:

1. Verifying conformance of specified job material and proper storage.
2. Monitoring conformance with approved WPS.
3. Monitoring conformance of WPQ.
4. Inspecting weld joint fit-up and performing in-process inspection.
5. Providing 100 percent visual inspection of all welds.
6. Supervising nondestructive testing personnel and evaluating test results.
7. Maintaining records and preparing report confirming results of inspection and testing comply with the Work.

©COPYRIGHT 2016 CH2M HILL

C. Special Inspector shall work in conjunction with the CWI and in accordance with ICC-International Building Code, 2006 Ed., Sections 1704.3, 2204.1 and 2204.2

PART 3 EXECUTION

3.01 GENERAL

A. Welding and Fabrication by Welding: Conform to governing welding codes referenced in attached Welding and Nondestructive Testing Table.

B. Welding procedure specifications shall be qualified for notch toughness by limiting heat input; charpy testing of weld metal and heat-affected zone shall be done as a part of the welding procedure qualification. Full-size specimens shall be charpy tested in accordance with ASTM A370 at a test temperature of 30 degF. The minimum average energy of the test coupons shall not be less than 25 foot-pounds.

3.02 NONDESTRUCTIVE WELD TESTING REQUIREMENTS

A. Weld Inspection Criteria:

1. Selection of welds to be tested shall be as agreed upon between the CWI, the Special Inspector, and the Contractor.
2. Unless otherwise specified, perform NDT of welds at a frequency as shown below or in the attached table in accordance with the referenced welding codes as follows. Perform UT on CJP groove welds that cannot be readily radiographed. In case there is a conflict the higher frequency level of NDT shall apply:
   a. CJP Butt Joint Welds: 20 percent random RT.
   b. CJP Groove Welds: 20 percent random UT.
   c. Fillet Welds and PJP Groove Welds: 10 percent random PT or MT.
   d. All Welds: 100 percent VT.
3. Weld Acceptance:
   a. VT:
      1) Structural Pipe and Tubing: AWS D1.1/D1.1M, Paragraph 6.9, Visual Inspection, Tubular Connections.
      2) All Other Structural Steel: AWS D1.1/D1.1M, Paragraph 6.9, Visual Inspection, Statically Loaded Nontubular Connections.
      3) Stud and Deformed Bar Anchor Connections: AWS D1.1/ D1.1M, Paragraph 7.8.

©COPYRIGHT 2016 CH2M HILL

b. UT: Perform UT of CJP groove welds in accordance with AWS D1.1/D1.1M, Paragraph 6.13.3, Class R Indications.
c. RT: Perform RT of CJP butt joint welds in accordance with AWS D1.1/D1.1M, Paragraph 6.12.1.
d. PT or MT:
   1) Perform on fillet and PJP groove welds in accordance with AWS D1.1/D1.1M, Paragraph 6.10.
   2) Acceptance shall be in accordance with VT standards specified above.

3.03 FIELD QUALITY CONTROL

A. Contractor shall retain the services of a qualified engineering testing agency, CWI, and Special Inspector, to provide source and field quality control services.

B. CWI shall be present whenever field welding is performed. CWI shall perform inspection, as necessary and as directed by the Special Inspector, prior to assembly, during assembly, during welding, and after welding. CWI shall perform inspections as required in AWS D1.1/D1.1M or referenced welding code and as follows:

1. Verifying conformance of specified job material and proper storage.
2. Monitoring conformance with approved WPS.
3. Monitoring conformance of WPQ.
4. Inspecting weld joint fit-up and performing in-process inspection.
5. Providing 100 percent visual inspection of all welds.
6. Supervising nondestructive testing personnel and evaluating test results.
7. Maintaining records and preparing report confirming results of inspection and testing comply with the Work.

C. Special Inspector shall work in conjunction with the CWI, in accordance with ICC-International Building Code, 2006 Ed., Sections 1704.3, 2204.1, and 2204.2.

D. Special Inspector's Reports: Submit two (2) signed-and-sealed (embossed) copies of the Special Inspector's Report, including the inspection and test results of each weld inspected and/or tested, to the Owner and the Engineer, in accordance with ICC-International Building Code, 2006 Ed., Sections 1704.3, 2204.1, and 2204.2.

3.04 WELD DEFECT REPAIR

A. Repair and retest rejectable weld defects until sound weld metal has been deposited in accordance with appropriate welding codes.

©COPYRIGHT 2016 CH2M HILL

1. “Welding and Nondestructive Testing” table.

Welding and Nondestructive Testing						
Specification Section	**Governing Welding Codes or Standards**	**Submit WPS**	**Submit WPQ**	**Onsite CWI Req’d**	**Submit Written NDT Procedure Specifica-tions**	**NDT Requirements**
31 41 17 Sheet Piles	AWS D1.1/D1 .1M, Structural Welding Code – Steel	**Yes**	**Yes**	**Yes**	**Yes**	100% VT; see Section 31 41 17 and Paragraph 3.02, herein.
05 50 13 Metal Fabrications (All Metals)	AWS D1.1/ D1.1M, Structural Welding Code–Steel	**Yes**	**Yes**	**Yes**	**Yes**	100% VT; see Section 05 50 13 and Paragraph 3.02, herein.

END OF SECTION

©COPYRIGHT 2016 CH2M HILL

SECTION 05 50 13
METAL FABRICATIONS

PART 1 GENERAL

1.01 SUMMARY

A. Section includes all steel and metal shapes and plates not specified in other sections.

1.02 REFERENCES

A. The following is a list of standards which may be referenced in this section:

1. American Galvanizers Association (AGA): Inspection of Products Hot-Dip Galvanized After Fabrication.
2. American Institute of Steel Construction (AISC): S329, Allowable Stress Design Specification for Structural Joints using ASTM A325 or A490 Bolts.
3. American Iron and Steel Institute (AISI): Stainless Steel Types.
4. American National Standards Institute (ANSI).
5. American Society of Mechanical Engineers (ASME): B1.1, Unified-inch Screw Threads (UN and UNR Thread Form).
6. American Society of Safety Engineers (ASSE): A10.11, Safety Requirements for Personnel and Debris Nets.
7. American Welding Society (AWS):
   a. D1.1, Structural Welding Code - Steel.
   b. D1.6, Structural Welding Code - Stainless Steel.
8. ASTM International (ASTM):
   a. A6, General Requirements for Rolled Steel Plate Shapes, Sheet Piling, and Bars for Structural Use.
   b. A27, Steel Castings, Carbon, for General Application.
   c. A53/A53M, Specification for Pipe, Steel, Black and Hot-Dipped, Zinc-Coated, Welded and Seamless.
   d. A108, Specification for Steel Bars, Carbon, Cold-Finished, Standard Quality.
   e. A123/A123M, Specification for Zinc (Hot-Dip Galvanized) Coatings on Iron and Steel Products.
   f. A143, Practice for Safeguarding Against Embrittlement of Hot-Dip Galvanized Structural Steel Products and Procedure for Detecting Embrittlement.
   g. A153/A153M, Specification for Zinc Coating (Hot-Dip) on Iron and Steel Hardware.
   h. A193/A193M, Specification for Alloy-Steel and Stainless Steel Bolting Materials for High-Temperature Service.

©COPYRIGHT 2016 CH2M HILL

i. A194/A194M, Specification for Carbon and Alloy Steel Nuts for Bolts for High-Pressure or High-Temperature Service, or Both.
j. A240/A240M, Specification for Heat-Resisting Chromium and Chromium-Nickel Stainless Steel Plate, Sheet, and Strip for Pressure Vessels.
k. A276, Specification for Stainless Steel Bars and Shapes.
l. A283/A283M, Specification for Low and Intermediate Tensile Strength Carbon Steel Plates.
m. A325, Specification for Structural Bolts, Steel, Heat Treated 120/105 ksi Minimum Tensile Strength.
n. A380, Practice for Cleaning, Descaling, and Passivation of Stainless Steel Parts, Equipment, and Systems.
o. A384, Practice for Safeguarding Against Warpage and Distortion During Hot-Dip Galvanizing of Steel Assemblies.
p. A385, Practice for Providing High-Quality Zinc Coatings (Hot-Dip).
q. A489, Specification for Carbon Steel Lifting Eyes.
r. A496, Steel Wire, Deformed, for Concrete Reinforcement.
s. A500, Specification for Cold-Formed Welded and Seamless Carbon Steel Structural Tubing in Rounds and Shapes.
t. A501, Specification for Hot-Formed Welded and Seamless Carbon Steel Structural Tubing.
u. A563, Specification for Carbon and Alloy Steel Nuts.
v. A572, High Strength, Low Alloy Columbium-Vanadium Steels of Structural Quality.
w. A780, Practice for Repair of Damaged and Uncoated Areas of Hot-Dip Galvanized Coatings.
x. A786/A786M, Specification for Hot-Rolled Carbon, Low-Alloy, High-Strength Low-Alloy, and Alloy Steel Floor Plates.
y. A793, Specification for Rolled Floor Plate, Stainless Steel.
z. A967, Specification for Chemical Passivation Treatments for Stainless Steel Parts.
aa. A992/A992M, Specification for Steel for Structural Shapes for Use in Building Framing
bb. F436, Specification for Hardened Steel Washers.
cc. F593, Specification for Stainless Steel Bolts, Hex Cap Screws, and Studs.
dd. F594, Specification for Stainless Steel Nuts.
ee. F1554, Specification for Anchor Bolts, Steel, 36, 55, and 105-ksi Yield Strength.

9. International Code Council, Inc. (ICC):
   a. Evaluation Reports for Concrete and Masonry Anchors.

©COPYRIGHT 2016 CH2M HILL

1.03 DEFINITIONS

A. Corrosive Area: Location at or below top of bulkhead cap or under water.

B. Exterior Area: Location not protected from the weather by an enclosed structure.

C. Submerged: Location at or below EL -1.0 MSL.

1.04 SUBMITTALS

A. Process in accordance with Section 01 33 00, Submittal Procedures.

B. Action Submittals:

1. Shop Drawings:
   a. Metal fabrications, including welding and fastener information.
   b. Specific instructions for concrete anchor installation, including drilled hole size, preparation, placement, procedures, and instructions for safe handling of anchoring systems.
   c. Anchor bolts, cast-in-place and drilled-in.
   d. Specific instructions for concrete anchor installation, including drilled hole size, preparation, placement, procedures, and instructions for safe handling of anchoring systems.
   e. Welding Data (Shop and Field), in accordance with Section 05 05 23, Welding.

C. Informational Submittals:

1. Concrete Drilled Adhesive Anchors:
   a. Manufacturer’s product description and installation procedures.
   b. Current test data or ICC Evaluation Report.
   c. Adhesive Anchor Installer Certification.
2. Hot-Dip Galvanizing: Certificate of compliance signed by galvanizer, with description of material processed and ASTM standard used for coating.
3. Welded Deformed Bar Anchors:
   a. Manufacturer’s product data.
   b. Manufacturer’s certification that material was manufactured, sampled, tested, and inspected in accordance with ASTM A496, and found to meet or exceed the requirements specified therein.
   c. Manufacturer’s certified test report of the testing results.
4. Welding documentation, CWI and testing agency credentials, and CWI and Special Inspector reports in accordance with Section 05 05 23, Welding.

1.05 QUALITY ASSURANCE

A. Qualifications:

©COPYRIGHT 2016 CH2M HILL

1. Adhesive Anchor Installers: Trained and certified by manufacturer.
2. Galvanized Coating Applicator: Company specializing in hot-dip galvanizing after fabrication and following procedures of Quality Assurance Manual of the American Galvanizers Association.
3. Welders, Welding Operators, Welding Inspectors, and Welding Procedures: Refer to Section 05 05 23, Welding.

B. Contractor's Special Inspector: A licensed professional engineer, experienced with the design, construction, inspection, and testing of high-strength bolted and welded connections, in accordance with ICC-International Building Code, 2006 Ed., Section 1704.3 – Steel Construction, Section 2204.1 – Welding, and Section 2202.2 – Bolting.

1.06 DELIVERY, STORAGE, AND HANDLING

A. Insofar as practical, factory assemble items specified herein. Assemblies that due to necessity have to be shipped unassembled shall be packaged and tagged in manner that will protect materials from damage and will facilitate identification and field assembly.

B. Package stainless steel items in a manner to provide protection from carbon impregnation.

C. Protect painted coatings and hot-dip galvanized finishes from damage due to metal banding and rough handling. Use padded slings and straps.

D. Store fabricated items in dry area, not in direct contact with ground.

PART 2 PRODUCTS

2.01 GENERAL

A. For hot-dip galvanized steel that is exposed to view and does not receive paint, limit the combined phosphorus and silicon content to 0.04 percent. For steels that require a minimum of 0.15 percent silicon (such as plates over 1.5 inches thick), limit the maximum silicon content to 0.21 percent and the phosphorous content to 0.03 percent.

B. Unless otherwise indicated, meet the following requirements: (Note: Steel Sheet pile shall be per Section 31 41 17, SSP Bulkhead.)

Item	ASTM Reference
Steel Shapes and Plates	A6, A572, Grade 50 or A992, Grade 50
Steel Pipe	ASTM A572, Grade 50

©COPYRIGHT 2016 CH2M HILL

Item	ASTM Reference
Structural Steel Tubing	A6, A500, Grade B
Stainless Steel:	
Bars and Angles	A276, AISI Type 316 (316L for welded connections)
Shapes	A276, AISI Type 304 (304L for welded connections)
Steel Plate, Sheet, and Strip	A240/A240M, AISI Type 316 (316L for welded connections)
Bolts, Threaded Rods, Anchor Bolts, and Anchor Studs (not used as tie rods)	F593, AISI Type 316, Condition CW
Nuts	F594, AISI Type 316, Condition CW
Steel Bolts and Nuts:	
High-Strength	A325, Type 1 bolts, with A563 nuts
Anchor Bolts	F1554, Grade 55, with weldability Supplement S1
Flat and Beveled Washers (Hardened)	F436
Welded Anchor Studs	A108, Grades C-1010 through C-1020
Welded Deformed Bar Anchors	A496, 70,000 psi yield strength
Cast Steel Deck Fittings	A27, Grade 65/35
Steel Sheet Piles	See Section 31 41 17

2.02 ANCHOR BOLTS

A. Cast-in-Place Anchor Bolts:

1. Headed type, unless otherwise shown on Drawings.
2. Material type and protective coating as shown or specified.

2.03 CONCRETE DRILLED ANCHORS

A. General:

©COPYRIGHT 2016 CH2M HILL

1. AISI Type 316 stainless or hot-dip galvanized, as shown in Fastener Schedule at end of this section.
2. Current evaluation and acceptance reports by ICC (Report #ESR-2322 and ICC-ES Acceptance Criteria AC 308), or other similar code organization.

B. Adhesive Anchors:

1. Threaded Rod:
   a. ASTM F593 stainless steel threaded rod, diameter as shown on Drawings.
   b. Length as required, to provide minimum depth of embedment.
   c. Clean and free of grease, oil, or other deleterious material.
2. Adhesive:
   a. Two-component, designed to be used in adverse freeze/thaw environments, with gray color after mixing.
   b. Cure Temperature, Pot Life, and Workability: Compatible for intended use and environmental conditions.
   c. Nonsag, with selected viscosity base on installation temperature and overhead application where applicable.
3. Packaging and Storage:
   a. Disposable, self-contained cartridge system capable of dispensing both components in the proper mixing ratio and fitting into a manually or pneumatically operated caulking gun.
   b. Store adhesive cartridges on pallets or shelving in covered storage area, in accordance with manufacturer's written instructions.
   c. Cartridge Markings: Include manufacturer's name, product name, material type, batch or serial number, and adhesive expiration date.
   d. Dispose of cartridges if shelf life has expired.
4. Approved Manufacturer and Product:
   a. Hilti, Inc., Tulsa, OK; HIT RE 500-SD Adhesive Anchor System.
   b. Or Engineer-approved equal.

2.04 SOURCE QUALITY CONTROL

A. Contractor shall retain the services of a qualified engineering testing agency, CWI, and Special Inspector, to provide source and field quality control services, in accordance with Section 05 05 13, Welding.

B. Visually inspect all fabrication welds and correct any deficiencies.

1. Steel: AWS D1.1, Section 6 and Table 6.1, Visual Inspection Acceptance Criteria.
2. Stainless Steel: AWS D1.6.

©COPYRIGHT 2016 CH2M HILL

C. Hot-Dip Galvanizing:

1. An independent testing agency will be retained by Contractor to inspect and test hot-dip galvanized fabricated items in accordance with ASTM A123 and ASTM A153.
2. Visually inspect and test for thickness and adhesion of zinc coating for minimum of three test samples from each lot in accordance with ASTM A123 and ASTM A153.
3. Reject and retest nonconforming articles in accordance with ASTM A123 and ASTM A153.

D. Contractors Inspector shall work in conjunction with the CWI, and in accordance with ICC-International Building Code, Sections 1704.3, 2204.1, and 2204.2.

2.05 FABRICATION

A. General:

1. Finish exposed surfaces smooth, sharp, and to well-defined lines.
2. Furnish necessary rabbets, lugs, and brackets so work can be assembled in neat, substantial manner.
3. Conceal fastenings where practical; where exposed, flush countersink.
4. Drill metalwork and countersink holes as required for attaching hardware or other materials.
5. Grind cut edges smooth and straight. Round sharp edges to small uniform radius. Grind burrs, jagged edges, and surface defects smooth.
6. Fit and assemble in largest practical sections for delivery to Site.

B. Materials:

1. Use steel shapes, unless otherwise noted.
2. Steel to be hot-dip galvanized: Limit silicon content to less than 0.04 percent or to between 0.15 and 0.25 percent.

C. Welding:

1. Welding shall be in accordance with Section 05 05 23, Welding.
2. Weld connections and grind exposed welds smooth. When required to be watertight, make welds continuous.
3. Welded fabrications shall be free from twisting or distortion caused by improper welding techniques.
4. Steel: Meet fabrication requirements of AWS D1.1, Section 5.
5. Aluminum: Meet requirements of AWS D1.2.
6. Stainless Steel: Meet requirements of AWS D1.6.

©COPYRIGHT 2016 CH2M HILL

7. Welded Anchor Studs and Deformed Bar Anchors: Prepare surface to be welded and weld with stud welding gun in accordance with AWS D1.1, Section 7, and manufacturer's instructions.
8. Complete welding before applying finish.

D. Painting:

1. Shop prime with rust-inhibitive primer as specified, unless otherwise indicated.
2. Coat surfaces of galvanized steel and aluminum fabricated items to be in direct contact with concrete, grout, masonry, or dissimilar metals, as specified, unless indicated otherwise.
3. Do not apply protective coating to galvanized steel anchor bolts or galvanized steel welded anchor studs, unless indicated otherwise.

E. Galvanizing:

1. Fabricate steel to be galvanized in accordance with ASTM A143, ASTM A384, and ASTM A385. Avoid fabrication techniques that could cause distortion or embrittlement of the steel.
2. Provide venting and drain holes for tubular members and fabricated assemblies in accordance with ASTM A385.
3. Remove welding slag, splatter, burrs, grease, oil, paint, lacquer, and other deleterious material prior to delivery for galvanizing.
4. Remove by blast cleaning or other methods surface contaminants and coatings not removable by normal chemical cleaning process in the galvanizing operation.
5. Hot-dip galvanize steel members, fabrications, and assemblies after fabrication in accordance with ASTM A123/A123M.
6. Hot-dip galvanize bolts, nuts, washers, and hardware components in accordance with ASTM A153/A153M. Oversize holes to allow for zinc alloy growth. Shop assemble bolts and nuts.
7. Galvanize components of bolted assemblies separately before assembly. Galvanizing of tapped holes is not required.

PART 3 EXECUTION

3.01 INSTALLATION OF METAL FABRICATIONS

A. Install metal fabrications plumb or level, accurately fitted, free from distortion or defects.

B. Install rigid, substantial, and neat in appearance.

C. Install manufactured products in accordance with manufacturer's recommendations.

©COPYRIGHT 2016 CH2M HILL

D. Obtain Engineer approval prior to field cutting steel members or making adjustments not scheduled.

3.02 CONCRETE DRILLED ANCHORS

A. Begin installation only after concrete to receive anchors has attained design strength.

B. Install in accordance with manufacturer's instructions.

C. Provide minimum embedment, edge distance, and spacing as follows, unless indicated otherwise by anchor manufacturer's instructions or shown otherwise on Drawings:

Anchor Type	**Min. Embedment (bolt diameters)**	**Min. Edge Distance (bolt diameters)**	**Min. Spacing (bolt diameters)**
Adhesive	12	9	13.5

D. Use only drill type and bit type and diameter recommended by anchor manufacturer. Clean hole of debris and dust with brush and compressed air.

E. For undercut anchors, use special undercutting drill bit and rotary hammer drill and apply final torque as recommended by anchor manufacturer.

F. When embedded steel or rebar is encountered in the drill path, slant drill to clear obstruction. If drill must be slanted more than 10 degrees to clear obstruction, notify Engineer for direction on how to proceed.

G. Adhesive Anchors:

1. Do not install adhesive anchors when temperature of concrete is below 40 degF or above 100 degF.
2. Remove any standing water from hole with oil-free compressed air. Inside surface of hole shall be dry where required by manufacturer's instructions.
3. Do not disturb anchor during recommended curing time.
4. Do not exceed maximum torque as specified in manufacturer's instructions.

H. Drilled-in adhesive anchor installations shall be subject to periodic special inspections, by Contractor retained Special Inspector Services, in conformance with ICC-ES Report #ESR-2322, latest issue, and ICC-ES Acceptance Criteria AC308.

3.03 ELECTROLYTIC PROTECTION

A. Galvanized Steel:

©COPYRIGHT 2016 CH2M HILL

1. Coat surfaces of galvanized steel fabricated items to be in direct contact with concrete, grout, masonry, or dissimilar metals, as specified in Section 09 97 13, Coating of Steel Waterfront Structures, unless indicated otherwise.
2. Do not apply protective coating to galvanized steel anchor bolts or galvanized steel welded anchor studs, unless indicated otherwise.
3. Allow coating to dry before installation of the material.
4. Protect coated surfaces during installation.
5. Should coating become marred, prepare and touch up in accordance with paint manufacturer's written instructions.

B. Stainless Steel:

1. During handling and installation, take necessary precautions to prevent carbon impregnation of stainless steel members.
2. After installation, visually inspect stainless steel surfaces for evidence of iron rust, oil, paint, and other forms of contamination.
3. Remove contamination in accordance with requirements of ASTM A380 and ASTM A967.
4. Brushes used to remove foreign substances shall utilize only stainless steel or nonmetallic bristles.
5. After treatment, visually inspect surfaces for compliance.

3.04 PAINTING AND REPAIR OF GALVANIZED STEEL

A. Painted Galvanized Surfaces: Not required.

B. Repair of Damaged Hot-Dip Galvanized Coating:

1. Conform to ASTM A780.
2. For minor repairs at abraded areas, use sprayed zinc conforming to ASTM A780.
3. For flame cut or welded areas, use zinc-based solder, or zinc sticks, conforming to ASTM A780.
4. Use magnetic gauge to determine that thickness is equal to or greater than the base galvanized coating.

3.05 FIELD QUALITY CONTROL

A. Contractor shall retain the services of a qualified engineering testing agency, CWI, and Special Inspector, to provide source and field quality control services, in accordance with Section 05 05 13, Welding.

©COPYRIGHT 2016 CH2M HILL

3.06 MANUFACTURER'S SERVICES

A. Adhesive Anchors: Conduct site training of installation personnel for proper installation, handling, and storage of adhesive anchor system. Notify Engineer of time and place for sessions.

3.07 FASTENER SCHEDULE

A. Unless indicated otherwise on the Drawings, provide fasteners as follows:

Service Use and Location	**Product**	**Remarks**
1. Anchor Bolts Cast Into Concrete for Metal Fabrications and Castings		
Exterior Wet Areas	Hot-dip galvanized headed anchor bolts.	
Submerged and Corrosive Areas	Stainless steel headed anchor bolts	
2. Anchor Bolts Cast Into Concrete for Fenders		
Submerged, Exterior, Wet, and Corrosive Areas	Stainless steel headed anchor bolts and U-bolts	
3. Drilled Anchors for Metal Components to Cast-in-Place Concrete		
Submerged, Exterior, Wet, and Corrosive Areas	Adhesive stainless steel anchors	
4. All Others		
Exterior Wet and Dry Areas	Stainless steel fasteners	

B. Antiseizing Lubricant: Use on all stainless steel threads.

END OF SECTION

©COPYRIGHT 2016 CH2M HILL

©COPYRIGHT 2016 CH2M HILL

SECTION 09 96 00

TWO COMPONENT EPOXY COATING SYSTEM

PART 1 - GENERAL

1.01 SCOPE: Provide a three coat system consisting of a single component aromatic polyurethane zinc rich primer and two component polyamidoamine epoxy coating system (Epoxy resins and Amine Hardener) for steel surfaces as shown and specified herein.

1.02 APPLICABLE PUBLICATIONS: The publications listed below form a part of this specification to the extent referenced. The publications are referred to in the text by the basic designation only.

A. Steel Structures Painting Council (SSPC) Publications:

SSPC-PA1	Shop, Field & Maintenance Painting
SSPC-SP10	Near-White Blast Cleaning
SSPC-SP11	Power Tool Cleaning to Bare Metal

1.03 MANUFACTURER'S CERTIFICATES OF CONFORMANCE OR COMPLIANCE: Submit certificates of conformance or compliance certifying that materials, surface preparation, coverage, and thickness, meet the requirements specified.

1.04 SUBMITTALS:

A. Make submittals in accordance with the Section 01 11 16.

B. Submit certificates of conformance or compliance certifying that materials, surface preparation, coverage, and thickness meet the requirements specified.

C. Submit certified copies of the reports of all tests required in the referenced standard specifications. Tests shall have been performed within three years of the date of submittal. Test reports shall be accompanied by notarized certificates from the system manufacturer and installer certifying that the tested material and equipment is the same type, quality, manufacture, and make as that proposed to be supplied.

D. Submit on-site cleaning and coating procedures as part of the Environmental Protection Plan as specified in Section 01 35 43.

1.05 HANDLING COATED MATERIAL:

A. Store, handle, and place coated material with care and in a manner that will minimize damage to coating and will not reduce its effective protective value.

©COPYRIGHT 2016 CH2M HILL

Rough sawn timber dunnage shall not be used.

B. Repair damaged surfaces as directed by the coating manufacturer's technical representative. See Paragraph 3.06 for field touch up.

C. Handle coated work which is flexible in a manner that will prevent flexing sufficient to crack coating, especially when temperature is below 40 degrees F.

D. Do not place protected surfaces on strips or skids until coating has hardened thoroughly. Contractor shall verify time needed for hardening with coating manufacturer's technical representative. Use wide fabric slings in lifting, and strips, slings, blocks, skids, cradles, and other supports shall provide ample smooth bearing areas.

E. In transporting, fasten and protect coated materials in a manner that will prevent movement and preclude chafing and rubbing, and when unloaded, do not dump or drop.

F. Place protected material in position carefully on suitably prepared beds and with a minimum of handling.

1.06 CONTRACTOR QUALIFICATIONS: Minimum five years experience with applying similar products. Submit documentation demonstrating compliance with this requirement.

1.07 LEVEL OF QUALITY: The following product and manufacturer is listed as a standard of quality. Substitution of a different coating system may be requested in accordance with the General Requirements of the Contract Documents. The substitute coating system shall meet or exceed all the specifications herein and shall be submitted in accordance with Section 01 33 00. The Contractor shall note that the following product and manufacturer are still subject to the submittal and test requirements specified herein.

A. Tnemec Company, Inc. (Florida Representative: Florida Protective Coatings Consultants, Inc. 407-322-1243)

1.08 ON-SITE CLEANING AND COATING PROCEDURES: Cleaning and coating on-site procedures shall be prohibited except for minor field touch up. Contractor shall protect adjacent surfaces from spent abrasive, cleaning residue, overspray, and splatter and shall not allow these items to fall into the water or be absorbed into the soil. Proposed methods, procedures, and equipment for minor touch up work shall be submitted with the Environmental Protection Plan as specified in Section 01 35 43.

©COPYRIGHT 2016 CH2M HILL

PART 2 - PRODUCTS

2.01 MATERIALS:

A. Shall conform to specifications and other requirements specified. Use coatings in conjunction with each other which are compatible products of the same formulator (manufacturer) of the coating system.

B. Primer: Tneme-Zinc 90G-1K97, Aromatic Urethane, Zinc-Rich

C. Intermediate and Top coat: Tnemec Series N69, Hi-Build Epoxoline II

D. All paint shall be prepared at the factory ready for application. The addition of thinner or other material to the paint after the paint has been shipped shall not be permitted, except as recommended by the manufacturer and by permission of the manufacturer's technical representative. Use only the manufacturer’s listed thinner. Contractor shall furnish paint manufacturer's certification that the paint complies with paint system requirements specified.

E. Application of paint will not be permitted until the certification has been received by the Engineer and the paint has been approved by the Engineer.

F. Tinting: All tinting materials required shall be added to the paint at the time of paint manufacturer. Field tinting shall not be allowed. Alternating colors to define each coat shall be used.

G. All containers shall be labeled showing the exact title of the paint, the manufacturer's name, date of manufacturer, the manufacturer's batch number and the specification number and lot number if appropriate. Precautions concerning the handling and application of paint shall be shown on the label of paint and solvent containers.

PART 3 - EXECUTION

3.01 CLEANING AND PREPARATION OF SURFACES:

H. All surfaces to be coated shall be abrasive blasted in accordance with SSPC SP-10 and the appearance of the blast cleaned surfaces shall approximate Visual Standard SP10 of SSPC VIS 1-89. Blast cleaning shall be performed using abrasive of a size which will produce a surface profile height of 1.5 mils minimum.

©COPYRIGHT 2016 CH2M HILL

B. After blasting, dust and spent abrasive shall be removed from the surfaces by air, vacuum cleaning or brushing with clean brushes made of fibre or bristle. Cleaning shall be approved by the coating manufacturer's technical representative.

3.02 METHODS OF APPLICATION AND WORKMANSHIP:

A. All painting to be performed under this contract shall be performed in conformance with the best practices of the trade, in conformance with recommendations of the coating manufacturer, and in conformance with applicable portions of the Steel Painting Council Specification SSPC-PA 1, when those specifications are not in conflict with these specifications.

B. All surfaces cleaned to bare metal shall be coated with the primer the same working day and before any rust bloom occurs. Any cleaned surface which rusts before the application of the prime coat shall be re-cleaned.

C. Paint film thickness measurements will be made by the manufacturer's technical representative after application of top coat. A visual inspection for complete coverage will be made after the intermediate coat. One hundred percent of all thickness measurements shall be within the specified minimum dry film thickness. Where thickness measurements fall below the specified minimum, additional applications of paint shall be made as necessary to meet the thickness required. Manufacturer specified recoat times shall be strictly followed.

D. Specified time shall elapse between successive coats to permit them to dry properly for recoating. Paint shall be considered dry for recoating when it feels firm, does not deform or feel sticky under moderate pressure of the finger, and the application of another coat of paint does not cause such film irregularities as lifting or loss of adhesion to the undercoat. Consult with coating manufacturer regarding specific recoat information.

E. The surface of the paint being covered shall be thoroughly dry and free of moisture, dust, grease, or any other substance which would prevent the bond of succeeding applications. Abrasive blast cleaning shall not be permitted in areas adjacent to areas that are in the process of being painted. Freshly painted surfaces shall be protected by the Contractor from contamination by dust or foreign materials from any source. Contaminated surfaces shall be cleaned to the satisfaction of the manufacturer's technical representative before any succeeding application of paint is made.

©COPYRIGHT 2016 CH2M HILL

3.03 COATING THICKNESSES:

A. Primer: One coat, 2.5 to 3.5 mils DFT

B. Strip Coat on steel sheet pile edges, excluding the inside of the interlocks: Tnemec Series N69, one coat, 3.0 to 5.0 mils DFT

C. Intermediate and Top Coat: Apply two coats, 6.0 to 8.0 mils DFT per coat.
1. Intermediate color: Series N69-1211.
2. Finish color: Series N69-35GR Black.
3. Where white is specified: Series N69-00WH

D. Minimum film thickness for the 3 coat system shall be 15.0 mils DFT.

3.04 SURFACES TO BE COATED:

A. Bollards, pipe piles and hardware:
1. Clean to SSPC-SP10 and give protective coating to all surfaces to the elevations shown on the contract drawings.
2. Color: Black

B. Pipe and Flange Assembly Including Hardware:
1. Clean to SSPC-SP11 and give protective coating to all surfaces as shown on the contract drawings.
2. Color: Black

3.05 FIELD TESTS AND INSPECTIONS:

A. Contractor shall provide and pay for the services of a qualified technical representative agreed upon by the manufacturer of the coating system who shall:
1. Observe and approve the contractor's surface preparation and coating system application techniques.
2. Test for thickness, holidays, and pin holes on random samples.
3. Provide a written summary of the Contractor's final coating product and it's expected performance in a marine environment.

B. Test for Thickness, Holidays, and Pin Holes: Measure thicknesses by commercial film thickness gages. Test coatings for pin holes, holidays, and other defects with a low voltage sponge testor when visual inspection shows that coating continuity is doubtful. Where detection of pin holes, holidays and other defects is noted, contractor shall repair areas in a manner in accordance with the manufacturer's technical representative's directions.

©COPYRIGHT 2016 CH2M HILL

3.06 FIELD TOUCH UP:

A. Power tool clean to SSPC-SP11 and immediately apply primer, Tnemec Series 1 Omnithane, 1 coat, 3 mils DFT. Apply top coats in accordance with Paragraph 3.30C and the coating manufacturer's printed instructions after cleaning the primed surface of all salt contamination.

B. Remove all salt contamination by the use of Chlor-Rid or equal prior to surface preparation and application of each coat.

END OF SECTION

©COPYRIGHT 2016 CH2M HILL

SECTION 09 97 13
COATING OF STEEL WATERFRONT STRUCTURES

PART 1 GENERAL

1.01 REFERENCES

A. The publications listed below form a part of this specification to the extent referenced. The publications are referred to within the text by the basic designation only.

1. ASTM International (ASTM):
   a. ASTM D 7091, (2005) Standard Practice for Nondestructive Measurement of Dry Film Thickness of Nonmagnetic Coatings Applied to Ferrous Metals and Nonmagnetic, Nondestructive Coatings Applied to Non-Ferrous Metals.
   b. ASTM E 376, (2006) Measuring Coating Thickness by Magnetic-Field or Eddy-Current (Electromagnetic) Test Methods.
2. The Society For Protective Coatings (SSPC):
   a. SSPC PS 11.01, (1982; E 2004) Black (or Dark Red) Coal Tar Epoxy Polyamide Painting System.
   b. SSPC Paint 16, (2006) Coal Tar Epoxy-Polyamide Black (or Dark Red) Paint.
   c. SSPC SP 1, (1982; E 2004) Solvent Cleaning.
   d. SSPC SP 10/NACE No. 2, (2007) Near-White Blast Cleaning.

1.02 SUBMITTALS

A. Approval is required for submittals, prior to commencement of construction. The following shall be submitted in accordance with Section 01 33 00, Submittal Procedures:

1. Certificates
   a. Coal tar epoxy-polyamide coating system.
2. Coating Inspector Qualifications
   a. Resume providing detailed description of inspector's educational and work history.
   b. Licenses and/or certificates.
   c. Certified statement from the specific coating system manufacturer that is providing the coal tar epoxy-polyamide coating system materials for this project, stating the Contractor's proposed Coating Inspector is acceptable to the manufacturer.

©COPYRIGHT 2016 CH2M HILL

1.03 ENVIRONMENTAL CONDITIONS

A. Start work only when ambient and curing temperatures are within limits of coating manufacturer's recommendations and at least 5 degrees F above dew point temperature.

1.04 SAFETY AND HEALTH PRECAUTIONS

A. Materials listed in this section contain coal tar pitch volatiles, which are toxic. Follow safety procedures as recommended by manufacturer. Work in a well ventilated area. Provide, and require workers to use, impervious clothing, gloves, face shields (8 inch minimum), and other appropriate protective clothing necessary to prevent eye and skin contact with coating materials. Keep coatings away from heat, sparks and flame.

1.05 HANDLING OF COATED MATERIAL

A. Coating material shall be handled carefully with slings that will not mar the coating. All areas marred in handling, shipping, and at lay-down area shall be recoated as soon as possible after they are discovered, using the techniques set out in this specification and as recommended by the coating supplier.

B. Coated pieces shall be shipped and stored with padded dunnage separating pieces and with pads under tie down chains or straps.

C. No markings shall be made on members with lead based paints, grease crayon or other material that is incompatible with the coating. If marking is necessary, use a coal-tar enamel or stamp markings.

D. Surfaces coated with coal-tar epoxy shall not be immersed in water until the coating has cured for at least 72 hours. Piling coated with coal-tar epoxy shall not be driven until the coating has cured for at least one week.

1.06 QUALITY ASSURANCE

A. Coating System Inspector

1. Contractor shall retain the services of an experienced and qualified coating system inspector, with specific experience and knowledge of the required surface preparation, the required coating procedures, mixing, and the required coating application processes for the coat tar epoxy-polyamide coating system specified herein.

2. Coating System Inspector shall be on-site at the coating facility at all times steel items for this specific project are being prepared or coated. The Inspector shall provide visual inspection and NDT of coating thickness.

©COPYRIGHT 2016 CH2M HILL

3. Coat System Inspector shall be responsible for approving all surface preparation tasks and that the specified near white blast finish and surface profile is provided, prior to allowing the coating to be applied. Inspector shall sign-off on each and that lot of steel product's surface preparation.
4. Coating System Inspector shall observe and check the coating mixing procedures, to insure the coating system mixture complies with the coating system manufacturer's specifications, prior to allowing the coating to be applied. Inspector shall sign-off on each batch of coating mix.
5. Coating System Inspector shall observe the complete three-coat application of the coal tar epoxy-polyamide coating system, making sure the correct temperature limits are met, the application of the coating is proper and complete, and the dry film thickness of each of the three coats meets or exceed the specified minimum DFT thicknesses.

PART 2 PRODUCTS

2.01 COATING SYSTEMS

A. Coating: Provide catalyst components for coatings specific for resin components. Use thinners which are compatible with the coating.

1. Coal Tar Epoxy-Polyamide:
   a. System: SSPC PS 11.01.
   b. Paints: SSPC Paint 16 Black (second coat) and Dark Red (first coat).

B. Approved Products and Manufacturer.

1. Coal Tar Epoxy-Polyamide: High build, polyamide epoxy coal-tar coating system, with a minimum weight of solids of 82 percent, plus-or-minus 2 percent, mixed. Provide catalyst components for coatings specific for resin components. Use thinners which are compatible with the coating. "TARGUARD, Coal Tar Epoxy", as manufactured by Sherwin Williams is an approved product.

2. Epoxy Polyamide Primer: Specifically formulated for immersion service under immersion grade epoxies and polyurea, with a minimum weight of solids of 85 percent, plus-or-minus 2 percent, mixed. "COPOXY Shop Primer", as manufactured by Sherwin Williams is an approved product.

PART 3 EXECUTION

3.01 CLEANING AND PREPARATION OF SURFACES

A. Solvent Cleaning: SSPC SP 1. Remove visible oil, grease, and drawing and cutting compounds by solvent cleaning.

©COPYRIGHT 2016 CH2M HILL

B. Blast Cleaning: SSPC SP 10/NACE No. 2. After solvent cleaning, complete surface preparation by near-white blast cleaning. Remove residual dust from blasted surface by blowing with dry, oil-free air, vacuuming, or sweeping. Provide surface profile of at least 2 1/2-mil thickness.

3.02 PROPORTIONING AND MIXING OF COATING SYSTEM

A. Proportioning of Coal Tar Epoxy-Polyamide System: Coal tar epoxy-polyamide consists of a two-component system. Component A contains a refined coal tar pitch, polyamide resin, and a polyamine promoter to accelerate curing rate. Component B is an epoxy resin. Mix both components in a ratio of 4 parts of Component A to 1 part of Component B by volume.

B. Thinning: Do not thin coatings when doing so will result in total volatile organic compounds exceeding limits enacted by local air pollution control districts. When thinning is allowed and is necessary for proper application, use xylene or the coating manufacturer's recommended thinner, to a maximum of 1/2 gallon to a 5-gallon batch.

C. Mixing of Coal Tar Epoxy-Polyamide System: Power stir components to a smooth, uniform consistency. Stir coating periodically during induction period. Follow coating manufacturer's requirements for induction time and pot life of mixed batches.

3.03 COATING SYSTEM APPLICATION

A. Apply epoxy polyamide primer coating to dry surfaces not more than 4 hours after near-white blast cleaning. Apply one coat at the rate of 3.0 to 5.0 mils DFT, so that finished surfaces are free from runs, sags, brush marks and variations in color.

B. Apply two coats of coal tar epoxy-polyamide at a dry film thickness of not less than 8.0 to 12.0 mils DFT each coat. First coat shall be red and second coat shall be black. Provide a total coating system minimum dry film thickness (DFT) of at least 20.0 mils and not more than 29.0 mils. Measure using a magnetic gage.

C. Unless otherwise specified by manufacturer’s recommendations, do not allow drying time between coats to exceed 72 hours. Under conditions of direct sunlight or elevated ambient temperatures, limit intercoat drying period to that recommended by the coating system manufacturer.

D. Repair detected coating holidays, thin areas, and exposed areas damaged prior to or during installation by surface treatment and application of additional coating or by manufacturer’s recommendations. Allow a period of at least 72 hours to pass following final coat before placing in immersion service.

©COPYRIGHT 2016 CH2M HILL

3.04 SURFACES TO BE COATED

A. Steel Waterfront Construction:

1. Front and back surfaces of bulkhead steel sheet piles from top of sheets to 5-feet below the mudline.

3.05 TOUCH-UP AND REPAIR OF DAMAGE

A. Where a new coat shall overlap an existing coat, the existing coat shall be prepared in accordance with the Steel Structures Painting Council Surface Preparation Specification No. 7 Brush-Off Blasts Cleaning, prior to applying the new coat.

B. After steel piles have been driven, all scratches, scars, abrasions and other damage shall be blast cleaned and touched-up.

3.06 FIELD TESTS

A. Conduct testing in presence of the Owner’s Representative.

B. Holiday Testing:

1. Prior to installation, test for holidays in total coating system. Use a low-voltage holiday detector of less than 90 volts in accordance with manufacturer's instructions.
2. After repair of holidays by surface treatment and application of additional coating or by manufacturer's recommended repair method, retest with a low-voltage holiday detector.

C. Dry Film Thickness:

1. After repair of holidays, measure dry film thickness using a magnetic dry film thickness gage in accordance with ASTM D 7091 and ASTM E 376.
2. Re-measure after an additional coat is applied, and add it to meet minimum thickness requirements.

END OF SECTION

©COPYRIGHT 2016 CH2M HILL

©COPYRIGHT 2016 CH2M HILL

SECTION 31 23 23
EARTHWORK

PART 1 GENERAL

1.01 SECTION INCLUDES

A. Preparation of subgrade (Base and Subbase) for pavement and pavers.

B. Excavation for Electrical Work, Utilities and drainage pipes: Excavation and backfill required in conjunction with underground mechanical and electrical utilities buried mechanical and electrical appurtenances, site utilities and drainage pipes.

1.02 QUALITY ASSURANCE

A. Codes and Standards: Perform earthwork and site grading in compliance with applicable requirements of governing authorities having jurisdiction.

B. Testing and Inspection Service: Employ, at Contractor's expense, an independent testing and inspection laboratory acceptable to Engineer to perform survey for offsite satisfactory soil materials, including sampling and testing of soil materials and to provide field testing facilities for quality control testing during earthwork and site grading operations. A Certified Soils Lab and Engineer shall be retained by the Contractor to direct and monitor all backfilling and compaction procedures, as well as furnish a final certification (by Registered Engineer) letter to the Engineer that all backfill has been properly placed and compacted. This includes all compaction to finished grade, as well as all asphalt paving and stabilized subgrade work.

C. Tests for Proposed Soil Materials: Test soil materials proposed for use in work and promptly submit test result reports.

D. Provide one optimum moisture-maximum density curve for each type of soil encountered in subgrade and fills. Determine maximum densities in accordance with ASTM D1557 (AASHTO T180). Testing service shall determine suitability of materials to be used as fill.

1.03 SUBMITTALS

A. Test Reports: Submit copies of following reports directly to Engineer. All test reports must be signed by a licensed Professional Engineer.

1. Field density test reports.

©COPYRIGHT 2016 CH2M HILL

2. One optimum moisture-maximum density curve for each type of soil encountered.
3. Other tests and materials certificates as required.

1.04 JOB CONDITIONS

A. Site Information: Data on indicated subsurface conditions are not intended as representations or warranties of accuracy or continuity between soil borings. It is expressly understood that Owner will not be responsible for interpretations or conclusions drawn therefrom by Contractor. Data are made available for convenience of Contractor. Additional test borings and other exploratory operations may be made by Contractor at no cost to Owner.

B. Existing Utilities: Locate existing underground utilities in areas of work before starting earthwork operations. Where utilities to remain in place, provide adequate means of protection during earthwork operations.

1. Should uncharted, or incorrectly charted, piping or other utilities be encountered during excavation, consult utility owner immediately for directions. Cooperate with Owner, and public and private utility companies in keeping respective services and facilities in operation. Repair damaged utilities to satisfaction of utility owner.
2. Do not interrupt existing utilities serving facilities occupied and used by Owner or others, except when permitted in writing by Engineer and then only after acceptable temporary utility services have been provided. Provide minimum of 72-hour notice of proposed interruption to Engineer.
3. Demolish and completely remove from site underground utilities indicated to be removed. Coordinate with local utility companies for shut-off of services if lines are active.

C. Use of Explosives: Use of explosives is not permitted.

D. Temporary Protection: Barricade open excavations made as part of earthwork operations and post with warning lights. Operate warning lights as recommended by authorities having jurisdiction. Protect new and existing structures, utilities, pavements, and other facilities from damages caused by settlement, lateral movement, undermining, washout, and other hazards created by earthwork operations.

PART 2 PRODUCTS

2.01 DEFINITIONS

A. Satisfactory soil materials are defined as those complying with ASTM D 2487 soil classification groups GW, GP, GM, SM, SW and SP.

©COPYRIGHT 2016 CH2M HILL

B. Unsatisfactory soil materials are defined as those complying with ASTM D 2487 soil classification groups GC, SC, ML, MH, CL, CH, OL, OH and PT.

C. Satisfactory soil materials are defined as those complying with the American Association of State Highway and Transportation Officials (AASHTO) Designation M145, soil classification Groups A-1, A-2-4, A-2-5, and A-3.

D. Unsatisfactory soil materials are defined as those described in AASHTO M145 for soil classification Groups A-2-6, A-2-7, A-4, A-5, A-6, and A-7; also, peat and other highly organic soils.

E. Cohesionless Soil Materials: Include gravels, sand-gravel mixtures, sands and gravelly-sands.

F. Cohesive Soil Materials: Include clayey and silty gravels, sand-clay mixtures, gravel-silt mixtures, clayey and silty sands, sand-silt mixtures, clays, silts, and very fine sands.

2.02 SOIL MATERIALS

A. Backfill and Fill Materials: Use satisfactory soil materials for backfill and fill, free of rock or gravel larger than 2 inches in any dimension, debris, waste, vegetable, and other deleterious matter and complying with the above definitions. See Article 3.03.A.

B. Pavement/Paver Subbase Material: Properly graded mixture of natural or crushed gravel, crushed stone, crushed slag, natural or processed sand that will readily compact to required density. Use material complying with AASHTO M147, Grade A, unless otherwise indicated.

C. Base Course Aggregate: FDOT Reclaimed Portland Cement Concrete Pavement crushed and processed per FDOT Section 901-5 or FDOT Limerock Material For Base Course and Stabilized Base per FDOT Sections 200 and 911. Provide material which meets FDOT Section 204 for graded aggregate base material for gradation and have an LBR value of not less than 100.

PART 3 EXECUTION

3.01 EXCAVATION

A. General: Excavation consists of removal and disposal of materials encountered when establishing required grade elevations.

©COPYRIGHT 2016 CH2M HILL

B. Excavation is Unclassified, and includes excavation to subgrade elevations indicated, regardless of character of materials and obstructions encountered.

C. Excavation Classifications: The following classifications of excavation will be made when rock excavation is encountered in the Work:

1. Earth excavation includes excavation of pavements and other obstructions visible on ground surface; underground structures, utilities and other items indicated to be demolished and removed; together with earth and other materials encountered that are not classified as rock or unauthorized excavation.
2. Rock excavation in trenches and pits includes removal and disposal of materials and obstructions encountered which cannot be excavated with a 1.0 cubic yard (heaped) capacity, 42 inches wide bucket on track-mounted power excavator equivalent to Caterpillar Model 215, rated at not less than 90 HP flywheel power and 30,000 pound drawbar pull. Trenches in excess of 10 feet-0 inch in width and pits in excess of 30 feet-0 inch in either length or width are classified as open excavation.
3. Rock excavation in open excavations includes removal and disposal of materials and obstructions encountered which cannot be dislodged and excavated with modern track-mounted heavy-duty excavating equipment without drilling, blasting or ripping. Rock excavation equipment is defined as Caterpillar Model No. 973 or No. 977K, or equivalent track-mounted loader, rated at not less than 170 HP flywheel power and developing 40,000 lb. break-out force (measured in accordance with SAE J732C).
4. Typical of materials classified as rock are boulders 1/2 cubic yard or more in volume, solid rock, rock in ledges, and rock-hard cementitious aggregate deposits.
5. Intermittent drilling that may be performed to increase production and is not necessary to permit excavation of material encountered will be classified as earth excavation.

D. Unauthorized excavation consists of removal of materials beyond indicated elevations or side dimensions without the specific direction of Engineer. Replace unauthorized excavation by backfilling and compacting as specified for authorized excavations of same classification, unless otherwise directed by Engineer. Cost of unauthorized excavation and remedial backfill shall be borne by Contractor.

E. Dewatering: Use of dewatering is not permitted, where dewatering would be required at drainage structures bases below water table, the Contractor shall provide a minimum of 12 inches of limerock base below bottom of structure.

©COPYRIGHT 2016 CH2M HILL

F. Material Storage: Stockpile excavated materials classified as satisfactory soil material where directed, until required for fill. Place stockpiled fill materials away from edges of excavation; grade, and shape stockpiles for proper drainage.

G. Excavation for Pavements: Cut surface under pavements to comply with cross-sections, elevations and grades as shown.

H. Excavation for Trenches: Dig trenches to uniform width required for particular item to be installed, sufficiently wide to provide working room.

1. Excavate trenches to depth indicated or required. Carry depth of trenches for piping to establish indicated flow lines and invert elevations.
2. Where rock is encountered, carry excavation 6 inches below required elevation and backfill with a 6-inch layer of crushed stone or gravel prior to installing pipe.
3. For pipes or conduit 5 inches or less in nominal size, do not excavate beyond indicated depths. Hand excavate bottom cut to accurate elevations and support pipe or conduit on undisturbed soil.
4. For pipes or conduit 6 inches or larger in nominal size, tanks and other mechanical/electrical work indicated to receive subbase, excavate to subbase depth indicated, or, if not otherwise indicated, to 6 inches below bottom of work to be supported.
5. Except as otherwise indicated, excavate for exterior water-bearing piping (water, steam, condensate, drainage) so top of piping is not less than 3 feet.-6 inches below finished grade.
6. Grade bottoms of trenches as indicated, notching under pipe bells to provide solid bearing for entire body of pipe.
7. For piping or conduit less than 2 feet-6 inches below surface of roadways, provide 4 in. thick concrete base slab support. After installation and testing of piping or conduit, provide minimum 4-inch thick encasement (sides and top) of concrete prior to backfilling or placement of roadway subbase.
8. Do not backfill trenches until tests and inspections have been made and backfilling is authorized by Engineer. Use care in backfilling to avoid damage or displacement of pipe systems.

I. Closing Abandoned Underground Utilities: Close open ends of abandoned underground utilities indicated to remain with sufficiently strong closure to withstand pressures which may result after closing.

1. Close open ends of metallic conduit and pipe with threaded galvanized metal caps or plastic plugs, or other suitable method for type of material and size of pipe. Do not use wood plugs.
2. Close open ends of concrete and masonry utilities with not less than 8 in thick brick masonry bulkheads, constructed to fill opening.

©COPYRIGHT 2016 CH2M HILL

3. Lay brick in mortar, forming a full bed with ends and side joints in one operation and with maximum 3/8-inch wide joints. Protect fresh masonry from rapid drying and maintain protection until mortar has set.

J. See Article 3.08 for surplus material disposal locations.

3.02 COMPACTION

A. General: Control all soil compaction during construction to provide 98 percent AASHTO T-180 of density specified for each area classification.

B. Moisture Control: Where subgrade or layer of soil material must be moisture conditioned before compaction, uniformly apply water to surface of subgrade or to layer of soil material. Apply water in such manner as to prevent free water from appearing on surface during or subsequent to compaction operations.

C. Remove and replace, or scarify and air dry, soil material that is too wet to permit compaction to specified density.

1. Soil material that has been removed because it is too wet to permit compaction may be stockpiled or spread and allowed to dry. Assist drying by discing, harrowing or pulverizing, until moisture content is reduced to satisfactory value.

3.03 BACKFILL AND FILL

A. General: In excavations, use satisfactory excavated or borrow material that has been sampled, tested and approved by soil testing agency. Obtain materials from an off-site (off Port/Campus property) location. Place in layers to required subgrade elevations indicated.

1. Under walks and pavements/pavers, use subbase material, or excavated or borrow material, or combination of both.
2. Under piping and conduit, provide subbase material where indicated under piping or conduit; shape to fit bottom 90 degrees of cylinder.
3. Ground Surface Preparation: Remove vegetation, debris, unsatisfactory soil materials, obstructions, and deleterious materials from ground surface prior to placement of fills. Flow, strip, or break-up sloped surfaces steeper than 1 vertical to 4 horizontal so that fill material will bond with existing surface.

B. Break-up the ground surface, pulverize, moisture-condition to optimum moisture content, and compact to required depth and specified percentage of relative density. After site clearance, the footprint of any proposed structures and pavement areas shall be compacted with a self-propelled roller

©COPYRIGHT 2016 CH2M HILL

(Dynapac CA-15 or equivalent) until the subsoils achieve 98 percent of maximum dry density (ASTM D1557) to a depth of at least 12 inches below the stripped grade prior to adding backfill. The soil densification should encompass the entire footprint of the structures or the entire paved area, plus a 10 foot wide perimeter that extends beyond the maximum lines of the superstructures.

C. Placement and Compaction: Place backfill and fill materials in layers not more than 8 inches in loose depth for material compacted by heavy compaction equipment (Roller Compactors with vibration), and not more than 4 inches loose depth for material compacted by hand-operated equipment (tampers and plate compactors).

D. Before compaction, moisten or aerate each layer as necessary to provide optimum moisture content of soil material. Compact each layer to required percentage of maximum dry density or relative dry density for each area classification. Do not place backfill or fill material on surfaces that are muddy, frozen, or contain frost or ice.

E. Backfill excavations as promptly as work permits, but not until completion of inspection, testing, approval, and recording location of underground utilities, as required.

3.04 GRADING

A. General: Uniformly grade areas within limits of site grading under this section, including adjacent transition areas. Smooth finished surfaces within specified tolerances, compact with uniform levels or slopes between points where elevations are shown, or between such points and existing grades.

B. Pavements/Pavers: Shape surface of areas under pavement to line, grade and cross-section, with finish surface not more than 1/2-inch above or below required subgrade elevation, compacted as specified, and graded to prevent ponding of water after rains. Include such operations as plowing, discing, and any moisture or aerating required to provide optimum moisture content for compaction. Fill low areas resulting from removal of unsatisfactory soil materials, obstructions, and other deleterious materials, using satisfactory soil material. Shape in line, grade, and cross-section as indicated.

3.05 PAVEMENT/PAVER SUBBASE COURSE

A. General: Subbase course consists of placing subbase and base course material, in layers of specified thickness, over subgrade surface to support a pavement base course.

©COPYRIGHT 2016 CH2M HILL

B. Placing: Place Base course material on prepared and proof rolled subgrade in layers of uniform thickness, conforming to indicated cross-section and thickness. Maintain optimum moisture content for compacting subbase and base material during placement operations.

1. When compacted subbase and base course is shown to be 6 inches thick or less, place material in single layer. When shown to be more than 6 inches thick, place subbase material in equal layers, except no single layer more than 6 in. or less than 3 inches in thickness when compacted.

3.06 FIELD QUALITY CONTROL

A. Quality Control Testing during Construction: Contractor shall provide independent testing service to inspect and approve subgrades (subbase and base) and fill layers before further construction work is performed thereon.

1. Perform field density tests in accordance with ANSI/ASTM D1556 (sand cone method), ANSI/ASTM D 2167 (rubber balloon method) or ASTM 2922 and ASTM 3017 (Nuclear Testing Method) as applicable. (This includes proof rolled insitu material).
2. Make at least one field density test of subgrade for every 1,500 square foot of paved area, but in no case less than 3 tests.
3. In each compacted fill layer, make one field density test for every 1,500 square foot of overlaying paved area, but in no case less than 3 tests.

B. If, based on reports of testing service and inspection, subgrade or fills which have been placed are below specified density, additional compaction and testing will be required until satisfactory results are obtained. Results of density tests of soil-in-place will be considered satisfactory if averages of any 4 consecutive density tests which may be selected are in each instance equal to or greater than specified density, and if not more than 1 density test out of 5 has a value more than 2 percent below required density.

3.07 MAINTENANCE

A. Protection of Graded Areas: Protect newly graded areas from traffic and erosion. Keep free of trash and debris.

B. Repair and re-establish grades in settled, eroded, and rutted areas to specified tolerances.

C. Reconditioning Compacted Areas: Where completed compacted areas are disturbed by subsequent construction operations or adverse weather, scarify surface, re-shape, and compact to required density prior to further construction.

©COPYRIGHT 2016 CH2M HILL

3.08 DISPOSAL OF EXCESS AND WASTE MATERIALS

A. Removal from Owner's Property: Remove all waste materials, including satisfactory and unsatisfactory excavated material, asphalt, trash and debris, and legally dispose off the Owner's property.

END OF SECTION

©COPYRIGHT 2016 CH2M HILL

©COPYRIGHT 2016 CH2M HILL

SECTION 31 41 17
STEEL SHEET PILE BULKHEAD

PART 1 GENERAL

1.01 REFERENCES

A. The publications listed below form a part of this specification to the extent referenced. The publications are referred to within the text by the basic designation only.

1. ASTM International (ASTM):
   a. A6, (2009) General Requirements for Rolled Structural Steel Bars, Plates, Shapes, and Sheet Piling.
   b. A108, (2008) Steel Bars, Carbon, Cold-Finished, Standard Quality.
   c. A307, (2010) Carbon Steel Bolts and Studs, 60,000 psi Tensile Strength.
   d. A325, (2009) Standard Specification for Structural Bolts, Steel, Heat Treated, 120/105 ksi Minimum Tensile Strength.
   e. A328/A328M, 2007 Steel Sheet Piling.
   f. A563, (2007a) Carbon and Alloy Steel Nuts.
   g. A572/A572M, (2007) High-Strength Low-Alloy Columbium-Vanadium Steels of Structural Quality.
   h. A615, (2009b) Deformed and Plain Billet-Steel Bars for Concrete Reinforcement.
   i. A668, (2004, Reapproved 2009) Steel Forgings, Carbon and Alloy, for General Industrial Use.
   j. A992/A992M, (2011) Steel for Structural Shapes for Use in Building Frames.
   k. F436, (2010) Hardened Steel Washers.
2. American Welding Society (AWS):
   a. AWS D1.1/D1.1M, (2010) Structural Welding Code - Steel.
3. Post Tensioning Institute (PTI):
   a. PTI Recommendations for Prestressed Rock and Soil Anchors, 2004.

1.02 SYSTEM DESCRIPTION

A. The Steel Sheet Pile (SSP) Bulkhead specified by this section is a proprietary AZ-steel sheet pile system, manufactured by ArcelorMittal, Parsippany, NJ (973-428-6100) and distributed by Skyline Steel Company, Inc. Parsippany, NJ (866-875-9546), or Engineer approved equal.

©COPYRIGHT 2016 CH2M HILL

1.03 SUBMITTALS

A. Approval is required for submittals, prior to commencing construction. Submit the following (1.03.B-F) in accordance with Section 01 33 00, Submittal Procedures.

B. Submit description of proposed pile-driving equipment, including at a minimum:

1. Make and model of pile-driving hammer, including capacity and rated energy, and hammer details.
2. Weight of capblock assembly, cushion dimensions, type of cushion material and cushion stiffness, helmet, templates, and extracting punching, or drilling equipment.
3. History of proposed pile-driving equipment installing similar sized piles in similar soils.

C. Submit detailed fabrication and erection drawings, including at a minimum:

1. Detailed SSP bulkhead layout drawings, indicating each standard AZ-steel sheet pile, each special fabricated section, each corner section, and showing quantity and length of each type; including tie rods, anchor walls, grouted soil anchors, fabricated wales, hardware, nuts, bolts, fittings, etc.
2. Details of special fabricated sections, including complete dimensions and minimum section properties.
3. Details of wales, wale splices, wale spacers, fixing bolts, nuts, hardened washers, and heavy plate washers.
4. Details of tie rods, including couplers, sleeve nuts, double nuts and heavy plate washers at each end, PTI corrosion protection system for tie rods, or grouted soil anchors, as applicable.
5. Headed and Deformed Bar Anchors.
6. Details and dimensions of templates and other temporary guide structures for installing the bulkhead.

D. Submit manufacturer’s product data and material certification that AZ-steel sheet piles, fabricated wales, tie rods, PTI corrosion protection system for tie rods, grouted soil anchors, couplers, sleeve nuts and hardware meet the specified requirements.

1. Material test reports shall meet the requirements of ASTM A 6/A 6M.
2. Submit certification that surface preparation and protective coating have been applied in conformance with specifications.

E. During pile driving submit records, including the following:

©COPYRIGHT 2016 CH2M HILL

1. Name of project, AZ-steel sheet pile pair number.
2. Driven pile length.
3. Pile length after cut off (if required).
4. Top of pile elevation.
5. Toe of pile elevation.
6. Pile Driving Records:
   a. Records of the completed pile driving operations. Include a system of identification which shows the disposition of approved piling in the work, driving equipment performance data, piling penetration rate data, piling dimensions and top and bottom elevations of installed piling.
   b. Submit complete and accurate test and production pile driving records as specified, within 15 calendar days after completion of driving.

F. Statements:

1. Pile pulling method.
2. Provide details of the method for handling piling to prevent permanent deflection, distortion or damage to piling interlocks and epoxy coating system.
3. Material Certificates:
   a. Submit for each shipment of AZ-steel sheet pile, certificates identified with specific lots prior to installing piling. Identification data should include piling type, dimensions, chemical composition, mechanical properties, section properties, heat number, and mill identification mark.
   b. Submit certificates and statements of conformance and acceptability for turnbuckles and ultrasonic test results.
   c. Submit mill certificates, with chemical composition and mechanical properties, and product cut-sheet data on headed anchor stud connectors.
   d. Submit certificates of compliance for PTI corrosion protection system for tie rods. Refer to Section 31 68 13, Permanent Soil Anchors for specific requirements.
4. Pile Driving Equipment: Submit descriptions of pile driving equipment to be employed in the Work to the Engineer for approval. Descriptive information includes manufacturer’s name, model numbers, capacity, rated energy, hammer details, cushion material, helmet and templates.

1.04 REQUIREMENTS

A. Basis of Bids:

1. Base Lump Sum Bid Price on Steel Sheet Pile (SSP) bulkhead, pile sections and lengths as indicated. No additional payment will be made

©COPYRIGHT 2016 CH2M HILL

for withdrawn, damaged, rejected, or misplaced piles; for any portion of a pile remaining above the cut-off elevation; for backdriving; for cutting off piles, or for any cut-off lengths of piles.

2. Contractor and its SSP bulkhead and steel sheet pile manufacturer/ fabricator shall design, layout and detail the required special fabricated sections and corners, so as to make the bulkhead layout conform to the overall dimensions, as indicated on the Drawings.

B. Steel Sheet Pile (SSP) Bulkhead Manufacturer:

1. SSP bulkhead layout is based on standard AZ-steel sheet piles, as manufactured by ArcelorMittal, 8 Woodhollow Road, Parsippany, NJ 07054 (973-428-6100), and distributed by Skyline Steel Company, Inc., 8 Woodhollow Road, Parsippany, NJ 07054 (866-875-9546).
2. Contractor, at its option, may provide a different type and manufacturer, as long as the SSP bulkhead system complies with all provisions of these specifications, and has at a minimum the same section properties per linear foot of bulkhead and thicknesses of material. Submit tabulated comparison of SSP bulkhead section properties for the specified ArcelorMittal and the Contractor-proposed systems. Piles shall be hot-rolled steel and shall have interlocks of similar geometry as the ArcelorMittal AZ-steel sheet piles.
   a. The minimum web and flange thickness of the pile sections shall be 0.375-inch, and shall meet or exceed the thickness of the specified ArcelorMittal section specified in the plans.
3. Submit SSP bulkhead layout drawing showing detailed layout of all AZ-steel sheet piles, each special fabricated section, each corner section, tie rods, turnbuckles, couplers, anchor walls, deadmen anchors, grouted soil anchors if used, wall penetrations, etc.
4. Contractor and its SSP bulkhead system manufacturer/fabricator shall provide revised engineering designs for each bulkhead. The revised engineering designs shall include, but not be limited to, redesigning and resizing of each of the major structural components for each of the bulkheads, including:
   a. AZ-steel sheet pile section proposed.
   b. Special fabricated sections.
   c. Corner sections.
   d. Reinforced concrete bulkhead cap and encasement.
   e. Steel tie-rods (minimum yield strength of 150 ksi), complete with couplers, heavy steel plate washers and heavy-duty nuts, PTI corrosion protection system for tie rods, and grouted soil anchors (minimum yield strength of 150 ksi).
   f. Continuous AZ-steel sheet pile anchor-walls, including continuous double-channel wales and associated hardware.
5. Contractor and SSP bulkhead system manufacturer/fabricator shall submit design drawings and calculations, indicating the adequacy of the

©COPYRIGHT 2016 CH2M HILL

above redesigned major structural components. Structural design calculations and drawings shall bear the embossed seal, original signature and date (in a color that is different than the reproduction, i.e., blue ink for blacklines and black ink for bluelines) of the State of Florida licensed geotechnical or structural engineer, who was in responsible charge for the preparation of the engineering redesign and drawings. Said Florida licensed structural engineer shall be the Delegated Engineer for the redesigned SSP bulkheads, in accordance with Chapter 471, F.S., and Chapter 61G-15, F.A.C., for the redesign of the SSP bulkhead systems.

1.05 DELIVERY AND STORAGE

A. Materials delivered to the site shall be new and undamaged and shall be accompanied by certified test reports. Provide the manufacturer's logo and mill identification mark on the sheet piling as required by the referenced specifications.

B. Piles shall not have a camber or sweep in excess of the permitted mill tolerance and ASTM A6.

C. Deliver AZ-steel sheet piles in pairs, achieved by the crimping of the interlocks.

D. Store and handle piling in the manner recommended by the manufacturer to prevent permanent deflection, distortion or damage to the interlocks and coating; and to provide adequate support.

E. Handle piling using handling holes or lifting devices. Handle long length piles with multiple lifting points and care to prevent damage. Handle epoxy coated piling with slings.

F. Storage and handling of sheet piling should also facilitate required inspection activities and prevent damage to coatings and corrosion protection systems, prior to installation.

G. Support piling on level blocks or racks spaced not more than 10 feet apart and not more than 2 feet from the ends. Supports between multiple lifts shall be aligned in a vertical plane.

H. Store and handle tie-rods, with PTI corrosion protection system, with multiple lifting points and supporting blocks to prevent damage.

1.06 FIELD MARKING ELEVATIONS

A. Provide elevation reference and mark each pile to permit determination of the pile tip and top elevations.

©COPYRIGHT 2016 CH2M HILL

PART 2 PRODUCTS

2.01 AZ-STEEL SHEET PILES, HZ-PILES AND H-PILES

A. AZ-steel sheet piles shall be manufactured of hot-rolled steel conforming to the following:

1. AZ14-770 Steel Sheet Piles: ASTM A572, Grade 50, (50 ksi).

B. Sheet piles and interlocks shall be coated as specified on Section 09 97 13, Coating of Steel Waterfront Structures.

C. Interlocks of sheet piling shall be free-sliding, allowing a swing angle of at least 5 degrees when threaded and maintain continuous interlocking when installed. Welds of interlocking to SSP shall be trade in the shop and as indicated on Section 05 05 23, Welding.

D. Piling, including corner sections, and special fabricated sections, shall be full-length sections to the dimensions shown, or as required to complete the bulkhead to the overall dimensions indicated.

E. Fabricated sections shall conform to the requirements herein and the piling manufacturer’s recommendations for fabricated sections. Fabricated corners, tees and cross pieces shall be fabricated of piling sections with a minimum thickness of 1/2-inch.

F. Provide piling with standard pulling holes.

2.02 WALES, WALE SPLICE PLATES AND PLATE WASHERS

A. Structural steel shapes and plates are designed based on a minimum 50 ksi yield strength. Provide shapes and plates in conformance with one of the following:

1. ASTM A572, Grade 50 (50 ksi).
2. ASTM A992, Grade 50 (50 ksi).

2.03 GROUTED SOIL ANCHORS AND TIE RODS

A. Grouted Soil Anchors: Provide grouted soil anchors in accordance with Section 31 68 13, Permanent Soil Anchors.

B. High Strength Tie Rods:

©COPYRIGHT 2016 CH2M HILL

1. All-thread bar tie rods shall conform to ASTM A722, A772M, with 150 ksi yield strength. Refer to Section 31 68 13, Permanent Soil Anchors, Paragraph 2.01 Rods.
2. High strength bars with rolled threads, complete with compatible, high-strength heavy hex nuts, hardened washers, splicing couplers, and heavy duty plate washers.
3. Welded tie rod splices will not be permitted.
4. Contractor, at its option, may provide high-strength tie rods of a different type and manufacturer, as long as the tie rods comply with all of the provisions of these specifications, have at a minimum the same allowable tensile load capacity as the tie rods shown in the Contract Drawings, with a maximum yield strength of 150 ksi.
5. PTI Corrosion Protection System: Provide a complete coating or encasement to protect all parts of the system from corrosion. Corrosion protection shall as a minimum meet Class 1 Protection, Multiple Corrosion Protection III per PTI Manual (Post Tensioning Institute), Recommendations for Prestressed Rock and Soil Anchors, 2004), with a service design life of at least 50 years.
6. Flowable fill shall be installed and allowed to harden prior to stressing the tie rods.

2.04 BACKFILL

A. Install flowable fill to at least the base of the concrete cap and allow it to harden prior to stressing the soil anchors. After all of the tie backs are stressed and tested, the concrete cap can be poured, followed by completing backfilling behind the wall with flowable fill and the installation of the concrete pavement.

2.05 TURNBUCKLES AND COUPLERS

A. Conform to ASTM A668, heat-treated and ultrasonic tested.

B. Manufactured to carry at least 133 percent of the tie rod tensile capacity.

C. Turnbuckles and couplers shall be manufactured by the high-strength, all-thread bar tie rod manufacturer.

D. Provide turnbuckles and couplers, as required, to splice tie rods and to take-up excess slack in tie rods.

2.06 BOLTS AND NUTS

A. Bolts shall conform to ASTM A325X.

©COPYRIGHT 2016 CH2M HILL

B. Nuts shall conform to ASTM A563, heavy hex head, to match ASTM A325X bolts.

C. Washers shall conform to ASTM F436, plain carbon steel, hardened, to match ASTM A325X bolts.

2.07 APPURTENANT METAL MATERIALS

A. Provide metal plates, shapes, bolts, nuts and other appurtenant fabrication and installation materials conforming to manufacturer's standards and to the requirements specified in the respective sheet piling standards.

2.08 SHOP PROTECTIVE COATING

A. Apply to all steel sheet piles, wales, connection plates, nuts, bolts, washers, and accessories, exposed to earth and saltwater.

B. Protective coating shall be applied in a controlled shop environment. Submit procedures and details in writing to the Engineer for approval, in accordance with Section 09 97 13.26, Coating of Steel Waterfront Structures.

C. Provide a complete PTI Class 1, MCPIII corrosion protection system to all high-strength all-thread-bar tie rods, as specified herein, and in Section 31 68 13, Permanent Soil Anchors. Refer to Drawing Number DS-301 for type of corrosion protection system to be provided for the all-thread-bar tie rods.

2.09 CONCRETE CAP AND SHEET PILE ENCASEMENT

A. Concrete, Forms and Reinforcement: Provide concrete, forms and reinforcement in accordance with Section 03 31 29, Cast-in-Place Concrete for Marine Structures.

B. Surface Preparation: Remove all loose rust and mill scale, earth and other deleterious materials from the pile surfaces, which reduce or destroy bond with concrete.

2.10 TESTS, INSPECTIONS, AND VERIFICATIONS

A. Requirements for material tests, workmanship and other measures for quality assurance shall be provided in accordance with Section 05 50 13, Metal Fabrications, and as specified herein.

B. Materials Tests:

1. Perform materials tests conforming to the following requirements. Sheet piling and appurtenant materials shall be tested and certified by the

©COPYRIGHT 2016 CH2M HILL

manufacturer to meet the specified chemical, mechanical and section property requirements prior to delivery to the site.

2. Testing of steel sheet piles for mechanical properties shall be performed after the completion of all rolling and forming operations. Testing of sheet piles shall meet the requirements of ASTM A 6/A 6M, ASTM A328, and ASTM A572, as applicable.

PART 3 EXECUTION

3.01 INSTALLATION

A. Pile Driving Records:

1. Develop a form compiling pile driving records, which must be approved, by the Engineer for recording pile driving data. Compile and submit accurate records of the pile driving operations on the approved form in accordance with paragraph “Submittals”.
2. Include in driving records for each pile:
   a. date driven,
   b. pile identification number,
   c. cross section shape and pile dimensions,
   d. location and deviations from design location,
   e. original length,
   f. ground elevation,
   g. top elevation,
   h. toe elevation,
   i. description of hammer used,
   j. number of blows required for each foot of penetration throughout the entire length of the pile and for each inch of penetration in the last foot of penetration,
   k. total driving time in minutes and seconds, and
   l. any other pertinent information as required or requested such as unusual driving conditions, interruptions or delays during driving, damage to pile resulting from driving, heave in adjacent piles, redriving, weaving, obstructions, predrilling, prepunching, and depth and description of voids formed adjacent to the pile.
3. Additional data required to be recorded for impact hammers includes:
   a. rate of hammer operation,
   b. make and size of hammer, and
   c. the length of the bounce hose.
4. Additional data required to be recorded for vibratory hammers includes:
   a. hammer power pack description,
   b. make and size,
   c. horsepower applied to pile, and
   d. hammer operating frequency.

©COPYRIGHT 2016 CH2M HILL

B. Pile Hammer: Use a pile hammer having a delivered force or energy suitable for the total weight of the pile and the character of subsurface materials to be encountered. Operate hammer at the rate(s) recommended by the manufacturer throughout the entire driving period. Repair damage to piling caused by use of a pile hammer with excess delivered force or energy. Vibratory Hammer use is allowed (if feasible) but the final 2 feet to reach depth tip elevations shall be driven by diesel hammer to set the pile into the rock. During SSP vibratory and impact hammer install, Contractor shall monitor the existing site and adjacent structures, utilities and pavement to ensure damage to existing and new facilities does not take place. Contractor shall stop work and discuss with City should vibrations appear to be creating adverse and detrimental impacts to the site.

C. Pile Protection: Use a protecting cap during driving to prevent damage to the top of the sheet piling. Provide toe protection if needed to penetrate hard driving into the weathered limestone strata.

D. Templates:

1. Prior to driving, provide template or driving frame suitable for aligning, supporting, and maintaining SSP bulkhead piling in the correct position during setting and driving. Use a system of structural framing sufficiently rigid to resist lateral and driving forces and to adequately support the piling until design tip elevation is achieved.
2. Templates shall not move when supporting piling. Fit templates with wood blocking to hold the piling at the design location alignment. Provide outer template straps or other restraints as necessary to prevent the piling from warping or wandering from the alignment.
3. Piling shall be carefully located as shown. Piling shall be placed plumb with out-of-plumbness not exceeding 1/8 inch per foot of length and true to line. Place the pile so the face will not be more than 6 inches from vertical alignment at any point. Top of pile at elevation of cut-off shall be within 1/2 inch horizontally and 2 inches vertically of the location indicated. Manipulation of piles to force them into position will not be permitted. Check all piles for heave. Redrive all heaved piles to the required tip elevation.
4. Mark template for the location of the leading edge of each alternate sheet pile. If two guide marks cannot be seen, other means shall be used to keep the sheet pile vertical along its leading edge.

E. Driving:

1. Drive piling with the proper size hammer and by approved methods so as not to subject the piling to damage and to ensure proper interlocking throughout their lengths.

©COPYRIGHT 2016 CH2M HILL

2. Maintain driving hammers in proper alignment during driving operations by use of leads or guides attached to the hammer.
3. Employ a protecting cap in driving when using impact hammers to prevent damage to the tops of piling. Remove and replace piling damaged during driving or driven out of interlock at the Contractor's expense.
4. Drive piling without the aid of a water jet.
5. Take adequate precautions to ensure that piling are driven plumb. Where possible, drive AZ-steel sheet piles with the ball end leading. If an open socket is leading, a bolt or similar object placed in the bottom of the interlock will minimize packing material into it and ease driving for the next sheet.
6. If at any time the forward or leading edge of the piling is found to be out-of-plumb in the plane of the wall the piling being driven shall be driven to the required depth and tapered piling shall be provided and driven to interlock with the out-of-plumb leading edge or other approved corrective measures shall be taken to insure the plumbness of succeeding pilings. The maximum permissible taper for any tapered piling shall be 1/8 inch per foot of length.
7. If hard driving or obstructions restrict driving a piling to the specified penetration, the obstructions shall be removed or penetrated with a chisel beam, a punch, a probe, or a drill. If the Contractor demonstrates that removal or penetration is impractical, make changes in the design alignment of the piling structure as directed by the Engineer, to ensure the adequacy and stability of the structure. Piling shall be driven to depths shown and shall extend up to the elevation indicated for the top of piling. A tolerance of 1 inch above the indicated top elevation will be permitted. Piling shall not be driven within 100 feet of concrete less than 7 days old.
    a. Hard driving is defined as the point the pile reaches practical refusal prior to reaching the specified depth of penetration.
    b. Sheet Pile Practical Refusal is defined as zero rate of penetration, while using a vibratory-hammer, for at least 10 seconds.
8. Pre-augering or spudding of piles will not be permitted.

F. Cutting-Off and Splicing:

1. Piles driven to refusal or the point where additional penetration cannot be attained and are extending above the required top elevation in excess of the specified tolerance may be cut-off to the required elevation, only at the Engineer’s direction.
2. Piles driven below the required top elevation and piles damaged by driving and cut-off to permit further driving shall be extended as required to reach the top elevation by splicing when directed by the Engineer, at no additional cost to the Owner.

©COPYRIGHT 2016 CH2M HILL

3. If directed by the Engineer, splice piles as required to drive them to depths greater than shown on the drawings and extend them up to the required top elevation. Piles adjoining spliced piles shall be full length unless otherwise approved by the Engineer.
4. If splices are allowed in adjoining piles, the splices shall be spaced at least 10 feet apart in elevation.
5. Ends of piles to be spliced shall be squared before splicing to eliminate dips or camber. Splice piles with concentric alignment of the interlocks so that there are no discontinuities, dips or camber at the abutting interlocks.
6. Spliced piles shall be free sliding and able to obtain the maximum swing with contiguous piles.
7. Trim the tops of piles excessively battered during driving, when directed at no cost to the Owner. Pile cut-offs shall become the property of the Contractor and shall be removed from the site.
8. Use a straight edge in cutting by burning to avoid abrupt nicks. Bolt holes shall be drilled or may be burned and reamed by approved methods which will not damage the surrounding metal. Holes other than bolt holes shall be reasonably smooth and the proper size for tie rods, reinforcement or other items to be inserted. Do not use explosives for cutting.
9. Weld splices in accordance with Section 05 05 23, Welding, Structural and Section 05 50 13 – Metal Fabrications. Shop and field welding, qualification of welding procedures, welders, and welding operators, and inspections by AWS Certified Welding Inspectors, shall be in accordance with AWS D1.1/D1.1M.

G. Tolerances in Driving:

1. Drive all piles with a variation from vertical of not more than 1/8 inch per foot, with a maximum deviation of not more than 6 inches from vertical alignment at any point.
2. Top of pile at elevation of cut-off shall be within +/-1/2 inch vertically of the elevation indicated.
3. Top of pile at elevation of cut-off shall be within +/-2 inches of alignment indicated.
4. Manipulation of piles to force them into position will not be permitted.
5. Check all piles for heave. Redrive all heaved piles to the required tip elevation.

H. Corrosion Protection: Provide SSP bulkhead coating system in accordance with Section 09 97 13, Coating of Steel Waterfront Structures.

I. PTI Corrosion Protection System: Provide all high-strength all-thread-bar tie rods with a PTI MCPIII, Class 1 Protection system, in accordance with Section 31 68 13, Permanent Soil Anchors and as specified herein.

©COPYRIGHT 2016 CH2M HILL

3.02 INSPECTION

A. Perform continuous inspection during pile driving. Inspect all piles for compliance with tolerance requirements. Bring any unusual problems which may occur to the attention of the Engineer and the Owner's Geotechnical Engineer.

B. Inspection of Driven Piling:

1. Contractor shall inspect the interlocks of the portion of driven piles that extend above ground.
2. Contractor shall use divers to inspect the underwater portions of sheet piling interlocks should the question of piles out of interlock below water level be raised.
3. Remove and replace piles found to be out of interlock, at no additional cost to the Owner.

C. Pulling and Redriving:

1. Contractor may be required to pull selected piles after driving to determine the condition of the underground portions of piles.
2. Contractor shall be required to pull and redrive piles that do not meet specified tolerances.
3. The pile pulling method must be approved by the Engineer.
4. Remove and replace at the Contractor's expense any pile pulled and found to be damaged to the extent that its usefulness in the structure is impaired.
5. Redrive piles pulled and found to be in satisfactory condition.
6. Remove all damaged and out of tolerance piling from the Owner's site.

3.03 INSTALLATION RECORDS

A. Maintain a pile driving record for AZ-steel sheet piles.

B. Indicate on the installation record: dates and times, type and size of hammer, rate of operation, total driving time, dimensions of driving helmet and cap used, blows required per foot for each foot of penetration, final driving resistance in blows for final 6 inches, pile locations (x, y, & z), tip elevations, ground elevations, cut-off elevations, and any reheading or cutting of piles.

C. Record any unusual pile driving problems during driving.

D. Submit complete driving records to the Engineer.

END OF SECTION

©COPYRIGHT 2016 CH2M HILL

©COPYRIGHT 2016 CH2M HILL

SECTION 31 63 29
DRILLED CONCRETE PIERS

PART 1 GENERAL

1.01 REFERENCES

A. The following is a list of standards which may be referenced in this section:

1. ASTM International (ASTM):
   a. A82, Standard Specification for Steel Wire, Plain, for Concrete Reinforcement.
   b. A276, Standard Specification for Stainless Steel Bars and Shapes.
   c. A615, Standard Specification for Deformed and Plain Billet-Steel Bars for Concrete Reinforcement.
   d. E329, Standard Specification for Agencies Engaged in the Testing and/or Inspection of Materials Used in Construction.
2. FDOT: Standard Specifications for Road and Bridge Construction.

1.02 DRILLED SHAFT CONSTRUCTION AND TESTING

A. Drilled shaft materials, construction and testing shall be in accordance with FDOT Standard Specifications for Road and Bridge Construction.

B. Concrete shall be FDOT Class IV (Drilled Shaft) meeting FDOT specification Section 346 for Concrete and Section 415 for Reinforcing Steel.

C. Shafts shall be installed in accordance with section 455 of the FDOT standard specifications using the permanent casing method. Casing used shall be Schedule 40 steel per FDOT 455-16.4. Use only three CSL tubes as shown in the plans. CSL shall be performed on every shaft in the new dolphin.

D. No other load testing is required.

E. Payment of drilled shafts shall be compliant with the project specifications and not the FDOT payment methods outlined in section 455.24 of the standard specifications. All concrete testing by Contractor.

1.03 FIELD QUALITY CONTROL

A. The Contractor shall employ a testing laboratory to obtain or make samples, to perform tests and to submit test reports, except as designated otherwise. The testing laboratory and its employees shall be qualified in accordance with ASTM E329, and the inspection and testing activities shall be in accordance with ASTM E329.

©COPYRIGHT 2016 CH2M HILL

B. Sampling Fresh Concrete: ASTM C172, except modified for slump to comply with ASTM C94.

1. Slump: ASTM C143; one test at point of discharge for each set of compression cylinders taken; additional tests when concrete consistency appears to have changed; and one test on each truck load of concrete delivered to the site.
2. Air Content: ASTM C231 pressure method for normal weight concrete; one for each set of compression cylinders taken.
3. Molded Concrete Compression Cylinders: Sample in accordance with to ASTM C172, process and cure in accordance with to ASTM C31, and prepare and test in accordance with to ASTM C39.
   a. Obtain one set of four (4) cylinders for each 50 cu. yd., or fraction thereof, for each day's placement of each mix design.
   b. Test one cylinder at age 3-days or 7-days, as required by job conditions and two (2) cylinders for one valid strength test at 28- days.

   c. Cure and hold fourth cylinder for testing at 42-days if 28-day test indicated deficient results, or as a spare in case of cylinder damage.

C. Manufacturers Field Service: Contractor shall provide and pay for services of a qualified technician(s) employed by the manufacturer(s) of the superplasticizer and flyash admixtures to provide the following:

1. Assist the Contractor in proportioning concrete materials for optimum use.
2. Advise the Contractor on proper use of the admixture.
3. Make adjustments of the concrete mix proportions to meet jobsite and climatic conditions.

D. Reports: Promptly submit four (4) copies of certified written reports of test results, with the following additional data:

1. Time concrete batched and time sampled.
2. Water added at site.
3. Superplasticizer added at site.
4. Strength class.
5. Delivery ticket number.
6. Concrete suppliers mix designation.
7. Location of concrete in the work.

E. All concrete testing by Contractor.

END OF SECTION

©COPYRIGHT 2016 CH2M HILL

SECTION 31 68 13
PERMANENT SOIL ANCHORS

PART 1 GENERAL

1.01 DESIGN AND PERFORMANCE REQUIREMENTS

A. Contractor shall design, fabricate and install permanent grouted ground anchor system of high strength steel rods to restrain and control the displacement of structural bulkhead elements by developing vertical and lateral load carrying members which develop resisting forces by stressing the soil around the anchorage length. The system shall include, but not be limited to, the following elements:

1. Rods: High strength steel rods which include:
   a. Bond Length: Where the rod is fixed in the primary grout bulb and transfers the tension force to the surrounding soil.
   b. Free Length: An unbonded zone where the tendon is free to elongate elastically transferring the resisting force from the anchor bond length to the structural cap beam.
2. Anchor grout mix design, including both primary and secondary mixes.
3. Anchorage: Plates or anchor heads which permit stressing and lock-off of the prestressing steel.
4. Corrosion Protection: Complete coating or encasement to protect all parts of the system from corrosion. Corrosion protection shall as a minimum meet Class I Protection, Multiple Corrosion Protection III per PTI Manual. (Post Tensioning Institute, Recommendations for Prestressed Rock and Soil Anchors, 2004).
5. Service Design Life: Design permanent grouted ground anchor system to have a service life of 50 years.

B. Design of anchorage system shall be provided by a Professional Geotechnical Engineer, licensed in the State of Florida.

1.02 QUALIFICATIONS

A. Contractor performing the work described in this Specification shall have installed permanent grouted soil anchors for a minimum of 5 years. At the preconstruction conference, the Contractor shall submit a list containing at least five projects, completed within the last 3 years, where the Contractor has installed permanent grouted soil anchors. A brief description of each project and a reference shall be included for each project listed. As a minimum, the reference shall include an individual's name and current phone number.

B. Prior to the start of work, Contractor shall submit a list identifying his engineer, drill operators and onsite supervisors who will be assigned to the Project. The list shall contain a summary of each individual's experience and it

©COPYRIGHT 2016 CH2M HILL

shall be complete enough for the Engineer to determine whether or not each individual has satisfied the following qualifications.

C. Contractor shall retain a Professional Geotechnical Engineer, licensed in the State of Florida, to supervise the work with at least 5 years of experience in the design and construction of permanent grouted anchor system structures. Contractor shall not use consultants or manufacturers' representatives in order to meet the requirements of this Section. Drill operators and onsite supervisors shall have a minimum of 5 years experience installing permanent grouted soil anchors with the Contractor's organization.

D. The Engineer will approve or reject the Contractor's qualifications and staff within 15 working days after receipt of the submission. Work shall not be started on any soil anchor nor materials ordered until approval of the Contractor's qualifications. The Engineer may suspend the grouted soil anchor work, if the Contractor substitutes unqualified personnel for approved personnel during construction. If work is suspended due to the substitution of unqualified personnel, the Contractor shall be fully liable for additional costs resulting from the suspension of work and no adjustment in contract time resulting from the suspension of work will be allowed.

1.03 SUBMITTALS

A. Product Data: Manufacturers catalog data on each component of the system.

B. Drawings: Provide design and fabrication drawings of grouted ground anchors including, but not limited to, layout of rods, sequencing of installation, angle of inclination, anchor length, bond length and minimum unbonded length. Include design data, design calculations and criteria pertinent to design of system. Drawings and calculations shall be signed and sealed by a Professional Geotechnical Engineer licensed by the State of Florida.

C. Certificates of Compliance for all materials.

D. Testing sequence, plan and methodology for each anchor following at a minimum, the requirements of Article 3.02. Submit with Item 1.03E.

E. Contractor shall submit to the Engineer for review and approval or rejection, calibration data for each test jack, pressure gauge and reference pressure gauge to be used. Testing cannot commence until the Engineer has approved the jack, pressure gauge, reference pressure gauge calibrations and testing plan.

F. Contractor shall submit to the Engineer within 20 calendar days after completion of the grouted soil anchor work a report containing at a minimum:

1. Steel manufacturer's certified mill test reports for the high strength steel rods incorporated in the installation.

©COPYRIGHT 2016 CH2M HILL

2. Grouting records indicating the cement type, quantity injected and the grout pressures; and
3. Grouted soil anchors certified load test results and graphs.

PART 2 PRODUCTS

2.01 RODS

A. All-thread-bars: ASTM A722 continuous threaded steel bars, minimum 150 ksi, fabricated from high quality domestic material.

1. Bar Size: Diameter as determined by design. Size so the tensile design load does not exceed 60 percent of the minimum specified ultimate tensile strength or the maximum test load does not exceed 80 percent of the minimum specified ultimate tensile strength of the rod. Provide bars in maximum single lengths possible.
2. Finish: ASTM A153 hot-dip galvanized or ASTM A775 epoxy-coated.
3. Centering Devices: Fabricate bars with plastic or steel spacing devices designed to hold the tie rod in the center of the borehole of the bonded length.

B. Couplings for bar lengths over 40 feet, provide galvanized or epoxy-coated mechanical splicing couplings of internally threaded steel designed to develop 125 percent of the ultimate strength of the all-thread-bars.

C. Rods shall be free of dirt, rust, or any other deleterious substance. The bond length shall be degreased. Rods shall be handled and protected, prior to installation, in such a manner as to avoid corrosion and physical damage thereto. Damage such as abrasion kinks, welds, and weld splatters, cuts, nicks, will impair the proper performance of the rod and shall be cause for rejection.

2.02 ANCHOR GROUT

Primary Grout: Portland Cement based mixture with pozzolanic material, fluidifier, sand and water proportioned and mixed to produce a grout capable of being pumped, with a minimum ultimate compressive strength of 4,000 psi at 28 days.

1. Portland Cement: ASTM C150.
2. Pozzolan: Fly ash or other approved pozzolanic material conforming to ASTM C618, Type F.
3. Fluidifier: ASTM C937, except that expansion shall not exceed 4 percent.
4. Water: Fresh, clean, and potable.
5. Fine Aggregate: ASTM C33, hard, dense, durable, fine sand.

©COPYRIGHT 2016 CH2M HILL

B. Secondary Grout: Portland Cement based mixture designed to be injected into the drilled hole after stressing to provide corrosion protection for unsheeted tendons.

C. Testing: Strength testing will not be required as system performance will be measured by proof-testing. The Owner may require grout cube testing if admixtures are used or irregularities occur in anchor testing. The grout shall attain a minimum cube strength of 3,400 psi within 7 days.

2.03 ANCHORAGE

A. Steel Plate: ASTM A36 or ASTM A992, Grade 50, hot-dip galvanized.

B. Nuts, Washers and Caps: Hardened, heavy hex head steel fasteners, spacers and similar accessories and appurtenances as required for a complete tie rod system.

PART 3 EXECUTION

3.01 INSTALLATION

A. Boreholes: Drill anchor holes by augering, precussion or conventional rotary drilling methods. Flush hole with air and/or water as required to remove loose material. Extend boreholes to the full design length and declination of each anchor. Drill boreholes such that the anchorage length is constructed to achieve required resistance and the free length is isolated from the surrounding soil. Slope of anchor shall be within 3 percent of the design inclination.

B. Primary Grouting: Extend casing, if required by design, and tremie-grout the hole and casing full of the primary grout mixture. The grout shall be injected from the lowest point of the drill hole. The grout may be pumped through grout tubes, casing, hollow-stem-augers or drill rods. The grout can be placed before or after insertion of the rods. The quantity of the grout and the grout pressures shall be recorded. The grout pressures and grout takes shall be controlled to prevent excessive heave or fracturing. The following data concerning the grouting operation shall be recorded:

1. Type of Mixer.
2. Water/cement ratio.
3. Types of Admixtures: Fluidifier.
4. Grout pressure.
5. Type of cement.
6. Strength Test Samples.
7. Volume of first and second stage grout.

©COPYRIGHT 2016 CH2M HILL

C. Tie Rods: Insert rods to full design length. Verify that centering devices are in place for maintaining the tendon bar in the center of the borehole.

D. Pressure grout the bond length and completely withdraw the casing over bond length.

E. Install flowable fill to the bottom of the concrete cap.

F. Stressing: After waler has been installed at least 12 feet beyond the anchor location, begin stressing the tie rods as required.

G. Concrete Cap: Construct concrete cap beam as indicated in Drawings.

H. Complete the installation of flowable fill and install concrete pavement.

3.02 FIELD QUALITY CONTROL

A. Contractor shall provide anchor proof test load up to 133 percent of the designated design load, using remote load cell read out unit and a dual pressure gauge system. All anchors shall be proof tested.

B. Testing (By Contractor):

1. As soil anchors are installed to required resistance, begin testing performance. Performance load test the first two anchors and one of every ten anchors thereafter, as selected by the Engineer.
2. Prior to the grouting of any additional soil anchors, the first two performance tests shall be completed. The purpose of these initial tests is to verify the Contractor's installation procedures and confirm adequate resistance for the design loads.
3. All anchors shall be proof tested.
4. One anchor, at the Engineer’s discretion shall be performance, creep and proof tested.
5. The results of each test shall be recorded on forms approved by the Engineer. The testing forms provided in the appendix of the AASHTO-AGC-ARTBA Joint Committee Task Force 27 Report are acceptable. A separate form shall be submitted for each test. The test results shall be submitted to the Engineer on a weekly basis within one week of testing.
6. No load greater than 10 percent of the design load can be applied to the soil anchor prior to testing. The maximum test load shall not exceed 80 percent of the minimum specified ultimate tensile strength of the rod.

C. The testing equipment shall consist of:

1. A dial gauge or vernier scale capable of measuring to 0.001 inch shall be used to measure the ground anchor movement. The

©COPYRIGHT 2016 CH2M HILL

movement-measuring device shall have a minimum travel equal to the theoretical elastic elongation of the total anchor length at the maximum test load and it shall have adequate travel so the soil anchor movement can be measured without resetting the device.

2. A hydraulic jack and pump shall be used to apply the test load. The jack and a calibrated pressure gauge shall be used to measure the applied load. The jack and pressure gauge shall be calibrated by an independent firm as a unit. The calibration shall have been performed within 45 working days of the date submitted. Testing cannot commence until the Engineer has approved the calibration. The pressure gauge shall be graduated in 100 psi increments or less. The ram travel of the jack shall not be less than the theoretical elastic elongation of the total anchor length at the maximum test load.
3. Contractor shall furnish Engineer with a calibrated reference pressure gauge to be kept at the site in possession of the Engineer. The reference gauge shall be calibrated with the test jack and pressure gauge.
4. Contractor shall provide an electrical resistance load cell and readout to be used when performing a creep test.
5. The stressing equipment shall be placed over the soil anchor in such a manner that the jack, bearing plates, load cells and stressing anchorage are axially aligned with the tendon and the tendon is centered within the equipment.

D. Performance Test: The load shall be raised from one increment to another immediately after recording the soil anchor movement. The soil anchor movement shall be measured and recorded to the nearest 0.001 inch with respect to an independent fixed reference point at the alignment load and at each increment of load. The load shall be monitored with a pressure gauge. The reference pressure gauge shall be placed in series with the pressure gauge during each performance test. If the load determined by the reference pressure gauge and the load determined by the pressure gauge differ by more than 10 percent, the jack, pressure gauge and reference pressure gauge shall be recalibrated at no expense to the Owner. At load increments other than the maximum test load, the load shall be held just long enough to obtain the movement reading.

1. The performance test shall be made by incrementally loading and unloading the soil anchor in accordance with the following schedule:

PERFORMANCE TEST SCHEDULE

Load	Load
AL	AL
0.25DL*	0.25DL
AL	0.50DL
0.25DL	0.75DL

©COPYRIGHT 2016 CH2M HILL

PERFORMANCE TEST SCHEDULE

Load	Load
0.50DL*	1.00DL
AL	1.20DL*
0.25DL	AL
0.50DL	0.25DL
0.75DL*	0.50DL
AL	0.75DL
0.25DL	1.00DL
0.50DL	1.20DL
0.75DL	1.33DL*
1.00DL*	Reduce to lock-off load

Where: AL - is the alignment load.
DL - is the soil anchor design load.

2. The maximum test load in a performance test shall be held for at least 10 minutes. The jack shall be repumped as necessary in order to maintain a constant load. The load-hold per rod shall start as soon as the maximum test load is applied and the soil anchor movement, with respect to a fixed reference, shall be measured and recorded at 1 minute, 2, 3, 4, 5, 6 and 10 minutes. If the soil anchor movement between 1 minute and 10 minutes exceeds 0.04 inch, the maximum test load shall be held for an additional 50 minutes. If the load hold is extended, the soil anchor movement shall be recorded at 15 minutes, 20, 25, 30, 45 and 60 minutes.
3. Contractor shall plot the soil anchor movement versus load for each load increment marked with an asterisk (*) in the performance test schedule and plot the residual movement of the tendon at each alignment load versus the highest previously applied load.

E. Proof Test: The load shall be raised from one increment to another immediately after recording the soil anchor movement. The soil anchor movement shall be measured and recorded to the nearest 0.001 inch with respect to an independent fixed reference point at the alignment load and at each increment of load. The load shall be monitored with a pressure gauge. At load increments other than the maximum test load, the load shall be held just long enough to obtain the movement reading.

1. The maximum test load in a proof test shall be held for at least 10 minutes. The jack shall be repumped as necessary in order to maintain a constant load. The load-hold period shall start as soon as the maximum test load is applied and the prestressed soil anchor movement, with respect to an independent fixed reference, shall be measured and

©COPYRIGHT 2016 CH2M HILL

recorded at 1 minute, 2, 3, 4, 5, 6 and 10 minutes. If the soil anchor movement between one minute and ten minutes exceeds 0.04 inch, the maximum test load shall be held for an additional 50 minutes. If the load-hold is extended, the soil anchor movements shall be recorded at 15 minutes, 20, 25, 30, 45 and 60 minutes.

2. The proof test shall be performed by incrementally loading the soil anchor in accordance with the following schedule:

PROOF TEST SCHEDULE

Load	Load
AL	1.00DL
0.25DL	1.20DL
0.50DL	1.33DL
0.75DL	Reduce to lock off load

Where: AL - is the alignment load.
DL - is the soil anchor design load.

3. The proof test results will be compared to the performance test results. Any significant variation from the performance test results warrants making a performance test on the next anchor.
4. Contractor shall plot the soil anchor movement versus load for each load increment in the proof test.

F. Creep Test: The Engineer will determine those soil anchors to be creep tested.

1. The creep test shall be made by incrementally loading and unloading the soil anchor in accordance with the performance test schedule given above. At the end of each loading cycle, the load shall be held constant for the observation period indicated in the creep test schedule below. The times for reading and recording the soil anchor movement during each observation period shall be 1 minute, 2, 3, 4, 5, 6, 10, 15, 20, 25, 30, 45, 60, 75, 90, 100, 120, 150, 180, 210, 240, 270 and 300 minutes as appropriate. Each load-hold period shall start as soon as the test load is applied. In a creep test, the pressure gauge and reference pressure gauge will be used to measure the applied load and the load cell will be used to monitor small changes in load during a constant load-hold period. The jack shall be repumped as necessary in order to maintain a constant load.
2. Contractor shall plot the soil anchor movement and the residual movement measured in a creep test as described for the performance test above. Contractor shall also plot the creep movement for each load-hold as a function of the logarithm of time.

©COPYRIGHT 2016 CH2M HILL

CREEP TEST SCHEDULE

Load	Observation Period (min.)
AL	
0.25DL	10
0.50DL	30
0.75DL	30
1.00DL	45
1.20DL	60
1.33DL	300

G. Lockoff: Upon satisfactory completion of all testing, the load shall be reduced to the lockoff load and transferred to the anchorage device. After transferring the load and prior to removing the jack, a lift-off reading shall be made. The lift-off reading shall be within 10 percent of the specified lock-off load. If the load is not within 10 percent of the specified lock-off load, the anchorage shall be reset and another lift-off reading shall be made. This process shall be repeated until the desired lock-off load is obtained. All anchors not tested shall be stressed to the required lockoff load.

H. Cutting of Anchor Rod Protrusions: After an anchor has been accepted by the Engineer the portion of the anchor rod extending beyond the anchorage shall be saw cut and removed. Care shall be taken not to damage the rod or the anchorage.

I. Soil Anchor Load Test Acceptance Criteria:

1. A performance or proof-tested soil anchor with a 10 minute load hold is acceptable if the:
   a. Soil anchor carries the maximum test load with less than 0.04 inch of movement between 1 minute and 10 minutes; and
   b. Total movement at the maximum test load exceeds 80 percent of the theoretical elastic elongation of the unbonded length.
2. A performance or proof-tested soil anchor with a 60 minute load hold is acceptable if the:
   a. Soil anchor carries the maximum test load with a creep rate that does not exceed 0.08 inch/log cycle of time; and
   b. Total movement at the maximum test load exceeds 80 percent of the theoretical elastic elongation of the unbonded length.
3. A creep tested soil anchor is acceptable if the:
   a. Prestressed soil anchor carries the maximum test load with a creep rate that does not exceed 0.08 inch/log cycle of time; and
   b. Total movement at the maximum test load exceeds 80 percent of the theoretical elastic elongation of the unbonded length.
4. If the total movement of the soil anchors at the maximum test load does not exceed 80 percent of the theoretical elastic elongation of the

©COPYRIGHT 2016 CH2M HILL

unbonded length, the Contractor shall replace the prestressed soil anchor at no additional cost to the Owner.

5. Soil anchors which have a creep rate greater than 0.08 inch/log cycle of time can be incorporated in the finished work at a load equal to one-half its failure load. The failure load is the load carried by the soil anchor after the load has been allowed to stabilize for 10 minutes.
6. When a soil anchor does not satisfy the load test acceptance criteria, the Contractor may modify the design and/or the construction procedures. These modifications may include, but are not limited to; installing replacement soil anchors, reducing the design load by increasing the number of soil anchors, modifying the installation methods, increasing the bond length or changing the soil anchor type. Any modification which requires changes to the structure must have prior approval by the Engineer. Any modifications shall be performed at no additional cost to the Owner. No additional contract time shall be allowed for modifications. Retesting of the failed soil anchor shall not be allowed.

J. If creep tests fail or Engineer feels that the system was otherwise not acceptable, abandon anchor systems and start all over with redesign and installation of new anchor system.

END OF SECTION

©COPYRIGHT 2016 CH2M HILL

PART 4 – REFERENCE DOCUMENTS

PART 1 GENERAL

1.01 SOIL INVESTIGATION DATA

A. Investigation: An investigation of subsurface soil conditions and of underwater inspection at the site was authorized by the Owner. These investigation reports are provided "for reference only" and shall not be construed as part of the Contract Documents. The report and boring logs and are provided to the Contractor "For Information Only" and are not a warranty or the accuracy of subsurface or site conditions.

1. Report of Geotechnical Exploration – Zero Duval Seawall – Nutting Engineers, Miami, Florida, dated February 2012, Report No. 126-21.2.
2. Duval Street Seawall Inspection Report by G.M. Selby, WC of Miami, Florida, dated October 2008.

B. Interpretation:

1. The Contractor is expected to examine the site and the above reports and then decide for himself the character of the materials to be encountered.
2. The Owner and Engineer disclaim any responsibility for the accuracy, true location and extent of the soils investigation that has been prepared by others. They further disclaim responsibility for interpretation of the data by the Contractor, as in its projection of soil-bearing values, soil profiles, soil stability, and the presence, level and extent of underground water.

1.02 PERMITS

A. Permits: Environmental Permits have been received by the Owner. These permits are provided for Contractor use. Contractor shall provide all requirements of permit and adhere to the requirements of each.

1. Florida Department of Environmental Protection, Environmental Resource Permit, Permit Number 44-0300867-002, dated September 24, 2013.
2. Department of the Army Permit, Permit Number SAJ-2013-01387 NW-IF, dated November 21, 2013.

B. Interpretation:

1. The Contractor is expected to examine the site and the above reports and then decide for himself the means and methods required to conduct all work including permit requirements.

©COPYRIGHT 2016 CH2M HILL

2. The Owner and Engineer disclaim any responsibility for the accuracy, true location and extent of the soils investigation that has been prepared by others. They further disclaim responsibility for interpretation of the data by the Contractor, as in its projection of soil-bearing values, soil profiles, soil stability, and the presence, level and extent of underground water.

PART 2 PRODUCTS (Not Applicable)

PART 3 EXECUTION

3.01 SUPPLEMENTS

A. The supplements listed below, following "End of Section", is part of this Specification.

1. See reports listed in Article 1.01.A, above.

END OF SECTION

©COPYRIGHT 2016 CH2M HILL

REPORT OF
GEOTECHNICAL EXPLORATION

ZERO DUVAL SEAWALL
TERMINUS OF DUVAL STREET
KEY WEST, FLORIDA

FOR

CH2M HILL
6410 5TH STREET, SUITE 2A
KEY WEST, FLORIDA 33040

PREPARED BY

NUTTING ENGINEERS OF FLORIDA, INC.
2051 NW 112TH AVE, SUITE 126
MIAMI, FLORIDA 33072

ORDER NO. 126.21.2

FEBRUARY 2012

Nutting Engineers
of Florida Inc. | Established 1967
Your Project is Our Commitment

Geotechnical & Construction Materials
Engineering, Testing & Inspection
Environmental Services

Offices throughout the state of Florida

www.nuttingengineers.com info@nuttingengineers.com

Nutting Engineers
of Florida Inc. | Established 1967
Your Project is Our Commitment

2051 N.W. 112th Avenue, Suite 126
Miami, Florida 33172
305-557-3083
Toll Free: 877-NUTTING (688-8464)
Fax: 305-824-8827
Broward 954-941-8700
Palm Beach 561-736-4900
St. Lucie 772-408-1050
www.nuttingengineers.com

Geotechnical and Construction Materials | Engineering, Testing and Inspections | Environmental Services

February 23, 2012

Mr. Andrew Smyth
CH2M Hill
6410 5th Street, Suite 2A
Key West, Florida 33040
Phone: (305) 294-1645
Fax: (305) 294-4913
Email: asmyth@ch2m.com

Subject: Report of Geotechnical Exploration
Zero Duval Seawall
Terminus of Duval St.
Key West, Florida

Dear Mr. Smyth:

Nutting Engineers of Florida, Inc. (NE), has performed a Geotechnical Exploration for the seawall replacement at the above referenced site in Key West, Florida. The purpose of this exploration was to obtain information regarding subsurface conditions at specific test locations in order to provide engineering parameters for the soils as part of the retaining wall design process. This report presents our findings and a brief geotechnical report based upon the information obtained.

PROJECT INFORMATION

We understand that project plans call for the construction of a new sheet pile wall outside of the existing wall. Currently there is an existing bulkhead and large stormwater outfall penetration at the site. The water depth at the site ranges from approximately 9 to 12 feet with a maximum tidal variation of about 4 feet. The existing bulkhead is approximately 54 feet long. As this project is still in the early design stages, details concerning the type walls and construction methods have not been determined. NE should be notified in writing by the client of any changes in the proposed construction along with a request to amend our foundation analysis and/or recommendations within this report as appropriate.

OFFICES
Palm Beach
Miami-Dade
St. Lucie

GENERAL SUBSURFACE CONDITIONS

Subsurface Exploration

NUTTING ENGINEERS OF FLORIDA, INC. was requested to perform two Standard Penetration Test (SPT) borings (ASTM D-1586) to an elevation of -45 feet NGVD. The locations of the test borings are indicated on the Test Boring Location Plan presented in the Appendix of this report. The boring locations were identified in the field using approximate methods and available surface controls. As such the soil boring locations should be considered to be approximate.

Test Boring Results

In general, the test boring on the water side of the existing bulkhead (B-1) revealed a water depth of approximately twelve feet, followed by one foot of loose limestone fragments and trace sand. From approximately thirteen feet to twenty three feet below water surface, the test boring noted very soft silt, followed by soft to medium hard limestone to fifty seven feet (-56 ft., NGVD), the maximum depth explored. We note that the boring was extended due to the very soft silt encountered.

The land side boring (B-2) generally revealed loose to medium dense sand and limestone fragments in varying portions to approximately twelve feet, followed by very soft silt to approximately seventeen feet below grade. Below the silt layer, very soft peat was noted to a depth of approximately twenty two feet, underlain by medium dense sand to approximately thirty three feet below grade. Below this layer, medium hard to hard limestone was observed to a depth of forty five feet (-42 ft., NGVD), the maximum depth explored.

One of the most important characteristics of the limestone formation encountered in this area is the degree of solution. The limestone is often times solufied and filled with unconsolidated sand or silt forming pockets during the geologic past. A detailed description of the soil/rock interlayering is given on the test boring logs in the Appendix.

Generalized Soil Parameters

In order to analyze the loading conditions of seawall elements, the study of soil parameters for each stratum was conducted and obtained from the empirical correlations and our experiences based on the review of the field and lab test data. The parameters obtained include N value, internal friction angle (ϕ), and unit weight.

The following table, Table 1, presents the soil parameters for each stratum as well as generalized subsurface soil profiles as encountered at the proposed structure location. Details regarding the relatively complex interlayering of the subsoils are shown on the Soil Profile Sheet in the Appendix.

General Subsurface Profiles and Soil Parameters
(B-1 & B-2)

Approx. Depth* (Feet)	Soil Description	N-Values (Blows/ft)	Internal Friction Angle ϕ (degrees)	Submerged Unit Weight (pcf)	Consistency and Relative Density
12-13	SAND and LIMESTONE FRAGMENTS	9	30	47	Loose
13-23	SILT and/or PEAT	0-2	28	27	Soft
23-57	LIMESTONE, some fine to coarse sand	11-100+	-	62-67	Soft to Very Hard

*measured from approximate water surface

ANALYSIS AND RECOMMENDATIONS

The sheet piles should be installed in accordance with the local codes and good general practice by a competent sheet piling contractor familiar with local conditions. Rock fragments and/or pinnacles of limestone along with very soft silt and peat should anticipated as part of the seawall. Difficult driving conditions should be anticipated once the soft to very hard limestone is encountered at depths of approximately 23 to 30 feet below the water surface. Discussions should be held between us, the owner, and the piling contractor regarding installation procedures.

In the event sheet piles are installed via vibration, it should be noted that vibratory installation of sheet piles and other construction equipment may cause vibrations that could be felt by persons within nearby buildings and could potentially induce cosmetic damage or structural settlements. Additionally, preexisting settlements may exist within these structures that could be construed to have been caused or worsened by the vibratory equipment after the fact. Pre- and post condition surveys of these structures along with vibration monitoring during installation could be performed to better evaluate this concern. The contractor should exercise due care during the installation with due consideration of potential impacts on existing structures.

Once the design and construction plans are more firmly established, we can provide more detailed input concerning geotechnical considerations for the project. We are available to discuss our findings and recommend discussions be held with us, the specialty contractor, designer and other interested parties as the project progresses.

GENERAL INFORMATION

Our client for this geotechnical evaluation was:

CH2M Hill
6410 5th Street, Suite 2A
Key West, Florida 33040

The contents of this report are for the exclusive use of the client and the City of Key Westfor the purpose of the design package. Information conveyed in this report shall not be used or relied upon by other parties or for other projects without the expressed written consent of Nutting Engineers of Florida, Inc. This report discusses geotechnical considerations for this site based upon observed conditions and our understanding of proposed construction. Environmental issues including (but not limited to), soil and/or groundwater contamination are beyond our scope of service for this project. As such, this report should not be used or relied upon for evaluation of environmental issues.

If conditions are encountered which are not consistent with the findings presented in this report, or if proposed construction is moved from the location investigated, this office shall be notified immediately so that the condition or change can be evaluated and appropriate action taken.

The Geotechnical Engineer warrants that the findings, recommendations, specifications, or professional advice contained herein, have been presented after being prepared in accordance with general accepted professional practice in the field of foundation engineering, soil mechanics and engineering geology. No other warranties are implied or expressed.

We appreciate the opportunity to provide these services for you. If we can be of any further assistance, or if you need additional information, please feel free to contact us.

Sincerely,
NUTTING ENGINEERS OF FLORIDA, INC.

2/23/12

Paul C. Catledge, P.E. #68448
Senior Engineer

Richard C. Wohlfarth, P.E.
Director of Engineering

Appendix: Boring Location Plan
Soil Profiles
Test Boring Logs
Limitations of Liability
Soil Classification Criteria

NUTTING ENGINEERS OF FLORIDA, INC.
ESTABLISHED 1967

ZERO DUVAL SEAWALL
TERMINUS OF DUVAL STREET
KEY WEST, FLORIDA

APPROXIMATE
TEST LOCATIONS

NOT TO SCALE

FIGURE 1

TEST BORING B-1

APPROX. LAT 24.5610°, LONG. 81.8067°
APPROX. WATER DEPTH: 12 FT.

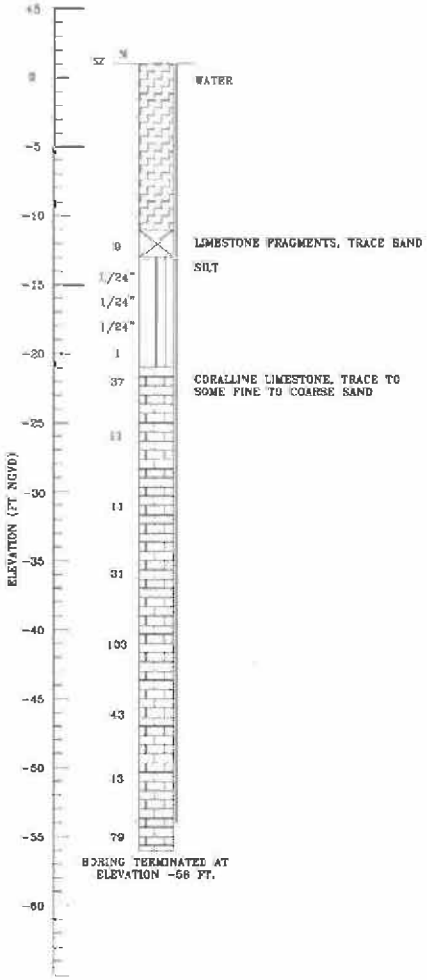

TEST BORING B-2

APPROX. LAT 24.5609°, LONG. 81.8066°
APPROX. WATER DEPTH: N/A

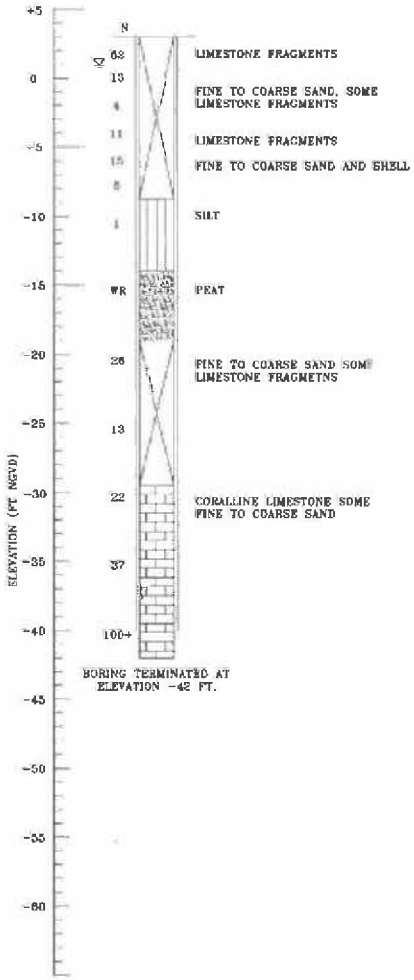

NOTES:

WATER TABLE AT TIME OF DRILLING

7 NUMBERS TO THE LEFT OF BORINGS INDICATE SPT VALUES FOR 1 FOOT PENETRATION

CASING USED

LEGEND

- WATER
- SAND (SP)
- SILT (MP)
- PEAT (OP)
- LIMESTONE

NOT TO SCALE
PROJECT NO. 126.212

SOIL PROFILES

ZERO DUVAL SITE
KEY WEST, FLORIDA

FIGURE 2

NUTTING ENGINEERS OF FLORIDA, INC.
ESTABLISHED 1967

Nutting Engineers of Florida Inc. | Established 1967
Your Project is Our Commitment
1310 Neptune Drive
Boynton Beach, FL 33426
Telephone: 561-736-4900
Fax: 561-737-9975

BORING NUMBER B-1

PROJECT NUMBER 126.21.2
CLIENT CH2M Hill
PROJECT NAME Site 2 - Zero Duval Seawall
PROJECT LOCATION Key West, FL

DATE STARTED 1/21/12 COMPLETED 1/21/12
SURFACE ELEVATION REFERENCE
DRILLING METHOD Standard Penetration Boring
GROUND WATER LEVELS:
LOGGED BY T. Simmons CHECKED BY C. Gworek
AT TIME OF DRILLING ---
APPROXIMATE LOCATION OF BORING As located on site plan

DEPTH (ft)	GRAPHIC LOG	MATERIAL DESCRIPTION	SAMPLE TYPE NUMBER	Blows	N-Value	▲ SPT N VALUE ▲ 10 20 30 40 / PL MC LL 20 40 60 80 / ☐ FINES CONTENT (%) ☐ 20 40 60 80
0		WATER				
5						
10						
		Gray LIMESTONE FRAGMENTS, trace quartz fine SAND	SS 1	5-5-4-1	9	
		Gray SILT				
15			SS 2	1/24"		
			SS 3	1/24"		
			SS 4	1/24"		
20			SS 5	1/12"-1-1		
		Lt. tan porous coralline LIMESTONE, little quartz fine sand, trace brown peat	SS 6	1-20-17-10	37	
25		Lt. tan porous coralline LIMESTONE and silty quartz fine SAND	SS 7	5-7-4	11	
30		Lt. tan porous coralline LIMESTONE, little quartz fine sand	SS 8	4-4-7	11	
35			SS 9	10-17-14	31	
40		-Mud loss -38 to -56 NGVD				

(Continued Next Page)

Disclaimer Nutting Engineers of Florida, Inc. accepts no liability for the consequences of the independent interpretation of drilling logs by others.

TEST NUTTING BOREHOLE 2-126 21 2 CH2M HILL - SITE 2 ZERO DUVAL SEAWALL.GPJ GINT US.GDT 2/23/12

Nutting Engineers of Florida Inc. | Established 1967
Your Project is Our Commitment
1310 Neptune Drive
Boynton Beach, FL 33426
Telephone: 561-736-4900
Fax: 561-737-9975

BORING NUMBER B-1

PROJECT NUMBER 126.21.2

CLIENT CH2M Hill

PROJECT NAME Site 2 - Zero Duval Seawall

PROJECT LOCATION Key West, FL

DEPTH (ft)	GRAPHIC LOG	MATERIAL DESCRIPTION	SAMPLE TYPE NUMBER	Blows	N-Value	▲ SPT N VALUE ▲ 10 20 30 40 / PL MC LL 20 40 60 80 / ☐ FINES CONTENT (%) ☐ 20 40 60 80
40		Lt. tan porous coralline LIMESTONE, trace quartz fine sand	SS 10	53-57-46	103	>>
45			SS 11	21-20-23	43	
50			SS 12	6-6-7	13	
55		-Mud loss -38 to -56 NGVD	SS 13	31-36-43	79	>>
		Boring terminated at -56' NGVD				

TEST NUTTING BOREHOLE 2-126.21.2 CH2M HILL - SITE 2 ZERO DUVAL SEAWALL.GPJ GINT US.GDT 2/23/12

Disclaimer Nutting Engineers of Florida, Inc. accepts no liability for the consequences of the independent interpretation of drilling logs by others.

Nutting Engineers of Florida Inc. | Established 1967
Your Project Is Our Commitment
1310 Neptune Drive
Boynton Beach, FL 33426
Telephone: 561-736-4900
Fax: 561-737-9975

BORING NUMBER B-2

PROJECT NUMBER 126.21.2
CLIENT CH2M Hill
PROJECT NAME Site 2 - Zero Duval Seawall
PROJECT LOCATION Key West, FL

DATE STARTED 1/25/12 COMPLETED 1/25/12
SURFACE ELEVATION REFERENCE +3' NGVD
DRILLING METHOD Standard Penetration Boring
GROUND WATER LEVELS:
LOGGED BY T. Simmons CHECKED BY C. Gworek
∇ AT TIME OF DRILLING 2.0 ft
APPROXIMATE LOCATION OF BORING As located on site plan

DEPTH (ft)	GRAPHIC LOG	MATERIAL DESCRIPTION	SAMPLE TYPE NUMBER	Blows	N-Value
0		Lt. tan coralline LIMESTONE FRAGMENTS	1	23-34-28-31	62
		Lt. gray quartz fine SAND, some limestone fragments	2	24-8-5-2	13
5		Lt. gray silty quartz fine SAND, little limestone fragments	3	2-1-3-3	4
			4	4-3-8-51	11
		Lt. gray coralline LIMESTONE FRAGMENTS			
10		Gray quartz fine SAND and shell	5	23-8-7-8	15
		Lt. tan quartz fine SAND and shell, little limestone fragments	6	7-5-1-1	6
		Gray SILT			
15			7	1-1-0	1
		Brown PEAT			
20			8	WR	
		Lt. tan silty quartz fine SAND, some limestone fragments			
25			9	7-15-11	26
30			10	4-5-8	13
		Lt. tan porous coralline LIMESTONE, some quartz fine sand			
35			11	7-9-13	22
40			12	6-8-29	37

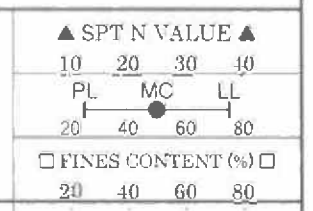

(Continued Next Page)

Disclaimer Nutting Engineers of Florida, Inc. accepts no liability for the consequences of the independent interpretation of drilling logs by others.

TEST NUTTING BOREHOLE 2-126.21.2 CH2M HILL - SITE 2 ZERO DUVAL SEAWALL.GPJ GINT US GDT 2/23/12

Nutting Engineers of Florida Inc. - Established 1967
Your Project is Our Commitment
1310 Neptune Drive
Boynton Beach, FL 33426
Telephone: 561-736-4900
Fax: 561-737-9975

BORING NUMBER B-2

PROJECT NUMBER 126.21.2

CLIENT CH2M Hill

PROJECT NAME Site 2 - Zero Duval Seawall

PROJECT LOCATION Key West, FL

DEPTH (ft)	GRAPHIC LOG	MATERIAL DESCRIPTION	SAMPLE TYPE NUMBER	Blows	N-Value	▲ SPT N VALUE ▲ 10 20 30 40 / PL MC LL 20 40 60 80 / ☐ FINES CONTENT (%) ☐ 20 40 60 80
40		Lt. tan porous coralline LIMESTONE, some quartz fine sand *(continued)*				
			13	50/1"	100+	>>
45		Boring terminated at -42' NGVD				

TEST NUTTING BOREHOLE 2-126.21.2 CH2M HILL SITE 2 ZERO DUVAL SEAWALL.GPJ GINT US.GDT 2/23/12

Disclaimer Nutting Engineers of Florida, Inc. accepts no liability for the consequences of the independent interpretation of drilling logs by others.

LIMITATIONS OF LIABLILITY

WARRANTY

We warranty that the services performed by Nutting Engineers of Florida, Inc. are conducted in a manner consistent with that level of care and skill ordinarily exercised by members of the profession in our area currently practicing under similar conditions at the time our services were performed. ***No other warranties, expressed or implied, are made.*** While the services of Nutting Engineers of Florida, Inc. are a valuable and integral part of the design and construction teams, we do not warrant, guarantee or insure the quality, completeness, or satisfactory performance of designs, construction plans, specifications we have not prepared, nor the ultimate performance of building site materials or assembly/construction.

SUBSURFACE EXPLORATION

Subsurface exploration is normally accomplished by test borings; test pits are sometimes employed. The method of determining the boring location and the surface elevation at the boring is noted in the report. This information is represented in the soil boring logs and/or a drawing. The location and elevation of the borings should be considered accurate only to the degree inherent with the method used and may be approximate.

The soil boring log includes sampling information, description of the materials recovered, approximate depths of boundaries between soil and rock strata as encountered and immediate depth to water data. The log represents conditions recorded specifically at the location where and when the boring was made. Site conditions may vary through time as will subsurface conditions. The boundaries between different soil strata as encountered are indicated at specific depths; however, these depths are in fact approximate and dependent upon the frequency of sampling, nature and consistency of the respective strata. Substantial variation between soil borings may commonly exist in subsurface conditions. Water level readings are made at the time and under conditions stated on the boring logs. Water levels change with time, precipitation, canal level, local well drawdown and other factors. Water level data provided on soil boring logs shall not be relied upon for groundwater based design or construction considerations.

LABORATORY AND FIELD TESTS

Tests are performed in *general* accordance with specific ASTM Standards unless otherwise indicated. All criteria included in a given ASTM Standard are not always required and performed. Each test boring report indicates the measurements and data developed at each specific test location.

ANALYSIS AND RECOMMENDATIONS

The geotechnical report is prepared primarily to aid in the design of site work and structural foundations. Although the information in the report is expected to be sufficient for these purposes, it shall not be utilized to determine the cost of construction nor to stand alone as a construction specification. Contractors shall verify subsurface conditions as may be appropriate prior to undertaking subsurface work.

Report recommendations are based primarily on data from test borings made at the locations shown on the test boring reports. Soil variations commonly exist between boring locations. Such variations may not become evident until construction. Test pits sometimes provide valuable supplemental information that derived from soil borings. If variations are then noted, the geotechnical engineer shall be contacted in writing immediately so that field conditions can be examined and recommendations revised if necessary.

The geotechnical report states our understanding as to the location, dimensions and structural features proposed for the site. ***Any significant changes of the site improvements or site conditions must be communicated in writing to the geotechnical engineer immediately*** so that the geotechnical analysis, conclusions, and recommendations can be reviewed and appropriately adjusted as necessary.

CONSTRUCTION OBSERVATION

Construction observation and testing is an important element of geotechnical services. The geotechnical engineer's field representative (G.E.F.R.) is the "owner's representative" observing the work of the contractor, performing tests and reporting data from such tests and observations. ***The geotechnical engineer's field representative does not direct the contractor's construction means, methods, operations or personnel.*** The G.E.F.R. does not interfere with the relationship between the owner and the contractor and, except as an observer, does not become a substitute owner on site. The G.E.F.R. is responsible for his/her safety, but has no responsibility for the safety of other personnel at the site. The G.E.F.R. is an important member of a team whose responsibility is to observe and test the work being done and report to the owner whether that work is being carried out in general conformance with the plans and specifications. The enclosed report may be relied upon solely by the named client.

SOIL AND ROCK CLASSIFICATION CRITERIA

SAND/SILT

N-VALUE (bpf)	RELATIVE DENSITY
0 – 4	Very Loose
5 – 10	Loose
11 – 29	Medium
30 – 49	Dense
>50	Very dense
100	Refusal

CLAY/SILTY CLAY

N-VALUE (bpf)	UNCONFINED COMP. STRENGTH (tsf)	CONSISTENCY
<2	<0.25	v. Soft
2 – 4	0.25 – 0.50	Soft
5 – 8	0.50 – 1.00	Medium
9 – 15	1.00 – 2.00	Soft
16 – 30	2.00 – 4.00	v. Stiff
>30	>4.00	Hard

ROCK

N-VALUE (bpf)	RELATIVE HARDNESS	ROCK CHARACTERISTICS
N≥ 100	Hard to v. hard	Local rock formations vary in hardness from soft to very hard within short vertical and horizontal distances and often contain vertical solution holes of 3 to 36 inch diameter to varying depths and horizontal solution features. Rock may be brittle to split spoon impact, but more resistant to excavation.
25≤ N ≤ 100	Medium hard to hard	
5≤ N ≤ 25	Soft to medium hard	

PARTICLE SIZE

Boulder	>12 in.
Cobble	3 to 12 in.
Gravel	4.76 mm to 3 in.
Sand	0.074 mm to 4.76 mm
Silt	0.005 mm to 0.074 mm
Clay	<0.005 mm

DESCRIPTION MODIFIERS

0 – 5%	Slight trace
6 – 10%	Trace
11 – 20%	Little
21 – 35%	Some
>35%	And

Major Divisions			Group Symbols	Typical names
Coarse-grained soils (More than half of material is larger than No. 200 sieve size)	Gravels (More than half of coarse fraction is larger than No. 4 sieve size)	Clean gravels (Little or no fines)	GW	Well-graded gravels, gravel-sand mixtures, little or no fines
			GP	Poorly graded gravels, gravel-sand mixtures, little or no fines
		Gravels with fines (Appreciable amount of fines)	GW* d u	Silty gravels, gravel-sand-silt mixtures
			GC	Clayey gravels, gravel-sand-clay mixtures
	Sands (More than half of coarse fraction is smaller than No. 4 sieve size)	Clean sands (Little or no fines)	SW	Well-graded sands, gravelly sands, little or no fines
			SP	Poorly graded sands, gravelly sands, little or no fines
		Sands with fines (Appreciable amount of fines)	SM* d u	Silty sands, sand-silt mixtures
			SC	Clayey sands, sand-clay mixtures
Fine-grained soils (More than half of material is smaller than No. 200 sieve size)	Silts and clays (Liquid limit less than 50)		ML	Inorganic silts and very fine sands, rock flour, silty or clayey fine sands or clayey silts with slight plasticity
			CL	Inorganic clays of low to medium plasticity, gravelly clays, sandy clays, silty clays, lean clays
			OL	Organic silts and organic silty clays of low plasticity
	Silts and clays (Liquid limit greater than 50)		MH	Inorganic silts, micaceous or diatomaceous fine sandy or silty soils, elastic silts
			CH	Inorganic clays of high plasticity, fat clays
			OH	Organic clays of medium to high plasticity, organic silts
	Highly organic soils		PT	Peat and other highly organic soils

Laboratory classification criteria

Determine percentages of sand and gravel from grain-size curve. Depending on percentage of fines (fraction smaller than No. 200 sieve size), coarse-grained soils are classified as follows:

Less than five percent.....GW, GP, SW, SP
More than 12 percent.....GM, GC, SM, SC
5 to 12 percent.....Borderline cases requiring dual systems**

$C_u = \frac{D_{60}}{D_{10}}$ greater than 4; $C_z = \frac{(D_{30})^2}{D_{10} x D_{60}}$ between 1 and 3	
Not meeting all gradation requirements for GW	
Atterberg limits below "A" line or P.I. less than 4	Above "A" line with P.I. between 4 and 7 are borderline cases requiring use of dual symbols.
Atterberg limits above "A" line with P.I. greater than 7	
$C_u = \frac{D_{60}}{D_{10}}$ greater than 6; $C_z = \frac{(D_{30})^2}{D_{10} x D_{60}}$ between 1 and 3	
Not meeting all gradation requirements for SW	
Atterberg limits below "A" line or P.I. less than 4	Limits plotting in hatched zone with P.I. between 4 and 7 are borderline cases requiring use of dual system.
Atterberg limits above "A" line with P.I. more than 7	

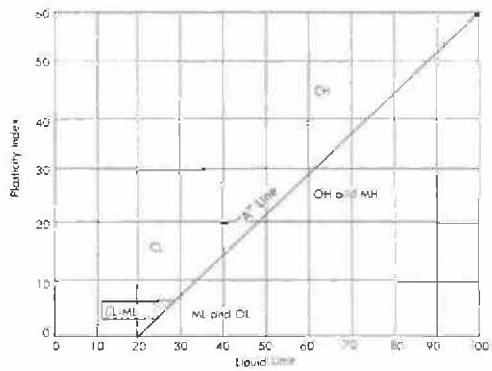

Plasticity Chart

Nutting Engineers of Florida Inc. Established 1967
Your Project is Our Commitment!

G. M. SELBY, Inc.

DUVAL STREET SEAWALL

INSPECTION REPORT

October 2008

6999 North Waterway Drive
Miami, FL 33155

Tel: (305) 262 0715 – (305) 666 5775

Fax: (305) 262 0724

Introduction

G. M. Selby was contracted by the City of Key West to inspect the sea-wall located at the North end of Duval Street.

Selby inspected the site on three different occasions due to low visibility of the water column. No existing plans were found for the seawall, therefore Selby measured out the entire site to locate all necessary utilities and structures for the inspection and subsequent design of a replacement sea wall.

It was reported to Selby engineers that the seawall was not retaining the fill behind the wall. This was confirmed to us by the glass bottom boat Captain that works at the site on a daily basis.

Sea Wall Condition

The seawall is for the most part not failing catastrophically, it is not falling into the water; however at each end (east and west) the engineer found holes and could feel the warm water from the upland seeping thought. This was confirmed when the engineer compared the leakage flow to the flow of the outfall; the outfall flow was measured at one knot flow rate.

In addition, there are remnants of an older seawall which is heavily corroded with sharp protruding edges posing a danger to anyone entering the water under the deck. This oxidizing metal also contributes to an anodic reaction of metal objects such as vessels and other metallic components (bolts fasteners etc).

The outfall pipe located mid span of the seawall, was loose at the wall junction and a portion of its baffle or seal was loose and swaying in the water. Besides the sheet pile showing signs of corrosion, so did the pile cap, which exhibited cracking and discoloration from steel corroding from within.

It is very apparent that during storm events the fill behind the wall escapes via the holes at each end of the wall, thus contributing to the sinking of the road behind the wall at a few locations. At high tide (Spring tide) the water pressure actually causes a backflow and comes out of the inlet on Duval Street causing localized flooding. The engineer also noticed overtopping of the wall during extreme spring tide whereby the flow actually spills over the wall into the street.

On the east side, a pocket is formed where the wall makes a 90 degree turn. This area is prone to a resonance effect when swells are incoming due to boat wakes. This small area encounters the brunt of direct forces and has signs of long term erosion/abrasion. It is also an area where there are signs of water leaking out from the uplands contributing to the loss of fill behind the seawall.

The seawall does not seem to be in any danger of collapse. It has aged and is not functioning correctly as a retaining wall any longer, as such contributing to the sinking effect behind the wall, on the street.

Evaluation of Alternative Solutions

Selby engineers researched the various options to provide a solution to stop the leakage and deterioration of the existing seawall. We analyzed the following solutions:

1. Form a concrete seawall in front of existing wall and pour it in plane using high strength hydraulic marine concrete admixture.
2. Remove existing seawall and replace with a steel sheet piling wall.
3. Patch the wall
4. Install an aluminum sheet pile wall in front of the existing seawall with a hydraulic cement buffer.
5. The drawings depict two solution for the drainage/pollution control chamber before allowing runoff into the adjacent water.

Recommendations

Selby engineers recommend removing the improvements above the wall, demolishing the cap and installing a new aluminum sheet pile wall in front of the existing wall. In addition, the contractor needs to

remove the old steel sheet piling remnants and install a baffle on the east side pocket area in order to dampen the wave energy.

Please see the attached drawings which show the entire new design of the wall, outfall and associated structures.

The other alternative solutions do not warrant consideration either due to logistics (concrete form) or due to unsatisfactory result vs. expenditure (patch). Removing the existing seawall could potentially cause failure of the adjacent upland as well as undermine adjacent structures and as such is ruled out as an option.

Gerald Zadikoff, PE
FL 44206

PHOTOGRAPHIC DOCUMENTATION

Inlet behind the wall not draining, notice the sinking of the brick.
(Low to mid – tide)

View from the east side

View from the west side

Cracks in the Sea Wall Cap

Corroded Steel to be Removed

Old Corroded Steel East End

Area of High Wave Energy East End

Vertical Crack (separation)

Sheet Piling Under Deck

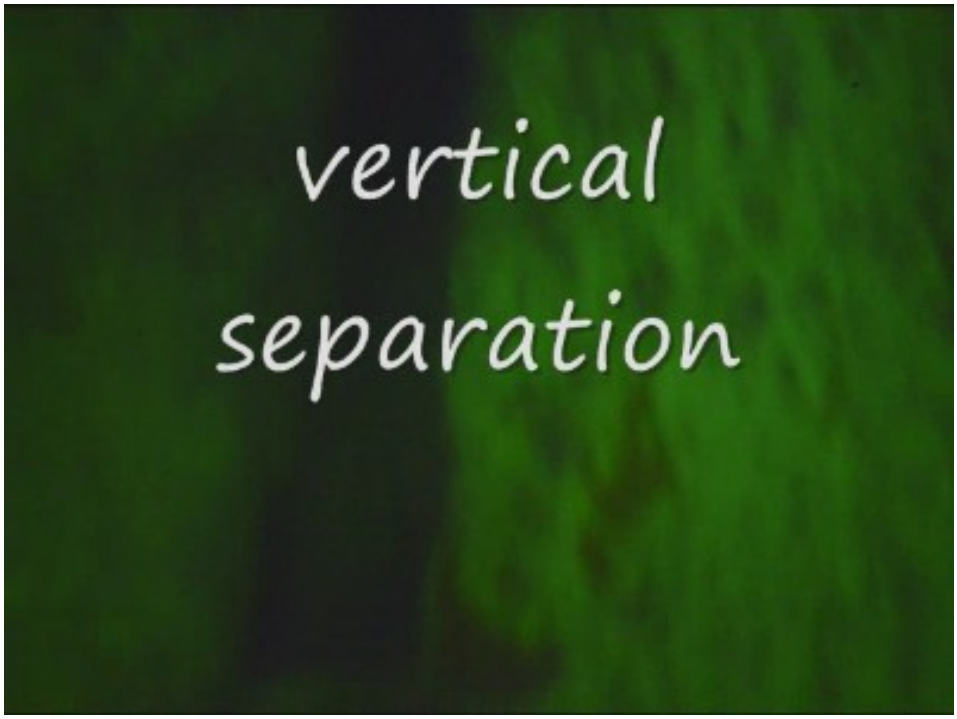

Vertical Separation

Cracks in Concrete Section West End

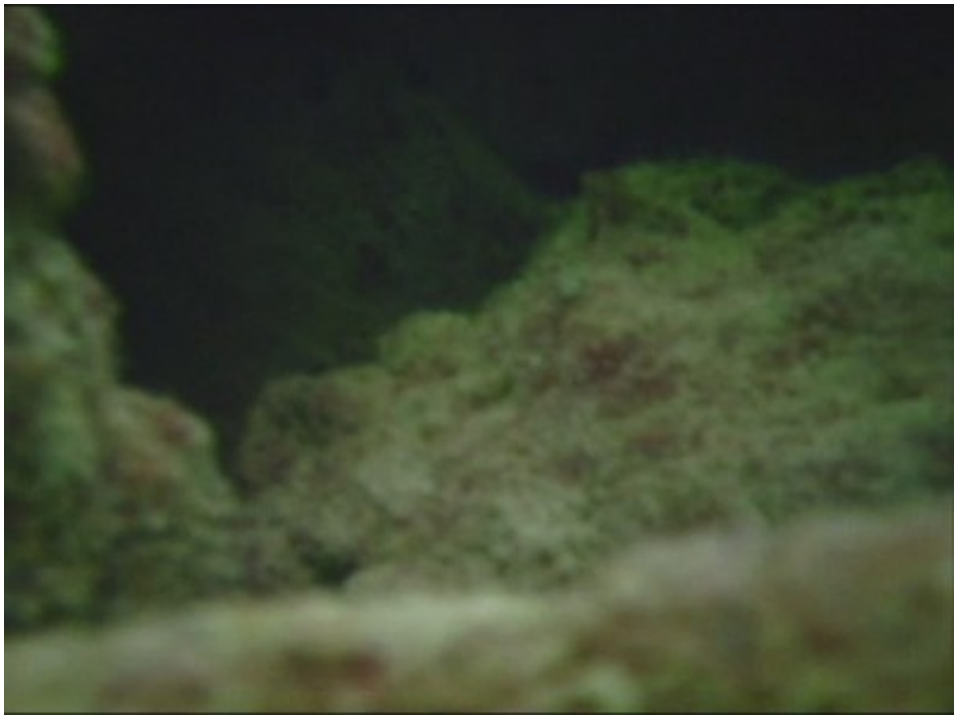

West End Hole

View of Sea Wall and Cap

FLORIDA DEPARTMENT OF ENVIRONMENTAL PROTECTION
South District Branch Office
2796 Overseas Highway, Suite 221
Marathon, FL 33050

RICK SCOTT
GOVERNOR

HERSCHEL T. VINYARD JR.
SECRETARY

VIA ELECTRONIC MAIL

Permittee/Authorized Entity:
City of Key West
3132 Flagler Avenue
Key West, FL 33040

Seawall Repair

Authorized Agent:
CH2M Hill
c/o Benjamin Brice
1101 Channelside Drive, Suite 200 South
Tampa, FL 33602
BBrice@ch2m.com

Environmental Resource Permit
State-owned Submerged Lands Authorization – Granted

U.S. Army Corps of Engineers Authorization – Separate Corps Authorization Required

Permit No.: 44-0300867-002
Lease No. 44026265

Permit Issuance Date: September 24, 2013
Permit Construction Phase Expiration Date: September 24, 2018

Consolidated Environmental Resource Permit and State-owned Submerged Lands Authorization

Permittee: City of Key West
Permit No: 44-0300867-002
Lease No: 44026265

PROJECT LOCATION
The activities authorized by this Permit and state-owned submerged lands authorization are located at 2 Duval Street, Key West, in Section 31, Township 67 South, Range 25 East, Monroe County; Parcel Id. No. 00072082-000400.

AUTHORIZATIONS
Seawall repair

Project Description
The permittee is authorized to repair an existing seawall within Man of War Harbor, a Class III Waterbody. Authorized activities are depicted on the attached drawings.

The project described above may be conducted only in accordance with the terms, conditions and attachments contained in this permit. The issuance of this permit does not infer, nor guarantee, nor imply that future permits or modifications will be granted by the Department.

Please be advised that this permit does not constitute the issuance of a NPDES Stormwater Permit or acceptance of an NPDES Stormwater Pollution Prevention Plan. For additional information regarding this matter please contact the NPDES Stormwater Notices Center toll free at (866) 336-6312 or Department personnel in Tallahassee at (850) 245-7522.

Sovereignty Submerged Lands Authorization
The activity is located on submerged lands owned by the State of Florida. It therefore also requires authorization, from the Board of Trustees of the Internal Improvement Trust Fund (Board of Trustees), pursuant to Article X, Section 11 of the Florida Constitution, and Sections 253.002 Florida Statutes (F.S.) and Chapter 258, F.S.

As staff to the Board of Trustees, the Department has determined that the activity qualifies for a Letter of Consent, as long as the work performed is located within the boundaries as described herein and is consistent with the terms and conditions herein. During the term of this Letter of Consent you shall maintain satisfactory evidence of sufficient upland interest as required by paragraph 18-21.004(3)(b), Florida Administrative Code. If such interest is terminated or the Board of Trustees determines that such interest did not exist on the date of issuance of this Letter of Consent, this

Letter of Consent may be terminated by the Board of Trustees at its sole option. If the Board of Trustees terminates this Letter of Consent, you agree not to assert a claim or defense against the Board of Trustees arising out of this Letter of Consent.

By your acceptance of this Letter of Consent, you agree to be bound by the terms and conditions contained herein.

Federal Authorization
A copy of this permit has been sent to the U.S. Army Corps of Engineers (USACE). The USACE may require a separate permit. Failure to obtain any required federal permits prior to construction could subject you to enforcement action by that agency.

Coastal Zone Management
This permit also constitutes a finding of consistency with Florida's Coastal Zone Management Program, as required by Section 307 of the Coastal Management Act.

Water Quality Certification
This permit constitutes certification of compliance with state water quality standards under Section 401 of the Clean Water Act, 33 U.S.C. 1341.

Other Authorizations
You are advised that authorizations or permits for this project may be required by other federal, state or local entities including but not limited to local governments and homeowner's associations. This permit does not relieve you from the requirements to obtain all other required permits or authorizations.

In addition, you are advised that your project may require additional authorizations or permits from the municipality/county in which the project is located. Please be sure to contact the local county building and environmental department to obtain these required authorizations.

PERMIT/SOVEREIGNTY SUBMERGED LANDS CONDITIONS
The activities described herein must be conducted in accordance with:

- **The Specific Conditions**
- **The General Conditions**
- **The General Consent Conditions for Sovereignty Submerged Lands Authorization**
- **The limits, conditions and locations of work shown in the attached drawings**
- **The term limits of this authorization**

You are advised to read and understand these conditions and drawings prior to commencing the authorized activities, and to ensure the work is conducted in conformance with all the terms, conditions, and drawings. If you are utilizing a contractor, the contractor also should read and understand these conditions and

drawings prior to commencing the authorized activities. Failure to comply with these conditions, including any mitigation requirements, shall constitute grounds for revocation of the Permit and appropriate enforcement action by the Department.

Operation of the facility is not authorized except when determined to be in conformance with all applicable rules and this permit/certification/authorization and sovereignty submerged lands authorization, as specifically described above.

SPECIFIC CONDITIONS

1. All submittals of information required by this permit shall be submitted to the Department's Marathon office at 2796 Overseas Highway, Suite 221, Marathon, Florida 33050.

2. Best management practices for erosion control shall be implemented and maintained at all times to prevent siltation and turbid discharges in excess of State Water Quality Standards, pursuant to Rule 62-302, F.A.C. All practices shall be in accordance with the guidelines and specifications described in the Florida Erosion and Sedimentation Control Inspector's Manual, FDEP (2008), available on the Department's website at http://www.dep.state.fl.us/water/nonpoint/docs/erosion/erosion-inspectors-manual.pdf. Methods shall include, but are not limited to the immediate placement of turbidity containment devices such as turbidity screens, silt containment fences, and earthen berms, etc., to contain any potential erosion or turbidity. Earthen berms shall not impact wetlands or other surface waters as defined by Rule 62-340, F.A.C. Following the completion of construction, the Permittee shall be responsible for the removal of the turbidity barriers and shall correct any erosion or shoaling that has the potential to cause adverse impacts to wetlands or surface waters.

3. The project shall comply with applicable State Water Quality Standards of Chapter 62-302, F.A.C., namely:

62-302.500 – Minimum Criteria for All Waters at All Times and All Places
62-302.530 – Surface Water Quality Criteria

4. **No later than 60 days after construction commencement**, permanent manatee educational signs must be installed by the permittee. In the event the signs fade, become damaged or outdated, they must be replaced and maintained for the life of the facility. The on-site locations and types of signs must be acceptable to the Florida Fish and Wildlife Conservation Commission, which can be contacted at ImperiledSpecies@myfwc.com. The types of signs, sign vendors, and the process for FWC approval can be found at: http://www.myfwc.com/wildlifehabitats/managed/manatee/signs/.

5. All personnel associated with the project shall be instructed about the presence of manatees and manatee speed zones, and the need to avoid collisions with, and injury to manatees. The permittee shall advise all construction personnel that there are civil and criminal penalties for harming, harassing, or killing manatees which are protected under the Marine Mammal Protection Act, the Endangered Species Act, and the Florida Manatee Sanctuary Act.

6. All vessels associated with the construction project shall operate at "Idle Speed/No Wake" at all times while in the immediate area and while in water where the draft of the vessel provides less than a four-foot clearance from the bottom. All vessels shall follow routes of deep water whenever possible.

7. Siltation or turbidity barriers shall be made of material in which manatees cannot become entangled, shall be properly secured, and shall be regularly monitored to avoid manatee entanglement or entrapment. Barriers shall not impede manatee movement.

8. All on-site project personnel are responsible for observing water-related activities for the presence of manatees. All in-water operations, including vessels, shall be shutdown if a manatee comes within 50 feet of the operation. Activities shall not resume until every manatee has moved beyond the 50-foot radius of the project operation, or until 30 minutes has elapsed wherein a manatee has not reappeared within 50 feet of the operation. Animals shall not be herded away or harassed into leaving.

9. Any collision with or injury to a manatee shall be reported immediately to the FWC Hotline at 1-888-404-FWCC. Collision and/or injury should also be reported to the U.S. Fish and Wildlife Service in Jacksonville (1-904-731-3336) for north Florida or Vero Beach (1-772-562-3909) for south Florida.

10. Temporary signs concerning manatees shall be posted prior to and during all in-water project activities. All signs are to be removed by the permittee upon completion of the project. Awareness signs that have already been approved for this use by the Florida Fish and Wildlife Conservation Commission (FWC) must be used. One sign measuring at least 3 ft. by 4 ft. which reads *Caution: Manatee Area* must be posted. A second sign measuring at least 8 1/2" by 11" explaining the requirements for "Idle Speed/No Wake" and the shutdown of in-water operations must be posted in a location prominently visible to all personnel engaged in water-related activities. Please see the Florida Fish and Wildlife Conservation Commission website for information on how to obtain appropriate signs:
http://www.myfwc.com/docs/WildlifeHabitats/Manatee_EducationalSign.pdf

11. In the event discrepancies exist between the permit drawings and the Specific Conditions of this permit, the Specific Conditions shall prevail.

Note: In the event of an emergency, the Permittee should contact the Department by calling (800)320-0519. During normal business hours, the permittee should call (239)344-5600.

GENERAL CONDITIONS:

1. All activities authorized by this permit shall be implemented as set forth in the plans, specifications and performance criteria as approved by this permit. Any deviation from the permitted activity and the conditions for undertaking that activity shall constitute a violation of this permit and a violation of Part IV of Chapter 373, (F.S.).

2. This permit or a copy thereof, complete with all conditions, attachments, exhibits, and modifications shall be kept at the work site of the permitted activity. The complete permit shall be available for review at the work site upon request by the Department staff. The permittee shall require the contractor to review the complete permit prior to commencement of the activity authorized by this permit.

3. Activities approved by this permit shall be conducted in a manner which does not cause violations of state water quality standards. The permittee shall implement best management practices for erosion and pollution control to prevent violations of state water quality standards. Temporary erosion control shall be implemented prior to and during construction and permanent control measures shall be completed within seven (7) days of any construction activity. Turbidity barriers shall be installed and maintained at all locations where the possibility of transferring suspended solids into the receiving water-body exists due to the permitted work. Turbidity barriers shall remain in place at all locations until construction is completed and soils are stabilized and vegetation has been established. All practices shall be in accordance with the guidelines and specifications described in Chapter Six of the Florida Land Development Manual; A Guide to Sound Land and Water Management (Department of Environmental Regulation, 1988), unless a project-specific erosion and sediment control plan is approved as part of the permit. Thereafter, the permittee shall be responsible for the removal of the barriers. The permittee shall correct any erosion or shoaling that causes adverse impacts to the water resources.

4. The permittee shall notify the Department of the anticipated construction start date within thirty (30) days of the date that this permit is issued. **At least forty-eight (48) hours prior** to commencement of the activity authorized by this permit, the permittee shall submit to the Department an "Environmental Resource Permit Construction Commencement" notice (Form No. 62-343.900(3), Florida Administrative Code (F.A.C.)) indicating the actual start date and expected completion date.

5. When the duration of construction will exceed one year, the permittee shall submit construction status reports to the Department on an annual basis utilizing an

"Annual Status Report Form" (Form No. 62-343.900(4), F.A.C.). Status Report Forms shall be submitted the following June of each year.

6. **Within thirty (30) days after completion of construction** of the permitted activity, the permittee shall submit a written statement of completion and certification by a registered professional engineer or other appropriate individual as authorized by law utilizing the supplied "Environmental Resource Permit As-Built Certification by a Registered Professional" (Form No. 62-343.900(5), F.A.C.). The Statement of completion and certification shall be based on on-site observation of construction or review of as-built drawings for the purpose of determining if the work was completed in compliance with permitted plans and specifications. This submittal shall serve to notify the Department that the system is ready for inspection. Additionally, if deviations from the approved drawings are discovered during the certification process, the certification must be accompanied by a copy of the approved permit drawings with deviations note. Both the original and revised specifications must be clearly shown. The plans must be clearly labeled as "as-built" or "record" drawing. All surveyed dimensions and elevations shall be certified by a registered surveyor.

7. The operation phase of this permit shall not become effective; until the permittee has complied with the requirements of condition number six (6) above, has **submitted a "Request for Transfer of Environmental Resource Permit Construction Phase to Operation Phase" (Form 62-343.900(7), F.A.C.);** the Department determines the system to be in compliance with the permitted plans and specifications; and the entity approved by the Department in accordance with Sections 9.0 and 10.0 of the Basis of Review for Environmental Resource Permit Applications Within the South Florida Water Management District—August 1995, accepts responsibility for operation and maintenance of the system. The permit shall not be transferred to such approved operation and maintenance entity until the operation phase of the permit becomes effective. Following inspection and approval of the permitted system by the Department, the permittee shall initiate transfer of permit to the approved responsible operation entity if different from the permittee. Until the permit is transferred pursuant to Rule 62-343.110(1) (d), F.A.C., the permittee shall be liable for compliance with the terms of the permit.

8. Each phase or independent portion of the permitted system must be completed in accordance with the permitted plans and permit conditions prior to the initiation of the permitted use of site infrastructure located within the area served by that portion or phase of the system. Each phase or independent portion of the system must be completed in accordance with the permitted plans and permit conditions prior to transfer of responsibility for operation and maintenance of the phase or portion of the system to a local government or other responsible entity.

9. For those systems that will be operated or maintained by an entity that will require an easement or deed restriction in order to enable that entity to operate or maintain the system in conformance with this permit, such easement or deed restriction must be recorded in the public records and submitted to the Department along with any other final operation and maintenance documents required by Sections 9.0 and 10.0 of the Basis of Review for Environmental Resource Permit Applications Within the South Florida Water Management District—August 1995, prior to lot or unit sales or prior to lot or unit sales or prior to the completion of the system, whichever occurs first. Other documents concerning the establishment and authority of the operation entity must be filed with the Secretary of State where appropriate. For those systems which are proposed to be maintained by the county or municipal entities, final operation and maintenance documents must be received by the Department when maintenance and operation of the system is accepted by the local government entity. Failure to submit the appropriate final documents will result in the permittee remaining liable for carrying out maintenance and operation of the permitted system and any other permit conditions.

10. Should any other regulatory agency require changes to the permitted system, the permittee shall notify the Department in writing of the changes prior to implementation so that a determination can be made whether a permit modification is required.

11. This permit does not eliminate the necessity to obtain any required federal, state, local and special district authorizations prior to the start of any activity approved by this permit. This permit does not convey to the permittee or create in the permittee any property right, or any interest in real property, nor does it authorize any entrance upon or activities on property which is not owned or controlled by the permittee, or convey any rights or privileges other than those specified in the permit and Chapter 40E-4 or Chapter 40E-40, F.A.C.

12. The permittee is hereby advised that Section 253.77, F.S. states that a person may not commence any excavation, construction, or other activity involving the use of sovereign or other lands of the state, the title to which is vested in the Board of Trustees of the Internal Improvement Trust Fund without obtaining the required lease, license, easement, or other form of consent authorizing the proposed use. Therefore, the permittee is responsible for obtaining any necessary authorization from the Board of Trustees prior to commencing activity on sovereignty lands or other state owned lands.

13. The permittee is advised that the rules of the South Florida Water Management District require the permittee to obtain a water use permit from the South Florida Water management District prior to construction dewatering, unless the work qualifies for a general permit pursuant to Rule 40E-20.302(4), F.A.C., also known as the "No Notice" rule.

14. The permittee shall hold and save the Department harmless from any and all damages, claims or liabilities which may arise by reason of the construction, alteration, operation, maintenance, removal, abandonment or use of any system authorized by this permit.

15. Any delineation of the extent of a wetland or other surface water submitted as part of the permit application, including plans or other supporting documentation, shall not be considered binding unless a specific condition of this permit or a formal determination under Section 373.421(2). F.S., provides otherwise.

16. The permittee shall notify the Department in writing within 30 days of any sale, conveyance, or other transfer of ownership or control of a permitted system or the real property on which the permitted system is located. All transfers of ownership or transfers of a permit are subject to the requirements of Rule 62-343.130, F.A.C. The permittee transferring the permit shall remain liable for corrective actions that may be required as a result of any violations prior to the sale, conveyance or other transfer of the system.

17. Upon reasonable notice to the permittee, Department authorized staff with proper identification shall have permission to enter, inspect, sample and test the system to insure conformity with the plans and specifications approved by the permit.

18. If historical or archaeological artifacts are discovered at any time on the project site, the permittee shall immediately notify the appropriate Department office.

19. The permittee shall immediately notify the Department in writing of and previously submitted information that is later discovered to be inaccurate.

GENERAL CONDITIONS FOR SOVEREIGNTY SUBMERGED LANDS AUTHORIZATION

Any use of sovereignty submerged lands is subject to the following general conditions are binding upon the permittee and are enforceable under Chapter 253, F.S., and, as applicable, Chapter 258, F.S.:

1. Sovereignty submerged lands may be used only for the specified activity or use. Any unauthorized deviation from the specified activity or use and the conditions for undertaking that activity or use will constitute a violation. Violation of the authorization shall result in suspension or revocation of the permittee's use of the sovereignty submerged land unless cured to the satisfaction of the Board of Trustees.

2. Authorization under Rule 18-21.005, F.A.C., convey no title to sovereignty submerged land or water column, nor does it constitute recognition or acknowledgment of any other person's title to such land or water.

3. Authorizations under Rule 18-21.005, F.A.C., may be modified, suspended or revoked in accordance with its terms or the remedies provided in Sections 253.04, F.S., and Chapter 18-14, F.A.C.

4. Structures or activities will be constructed and used to avoid or minimize adverse impacts to resources.

5. Construction, use, or operation of the structure or activity will not adversely affect any species which is endangered, threatened or of special concern, as listed in Rules 68A-27.003, 68A-27.004, and 68A-27.005, F.A.C.

6. Structures or activities shall not unreasonably interfere with riparian rights. When a court of competent jurisdiction determines that riparian rights have been unlawfully affected, the structure or activity will be modified in accordance with the court's decision.

7. Structures or activities will not create a navigational hazard.

8. Structures will be maintained in a functional condition and will be repaired or removed if they become dilapidated to such an extent that they are no longer functional.

9. Structures or activities will be constructed, operated, and maintained solely for water dependent purposes.

10. The permittee agrees to indemnify, defend and hold harmless the Board of Trustees and the State of Florida from all claims, actions, lawsuits and demands in any form arising out of the authorization to use sovereignty submerged lands or the permittee's use and construction of structures on sovereignty submerged lands. This duty to indemnify and hold harmless will include any and all liabilities that are associated with the structure or activity including special assessments or taxes that are now or in the future assessed against the structure or activity during the period of the authorization.

11. Failure by the Board of Trustees to enforce any violation of a provision of the authorization or waiver by the Board of Trustees of any provision of the authorization will not invalidate the provision not enforced or waived, nor will the failure to enforce or a waiver prevent the Board of Trustees from enforcing the unenforced or waived provision in the event of a violation of that provision.

12. Permittee binds itself and its successors and assigns to abide by the provisions and conditions set forth in the authorization. If the permittee or its successors or assigns fails or refuses to comply with the provisions and conditions of the authorization, the authorization may be terminated by the Board of Trustees after written notice to the permittee or its successors or assigns. Upon receipt of such notice, the permittee or its successors or assigns will have thirty (30) days in which to correct the violations. Failure to correct the violations within this period will result in the automatic revocation of this authorization.

13. All costs incurred by the Board of Trustees in enforcing the terms and conditions of the authorization will be paid by the permittee. Any notice required by law will be made by certified mail at the address shown on page one of the authorization. The permittee will notify the Board of Trustees in writing of any change of address at least ten days before the change becomes effective.

14. This authorization does not allow any activity prohibited in a conservation easement or restrictive covenant that prohibits the activity.

NOTICE OF RIGHTS

This action is final and effective on the date filed with the Clerk of the Department unless a petition for an administrative hearing is timely filed under Sections 120.569 and 120.57, F.S., before the deadline for filing a petition. On the filing of a timely and sufficient petition, this action will not be final and effective until further order of the Department. Because the administrative hearing process is designed to formulate final agency action, the filing of a petition means that the Department's final action may be different from the position taken by it in this notice.

Petition for Administrative Hearing

A person whose substantial interests are affected by the Department's action may petition for an administrative proceeding (hearing) under Sections 120.569 and 120.57, F.S. Pursuant to Rule 28-106.201, F.A.C., a petition for an administrative hearing must contain the following information:

(a) The name and address of each agency affected and each agency's file or identification number, if known;

(b) The name, address, and telephone number of the petitioner; the name, address, and telephone number of the petitioner's representative, if any, which shall be the address for service purposes during the course of the proceeding; and an explanation of how the petitioner's substantial interests are or will be affected by the agency determination;

(c) A statement of when and how the petitioner received notice of the agency decision;

(d) A statement of all disputed issues of material fact. If there are none, the petition must so indicate;

(e) A concise statement of the ultimate facts alleged, including the specific facts that the petitioner contends warrant reversal or modification of the agency's proposed action; and

(f) A statement of the specific rules or statutes that the petitioner contends require reversal or modification of the agency's proposed action, including an explanation of how the alleged facts relate to the specific rules or statutes; and

(g) A statement of the relief sought by the petitioner, stating precisely the action that the petitioner wishes the agency to take with respect to the agency's proposed action.

The petition must be filed (received by the Clerk) in the Office of General Counsel of the Department at 3900 Commonwealth Boulevard, Mail Station 35, Tallahassee, Florida 32399-3000. Also, a copy of the petition shall be mailed to the permittee at the address indicated above at the time of filing.

Time Period for Filing a Petition

In accordance with Rule 62-110.106(3), F.A.C., petitions for an administrative hearing by the permittee must be filed with 14 days of receipt of this written notice. Petitions filed by any persons other than the permittee, and other than those entitled to written notice under Section 120.60(3), F.S., must be filed within 14 days of publication of the notice or within 14 days of receipt of the written notice, whichever occurs first. Under Section 120.60(3), F.S., however, any person who has asked the Department for notice of agency action may file a petition with 14 days of receipt of such notice, regardless of the date of publication. The failure to file a petition within the appropriate time period shall constitute a waiver of that person's right to request an administrative determination (hearing) under Sections 120.569 and 120.57, F.S., or to intervene in this proceeding and participate as a party to it. Any subsequent intervention (in a proceeding initiated by another party) will be only at the discretion of the presiding officer upon the filing of a motion in compliance with Rule 28-106.205, F.A.C.

Extension of Time

Under Rule 62-110.106(4), F.A.C., a person whose substantial interests are affected by the Department's action may also request an extension of time to file a petition for an administrative hearing. The Department may, for good cause shown, grant the request for an extension of time. Requests for extension of must be filed with the Office of General Counsel of the Department at 3900 Commonwealth Boulevard, Mail Station 35, Tallahassee, Florida 32399-3000, before the applicable deadline for filing a petition for an administrative hearing. A timely request for extension of time shall toll the running of the time period for filing a petition until the request is acted upon.

Mediation
Mediation is not available in this proceeding.

FLAWAC Review
The permittee, or any party within the meaning of Section 373.114(1)(a) or 373.4275, F.S., may also seek appellate review of this order before the Land and Water Adjudicatory Commission under Section 373.114(1) or 373.4275, F.S. Requests for review before the Land and Water Adjudicatory Commission must be filed with the Secretary of the Commission and served on the Department within 20 days from the date when the order is filed with the Clerk of the Department.

Judicial Review
Any party to this action has the right to seek judicial review pursuant to section 120.68, F.S., by filing a Notice of Appeal pursuant to Rules 9.110 and 9.190, Florida Rules of Appellate Procedure, with the Clerk of the Department in the Office of General Counsel, 3900 Commonwealth Boulevard, M.S. 35, Tallahassee, Florida 32399-3000; and by filing a copy of the Notice of Appeal accompanied by the applicable filing fees with the appropriate District Court of Appeal.

[this portion intentionally left blank]

The Notice of Appeal must be filed with 30 days from the date this action is filed with the Clerk of the Department.

Executed in Monroe County, Florida.

STATE OF FLORIDA DEPARTMENT
OF ENVIRONMENTAL PROTECTION

For:_____

Jon M. Iglehart
District Director
South District Office

JMI/ch

Attachments:
Project Drawings, 4 pages
Commencement notice /62-343.900(3)*
Annual status report/62-343.900(4)*
As-built certification/62-343.900(5)*
Inspection certification/62-343.900(6)*
Transfer construction to operation phase/ 62-343.900(7)*
Application for transfer of an ERP permit/62-343.900(8)*
**Can be downloaded at: http://www.dep.state.fl.us/water/wetlands/erp/forms.htm*

Copies furnished to:
U.S. Army Corps of Engineers, Miami /Florida Fish and Wildlife Conservation Commission
Monroe County Property Appraiser
Florida Keys National Marine Sanctuary
Sue Jones & Yanett Langley, FDEP

CERTIFICATE OF SERVICE

The undersigned hereby certifies that this permit and authorization to use sovereignty submerged lands, including all copies, were mailed before the close of business on September 24, 2013, to the above listed persons.

FILING AND ACKNOWLEDGMENT

FILED, on this date, under 120.52(7) of the
Florida Statutes, with the designated Department Clerk,
receipt of which is hereby acknowledged.

Jean B. Murphy
September 24, 2013
Clerk Date

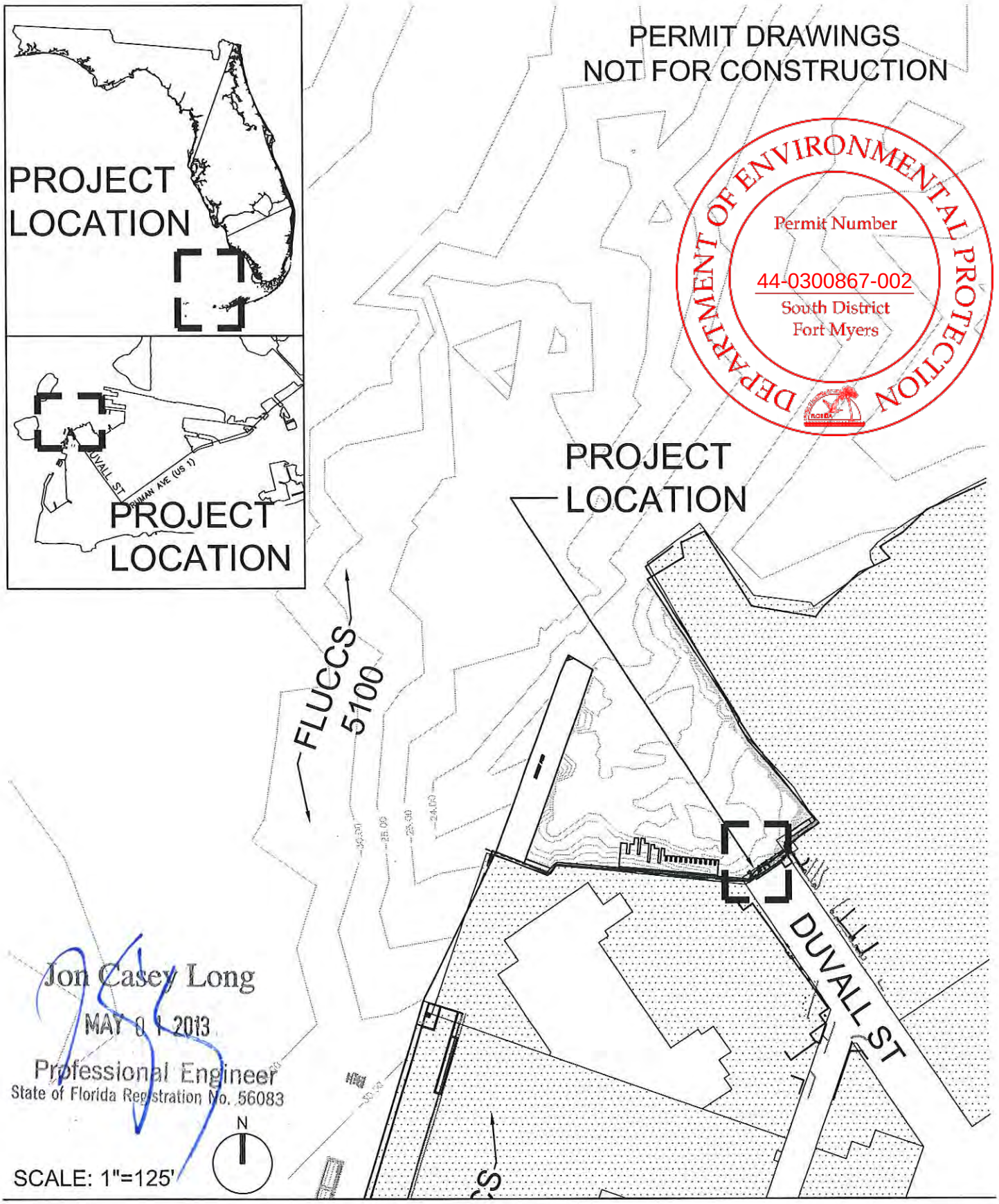

Jon Casey Long
MAY 01 2013
Professional Engineer
State of Florida Registration No. 56083

PLOTTED:	-
TIME:	-
PLOT SCALE:	-
DESIGNED:	-
DRAWN:	-
CHECKED:	-
APPROVED:	-
DATE:	-

Duval Bulkhead Repair
CITY OF KEY WEST
KEY WEST, FLORIDA

PLAN VIEW

CH2MHILL
4350 W Cypress
Suite # 600
Tampa, Florida
33607

JOB No. 439197.B1.01
CAD FILE CAD FILE
SHEET NUMBER P1
SHEET OF

PERMIT DRAWINGS
NOT FOR CONSTRUCTION

DEPARTMENT OF ENVIRONMENTAL PROTECTION
Permit Number
44-0300867-002
South District
Fort Myers

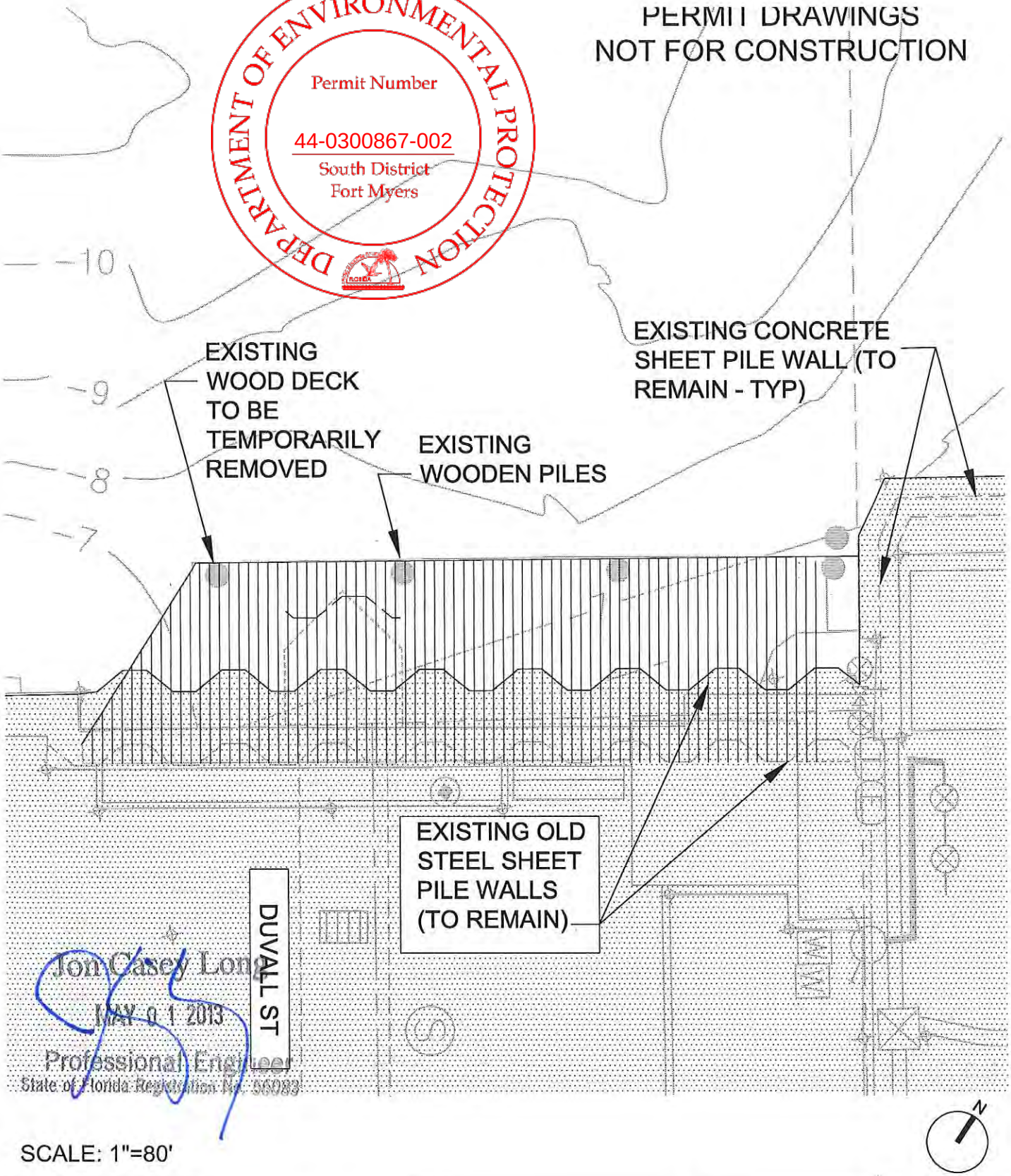

Jon Casey Long
MAY 0 1 2013
Professional Engineer
State of Florida Registration No. 56083

SCALE: 1"=80'

PLOTTED:	–
TIME:	–
PLOT SCALE:	–
DESIGNED:	–
DRAWN:	–
CHECKED:	–
APPROVED:	–
DATE:	–

Duval Bulkhead Repair
CITY OF KEY WEST
KEY WEST, FLORIDA

DUVALL STREET BULKHEAD EXISTING CONDITION

CH2MHILL
4350 W Cypress
Suite # 600
Tampa, Florida
33607

JOB No. 439197.B1.01
CAD FILE CAD FILE
SHEET NUMBER P2
SHEET OF

DEPARTMENT OF ENVIRONMENTAL PROTECTION
Permit Number
44-0300867-002
South District
Fort Myers

PERMIT DRAWINGS
NOT FOR CONSTRUCTION

RECEIVED
AUG 2 2 2013
D.E.P. Marathon

REVISED

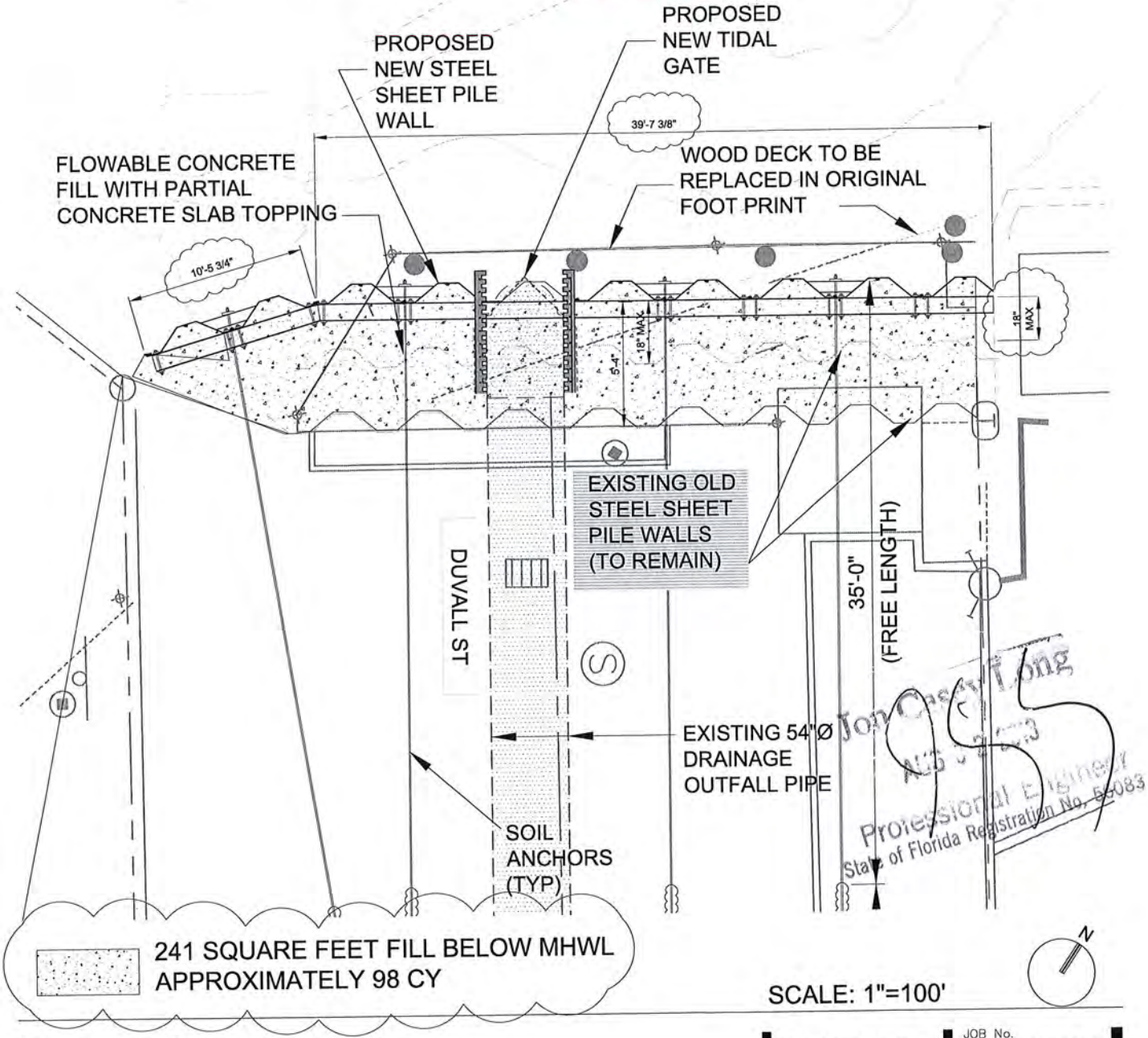

Jon Cresswell Long
Professional Engineer
State of Florida Registration No. 65083

PLOTTED:	–
TIME:	–
PLOT SCALE:	–
DESIGNED:	–
DRAWN:	–
CHECKED:	–
APPROVED:	–
DATE:	–

Duval Bulkhead Repair
CITY OF KEY WEST
KEY WEST, FLORIDA

DUVALL STREET BULKHEAD PLAN VIEW

CH2MHILL
4350 W Cypress
Suite # 600
Tampa, Florida
33607

JOB No. 439197.B1.01
CAD FILE CAD FILE
SHEET NUMBER P3
SHEET OF

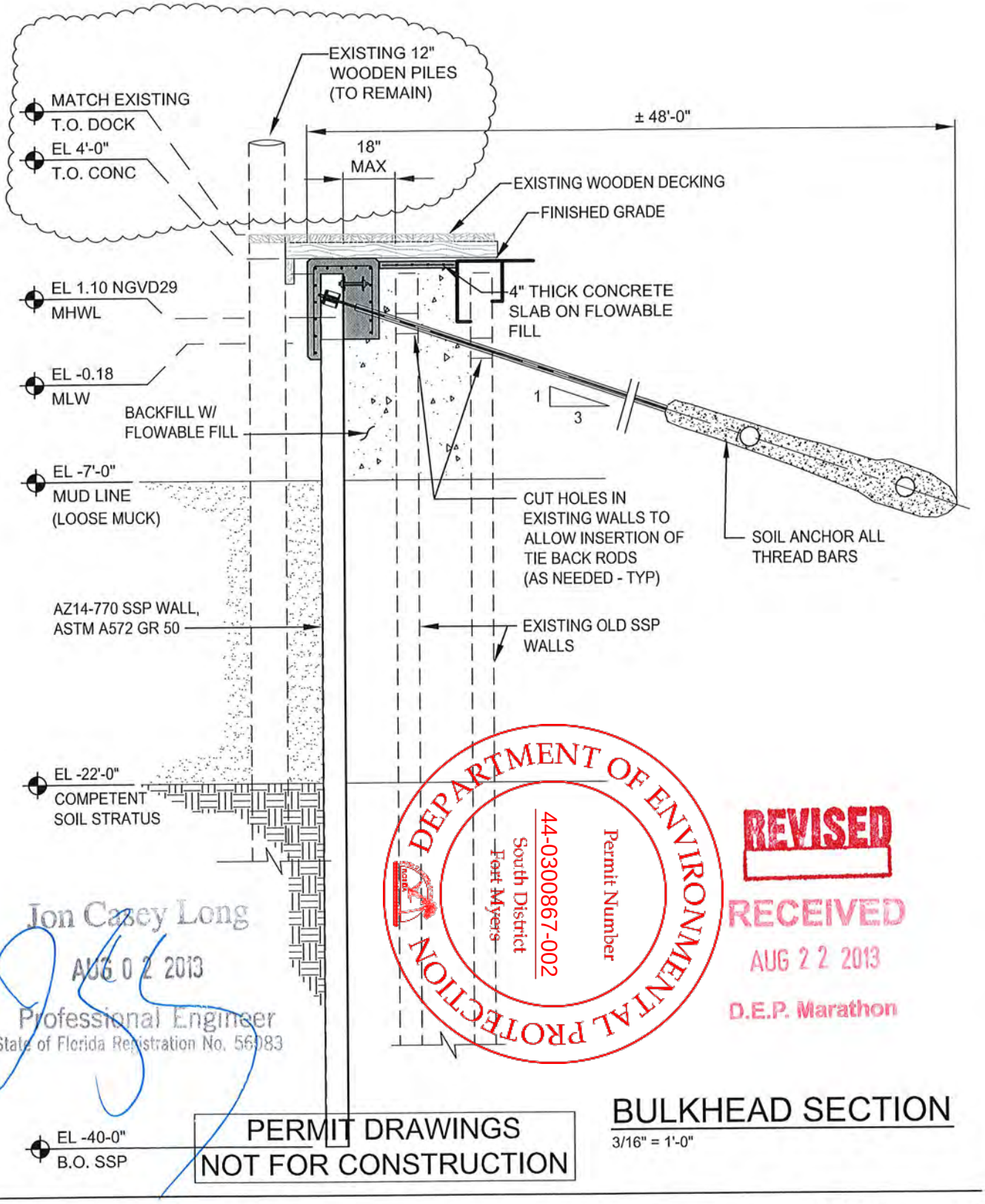

DEPARTMENT OF ENVIRONMENTAL PROTECTION
Permit Number
44-0300867-002
South District
Fort Myers

REVISED
RECEIVED
AUG 2 2 2013
D.E.P. Marathon

Jon Casey Long
AUG 0 2 2013
Professional Engineer
State of Florida Registration No. 56083

PERMIT DRAWINGS
NOT FOR CONSTRUCTION

BULKHEAD SECTION

3/16" = 1'-0"

PLOTTED:	–
TIME:	–
PLOT SCALE:	–
DESIGNED:	–
DRAWN:	–
CHECKED:	–
APPROVED:	–
DATE:	–

Duval Bulkhead Repair
CITY OF KEY WEST
KEY WEST, FLORIDA

DUVALL STREET BULKHEAD SECTION

CH2MHILL
4350 W Cypress
Suite # 600
Tampa, Florida
33607

JOB No. 439197.B1.01
CAD FILE CAD FILE
SHEET NUMBER P4
SHEET OF

DEPARTMENT OF THE ARMY
JACKSONVILLE DISTRICT CORPS OF ENGINEERS
9900 SOUTHWEST 107TH AVENUE, SUITE 203
MIAMI, FLORIDA 33176

REPLY TO
ATTENTION OF

Regulatory Division
South Permits Branch
Miami Permits Section
SAJ-2013-01387 (NW-IF)

NOV 21 2013

City of Key West
c/o Bogdan Vitas Jr., City Manager
3132 Flagler Ave
Key West, FL 33040

Dear Mr. Bogdan:

The U.S. Army Corps of Engineers (Corps) assigned your application for a Department of the Army (DA) permit, which the Corps received on May 10, 2013, the file number SAJ-2013-01387 (NW-IF). A review of the information and drawings provided indicates that the proposed work would result in the repair/rehabilitation of an existing, dilapidated steel sheetpile bulkhead; specifically, to remove the deckboards and stringers associated with an existing marginal wood dock (dock support piles will remain in-place); to install 50 linear feet of new cantilevered steel king sheetpile bulkhead and associated concrete cap 18 inches waterward of the original dilapidated bulkhead; place 98 cubic yards of backfill within a 241 square-foot area landward of the new bulkhead; replace the marginal dock deckboards and stringers within the previously existing footprint after the new bulkhead is installed; and temporarily deploy turbidity curtains for the duration of all in-water activities.

The project is located at the northern end of Duval Street adjacent to the Man of War Harbor at 402 Wall Street; in Section 31, Township 67 South, Range 25 East in Key West, Monroe County, Florida 33041 (SSLL# 44026265).

Your project, as depicted on the enclosed drawings, is authorized by Nationwide Permit (NWP) Number 3. In addition, project specific conditions have been enclosed. This verification is valid until **March 18, 2017**. Furthermore, if you commence or are under contract to commence this activity before the date that the relevant nationwide permit is modified or revoked, you will have 12 months from the date of the modification or revocation of the NWP to complete the activity under the present terms and conditions of this nationwide permit. Please access the U.S. Army Corps of Engineers, Jacksonville District's Regulatory Internet page to access Internet links to view the Final Nationwide Permits, Federal Register Vol. 77, dated February 21, 2012, specifically pages 10270 – 10290, the Corrections to the Final Nationwide Permits, Federal Register 77, March 19, 2012, and the List of Regional Conditions. The Internet page address is:

http://www.saj.usace.army.mil/Missions/Regulatory.aspx

Please be aware this Internet address is case sensitive and should be entered as it appears above. Once there you will need to click on "Source Book"; and, then click on "Nationwide Permits." These files contain the description of the Nationwide Permit authorization, the Nationwide Permit general conditions, and the regional conditions, which apply specifically to this verification for NWP 3. Enclosed is a list of the six General Conditions, which apply to all DA authorizations. You must comply with all of the special and general conditions and any project specific condition of this authorization or you may be subject to enforcement action. In the event you have not completed construction of your project within the specified time limit, a separate application or re-verification may be required.

The following special conditions are included with this verification:

1. **Self-Certification:** Within 60 days of completion of the work authorized, the attached *Self-Certification Statement of Compliance* must be completed and submitted to the U.S. Army Corps of Engineers. Mail the completed form to the Regulatory Division, Special Projects and Enforcement Branch, 9900 Southwest 107th Avenue, Suite 203, Miami, Florida 33176. The Permittee shall reference this permit number, SAJ-2013-01387 (NW-IF), on all submittals.

2. **Best Management Practices:** Environmental controls and best management practices must be implemented to properly contain construction materials and prevent fugitive particulates from entering surrounding waters during the construction of the project.

3. **Manatee Conditions:** The Permittee shall comply with the "Standard Manatee Conditions for In-Water Work – 2011," attached to this permit.

4. **Sea Turtle and Smalltooth Sawfish Conditions:** The Permittee shall comply with National Marine Fisheries Service's "Sea Turtle and Smalltooth Sawfish Construction Conditions," dated March 23, 2006, attached to this permit.

5. Posting of permit: The Permittee shall ensure that all contractors, sub-contractors, and entities associated with the implementation of the project review, understand, and comply with the approved plans and special conditions made part of this permit. Complete copies of the permit and approved plans shall be available at the construction site at all times. Failure to comply with the approved plans and permit special conditions may subject the Permittee to enforcement action.

6. Florida Fish and Wildlife Conservation Commission (FWC) Condition: No later than 60 days after construction commencement, permanent manatee educational signs must be installed by the permittee/lessee. In the event the signs fade, become damaged or outdated, they must be replaced and maintained for the life of the facility. The on-site locations and types of signs must be acceptable to the FWC, which should be contacted at ImperiledSpecies@myfwc.com <mailto:ImperiledSpecies@myfwc.com> . The types of signs, sign vendors, and the process for FWC approval can be found at: http://www.myfwc.com/wildlifehabitats/managed/manatee/signs/.

7. Cultural Resources/Historic Properties:

a. No structure or work shall adversely affect impact or disturb properties listed in the National Register of Historic Places (NRHP) or those eligible for inclusion in the NRHP.

b. If during the ground disturbing activities and construction work within the permit area, there are archaeological/cultural materials encountered which were not the subject of a previous cultural resources assessment survey (and which shall include, but not be limited to: pottery, modified shell, flora, fauna, human remains, ceramics, stone tools or metal implements, dugout canoes, evidence of structures or any other physical remains that could be associated with Native American cultures or early colonial or American settlement), the Permittee shall immediately stop all work and ground-disturbing activities within a 100-meter diameter of the discovery and notify the Corps within the same business day (8 hours). The Corps shall then notify the Florida State Historic Preservation Officer (SHPO) and the appropriate Tribal Historic Preservation Officer(s) (THPO(s)) to assess the significance of the discovery and devise appropriate actions.

c. Additional cultural resources assessments may be required of the permit area in the case of unanticipated discoveries as referenced in accordance with the above Special Condition ; and if deemed necessary by the SHPO, THPO(s), or Corps, in accordance with 36 CFR 800 or 33 CFR 325, Appendix C (5). Based, on the circumstances of the discovery, equity to all parties, and considerations of the public interest, the Corps may modify, suspend or revoke the permit in accordance with 33 CFR Part 325.7. Such activity shall not resume on non-federal lands without written authorization from the SHPO for finds under his or her jurisdiction, and from the Corps.

d. In the unlikely event that unmarked human remains are identified on non-federal lands, they will be treated in accordance with Section 872.05 Florida Statutes. All work and ground disturbing activities within a 100-meter diameter of the unmarked human remains shall immediately cease and the Permittee shall immediately notify the medical examiner, Corps, and State Archeologist within the same business day (8-hours). The Corps shall then notify the appropriate SHPO and THPO(s). Based, on the circumstances of the discovery, equity to all parties, and considerations of the public interest, the Corps may modify, suspend or revoke the permit in accordance with 33 CFR Part 325.7. Such activity shall not resume without written authorization from the State Archeologist and from the Corps.

8. Regulatory Agency Changes: Should any other regulatory agency require changes to the work authorized or obligated by this permit, the Permittee is advised that a modification to this permit instrument is required prior to initiation of those changes. It is the Permittee's responsibility to request a modification of this permit from the Miami Regulatory Office.

This letter of authorization does not include conditions that would prevent the 'take' of a state-listed fish or wildlife species. These species are protected under sec. 379.411, Florida Statutes, and listed under Rule 68A-27, Florida Administrative Code. With regard to fish and wildlife

species designated as species of special concern or threatened by the State of Florida, you are responsible for coordinating directly with the Florida Fish and Wildlife Conservation Commission (FWC). You can visit the FWC license and permitting webpage (http://www.myfwc.com/license/wildlife/) for more information, including a list of those fish and wildlife species designated as species of special concern or threatened. The Florida Natural Areas Inventory (http://www.fnai.org/) also maintains updated lists, by county, of documented occurrences of those species.

This letter of authorization does not give absolute Federal authority to perform the work as specified on your application. The proposed work may be subject to local building restrictions mandated by the National Flood Insurance Program. You should contact your local office that issues building permits to determine if your site is located in a flood-prone area, and if you must comply with the local building requirements mandated by the National Flood Insurance Program.

If you are unable to access the internet or require a hardcopy of any of the conditions, limitations, or expiration date for the above referenced NWP, please contact Ivan Fannin by telephone at 305-779-6053.

Thank you for your cooperation with our permit program. The Corps Jacksonville District Regulatory Division is committed to improving service to our customers. We strive to perform our duty in a friendly and timely manner while working to preserve our environment. We invite you to visit http://per2.nwp.usace.army.mil/survey.html and complete our automated Customer Service Survey. Your input is appreciated – favorable or otherwise. Again, please be aware this Internet address is case sensitive and should be entered as it appears above.

Sincerely,

Ivan Fannin
Project Manager

Enclosures:

1. General Conditions
2. Standard Manatee Conditions for In-Water Work
3. Sea Turtle and Smalltooth Sawfish Construction Conditions
4. Self-Certification
5. ACOE site plans date-stamped 11/21/2013
6. Transfer Request

Copy/ies Furnished:

1. Benjamin Brice, CH2M Hill, agent (email)
2. CESAJ-RD-PE

GENERAL CONDITIONS
33 CFR PART 320-330
PUBLISHED FEDERAL REGISTER DATED 13 NOVEMBER 1986

1. The time limit for completing the work authorized ends on **March 18, 2017**. If you find that you need more time to complete the authorized activity, submit your request for a time extension to this office for consideration at least one month before the above date is reached.

2. You must maintain the activity authorized by this permit in good condition and in conformance with the terms and conditions of this permit. You are not relieved of this requirement if you abandon the permitted activity, although you may make a good faith transfer to a third party in compliance with General Condition 4 below. Should you wish to cease to maintain the authorized activity or should you desire to abandon it without a good faith transfer, you must obtain a modification of this permit from this office, which may require restoration of the area.

3. If you discover any previously unknown historic or archeological remains while accomplishing the activity authorized by this permit, you must immediately notify this office of what you have found. We will initiate the Federal and state coordination required to determine if the remains warrant a recovery effort of if the site is eligible for listing in the National Register of Historic Places.

4. If you sell the property associated with this permit you must obtain the signature of the new owner in the space provided and forward a copy of the permit to this office to validate the transfer of this authorization.

5. If a conditioned water quality certification has been issued for your project, you must comply with the conditions specified in the certification as special conditions to this permit. For your convenience, a copy of the certification is attached if it contains such conditions.

6. You must allow a representative from this office to inspect the authorized activity at any time deemed necessary to ensure that it is being or has been accomplished in accordance with the terms and conditions of your permit.

STANDARD MANATEE CONDITIONS FOR IN-WATER WORK

2011

The permittee shall comply with the following conditions intended to protect manatees from direct project effects:

a. All personnel associated with the project shall be instructed about the presence of manatees and manatee speed zones, and the need to avoid collisions with and injury to manatees. The permittee shall advise all construction personnel that there are civil and criminal penalties for harming, harassing, or killing manatees which are protected under the Marine Mammal Protection Act, the Endangered Species Act, and the Florida Manatee Sanctuary Act.

b. All vessels associated with the construction project shall operate at "Idle Speed/No Wake" at all times while in the immediate area and while in water where the draft of the vessel provides less than a four-foot clearance from the bottom. All vessels will follow routes of deep water whenever possible.

c. Siltation or turbidity barriers shall be made of material in which manatees cannot become entangled, shall be properly secured, and shall be regularly monitored to avoid manatee entanglement or entrapment. Barriers must not impede manatee movement.

d. All on-site project personnel are responsible for observing water-related activities for the presence of manatee(s). All in-water operations, including vessels, must be shutdown if a manatee(s) comes within 50 feet of the operation. Activities will not resume until the manatee(s) has moved beyond the 50-foot radius of the project operation, or until 30 minutes elapses if the manatee(s) has not reappeared within 50 feet of the operation. Animals must not be herded away or harassed into leaving.

e. Any collision with or injury to a manatee shall be reported immediately to the Florida Fish and Wildlife Conservation Commission (FWC) Hotline at 1-888-404-3922. Collision and/or injury should also be reported to the U.S. Fish and Wildlife Service in Jacksonville (1-904-731-3336) for north Florida or Vero Beach (1-772-562-3909) for south Florida, and to FWC at ImperiledSpecies@myFWC.com

f. Temporary signs concerning manatees shall be posted prior to and during all in-water project activities. All signs are to be removed by the permittee upon completion of the project. Temporary signs that have already been approved for this use by the FWC must be used. One sign which reads *Caution: Boaters* must be posted. A second sign measuring at least 8 ½" by 11" explaining the requirements for "Idle Speed/No Wake" and the shut down of in-water operations must be posted in a location prominently visible to all personnel engaged in water-related activities. These signs can be viewed at MyFWC.com/manatee. Questions concerning these signs can be sent to the email address listed above.

CAUTION: MANATEE HABITAT

All project vessels

IDLE SPEED / NO WAKE

When a manatee is within 50 feet of work
all in-water activities must

SHUT DOWN

Report any collision with or injury to a manatee:

Wildlife Alert:

1-888-404-FWCC(3922)

cell *FWC or #FWC

UNITED STATES DEPARTMENT OF COMMERCE
National Oceanic and Atmospheric Administration
NATIONAL MARINE FISHERIES SERVICE
Southeast Regional Office
263 13th Avenue South
St. Petersburg, FL 33701

SEA TURTLE AND SMALLTOOTH SAWFISH CONSTRUCTION CONDITIONS

The permittee shall comply with the following protected species construction conditions:

a. The permittee shall instruct all personnel associated with the project of the potential presence of these species and the need to avoid collisions with sea turtles and smalltooth sawfish. All construction personnel are responsible for observing water-related activities for the presence of these species.

b. The permittee shall advise all construction personnel that there are civil and criminal penalties for harming, harassing, or killing sea turtles or smalltooth sawfish, which are protected under the Endangered Species Act of 1973.

c. Siltation barriers shall be made of material in which a sea turtle or smalltooth sawfish cannot become entangled, be properly secured, and be regularly monitored to avoid protected species entrapment. Barriers may not block sea turtle or smalltooth sawfish entry to or exit from designated critical habitat without prior agreement from the National Marine Fisheries Service's Protected Resources Division, St. Petersburg, Florida.

d. All vessels associated with the construction project shall operate at "no wake/idle" speeds at all times while in the construction area and while in water depths where the draft of the vessel provides less than a four-foot clearance from the bottom. All vessels will preferentially follow deep-water routes (e.g., marked channels) whenever possible.

e. If a sea turtle or smalltooth sawfish is seen within 100 yards of the active daily construction/dredging operation or vessel movement, all appropriate precautions shall be implemented to ensure its protection. These precautions shall include cessation of operation of any moving equipment closer than 50 feet of a sea turtle or smalltooth sawfish. Operation of any mechanical construction equipment shall cease immediately if a sea turtle or smalltooth sawfish is seen within a 50-ft radius of the equipment. Activities may not resume until the protected species has departed the project area of its own volition.

f. Any collision with and/or injury to a sea turtle or smalltooth sawfish shall be reported immediately to the National Marine Fisheries Service's Protected Resources Division (727-824-5312) and the local authorized sea turtle stranding/rescue organization.

g. Any special construction conditions, required of your specific project, outside these general conditions, if applicable, will be addressed in the primary consultation.

Revised: March 23, 2006
O:\forms\Sea Turtle and Smalltooth Sawfish Construction Conditions.doc

SELF-CERTIFICATION STATEMENT OF COMPLIANCE

Permit Number: SAJ-2013-01387 (NW-IF)

Permittee's Name & Address (please print or type): _____

_____

_____

Telephone Number: _____

Location of the Work: _____

_____

Date Work Started: _____ Date Work Completed: _____

Description of the Work (e.g. bank stabilization, residential or commercial filling, docks, dredging, etc.):

_____

_____

_____

Acreage or Square Feet of Impacts to Waters of the United States: _____

Describe Mitigation completed (if applicable): _____

_____

_____

Describe any Deviations from the Permit (attach drawing(s) depicting the deviations):

_____

_____

I certify that all work, and mitigation (if applicable), was done in accordance with the limitations and conditions as described in the permit. Any deviations as described above are depicted on the attached drawing(s).

_____
Signature of Permittee

_____
Date

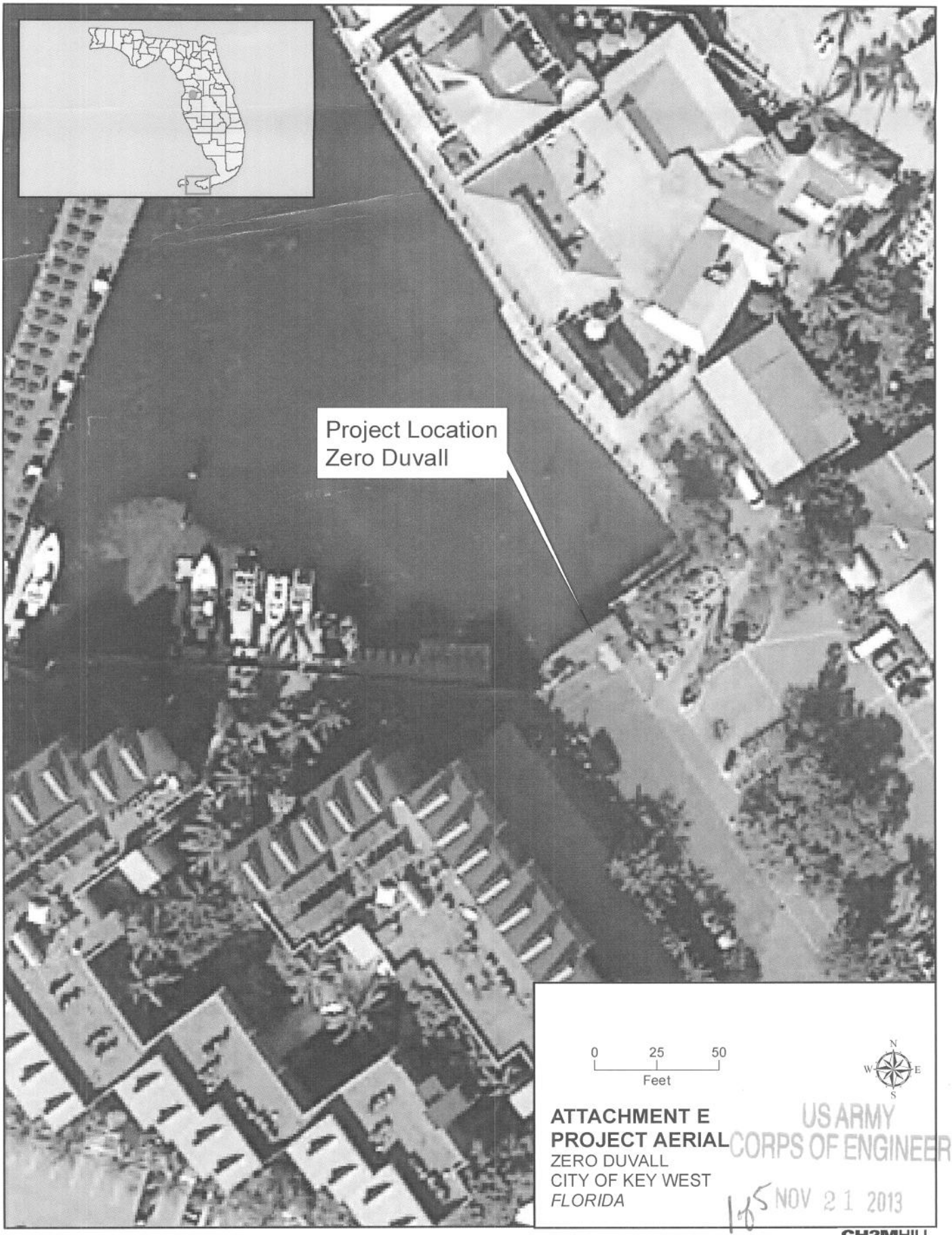

ATTACHMENT E
PROJECT AERIAL
ZERO DUVALL
CITY OF KEY WEST
FLORIDA

US ARMY
CORPS OF ENGINEERS
1 of 5 NOV 21 2013

CH2MHILL

MIAMI REGULATORY OFFICE
COE #: 2013-01387
PROJECT MANAGER: IWF

PERMIT DRAWINGS
NOT FOR CONSTRUCTION

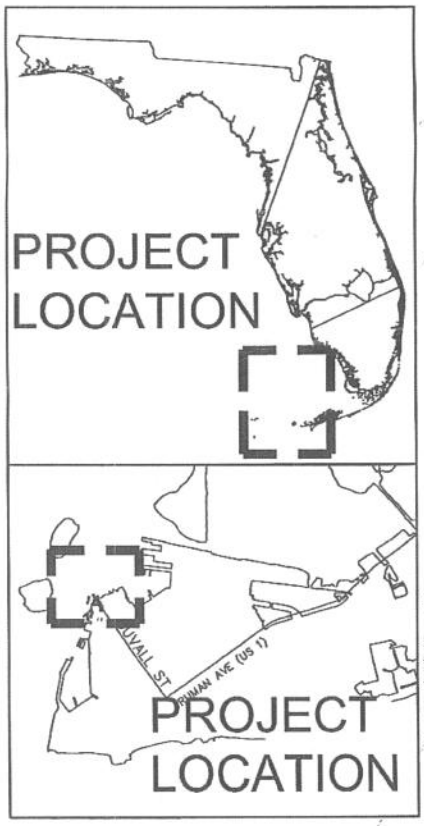

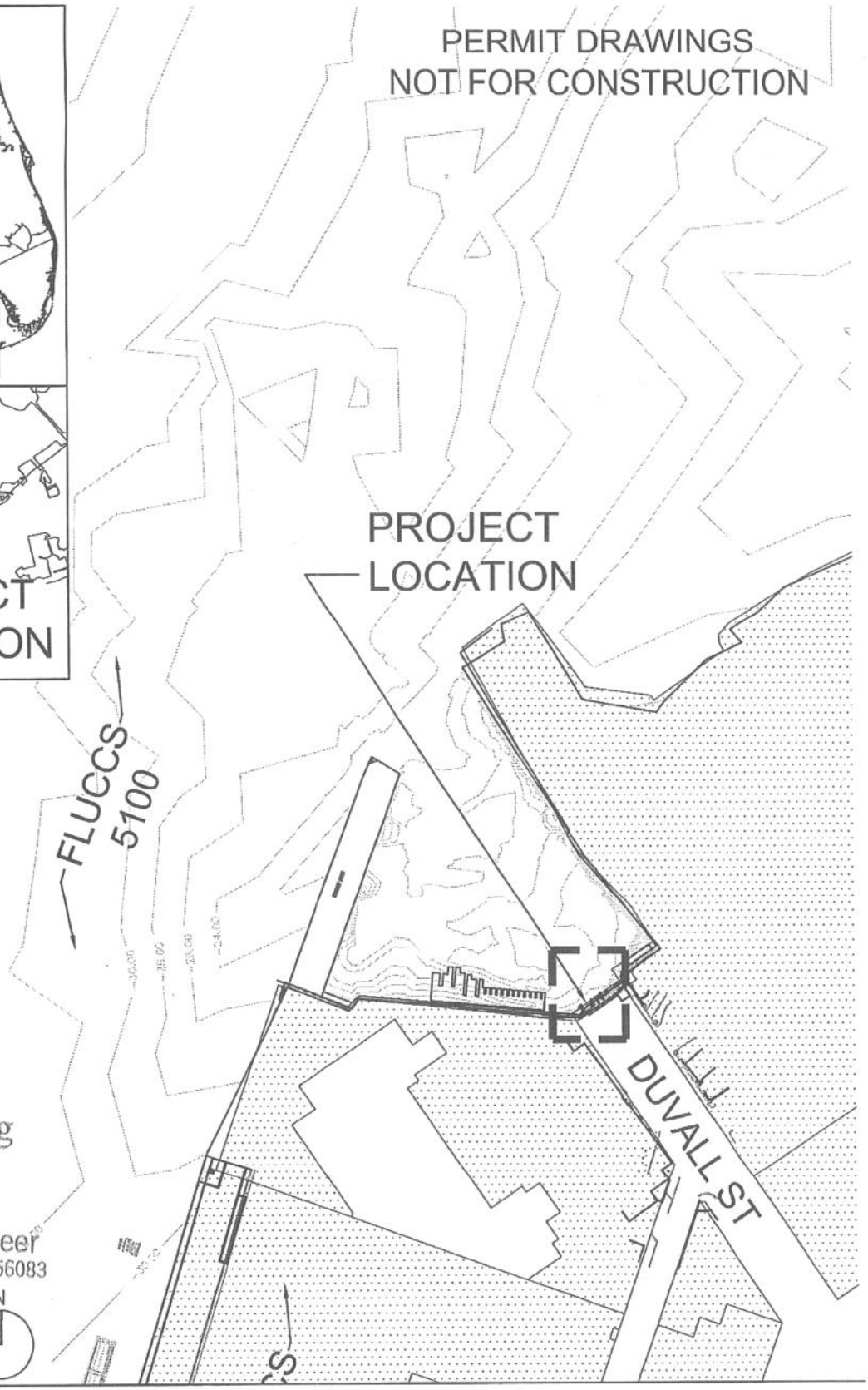

US ARMY
CORPS OF ENGINEERS
NOV 21 2013
MIAMI REGULATORY OFFICE
COE #: 2013-01387
PROJECT MANAGER: JLF

Jon Casey Long
MAY 01 2013
Professional Engineer
State of Florida Registration No. 56083

N

SCALE: 1"=125'

PLOTTED:	-
TIME:	-
PLOT SCALE:	-
DESIGNED:	-
DRAWN:	-
CHECKED:	-
APPROVED:	-
DATE:	-

Duval Bulkhead Repair
CITY OF KEY WEST
KEY WEST, FLORIDA

PLAN VIEW

CH2MHILL
4350 W Cypress
Suite # 600
Tampa, Florida
33607

JOB No. 439197.B1.01
CAD FILE CAD FILE
SHEET NUMBER P1
SHEET OF

PERMIT DRAWINGS
NOT FOR CONSTRUCTION

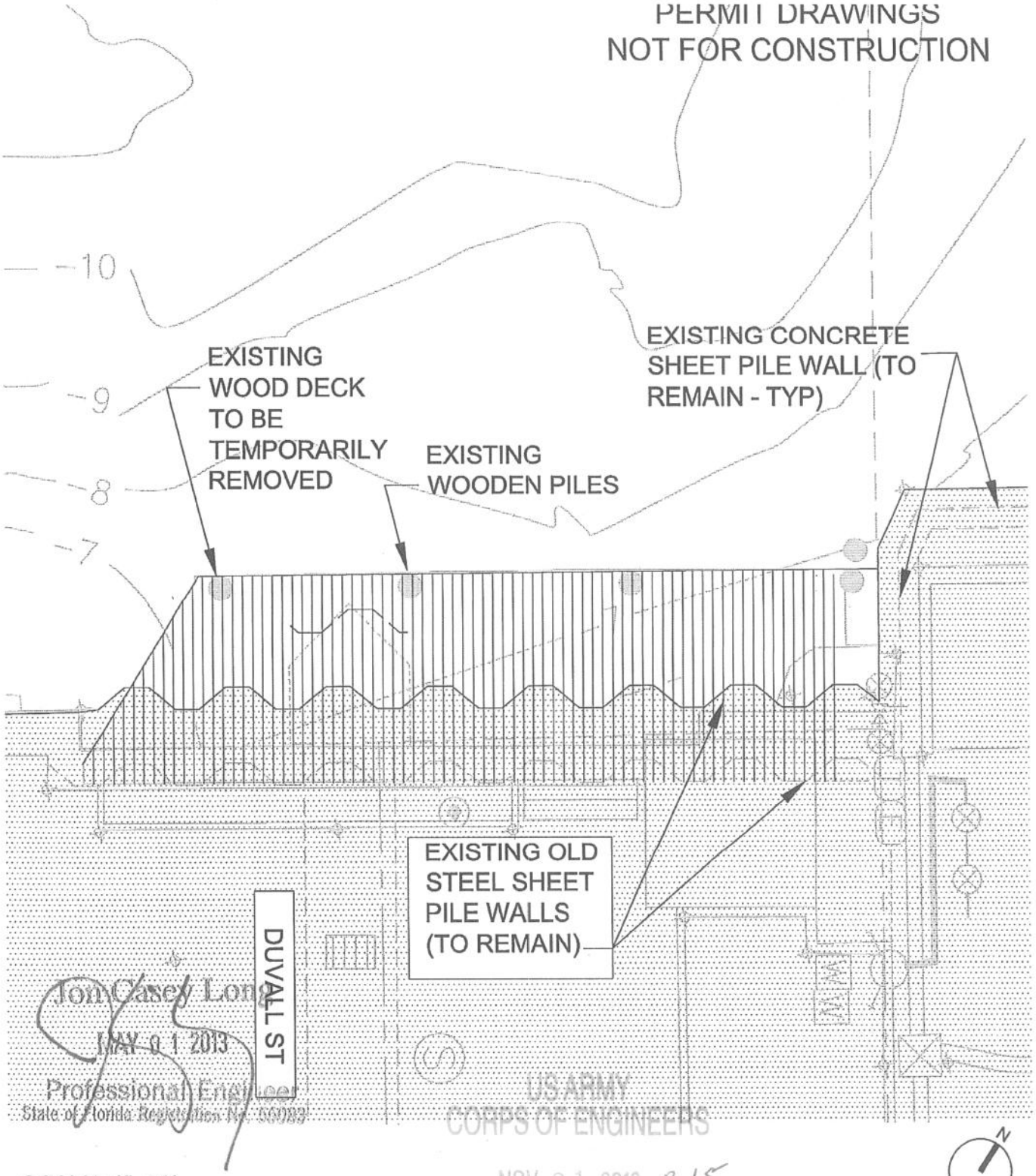

Tom Casey Long
MAY 01 2013
Professional Engineer
State of Florida Registration No. 56032

US ARMY
CORPS OF ENGINEERS
NOV 21 2013 3 of 5

SCALE: 1"=80'

PLOTTED:	–
TIME:	–
PLOT SCALE:	–
DESIGNED:	–
DRAWN:	–
CHECKED:	–
APPROVED:	–
DATE:	–

Duval Bulkhead Repair
CITY OF KEY WEST
KEY WEST, FLORIDA

MIAMI REGULATORY OFFICE
COE #: 2013-01387
PROJECT MANAGER: EWF

DUVALL STREET BULKHEAD EXISTING CONDITION

CH2MHILL
4350 W Cypress
Suite # 600
Tampa, Florida
33607

JOB No. 439197.B1.01
CAD FILE CAD FILE
SHEET NUMBER P2
SHEET OF

PERMIT DRAWINGS
NOT FOR CONSTRUCTION

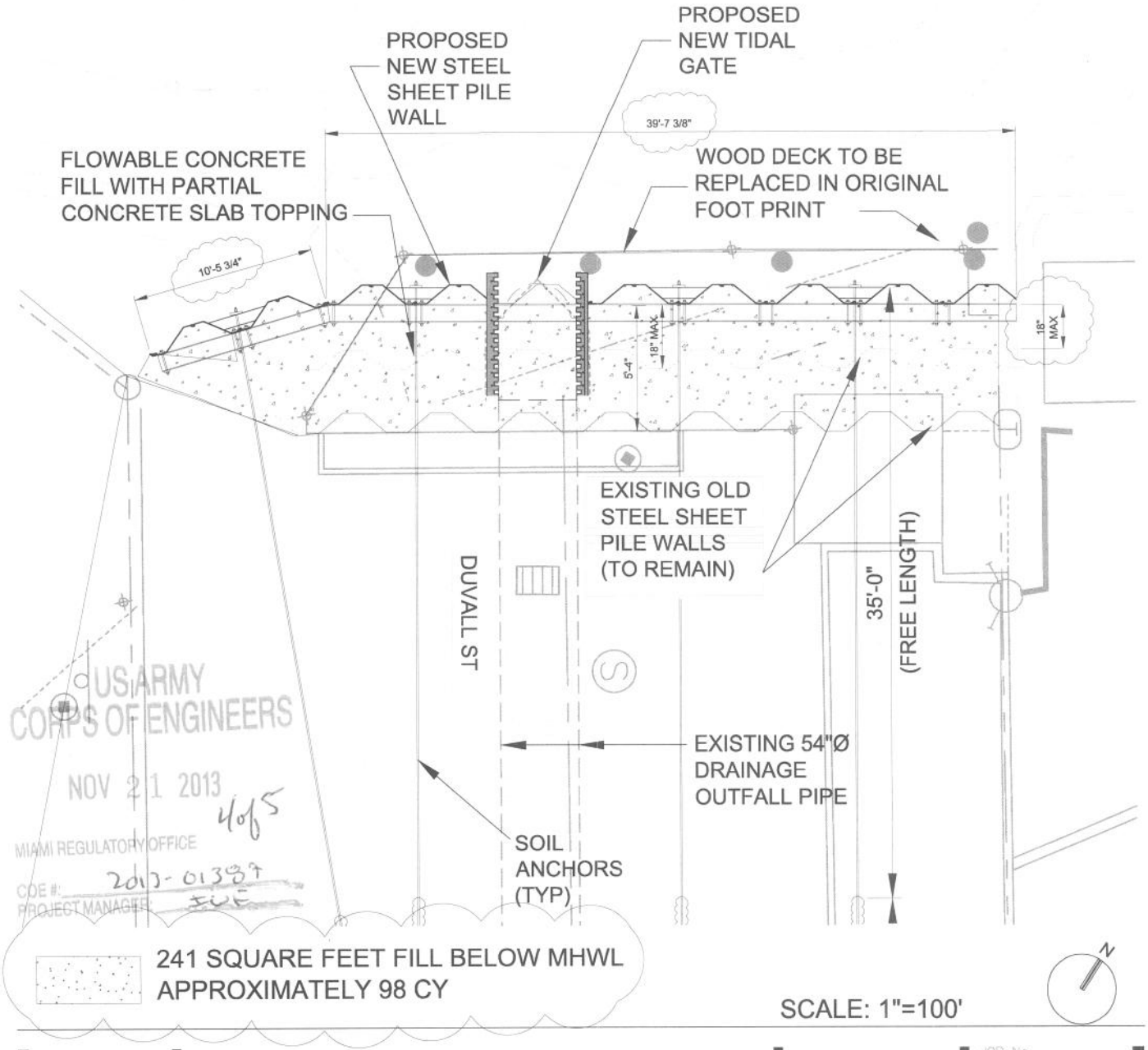

US ARMY
CORPS OF ENGINEERS
NOV 21 2013
4 of 5
MIAMI REGULATORY OFFICE
CODE #: 2013-01387
PROJECT MANAGER: EVE

SCALE: 1"=100'

PLOTTED:	–
TIME:	–
PLOT SCALE:	–
DESIGNED:	–
DRAWN:	–
CHECKED:	–
APPROVED:	–
DATE:	–

Duval Bulkhead Repair
CITY OF KEY WEST
KEY WEST, FLORIDA

DUVALL STREET BULKHEAD PLAN VIEW

CH2MHILL
4350 W Cypress
Suite # 600
Tampa, Florida
33607

JOB No. 439197.B1.01
CAD FILE CAD FILE
SHEET NUMBER P3
SHEET OF

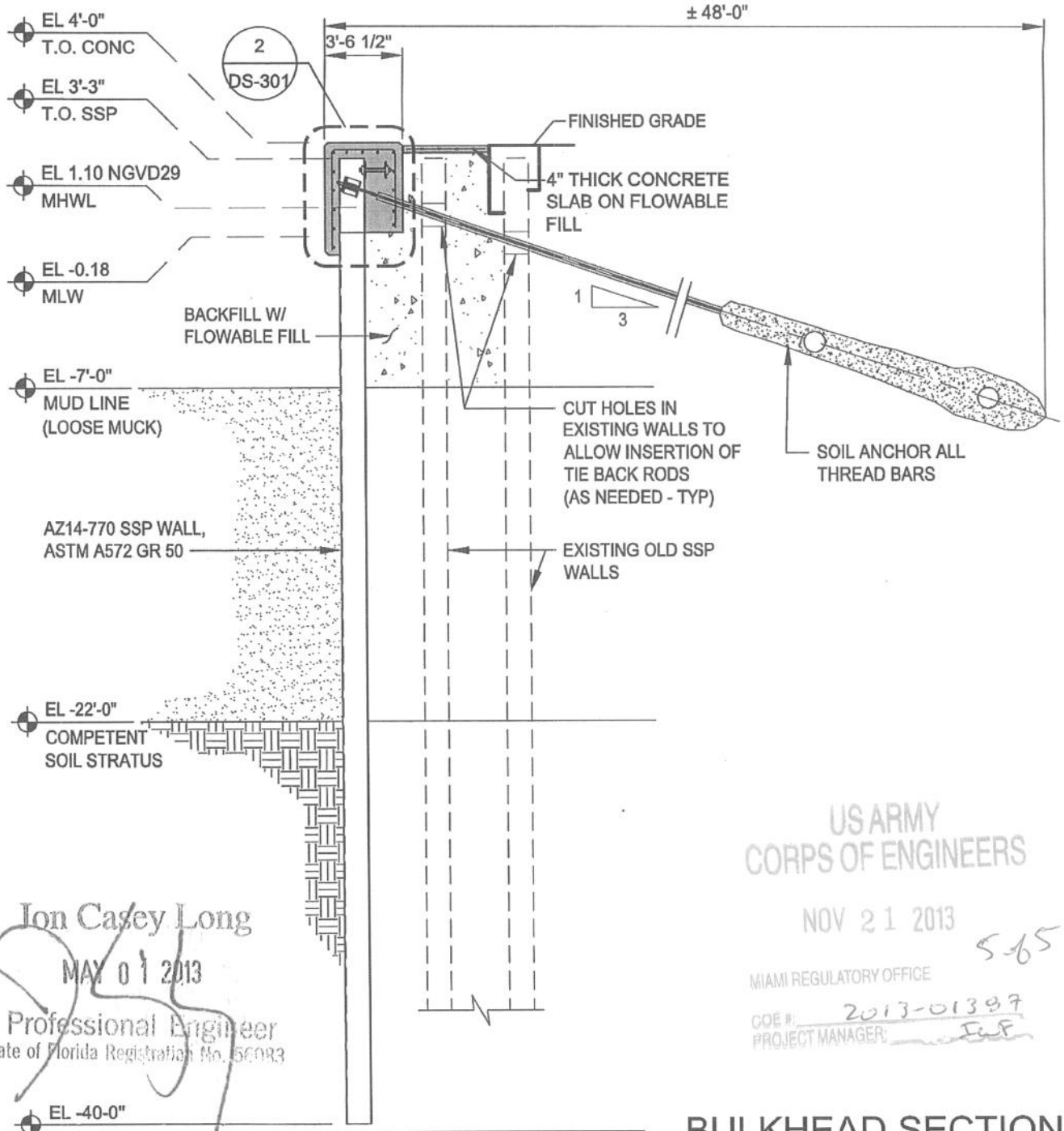

Jon Casey Long
MAY 01 2013
Professional Engineer
State of Florida Registration No. 56093

US ARMY
CORPS OF ENGINEERS
NOV 21 2013
MIAMI REGULATORY OFFICE
COE #: 2013-01397
PROJECT MANAGER: EWF

PERMIT DRAWINGS
NOT FOR CONSTRUCTION

BULKHEAD SECTION

3/16" = 1'-0"

PLOTTED:	–
TIME:	–
PLOT SCALE:	–
DESIGNED:	–
DRAWN:	–
CHECKED:	–
APPROVED:	–
DATE:	–

Duval Bulkhead Repair
CITY OF KEY WEST
KEY WEST, FLORIDA

DUVALL STREET BULKHEAD SECTION

CH2MHILL
4350 W Cypress
Suite # 600
Tampa, Florida
33607

JOB No. 439197.B1.01
CAD FILE CAD FILE
SHEET NUMBER P4
SHEET OF

DEPARTMENT OF THE ARMY PERMIT TRANSFER REQUEST

PERMIT NUMBER: SAJ-2013-01387 (NW-IF)

When the structures or work authorized by this permit are still in existence at the time the property is transferred, the terms and conditions of this permit will continue to be binding on the new owner(s) of the property. Although the construction period for works authorized by Department of the Army permits is finite, the permit itself, with its limitations, does not expire.

To validate the transfer of this permit and the associated responsibilities associated with compliance with its terms and conditions, have the transferee sign and date below and mail to the U.S. Army Corps of Engineers, Enforcement Section, Post Office Box 4970, Jacksonville, FL 32232-0019.

_____
(TRANSFEREE-SIGNATURE)

_____
(DATE)

_____
(NAME-PRINTED)

_____

_____
(MAILING ADDRESS)

_____
(CITY, STATE, ZIP CODE)

_____
(SUBDIVISION)

_____ _____
(LOT) **(BLOCK)**

_____
(STREET ADDRESS)

BID DOCUMENTS

FOR THE CONSTRUCTION OF THE

REPAIRS AND IMPROVEMENTS AT ZERO DUVAL AND MALLORY SQUARE

PREPARED FOR

CITY OF KEY WEST

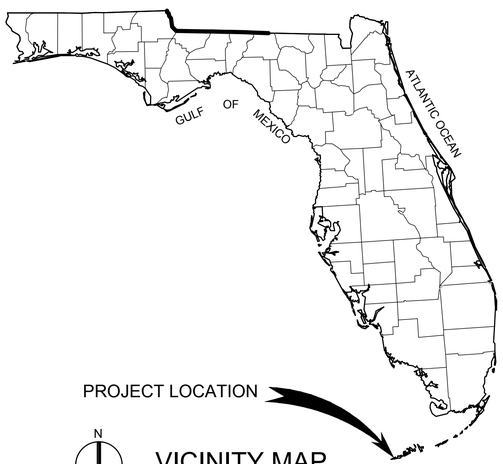

PROJECT LOCATION

N

VICINITY MAP

INDEX TO DRAWINGS

GENERAL

G-001	COVER SHEET
G-002	OVERALL SITE PLAN
G-003	HYDROGRAPHIC AND TOPOGRAPHIC SURVEY - ZERO DUVAL
G-004	HYDROGRAPHIC AND TOPOGRAPHIC SURVEY - MALLORY SQUARE

SITE / STRUCTURAL

S-001	GENERAL NOTES
DS-002	ZERO DUVAL - EXISTING SITE PHOTOS
DS-100	ZERO DUVAL - SITE DEMOLITION PLAN
DS-101	ZERO DUVAL - BULKHEAD LAYOUT PLAN
DS-301	ZERO DUVAL - BULKHEAD WALL SECTION
DS-501	ZERO DUVAL - BULKHEAD WALL DETAILS
DS-502	ZERO DUVAL - BULKHEAD WALL DETAILS
DS-503	ZERO DUVAL - OUTFLOW PIPE DETAILS
MS-101	MALLORY SQUARE - T-PIER DEMOLITION PLAN
MS-501	MALLORY SQUARE - T-PIER DOLPHIN DETAILS (1 OF 2)
MS-502	MALLORY SQUARE - T-PIER DOLPHIN DETAILS (2 OF 2)

Volume 2 of 2

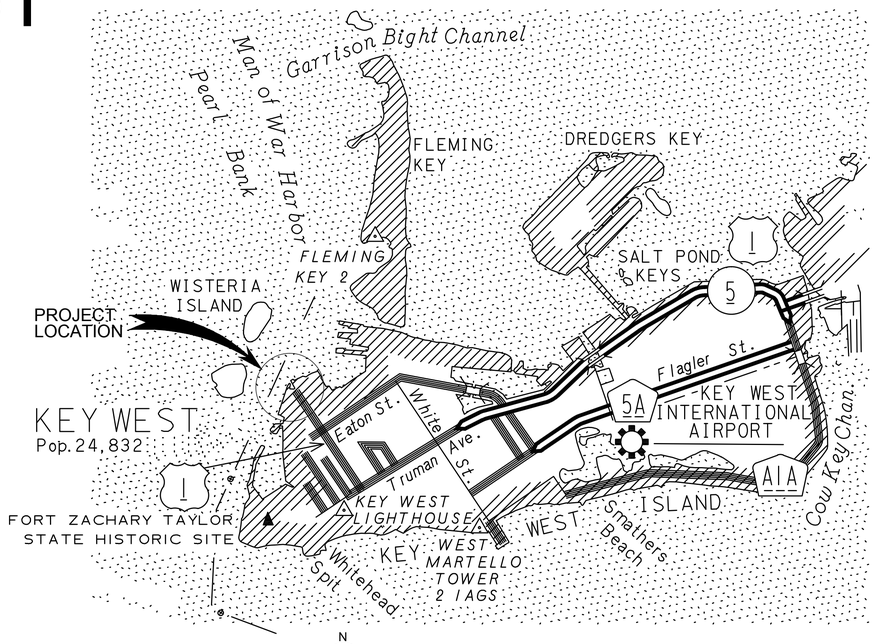

N

LOCATION MAP

Copyright for this map is registered by the State of Florida, Department of Transportation

For information regarding this project, contact:

SEAN MCCOY
6410 5th Street, Suite 2-A
Key West, FL 33040
305-294-1645

CH2MHILL

CH2M Hill Project No. 439197
Key West Project No. EN-1002
ITB No. 16-002

BID DOCUMENTS - ISSUED FOR BID
JANUARY 2016

OVERALL PROJECT SITE PLAN

1" = 40'-0"

0 40' 80' 120'
0 1" 2" 3"
1" = 40'-0"

BID SET

NO.	DATE	REVISION	BY	APVD
-	-	-	-	-

DSGN J.C. LONG | DR A. VANHOOSER | CHK J.C. LONG | APVD J.C. LONG

3001 PGA BLVD. SUITE 300
PALM BEACH GARDENS, FL 33410
EB0000072 · AAC001992

REPAIRS AND IMPROVEMENTS AT
ZERO DUVAL AND MALLORY SQUARE
FOR
CITY OF KEY WEST, FLORIDA

CH2MHILL.

GENERAL

OVERALL PROJECT SITE PLAN

VERIFY SCALE
BAR IS ONE INCH ON ORIGINAL DRAWING.
0 1"

DATE	JANUARY 2016
PROJ	439197
DWG	G-002

REUSE OF DOCUMENTS: THIS DOCUMENT, AND THE IDEAS AND DESIGNS INCORPORATED HEREIN, AS AN INSTRUMENT OF PROFESSIONAL SERVICE, IS THE PROPERTY OF CH2M HILL AND IS NOT TO BE USED, IN WHOLE OR IN PART, FOR ANY OTHER PROJECT WITHOUT THE WRITTEN AUTHORIZATION OF CH2MHILL.

©CH2M HILL 2012. ALL RIGHTS RESERVED.

BID SET - JANUARY 2016

FILENAME: D00□G-002□439197.DWG PLOT DATE: 01/04/2016 PLOT TIME: 4:02 PM

HYDROGRAPHIC & TOPOGRAPHIC SURVEY OF:

0 Duval Street, Key West

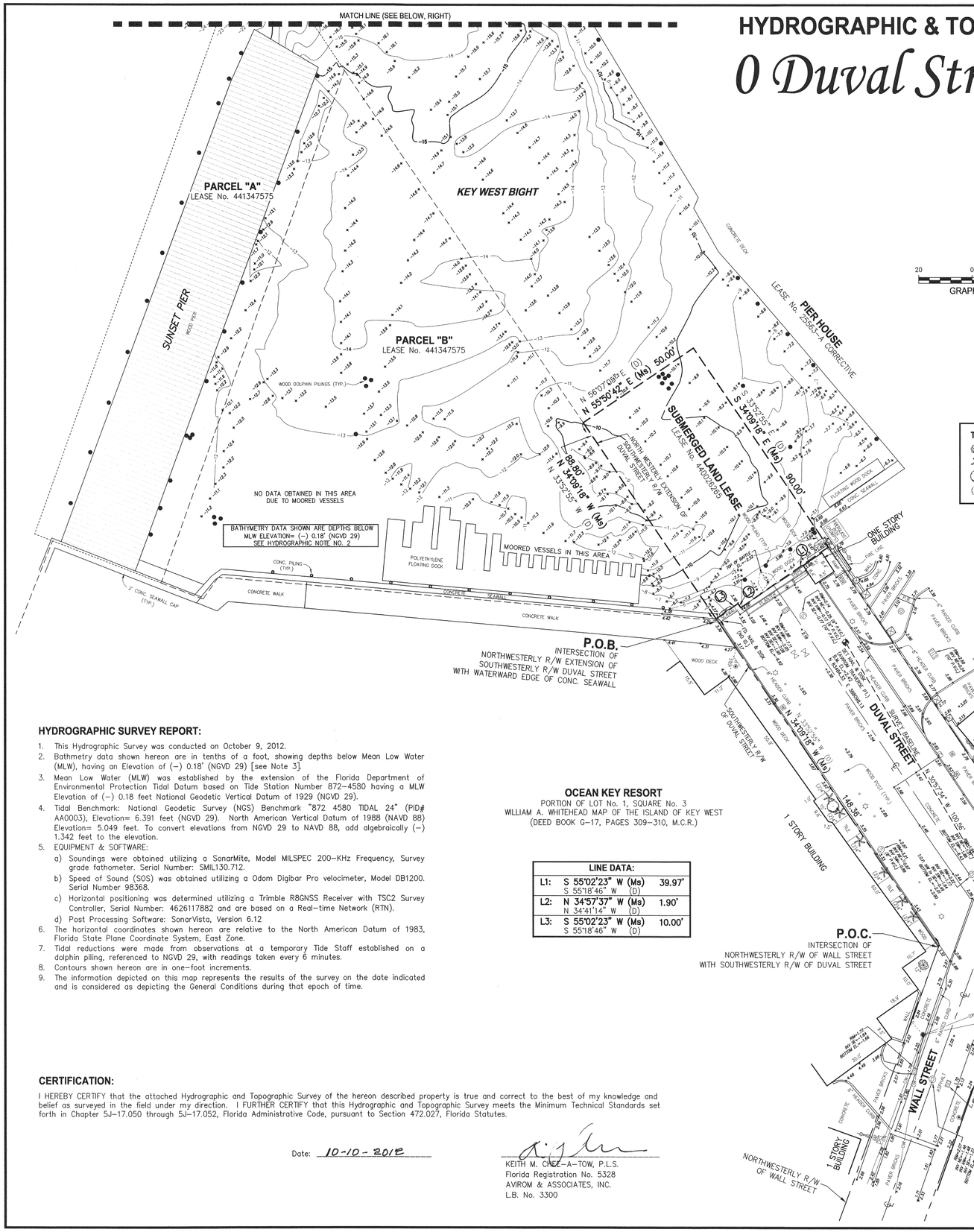

GRAPHIC SCALE IN FEET
1" = 20'

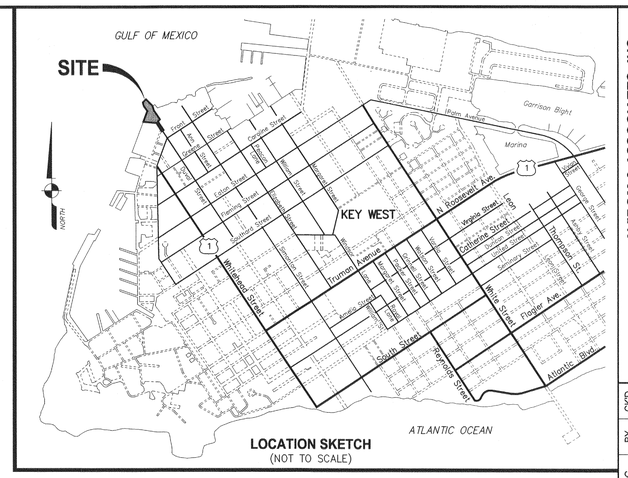

LOCATION SKETCH
(NOT TO SCALE)

TREE LEGEND:

- GUMBO LIMBO
- PALM SPECIES
- SEAGRAPE
- UNKNOWN SPECIES

SYMBOL LEGEND:

- BACKFLOW PREVENTOR
- BENCHMARK
- CATCH BASIN
- DOUBLE DETECTOR VALVE
- DRAINAGE MANHOLE
- ELECTRIC SERVICE BOX
- EXISTING ELEVATION
- GUY ANCHOR
- LAMP POST
- OVERHEAD WIRES
- SANITARY CLEANOUT
- SANITARY MANHOLE
- SIAMESE FIRE CONNECTION
- SIGN
- TELEPHONE SERVICE BOX
- VALVE
- WATER METER
- WOOD UTILITY POLE

TOPOGRAPHIC SURVEY REPORT:

1. Reproductions of this Sketch are not valid without the signature and the original raised seal of a Florida licensed surveyor and mapper.
2. No Title Opinion or Abstract to the subject property has been provided. It is possible that there are Deeds, Easements, or other instruments (recorded or unrecorded) which may affect the subject property. No search of the Public Records has been made by the Surveyor.
3. No underground improvements were located.
4. Bearings and coordinates shown hereon are relative to the North American Datum of 1983, Florida State Plane Coordinate System, East Zone.
5. Bearings and coordinates were established by a Real–time Kinematic (RTK) GPS Control Survey which is certified to a 2 centimeter local accuracy, relative to the nearest control point within the National Geodetic Survey (NGS) Geodetic Control Network.
   a) Method: Wide Area Continuously Operating GPS Reference Station Network.
   b) Equipment Used: Trimble R8GNSS Receiver with TSC2 Survey Controller, Serial Number: 4626117882
   c) Processing Software: Trimble Geomatics Office, Version 1.63.
   d) Ties were made to National Geodetic Control Point "BAYOU" (P.I.D. AD0028).
6. Elevations shown hereon are in feet and based on the National Geodetic Vertical Datum of 1929 (NGVD 1929).
7. Benchmark Description: National Geodetic Survey (NGS) Benchmark "872 4580 TIDAL 24" (PID# AA0003), Elevation= 6.391 feet (NGVD 29). North American Vertical Datum of 1988 (NAVD 88) Elevation= 5.049 feet. To convert elevations from NGVD 29 to NAVD 88, add algebraically (–) 1.342 feet to the elevation.
8. Symbols shown hereon and in the legend may have been enlarged for clarity. These symbols have been plotted at the center of the field location and may not represent the actual shape or size of the feature.
9. This map is intended to be displayed at a scale of 1:240 (1"=20') or smaller.
10. Units of measurement are in U.S. Survey Feet and decimal parts thereof. Well identified features in this survey were field measured to a horizontal positional accuracy of 0.10'. The elevations on impervious surfaces were field measured to 0.03' and on ground surfaces to 0.1'.
11. Abbreviation Legend: B.M. = Benchmark; CONC. = Concrete; EL. = Elevation; F.B. = Field Book; L.B. = Licensed Business; MLW = Mean Low Water; NAD = North American Datum; NAVD = North American Vertical Datum; NGVD = National Geodetic Vertical Datum; NGS = National Geodetic Survey; PG. = Page; P.I.D. = Point Identifier; P.L.S. = Professional Land Surveyor.

HYDROGRAPHIC SURVEY REPORT:

1. This Hydrographic Survey was conducted on October 9, 2012.
2. Bathmetry data shown hereon are in tenths of a foot, showing depths below Mean Low Water (MLW), having an Elevation of (–) 0.18' (NGVD 29) [see Note 3].
3. Mean Low Water (MLW) was established by the extension of the Florida Department of Environmental Protection Tidal Datum based on Tide Station Number 872–4580 having a MLW Elevation of (–) 0.18 feet National Geodetic Vertical Datum of 1929 (NGVD 29).
4. Tidal Benchmark: National Geodetic Survey (NGS) Benchmark "872 4580 TIDAL 24" (PID# AA0003), Elevation= 6.391 feet (NGVD 29). North American Vertical Datum of 1988 (NAVD 88) Elevation= 5.049 feet. To convert elevations from NGVD 29 to NAVD 88, add algebraically (–) 1.342 feet to the elevation.
5. EQUIPMENT & SOFTWARE:
   a) Soundings were obtained utilizing a SonarMite, Model MILSPEC 200–KHz Frequency, Survey grade fathometer. Serial Number: SMIL130.712.
   b) Speed of Sound (SOS) was obtained utilizing a Odom Digibar Pro velocimeter, Model DB1200. Serial Number 98368.
   c) Horizontal positioning was determined utilizing a Trimble R8GNSS Receiver with TSC2 Survey Controller, Serial Number: 4626117882 and are based on a Real–time Network (RTN).
   d) Post Processing Software: SonarVista, Version 6.12
6. The horizontal coordinates shown hereon are relative to the North American Datum of 1983, Florida State Plane Coordinate System, East Zone.
7. Tidal reductions were made from observations at a temporary Tide Staff established on a dolphin piling, referenced to NGVD 29, with readings taken every 6 minutes.
8. Contours shown hereon are in one–foot increments.
9. The information depicted on this map represents the results of the survey on the date indicated and is considered as depicting the General Conditions during that epoch of time.

OCEAN KEY RESORT
PORTION OF LOT No. 1, SQUARE No. 3
WILLIAM A. WHITEHEAD MAP OF THE ISLAND OF KEY WEST
(DEED BOOK G–17, PAGES 309–310, M.C.R.)

LINE DATA:		
L1:	S 55°02'23" W (Ms) S 55°18'46" W (D)	39.97'
L2:	N 34°57'37" W (Ms) N 34°41'14" W (D)	1.90'
L3:	S 55°02'23" W (Ms) S 55°18'46" W (D)	10.00'

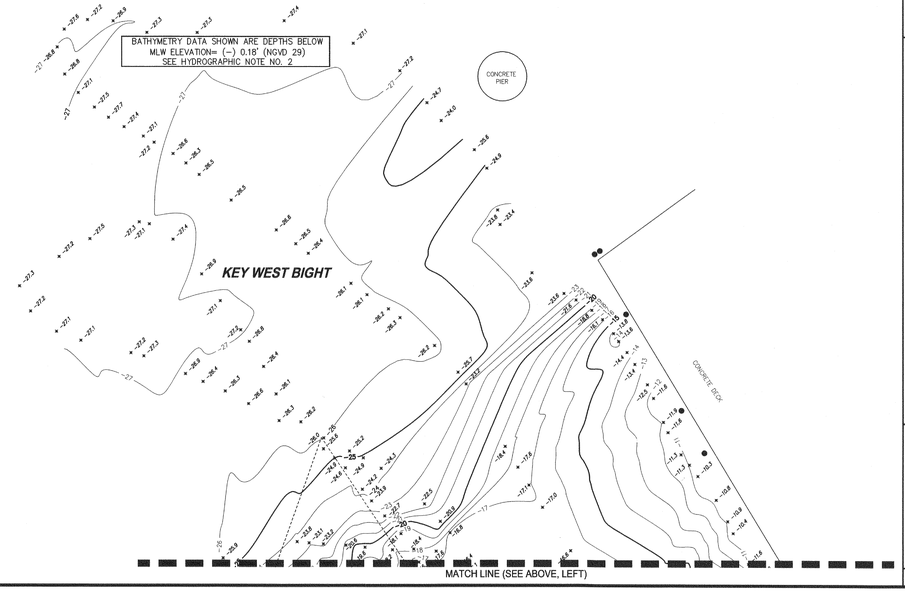

CERTIFICATION:

I HEREBY CERTIFY that the attached Hydrographic and Topographic Survey of the hereon described property is true and correct to the best of my knowledge and belief as surveyed in the field under my direction. I FURTHER CERTIFY that this Hydrographic and Topographic Survey meets the Minimum Technical Standards set forth in Chapter 5J–17.050 through 5J–17.052, Florida Administrative Code, pursuant to Section 472.027, Florida Statutes.

Date: 10-10-2012

KEITH M. CHEE–A–TOW, P.L.S.
Florida Registration No. 5328
AVIROM & ASSOCIATES, INC.
L.B. No. 3300

AVIROM & ASSOCIATES, INC.
SURVEYING & MAPPING
402 APPELROUTH LANE, SUITE 2E
KEY WEST, FLORIDA 33045
TEL. (305) 294-7770, FAX (561) 394-7125
www.AVIROM-ASSOCIATES.com

©2012 AVIROM & ASSOCIATES, INC. all rights reserved.
This sketch is the property of AVIROM & ASSOCIATES, INC. and should not be reproduced or copied without written permission.

REVISIONS	DATE	F.B. / PG.	BY	CK'D	REV/SIONS	DATE	F.B. / PG.	BY	CK'D

HYDROGRAPHIC AND TOPOGRAPHIC SURVEY
0 DUVAL STREET
AND SUBMERGED LAND LEASE No. 440026265

CITY OF KEY WEST
MONROE COUNTY, FLORIDA

SCALE:	1" = 20'
DATE:	10/10/2012
BY:	S.A.M.
CHECKED:	K.M.C.
F.B.	1613 PG. 1-9, 12-18
SHEET	1 OF 1
JOB #:	9145

DRAWING NOT TO SCALE UNLESS PRINTED ON 24" x 36" PAPER

G-003

HYDROGRAPHIC & TOPOGRAPHIC SURVEY OF:

Mallory Square, Key West

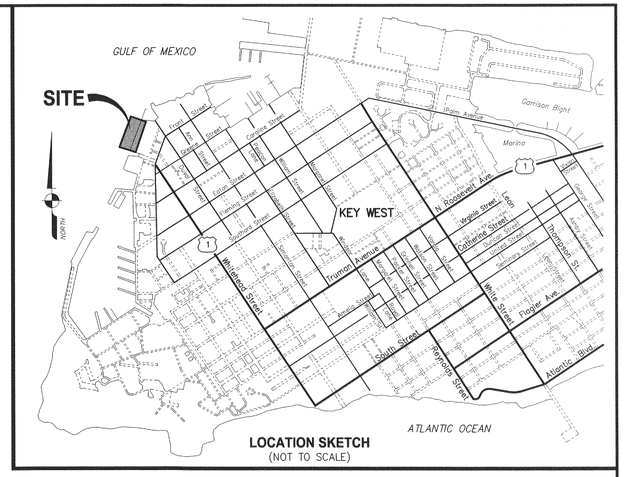

LOCATION SKETCH
(NOT TO SCALE)

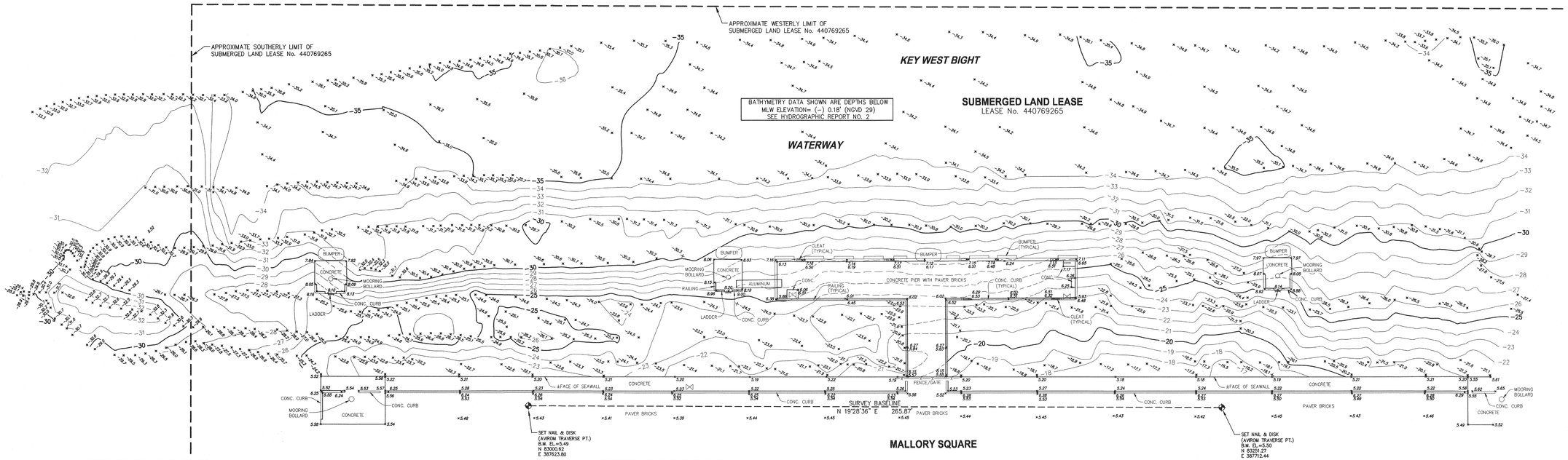

HYDROGRAPHIC SURVEY REPORT:

1. This Hydrographic Survey was conducted on October 9, 2012.
2. Bathymetry data shown hereon are in tenths of a foot, showing depths below Mean Low Water (MLW), having an Elevation of (–) 0.18' (NGVD 29) [see Note 3].
3. Mean Low Water (MLW) was established by the extension of the Florida Department of Environmental Protection Tidal Datum based on Tide Station Number 872–4580 having a MLW Elevation of (–) 0.18 feet National Geodetic Vertical Datum of 1929 (NGVD 29).
4. Tidal Benchmark: National Geodetic Survey (NGS) Benchmark "872 4580 TIDAL 24" (PID# AA0003), Elevation= 6.391 feet (NGVD 29). North American Vertical Datum of 1988 (NAVD 88) Elevation= 5.049 feet. To convert elevations from NGVD 29 to NAVD 88, add algebraically (–) 1.342 feet to the elevation.
5. EQUIPMENT & SOFTWARE:
   a) Soundings were obtained utilizing a SonarMite, Model MILSPEC 200–KHz Frequency, Survey grade fathometer. Serial Number: SMIL130.712.
   b) Speed of Sound (SOS) was obtained utilizing a Odom Digibar Pro velocimeter, Model DB1200. Serial Number 98368.
   c) Horizontal positioning was determined utilizing a Trimble R8GNSS Receiver with TSC2 Survey Controller, Serial Number: 4626117882 and are based on a Real–time Network (RTN).
   d) Post Processing Software: SonarVista, Version 6.12
6. The horizontal coordinates shown hereon are relative to the North American Datum of 1983, Florida State Plane Coordinate System, East Zone.
7. Tidal reductions were made from observations at a temporary Tide Staff established on the seawall, referenced to NGVD 29, with readings taken every 6 minutes.
8. Contours shown hereon are in one–foot increments.
9. The information depicted on this map represents the results of the survey on the date indicated and is considered as depicting the General Conditions during that epoch of time.

TOPOGRAPHIC SURVEY REPORT:

1. Reproductions of this Sketch are not valid without the signature and the original raised seal of a Florida licensed surveyor and mapper.
2. No Title Opinion or Abstract to the subject property has been provided. It is possible that there are Deeds, Easements, or other instruments (recorded or unrecorded) which may affect the subject property. No search of the Public Records has been made by the Surveyor.
3. No underground improvements were located.
4. Bearings and coordinates shown hereon are relative to the North American Datum of 1983, Florida State Plane Coordinate System, East Zone.
5. Bearings and coordinates were established by a Real–time Kinematic (RTK) GPS Control Survey which is certified to a 2 centimeter local accuracy, relative to the nearest control point within the National Geodetic Survey (NGS) Geodetic Control Network.
   a) Method: Wide Area Continuously Operating GPS Reference Station Network.
   b) Equipment Used: Trimble R8GNSS Receiver with TSC2 Survey Controller, Serial Number: 4626117882
   c) Processing Software: Trimble Geomatics Office, Version 1.63.
   d) Ties were made to National Geodetic Control Point "BAYOU" (P.I.D. AD0028).
6. Elevations shown hereon are in feet and based on the National Geodetic Vertical Datum of 1929 (NGVD 1929).
7. Benchmark Description: National Geodetic Survey (NGS) Benchmark "872 4580 TIDAL 24" (PID# AA0003), Elevation= 6.391 feet (NGVD 29). North American Vertical Datum of 1988 (NAVD 88) Elevation= 5.049 feet. To convert elevations from NGVD 29 to NAVD 88, add algebraically (–) 1.342 feet to the elevation.
8. Symbols shown hereon and in the legend may have been enlarged for clarity. These symbols have been plotted at the center of the field location and may not represent the actual shape or size of the feature.
9. This map is intended to be displayed at a scale of 1:240 (1"=20') or smaller.
10. Units of measurement are in U.S. Survey Feet and decimal parts thereof. Well identified features in this survey were field measured to a horizontal positional accuracy of 0.10'. The elevations on impervious surfaces were field measured to 0.03' and on ground surfaces to 0.1'.
11. Abbreviation Legend: B.M. = Benchmark; CONC. = Concrete; EL. = Elevation; F.B. = Field Book; L.B. = Licensed Business; MLW = Mean Low Water; NAD = North American Datum; NAVD = North American Vertical Datum; NGVD = National Geodetic Vertical Datum; NGS = National Geodetic Survey; PG. = Page; P.I.D. = Point Identifier; P.L.S. = Professional Land Surveyor.

SYMBOL LEGEND:

- BENCHMARK
- ×5.45 EXISTING ELEVATION
- SANITARY VALVE
- VALVE

CERTIFICATION:

I HEREBY CERTIFY that the attached Hydrographic and Topographic Survey of the hereon described property is true and correct to the best of my knowledge and belief as surveyed in the field under my direction. I FURTHER CERTIFY that this Hydrographic and Topographic Survey meets the Minimum Technical Standards set forth in Chapter 5J–17.050 through 5J–17.052, Florida Administrative Code, pursuant to Section 472.027, Florida Statutes.

Date: 10-09-2012

KEITH M. OLEE–A–TOW, P.L.S.
Florida Registration No. 5328
AVIROM & ASSOCIATES, INC.
L.B. No. 3300

AVIROM & ASSOCIATES, INC.
SURVEYING & MAPPING
402 APPELROUTH LANE, SUITE 2E, KEY WEST, FLORIDA 33045
TEL. (305) 294-7770, FAX (561) 394-7125
www.AVIROM-SURVEY.com

© 2012 AVIROM & ASSOCIATES, INC. all rights reserved. This sketch is the property of AVIROM & ASSOCIATES, INC. and should not be reproduced or copied without written permission.

REVISIONS	DATE	F.B. / PG.	BY	CK'D	REVISIONS	DATE	F.B. / PG.	BY	CK'D

HYDROGRAPHIC AND TOPOGRAPHIC SURVEY
MALLORY SQUARE
AND SUBMERGED LAND LEASE No. 440769265

CITY OF KEY WEST,
MONROE COUNTY, FLORIDA

JOB #:	9146
SCALE:	1" = 20'
DATE:	10/09/2012
BY:	S.A.M.
CHECKED:	K.M.C.
F.B. 1613	PG. 10 & 11
SHEET 1	OF 1

DRAWING NOT TO SCALE UNLESS PRINTED ON 24" x 36" PAPER

G-004

DESIGN SPECIFICATIONS AND REFERENCES:

1. FLORIDA BUILDING CODE, 2014 EDITION.

2. AMERICAN INSTITUTE OF STEEL CONSTRUCTION (AISC) "MANUAL OF STEEL CONSTRUCTION, ALLOWABLE STRESS DESIGN." 13th EDITION, 2005.

3. AMERICAN WELDING SOCIETY (AWS), "STRUCTURAL WELDING CODE - STEEL", ANSI/AWS D1.1/D1.1M, 2006.

4. AMERICAN CONCRETE INSTITUTE (ACI) PUBLICATION ACI 318-08 "BUILDING CODE REQUIREMENTS FOR STRUCTURAL CONCRETE" AND ACI 301- 08,"SPECIFICATIONS FOR STRUCTURAL CONCRETE".

5. FLORIDA DEPT OF TRANSPORTATION (FDOT), "STANDARD SPECIFICATIONS FOR ROAD AND BRIDGE CONSTRUCTION", 2010.

6. AMERICAN ASSOCIATION OF STATE HIGHWAY TRANSPORTATION OFFICIALS (AASHTO) "STANDARD SPECIFICATIONS FOR HIGHWAY BRIDGES." 17th EDITION, 2002.

7. UNIFIED FACILITIES CRITERIA (UFC):
   A. "DESIGN OF PIERS AND WHARVES" : UFC-4-152-01, 2005
   B. "MOORING DESIGN" UFC-4-159-3, 2005
   C. "GENERAL CRITERIA FOR WATERFRONT CONSTRUCTION"; UFC-4-151-10, 2001.

8. WIND LOADS ARE BASED ON THE AMERICAN NATIONAL STANDARDS INSTITUTE (ANSI) /AMERICAN SOCIETY OF CIVIL ENGINEERS (ASCE) PUBLICATION 7-2010 "MINIMUM DESIGN LOADS FOR BUILDING AND OTHER STRUCTURES" AND THE "FLORIDA BUILDING CODE".

PERMITS:

1. COMPLY WITH ALL REQUIREMENTS AND CONDITIONS OF THE OWNER OBTAINED ENVIRONMENTAL PERMITS, AND PERMIT MODIFICATIONS FAILURE TO DO SO MAY RESULT IN AGENCY ENFORCEMENT ACTION AGAINST THE CONTRACTOR.

2. CONTRACTOR SHALL SCHEDULE A PRE-CONSTRUCTION MEETINGS, WHERE ALL SUBCONTRACTORS SHALL PARTICIPATE ALONG WITH THE PERMITTING AGENCIES INVOLVED. ALL SHALL BE NOTIFIED IN ADVANCE OF THE MEETING AND GIVEN THE OPPORTUNITY TO ATTEND.

3. CONTRACTOR IS RESPONSIBLE FOR OBTAINING (AT A MINIMUM) CITY OF KEY WEST BUILDING PERMIT, SFWMD DEWATERING AND WATER USE PERMIT, AND STORM WATER POLLUTION PREVENTION PERMIT.

PROJECT INFORMATION:

1. THE FOLLOWING REPORTS WERE UTILIZED IN PREPARING THE DESIGN FOR THE BULKHEAD. COPIES OF THESE REPORTS ARE AVAILABLE FROM THE CITY OF KEY WEST.

   A. REPORT OF GEOTECHNICAL EXPLORATION - NUTTING ENGINEERS, MIAMI, FL, DATED FEBRUARY 2012, REPORT NO. 126-21.2.
   B. HYDROGRAPHIC AND TOPOGRAPHIC SURVEY - BY KEITH M. CHEE-A-TOW, P.L.S. FROM AVIROM & ASSOCIATES, INC OF KEY WEST, FL, DATED 10/10/2012.
   C. DUVAL STREET SEAWALL INSPECTION REPORT BY G.M. SELBY, WC OF MIAMI, FL, DATED OCTOBER 2008.

2. VERTICAL AND HORIZONTAL PROJECT CONTROLS:

   A. HORIZONTAL CONTROL BASED ON THE FLORIDA STATE PLAN COORDINATE SYSTEM (NAD83/FL EAST).
   B. BATHYMETRIC DATA IS REFERENCED TO MEAN LOW WATER (MLW) HAVING AN ELEVATION OF (-)0.18 FEET NGVD29.
   C. UPLAND ELEVATIONS ARE REFERENCED TO NGVD29 AND REFERENCED TO BENCHMARK "872 4580 TIDAL 24" (PID #AA0003) WITH ELEVATION 6.391 FEET NGVD29 AND 5.049 FEET NAVD88.
   D. REFERENCE SURVEY LISTED UNDER SECTION 1B ABOVE FOR ALL TOPOGRAPHIC INFORMATION NEEDED.

MATERIALS:

1. ALL CONCRETE (EXCEPT DRILLED SHAFT) SHALL CONTAIN:
   A. PORTLAND CEMENT -ASTM C150- TYPE II.
   B. ASTM C 989 - GROUND GRANULATED BLAST FURNACE SLAG, GRADE 120.
   C. HIGH RANGE WATER REDUCING ADMIXTURE (SUPERPLASTICIZER) AND WATER REDUCING ADMIXTURE.
   D. LOW WATER-TO-CEMENTITIOUS-MATERIALS RATIO - W/CM < 0.40.
   E. LIMIT ON SIZE OF LARGE AGGREGATE - 3/4 INCH MAXIMUM.
   F. ALL CONCRETE SHALL COMPLY WITH ACI 318 - EXPOSURE CLASS C2, FOR SEVERE CORROSION PROTECTION OF REINFORCEMENT.
   G. CALCIUM NITRITE TO BE USED FOR CORROSION INHIBITOR.

2. CAST IN PLACE CONCRETE - 28 DAY STRENGTHS
   A. DOLPHIN CAP - 5,000 psi.
   B. SSP BULKHEAD CAP - 5,000 psi.
   C. CONCRETE PAVEMENT - 3,000 psi.

MATERIALS (CONT.):

3. REINFORCEMENT:
   A. NEW BILLET REINFORCING STEEL SHALL CONFORM TO ASTM A615, GRADE 60.
   B. STEEL FOR TIGHT RADIUS BENDS AND WELDABILITY SHALL CONFORM TO ASTM A706, GRADE 60.
   C. PRESTRESSING STRANDS SHALL BE ASTM A416, 270 KSI LOW RELAXATION TYPE. ½" SPECIAL.

4. STRUCTURAL STEEL SHAPES AND PLATES SHALL CONFORM TO ASTM A992 OR ASTM A572, WITH A MINIMUM YIELD STRENGTH OF 50 KSI.

5. STEEL SHEET PILES SHALL CONFORM TO ASTM A572, GRADE 50. COAT FRONT AND BACK FACES THROUGHOUT OF BULKHEAD SHEETS, WITH MINIMUM 20 MILS DFT (TWO COATS MINIMUM) OF COAL TAR EPOXY-POLYAMIDE COATING SYSTEM (SSPC PS 11.01 AND PAINT 16) DOWN TO EL -27.0 FT.

6. FENDER MOUNTING HARDWARE, (INCLUDING NUTS, BOLTS, WASHERS, BENT PLATES, ETC.), AND ADHESIVE ANCHOR THREADED RODS EXPOSED TO SALTWATER ENVIRONMENT SHALL BE AISI TYPE 316L STAINLESS STEEL, AS APPLICABLE.

7. FLOWABLE FILL PER CONCRETE SPECIFICATIONS IN PROJECT MANUAL.

CONCRETE REQUIREMENTS:

1. PROVIDE 4 INCHES OF CONCRETE COVER OVER ALL REINFORCING STEEL.

2. CHAMFER EXPOSED CONCRETE EDGES 1 INCH BY 1 INCH.

3. FOLLOW ACI 301, ACI 305 AND ACI 306 FOR HOT AND COLD WEATHER CONCRETE WORK.

4. EMBEDDED ITEMS SHALL BE SECURELY MAINTAINED IN POSITION DURING CONCRETE PLACEMENT.

5. NOT MORE THAN ONE- HALF OF THE REINFORCING BARS SHALL BE SPLICED AT ANY ONE LOCATION, WITH ADJACENT SPLICES STAGGERED NOT LESS THAN TWO CLASS "B" LAP SPLICE LENGTHS BETWEEN SPLICES.

6. HOOKS AT THE ENDS OF REINFORCING BARS SHALL BE STANDARD ACI 90, 135 AND 180 DEGREE HOOKS CONFORMING TO ACI 318-08.

7. DO NOT CUT, BEND OR OTHERWISE MODIFY REINFORCING STEEL IN THE FIELD. REINFORCING BARS SHALL NOT BE DISPLACED TO ACCOMMODATE ANCHORS, EMBEDS, OR OTHER ITEMS.

8. ALL REINFORCEMENT SHALL BE 60 KSI CONFORMING TO ASTM A615 OR ASTM A706.

9. SPLICE REINFORCING BARS AS INDICATED. SPLICES NOT SPECIFICALLY DIMENSIONED SHALL BE IN ACCORDANCE WITH ACI 318, SECTION 12.15, CLASS "B", CASE "1" TENSION LAP SPLICES, AS TABULATED BELOW. TOP BARS ARE HORIZONTAL BARS WITH 12 INCHES OR MORE OF FRESH CONCRETE CAST BELOW THE BARS. LAP SPLICE LENGTHS ARE TABULATED FOR UNCOATED REINFORCING BARS. INCREASE TABULATED UNCOATED BAR LAP SPLICE LENGTHS BY 20-PERCENT FOR EPOXY COATED BARS.

CLASS "B" TENSION LAP SPLICES FOR UNCOATED BARS						
BAR SIZE	TOP BARS 4,000 PSI	OTHER BARS 4,000 PSI	TOP BARS 5,000 PSI	OTHER BARS 5,000 PSI	TOP BARS 6,000 PSI	OTHER BARS 6,000 PSI
#3	25"	19"	23"	17"	21"	16"
#4	33"	25"	30"	23"	28"	21"
#5	41"	31"	37"	28"	34"	26"
#6	49"	37"	45"	34"	41"	32"
#7	71"	54"	64"	49"	59"	45"
#8	81"	62"	73"	56"	67"	51"
#9	91"	70"	82"	63"	75"	57"
#10	103"	79"	93"	71"	84"	64"
#11	114"	87"	102"	78"	93"	72"

10. INTENTIONALLY ROUGHEN ALL EXISTING AND HARDENED CONCRETE SURFACES TO RECEIVE FRESH CONCRETE PLACEMENT TO AT LEAST A ¼ INCH AMPLITUDE, AND APPLY AN APPROVED EPOXY BONDING COMPOUND.

11. ALL TIES SHALL BE "CLOSED TIES", FABRICATED WITH 135-DEGREE HOOKS OR TWO PIECE HAIRPIN CLOSED TIES WITH SUFFICIENT TENSION LAP SPLICE LENGTH TO FULLY DEVELOP TO TIE BAR REINFORCEMENT.

WELDING REQUIREMENTS:

1. WELDING SHALL CONFORM TO (AWS) "STRUCTURAL WELDING CODE- STEEL", D1.1 -06.

2. SHOP AND FIELD WELDING SHALL BE PERFORMED BY CERTIFIED AND APPROVED WELDERS, WITH VALID AWS CERTIFICATES OBTAINED WITHIN 12 MONTHS OF REQUIRED WELDING WORK.

3. WELDED CONNECTIONS SHALL BE PRE-QUALIFIED IN ACCORDANCE WITH AWS D1.1.

4. WELDED STEEL CONNECTIONS SHALL BE MADE USING SHIELDED METAL ARC PROCESS, OR APPROVED EQUAL, WITH ELECTRODES CONFORMING TO E70XX.

5. WELDS (SHOP AND FIELD) SHALL BE VISUALLY INSPECTED BY AWS CERTIFIED WELDING INSPECTORS (CWI), AND TESTED AS SPECIFIED IN THE SECTION "WELDING".

STEEL SHEET PILE REQUIREMENTS:

1. DRIVING TEMPLATE SHALL BE USED TO LOCATE AND GUIDE THE INSTALLATION OF AZ-SHEET PILES.

2. DRIVE AZ-SHEET PILES TO THE TOE ELEVATIONS SHOWN. JETTING IS NOT ALLOWED.

3. BE PREPARED TO PREDRILL OR PREPUNCH BULKHEAD ALIGNMENT TO FACILITATE INSTALLATION OF SHEET PILES TO MINIMUM REQUIRED PENETRATION DEPTH (IF NEEDED).

4. EXTRACT AND RE-DRIVE PILES IF REQUIRED, TO OBTAIN THE PROPER ALIGNMENT, PLUMBNESS, AND PENETRATION.

5. TAKE CARE TO PREVENT SAG IN TIE RODS. SUPPORT TIE RODS PRIOR TO BACKFILLING, TO MINIMIZE SAG.

6. PRETENSION TIE RODS TO MAINTAIN BULKHEAD PLUMB AND WITHIN 1-1/2-INCHES, PLUS-OR-MINUS, OF THAT SHOWN.

7. FLOWABLE FILL MUST BE INSTALLED AND ALLOWED TO HARDEN PRIOR TO STRESSING THE TIE BACK RODS.

8. CONTRACTOR'S OPTION TO USE HELICAL PILES OF EQUAL OR GREATER CAPACITY THAN THE SPECIFIED LOADS OF THE SOIL ANCHORS SHOWN. CONTRACTOR TO SUBMIT PROPOSED DESIGN FOR REVIEW AND APPROVAL.

BID SET

NO.	DATE	REVISION	BY	APVD
-	-	-	-	-

DSGN M. MOZO / A. ARTHAY | DR A. VANHOOSER | CHK J.C. LONG | APVD J.C. LONG

©CH2M HILL 2012. ALL RIGHTS RESERVED.

REUSE OF DOCUMENTS: THIS DOCUMENT, AND THE IDEAS AND DESIGNS INCORPORATED HEREIN, AS AN INSTRUMENT OF PROFESSIONAL SERVICE, IS THE PROPERTY OF CH2M HILL AND IS NOT TO BE USED, IN WHOLE OR IN PART, FOR ANY OTHER PROJECT WITHOUT THE WRITTEN AUTHORIZATION OF CH2MHILL.

3001 PGA BLVD. SUITE 300
PALM BEACH GARDENS, FL 33410
EB0000072 · AAC001992

REPAIRS AND IMPROVEMENTS AT
ZERO DUVAL AND MALLORY SQUARE
FOR
CITY OF KEY WEST, FLORIDA

CH2MHILL®

SITE
ZERO DUVAL AND MALLORY SQUARE
GENERAL NOTES

VERIFY SCALE
BAR IS ONE INCH ON ORIGINAL DRAWING.
0 1"

DATE	JANUARY 2016
PROJ	439197
DWG	S-001

BID SET - JANUARY 2016

1 PHOTO
NTS

2 PHOTO
NTS

3 PHOTO
NTS

4 PHOTO
NTS

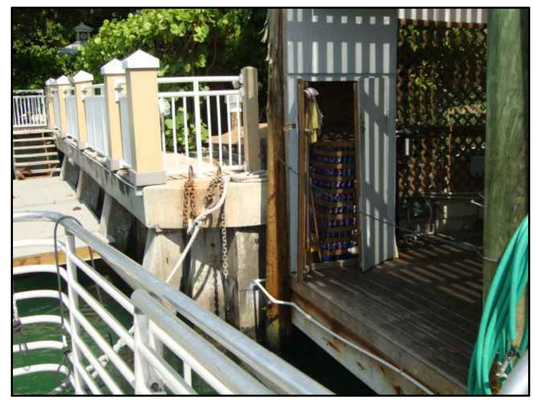

5 PHOTO
NTS

6 PHOTO
NTS

7 PHOTO
NTS

8 PHOTO
NTS

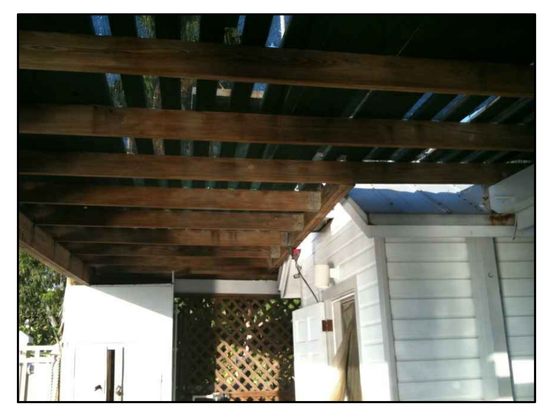

9 PHOTO
NTS

BID SET

NO.	DATE	REVISION	BY	APVD
-	-	-	-	-

DSGN A. ARTHAY | DR A. VANHOOSER | CHK J.C. LONG | APVD J.C. LONG

CH2MHILL.
3001 PGA BLVD. SUITE 300
PALM BEACH GARDENS, FL 33410
EB0000072 · AAC001992

REPAIRS AND IMPROVEMENTS AT
ZERO DUVAL AND MALLORY SQUARE
FOR
CITY OF KEY WEST, FLORIDA

SITE
ZERO DUVAL
EXISTING SITE PHOTOS

VERIFY SCALE
BAR IS ONE INCH ON ORIGINAL DRAWING.
0 1"

DATE JANUARY 2016
PROJ 439197
DWG DS-001

BID SET - JANUARY 2016

REUSE OF DOCUMENTS: THIS DOCUMENT, AND THE IDEAS AND DESIGNS INCORPORATED HEREIN, AS AN INSTRUMENT OF PROFESSIONAL SERVICE, IS THE PROPERTY OF CH2M HILL AND IS NOT TO BE USED, IN WHOLE OR IN PART, FOR ANY OTHER PROJECT WITHOUT THE WRITTEN AUTHORIZATION OF CH2MHILL.
©CH2M HILL 2012. ALL RIGHTS RESERVED.

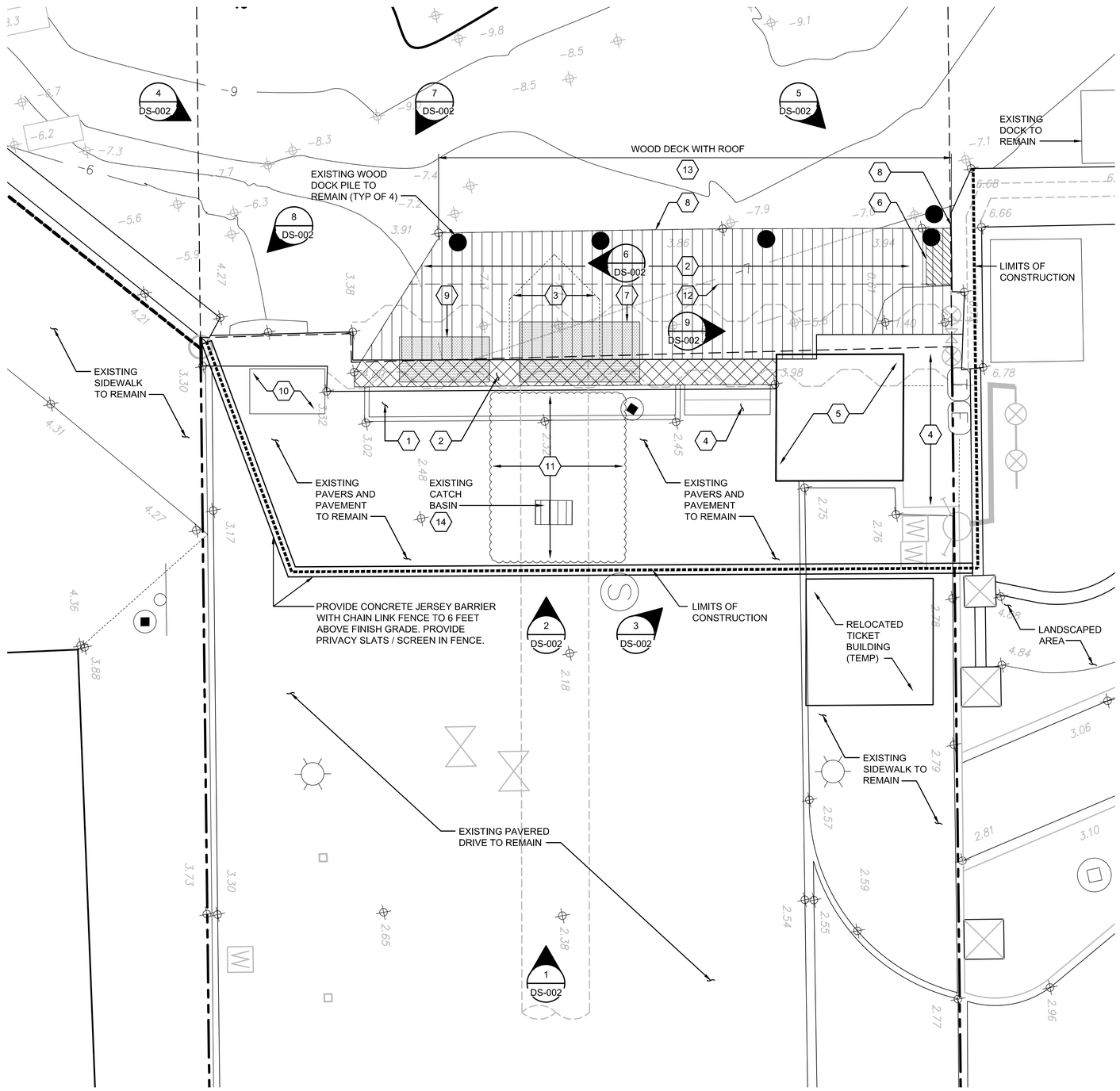

SITE DEMOLITION PLAN

1/4" = 1'-0"

GENERAL NOTES:

1. EXISTING SITE SHALL BE BARRICADED AS INDICATED WITH A CONCRETE PRECAST BARRIER WALL SYSTEM WITH CHAIN LINK FENCE AND PRIVACY SLATS SCREEN. BARRIER WALL SYSTEM SHALL BE COORDINATED WITH THE OWNER FOR THE NECESSARY LOCATION DURING CONSTRUCTION. ALL ITEMS IDENTIFIED TO BE ADDRESSED IN THE KEY NOTES BELOW SHALL BE ADDRESSED. ALL ELEMENTS WITHIN LIMITS OF CONSTRUCTION, NOT IDENTIFIED TO BE REPAIRED, DEMOLISHED OR ADDRESSED BY THE CONTRACTOR SHALL REMAIN UNTOUCHED BUT WILL BE REPAIRED IF DAMAGED DURING CONSTRUCTION. EXISTING PAVERS, CONCRETE CURBS AND OTHER AESTHETIC FEATURES SHALL BE RESTORED TO THEIR ORIGINAL CONDITION UPON COMPLETION OF CONSTRUCTION, IF DAMAGED DURING THE CONSTRUCTION PROCESS.

2. UPON RECONSTRUCTION OF THE EXISTING WOOD DOCK, THE CONTRACTOR SHALL RETURN ALL FURNITURE, FURNISHINGS, EQUIPMENT, OTHER ELEMENTS, TO THEIR ORIGINAL LOCATIONS AND CONDITION, INCLUDING ALL UTILITIES AND OTHER CONNECTIONS REMOVED AS A RESULT OF CONSTRUCTION. CONTRACTOR SHALL THOROUGHLY PHOTOGRAPH THE SITE AND AS-BUILT THE AREA PRIOR TO DISMANTLING AND DEMOLITION TO PROVIDE A RECORD OF ELEMENTS TO BE REINSTALLED.

KEYED NOTES: ⟨-⟩

1. MAINTAIN EXISTING PLANTER IN CURRENT LOCATION DURING CONSTRUCTION UNLESS REQUIRED TO BE RELOCATED FOR THE PURPOSES OF CONSTRUCTION. IF PLANTER IS RELOCATED, IT SHALL BE MOVED BY CONTRACTOR TO A SECURE LOCATION OFF-SITE AND RETURNED AND RESTORED TO ITS ORIGINAL CONDITION BY CONTRACTOR PRIOR TO COMPLETION OF PROJECT.

2. MAINTAIN EXISTING OVERHEAD SIGN FOR THE PROJECT IN ITS CURRENT LOCATION DURING CONSTRUCTION UNLESS REQUIRED BY CONTRACTOR TO BE REMOVED TO IMPLEMENT CONSTRUCTION PROJECT. SHOULD REMOVAL OF SIGN BE REQUIRED, CONTRACTOR SHALL DISASSEMBLE THE SIGN IN ITS ENTIRETY AND STORE IT OFF-SITE. CONTRACTOR SHALL REASSEMBLE SIGN TO ITS ORIGINAL CONDITION UPON COMPLETION OF CONSTRUCTION. CONTRACTOR SHALL RETAIN THE SERVICES OF A LICENSED ENGINEER IN THE STATE OF FLORIDA FOR REVISED ENGINEERING ON SIGN TO MEET CURRENT CODES AND BUILDING DEPARTMENT APPROVAL.

3. REMOVE IN ITS ENTIRETY AND LEGALLY DISPOSE OF OFF-SITE THE EXISTING 5'-8" x 5'-8" SQUARE STEEL PLATE W/ 36" LONG COLLAR AND UNDERWATER RUBBER BAFFLE AT OUTFALL TO STORM WATER SYSTEM. MAINTAIN OUTFALL DURING CONSTRUCTION. DO NOT PLUG.

4. MAINTAIN EXISTING CONCRETE STEPS AND RAMP IN THEIR ENTIRETY DURING CONSTRUCTION. PATCH AND REPAIR STEPS UPON COMPLETION OF CONSTRUCTION. CONTRACTOR SHALL WIDEN STEPS AND RAMP TO COMPLY WITH ADA INCLUDING RAILINGS.

5. REMOVE EXISTING TICKET BUILDING AND RELOCATE TO A LOCATION AS INDICATED ON DRAWING. EXISTING BOOTH SHALL BE MAINTAINED IN FULL OPERATION AT TEMPORARY LOCATION INCLUDING WATER AND POWER DURING THE CONSTRUCTION OF BULKHEAD. CONTRACTOR SHALL COORDINATE TEMPORARY WATER AND POWER CONNECTIONS FOR BUILDING AS WELL AS PROVIDE HURRICANE TIE-DOWNS AND FOUNDATION SUPPORTS FOR BUILDING DURING BULKHEAD CONSTRUCTION. UPON COMPLETION OF CONSTRUCTION, BUILDING SHALL BE RETURNED TO ITS ORIGINAL LOCATION AND TIED DOWN TO GROUND AS REQUIRED UNDER CURRENT BUILDING CODE. ALL FOUNDATIONS, ELECTRICAL AND WATER SHALL BE RESTORED TO ITS ORIGINAL CONDITION. CONTRACTOR SHALL RETAIN THE SERVICES OF A LICENSED ENGINEER IN THE STATE OF FLORIDA FOR REVISED ENGINEERING ON BUILDING AND FOUNDATION TO MEET CURRENT CODES AND BUILDING DEPARTMENT APPROVAL.

6. CONTRACTOR SHALL REMOVE EXISTING WOOD STORAGE BOX FROM TOP OF WOOD DECK, INCLUDING ALL ITEMS STORED WITHIN. BOX SHALL BE TRANSPORTED AND STORED OFF-SITE BY CONTRACTOR FOR REINSTALLATION UPON COMPLETION OF CONSTRUCTION. COORDINATE WITH TENANT AND OWNER WITH RESPECT TO THE CONTENTS OF BOX AND THE FINAL LOCATION UPON COMPLETION OF WOOD DECK CONSTRUCTION. BOX SHALL BE FASTENED TO FINISHED WOOD DECK.

7. CONTRACTOR SHALL COORDINATE WITH TENANT FOR REMOVAL OF EXISTING WOOD STORAGE LOCKER FROM TOP OF WOOD DECK, INCLUDING ALL ITEMS STORED WITHIN. BOX SHALL BE TRANSPORTED AND STORED OFF-SITE BY CONTRACTOR FOR REINSTALLATION UPON COMPLETION OF CONSTRUCTION. COORDINATE WITH TENANT AND OWNER WITH RESPECT TO THE CONTENTS AND THE FINAL LOCATION UPON COMPLETION OF WOOD DECK CONSTRUCTION. BOX SHALL BE FASTENED TO FINISHED WOOD DECK.

8. CONTRACTOR SHALL REMOVE EXISTING WATER MAIN, CAP AND PLUG AT POINT OF CONNECTION, AND PROVIDE A NEW VALVE AT REMOVAL POINT. UPON COMPLETION OF CONSTRUCTION, CONTRACTOR SHALL RE-INSTALL WATER LINE FROM VALVE TO ORIGINAL ALIGNMENT AND TERMINATION POINT. WATER SHALL BE RESTORED TO ORIGINAL / NORMAL OPERATION.

9. CONTRACTOR SHALL COORDINATE WITH TENANT FOR REMOVAL OF EXISTING REFRIGERATOR FROM TOP OF WOOD DECK, INCLUDING ALL ITEMS STORED WITHIN. REFRIGERATOR SHALL BE TRANSPORTED AND STORED OFF-SITE BY CONTRACTOR FOR REINSTALLATION UPON COMPLETION OF CONSTRUCTION. COORDINATE WITH TENANT AND OWNER WITH RESPECT TO THE CONTENTS AND THE FINAL LOCATION UPON COMPLETION. RE-INSTALL ALL ELECTRICAL POWER SOURCE FOR REFRIGERATOR UPON COMPLETION OF CONSTRUCTION OF WOOD DECK AND RETURN REFRIGERATOR TO FULL OPERATION. REFRIGERATOR SHALL BE FASTENED TO FINISHED WOOD DECK.

10. CONTRACTOR SHALL REMOVE EXISTING STORAGE BOX / LOCKER FROM TOP OF EXISTING PAVEMENT, INCLUDING ALL ITEMS STORED WITH. BOX / LOCKER SHALL BE TRANSPORTED AND STORED OFF-SITE BY CONTRACTOR FOR REINSTALLATION UPON COMPLETION OF CONSTRUCTION OF PROJECT. COORDINATE WITH TENANT AND OWNER WITH RESPECT TO THE CONTENTS AND THE FINAL LOCATION UPON COMPLETION. BOX SHALL BE FASTENED TO FINISHED PAVEMENT.

11. CONTRACTOR SHALL REMOVE EXISTING PAVERS IN THEIR ENTIRETY WITHIN THE AREA SHOWN AND EXPOSE OUTFALL PIPE TO BOTTOM OF PIPE. EXAMINE CONDITION OF PIPE WITH OWNER AND ENGINEER AND REPAIR OPEN JOINT WITH FILTER CLOTH WRAP AND A CONCRETE COLLAR (6" x 12" x CONTINUOUS) AND CRACKS IN PIPE WITH GROUT AND EPOXY INJECTION, BACKFILL AND COMPACT SITE TO A MAXIMUM OF 2% SLOPE, BACKFILL HOLE WITH FLOWABLEFILL. BACKFILL AND COMPACT OTHER AREAS WITH NEW SUBGRADE MATERIAL (98% MODIFIED PROCTOR) AS REQUIRED TO REMOVE POTHOLES AND BUMPS. RE-INSTALL EXISTING PAVERS AS NECESSARY TO PROVIDE A COMPLETE SLOPED GRADE TO DRAIN. PROVIDE A MINIMUM OF 12" OF FLOWABLE FILL BELOW ALL REINSTALLED PAVERS.

12. CONTRACTOR SHALL CUT AND TRIM EXISTING EXPOSED AND UNDERWATER STEEL SHEET PILE BULKHEAD (AS REQUIRED) TO CONSTRUCT NEW STEEL PILE BULKHEAD AND OUTFALL STRUCTURES. ITEMS SHALL BE LEGALLY DISPOSED OF OFF-SITE.

13. CONTRACTOR SHALL REMOVE EXISTING WOOD DECKING STRUCTURE BOTH FLOOR AND ROOF IN ITS ENTIRETY AND SALVAGE FOR RE-INSTALLATION MEETING CURRENT DESIGN CODES UPON COMPLETION OF CONSTRUCTION OF NEW BULKHEAD. EXISTING WOOD PILING SHALL REMAIN IN PLACE. EXISTING WOOD PLANKING, JOISTS, PURLINS, GIRTS, AND ROOF FRAMING SHALL BE MAINTAINED AS PART OF THE DEMOLITION PROJECT. DAMAGED ELEMENTS SHALL BE REPLACED BY CONTRACTOR AS PART OF THE BASE BID. CONTRACTOR SHALL RETAIN THE SERVICES OF A LICENSED ENGINEER IN THE STATE OF FLORIDA FOR REVISED ENGINEERING ON SIGN TO MEET CURRENT CODES AND BUILDING DEPARTMENT APPROVAL.

14. PROVIDE FILTER CLOTH AND HAY BALES ON EXISTING CATCH BASIN DURING CONSTRUCTION.

LEGEND:

1 / DS-001 — REFERENCE PHOTO INDICATOR. ARROW INDICATES DIRECTION OF PHOTO. SEE DRAWING DS-001.

0 4' 8' 12'
0 1" 2" 3"
1/4" = 1'-0"

BID SET

NO.	DATE	REVISION	BY	APVD
DSGN	A. ARTHAY	DR A. VANHOOSER / CHK J.C. LONG	APVD J.C. LONG	

CH2MHILL.
3001 PGA BLVD. SUITE 300
PALM BEACH GARDENS, FL 33410
EB0000072 · AAC001992

REPAIRS AND IMPROVEMENTS AT
ZERO DUVAL AND MALLORY SQUARE
FOR
CITY OF KEY WEST, FLORIDA

SITE
ZERO DUVAL
SITE DEMOLITION PLAN

VERIFY SCALE
BAR IS ONE INCH ON ORIGINAL DRAWING.
0 1"

DATE	JANUARY 2016
PROJ	439197
DWG	DS-100

REUSE OF DOCUMENTS: THIS DOCUMENT, AND THE IDEAS AND DESIGNS INCORPORATED HEREIN, AS AN INSTRUMENT OF PROFESSIONAL SERVICE, IS THE PROPERTY OF CH2M HILL AND IS NOT TO BE USED, IN WHOLE OR IN PART, FOR ANY OTHER PROJECT WITHOUT THE WRITTEN AUTHORIZATION OF CH2MHILL.
©CH2M HILL 2012. ALL RIGHTS RESERVED.

BID SET - JANUARY 2016

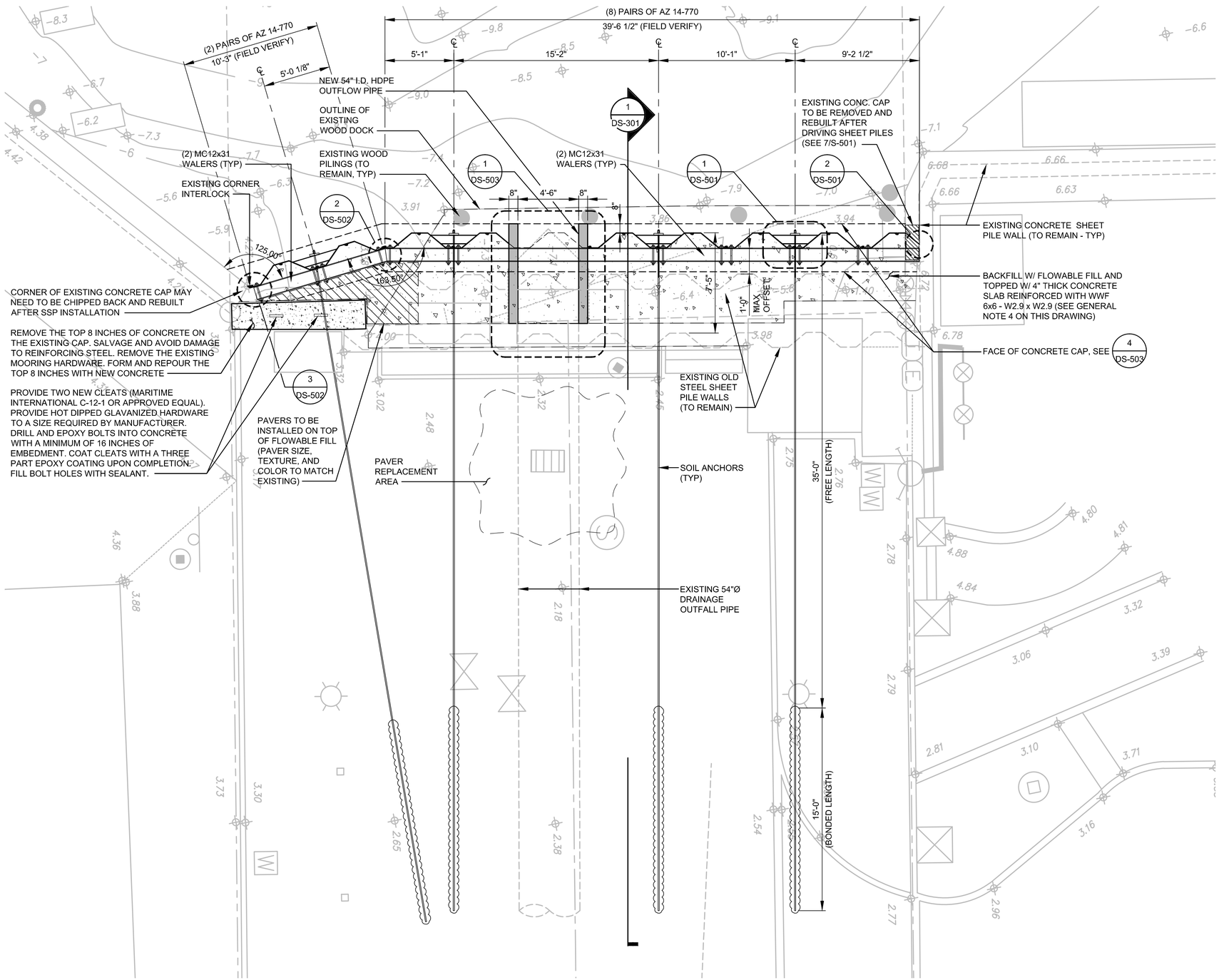

BULKHEAD PLAN

1/4" = 1'-0"

NOTE: MAINTAIN OUTFALL FLOW DURING CONSTRUCTION. DO NOT PLUG.

GENERAL NOTES:

1. BATHYMETRY DATA SHOWN REFER TO MEAN LOW WATER. MLW ELEVATION = (-) 0.18 FEET (NGVD 29).
2. TOPOGRAPHIC ELEVATIONS SHOWN IN FEET BASED ON BENCHMARK ELEVATION = 6.391 FEET (NGVD 29).
3. ANY MUCK THAT IS EXCAVATED TO ACCOMMODATE THE PIPE MUST BE DISPOSED OF AT AN APPROVED LOCATION OFFSITE.
4. FLOWABLE FILL MUST BE VIBRATED IN AND MIXED WITH EXISTING MUCK DOWN FOR 5 FEET TO ELEVATION -12.0 FEET. ALL MUCK THAT COMES TO TOP MUST BE DISPOSED OF AT AN APPROVED LOCATION OFFSITE. CONCRETE SLAB SHALL ONLY BEAR ON CLEAN FLOWABLE FILL.
5. ALL SHEET PILES AND INTERLOCKS SHALL BE EPOXY COATED AS SPECIFIED DOWN TO ELEVATION -27.0 FEET.
6. ALL SHEET PILES AND INTERLOCKS SHALL BE ASTM A572, GRADE 50 (U.N.O.).
7. ALL STRUCTURAL SHAPES, CHANNELS, PLATES, AND MISCELLANEOUS STEEL SHALL BE ASTM A572, GRADE 50 (U.N.O.).
8. ALL BOLTS AND RELATED HARDWARE SHALL BE ASTM A325.
9. CONTRACTOR SHALL VERIFY ALL DIMENSIONS AND CONDITIONS PRIOR TO ORDERING OR FABRICATING ANY MATERIALS.
10. CONTRACTOR IS RESPONSIBLE FOR LOCATION OF EXISTING UTILITIES.

LEGEND:

EXISTING CONSTRUCTION (TO REMAIN)

NEW CONSTRUCTION

0 4' 8' 12'
0 1" 2" 3"
1/4" = 1'-0"

Know what's **below.**
Call before you dig.

BID SET

NO.	DATE	REVISION	BY	APVD

DSGN A. ARTHAY | DR A. VANHOOSER | CHK J.C. LONG | APVD J.C. LONG

CH2MHILL®
3001 PGA BLVD. SUITE 300
PALM BEACH GARDENS, FL 33410
EB0000072 · AAC001992

REPAIRS AND IMPROVEMENTS AT
ZERO DUVAL AND MALLORY SQUARE
FOR
CITY OF KEY WEST, FLORIDA

SITE
ZERO DUVAL
BULKHEAD LAYOUT PLAN

VERIFY SCALE
BAR IS ONE INCH ON ORIGINAL DRAWING.
0 1"

DATE	JANUARY 2016
PROJ	439197
DWG	DS-101

REUSE OF DOCUMENTS: THIS DOCUMENT, AND THE IDEAS AND DESIGNS INCORPORATED HEREIN, AS AN INSTRUMENT OF PROFESSIONAL SERVICE, IS THE PROPERTY OF CH2M HILL AND IS NOT TO BE USED, IN WHOLE OR IN PART, FOR ANY OTHER PROJECT WITHOUT THE WRITTEN AUTHORIZATION OF CH2MHILL.
©CH2M HILL 2012. ALL RIGHTS RESERVED.

BID SET - JANUARY 2016

FILENAME: D15-DS-101_439197.DWG PLOT DATE: 01/04/2016 PLOT TIME: 4:10 PM

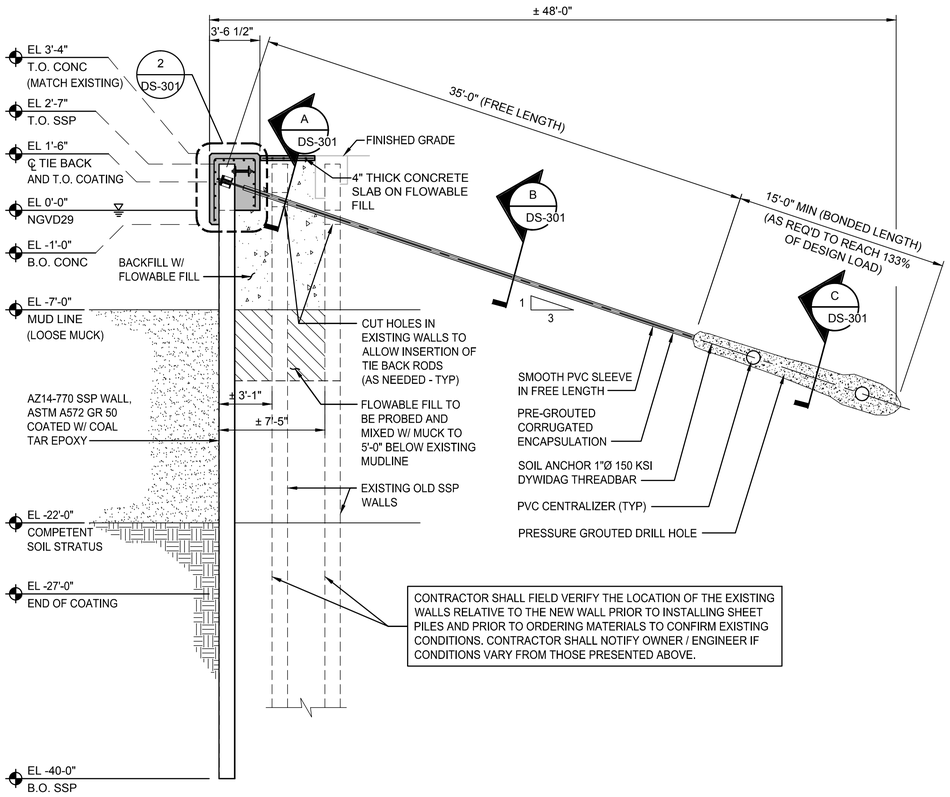

1 BULKHEAD WALL SECTION

3/16" = 1'-0"

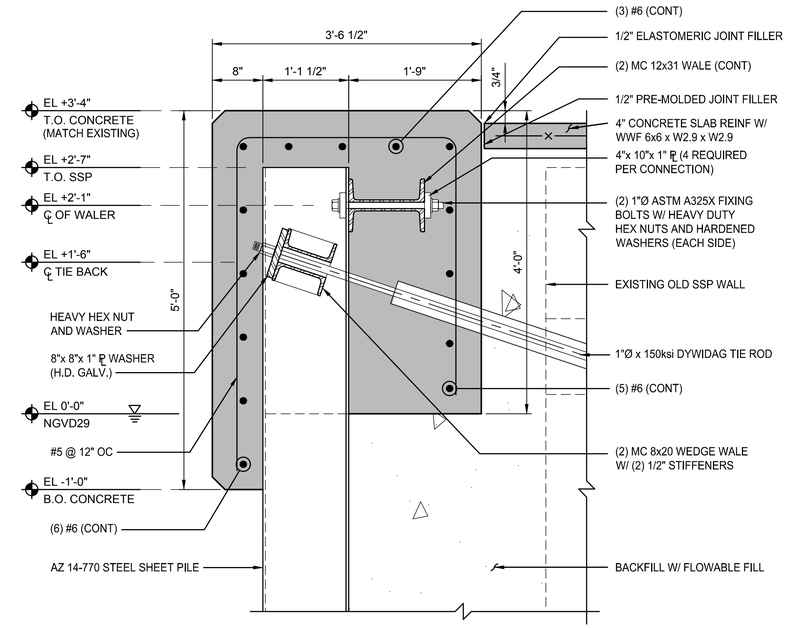

2 BULKHEAD CAP DETAIL

1" = 1'-0"

NOTE: TOP OF NEW CONCRETE CAP TO MATCH TOP OF EXISTING CONCRETE CAP TO ALLOW THE RE-USE OF EXISTING WOOD DOCK OVER BOTH OF THEM.

NOTES FOR GROUTED SOIL ANCHORS:

1. SEE SPECIFICATIONS FOR SOIL ANCHORS INSTALLATION AND TESTING.
2. CONTRACTOR SHALL BE RESPONSIBLE FOR DESIGNING AND PROVIDING GROUTED SOIL ANCHOR SYSTEM ACCORDING TO THE SPECIFICATIONS.
3. GROUTED SOIL ANCHOR SYSTEM SHALL BE CAPABLE OF PROVIDING THE FOLLOWING ALLOWABLE HORIZONTAL LOAD CAPABILITIES:
   A. SOIL ANCHOR ALLOWABLE DESIGN LOAD = 82,000 LB / ANCHOR.
   B. SOIL ANCHOR MINIMUM LOCK-OFF LOAD = 61,500 LB / ANCHOR.
   C. EACH SOIL ANCHOR SHALL BE PROOF TESTED TO 133% OF THE ALLOWABLE DESIGN CAPACITY LOAD TO 109,000 LB.
   D. SOIL ANCHOR DETAILS SHOWN ARE FOR ILLUSTRATIVE PURPOSES ONLY.
4. CONTRACTOR SHALL BE RESPONSIBLE FOR MAINTAINING WALL VERTICALLY PLUMB DURING CONSTRUCTION AND BACKFILLING, BY ADJUSTING SOIL ANCHOR NUTS AT WALE.
5. TO AVOID EXCESSIVE DEFLECTION OF THE NEW BULKHEAD WALL, PRODUCTION SOIL ANCHORS SHALL NOT BE TESTED UNTIL ADEQUATE FLOWABLE FILL HAS BEEN PLACED AND HARDENED BEHIND THE WALL.
6. AFTER GROUTING THE SOIL ANCHOR BOND LENGTH, THE ANCHOR SHALL BE ATTACHED TO THE BULKHEAD WITH ONLY A NOMINAL TENSION TO RESIST WALL DEFLECTION DURING BACKFILLING OPERATIONS.
7. CONTRACTOR SHALL TAKE PRECAUTIONS DURING CONSTRUCTION AND BACKFILLING TO MINIMIZE TRANSVERSE LOADING OF THE SOIL ANCHORS.
8. SOIL ANCHORS SHALL FOLLOW AS A MINIMUM CLASS I PROTECTION, MULTIPLE CORROSION PROTECTION III PER PTI MANUAL.
9. HELICAL PILES CAN BE USED IN LIEU OF SOIL ANCHORS AT CONTRACTOR'S CHOICE. PROVIDE DOCUMENTATION OF PROPOSED HELICAL PILE AND DETAILS OF SYSTEM WHICH SHALL PROVIDE A MINIMUM STRENGTH TO MATCH DESIGN LOADS SHOWN, AND SHALL NEED TO BE PROOF TESTED INDIVIDUALLY.

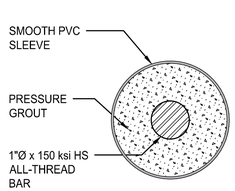

A DETAIL

6" = 1'-0"

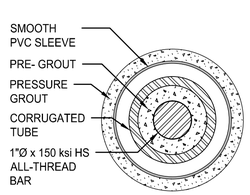

B DETAIL

6" = 1'-0"

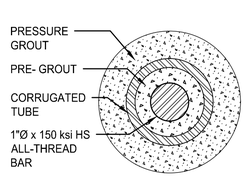

C DETAIL

6" = 1'-0"

0 4' 8' 12' 16'
0 1" 2" 3"
3/16" = 1'-0"

0 6" 12"
0 1" 2" 3"
3" = 1'-0"

0 3" 6"
0 1" 2" 3"
6" = 1'-0"

BID SET

NO.	DATE	DSGN	DR	REVISION	CHK	APVD	BY	APVD
-	-	A. ARTHAY	A. VANHOOSER	-	J.C. LONG	J.C. LONG	-	J.C. LONG

CH2MHILL.
3001 PGA BLVD. SUITE 300
PALM BEACH GARDENS, FL 33410
EB0000072 · AAC001992

REPAIRS AND IMPROVEMENTS AT
ZERO DUVAL AND MALLORY SQUARE
FOR
CITY OF KEY WEST, FLORIDA

STRUCTURAL
ZERO DUVAL
BULKHEAD WALL SECTION

VERIFY SCALE
BAR IS ONE INCH ON ORIGINAL DRAWING.
0 1"

DATE	JANUARY 2016
PROJ	439197
DWG	DS-301

REUSE OF DOCUMENTS: THIS DOCUMENT, AND THE IDEAS AND DESIGNS INCORPORATED HEREIN, AS AN INSTRUMENT OF PROFESSIONAL SERVICE, IS THE PROPERTY OF CH2M HILL AND IS NOT TO BE USED, IN WHOLE OR IN PART, FOR ANY OTHER PROJECT WITHOUT THE WRITTEN AUTHORIZATION OF CH2MHILL.
©CH2M HILL 2012. ALL RIGHTS RESERVED.

BID SET - JANUARY 2016

FILENAME: D15-DS-301_439197.DWG PLOT DATE: 01/04/2016 PLOT TIME: 4:12 PM

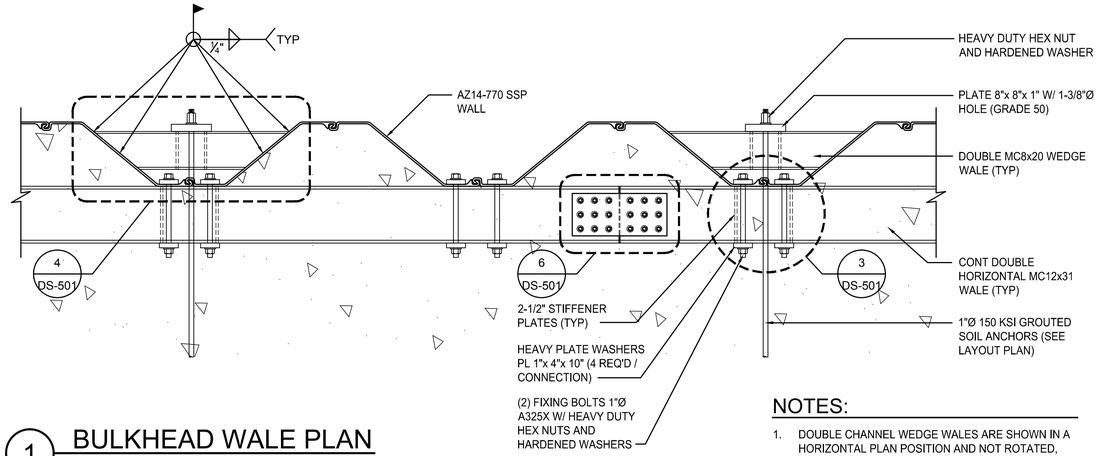

1 BULKHEAD WALE PLAN
3/4" = 1'-0"

NOTES:

1. DOUBLE CHANNEL WEDGE WALES ARE SHOWN IN A HORIZONTAL PLAN POSITION AND NOT ROTATED, REFER TO DRAWING DS-301.
2. CAP REINFORCEMENT NOT SHOWN FOR CLARITY.

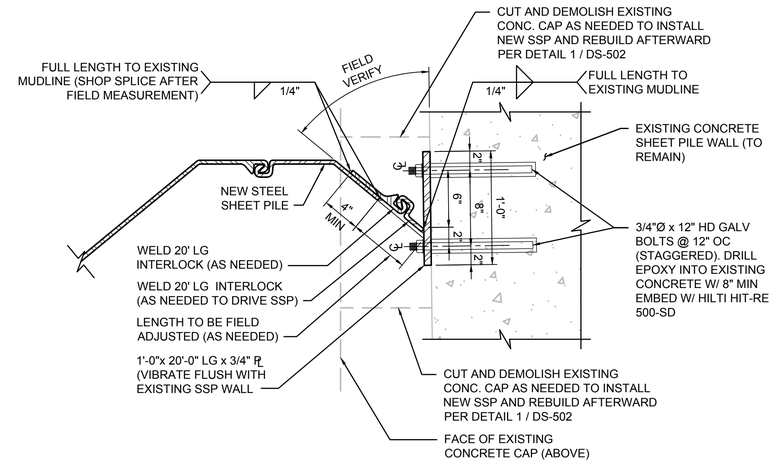

2 DETAIL
1-1/2" = 1'-0"

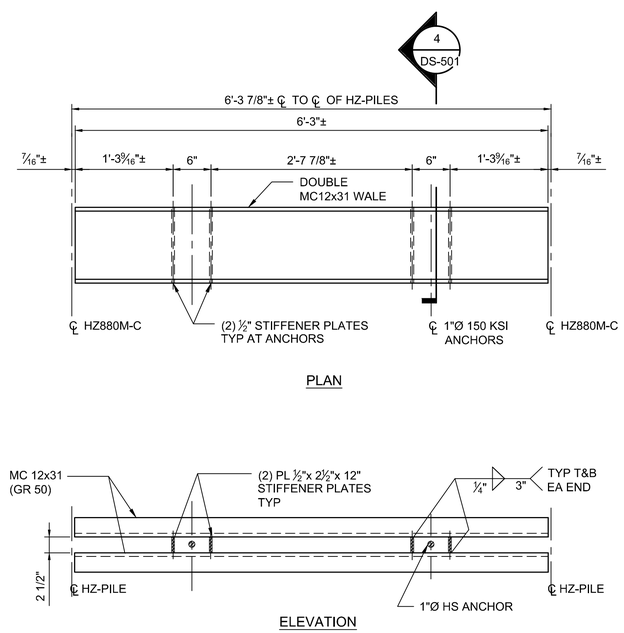

3 DETAIL
1" = 1'-0"

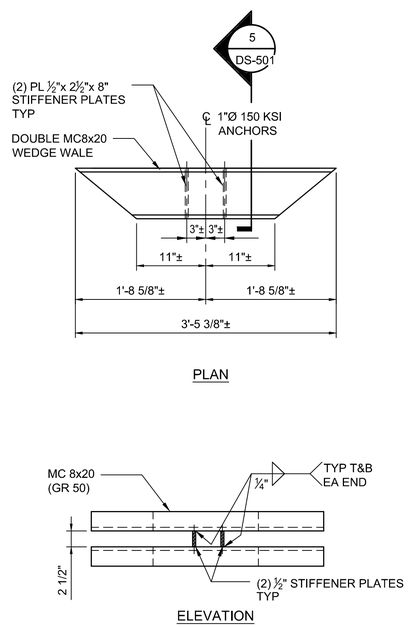

4 DETAIL
1" = 1'-0"

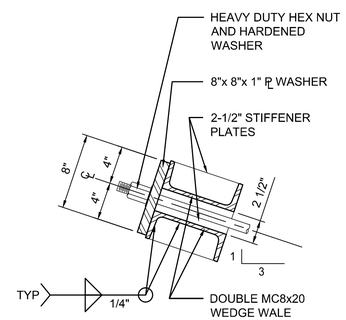

NOTE: FABRICATOR TO VERIFY DIMENSIONS OF WEDGE-WALE TO ENSURE COMPATABILITY WITH INSIDE DIMENSIONS OF AZ14-770 PAIR

5 WEDGE WALE DETAIL
1-1/2" = 1'-0"

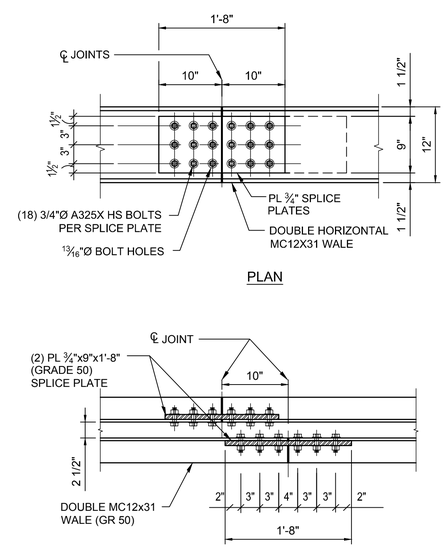

6 WALE SPLICE TYP DETAIL
1" = 1'-0"

0 1' 2' 3' 4' / 0 1" 2" 3" — 3/4" = 1'-0"

0 1' 2' 3' / 0 1" 2" 3" — 1" = 1'-0"

0 1' 2' / 0 1" 2" 3" — 1-1/2" = 1'-0"

BID SET

NO.	DATE	REVISION	BY	APVD
-	-	-	-	-

DSGN A. ARTHAY | DR A. VANHOOSER | CHK J.C. LONG | APVD J.C. LONG

3001 PGA BLVD. SUITE 300
PALM BEACH GARDENS, FL 33410
EB0000072 · AAC001992

REPAIRS AND IMPROVEMENTS AT
ZERO DUVAL AND MALLORY SQUARE
FOR
CITY OF KEY WEST, FLORIDA

CH2MHILL.

STRUCTURAL
ZERO DUVAL
BULKHEAD WALL DETAILS

VERIFY SCALE
BAR IS ONE INCH ON ORIGINAL DRAWING
0 1"

DATE JANUARY 2016
PROJ 439197
DWG DS-501

REUSE OF DOCUMENTS: THIS DOCUMENT, AND THE IDEAS AND DESIGNS INCORPORATED HEREIN, AS AN INSTRUMENT OF PROFESSIONAL SERVICE, IS THE PROPERTY OF CH2M HILL AND IS NOT TO BE USED, IN WHOLE OR IN PART, FOR ANY OTHER PROJECT WITHOUT THE WRITTEN AUTHORIZATION OF CH2MHILL.
©CH2M HILL 2012. ALL RIGHTS RESERVED.

BID SET - JANUARY 2016

FILENAME: D15-DS-501_439197.DWG PLOT DATE: 01/04/2016 PLOT TIME: 4:13 PM

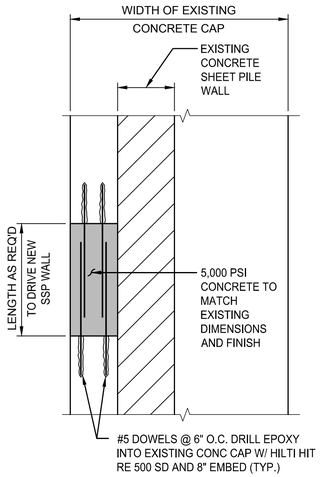

1 REPAIR DETAIL
3/4" = 1'-0"

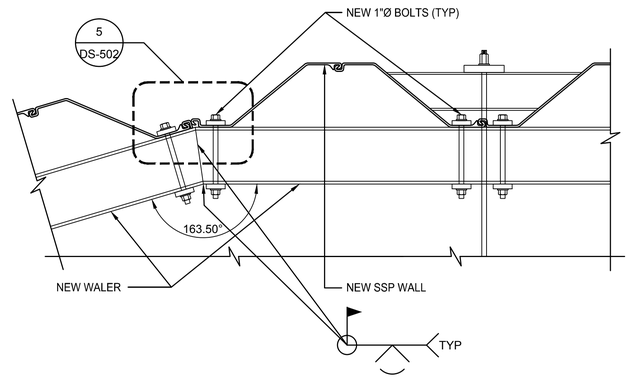

2 BULKHEAD DETAIL
3/4" = 1'-0"

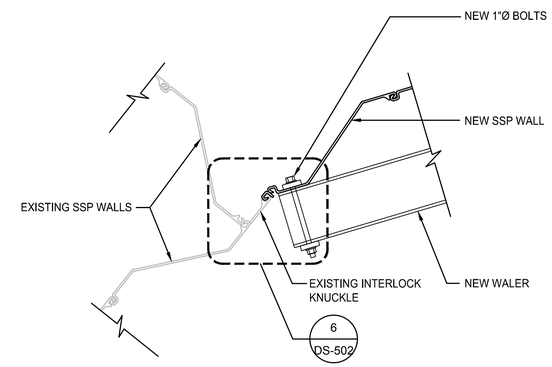

3 BULKHEAD DETAIL
3/4" = 1'-0"

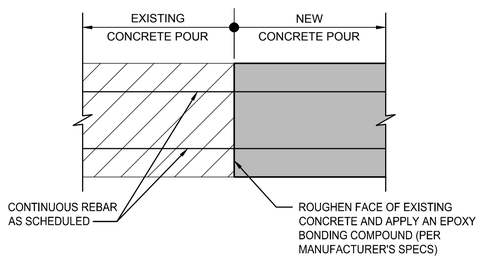

NOTE: LAP SPLICES SHALL BE 48 BAR DIAMETERS (MIN) AND STAGGERED EVERY OTHER BAR.

4 TYP CONSTRUCTION JOINT
N.T.S.

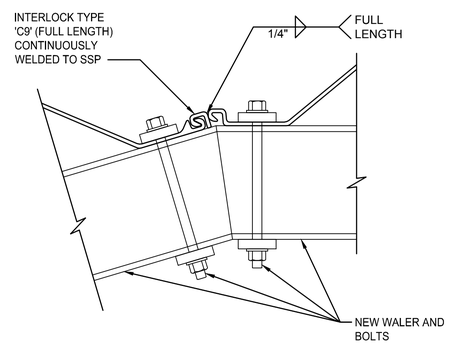

5 DETAIL
1-1/2" = 1'-0"

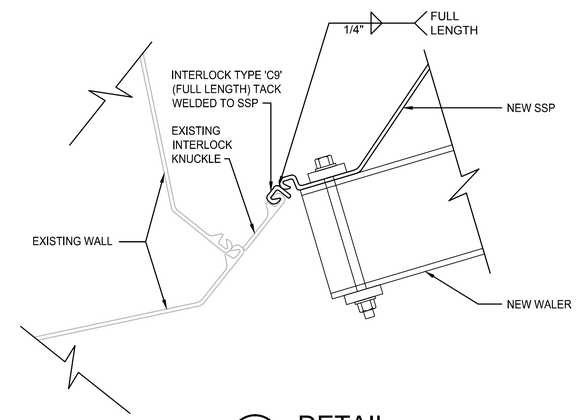

6 DETAIL
1-1/2" = 1'-0"

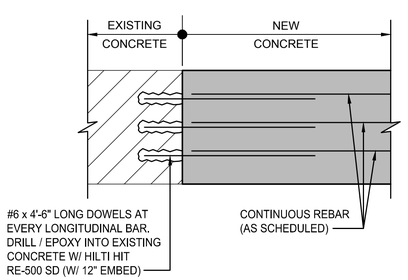

7 TYP CAP DOWELING DETAIL
N.T.S.

0 1' 2' 3' 4'
0 1" 2" 3"
3/4" = 1'-0"

0 1' 2' 3'
0 1" 2" 3"
1" = 1'-0"

0 1' 2'
0 1" 2" 3"
1-1/2" = 1'-0"

BID SET

NO.	DATE	DR	REVISION	CHK	APVD	BY	APVD
-	-	-	-	-	-	-	-
DSGN	A. ARTHAY	A. VANHOOSER		J.C. LONG	J.C. LONG		J.C. LONG

©CH2M HILL 2012. ALL RIGHTS RESERVED.

3001 PGA BLVD. SUITE 300
PALM BEACH GARDENS, FL 33410
EB0000072 · AAC001992

REPAIRS AND IMPROVEMENTS AT
ZERO DUVAL AND MALLORY SQUARE
FOR
CITY OF KEY WEST, FLORIDA

STRUCTURAL
ZERO DUVAL
BULKHEAD WALL DETAILS

REUSE OF DOCUMENTS: THIS DOCUMENT, AND THE IDEAS AND DESIGNS INCORPORATED HEREIN, AS AN INSTRUMENT OF PROFESSIONAL SERVICE, IS THE PROPERTY OF CH2M HILL AND IS NOT TO BE USED, IN WHOLE OR IN PART, FOR ANY OTHER PROJECT WITHOUT THE WRITTEN AUTHORIZATION OF CH2MHILL.

VERIFY SCALE
BAR IS ONE INCH ON ORIGINAL DRAWING.
0 1"

DATE	JANUARY 2016
PROJ	439197
DWG	DS-502

BID SET - JANUARY 2016

FILENAME: D15-DS-502_439197.DWG PLOT DATE: 01/04/2016 PLOT TIME: 4:18 PM

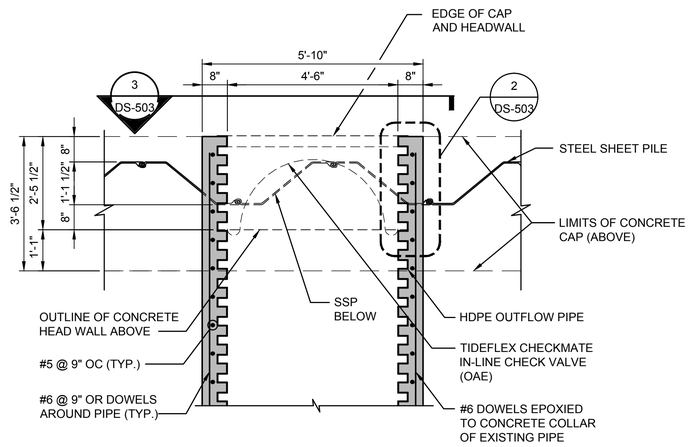

1 OUTFLOW PIPE PLAN

1/2" = 1'-0"

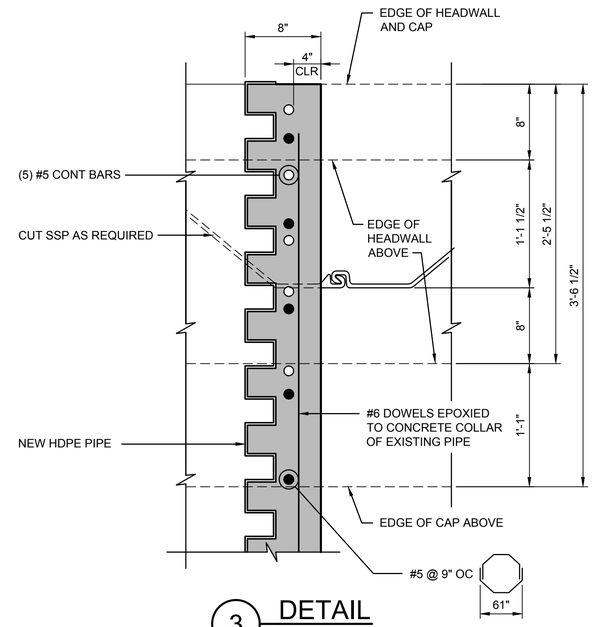

3 DETAIL

1-1/2" = 1'-0"

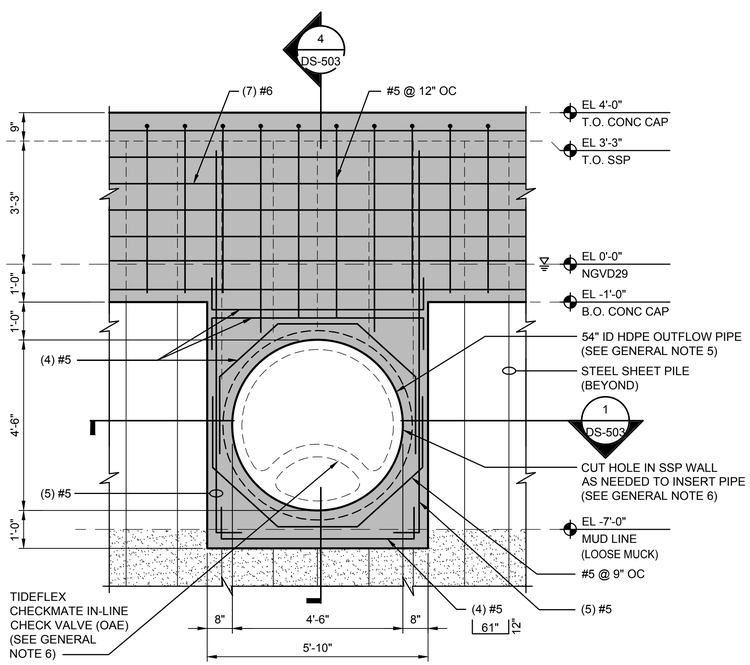

2 OUTFLOW PIPE ELEVATION

1/2" = 1'-0"

NOTES:

1. CONTRACTOR SHALL INSTALL AN ANCHORING SYSTEM TO COUNTERACT BUOYANCY IN CONCRETE PRIOR TO POURING CONCRETE ENCASEMENT AROUND NEW HDPE PIPE.
2. CONTRACTOR TO VERIFY PIPE I.D. PRIOR TO ORDERING TIDEFLEX VALVE.

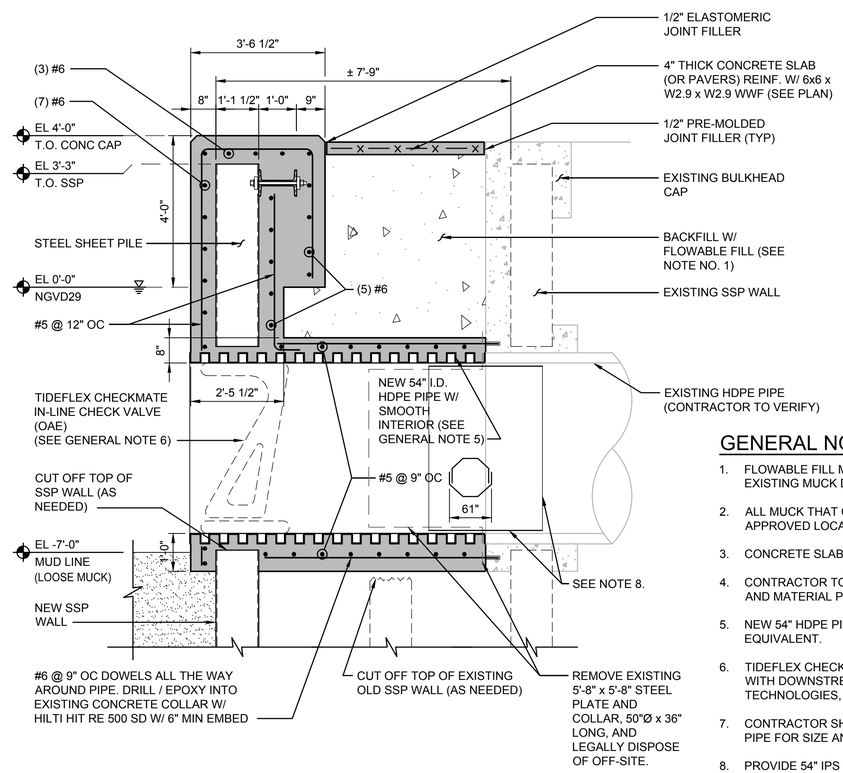

4 OUTFLOW PIPE SECITON

1/2" = 1'-0"

GENERAL NOTES:

1. FLOWABLE FILL MUST BE VIBRATED IN AND MIXED WITH EXISTING MUCK DOWN FOR 5 FEET TO ELEVATION -12.0 FEET.
2. ALL MUCK THAT COMES TO TOP MUST BE DISPOSED OF AT AN APPROVED LOCATION OFFSITE.
3. CONCRETE SLAB SHALL ONLY BEAR ON CLEAN FLOWABLE FILL.
4. CONTRACTOR TO VERIFY EXISTING 54" STORM PIPE FOR SIZE AND MATERIAL PRIOR TO ORDERING NEW PIPE.
5. NEW 54" HDPE PIPE SHALL BE EAGLE CORR PE (DUAL WALL) OR EQUIVALENT.
6. TIDEFLEX CHECKMATE IN-LINE VALVE SHALL BE 54" MOUNTED WITH DOWNSTREAM CLAMP, MANUFACTURED BY TIDEFLEX TECHNOLOGIES, CARNEGIE, PA (412-279-0044).
7. CONTRACTOR SHALL COORDINATE CHECK VALVE WITH HDPE PIPE FOR SIZE AND FIT UP.
8. PROVIDE 54" IPS HDPE 32.5DR SPLICE SLEEVE. INSERT 18" INTO EXISTING PIPE AND 18" INTO NEW TO BRIDGE CONNECTION BETWEEN EXISTING AND NEW OUTFALL PIPES.

0 2' 4' 6' — 0 1" 2" 3" — 1/2" = 1'-0"

0 1' 2' — 0 1" 2" 3" — 1-1/2" = 1'-0"

BID SET

NO.	DATE	REVISION	BY	APVD

DSGN	DR	CHK	APVD
A. ARTHAY	A. VANHOOSER	J.C. LONG	J.C. LONG

©CH2M HILL 2012. ALL RIGHTS RESERVED.

REUSE OF DOCUMENTS: THIS DOCUMENT, AND THE IDEAS AND DESIGNS INCORPORATED HEREIN, AS AN INSTRUMENT OF PROFESSIONAL SERVICE, IS THE PROPERTY OF CH2M HILL AND IS NOT TO BE USED, IN WHOLE OR IN PART, FOR ANY OTHER PROJECT WITHOUT THE WRITTEN AUTHORIZATION OF CH2MHILL.

3001 PGA BLVD. SUITE 300
PALM BEACH GARDENS, FL 33410
EB0000072 · AAC001992

REPAIRS AND IMPROVEMENTS AT
ZERO DUVAL AND MALLORY SQUARE
FOR
CITY OF KEY WEST, FLORIDA

CH2MHILL®

STRUCTURAL
ZERO DUVAL
OUTFLOW PIPE DETAILS

VERIFY SCALE
BAR IS ONE INCH ON ORIGINAL DRAWING.
0 1"

DATE	JANUARY 2016
PROJ	439197
DWG	DS-503

BID SET - JANUARY 2016

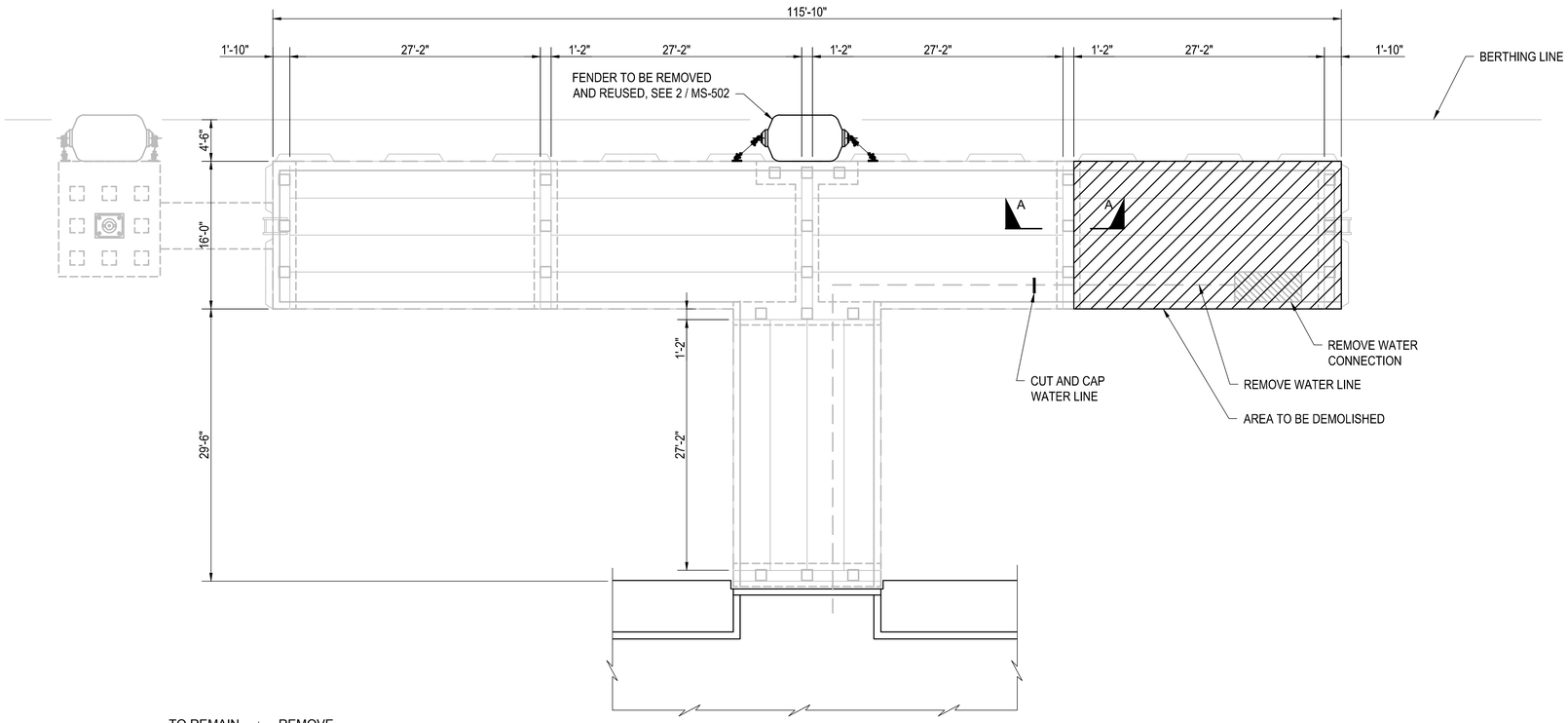

MALLORY SQUARE
T-PIER DEMOLITION PLAN

1/8" = 1'-0"

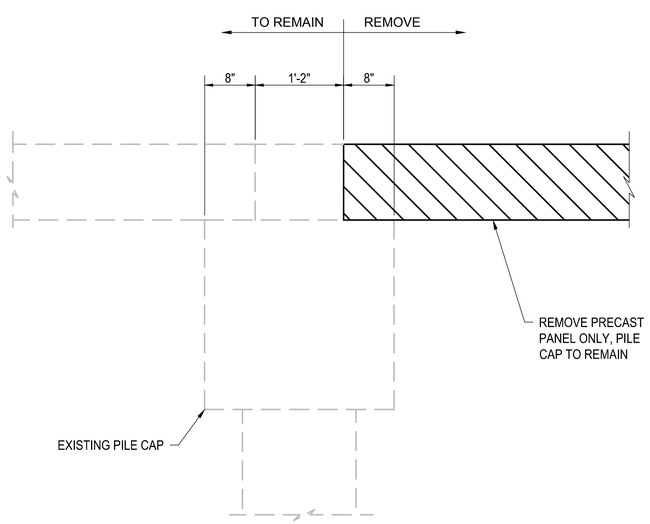

SECTION A-A

1" = 1'-0"

NOTES:

1. CUT AND CAP WATERLINE.
2. REMOVE AND STORE FLOATING FENDER, ANCHOR CHAINS AND OTHER CONNECTING HARDWARE FOR REUSE.
3. REMOVE END SPAN OF DOCK AS SHOWN. REMOVE PILES COMPLETELY BY PULLING.
4. ANY CLEATS, HANDRAILS, PLUMBING FITTINGS, AND LADDERS SHALL BE SALVAGED AND RETURNED TO THE CITY.
5. REMOVE AND STORE PAVERS IN PIER SPAN BEING DEMOLISHED FOR REINSTALLATION ON DOLPHIN.

0 4' 8' 12'
0 1" 2" 3"
1/4" = 1'-0"

BID SET

NO.	DATE	REVISION	BY	APVD

DSGN J. PRUITT | DR | CHK | APVD

CH2MHILL®
3001 PGA BLVD, SUITE 300
PALM BEACH GARDENS, FL 33410
EB0000072 · AAC001992

REPAIRS AND IMPROVEMENTS AT
ZERO DUVAL AND MALLORY SQUARE
FOR
CITY OF KEY WEST, FLORIDA

STRUCTURAL
MALLORY SQUARE
DEMOLITION PLAN

VERIFY SCALE
BAR IS ONE INCH ON ORIGINAL DRAWING.
0 1"

DATE	JANUARY 2016
PROJ	439197
DWG	MS-101

BID SET - JANUARY 2016

REUSE OF DOCUMENTS: THIS DOCUMENT, AND THE IDEAS AND DESIGNS INCORPORATED HEREIN, AS AN INSTRUMENT OF PROFESSIONAL SERVICE, IS THE PROPERTY OF CH2M HILL AND IS NOT TO BE USED, IN WHOLE OR IN PART, FOR ANY OTHER PROJECT WITHOUT THE WRITTEN AUTHORIZATION OF CH2MHILL.
© CH2M HILL 2012. ALL RIGHTS RESERVED.

FILENAME: D55-MS-101_439197.DWG PLOT DATE: 01/04/2016 PLOT TIME: 4:23 PM

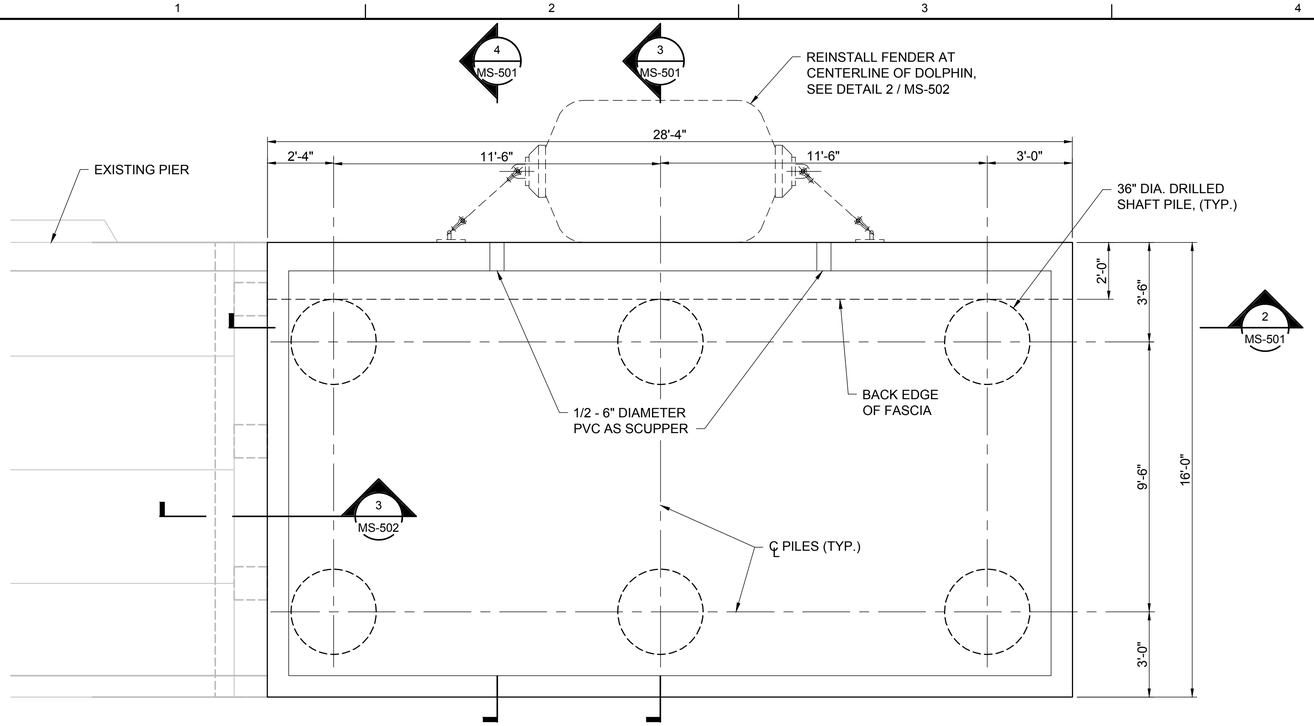

1 DOLPHIN PLAN
3/8" = 1'-0"

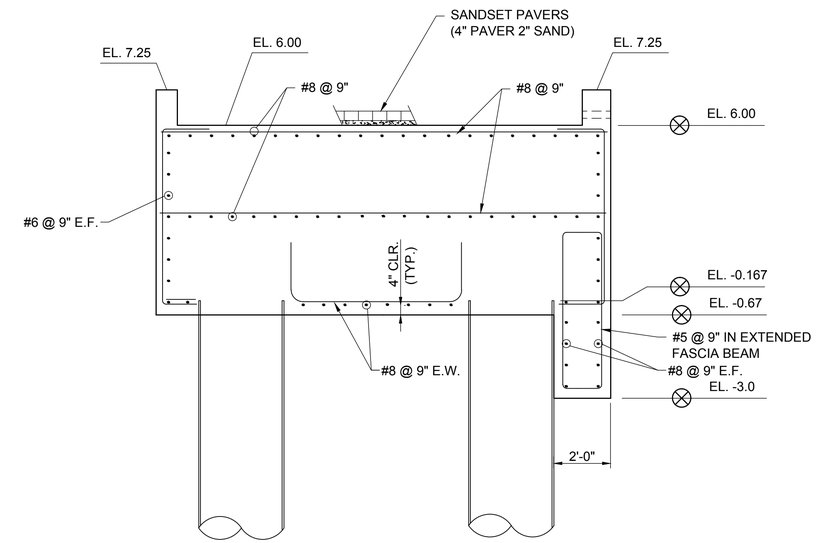

3 DOLPHIN SECTION
3/8" = 1'-0"

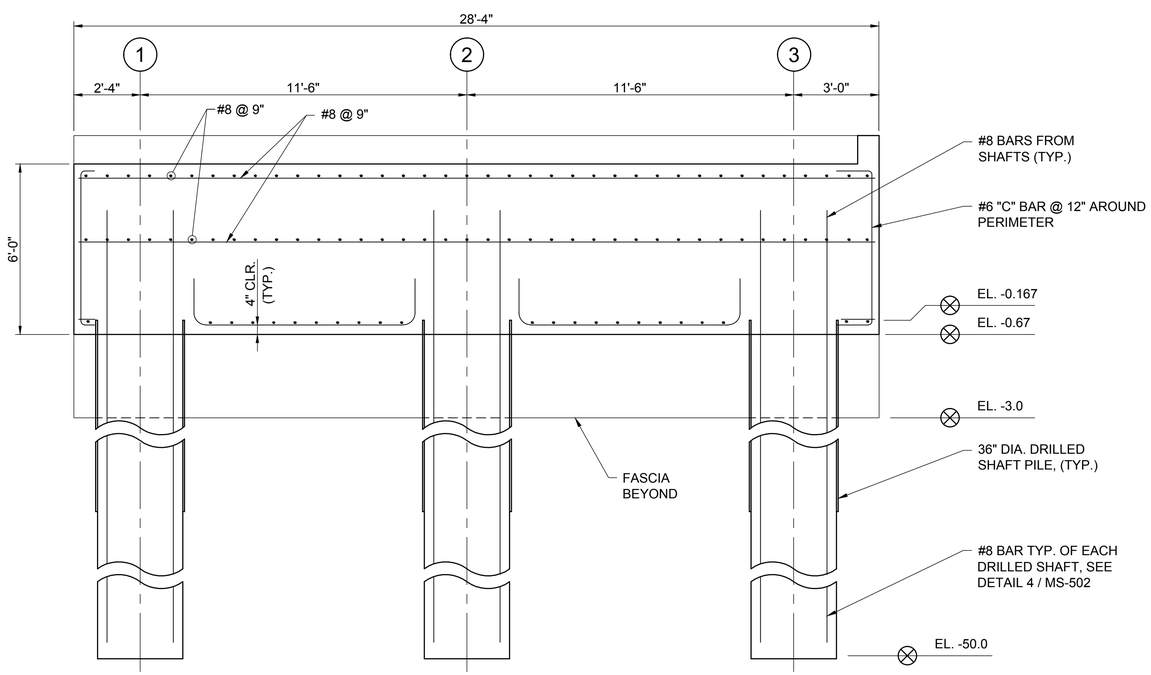

2 DOLPHIN SECTION
3/8" = 1'-0"

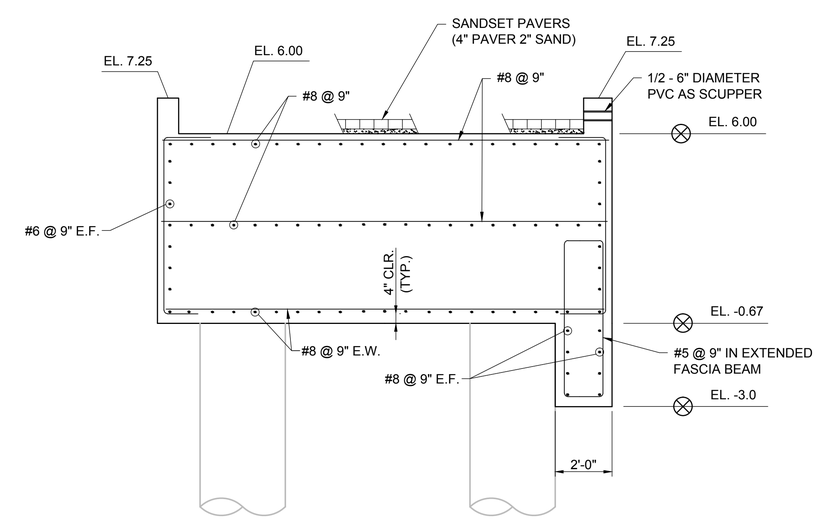

4 DOLPHIN SECTION
3/8" = 1'-0"

BID SET

NO.	DATE	REVISION	BY	APVD
DSGN	DR	CHK	APVD	
		J. PRUITT		

©CH2M HILL 2012. ALL RIGHTS RESERVED.

3001 PGA BLVD. SUITE 300
PALM BEACH GARDENS, FL 33410
EB0000072 AAC001992

REPAIRS AND IMPROVEMENTS AT
ZERO DUVAL AND MALLORY SQUARE
FOR
CITY OF KEY WEST, FLORIDA

REUSE OF DOCUMENTS: THIS DOCUMENT, AND THE IDEAS AND DESIGNS INCORPORATED HEREIN, AS AN INSTRUMENT OF PROFESSIONAL SERVICE, IS THE PROPERTY OF CH2M HILL AND IS NOT TO BE USED, IN WHOLE OR IN PART, FOR ANY OTHER PROJECT WITHOUT THE WRITTEN AUTHORIZATION OF CH2MHILL.

CH2MHILL®

STRUCTURAL
MALLORY SQUARE
DOLPHIN DETAILS

VERIFY SCALE
BAR IS ONE INCH ON ORIGINAL DRAWING.
0 1"

DATE	JANUARY 2016
PROJ	439197
DWG	MS-501

BID SET - JANUARY 2016

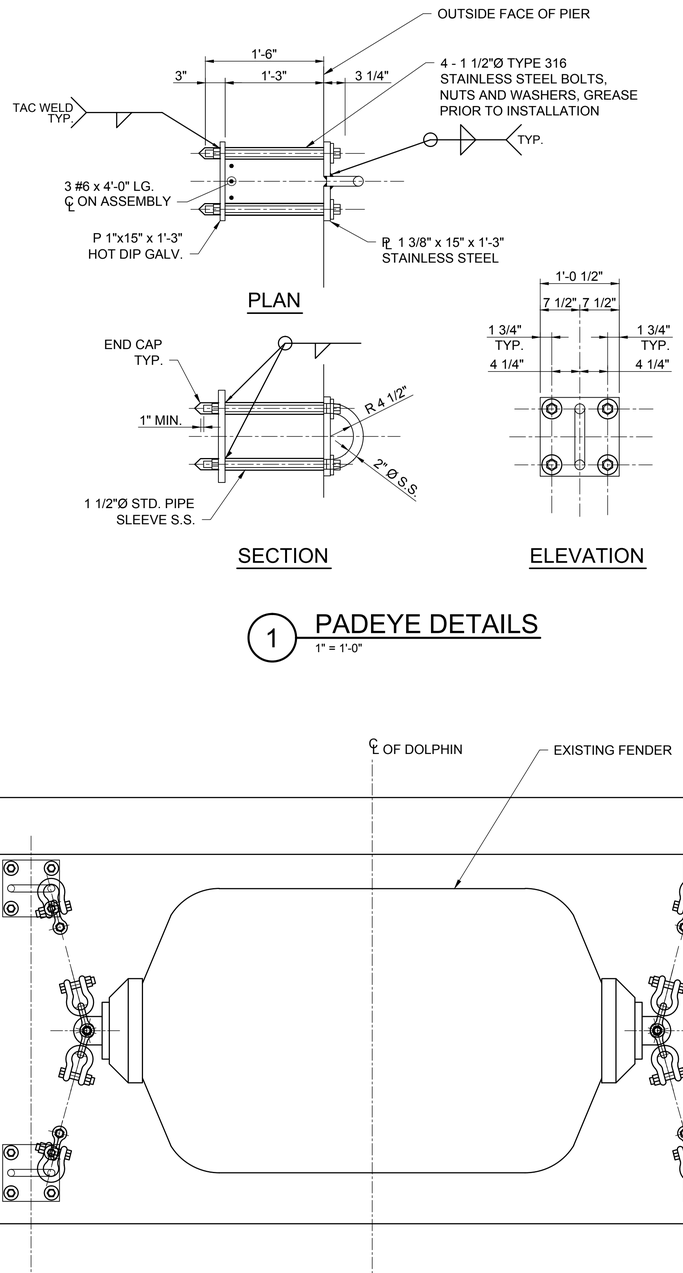

1 PADEYE DETAILS
1" = 1'-0"

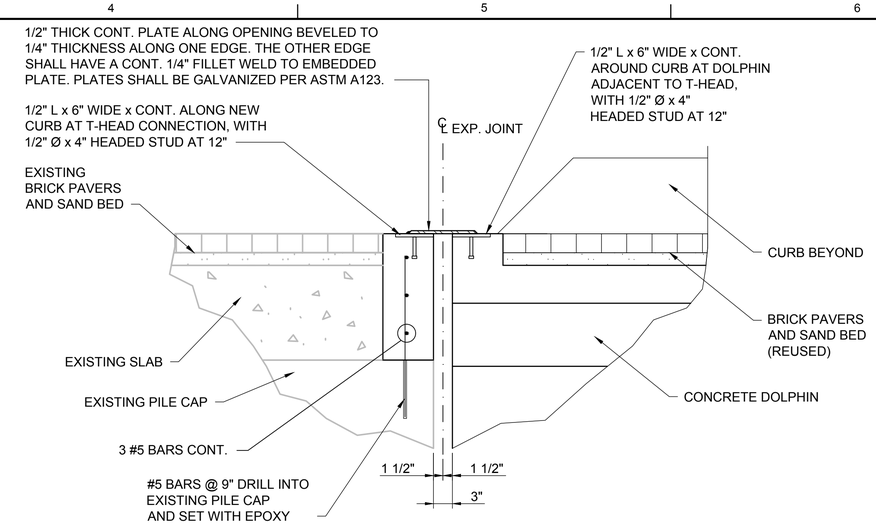

3 EXPANSION JOINT DETAIL
1" = 1'-0"

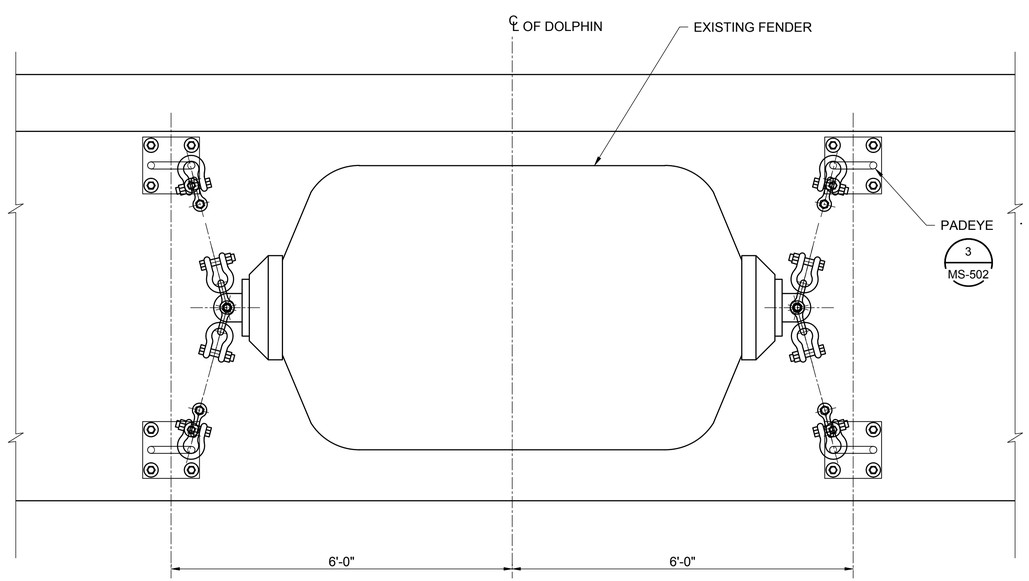

2 FENDER DETAIL
3/4" = 1'-0"

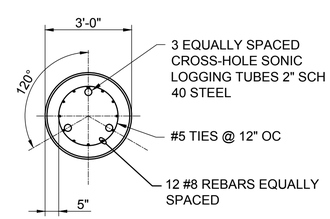

SECTION A-A
3/8"=1'-0

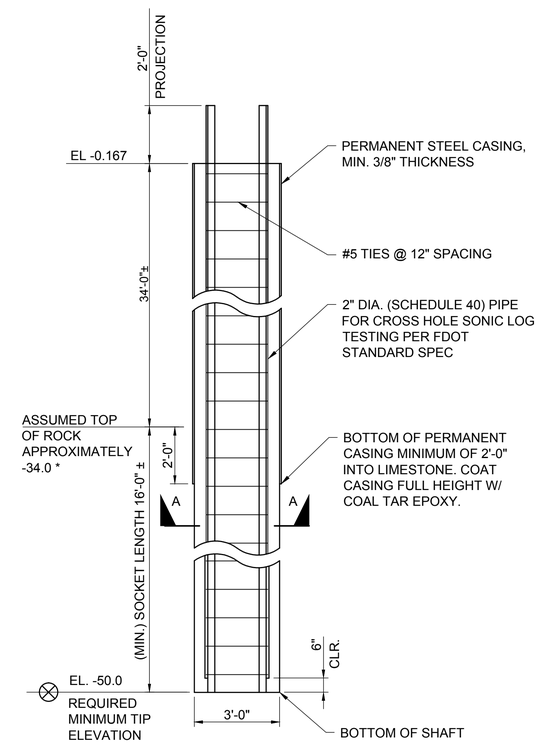

4 DRILLED SHAFT DETAILS
3/8" = 1'-0"

* CONTRACTOR SHALL CONFIRM TOP OF ROCK ELEVATION. SHOULD TOP OF ROCK ELEVATION DEVIATE FROM WHAT IS SHOWN IN THIS DRAWING, THE CONTRACOR SHALL NOTIFY THE ENGINEER IMMEDIATELY.

BID SET

NO.	DATE	REVISION	BY	APVD

DSGN J. PRUITT | DR | CHK | APVD

CH2MHILL®
3001 PGA BLVD. SUITE 300
PALM BEACH GARDENS, FL 33410
EB0000072 · AAC001992

REPAIRS AND IMPROVEMENTS AT
ZERO DUVAL AND MALLORY SQUARE
FOR
CITY OF KEY WEST, FLORIDA

STRUCTURAL
MALLORY SQUARE
DETAILS

VERIFY SCALE
BAR IS ONE INCH ON ORIGINAL DRAWING.
0 1"

DATE	JANUARY 2016
PROJ	439197
DWG	MS-502

REUSE OF DOCUMENTS: THIS DOCUMENT, AND THE IDEAS AND DESIGNS INCORPORATED HEREIN, AS AN INSTRUMENT OF PROFESSIONAL SERVICE, IS THE PROPERTY OF CH2M HILL AND IS NOT TO BE USED, IN WHOLE OR IN PART, FOR ANY OTHER PROJECT WITHOUT THE WRITTEN AUTHORIZATION OF CH2MHILL.
©CH2M HILL 2012. ALL RIGHTS RESERVED.

BID SET - JANUARY 2016

FILENAME: D55-MS-502_439197.DWG PLOT DATE: 01/04/2016 PLOT TIME: 4:31 PM