CONTRACT DOCUMENTS FOR:

ITB # 003-16

MALLORY SQUARE PUBLIC BATHROOM IMPROVEMENTS

OCTOBER 2015

MAYOR: CRAIG CATES

COMMISSIONERS:

RICHARD PAYNE

BILLY WARDLOW

JIMMY WEEKLEY

CLAYTON LOPEZ

SAM KAUFMAN

MARGARET ROMERO

PREPARED BY:
City Of Key West
Engineering Services

CITY OF KEY WEST

KEY WEST, FLORIDA

CONTRACT DOCUMENTS

For

MALLORY SQUARE PUBLIC IMPROVEMENTS

****

CONSISTING OF:
BID REQUIREMENTS
CONTRACT FORMS
CONDITIONS OF THE CONTRACT
GENERAL REQUIREMENTS
DRAWINGS

*****

KEY WEST, FLORIDA

OCTOBER 2015

Table of Contents

Page No.

PART 1 - BIDDING REQUIREMENTS

INVITATION TO BID 1
INSTRUCTIONS TO BIDDER 3
PROPOSAL FORM 9
FLORIDA BID BOND 17
ANTI – KICKBACK AFFIDAVIT 19
FLORIDA STATUTES, ON PUBLIC ENTITY CRIMES 20
INDEMNIFICATION FORM 23
LOCAL VENDORS FORM 24
DOMESTIC PARTNERSHIP AFFIDAVIT 25
CONE OF SILENCE AFFIDAVIT 26
BIDDER'S CHECKLIST 27

PART 2 - CONTRACT

CONTRACT 29

PART 3 - CONDITIONS OF THE CONTRACT

GENERAL CONDITIONS 32
SUPPLEMENTARY CONDITIONS 52

PART 4 - GENERAL REQUIREMENTS & SCOPE OF WORK

SECTION 01001 – GENERAL REQUIREMENTS 68
SECTION 01010 – SCOPE OF WORK 74
SECTION 01300 – SUBMITTALS 77

PART 5 - DRAWINGS

MALLORY SQUARE PUBLIC TOILET FACILITY ..... A-1thru -P-2
MALLORY SQUARE PUBLIC BATHROOM IMPROVEMENTS ..... 1&2

PART 1

BIDDING REQUIREMENTS

INVITATION TO BID

Sealed bids for the City of Key West ITB #003-16 MALLORY SQUARE PUBLIC BATHROOM IMPROVEMENTS, addressed to the City of Key West, will be received at the Office of the City Clerk, 3126 Flagler St., Key West Florida, 33040 until 3:30 pm on Wednesday, DECEMBER 09, 2015 and then will be publicly opened and read. Any bids received after the time and date specified will not be considered.

Please submit one (1) original, and two (2) flash drives each with one single PDF file of the sections entitled "Bidding Requirements" and "Contract Forms". Bid package is to be enclosed in a sealed envelope, clearly marked on the outside "BID FOR MALLORY SQUARE PUBLIC BATHROOM IMPROVEMENTS" addressed and delivered to the City Clerk at the address noted above.

The project contemplated consists of providing all materials, equipment and labor necessary to accomplish the following:

A. Plumbing improvements as shown on "Mallory Square Toilet Facility" drawings; and

B. Replacement of all plumbing fixtures, doors, dispensers, painting & cleaning of floors and walls as shown on "Mallory Square Public Bathroom Improvements" drawing.

Drawings and Specifications may be obtained from Demand Star by Onvia or City of Key West. Please contact Demand Star at www.demandstar.com or call 1-800-711-1712 or www.cityofkeywest-fl.gov

A Pre - Bid meeting will be held at City Manager's Conference Room, on NOVEMBER 19, 2015 @ 10:00 A.M. located at 3132 Flagler Avenue

EACH BID MUST BE SUBMITTED ON THE PRESCRIBED FORM AND ACCOMPANIED BY BID SECURITY AS PRESCRIBED IN THE INSTRUCTIONS TO BIDDERS, PAYABLE TO THE CITY OF KEY WEST, FLORIDA, IN AN AMOUNT NOT LESS THAN FIVE (5) PERCENT OF THE AMOUNT BID.

THE BIDDER MUST BE A LICENSED CONTRACTOR BY THE STATE OF FLORIDA AND SUBMIT PROOF OF SUCH WITH THE BID.

The successful Bidder shall furnish documentation showing that he is in compliance with the licensing requirements of the State and the provisions of Chapter 66 Section 87 of the Code of Ordinances of the City of Key West; within 10 days following the Notice of Award and must demonstrate that he holds at a minimum, the following licenses & certificates;

A. City of Key West Business Tax License Receipt
B. A valid Certificate of Competency issued by the Chief Building Official of Key West, Florida.

All bid bonds, insurance contracts, and certificates of insurance shall be either executed by or countersigned by a licensed resident agent of the Surety or Insurance Company having his place of

business in the State of Florida, and in all ways complying with the insurance laws of the State of Florida. Further, the said Surety or Insurance Company shall be duly licensed and qualified to do business in the State of Florida.

Before a Contract will be awarded for the work contemplated herein, the CITY will conduct such investigation as is necessary to determine the performance record and ability of the apparent low Bidder to perform the size and type of work specified under this Contract. Upon request, the Bidder shall submit such information as deemed necessary by the CITY to evaluate the Bidder's qualifications.

Any request for information concerning this project must be made in writing, per City of Key West Ordinance Section 2-773, Cone of Silence, to Janet Muccino, Project Manager, at jmuccino@cityofkeywest-fl.gov.

As stated above at the time of the bid submittal the Bidder must provide satisfactory documentation of State Licenses. The Bidder shall furnish documentation showing that he is in compliance with the licensing requirements of County, and City licenses as would be required within ten days of the award. The successful Bidder must also be able to satisfy the CITY Attorney as to such insurance coverage and legal requirements as may be demanded by the Bid in question. The CITY may reject bids for any and/or all of the following reasons: (1) for budgetary reasons, (2) if the bidder misstates or conceals a material fact in its bid, (3) if the bid does not strictly conform to the law or is non-responsive to the bid requirements, (4) if the bid is conditional, or (5) if a change of circumstances occurs making the purpose of the bid unnecessary to the CITY. The CITY may also waive any minor formalities or irregularities in any bid, (6) if such rejection is in the best interest of the CITY. The CITY may also waive any minor formalities or irregularities in any bid.

INSTRUCTIONS TO BIDDERS

1. CONTRACT DOCUMENTS

A. FORMAT

The Contract Documents are divided into parts, divisions, and sections for convenient organization and reference. Generally, there has been no attempt to divide the sections into work performed by the various building trades, work by separate subcontractors, or work required for separate facilities in the project.

B. DOCUMENT INTERPRETATION

The separate sections contained within these Contract Documents are intended to be mutually cooperative and to provide all details reasonably required for the execution of the proposed work.

Should there be any doubt as to the meaning or intent of said Contract Documents, the Bidder should request of the ENGINEER, in writing (at least ten (10) calendar days prior to bid opening) an interpretation thereof. Any interpretation or change in said Contract Documents will be made only in writing in the form of Addenda to the documents which will be furnished to all registered holders of Contract Documents. Bidders shall submit with their Bids, or indicate receipt of, all Addenda. The CITY will not be responsible for any other explanation or interpretations of said Documents.

2. GENERAL DESCRIPTION OF THE PROJECT

A general description of the work to be done is contained in the Invitation to Bid. The scope is specified in applicable parts of these Contract Documents.

3. QUALIFICATION OF CONTRACTORS

The prospective Bidders must meet the statutorily prescribed requirements before award of Contract by the CITY. Bidders must hold or obtain all licenses and/or certificates as required by the State and Local Statutes in order to bid and perform the work specified herein.

4. BIDDER'S UNDERSTANDING

Each Bidder must inform himself of the conditions relating to the execution of the work, and it is assumed that he will inspect the site and make himself thoroughly familiar with all the Contract Documents. Failure to do so will not relieve the successful Bidder of his obligation to enter into a Contract and complete the contemplated work in strict accordance with the Contract Documents. It shall be the Bidder's obligation to verify for himself and to his complete satisfaction all information concerning site and subsurface conditions.

The CITY will make available to prospective Bidders upon request and at the office of the ENGINEER, prior to bid opening, any information that he may have as to subsurface conditions

and surface topography at the worksite.

Each Bidder shall inform himself of, and the Bidder awarded a Contract shall comply with, federal, state, and local laws, statutes, and ordinances relative to the execution of the work. This requirement includes, but is not limited to, applicable regulations concerning minimum wage rates, nondiscrimination in the employment of labor, protection of public and employee safety and health, environmental protection, the protection of natural resources, fire protection, burning and non-burning requirements, permits, fees, and similar subjects.

5. TYPE OF BID

A. LUMP SUM

The BID for the work is to be submitted on a lump sum basis. Lump sum prices shall be submitted for all items of work set forth in the bid. All items required to complete the work specified but not included in the bid shall be considered incidental to those set forth in the bid.

The Bidder shall submit a Schedule of Values with the BID. It shall be broken down by trade and type of work and include the cost of all LABOR & MATERIALS for use as a basis for payment. Payment to the Contractor will be made on the measurement of the work actually performed by the Contractor as specified in the Contract Documents.

6. PREPARATION OF BIDS

A. GENERAL

All blank spaces in the BID form must be filled in, as required, preferably in BLACK ink. All price information shall be shown in both words and figures where required. No changes shall be made in the phraseology of the forms. Written amounts shall govern in case of discrepancy between the amounts stated in writing and the amounts stated in figures. In case of discrepancy between unit prices and extended totals, unit prices shall prevail.

Any BID shall be deemed informal which contains omissions, erasures, alterations, or additions of any kind, or prices uncalled for, or in which any of the prices are obviously unbalanced, or which in any manner shall fail to conform to the conditions of the published Invitation to Bid.

Only one BID from any individual, firm, partnership, or corporation, under the same or different names, will be considered. Should it appear to the CITY that any Bidder is interested in more than one Bid for work contemplated; all Bids in which such Bidder is interested will be rejected.

B. SIGNATURE

The Bidder shall sign his BID in the blank space provided therefore. If Bidder is a

corporation, the legal name of the corporation shall be set forth above, together with the signature of the officer or officers authorized to sign Contracts on behalf of the corporation. If Bidder is a partnership, the true name of the firm shall be set forth above, together with the signature of the partner or partners authorized to sign Contracts in behalf of the partnership. If signature is by an agent, other than an officer of a corporation or a member of a partnership, a notarized power-of-attorney must be on file with the CITY prior to opening of Bids or submitted with the Bid, otherwise the Bid will be regarded as not properly authorized.

C. SPECIAL BIDDING REQUIREMENTS

The Bidder's attention is brought to the hiring practices and licenses and permits of the City of Key West. These are defined in the addition to Article 39, ORDINANCES, PERMITS, AND LICENSES, as set forth in the Supplementary Conditions.

The Bidder shall submit with his Bid his experience record showing his experience and expertise in roof construction and related work. Such experience record shall provide at least five current or recent projects (within the past 5 years) of similar work, within the State Florida and preferably Monroe County. For each project the following information shall be provided:

1. Description and location of work.
2. Contract amount.
3. Dates work was performed.
4. Owner.
5. Name of Owner's contact person and phone number.
6. ENGINEER.
7. Name of ENGINEER's contact person and phone number.

The bidder shall submit with his bid a list of items to be performed by his own labor and that performed by subcontractors or others.

D. ATTACHMENTS

Bidder shall complete and submit the following forms with his bid:

Anti-Kickback Affidavit
Public Entity Crimes Form
Indemnification Form
City of Key West Business License Tax Receipt
Local Vendors Form
Domestic Partnership Affidavit
Cone of Silence Affidavit

E. PUBLIC ENTITY CRIMES FORM

Pursuant to the requirements of Chapter 287.133, Laws of Florida, pertaining to the sworn

statement on Public Entity Crimes and the Convicted Vendor List, all Bidders shall submit a signed and notarized statement with their Bid on the form provided herein.

7. STATE AND LOCAL SALES AND USE TAXES

Unless the Supplementary Conditions contains a statement that the CITY is exempt from state sales tax on materials incorporated into the work due to the qualification of the work under this Contract, the Contractor, as required by the laws and statutes of the state and its political subdivisions, shall pay all state and local sales and use taxes. Prices quoted in the Bid shall include all nonexempt sales and use taxes, unless provision is made in the Bid form to separately itemize the tax.

8. SUBMISSION OF BIDS

All BIDS must be submitted not later than the time prescribed, at the place, and in the manner set forth in the Invitation to Bid. BIDS must be made on the BID forms provided herewith, **submit one (1) ORIGINAL and two (2) FLASH DRIVES each containing a single PDF file of the entire bid package.**

Each BID must be submitted in a sealed envelope, so marked as to indicate the Bidder's name and its contents (project name and number) without being opened, and addressed in conformance with the instructions in the Invitation to Bid.

9. MODIFICATION OR WITHDRAWAL OF BIDS

Prior to the time and date designated for receipt of BIDS, any BID submitted may be withdrawn by notice to the party receiving BIDS at the place designated for receipt of BIDS. Such notice shall be in writing over the signature of the Bidder or by telegram. If by telegram, written confirmation over the signature of the Bidder shall be mailed and postmarked on or before the date and time set for receipt of BID. No BID may be withdrawn after the time scheduled for opening of BIDS, unless the time specified in paragraph AWARD OF CONTRACT of these Instructions to Bidders shall have elapsed.

10. BID SECURITY

BIDS must be accompanied by cash, a certified check, or cashier's check drawn on a bank in good standing, or a bid bond issued by a Surety authorized to issue such bonds in the state where the work is located, in the amount of five (5) percent of the total amount of the Bid submitted. This bid security shall be given as a guarantee that the Bidder will not withdraw his BID for a period of sixty (60) days after bid opening, and that if awarded the Contract, the successful Bidder will execute the attached Contract and furnish properly executed Performance and Payment Bonds (**Not required for of this contract**), each in the full amount of the Contract price within the time specified. Agent and Surety phone numbers must be provided.

The Attorney-in-Fact who executes this bond in behalf of the Surety must attach a notarized copy of his power-of-attorney as evidence of his authority to bind the Surety on the date of execution of the bond. Where State Statute requires, certification by a resident agent shall also be provided.

If the Bidder elects to furnish a Bid Bond, he shall use the Bid Bond form bound herewith, or one conforming substantially thereto in form and content.

11. RETURN OF BID SECURITY

Within 15 days after the award of the Contract, the CITY will return the bid securities to all Bidders who's BIDS are not to be further considered in awarding the Contract. Retained bid securities will be held until the Contract has been finally executed, after which all bid securities, other than Bidders' bonds and any guarantees, which have been forfeited, will be returned to the respective Bidders whose Bids they accompanied.

12. AWARD OF CONTRACT

Within ninety (90) calendar days after the opening of Bids, the CITY will accept one of the Bids or will act in accordance with the following paragraphs. The acceptance of the Bid will be by written notice of award, mailed to the office designated in the Bid, or delivered to the Bidder's representative. In the event of failure of the lowest responsive, responsible Bidder to sign the Contract, provide additional documents, insurance certificate(s) and evidence of holding required licenses and certificates, the Owner may award the Contract to the next lowest responsive, responsible Bidder. Such award, if made, will be made within one hundred & twenty (120) days after the opening of Bids.

The CITY reserves the right to accept or reject any or all Bids, and to waive any informalities and irregularities in said Bids.

13. BASIS OF AWARD

The award will be made by the Owner on the basis of the BID from the lowest, responsive, responsible BIDDER which, in the Owner's sole and absolute judgment will best serve the interest of the Owner.

14. EXECUTION OF CONTRACT

The successful Bidder shall, within ten (10) working days after receiving Notice of Award, sign and deliver to the CITY an original Contract and two (2) copies in the form hereto attached, together with the insurance certificate as required in the Contract Documents and evidence of holding required licenses and certificates. Within 10 working days after receiving the signed Contract from the successful Bidder, the City's authorized agent will sign the Contract. Signature by both parties constitutes execution of the Contract.

16. FAILURE TO EXECUTE CONTRACT AND FURNISH BID BOND

The Bidder who has a Contract awarded to him and who fails to promptly and properly execute the Contract shall forfeit the bid security that accompanied his bid, and the bid security shall be retained as liquidated damages by the CITY, and it is agreed that this said sum is a fair estimate of the amount of damages the CITY will sustain in case the Bidder fails to enter into a Contract. Bid

security deposited in the form of cash, a certified check, or cashier's check shall be subject to the same requirement as a Bid Bond.

17. TIME OF COMPLETION

The time of completion of the work to be performed under this Contract is the essence of the Contract. Delays and extensions of time may be allowed in accordance with the provisions stated in the General Conditions.

When the Contractor receives a Notice to Proceed, he shall commence work as soon as possible and shall complete all work within the number of calendar days stipulated in this Bid.

The term of this contract will be **90** calendar days.

NOTE TO BIDDER: Use preferably BLACK ink for completing this BID form.

PROPOSAL FORM

To:	The City of Key West
Address:	3126 Flagler Street, Key West, Florida 33041
Project Title:	MALLORY SQUARE PUBLIC BATHROOM IMPROVEMENTS ITB # 003-16

Bidder's contact person for additional information on this BID:

Company Name: _____

Contact Name & Telephone #: _____

Email Address: _____

BIDDER'S DECLARATION AND UNDERSTANDING

The undersigned, hereinafter called the Bidder, declares that the only persons or parties interested in this Bid are those named herein, that this Bid is, in all respects, fair and without fraud, that it is made without collusion with any official of the Owner, and that the Bid is made without any connection or collusion with any person submitting another Bid on this Contract.

The Bidder further declares that he has carefully examined the Contract Documents for the construction of the project, that he has personally inspected the site, that he has satisfied himself as to the quantities involved, including materials and equipment, and conditions of work involved, including the fact that the description of the quantities of work and materials, as included herein, is brief and is intended only to indicate the general nature of the work and to identify the said quantities with the detailed requirements of the Contract Documents, and that this Bid is made according to the provisions and under the terms of the Contract Documents, which Documents are hereby made a part of this Bid.

CONTRACT EXECUTION

The Bidder agrees that if this Bid is accepted, he will, within 10 days, not including Sundays and legal holidays, after Notice of Award, sign the Contract in the form annexed hereto, and will at that time, deliver to the Owner evidence of holding required licenses and certificates, and will, to the extent of his Bid, furnish all machinery, tools, apparatus, and other means of construction and do the work and furnish all the materials necessary to complete all work as specified or indicated in the Contract Documents.

CERTIFICATES OF INSURANCE

Bidder agrees to furnish the Owner, before commencing the work under this Contract, the certificates of insurance as specified in these Documents.

START OF CONSTRUCTION AND CONTRACT COMPLETION TIME

The Bidder further agrees to begin work within 10 calendar days after the date of the Notice to proceed and to complete the project, in all respects within 90calendar days after the date of the Notice to Proceed.

LIQUIDATED DAMAGES

In the event the Bidder is awarded the Contract and shall fail to complete the work within the time limit or extended time limit agreed upon, as more particularly set forth in the Contract Documents, liquidated damages shall be paid to the Owner at the rate of $250.00 per day for all work awarded until the work has been satisfactorily completed as provided by the Contract Documents. Sundays and legal holidays shall be excluded in determining days in default.

ADDENDA

The Bidder hereby acknowledges that he has received Addenda No's. _____, _____, ____, _____, ____, ____, _____, _____, _____, _____, _____, _____, _____,
(Bidder shall insert No. of each Addendum received) and agrees that all addenda issued are hereby made part of the Contract Documents, and the Bidder further agrees that his Bid(s) includes all impacts resulting from said addenda.

SALES AND USE TAXES

The Bidder agrees that all federal, state, and local sales and use taxes are included in the stated bid prices for the work.

LUMP SUM & UNIT PRICE ITEMS

The Bidder further proposes to accept as full payment for the work proposed herein the amounts computed under the provisions of the Contract Documents and based on the following lump sum amounts. The Bidder agrees that the lump sum represent a true measure of the labor and materials required to perform the work, including all allowances for overhead and profit for each type and unit of work called for in these Contract Documents.

PROPOSAL FORM

TOTAL LUMP SUM BASE BID:
(Includes all permitting, fixtures, equipment, material & labor)

LUMP SUM $ _____

_____Dollars & _____Cents
(amount written in words)

Payment for materials & equipment authorized by the Owner in a written Change Order but not listed in the Schedule of Values will be provided at suppliers invoice plus 15 %.

List items to be performed by CONTRACTOR's own forces and the estimated total cost of these items. (Use additional sheets if necessary.)

_____	_____
_____	_____
_____	_____
_____	_____
_____	_____
_____	_____

SUBCONTRACTORS

The Bidder further proposes that the following subcontracting firms or businesses will be awarded subcontracts for the following portions of the work in the event that the Bidder is awarded the Contract:

_____
Name

_____, _____, _____, _____
Street City State Zip

Name

_____, _____, _____ ,_____
Street City State Zip

_____
Name

_____, _____, _____,_____
Street City State Zip

_____
Name

_____, _____, _____,_____
Street City State Zip

SURETY

_____ whose address is

_____, _____, _____, _____
Street City State Zip

BIDDER

The name of the Bidder submitting this Bid is

_____ doing business at

_____, _____, _____, _____
Street City State Zip

which is the address to which all communications concerned with this Bid and with the Contract shall be sent.

The names of the principal officers of the corporation submitting this Bid, or of the partnership, or of all persons interested in this Bid as principals are as follows:

_____ _____

_____ _____

_____ _____

_____ _____

_____ _____

If Sole Proprietor or Partnership

IN WITNESS hereto the undersigned has set his (its) hand this _____ day of _____ 2015.

_____
Signature of Bidder

_____
Title

If Corporation

IN WITNESS WHEREOF the undersigned corporation has caused this instrument to be executed and its seal affixed by its duly authorized officers this _____ day of _____ 2015.

(SEAL)

_____
Name of Corporation

By _____

Title _____
Attest_____
Secretary

EXPERIENCE OF BIDDER

The Bidder states that he is an experienced CONTRACTOR and has completed similar projects within the last 5 years.

(List similar projects, with types, names of OWNERs, construction costs, ENGINEERs, and references with phone numbers. Use additional sheets if necessary.

_____

_____

_____

_____

_____

_____

_____

_____

_____

_____

_____

_____

FLORIDA BID BOND

BOND NO. _____

AMOUNT: $ _____

KNOW ALL MEN BY THESE PRESENTS, that _____

_____

hereinafter called the PRINCIPAL, and _____

_____

a corporation duly organized under the laws of the State of _____

having its principal place of business at _____

_____in the State of _____,

and authorized to do business in the State of Florida, as SURETY, are held and firmly bound unto

_____

hereinafter called the OBLIGEE, in the sum of_____

DOLLARS ($_____) for the payment for which we bind ourselves, our heirs, executors, administrators, successors, and assigns, jointly and severally, firmly by these present.

THE CONDITION OF THIS BOND IS SUCH THAT:

WHEREAS, the PRINCIPAL is herewith submitting his or its Bid for the MALLORY SQUARE PUBLIC BATHROOM IMPROVEMENTS, said Bid, by reference thereto, being hereby made a part hereof.

WHEREAS, the PRINCIPAL contemplates submitting or has submitted a bid to the OBLIGEE for the furnishing of all labor, materials (except those to be specifically furnished by the CITY), equipment, machinery, tools, apparatus, means of transportation for, and the performance of the work covered in the Bid and the detailed Specifications, entitled:

MALLORY SQUARE PUBLIC BATHROOM IMPROVEMENTS

WHEREAS, it was a condition precedent to the submission of said bid that a cashier's check, certified check, or bid bond in the amount of five (5) percent of the base bid be submitted with said bid as a guarantee that the Bidder would, if awarded the Contract, enter into a written Contract with the CITY for the performance of said Contract, within 10 working days after written notice having been given of the award of the Contract.

NOW, THEREFORE, the conditions of this obligation are such that if the PRINCIPAL within 10 consecutive calendar days after written notice of such acceptance, enters into a written Contract with the OBLIGEE and furnishes the Performance and Payment Bonds **(Not required for this contract),** each in an amount equal to 100 percent of the base bid, satisfactory to the CITY, then this obligation shall be void; otherwise the sum herein stated shall be due and payable to the OBLIGEE and the Surety herein agrees to pay said sum immediately upon demand of the OBLIGEE in good and lawful money of the United States of America, as liquidated damages for failure thereof of said PRINCIPAL.

Signed and sealed this _____ day of _____, 2015.

PRINCIPAL

By_____

STATE OF _____)
: SS
COUNTY OF _____)

_____
SURETY

By _____

ANTI – KICKBACK AFFIDAVIT

STATE OF _____)
: SS
COUNTY OF _____)

I, the undersigned hereby duly sworn, depose and say that no portion of the sum herein bid will be paid to any employees of the City of Key West as a commission, kickback, reward or gift, directly or indirectly by me or any member of my firm or by an officer of the corporation.

By: _____

Sworn and subscribed before me this _____day of _____, 2015.

NOTARY PUBLIC, State of _____ at Large

My Commission Expires:

SWORN STATEMENT UNDER SECTION 287.133(3)(A)
FLORIDA STATUTES, ON **PUBLIC ENTITY CRIMES**

THIS FORM MUST BE SIGNED IN THE PRESENCE OF A NOTARY PUBLIC OR OTHER OFFICER AUTHORIZED TO ADMINISTER OATHS.

1. This sworn statement is submitted with Bid or Bid for _____

   _____

2. This sworn statement is submitted by_____
   (Name of entity submitting sworn statement)

   whose business address is _____

   _____

   and (if applicable) its Federal Employer Identification Number (FEIN) is_____

   _____

   (If the entity has no FEIN, include the Social Security Number of the individual

   signing this sworn statement _____

3. My name is _____
   (Please print name of individual signing)

   and my relationship to the entity named above is _____

4. I understand that a "public entity crime" as defined in Paragraph 287.133(1)(g), Florida Statutes, means a violation of any state or federal law by a person with respect to and directly related to the transaction of business with any public entity or with an agency or political subdivision of any other state or with the United States, including but not limited to, any bid or contract for goods or services to be provided to any public or an agency or political subdivision of any other state or of the United States and involving antitrust, fraud, theft, bribery, collusion, racketeering, conspiracy, material misrepresentation.

5. I understand that "convicted" or "conviction" as defined in Paragraph 287.133(1)(b), Florida Statutes, means a finding of guilt or a conviction of a public entity crime, with or without an adjudication guilt, in any federal or state trial court of record relating to charges brought by indictment information after July 1, 1989, as a result of a jury verdict, nonjury trial, or entry of a plea of guilty or nolo contendere.

6. I understand that an "affiliate" as defined in Paragraph 287.133(1)(a), Florida Statutes, means

    a. A predecessor or successor of a person convicted of a public entity crime; or

    b. An entity under the control of any natural person who is active in the management of the entity and who has been convicted of a public entity crime. The term "affiliate" includes those officers, directors, executives, partners, shareholders, employees, members, and agents who are active in the management of an affiliate. The ownership by one person of shares constituting controlling interest in another person, or a pooling of equipment or income among persons when not for fair market value under an arm's length agreement, shall be a prima facie case that one person controls another person. A person who knowingly enters into a joint venture with a person who has been convicted of a public entity crime in Florida during the preceding 36 months shall be considered an affiliate.

7. I understand that a "person" as defined in Paragraph 287.133(1)(8), Florida Statutes, means any natural person or entity organized under the laws of any state or of the United States with the legal power to enter into a binding contract and which bids or applies to bid on contracts for the provision of goods or services let by a public entity, or which otherwise transacts or applies to transact business with public entity. The term "person" includes those officers, directors, executives, partners, shareholders, employees, members, and agents who are active in management of an entity.

8. Based on information and belief, the statement which I have marked below is true in relation to the entity submitting this sworn statement. (Please indicate which statement applies).

    ____Neither the entity submitting this sworn statement, nor any officers, directors, executives, partners, shareholders, employees, members, or agents who are active in management of the entity, nor any affiliate of the entity have been charged with and convicted of a public entity crime subsequent to July 1, 1989, AND (Please indicate which additional statement applies.)

    _____There has been a proceeding concerning the conviction before a hearing of the State of Florida, Division of Administrative Hearings. The final order entered by the hearing officer did not place the person or affiliate on the convicted vendor list. (Please attach a copy of the final order.)

    _____The person or affiliate was placed on the convicted vendor list. There has been a subsequent proceeding before a hearing officer of the State of

    Florida, Division of Administrative Hearings. The final order entered by the hearing officer determined that it was in the public interest to remove the person or affiliate from the convicted vendor list. (Please attach a copy of the final order.)

_____The person or affiliate has not been put on the convicted vendor list. (Please describe any action taken by or pending with the Department of General Services.)

_____
(Signature)

_____
(Date)

STATE OF_____

COUNTY OF_____

PERSONALLY APPEARED BEFORE ME, the undersigned authority,

_____who, after first being sworn by me, affixed his/her
(Name of individual signing)

Signature in the space provided above on this_____day of _____ , 2015.

My commission expires:

_____
NOTARY PUBLIC

INDEMNIFICATION

To the fullest extent permitted by law, the CONTRACTOR expressly agrees to indemnify and hold harmless the City of Key West, their officers, directors, agents, and employees (herein called the "indemnitees") from liabilities, damages, losses and costs, including, but not limited to, reasonable attorney's fees and court costs, such legal expenses to include costs incurred in establishing the indemnification and other rights agreed to in this Paragraph, to persons or property, to the extent caused by the negligence, recklessness, or intentional wrongful misconduct of the CONTRACTOR, its Subcontractors or persons employed or utilized by them in the performance of the Contract. Claims by indemnitees for indemnification shall be limited to the amount of CONTRACTOR's insurance or $1 million per occurrence, whichever is greater. The parties acknowledge that the amount of the indemnity required hereunder bears a reasonable commercial relationship to the Contract and it is part of the project specifications or the bid documents, if any.

The indemnification obligations under the Contract shall not be restricted in any way by any limitation on the amount or type of damages, compensation, or benefits payable by or for the CONTRACTOR under workers' compensation acts, disability benefits acts, or other employee benefits acts, and shall extend to and include any actions brought by or in the name of any employee of the CONTRACTOR or of any third party to whom CONTRACTOR may subcontract a part or all of the Work. This indemnification shall continue beyond the date of completion of the work.

CONTRACTOR: _____ SEAL:

_____
Address

_____
Signature

_____
Print Name

_____
Title

DATE: _____

LOCAL VENDOR CERTIFICATION PURSUANT TO CKW ORDINANCE 09-22 SECTION 2-798

The undersigned, as a duly authorized representative of the vendor listed herein, certifies to the best of his/her knowledge and belief, that the vendor meets the definition of a "Local Business." For purposes of this section, "local business" shall mean a business which:

a. Principle address as registered with the FL Department of State located within 30 miles of the boundaries of the city, listed with the chief licensing official as having a business tax receipt with its principle address within 30 miles of the boundaries of the city for at least one year immediately prior to the issuance of the solicitation.

b. Maintains a workforce of at least 50 percent of its employees from the city or within 30 miles of its boundaries.

c. Having paid all current license taxes and any other fees due the city at least 24 hours prior to the publication of the call for bids or request for Bids.

- Not a local vendor pursuant to Ordinance 09-22 Section 2-798
- Qualifies as a local vendor pursuant to Ordinance 09-22 Section 2-798

If you qualify, please complete the following in support of the self-certification & submit copies of your County and City business licenses. Failure to provide the information requested will result in denial of certification as a local business.

Business Name _____ Phone: _____

Current Local Address: _____ Fax:_____
(P.O Box numbers may not be used to establish status)

Length of time at this address:_____

_____ Date: _____
Signature of Authorized Representative

STATE OF_____ COUNTY OF_____

The foregoing instrument was acknowledged before me this _____day of_____, 2015.

By_____, of _____
(Name of officer or agent, title of officer or agent) (Name of corporation acknowledging)

or has produced identification_____as identification
(Type of identification)

_____
Signature of Notary

_____
Print, Type or Stamp Name of Notary

_____
Title or Rank

Return Completed form with
Supporting documents to:
City of Key West Purchasing

EQUAL BENEFITS FOR DOMESTIC PARTNERS AFFIDAVIT

STATE OF _____)
: SS
COUNTY OF _____)

I, the undersigned hereby duly sworn, depose and say that the firm of _____ provides benefits to domestic partners of its employees on the same basis as it provides benefits to employees' spouses per City of Key West Ordinance Sec. 2-799.

By: _____

Sworn and subscribed before me this

_____ Day of _____, 2015.

_____

NOTARY PUBLIC, State of _____ at Large

My Commission Expires: _____

CONE OF SILENCE AFFIDAVIT

STATE OF _____)
: SS
COUNTY OF _____)

I the undersigned hereby duly sworn depose and say that all owner(s), partners, officers, directors, employees and agents representing the firm of _____ have read and understand the limitations and procedures regarding communications concerning City of Key West issued competitive solicitations pursuant to City of Key West Ordinance Section 2-773 Cone of Silence.

Sworn and subscribed before me this

_____ Day of _____, 2015.

_____

NOTARY PUBLIC, State of _____ at Large

My Commission Expires: _____

BIDDER'S CHECKLIST

(Note: The purpose of this checklist is to serve as a reminder of major items to be addressed in submitting a bid and is not intended to be all inclusive. It does not alleviate the Bidder from the responsibility of becoming familiar with all aspects of the Contract Documents and proper completion and submission of his bid.)

1.	All Contract Documents thoroughly read and understood.	[ ]
2.	All blank spaces in Bid filled in, using black ink.	[ ]
3.	Total and unit prices added correctly and attached Schedule of Values	[ ]
4.	Addenda acknowledged.	[ ]
5.	Subcontractors are named as indicated in the Bid.	[ ]
6.	Experience record included.	[ ]
7.	Bid signed by authorized officer.	[ ]
8.	Bid Bond completed and executed, including power-of-attorney dated the same date as Bid Bond.	[ ]
9.	Bidder familiar with federal, state, and local laws, ordinances, rules and regulations affecting performance of the work.	[ ]
10.	Bidder, if successful, able to obtain and/or demonstrate possession of required licenses and certificates within (10) ten calendar days after receiving a Notice of Award.	[ ]
11.	BID submitted intact with the volume entitled “Bidding Requirements” and “Contract Forms”, 1 original, and 2 flash drives as stated in the invitation to bid.	[ ]
12.	Bid Documents submitted in sealed envelope and addressed and labeled in conformance with the instructions in the Invitation to Bid.	[ ]

PART 2

CONTRACT FORMS

CONTRACT

This Contract, made and entered into this _____ day of _____ 2016,

by and between the CITY OF KEY WEST, hereinafter called the "Owner", and_____

_____

hereinafter called the "Contractor";

WITNESSETH:

The Contractor, in consideration of the sum to be paid him by the Owner and of the covenants and agreements herein contained, hereby agrees at his own proper cost and expense to do all the work and furnish all the materials, tools, labor, and all appliances, machinery, and appurtenances for ITB # 003-16 MALLORY SQUARE PUBLIC RESTROOM IMPROVEMENTS, Key West, Florida to the extent of the Bid made by the Contractor, dated the _____ th day of _____ 2015, all in full compliance with the Contract Documents referred to herein.

The CONTRACT DOCUMENTS, including the signed copy of the BID, BID BOND, CONTRACT FORM, SUMMARY OF WORK, SPECIFICATIONS, DRAWINGS, GENERAL & SUPPLEMENTARY CONDITIONS OF THE CONTRACT.

In consideration of the performance of the work as set forth in these Contract Documents, the Owner agrees to pay to the Contractor the amount bid in the Bid as adjusted in accordance with the Contract Documents, or as otherwise herein provided, and to make such payments in the manner and at the times provided in the Contract Documents.

The Contractor agrees to complete the work within ninety (90) days and to accept as full payment hereunder the amounts computed as determined by the Contract Documents and based on the said BID.

The Contractor agrees to remedy all defects appearing in the work or developing in the materials furnished and the workmanship performed under this Contract during the warranty period after the date of final acceptance of the work by the Owner, and further agrees to indemnify and save the Owner harmless from any costs encountered in remedying such defects.

It is agreed that the Contract, based upon the BID, shall be fully complete within the stated number of consecutive calendar days from the date the Notice to Proceed is issued.

In the event the Contractor fails to complete the work within the time limit or extended time limit agreed upon, as more particularly set forth in the Contract Documents, liquidated damages shall be paid at a rate of $250.00 per day. Sundays and legal holidays shall be included in determining days in default.

This contract will automatically expire upon completion of the project. Contractors warranty obligations remain in effect.

IN WITNESS WHEREOF, we, the parties hereto, each herewith subscribe the same this

_____ Day of _____, A.D., 2016.

CITY OF KEY WEST

By_____

Title___City Manager_____

CONTRACTOR

By_____

Title_____

PART 3

CONDITIONS OF THE CONTRACT

GENERAL CONDITIONS
CONTENTS

Article

DEFINITIONS

1. AS APPROVED
2. AS SHOWN, AND AS INDICATED
3. BIDDER
4. CONTRACT DOCUMENTS
5. CONTRACTOR
6. CONTRACT COMPLETION
7. DAYS
8. DRAWINGS
9. ENGINEER
10. NOTICE
11. OR EQUAL
12. OWNER
13. PLANS
14. SPECIFICATIONS
15. NOTICE TO PROCEED
16. SUBSTANTIAL COMPLETION
17. WORK

CONTRACT DOCUMENTS

18. INTENT OF CONTRACT DOCUMENTS
19. DISCREPANCIES AND OMISSIONS
20. CHANGES IN THE WORK
21. EXAMINATION AND VERIFICATION OF CONTRACT DOCUMENTS
22. DOCUMENTS TO BE KEPT ON THE JOBSITE
23. ADDITIONAL CONTRACT DOCUMENTS
24. OWNERSHIP OF CONTRACT DOCUMENTS

THE ENGINEER

25. AUTHORITY OF THE ENGINEER
26. DUTIES AND RESPONSIBILITIES OF THE ENGINEER
27. LIMITATIONS ON ENGINEER'S RESPONSIBILITIES
28. REJECTED WORK
29. LINES AND GRADES
30. SUBMITTALS
31. DETAIL DRAWINGS AND INSTRUCTIONS

THE CONTRACTOR AND HIS EMPLOYEES

32. CONTRACTOR, AN INDEPENDENT AGENT
32. (a) ASSIGNMENT OF CONTRACT
33. SUBCONTRACTING
34. INSURANCE AND LIABILITY
    A. GENERAL
    B. CONTRACTOR AND SUB-CONTRACTOR INSURANCE
    C. COMPENSATION AND EMPLOYER'S LIABILITY INSURANCE
    D. GENERAL LIABILITY INSURANCE (INCLUDING AUTOMOBILE)
    E. BUILDER'S RISK ALL RISK INSURANCE
    F. NO PERSONAL LIABILITY OF PUBLIC OFFICIALS
35. INDEMNITY
36. EXCLUSION OF CONTRACTOR CLAIMS
37. TAXES AND CHARGES
38. REQUIREMENTS OF STATE LAW FOR PUBLIC WORKS PROJECTS
39. CODES, ORDINANCES, PERMITS, AND LICENSES
40. SUPERINTENDENCE
41. RECEPTION OF ENGINEER'S COMMUNICATIONS
42. SAFETY
43. PROTECTION OF WORK AND PROPERTY
44. RESPONSIBILITY OF CONTRACTOR TO ACT IN AN EMERGENCY
45. MATERIALS AND APPLIANCES
46. CONTRACTORS' AND MANUFACTURERS' COMPLIANCE WITH STATE SAFETY, OSHA AND OTHER CODE REQUIREMENTS
47. SUBSTITUTION OF MATERIALS
48. TESTS, SAMPLES, AND OBSERVATIONS
49. ROYALTIES AND PATENT
50. CONTRACTOR'S RIGHT TO TERMINATE CONTRACT
51. CORRECTION OF DEFECTIVE WORK DURING WARRANTY PERIOD

PROGRESS OF THE WORK

52. BEGINNING OF THE WORK
53. SCHEDULES AND PROGRESS REPORTS
54. PROSECUTION OF THE WORK
55. OWNER'S RIGHT TO RETAIN IMPERFECT WORK
56. OWNER'S RIGHT TO DO WORK
57. OWNER'S RIGHT TO TRANSFER EMPLOYMENT
58. DELAYS AND EXTENSION OF TIME
59. DIFFERING SITE CONDITION

GENERAL CONDITIONS
CONTENTS

Article

60. LIQUIDATED DAMAGES
61. OTHER CONTRACTS
62. USE OF PREMISES
63. SUBSTANTIAL COMPLETION DATE
64. PERFORMANCE TESTING
65. OWNER'S USE OF PORTION OF THE WORK
66. CUTTING AND PATCHING
67. CLEANING UP

PAYMENT

68. CHANGE ORDERS
A. UNIT PRICE
B.LUMP SUM
C. COST REIMBURSEMENT WORK
69. PARTIAL PAYMENTS
A. GENERAL
B. ESTIMATE
C. DEDUCTION FROM ESTIMATE
D. QUALIFICATIONS FOR PARTIAL PAYMENT FOR MATERIALS DELIVERED
E. PAYMENT
70. CLAIMS FOR EXTRA WORK
71. RELEASE OF LIENS OR CLAIMS
72. FINAL PAYMENT
73. NO WAIVER OF RIGHTS
74. ACCEPTANCE OF FINAL PAYMENT CONSTITUTES RELEASE

DEFINITIONS

Whenever in the Contract Documents the following terms are used, the intent and meaning shall be interpreted as follows:

1. AS APPROVED

The words "as approved", unless otherwise qualified, shall be understood to be followed by the words "by the ENGINEER for conformance with the Contract Document".

2. AS SHOWN, AND AS INDICATED

The words "as shown" and "as Indicated" shall be understood to be followed by the words "on the Drawings".

3. BIDDER

The person or persons, partnership, firm, or corporation submitting a Bid for the work contemplated.

4. CONTRACT DOCUMENTS

The "Contract Documents" consist of the Bidding Requirements, Contract Forms, Conditions of the Contact, Specifications, Drawings, all modifications thereof incorporated into the Documents before their execution, Change Orders, and all other requirements incorporated by specific reference thereto. These form the Contract.

5. CONTRACTOR

The person or persons, partnership, firm, or corporation who enters into the Contract awarded him by the OWNER.

6. CONTRACT COMPLETION

The "Contract Completion" is the date the OWNER accepts the entire work as being in compliance with the Contract Documents, or formally waives nonconforming work to extent of nonconformity, and issues the final payment in accordance with the requirements set forth in Article, "Final Payment" of these General Conditions.

7. DAYS

Unless otherwise specifically stated, the term "days" will be understood to mean calendar days. Business day or working day means any day other than Saturday, Sunday, or legal holiday.

8. DRAWINGS

The term "Drawings" refers to the official Drawings, Profiles, cross sections, elevations, details, and other working drawings and supplementary drawings, or reproductions thereof, signed by the ENGINEER, which shows the location, character, dimensions, and details of the work to be performed. Drawings may either be bound in the same book as the balance of the Contract Documents, or bound in separate sets, and are a part of the Contract Documents, regardless of the method of binding.

9. ENGINEER

The person or organization identified as such in the Contract Documents. The Term "ENGINEER" means ENGINEER or his authorized representative.

10. NOTICE

The term "notice" or the requirement to notify, as used in the Contract Documents or applicable state or federal statutes, shall signify a written communication delivered in person or by registered mail to the individual, or to a member of the firm, or to an officer of the corporation for whom it is intended. Certified or registered mail shall be addressed to the last business address known to him

who gives the notice.

11. OR EQUAL

The term "or equal" shall be understood to indicate that the "equal" Product is equivalent to or better than the Product named in function, performance, reliability, quality, and general configuration. Determination of equality in reference to the Project design requirements will be made by the ENGINEER. Such equal Products shall not be purchased or installed by the CONTRACTOR without written authorization.

12. OWNER

The person, organization, or public body identified as such in the Contract Documents.

13. PLANS (See Drawings)

14. SPECIFICATIONS

The term "Specifications" refers to those portions of the Contract Documents consisting of written technical descriptions of materials, equipment, construction systems, standards, and workmanship as applied to the work and certain administrative details applicable thereto. Where standard specifications, such as those of ASTM, AASHTO, etc., have been referred to, the applicable portions of such standard specifications shall become a part of these Contract Documents. If referenced specifications conflict with specifications contained herein, the requirements contained herein shall prevail.

15. NOTICE TO PROCEED

A written notice given by the OWNER to the CONTRACTOR (with a copy to the ENGINEER) fixing the date on which the Contract time will commence to run and on which the CONTRACTOR shall start to perform his obligation under the Contract Documents. The Notice to Proceed will be given within 30 days following the execution of the Contract by the OWNER.

16. SUBSTANTIAL COMPLETION

"Substantial Completion" shall be that degree of completion of the Project or a defined portion of the Project, as evidenced by the ENGINEER's written notice of Substantial Completion, sufficient to Provide the OWNER, at his discretion, the full-time use of the Project or defined portion of the Project for the purposes for which it was intended. "Substantial Completion" of an operating facility shall be that degree of completion that has Provided a minimum of 7 continuous days of successful, trouble-free, operation, which period shall begin after all performance and acceptance testing has been successfully demonstrated to the ENGINEER. All equipment contained in the work, plus all other components necessary to enable the OWNER to operate the facility in a manner that was intended, shall be complete on the substantial completion date.

17. WORK

The word "work" within these Contract Documents shall include all material, labor, tools, and all appliances, machinery, transportation, and appurtenances necessary to perform and complete the Contract, and such additional items not specifically indicated or described which can be reasonably inferred as belonging to the item described or indicated and as required by good Practice to Provide a complete and satisfactory system or structure. As used herein, "Provide" shall be understood to mean "furnish and install, complete in-place ".

<u>CONTRACT DOCUMENTS</u>

18. INTENT OF CONTRACT DOCUMENTS

The Contract Documents are complementary, and what is called for by one shall be as binding as if called for by all. The intent of the Documents is to describe a functionally complete Project (or part thereof) to be constructed in accordance with the Contract Documents. Any work, materials, or equipment that may reasonably be inferred from the Contract Documents as being required to produce the intended result shall be supplied whether or not specifically called for. When words which have a well-known technical

or trade meaning are used to describe work, materials, or equipment, such words shall be interpreted in accordance with that meaning.

Reference to standard specifications, manuals, or codes of any technical society, organization or association, or to the laws or regulations of any governmental authority, whether such reference be specific or by implication, shall mean the latest standard specification, manual, code or laws or regulations in effect on the first published date of the Invitation to Bid, except as may be otherwise specifically stated. However, no Provision of any referenced standard specification, manual or code (whether or not specifically incorporated by reference in the Contract Documents) shall be effective to change the duties and responsibilities of OWNER, CONTRACTOR, or ENGINEER, or any of their consultants, agents, or employees from those set forth in the Contract Documents, nor shall it be effective to assign to ENGINEER, or any ENGINEER's consultants, agents, or employees, any duty or authority to supervise or direct the furnishing or performance of the work or any duty or authority to undertake responsibility contrary to the Provisions of Article LIMITATIONS ON ENGINEER'S RESPONSIBILITIES.

19. DISCREPANCIES AND OMISSIONS

Any discrepancies or omissions found in the Contract Documents shall be reported to the ENGINEER immediately. The ENGINEER will clarify discrepancies or omissions, in writing, within a reasonable time.

In resolving inconsistencies among two or more sections of the Contract Documents, Precedence shall be given in the following order:

A. CONTRACT
B. BID
C. SUPPLEMENTARY CONDITIONS
D. INVITATION TO BID
E. INSTRUCTIONS TO BIDDERS
F. GENERAL CONDITIONS
G. SPECIFICATIONS
H. DRAWINGS

Addenda shall take Precedence over all sections referenced therein. Figure dimensions on Drawings shall take precedence over scale dimensions. Detailed Drawings shall take precedence over general Drawings.

20. CHANGES IN THE WORK

The OWNER, without notice to the Sureties and without invalidating the Contract, may order changes in the work within the general scope of the Contract by altering, adding to, or deducting from the work, the Contract being adjusted accordingly. All such work shall be executed under the conditions of the original Contract, except as specifically adjusted at the time of ordering such change.

In giving instructions, the ENGINEER may order minor changes in the work not involving extra cost and not inconsistent with the purposes of the Project, but otherwise, except in an emergency endangering life and Property, additions or deductions from the work shall be performed only in pursuance of an approved Change Order from the OWNER, countersigned by the ENGINEER.

If the work is reduced by alterations, such action shall not constitute a claim for damages based on loss of anticipated Profits.

21. EXAMINATION AND VERIFICATION OF CONTRACT DOCUMENTS

The CONTRACTOR shall thoroughly examine and become familiar with all of the various parts of these Contract Documents and determine the nature and location of the work, the general and local conditions, and all other matters, which can in any way affect the work under this Contract. Failure to make an examination necessary for this determination shall not release the CONTRACTOR from the obligations of this Contract. No verbal agreement or conversation with any officer, agent, or employee of the OWNER or with the ENGINEER either before or after the execution of this Contract shall affect or modify any of the terms or obligations herein contained.

22. DOCUMENTS TO BE KEPT ON THE JOBSITE

The CONTRACTOR shall keep one copy of the Contract Documents on the job- site, in good order, available to the ENGINEER

and to his representatives.

The CONTRACTOR shall maintain on a daily basis at the jobsite, and make available to the ENGINEER on request, one current record set of the Drawings which have been accurately marked to indicate all modifications in the completed work that differ from the design information shown on the Drawings. Upon Substantial completion of the work, the CONTRACTOR shall give the ENGINEER one complete set of these marked up record Drawings.

23. ADDITIONAL CONTRACT DOCUMENTS

Copies of Contract Documents or Drawings may be obtained on request from the ENGINEER and by paying the actual cost of reproducing the Contract Documents or Drawings.

24. OWNERSHIP OF CONTRACT DOCUMENTS

All portions of the Contract Documents, and copies thereof furnished by the ENGINEER are instruments of service for this Project. They are not to be used on other work and are to be returned to the ENGINEER on request at the completion of the work. Any reuse of these materials without specific written verification or adaptation by the ENGINEER will be at the risk of the user and without liability or legal expense to the ENGINEER. Such user shall hold the ENGINEER harmless from any and all damages, including reasonable attorneys' fees, from any and all claims arising from any such reuse. Any such verification and adaptation shall entitle the ENGINEER to further compensation at rates to be agreed upon by the user and the ENGINEER.

THE ENGINEER

25. AUTHORITY OF THE ENGINEER

The ENGINEER will be the OWNER's representative during the construction period. His authority and responsibility will be limited to the Provisions set forth in these Contract Documents. The ENGINEER will have the Authority to reject work that does not conform to the Contract Documents. However, neither the ENGINEER's authority to act under this Provision, nor any decision made by him in good faith either to exercise or not to exercise such authority, shall give rise to any duty or responsibility of the ENGINEER to the CONTRACTOR, any SUBCONTRACTOR, their respective Sureties, any of their agents or employees, or any other person performing any of the work.

26. DUTIES AND RESPONSIBILITIES OF THE ENGINEER

The ENGINEER will make visits to the site at intervals appropriate to the various stages of construction to observe the Progress and quality of the work and to determine, in general, if the work is proceeding in accordance with the intent of the Contract Documents. He will not make comprehensive or continuous review or observation to check quality or quantity of the work, and he will not be responsible for construction means, methods, techniques, sequences, or Procedures, or for safety Precautions and Programs in connection with the work. Visits and observations made by the ENGINEER shall not relieve the CONTRACTOR of his obligation to conduct comprehensive inspections of the work and to furnish materials and perform acceptable work, and to provide adequate safety Precautions, in conformance with the intent of the Contract.

The ENGINEER will make recommendations to the OWNER, in writing, on all claims of the OWNER or the CONTRACTOR arising from interpretation or execution of the Contract Documents. Such recommendations will be of factual and/or technical nature, and will not include the legal interpretation of the Contract Documents. Any necessary legal interpretation of the Contract Document will be made by the OWNER. Such recommendation shall be necessary before the CONTRACTOR can receive additional money under the terms of the Contract. Changes in work ordered by the ENGINEER shall be made in compliance with Article CHANGES IN THE WORK.
One or more Project representatives may be assigned to observe the work. It is understood that such Project representatives shall have the authority to issue notice of nonconformance and make decisions within the limitations of the authority of the ENGINEER. The CONTRACTOR shall furnish all reasonable assistance required by the ENGINEER or Project representatives for Proper observation of the work. The above-mentioned Project representatives shall not relieve the CONTRACTOR of his obligations to conduct comprehensive inspections of the work and to furnish materials and perform acceptable work, and to provide adequate safety Precautions, in conformance with the intent of the Contract.

27. LIMITATIONS ON ENGINEER'S RESPONSIBILITIES

ENGINEER will not be responsible for CONTRACTOR's means, methods, techniques, sequences, or Procedures of construction, or the safety Precautions and Programs incident thereto, and ENGINEER will not be responsible for CONTRACTOR's failure to perform or furnish the work in accordance with the Contract Documents.

ENGINEER will not be responsible for the acts or omissions of CONTRACTOR or of any SUBCONTRACTOR, any supplier, or of any other person or organization performing or furnishing any of the work.

Whenever in the Contract Documents the terms "as ordered", "as directed", "as required", "as allowed", "as approved", or terms of like effect or import are used, or the adjectives "reasonable", "suitable", "acceptable", "Proper", or "satisfactory", or adjectives of like effect or import are used to describe a requirement, direction, review or judgment of ENGINEER as to the work, it is intended that such requirement, direction, review or judgment will be solely to evaluate the work for compliance with the Contract Documents (unless there is a specific statement indicating otherwise). The use of any such term or adjective shall not be effective to assign to ENGINEER any duty or authority to supervise or direct the furnishing or performance of the work or any duty or authority to undertake responsibility contrary to the Provisions of this Article.

28. REJECTED WORK

Any defective work or nonconforming materials or equipment that may be discovered at any time prior to expiration of the warranty period shall be removed and replaced by work which shall conform to the Provisions of the Contract Documents. Any material condemned or rejected shall be removed at once from the Project site.

Failure on the part of the ENGINEER to condemn or reject bad or inferior work or to note nonconforming materials or equipment on CONTRACTOR submittals shall not be construed to imply acceptance of such work. The OWNER shall reserve and retain all of its rights and remedies at law against the CONTRACTOR and its Surety for correction of any and all latent defects discovered after the guarantee period.

29. LINES AND GRADES

Lines and grades shall be established as provided in the supplementary conditions. All stakes, marks, and other reference information shall be carefully preserved by the CONTRACTOR, and in case of their careless or unnecessary destruction or removal by him or his employees, such stakes, marks, and other information shall be replaced at the CONTRACTOR's expense.

30. SUBMITTALS

After checking and verifying all field measurements and after complying with applicable Procedures specified in Division I, GENERAL REQUIREMENTS, CONTRACTOR shall submit to ENGINEER, in accordance with the schedule for submittals for review, shop drawings, electrical diagrams, and catalog cuts for fabricated items and manufactured items (including mechanical and electrical equipment), which shall bear a stamp or specific written indication that CONTRACTOR has satisfied CONTRACTOR's responsibilities under the Contract Documents with respect to the review of the submittal. All submittals shall be identified as ENGINEER may require. The data shown shall be complete with respect to quantities, dimensions specified, performance and design criteria, materials, and similar data to enable ENGINEER to review the information. CONTRACTOR shall also submit to ENGINEER for review, with such promptness as to cause no delay in work, all samples required by the Contract Documents. All samples shall have been checked by and accompanied by a specific written indication that CONTRACTOR has satisfied CONTRACTOR's responsibilities under the Contract Documents with respect to the review of the submission and shall be identified clearly as to material, supplier, pertinent data such as catalog numbers and the use for which intended.

Before submission of each submittal, CONTRACTOR shall have determined and verified all quantities, dimensions, specified performance criteria, installation requirements, materials, catalog numbers, and similar data with respect thereto and reviewed or coordinated each submittal with other submittals and with the requirements of the work and the Contract Documents.

At the time of each submission, CONTRACTOR shall give ENGINEER specific written notice of each variation that the submittal may have from the requirements of the Contract Documents, and, in addition, shall cause a specific notation to be made on each shop drawing submitted to ENGINEER for review and approval of each variation.

ENGINEER will review submittals with reasonable Promptness, but ENGINEER's review will be only for conformance with the design concept of the Project and for compliance with the information given in the Contract Documents and shall not extend to means, methods, techniques, sequences, or Procedures of construction (except where a specific means, method, technique, sequence, or Procedure of construction is indicated in or required by the Contract Documents) or to safety Precautions or Programs incident thereto. The review of a separate item as such will not indicate review of the assembly in which the item functions. CONTRACTOR shall make corrections required by ENGINEER, and shall return the required number of corrected copies of shop drawings and submit as required new samples for review. CONTRACTOR shall direct specific attention in writing to revisions other than the corrections called for by ENGINEER on Previous submittals.

ENGINEER's review of submittals shall not relieve CONTRACTOR from the responsibility for any variation from the requirements of the Contract Documents unless CONTRACTOR has in writing called ENGINEER's attention to each such variation at the time of submission and ENGINEER has given written approval of each such variation by a specific written notation thereof incorporated therein or accompanying the shop drawing or sample approval; nor will any approval by ENGINEER relieve CONTRACTOR from responsibility for errors or omissions in the shop drawings or from responsibility for having complied with the Provisions herein. Where a shop drawing or sample is required by the specifications, any related work performed prior to ENGINEER's review and approval of the pertinent submission shall be at the sole expense and responsibility of the CONTRACTOR.

31. DETAIL DRAWINGS AND INSTRUCTIONS

The ENGINEER will furnish, with reasonable Promptness, additional instructions by means of Drawings or otherwise, if, in the ENGINEER's opinion, such are required for the Proper execution of the work. All such Drawings and instructions will be consistent with the Contract Documents, true developments thereof, and reasonably inferable there from.

<u>THE CONTRACTOR AND HIS EMPLOYEES</u>

32. CONTRACTOR, AN INDEPENDENT AGENT

The CONTRACTOR shall independently perform all work under this Contract and shall not be considered as an agent of the OWNER or of the ENGINEER, nor shall the CONTRACTOR's SUBCONTRACTORS or employees be subagents of the OWNER or of the ENGINEER.

32. (a.) ASSIGNMENT OF CONTRACT

Assignment of any part or the whole of this Contract shall be subject to review and approval of the City Commission.

33. SUBCONTRACTING

Unless modified in the Supplementary Conditions, within 10 days after the execution of the Contract, the CONTRACTOR shall submit to the ENGINEER the names of all SUBCONTRACTORS Proposed for the work, including the names of any SUBCONTRACTORS that were submitted with the Bid. The CONTRACTOR shall not employ any SUBCONTRACTORS to which the OWNER may object to as lacking capability to properly perform work of the type and scope anticipated.

The CONTRACTOR is as fully responsible to the OWNER for the acts and omissions of his SUBCONTRACTORS and of persons either directly or indirectly employed by them as he is for the acts and omissions of persons directly employed by him.

Nothing contained in the Contract Documents shall create any contractual relationship between any SUBCONTRACTOR and the OWNER or ENGINEER.

34. INSURANCE AND LIABILITY

A. GENERAL

The CONTRACTOR shall provide (from insurance companies acceptable to the OWNER) the insurance coverage designated hereinafter and pay all costs before commencing work under this Contract. The CONTRACTOR shall furnish the OWNER with certificates of insurance specified herein showing the type, amount class of operations covered, effective dates, and date of expiration of policies, and containing substantially the following statement:

"The insurance covered by this certificate shall not be canceled or materially altered, except after 30 days' written notice has been received by the OWNER."

In case of the breach of any Provision of this Article, the OWNER, at his option, may take out and maintain, at the expense of the CONTRACTOR, such insurance as the OWNER may deem Proper and may deduct the cost of such insurance from any monies which may be due or become due the CONTRACTOR under this Contract.

B. CONTRACTOR AND SUBCONTRACTOR INSURANCE

The CONTRACTOR shall not commence work under this Contract until he has obtained all the insurance required hereunder and such insurance has been reviewed by the OWNER, nor shall the CONTRACTOR allow any SUBCONTRACTOR to commence work on his subcontract until insurance specified below has been obtained. Review of the insurance by the OWNER shall not relieve or decrease the liability of the CONTRACTOR hereunder.

C. COMPENSATION AND EMPLOYER'S LIABILITY INSURANCE

The CONTRACTOR shall maintain during the life of this Contract the statutory amount of Workmen's Compensation Insurance, in addition, Employer's Liability Insurance in an amount as specified in the Supplementary Conditions, for each occurrence, for all of his employees to be engaged in work on the Project under this Contract. In case any such work is subcontracted, the CONTRACTOR shall require the SUBCONTRACTOR to provide similar Workmen's Compensation and Employer's Liability Insurance for all of the SUBCONTRACTOR's employees to be engaged in such work.

D. GENERAL LIABILITY INSURANCE (INCLUDING AUTOMOBILE)

The CONTRACTOR shall maintain during the life of this Contract such general liability, completed operations and Products liability, and automobile liability insurance as will Provide coverage for claims for damages for personal injury, including accidental death, as well as for claims for Property damage, which may arise directly or indirectly from performance of the work under this Contract. The general liability policy shall include contractual liability assumed by the CONTRACTOR under Article **INDEMNITY.** Coverage for Property damage shall be on a "broad form" basis with no exclusions for "X, C & U". The amount of insurance to be provided shall be as specified in the Supplementary Conditions.

In the event any work under this Contract is performed by a SUBCONTRACTOR, the CONTRACTOR shall be responsible for any liability directly or indirectly arising out of the work performed by the SUBCONTRACTOR; to the extent such liability is not covered by the SUBCONTRACTOR's insurance.

The OWNER and ENGINEER, their officers, agents, and employees shall be named as Additional Insured's on the CONTRACTOR's and any SUBCONTRACTOR's general liability and automobile liability insurance policies for any claims arising out of work performed under this Contract.

E. BUILDERS RISK ALL RISK INSURANCE

Unless otherwise modified in the Supplementary Conditions, the CONTRACTOR shall secure and maintain during the life of this Contract, Builders Risk All Risk Insurance coverage in an amount equal to the full value of the facilities under construction. Such insurance shall include coverage for earthquake, landslide, flood, collapse, loss due to the results of faulty workmanship or design, and all other normally covered risks, and shall provide for losses to be paid to the CONTRACTOR, OWNER, and ENGINEER as their interests may appear.

The OWNER and ENGINEER, their officers, agents, and employees shall be named as additional insured's on the CONTRACTOR's and any SUBCONTRACTOR's Builders Risk All Risk insurance policies for any claims arising out of work performed under this Contract.

This insurance shall include a waiver of subrogation as to the ENGINEER, the OWNER, the CONTRACTOR, and their respective officers, agents, employees and SUBCONTRACTORS.

F. NO PERSONAL LIABILITY OF PUBLIC OFFICIALS

In carrying out any of the Provisions hereof in exercising any authority granted by the Contract, there will be no personal liability upon any public official.

35. INDEMNITY

To the maximum extent permitted by law, the CONTRACTOR shall indemnify and defend the OWNER and the ENGINEER, and their officers, employees, agents, and sub-consultants, from all claims and losses, including attorney's fees and litigation costs arising out of Property losses or health, safety, personal injury, or death claims by the CONTRACTOR, its SUBCONTRACTORS of any tier, and their employees, agents, or invitees regardless of the

fault, breach of Contract, or negligence of the OWNER or ENGINEER, excepting only such claims or losses that have been adjudicated to have been caused solely by the negligence of the OWNER or the ENGINEER and regardless of whether or not the CONTRACTOR is or can be named a party in a litigation.

36. EXCLUSION OF CONTRACTOR CLAIMS

In performing its obligations, the ENGINEER and its consultants may cause expense for the CONTRACTOR or its SUBCONTRACTORS and equipment or material suppliers. However, those parties and their sureties shall maintain no direct action against the ENGINEER, its officers, employees, agents, and consultants for any claim arising out of, in connection with, or resulting from the ENGINEERing services performed or required to be performed.

37. TAXES AND CHARGES

The CONTRACTOR shall withhold and pay any and all sales and use taxes and all withholding taxes, whether State or Federal, and pay all Social Security charges and also all State Unemployment Compensation charges, and pay or cause to be withheld, as the case may be, any and all taxes, charges, or fees or sums whatsoever, which are now or may hereafter be required to be paid or withheld under any laws.

38. REQUIREMENTS OF STATE LAW FOR PUBLIC WORKS PROJECTS

When the Contract Documents concern public works of the state or any county, municipality, or political subdivision created by its laws, the applicable statutes shall apply. All parties to this Contract shall determine the contents of all applicable statutes and comply with their Provisions throughout the performance of the Contract.

39. CODES, ORDINANCES, PERMITS AND LICENSES

The CONTRACTOR shall keep himself fully informed of all local codes and ordinances, as well as state and federal laws, which in any manner affect the work herein specified. The CONTRACTOR shall at all times comply with said codes and ordinances, laws, and regulations, and Protect and indemnify the OWNER, the ENGINEER and their respective employees, and its officers and agents against any claim or liability arising from or based on the violation of any such laws, ordinances, or regulations. All permits, licenses and inspection fees necessary for Prosecution and completion of the work shall be secured and paid for by the CONTRACTOR, unless otherwise specified.

40. SUPERINTENDENCE

The CONTRACTOR shall keep at the project site, competent supervisory personnel. The CONTRACTOR shall designate, in writing, before starting work, a Project superintendent who shall be an employee of the CONTRACTOR and shall have complete authority to represent and to act for the CONTRACTOR. ENGINEER shall be notified in writing prior to any change in superintendent assignment. The CONTRACTOR shall give efficient supervision to the work, using his best skill and attention. The CONTRACTOR shall be solely responsible for all construction means, methods, techniques, and Procedures, and for providing adequate safety Precautions and coordinating all portions of the work under the Contract. It is specifically understood and agreed that the ENGINEER, its employees and agents, shall not have control or charge of and shall not be responsible for the construction means, methods, techniques, Procedures, or for providing adequate safety Precautions in connection with the work under Contract.

41. RECEPTION OF ENGINEER'S COMMUNICATIONS

The superintendent shall receive for the CONTRACTOR all communications from the ENGINEER. Communications of major importance will be confirmed in writing upon request from the CONTRACTOR.

The ENGINEER may schedule Project meetings for the purposes of discussing and resolving matters concerning the various elements of the work. Time and place for these meetings and the names of persons required to be Present shall be as determined by the ENGINEER. CONTRACTOR shall comply with these attendance requirements and shall also require his SUBCONTRACTORS to comply.

42. SAFETY

The CONTRACTOR shall be solely and completely responsible for conditions of the jobsite, including safety of all persons (including employees) and Property during performance of the work. This requirement shall apply continuously and not be limited to normal working hours. Safety Provisions shall conform to U.S. Department of Labor (OSHA), and all other applicable federal, state, county, and local laws, ordinances, codes, and regulations. Where any of these are in conflict, the more stringent requirement shall be followed. The CONTRACTOR's failure to thoroughly familiarize himself with the aforementioned safety Provisions shall not relieve him from compliance with the obligations and penalties set forth therein.

The CONTRACTOR shall develop and maintain for the duration of this Contract, a safety Program that will effectively incorporate and implement all required safety Provisions. The CONTRACTOR shall appoint an employee who is qualified and authorized to supervise and enforce compliance with the safety Program. The duty of the ENGINEER to conduct construction review of the work does not include review or approval of the adequacy of the CONTRACTOR's safety Program, safety supervisor, or any safety measures taken in, on, or near the construction site. The CONTRACTOR, as a part of his safety Program, shall maintain at his office or other well-known place at the jobsite, safety equipment applicable to the work as Prescribed by the aforementioned authorities, all articles necessary for giving first-aid to the injured, and shall establish the Procedure for the immediate removal to a hospital or a doctor's care of persons (including employees) who may be injured on the jobsite.

If death or serious injuries or serious damages are caused, the accident shall be reported immediately by telephone or messenger to both the ENGINEER and the OWNER. In addition, the CONTRACTOR must promptly report in writing to the ENGINEER all accidents whatsoever arising out of, or in connection with, the performance of the work whether on, or adjacent to, the site, giving full details and statements of witnesses.

If a claim is made by anyone against the CONTRACTOR or any SUBCONTRACTOR on account of any accident, the CONTRACTOR shall promptly report the facts in writing to the ENGINEER, giving full details of the claim.

43. PROTECTION OF WORK AND PROPERTY

The CONTRACTOR shall at all times safely guard and Protect from damage the OWNER's Property, adjacent Property, and his own work from injury or loss in connection with this Contract. All facilities required for Protection by federal, state, or municipal laws and regulations and local conditions must be provided and maintained.
The CONTRACTOR shall Protect his work and materials from damage due to the nature of the work, the elements, carelessness of other CONTRACTORs, or from any cause whatever until the completion and acceptance of the work. All loss or damages arising out of the nature of the work to be done under these Contract Documents, or from any unforeseen obstruction or defects which may be encountered in the Prosecution of the work, or from the action of the elements, shall be sustained by the CONTRACTOR.

44. RESPONSIBILITY OF CONTRACTOR TO ACT IN AN EMERGENCY

In case of an emergency which threatens loss or injury of Property, and/or safety of life, the CONTRACTOR shall act, without previous instructions from the OWNER or ENGINEER, as the situation may warrant. The CONTRACTOR shall notify the ENGINEER thereof immediately thereafter. Any claim for compensation by the CONTRACTOR, together with substantiating documents in regard to expense, shall be submitted to the OWNER through the ENGINEER and the amount of compensation shall be determined by agreement.

45. MATERIALS AND APPLIANCES

Unless otherwise stipulated, the CONTRACTOR shall Provide and pay for all materials, labor, water, tools, equipment, heat, light, fuel, power, transportation, construction equipment and machinery, appliances, telephone, sanitary facilities, temporary facilities and other facilities and incidentals necessary for the execution and completion of the work.

Unless otherwise specified, all materials shall be new, and both workmanship and materials shall be of good quality. The CONTRACTOR shall, if required, furnish satisfactory evidence as to the kind and quality of materials.

In selecting and/or approving equipment for installation in the Project, the OWNER and ENGINEER assume no responsibility for injury or claims resulting from failure of the equipment to comply with applicable federal, state, and local safety codes or requirements, or the safety requirements of a recognized agency, or failure due to faulty design concepts, or defective workmanship and materials.

46. CONTRACTORS' AND MANUFACTURERS' COMPLIANCE WITH STATE SAFETY, OSHA, AND OTHER CODE REQUIREMENTS

The completed work shall include all necessary permanent safety devices, such as machinery guards and similar ordinary safety items required by the state and federal (OSHA) industrial authorities and applicable local and national codes. Further, any features of the work subject to such safety regulations shall be fabricated, furnished, and installed (including OWNER-furnished equipment) in compliance with these requirements. CONTRACTORs and manufacturers of equipment shall be held responsible for compliance with the requirements included herein. CONTRACTORs shall notify all equipment suppliers and SUBCONTRACTORS of the Provisions of this Article.

47. SUBSTITUTION OF MATERIALS

Except for OWNER-selected equipment items, and items where no substitution is clearly specified, whenever any material, article, device, Product, fixture, form, type of construction, or Process is indicated or specified by patent or Proprietary name, by name of manufacturer, or by catalog number, such specifications shall be deemed to be used for the purpose of establishing a standard of quality and facilitating the description of the material or Process desired. This Procedure is not to be construed as eliminating from competition other Products of equal or better quality by other manufacturers where fully suitable in design, and shall be deemed to be followed by the words "or equal". The CONTRACTOR may, in such cases, submit complete data to the ENGINEER for consideration of another material, type, or Process that shall be substantially equal in every respect to that so indicated or specified. Substitute materials shall not be used unless approved in writing. The ENGINEER will be the sole judge of the substituted article or material.

48. TESTS, SAMPLES, AND OBSERVATIONS

The CONTRACTOR shall furnish, without extra charge, the necessary test pieces and samples, including facilities and labor for obtaining the same, as requested by the ENGINEER. When required, the CONTRACTOR shall furnish certificates of tests of materials and equipment made at the point of manufacture by a recognized testing laboratory.

The OWNER, ENGINEER, and authorized government agents, and their representatives shall at all times be Provided safe access to the work wherever it is in Preparation or Progress, and the CONTRACTOR shall Provide facilities for such access and for observations, including maintenance of temporary and permanent access.

If the Specifications, laws, ordinances, or any public authority require any work, to be specially tested or approved, the CONTRACTOR shall give timely notice of its readiness for observations. If any work should be covered up without approval or consent of the ENGINEER, it shall, if required by the ENGINEER, be uncovered for examination at the CONTRACTOR's expense. Reexamination of questioned work may be ordered by the ENGINEER, and, if so ordered, the work shall be uncovered by the CONTRACTOR. If such work is found to be in accordance with the Contract Documents, the OWNER will pay the cost of uncovering, exposure, observation, inspection, testing and reconstruction. If such work is found to be not in accordance with the Contract Documents, the CONTRACTOR shall correct the defective work, and the cost of reexamination and correction of the defective work shall be paid by the CONTRACTOR.

49. ROYALTIES AND PATENTS

The CONTRACTOR shall pay all royalty and licenses fees, unless otherwise specified. The CONTRACTOR shall defend all suits or claims for infringement of any patent rights and shall save the OWNER and the ENGINEER harmless from any and all loss, including reasonable attorneys' fees, on account thereof.

50. CONTRACTOR'S RIGHT TO TERMINATE CONTRACT

If the work should be stopped under an order of any court or other public authority for a period of more than 3 months, through no act or fault of the CONTRACTOR, its SUBCONTRACTORS, or respective employees or if the ENGINEER should fail to make recommendation for payment to the OWNER or return payment request to CONTRACTOR for revision within 30 days after it is due, or if the OWNER should fail to pay the CONTRACTOR within 30 days after time specified in Article PARTIAL PAYMENTS, any sum recommended by the ENGINEER, then the CONTRACTOR may, upon 15 days' written notice to the OWNER and the ENGINEER, stop work or terminate this Contract and recover from the OWNER payment for all acceptable work performed and reasonable termination expenses, unless said default has been remedied.

51. CORRECTION OF DEFECTIVE WORK DURING WARRANTY PERIOD

The CONTRACTOR hereby agrees to make, at his own expense, all repairs or replacements necessitated by defects in materials or workmanship, Provided under terms of this Contract, and pay for any damage to other works resulting from such defects, which become evident within 2 years after the date of final acceptance of the work or within 2 years after the date of substantial completion established by the ENGINEER for specified items of equipment, or within such longer period as may be Prescribed by law or by the terms of any applicable special guarantee required by the Contract Documents. Un-remedied defects identified for correction during the warranty period but remaining after its expiration shall be considered as part of the obligations of the warranty. Defects in material, workmanship, or equipment which are remedied as a result of obligations of the warranty shall subject the remedied portion of the work to an extended warranty period of 2 years after the defect has been remedied.

The CONTRACTOR further assumes responsibility for a similar guarantee for all work and materials provided by SUBCONTRACTORS or manufacturers of packaged equipment components. The effective date for the start of the guarantee or warranty period for equipment qualifying as substantially complete is defined in Article SUBSTANTIAL COMPLETION, AND Article SUBSTANTIAL COMPLETION DATE, in these General Conditions.

The CONTRACTOR also agrees to hold the OWNER and the ENGINEER harmless from liability of any kind arising from damage due to said defects. The CONTRACTOR shall make all repairs and replacements promptly upon receipt of written order for same from the OWNER. If the CONTRACTOR fails to make the repairs and replacements promptly, or in an emergency where delay would cause serious risk, or loss, or damage, the OWNER may have the defective work corrected or the rejected work removed and replaced, and the CONTRACTOR and his Surety shall be liable for the cost thereof.

PROGRESS OF THE WORK

52. BEGINNING OF THE WORK

Following execution of the Contract, the CONTRACTOR shall meet with the OWNER and ENGINEER relative to his arrangements for prosecuting the work.

53. SCHEDULES AND PROGRESS REPORTS

Prior to starting the construction, the CONTRACTOR shall Prepare and submit to the ENGINEER, a Progress schedule showing the dates on which each part or division of the work is expected to be started and finished, and a Preliminary schedule for submittals. The Progress schedule for submittals shall be brought up to date and submitted to the ENGINEER at the end of each month or at such other times the ENGINEER may request.

The CONTRACTOR shall forward to the ENGINEER, at the end of each month, an itemized report of the delivery status of major and critical items of purchased equipment and material, including shop drawings and the status of shop and field fabricated work. These Progress reports shall indicate the date of the purchase order, the current percentage of completion, estimated delivery, and

cause of delay, if any.

If the completion of any part of the work or the delivery of materials is behind the submitted Progress schedule, the CONTRACTOR shall submit in writing a plan acceptable to the OWNER and ENGINEER for bringing the work up to schedule.

The OWNER shall have the right to withhold Progress payments for the work if the CONTRACTOR fails to update and submit the Progress schedule and reports as specified.

54. PROSECUTION OF THE WORK

It is expressly understood and agreed that the time of beginning, rate of Progress, and time of completion of the work are the essence of this Contract. The work shall be prosecuted at such time, and in or on such part or parts of the Project as may be required, to complete the Project as contemplated in the Contract Documents and the Progress schedule.

If the CONTRACTOR desires to carry on work at night or outside the regular hours, he shall give timely notice to the ENGINEER to allow satisfactory arrangements to be made for observing the work in Progress.

55. OWNER'S RIGHT TO RETAIN IMPERFECT WORK

If any part or portion of the work completed under this Contract shall Prove defective and not in accordance with the Drawings and Specifications, and if the imperfection in the same shall not be of sufficient magnitude or importance as to make the work dangerous or unsuitable, or if the removal of such work will create conditions which are dangerous or undesirable, the OWNER shall have the right and authority to retain such work but will make such deductions in the final payment therefore as may be just and reasonable.

56. OWNER'S RIGHT TO DO WORK

Should the CONTRACTOR neglect to Prosecute the work in conformance with the Contract Documents or neglect or refuse at his own cost to remove and replace work rejected by the ENGINEER, then the OWNER may notify the Surety of the condition, and after 10 days' written notice to the CONTRACTOR and the Surety, or without notice if an emergency or danger to the work or public exists, and without Prejudice to any other right which the OWNER may have under Contract, or otherwise, take over that portion of the work which has been improperly or non-timely executed, and make good the deficiencies and deduct the cost thereof from the payments then or thereafter due the CONTRACTOR.

57. OWNER'S RIGHT TO TRANSFER EMPLOYMENT

If the CONTRACTOR should abandon the work or if he should persistently or repeatedly refuse or should fail to make prompt payment to SUBCONTRACTORS for material or labor, or to persistently disregard laws, ordinances, or to prosecute the work in conformance with the Contract Documents, or otherwise be guilty of a substantial violation of any Provision of the Contract or any laws or ordinance, then the OWNER may, without Prejudice to any other right or remedy, and after giving the CONTRACTOR and Surety 10 days' written notice, transfer the employment for said work from the CONTRACTOR to the Surety. Upon receipt of such notice, such Surety shall enter upon the Premises and take possession of all materials, tools, and appliances thereon for the purpose of completing the work included under this contract and employ by Contract or otherwise, any qualified person or persons to finish the work and Provide the materials therefore, in accordance with the Contract Documents, without termination of the continuing full force and effect of this contract. In case of such transfer of employment to such Surety, the Surety shall be paid in its own name on estimates according to the terms hereof without any right of the CONTRACTOR to make any claim for the same or any part thereof.

If, after the furnishing of said written notice to the Surety, the CONTRACTOR and the Surety still fail to make reasonable Progress on the performance of the work, the OWNER may terminate the employment of the CONTRACTOR and take possession of the Premises and of all materials, tools, and appliances thereon and finish the work by whatever method he may deem expedient and charge the cost thereof to the CONTRACTOR and the Surety. In such case, the CONTRACTOR shall not be entitled to receive any further payment until the work is finished. If the expense of completing the Contract, including compensation for additional managerial and administrative services, shall exceed such unpaid balance, the CONTRACTOR and the Surety shall pay the difference to the OWNER.

58. DELAYS AND EXTENSION OF TIME

If the CONTRACTOR is delayed in the Progress of the work by any act or neglect of the OWNER or the ENGINEER, or by any separate CONTRACTOR employed by the OWNER, or by strikes, lockouts, fire, adverse weather conditions not reasonably anticipated, or acts of Nature, and if the CONTRACTOR, within 48 hours of the start of the occurrence, gives written notice to the OWNER of the cause of the potential delay and estimate of the possible time extension involved, and within 10 days after the cause of the delay has been remedied, the CONTRACTOR gives written notice to the OWNER of any actual time extension requested as a result of the aforementioned occurrence, then the Contract time may be extended by change order for such reasonable time as the ENGINEER determines. It is agreed that no claim shall be made or allowed for any damages, loss, or expense which may arise out of any delay caused by the above referenced acts or occurrences other than claims for the appropriate extension of time. No extension of time will be granted to the CONTRACTOR for delays occurring to parts of the work that have no measurable impact on the completion of the total work under this Contract. No extension of time will be considered for weather conditions reasonably anticipated for the area in which the work is being performed. Reasonably anticipated weather conditions will be based on official records of monthly Precipitation and other historical data. Adverse weather conditions, if determined to be of a severity that would impact Progress of the work, may be considered as cause for an extension of Contract completion time.

Delays in delivery of equipment or material purchased by the CONTRACTOR or his SUBCONTRACTORS, including OWNER-selected equipment shall not be considered as a just cause for delay, unless the OWNER determines that for good cause the delay is beyond the control of the CONTRACTOR. The CONTRACTOR shall be fully responsible for the timely ordering, scheduling, complete the work is the per-diem rate, as stipulated in the Bid. The said amount is hereby agreed upon as a reasonable estimate of the costs, which may be accrued by the OWNER after the expiration of the time of completion. It is expressly under- stood and agreed that this amount is not to be considered in the nature of a penalty, but as liquidated damages which have accrued against the CONTRACTOR. The OWNER shall have the right to deduct such damages from any amount due, or that may become due the CONTRACTOR, or the amount of such damages shall be due and collectible from the CONTRACTOR or Surety.

59. DIFFERING SITE CONDITIONS

The CONTRACTOR shall promptly, and before the conditions are disturbed, give a written notice to the OWNER and ENGINEER of:

A. subsurface or latent physical conditions at the site which differ materially from those indicated in this contract,
B. unknown physical conditions at the site, of an unusual nature, which differ materially from those ordinarily encountered and generally recognized as inherent in work of the character provided for in the Contract.

The ENGINEER will investigate the site conditions promptly after receiving the notice. If the conditions do materially so differ and cause an increase or decrease in the CONTRACTOR's cost of, or the time required for, performing any part of the work under this Contract, whether or not changed as a result of the conditions, and equitable adjustment shall be made under this Article and the Contract modified in writing accordingly.

No request by the CONTRACTOR for an equitable adjustment to the Contract under this Article will be allowed, unless the CONTRACTOR has given the written notice required; Provided that the time prescribed above for giving written notice may be extended by the OWNER.

No request by the CONTRACTOR for an equitable adjustment to the Contract for differing site conditions will be allowed if made after final payment under this Contract.

60. LIQUIDATED DAMAGES

Should the CONTRACTOR fail to complete the work, or any part thereof, in the time agreed upon in the Contract or within such extra time as may have been allowed for delays by extensions granted as Provided in the Contract, the CONTRACTOR shall reimburse the OWNER for the additional expense and damage for each calendar day, Sundays and legal holidays included, that the Contract remains uncompleted after the Contract completion date. It is agreed that the amount of such additional expense and damage incurred by reason of failure to complete the work is the per-diem rate, as stipulated in the Bid. The said amount is hereby agreed upon as a reasonable estimate of the costs which may be accrued by the OWNER after the expiration of the time of completion. It is expressly under- stood and agreed that this amount is not to be considered in the nature of a penalty, but as liquidated damages which have accrued against the CONTRACTOR. The OWNER shall have the right to deduct such damages

from any amount due, or that may become due the CONTRACTOR, or the amount of such damages shall be due and collectible from the CONTRACTOR or Surety.

61. OTHER CONTRACTS

The OWNER reserves the right to let other Contracts in connection with the work. The CONTRACTOR shall afford other CONTRACTORs reasonable opportunity for the introduction and storage of their materials and the execution of their work and shall properly connect and coordinate his work with theirs.
If any part of the work under this Contract depends for Proper execution or results upon the work of any other CONTRACTOR, utility service company or OWNER, the CONTRACTOR shall inspect and Promptly report to the ENGINEER in writing any patent or apparent defects to deficiencies in such work that render it unsuitable for such Proper execution and results. The CONTRACTOR's failure to so report shall constitute and acceptance of the work by others as being fit and Proper for integration with work under this Contract, except for latent or non-apparent defects and deficiencies in the work.

62. USE OF PREMISES

The CONTRACTOR shall confine his equipment, the storage of materials and the operation of his workers to limits shown on the Drawings or indicated by law, ordinances, permits, or directions of the ENGINEER, and shall not unreasonably encumber the Premises with his materials. The CONTRACTOR shall provide, at his own expense, the necessary rights-of-way and access to the work, which may be required outside the limits of the OWNER's Property and shall furnish the ENGINEER copies of permits and agreements for use of the Property outside that provided by the OWNER.

The CONTRACTOR shall not load nor permit any part of the structure to be loaded in any manner that will endanger the structure, nor shall CONTRACTOR subject any part of the work or adjacent Property to stresses or Pressures that will endanger it.

63. SUBSTANTIAL COMPLETION DATE

The ENGINEER may issue a written notice of substantial completion for the purpose of establishing the starting date for specific equipment guarantees, and to establish the date that the OWNER will assume the responsibility for the cost of operating such equipment. Said notice shall not be considered as final acceptance of any portion of the work or relieve the CONTRACTOR from completing the remaining work within the specified time and in full compliance with the Contract Documents. See SUBSTANTIAL COMPLETION under DEFINITIONS of these General Conditions.

64. PERFORMANCE TESTING

Operating equipment and systems shall be performance tested in the Presence of the ENGINEER to demonstrate compliance with the specified requirements. Performance testing shall be conducted under the specified design operating conditions or under such simulated operating conditions as recommended or approved by the ENGINEER. Schedule such testing with the ENGINEER at least one week in advance of the planned date for testing.

65. OWNER'S USE OF PORTIONS OF THE WORK

Following issuance of the written notice of Substantial Completion, the OWNER may initiate operation of the facility. Such use shall not be considered as final acceptance of any portion of the work, nor shall such use be considered as cause for an extension of the Contract completion time, unless authorized by a Change Order issued by the OWNER.

66. CUTTING AND PATCHING

The CONTRACTOR shall do all cutting, fitting, or patching of his work that may be required to make its several parts come together Properly and fit it to receive or be received by work of other CONTRACTORs shown upon or reasonably implied by the Drawings.

67. CLEANING UP

The CONTRACTOR shall, at all times, keep Property on which work is in Progress and the adjacent Property free from accumulations of waste material or rubbish caused by employees or by the work. Upon completion of the construction, the

CONTRACTOR shall remove all temporary structures, rubbish, and waste materials resulting from his operations.

PAYMENT

68. PAYMENT FOR CHANGE ORDERS

The OWNER's request for quotations on alterations to the work shall not be considered authorization to proceed with the work expediting, delivery, and installation of all equipment and materials. Within a reasonable period after the CONTRACTOR submits to the OWNER a written request for an extension of time, the ENGINEER will Present his written opinion to the OWNER as to whether an extension of time is justified, and, if so, his recommendation as to the number of days for time extension. The OWNER will make the final decision on all requests for extension of time.

Prior to the issuance of a formal Change Order, nor shall such request justify any delay in existing work. Quotations for alterations to the work shall include substantiating documentation with an itemized breakdown of CONTRACTOR and SUBCONTRACTOR costs, including labor, material, rentals, approved services, overhead, and profit. OWNER may require detailed cost data in order to substantiate the reasonableness of the proposed costs.

Any compensation paid in conjunction with the terms of a Change Order shall comprise total compensation due the CONTRACTOR for the work or alteration defined in the Change Order. By signing the Change Order, the CONTRACTOR acknowledges that the stipulated compensation includes payment for the work or alteration plus all payment for the interruption of schedules, extended overhead, delay, or any other impact claim or ripple effect, and by such signing specifically waives any reservation or claim for additional compensation in respect to the subject Change Order.

At the OWNER's option, payment or credit for any alterations covered by a Change Order shall be determined by one or a combination of the methods set forth in A, B, or C below, as applicable:

A. UNIT PRICES

Those unit Prices stipulated in the Bid shall be utilized where they are applicable. In the event the Change Order results in a change in the original quantity that is materially and significantly different from the original bid quantity, a new unit Price shall be negotiated upon demand of either party. Unit Prices for new items included in the Change Order shall be negotiated and mutually agreed upon.

B. LUMP SUM

A total lump sum for the work negotiated and mutually acceptable to the CONTRACTOR and the OWNER. Lump sum quotations for modifications to the work shall include substantiating documentation with an itemized breakdown of CONTRACTOR and SUBCONTRACTOR costs, including labor, material, rentals, approved services, overhead, and Profit, all calculated as specified under "C" below.

C. COST REIMBURSEMENT WORK

The term "cost reimbursement" shall be understood to mean that payment for the work will be made on a time and expense basis, that is, on an accounting of the CONTRACTOR's forces, materials, equipment, and other items of cost as required and used to do the work.

If the method of payment cannot be agreed upon Prior to the beginning of the work, and the OWNER directs by written Change Order that the work be done on a cost reimbursement basis, then the CONTRACTOR shall furnish labor, and furnish and install equipment and materials necessary to complete the work in a satisfactory manner and within a reasonable period of time. For the work performed, payment will be made for the documented actual cost of the following:

1. Labor including foremen for those hours they are assigned and participating in the cost reimbursement work (actual payroll cost, including wages, fringe benefits as established by negotiated labor agreements, labor insurance, and labor taxes as established by law). No other fixed labor burdens will be considered, unless approved in writing by the OWNER.
2. Material delivered and used on the designated work, including sales tax, if paid by the CONTRACTOR or his SUBCONTRACTOR.
3. Rental or equivalent rental cost of equipment, including necessary transportation for items having a value in excess of

$100. Rental or equivalent rental cost will be allowed for only those days or hours during which the equipment is in actual use. Rental and transportation allowances shall not exceed the current rental rates prevailing in the locality. The rentals allowed for equipment will, in all cases, be understood to cover all fuel, supplies, repairs, and renewals, and no further allowances will be made for those items, unless specific agreement to that effect is made.

4. Additional bond, as required and approved by the OWNER.
5. Additional insurance (other than labor insurance) as required and approved by the OWNER.

In addition to items 1 through 5 above, an added fixed fee for general overhead and Profit shall be negotiated and allowed for the CONTRACTOR (or approved SUBCONTRACTOR) actually executing the Cost Reimbursement work.

An additional fixed fee shall be negotiated and allowed the CONTRACTOR for the administrative handling of portions of the work that are executed by an approved SUBCONTRACTOR. No additional fixed fee will be allowed for the administrative handling of work executed by a SUBCONTRACTOR of a SUBCONTRACTOR, unless by written permission from the OWNER.

The added fixed fees shall be considered to be full compensation, covering the cost of general supervision, overhead, Profit, and any other general expense. The CONTRACTOR's records shall make clear distinction between the direct costs of work paid for on a cost reimbursement basis and the costs of other work. The CONTRACTOR shall furnish the ENGINEER report sheets in duplicate of each day's cost reimbursement work no later than the working day following the performance of said work. The daily report sheets shall itemize the materials used, and shall cover the direct cost of labor and the charges for equipment rental, whether furnished by the CONTRACTOR, SUBCONTRACTOR or other forces. The daily report sheets shall provide names or identifications and classifications of workers, the hourly rate of pay and hours worked, and also the size, type, and identification number of equipment and hours operated.
Material charges shall be substantiated by valid copies of vendors' invoices. Such invoices shall be submitted with the daily report sheets, or, if not available, they shall be submitted with subsequent daily report sheets. Said daily report sheets shall be signed by the CONTRACTOR or his authorized agent.

The OWNER reserves the right to furnish such materials and equipment as he deems expedient and the CONTRACTOR shall have no claim for profit or added fees on the cost of such materials and equipment. To receive partial payments and final payment for cost reimbursement work, the CONTRACTOR shall submit to the ENGINEER, detailed and complete documented verification of the CONTRACTOR's and any of his SUBCONTRACTORS' actual costs involved in the cost reimbursement work. Such costs shall be submitted within 30 days after said work has been performed.

69. PARTIAL PAYMENTS

A. GENERAL

Nothing in this Article shall be construed to affect the right, hereby reserved, to reject the whole or any part of the aforesaid work, should such work be later found not to comply with the Provisions of the Contract Documents. All estimated quantities of work for which partial payments have been made are subject to review and correction on the final estimate. Payment by the OWNER and acceptance by the CONTRACTOR of partial payments based on periodic estimates of quantities of work performed shall not, in any way, constitute acceptance of the estimated quantities used as a basis for computing the amounts of the partial payments.

B. ESTIMATE

At least 30 days before each Progress payment falls due, as specified in the Supplementary Conditions, the CONTRACTOR shall submit to the ENGINEER a detailed estimate of the amount earned during the Preceding month for the separate portions of the work, and request payment. As used in this Article, the words "amount earned" means the value, on the date of the estimate for partial payment, of the work completed in accordance with the Contract Documents, and the value of approved materials delivered to the Project site suitable stored and Protected Prior to incorporation into the work.

ENGINEER will, within 7 days after receipt of each request for payment, either indicate in writing a recommendation of payment and present the request to OWNER, or return the request to CONTRACTOR indicating in writing ENGINEER's reasons for refusing to recommend payment. In the latter case, CONTRACTOR may, within 7 days, make the necessary corrections and resubmit the request.

ENGINEER may refuse to recommend the whole or any part of any payment if, in his opinion, it would be incorrect to make such representations to OWNER. ENGINEER may also refuse to recommend any such payment, or, because of subsequently discovered evidence or the results of subsequent inspections or tests, nullify any such payment previously recommended to such an extent as may be necessary in ENGINEER's opinion to protect the OWNER from loss because:

1. The work is defective, or completed work has been damaged requiring correction or replacement;

2. Written claims have been made against OWNER or Liens have been filed in connection with the work;
3. The Contract Price has been reduced because of Change Orders;

4. OWNER has been required to correct defective work or complete the work in accordance with Article OWNER'S RIGHT TO DO WORK;

5. Of CONTRACTOR's unsatisfactory Prosecution of the work in accordance with the Contract Documents; or

6. CONTRACTOR's failure to make payment to SUBCONTRACTORS or for labor, materials, or equipment.

C. DEDUCTION FROM ESTIMATE

Unless modified in the Supplementary Conditions, deductions from the estimate will be as described below:

1. The OWNER will deduct from the estimate, and retain as part security, 10 percent of the amount earned for work satisfactorily completed. A deduction and retainage of 10 percent will be made on the estimated amount earned for approved items of material delivered to and properly stored at the jobsite but not incorporated into the work. When the work is 50 percent complete, the OWNER may reduce the retainage to 5 percent of the dollar value of all work satisfactorily completed to date provided the CONTRACTOR is making satisfactory progress and there is no specific cause for a greater retainage. The OWNER may reinstate the retainage up to 10 percent if the OWNER determines, at his discretion, that the CONTRACTOR is not making satisfactory progress or where there is other specific cause for such withholding.

D. QUALIFICATION FOR PARTIAL PAYMENT FOR MATERIALS DELIVERED

Unless modified in the Supplementary Conditions, qualification for partial payment for materials delivered but not yet incorporated into the work shall be as described below:

1. Materials, as used herein, shall be considered to be those items which are fabricated and manufactured material and equipment. No consideration shall be given to individual purchases of less than $200 for any one item.

2. To receive partial payment for materials delivered to the site, but not incorporated in the work, it shall be necessary for the CONTRACTOR to include a list of such materials on the Partial Payment Request. At his sole discretion, the ENGINEER may approve items for which partial payment is to be made. Partial payment shall be based on the CONTRACTOR's actual cost for the materials as evidenced by invoices from the supplier. Proper storage and Protection shall be provided by the CONTRACTOR, and as approved by the ENGINEER. Final payment shall be made only for materials actually incorporated in the work and, upon acceptance of the work, all materials remaining for which advance payments had been made shall revert to the CONTRACTOR, unless otherwise agreed, and partial payments made for these items shall be deducted from the final payment for the work.

3. CONTRACTOR warrants and guarantees that title to all work, materials, and equipment covered by any Application for Payment, whether incorporated in the Project or not, will pass to OWNER at the time of payment free and clear of all liens, claims, security interests, and encumbrances.
4. If requested by the ENGINEER, the CONTRACTOR shall provide, with subsequent pay requests, invoices receipted by the supplier showing payment in full has been made.

E. PAYMENT

After deducting the retainage and the amount of all previous partial payments made to the CONTRACTOR from the amount earned, the amount due will be made payable to the CONTRACTOR. Recommendations for payment received by the OWNER less than 9

days Prior to the scheduled day for payment will not be Processed or paid until the following month.

70. CLAIMS FOR EXTRA WORK

In any case where the CONTRACTOR deems additional time or compensation will become due him under this Contract for circumstances other than those defined in Article DELAYS AND EXTENSION OF TIME, the CONTRACTOR shall notify the ENGINEER, in writing, of his intention to make claim for such time or compensation before he begins the work on which he bases the claim, in order that such matters may be settled, if possible, or other appropriate action taken. The notice of claim shall be in duplicate, in writing, and shall state the circumstances and the reasons for the claim, but need not state the amount. If such notification is not given or if the ENGINEER is not afforded proper facilities by the CONTRACTOR for keeping strict account of actual cost, then the CONTRACTOR hereby agrees to waive the claim for such additional time or compensation. Such notice by the CONTRACTOR, and fact that the ENGINEER has kept account of the cost as aforesaid, shall not in any way be construed as proving the validity of the claim.

No extension of time will be granted to the CONTRACTOR for delays resulting from extra work that have no measurable impact on the completion of the total work under this Contract. Claims for additional time or compensation shall be made in itemized detail and submitted, in writing, to the OWNER and ENGINEER within 10 days following completion of that portion of the work for which the CONTRACTOR bases his claim. Failure to make the claim for additional compensation in the manner and within the time specified above shall constitute waiver of that claim. In case the claim is found to be just, it shall be allowed and paid for as provided in Article PAYMENT FOR CHANGE ORDERS.

71. RELEASE OF LIENS OR CLAIMS

The CONTRACTOR shall indemnify and hold harmless the OWNER from all claims for labor and materials furnished under this Contract. Prior to the final payment, the CONTRACTOR shall furnish to the OWNER, as part of his final payment request, a certification that all of the CONTRACTOR's obligations on the project have been satisfied and that all monetary claims and indebtedness have been paid. The CONTRACTOR shall furnish complete and legal effective releases or waivers, satisfactory to the OWNER, of all liens arising out of or filed in connection with the work.

72. FINAL PAYMENT

Upon completion of all the work under this Contract, the CONTRACTOR shall notify the ENGINEER, in writing, that he has completed his part of the Contract and shall request final payment. Upon receipt of such notice the ENGINEER will inspect and, if acceptable, submit to the OWNER his recommendation as to acceptance of the completed work and as to the final estimate of the amount due the CONTRACTOR. Upon approval of this final estimate by the OWNER and compliance by the CONTRACTOR with Provisions in Article **RELEASE OF LIENS OR CLAIMS,** and other Provisions as may be applicable, the OWNER shall pay to the CONTRACTOR all monies due him under the Provisions of these Contract Documents.

73. NO WAIVER OF RIGHTS

Neither the inspection by the OWNER, through the ENGINEER or any of his employees, nor any order by the OWNER for payment of money, nor any payment for, or acceptance of, the whole or any part of the work by the OWNER or ENGINEER, nor any extension of time, nor any possession taken by the OWNER or its employees, shall operate as a waiver of any Provision of this Contract, or any power herein reserved to the OWNER, or any right to damages herein Provided, nor shall any waiver of any breach in this Contract be held to be a waiver of any other or subsequent breach. Acceptance or final payment shall not be final and conclusive with regards to latent defects, fraud, or such gross mistakes as may amount to fraud, or as regards the OWNER's rights under the warranty.

74. ACCEPTANCE OF FINAL PAYMENT CONSTITUTES RELEASE

The acceptance by the CONTRACTOR of the final payment shall release the OWNER and the ENGINEER, as representatives of the OWNER, from all claims and all liability to the CONTRACTOR for all things done or furnished in connection with the work, and every act of the OWNER and others relating to or arising out of the work except claims Previously made in writing and still unsettled. No payment, however, final or otherwise, shall operate to release the CONTRACTOR or his Sureties from obligations under this Contract and the Performance Bond, Payment Bond, and other bonds and warranties, as herein provided.

SUPPLEMENTARY CONDITIONS

The General Conditions are hereby revised as follows:

ARTICLE 9 "ENGINEER"

Delete Article "ENGINEER" in its entirety and substitute the following:

The person or organization identified as such in the Contract Documents. The Term "ENGINEER" means "OWNER" or his authorized representative.

ARTICLE 34 "INSURANCE & LIABILITY"

Delete Articles 34A, 34B, 34C, and 34D and substitute the following:

Contractor shall maintain limits no less than those stated below:

CONTRACTOR is to secure, pay for, and file with the City of Key West, prior to commencing any work under the Contract, all certificates for workers' compensation, public liability, and property damage liability insurance, and such other insurance coverages as may be required by specifications and addenda thereto, in at least the following minimum amounts with specification amounts to prevail if greater than minimum amounts indicated. Notwithstanding any other provision of the Contract, the CONTRACTOR shall provide the minimum limits of liability insurance coverage as follows:

Auto Liability	$1,000,000	Combined Single Limit
General Liability	$2,000,000	Aggregate (Per Project)
	$2,000,000	Products Aggregate
	$1,000,000	Any One Occurrence
	$1,000,000	Personal Injury
	$ 300,000	Fire Damage/Legal
Additional Umbrella Liability	$2,000,000	Occurrence / Aggregate

CONTRACTOR shall furnish an original Certificate of Insurance indicating, and such policy providing coverage to, City of Key West named as an additional insured on a PRIMARY and NON CONTRIBUTORY basis utilizing an ISO standard endorsement at least as broad as CG 2010 (11/85) or its equivalent, (combination of CG 20 10 07 04 and CG 20 37 07 04, providing coverage for completed operations, is acceptable) including a waiver of subrogation clause in favor of City of Key West on all policies. CONTRACTOR will maintain the General Liability and Umbrella Liability insurance coverages summarized above with coverage continuing in full force including the additional insured endorsement until at least 3 years beyond completion and delivery of the work contracted herein.

Notwithstanding any other provision of the Contract, the CONTRACTOR shall maintain complete workers' compensation coverage for each and every employee, principal, officer, representative, or agent of the CONTRACTOR who is performing any labor, services, or

material under the Contract. Further, CONTRACTOR shall additionally maintain the following minimum limits of coverage:

Bodily Injury Each Accident	$1,000,000
Bodily Injury by Disease Each Employee	$1,000,000
Bodily Injury by Disease Policy Limit	$1,000,000

If the work is being done on or near a navigable waterway, CONTRACTOR's workers compensation policy shall be endorsed to provide USL&H Act (WC 00 01 06 A) and Jones Act (WC 00 02 01 A) coverage if specified by the City of Key West. CONTRACTOR shall provide the City of Key West with a Certificate of Insurance verifying compliance with the workman's compensation coverage as set forth herein and shall provide as often as required by the City of Key West such certification which shall also show the insurance company, policy number, effective and expiration date, and the limits of workman's compensation coverage under each policy.

CONTRACTOR's insurance policies shall be endorsed to give 30 days' written notice to the City of Key West in the event of cancellation or material change, using form CG 02 24, or its equivalent.

Certificates of Insurance submitted to the City of Key West will not be accepted without copies of the endorsements being requested. This includes additional insured endorsements, cancellation/material change notice endorsements, and waivers of subrogation. Copies of USL&H Act and Jones Act endorsements will also be required if necessary. PLEASE ADVISE YOUR INSURANCE AGENT ACCORDINGLY.

CONTRACTOR will comply with any and all safety regulations required by any agency or regulatory body including but not limited to OSHA. CONTRACTOR will notify City of Key West immediately by telephone at (305) 809-3963 any accident or injury to anyone that occurs on the jobsite and is related to any of the work being performed by the CONTRACTOR.

Add the following Article:

G. SURETY AND INSURER QUALIFICATIONS

All bonds, insurance contracts, and certificates of insurance shall be either executed by or countersigned by a licensed resident agent of the Surety or insurance company, having his place of business in the State of Florida, and in all ways complying with the insurance laws of the State of Florida. Further, the said Surety or Insurance Company shall be duly licensed and qualified to do business in the State of Florida. If requested, Contractor shall Provide Proof of Florida Licensure for all insurance companies. The City of Key West shall be named as Additional Insured on the insurance certificates.

See sample insurance forms on next seven (7) pages

ARTICLE 35 “INDEMNITY”

Delete Article “INDEMNITY” in its entirety and substitute the following:

INDEMNITY

To the fullest extent permitted by law, the CONTRACTOR expressly agrees to indemnify and hold harmless the City of Key West, their officers, directors, agents, and employees (herein called the “indemnitees”) from liabilities, damages, losses and costs, including, but not limited to, reasonable attorney’s fees and court costs, such legal expenses to include costs incurred in establishing the indemnification and other rights agreed to in this Paragraph, to persons or property, to the extent caused by the negligence, recklessness, or intentional wrongful misconduct of the CONTRACTOR, its Subcontractors or persons employed or utilized by them in the performance of the Contract. Claims by indemnitees for indemnification shall be limited to the amount of CONTRACTOR’s insurance or $1 million per occurrence, whichever is greater. The parties acknowledge that the amount of the indemnity required hereunder bears a reasonable commercial relationship to the Contract and it is part of the project specifications or the bid documents, if any. The indemnification obligations under the Contract shall not be restricted in any way by any limitation on the amount or type of damages, compensation, or benefits payable by or for the CONTRACTOR under workers’ compensation acts, disability benefits acts, or other employee benefits acts, and shall extend to and include any actions brought by or in the name of any employee of the CONTRACTOR or of any third party to whom CONTRACTOR may subcontract a part or all of the Work. This indemnification shall continue beyond the date of completion of the work.

ARTICLE 39 "CODES, ORDINANCES, PERMITS, AND LICENSES"

Add the following:

A. NOISE ORDINANCE

City of Key West has a noise ordinance that allows working hours between 8:00 AM to 7:00 PM, Monday through Friday. No work should be performed during weekends or City Holidays, State Holidays and National Holidays. Any construction operations outside these hours and these days will require a variance from the City of Key West Commission.

B. "LICENSES"

THE BIDDER MUST BE A LICENSED CONTRACTOR BY THE STATE OF FLORIDA AND SUBMIT PROOF OF SUCH WITH THE BID.

1. Within 10 days of Notice of Award, the successful Bidder must represent that he holds all applicable, county, and City of Key West licenses and permits required to do business as a contractor with respect to the work described in the Contract Documents.

2. Further, the successful Bidder must, within 10 days of Notice of Award, furnish documentation showing that, as a minimum, he has complied with the provisions of Chapter 18 of the Code of Ordinances of the City of Key West in order to enter into the Agreement contained in the Contract Documents.

3. Specifically, within 10 days after Notice of Award, the successful Bidder must demonstrate that he holds, as a minimum, the following licenses and certificates:

   a.) City of Key West Tax License Receipt;
   b.) A valid Certificate of Competency issued by the Chief Building Official of Key West, Florida
   c.) A valid occupational license issued by the City of Key West, Florida.

C. WORK DURING HOLIDAYS

There shall be no work during City, State & National holidays without prior approval from the City of Key West.

ARTICLE 40 “SUPERINTENDENCE”

Add the following sub article:

The CONTRACTOR shall keep at the project site, competent supervisory personnel, able to read, write and speak English to effectively communicate with City staff.

ARTICLE 42 "SAFETY"

Add the following sub article:

OCCUPATIONAL SAFETY AND HEALTH

The Contractor shall observe and comply with all applicable local, state, and federal occupational safety and health regulations during the prosecution of work under this Contract. In addition, full compliance by the Contractor with the U.S. Department of Labor's Occupational Safety and Health Standards, as established in Public Law 91-596, will be required under the terms of this Contract.

ARTICLE 43 "PROTECTION OF WORK AND PROPERTY"

Add the following Article:

HISTORIC PRESERVATION

The Contractor shall comply with Florida's Archives and Historic Act (Florida Statutes, Chapter 267) and the regulations of the local historic preservation board as applicable and protect

against the potential loss or destruction of significant historical or archaeological data, sites, and properties in connection with the project.

ARTICLE 57 “OWNERS RIGHT TO TRANSFER EMPLOYMENT”

Add the following Article:

TERMINATION FOR CONVENIENCE AND RIGHT OF SUSPENSION

A. Owner shall have the right to terminate this Contract without cause by written notice of Termination to the Contractor. In the event of such termination for convenience, the Contractor’s recovery against the Owner shall be limited to that portion of the Contract amount earned through the date of termination, together with any retainage withheld and reasonable termination expenses incurred. Contractor shall not be entitled to any other or further recovery against the Owner, including, but not limited to, damages or any anticipated profit on portions of the Work not performed.

B. The Owner shall have the right to suspend all or any portions of the Work upon giving the Contractor prior written notice of such suspension. If all or any portion of the Work is so suspended, the Contractor shall be entitled to reasonable costs, expenses and time extension associated with the suspension.

ARTICLE 60 "LIQUIDATED DAMAGES"

Delete Article "LIQUIDATED DAMAGES" in its entirety and substitute the following:
LIQUIDATED DAMAGES

Should the Contractor fail to complete the work or any part thereof in the time agreed upon in the Contract Documents or within such extra time as may have been allowed for delays by extensions granted as provided in the Contract, the Contractor shall reimburse the Owner for the additional expense and damage for each calendar day, Sundays and legal holidays included, that project outlined in Contract Documents remains uncompleted after the completion date. Liquidated damages shall be assessed. It is agreed that the amount of such additional expense and damage incurred by reason of failure to complete the work is the per diem rate as stipulated in the Bid. The said amount is hereby agreed upon as a reasonable estimate of the costs which may be accrued by the Owner after the expiration of the time of completion. It is expressly understood and agreed that this amount is not to be considered in the nature of a penalty but as liquidated damages, which have accrued against the Contractor. The Owner shall have the right to deduct such damages from any amount due or that may become due the Contractor or the amount of such damages shall be due and collectible from the Contractor.

ARTICLE 68 “PAYMENT”

Sub article C. “COST REIMBURSEMENT WORK”

Delete the third & fourth paragraph in its entirety & substitute the following;

In addition to 1 through 5 above , an added fixed fee of 15 percent (%) for general overhead & profit shall be allowed for the CONTRACTOR (or approved SUBCONTRACTOR) actually executing the Cost Reimbursement work.

An additional fixed fee of 5 % will be allowed the CONTRACTOR for the administrative handling of portions of the work that are executed by an approved SUBCONTRACTOR. No additional fixed fee will be allowed for the administrative handling of work executed by the SUBCONTRACTOR of a SUBCONTRACTOR.

ARTICLE 69 "PARTIAL PAYMENTS"

Delete the first paragraph of Sub article B. "ESTIMATE" and substitute the following:

No more than once each month the Contractor shall submit to the ENGINEER a detailed estimate of the amount earned during the preceding month for the separate portions of the work and request payment. As used in this Article the words "amount earned" means the value, on the date of the estimate, for partial payment of the work completed in accordance with the Contract Documents and the value of approved materials delivered to the project site suitably stored and protected prior to incorporation into the work. Payment will be made by the Owner to the Contractor within 40 days receipt of the written recommendation of payment from the ENGINEER.

Sub Article C. “DEDUCTION FROM ESTIMATE

Delete third sentence in its entirety and substitute add the following;

1. When the work is 90 per cent complete, the OWNER may reduce the retainage to 5 percent of the dollar value of all work satisfactorily completed to date provided the CONTRACTOR is making satisfactory progress and there is no specific cause for greater retainage.

Delete Sub article E. "PAYMENT" in its entirety and substitute the following:

After deducting the retainage and the amount of all previous partial payments made to the Contractor from the amount earned the amount due will be made payable to the Contractor. Recommendations for payment received by the Owner less than 40 days prior to the scheduled day for payment will not be processed or paid until the following month.

ARTICLE 72 "FINAL PAYMENT"
Delete Article "FINAL PAYMENT" in its entirety and substitute the following:

FINAL PAYMENT
Upon completion of the work the Contractor shall notify the ENGINEER, in writing, that he has completed it and shall request final payment. The Contractor shall be responsible for keeping an

accurate and detailed record of his actual construction. Upon completion of construction and before final acceptance and payment the Contractor shall furnish the ENGINEER as-built drawings of his construction. Upon receipt of a request for final payment and the as-built drawings the ENGINEER will inspect and, if acceptable, submit to the Owner his recommendation as to acceptance of the completed work and as to the final estimate of the amount due the Contractor. Upon approval of this final estimate by the Owner and compliance by the Contractor with provisions in Article RELEASE OF LIENS OR CLAIMS, and other provisions as may be applicable, the Owner shall pay to the Contractor all monies due him under the provisions of these Contract Documents.

ARTICLE 72 "FINAL PAYMENT"

Add the following;

A. Acceptance and Final Payment

Whenever the Contractor has completely performed the work provided for under the Contract and the ENGINEER has performed a final inspection and made final acceptance and subject to the terms of the ENGINEER will prepare a final estimate showing the value of the work as soon as the ENGINEER makes the necessary measurements and computations. The ENGINEER will correct all prior estimates and payments in the final estimate and payment. The OWNER will pay the estimate, less any sums that the OWNER may have deducted or retained under the provisions of the Contract, as soon as practicable after final acceptance of the work, provided the Contractor has met the requirements of (1) through (8) below.

1. The Contractor has agreed in writing to accept the balance due or refund the overpayment, as determined by the OWNER, as full settlement of his account under the Contract and of all claims in connection therewith, or the Contractor, accepted the balance due or refunded the overpayment, as determined by the OWNER, with the stipulation that his acceptance of such payment or the making of such refund does not constitute any bar, admission, or estoppel, or have any effect as to those payments in dispute or the subject of a pending claim between the Contractor and the OWNER. To receive payment based on a FINAL PAYMENT CERTIFCATE, The Contractor further agrees, by submitting a FINAL PAYMENT CERTIFICATE that any pending or future arbitration claim or suit is limited to those particulars, including the itemized amounts, defined in the original FINAL PAYMENT CERTIFICATE , and that he will commence with any such arbitration claim or suit within 15 calendar days from and after the time of final PAYMENT of the work and that his failure to file a formal claim within this period constitutes his full acceptance of the ENGINEER’s final estimate and payment. The overpayment refund check from the Contractor, if required, will be considered a part of any Acceptance Letter executed.

2. The Contractor has properly maintained the project, as specified hereinbefore.

3. The Contractor has furnished a sworn affidavit to the effect that the Contractor has paid all bills and no suits are pending (other than those exceptions listed, if any) in

connection with work performed under the Contract and that the Contractor has not offered or made any gift or gratuity to, or made any financial transaction of any nature with, any employee of the OWNER in the performance of the Contract.

4. Final payment will not be released until the City receives Certified As-built drawings in Auto Cad & Adobe format as well as:

As-Built Drawing Standards:

All supplied data collections, as-builts, drawings and files to be compatible with esri ArcGIS 10.2.2 Software. The current computing environment consists of:

- Microsoft SQL Server - Windows 7/Server 2008 - ESRI GIS Platform

Interfaces and Integrations:

The City of Key West uses a number of software applications critical to its core operation and mission. The proposed mobile asset data collection solution will need to interface or integrate with these existing platforms. - Arc Collector-ArcGIS Online - ArcMap 10.2

END OF SECTION

PART 4

GENERAL REQUIREMENTS

SECTION 01001
GENERAL REQUIREMENTS

PART 1 - GENERAL

1.1 PROJECT DESCRIPTION

A. A brief description of the work is stated in the Invitation to Bid. To determine the full scope of the project or of any particular part of the project, coordinate the applicable information in the several parts of these Contract Documents.

1.2 MOBILIZATION AND DEMOBILIZATION

A. Contractor shall be responsible for mobilization and demobilization of labor, materials and equipment. Payment for mobilization and demobilization will be included in the lump sum price indicated in the BID. Parking for vehicles used on site will be determined by the ENGINEER prior to mobilization.

B. DAILY REPORTS
   1) The CONTRACTOR shall submit daily reports of construction activities for each site, including non-work days. The report shall include:
      a) Manpower, number of workers by craft
      b) Quality Control
      c) Equipment on the Project
      d) Major deliveries
      e) Activities worked
      f) New problems
      g) Other pertinent information
   2) A similar report shall be submitted for/by each Subcontractor.
   3) The reports shall be submitted to the ENGINEER upon request.

1.3 SCHEDULING

A. Prior to starting the work, confer with the ENGINEER and Owner's representative to develop an approved work schedule. Which will permit the surrounding facilities to function as normally as practical. It may be necessary to do certain parts of the work outside normal working hours in order to avoid undesirable conditions. The Contractor shall do this work at such times and at no additional cost to the Owner.

B. SPECIAL EVENTS: Contractor may be asked to stop work during special events.

1.4 COORDINATION

A. Contractors shall cooperate in the coordination of their separate activities in a manner that will provide the least interference with the Owner's operations and other contractors and utility companies working in the area, and in the interfacing and connection of the separate elements of the overall project work.

B. If any difficulty or dispute should arise in the accomplishment of the above, the problem shall be brought immediately to the attention of the ENGINEER.

C. CONTRACTOR shall notify all residents and proprietors adjacent to construction site of work to be performed, more specifically the notice shall state the day and time construction will begin, the name and phone number of the Contractor's representative responsible for the completion of the proposed improvements. Notice shall also include the Owner's representative for the project.

1.5 SITE INVESTIGATION AND REPRESENTATION

A. The Contractor acknowledges satisfaction as to the nature and location of the work, the general and local conditions, particularly those bearing upon availability of transportation, access to the site, disposal, handling and storage of materials, availability of labor, water, electric power, roads, and uncertainties of weather, or similar physical conditions at the site, the conformation and conditions at the site, the character of equipment and facilities needed preliminary to and during the prosecution of the work, and all other matters which can any way affect the work or the cost thereof under this Contract.

B. The Contractor further acknowledges satisfaction as to character, quality, and quantity of surface and subsurface materials to be encountered from his inspection of the site and from reviewing any available records of exploratory work furnished by the Owner or included in these Documents. Failure by the Contractor to become acquainted with the physical conditions of the site and all available information will not relieve the Contractor from responsibility for properly estimating the difficulty or cost of successfully performing the work.

C. The Contractor warrants that as a result of examination and investigation of all the aforesaid data, the contractor can perform the work in a good and workmanlike manner and to the satisfaction of the Owner.

D. The Owner assumes no responsibility for any representations made by any of its officers or agents during or prior to the execution of this Contract, unless (1) such representations are expressly stated in the Contract, and (2) the Contract expressly provides that the responsibility therefore is assumed by the Owner.

1.6 INFORMATION ON SITE CONDITIONS

A. General: Any information obtained by the ENGINEER regarding site conditions, subsurface information, water level, existing construction of site facilities as applicable, and similar data will be available for inspection at the office of the ENGINEER upon request. Such information is offered as supplementary information only. Neither the ENGINEER nor the Owner assumes any responsibility for the completeness or interpretation of such supplementary information.

B. The Contractor shall provide a color audio-video recording showing the entire preconstruction site. All videos shall be taken by a professional commercial video photographer. The video photographer shall be an established enterprise that routinely provides these services. The videos shall be in DVD format or .wav files on removable USB drive, indicating the date, project name, and a brief description of the location where the video was taken. The Contractor shall submit one (1) copy of the preconstruction audio-video to the OWNER.

1.7 DIFFERING SUBSURFACE CONDITIONS

A. The ENGINEER shall investigate such conditions promptly and following this investigation, the Contractor shall proceed with the work, unless otherwise instructed by the ENGINEER. If the ENGINEER finds that such conditions do so materially differ and cause an increase or decrease in the cost of, or in the time required for performing the work, the ENGINEER will recommend to the Owner the amount of adjustment in cost and time he considers reasonable. The Owner will make the final decision on all Change Orders to the Contract regarding any adjustment in cost or time for completion.

1.8 UTILITIES

A. During excavation the Contractor shall be responsible for determining, at his cost, the locations of all known utilities in the project area.

B. Contractor shall notify utility location service (e.g. Call Sunshine 1-800-432-4770) a minimum for 48 hours prior to work order mobilization. Assigned notification number shall be maintained at the job site at all times and recorded in the daily reports.

1.9 CONTRACTOR'S RESPONSIBILITY FOR UTILITY PROPERTIES AND SERVICE

A. Where the Contractor's operations could cause damage or inconvenience to telephone, television, gas, water, sewer, or irrigation systems, the operations shall be suspended until all arrangements necessary for the protection of these utilities and services have been made by the Contractor.

B. Notify all utility offices, which are affected by the construction operation at least 48 hours in advance. Under no circumstances expose any utility without first obtaining permission from the appropriate agency. Once permission has been granted, locate, expose, and provide temporary support for all existing underground utilities.

C. The Contractor shall be solely and directly responsible to the Owner and operators of such properties for any damage, injury, expense, loss, inconvenience, delay, suits, actions, or claims of any character brought because of any injuries or damage which may result from the construction operations under this Contract

D. Neither the Owner nor its Officers or agents shall be responsible to the Contractor for damages as a result of the Contractor's failure to protect utilities encountered in the work.

E. In the event of interruption to domestic water, sewer, storm drain, or other utility services as a result of accidental breakage due to construction operations, promptly notify the proper authority. Cooperate with said authority in restoration of service as promptly as possible and bear all costs of repair. In no case shall interruption of any water or utility service be allowed to exist outside working hours unless prior approval is granted.

F. In the event the Contractor encounters water service lines that interfere with trenching, he may, by obtaining prior approval of the property owner, Florida Keys Aqueduct Authority

(FKAA), or Fire Department as applicable, and the ENGINEER, cut the service dig through, and restore service with similar and equal materials at the Contractor's expense.

G. The Contractor shall replace, at his own expense, all existing utilities or structures removed or damaged during construction, unless otherwise provided for in these Contract Documents or ordered by the ENGINEER.

1.10 TEMPORARY WATER

A. The Contractor shall make his own arrangements to obtain suitable water for any need and shall pay all costs.

1.11 TEMPORARY ELECTRIC POWER

A. The Contractor shall make his own arrangements to obtain and pay for electrical power used until final acceptance by the Owner.

1.12 SAFETY REQUIREMENTS FOR TEMPORARY ELECTRIC POWER

A. Temporary electric power installation shall meet the construction Safety requirements of OSHA, State, and other governing agencies.

1.13 SANITARY FACILITIES

A. The Contractor shall provide and maintain sanitary facilities for his employees and his subcontractor's employees that will comply with the regulations of the local and State Departments of Health and as directed by the Owner.

1.14 STORAGE OF MATERIALS

A. Materials shall be so stored as to ensure the preservation of their quality and fitness for the work. When considered necessary, they shall be placed on wooden platforms or other clean hard surfaces and not on the ground. Stored materials shall be located so as to facilitate prompt inspection. Stored materials on city property must safe and secured from the general public and if necessary they must be fitted with lights at night. Private property shall not be used for storage purposes without the written permission of the owner or lessee. Materials shall not be stored where access to any structure, plot, or road is blocked. Location of stored materials approved by the ENGINEER or his designee.

B. Delicate instruments and materials subject to vandalism shall be placed under lock cover and, if necessary, provided with temperature control as recommended by the manufacturer.

1.15 CONSTRUCTION SAFETY PROGRAM

A. The Contractor shall develop and maintain for the duration of this Contract, a safety program that will effectively incorporate and implement all required safety provisions. The Contractor shall appoint an employee who is qualified and authorized to supervise and enforce compliance with the safety program.

B. The duty of the ENGINEER to conduct construction review of the Contractor's performance is not intended to include a review or approval of the adequacy of the Contractor's safety

supervisor, the safety program or any safety measures taken in, on, or near the construction site.

C. The Contractor shall do all work necessary to protect the general public from hazards, including, but not limited to, surface irregularities, or unramped grade changes on pedestrian walkways and docks. Barricades, lights, and proper signs shall be furnished in sufficient amount to safeguard the public and the work.

D. The performance of all work shall be in accordance with the applicable governing safety authorities.

1.16 ACCIDENT REPORTS

A. If death or serious injuries or serious damages are caused; the Contractor must promptly report by telephone or messenger to the ENGINEER. In addition, the Contractor must promptly report in writing to the ENGINEER all accidents whatsoever arising out of or in connection with, the performance of the work whether on, or adjacent, to the site, giving full details and statements of witnesses.

B. If a claim is made against the Contractor or any subcontractor on account of any accident, the Contractor shall promptly report the facts in writing to the ENGINEER, giving full details of the claim.

1.17 FIRE PREVENTION AND PROTECTION

A. The Contractor shall perform all work in a fire-safe manner and shall supply and maintain on the site adequate fire-fighting equipment capable of extinguishing incipient fires. The Contractor shall comply with applicable federal, state, and local fire-prevention regulations. Where these regulations do not apply, applicable parts of the National Fire Prevention Standard for Safeguarding Building Construction Operations (NFPA No. 241) shall be followed.

1.18 SITE RESTORATION AND CLEANUP:

A. At all times during the work keep the premises clean and orderly and upon completion of daily work repair all damage caused by equipment and leave the project free of rubbish or excess materials of any kind.

B. Stockpile excavated materials in a manner that will cause the least damage to adjacent lawns, grassed areas, gardens, shrubbery, or fences regardless of whether these are on private property, or State, County, or City rights-of-way. Remove all excavated materials from grassed and planted areas, and leave these surfaces in a condition equivalent to their original condition.

1.19 FINISHING OF SITE AND STORAGE AREAS

A. Upon completion of the project, all areas used by the Contractor shall be properly cleared of all temporary structures, rubbish and waste materials and properly graded to drain and blend in with the abutting property. Areas used for the deposit of waste materials shall be finished to properly drain and blend in with the surrounding terrain.

1.20 AREA CLEANUP DURING CONSTRUCTION

A. Thoroughly clean all spilled dirt, gravel, sand or other foreign materials caused by the construction operations from all streets and roads, grass, pathways, docks or concrete walkways and from adjacent areas at the conclusion of each day's operation. Truck or equipment wash down is not to be performed on City Property.

1.21 PREVENTION

A. Applicable environmental regulations shall be strictly adhered to.

1.22 SUBMITTALS

A. See Submittals section of the specifications

1.23 PAYMENT

A. The cost of the work in this section is considered incidental to the contract.

END OF SECTION

SECTION 01010
SCOPE OF WORK

The project contemplated consists of providing all materials, equipment and labor necessary to accomplish the following at the Mallory Square Public Bathrooms.

1.1 DESCRIPTION

A. Work Included: The furnishing of all materials, equipment and labor for the replacement of bathroom fixtures ,doors dispensers, cleaning & painting detailed in the specifications and drawing for ITB # 003-16 and all necessary appurtenances, record drawings, and incidental work to provide a complete and serviceable project identified as:

B. **ITB # 003-16 - MALLORY SQUARE PUBLIC BATHROOM IMPROVEMENTS**

PERFORM ALL PLUMBING UPGRADES AS DEPICTED ON SHEETS A-1 thru P-2 OF "MALLORY SQUARE PUBLIC TOILET FACILITY", WILLIAM P. HORN ARCHITECT, P.A.

REMOVE AND RETURN TO CITY (existing):
All toilets
All urinals
All sinks
All electric hand dryers
Janitor's sink
All interior water and sewer piping and valves
All stall partitions
All interior doors
Exterior doors
Sixteen (16) existing window screens

FURNISH AND INSTALL (new):
Seven (7) toilets (auto-flush)
Three (3) urinals (auto-flush)
Eight (8) sinks (auto water)
Eight (8) metered faucets
Six (6) electric hand dryers
One (1) janitor's sink
All interior water and sewer piping and valves
All stall partitions
All interior doors
Exterior doors
One (1) new attic vent fan
Sixteen (16) window screens

Clean, patch, prime & repaint all walls (colors to be selected by owner)

Clean floor tiles and grout, re-grout (where necessary) and seal all floors.

Clean four (4) existing window vent fans

Provide and install new locking panel cover for existing electrical panel in ladies room

Provide and pay for temporary public toilets as described in scope of work (see Section 1.2 item A 3.below)

C. Related requirements in other parts of the Contract Documents: Include but not limited to:

1. General and Supplementary Conditions of the Contract for Construction.

1.2 CONTRACTOR'S DUTIES:

A. In addition to provisions stipulated in other portions of the Contract Documents, the Contractor shall:

1. Secure permits as necessary for proper execution and completion of the work.

2. Notify (in writing) all TENANTS and proprietors adjacent to construction site of work to be performed, more specifically the notice shall state the day and time construction will begin, hours of work, the name and phone number of the Contractor's Superintendent and an end date for the project.

3. Supply and pay for temporary bathroom facilities (Porta Johns) for Public use. There shall be two (2) ADA compliant portable toilets, three (3) WOMEN'S toilets, two (2) MEN'S toilets and two (2) portable urinals. In additional there shall be liquid hand sanitizer in each unit. The units shall be new or like new condition and shall be cleaned and emptied daily. Location to be determined by Owner.

B. The Contractor shall be totally responsible for all required permits and payment of associated fees. Contractor shall ensure that construction complies with all applicable local, state, and federal codes.

C. Provide an experienced, qualified, and competent Superintendent able to read, write and speak English to oversee the work and perform quality assurance inspections. Prior to starting construction, the proposed Superintendent's qualifications shall be submitted in writing to the City for approval. The approved Superintendent shall be expected to remain for the duration of the Project, unless the City or ENGINEER deem him/her inadequate and requests his/her removal or the Contractor cannot continue his services to the Project for a reason or reasons that shall be communicated in writing to the City.

D. A replacement Superintendent shall be required to follow the same approval process as required for the original. The Superintendent shall provide to the City, Construction Reports, for each day of construction, the reports shall be in English, legible, and signed. Contractor shall provide PDF copies monthly. Reports shall include quantity control checks done daily

E. It shall be the Contractor's responsibility to comply with the City's Ordinance

Chapter 26 Environment, Article IV. Sound Control below:

Sec. 26-193. - Exceptions.

The prohibitions contained in this article shall not apply to the following:

(3)

Construction/demolition. Sound levels produced from tools and equipment in commercial construction, demolition, drilling, or reasonably similar activities. However, such sound levels are limited to the hours of 8:00 a.m. to 7:00 p.m., Monday through Friday, and 9:00 a.m. to 5:00 p.m. on Saturday. The tools and equipment must be muffled and maintained equal to the functional standards of the industry. No exceptions contained in this subsection shall apply on Thanksgiving Day, Christmas Day and New Year's Day.

F. The Contractors is responsible for the removal, disposal and installation of all fixtures and all associated items used in the completion of the project. Contractor is responsible for all costs associated with the disposal and must dispose of materials in an environmentally responsible manner.

G. The Contractor shall provide material safety data sheets (2 copies) for chemicals, paints, coatings and materials used on-site prior to initiation of work.

1.3 CONTRACTOR'S USE OF PREMISES

A. Work shall be scheduled as to not interfere with on-going area activities.

B. Coordinate use of premises and requirements for security under direction of City.

C. Assume full responsibility for the protection and safekeeping of products, under this Contract, stored on the site.

D. Obtain and pay for the use of additional storage or work areas needed for operation.

1.4 MAINTENANCE OF EXISTING UTILITIES OPERATION

A. Provide at least three weeks' notice prior to interruption of utility services for temporary or permanent connections.

B. Keep interruption of utility services, and utility outages during disconnection, moving, and reconnection to a minimum.

C. Keys Energy shall be notified two weeks in advance in writing by the contractor for any KEYS support equipment required by the Contractor during construction. No additional payment will be paid for this coordination.

END OF SECTION

SECTION 01300
SUBMITTALS

PART 1 - GENERAL

1.1 GENERAL

A. Inquiries: Direct to ENGINEER regarding procedure, purpose, or extent of Submittal.

B. Submittal Submission Procedures: As provided in General Conditions, as specified herein, and as may otherwise be established during the preconstruction conference.

C. OWNER's Authorization: At any time, OWNER may authorize changes to procedures and requirements for Submittals, as necessary to accomplish specific purpose of each Submittal. Such authorization will be by Field Order or Work Change Directive.

D. Timeliness: Make submissions in accordance with requirements of individual Specification sections, as shown on the current accepted schedule of Submittals submissions, and in such sequence as to cause no delay in Work or in work of other contractors.

E. Identification of Submittals:

1. Complete, sign, and transmit with each Submittal package, one Transmittal of CONTRACTOR's Submittal Form.
2. Identify each Submittal with numbering and tracking system reviewed by ENGINEER:
   a. Sequentially number each Submittal.
   b. Resubmission of a Submittal will have original number with sequential alphabetic suffix.
3. Show date of submission and dates of previous submissions.
4. Show Project title and OWNER's contract identification and contract number.
5. Show names of CONTRACTOR, Subcontractor or Supplier, and manufacturer as appropriate.
6. Identify, as applicable, Contract Document section and paragraph to which Submittal applies.
7. Clearly identify revisions from previous submissions.

F. Incomplete Submittal Submissions:

1. At ENGINEER's sole discretion, ENGINEER will either (i) return the entire Submittal for CONTRACTOR's revision/correction and resubmission, or (ii) retain portions of the Submittal and request submission/resubmission of specified items or as noted thereon.

2. Submittals which do not clearly bear CONTRACTOR's specific written indication of CONTRACTOR review and approval of Submittal or which are transmitted with an unsigned or uncertified submission form or as may otherwise be required under Contract Documents, will be returned to CONTRACTOR unreviewed for resubmission in accordance with Contract Documents.

3. Delays, re-sequencing or other impact to Work resulting from CONTRACTOR's submission of unchecked or unreviewed, incomplete, inaccurate or erroneous, or nonconforming Submittals,

which will require CONTRACTOR's resubmission of a Submittal for ENGINEER's review, shall not constitute a basis of claim for adjustment in Contract Price or Contract Times.

G. Non-specified Submissions: Submissions not required under these Contract Documents and not shown on schedule of Submittals submissions will not be reviewed and will be returned to CONTRACTOR.

H. Transmit submittals in accordance with current accepted schedule of Submittal submissions, and deliver the ENGINEER designated by the ENGINEERing Department of the City of Key West.

I. Disposition of Submittals: As specified herein for administrative Submittals. ENGINEER will review, stamp, and indicate requirements for resubmission or acceptance on Submittal as follows:

1. No Exceptions Taken.

2. Reviewed as Noted:
   a. Reference the General Conditions for intent.
   b. CONTRACTOR may proceed to perform Submittal related Work.
   c. One copy for ENGINEER’s file.
   d. One copy returned to CONTRACTOR.

3. Revise and Resubmit (Revise/Correct or Develop Replacement and Resubmit):
   a. Revise/correct in accordance with ENGINEER's comments and resubmit.
   b. One copy to ENGINEER's file.
   c. One copy returned to CONTRACTOR appropriately annotated.

J. Payment for the work in this section will be incidental to the contract.

END OF SECTION

PART 5
DRAWINGS

MALLORY SQUARE PUBLIC TOILET FACILITY

KEY WEST, FLORIDA

SCOPE OF WORK
PUBLIC TOILETS

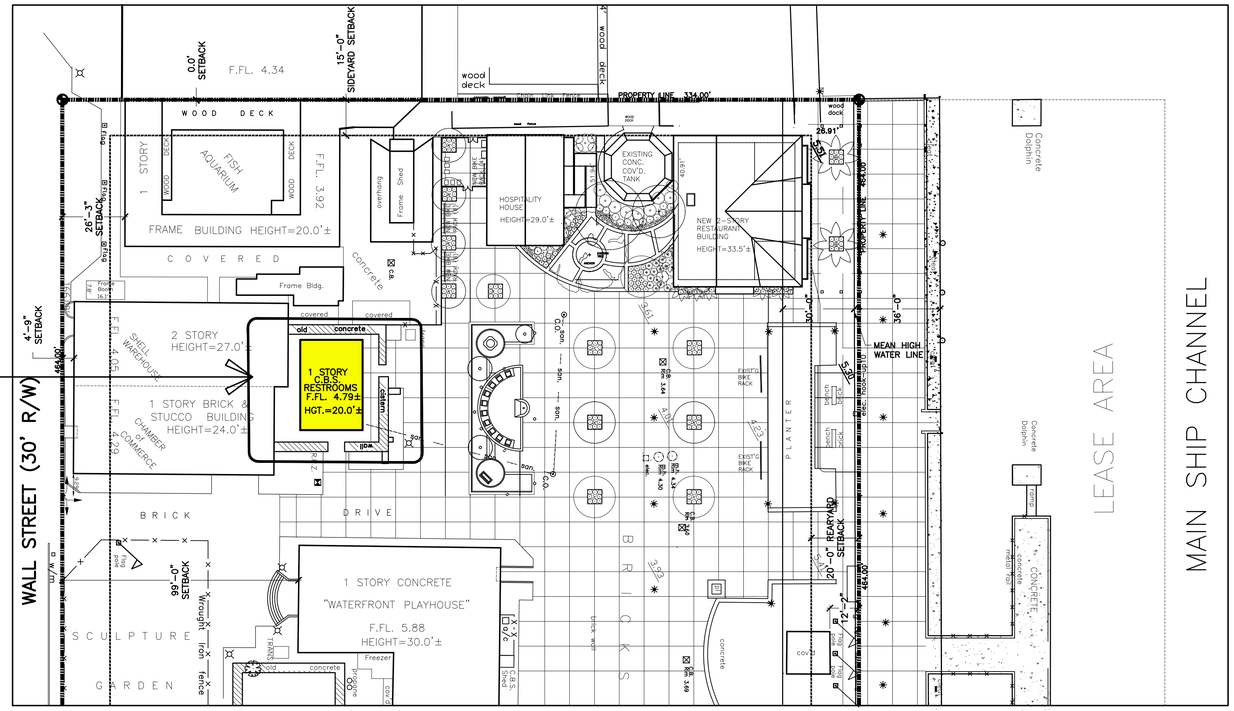

SITE PLAN

SCALE: 1"=30'-0"

DRAWING LIST
A-1 SITE PLAN
EX-1 EXISTING SITE PLAN
P-1 PLUMBING PLAN AND RISERS
P-2 PLUMBING DETAILS

CLIENT:
CITY OF KEY WEST
ENGINEERING SERVICES
PROJECT MANAGER : JANET MUCCINO

3140 FLAGLER AVENUE
KEY WEST, FL 33040
305-809-3867

WILLIAM P. HORN
ARCHITECT , P.A.

915 EATON ST.
KEY WEST,
FLORIDA
33040

TEL. (305) 296-8302
FAX (305) 296-1033

LICENSE NO.
AA 0003040

MALLORY SQUARE
PUBLIC TOILET
FACILITY
KEY WEST, FLORIDA.

SEAL

DATE
04-16-15

REVISIONS

DRAWN BY

PROJECT NUMBER
1506

A-1

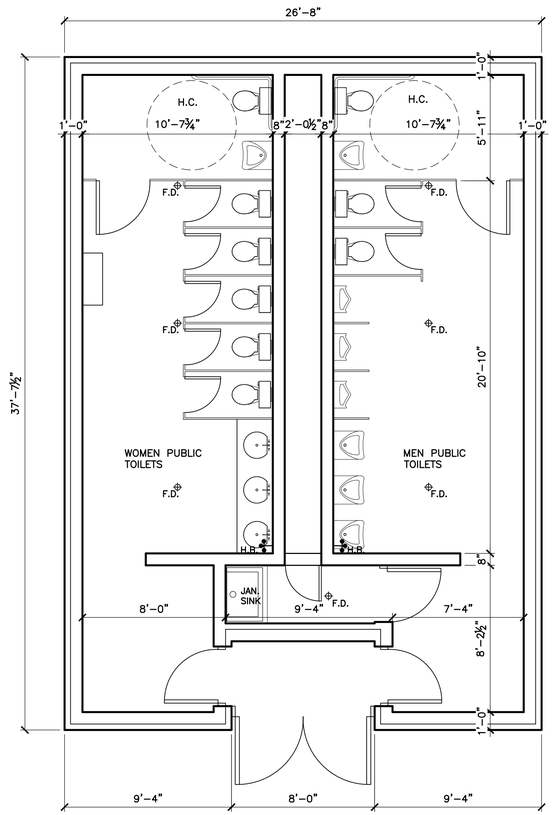

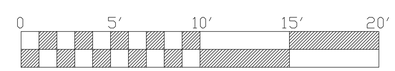

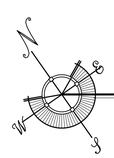

EXISTING FLOOR PLAN

SCALE: 1/4"=1'-0"

WILLIAM P. HORN
ARCHITECT , P.A.

915 EATON ST.
KEY WEST,
FLORIDA
33040

TEL. (305) 296-8302
FAX (305) 296-1033

LICENSE NO.
AA 0003040

MALLORY SQUARE
PUBLIC TOILET
FACILITY
KEY WEST, FLORIDA.

SEAL

DATE
04-16-15

REVISIONS

DRAWN BY

PROJECT NUMBER
1506

EX-1

MALLORY SQUARE PUBLIC TOILET FACILITY

KEY WEST, FLORIDA

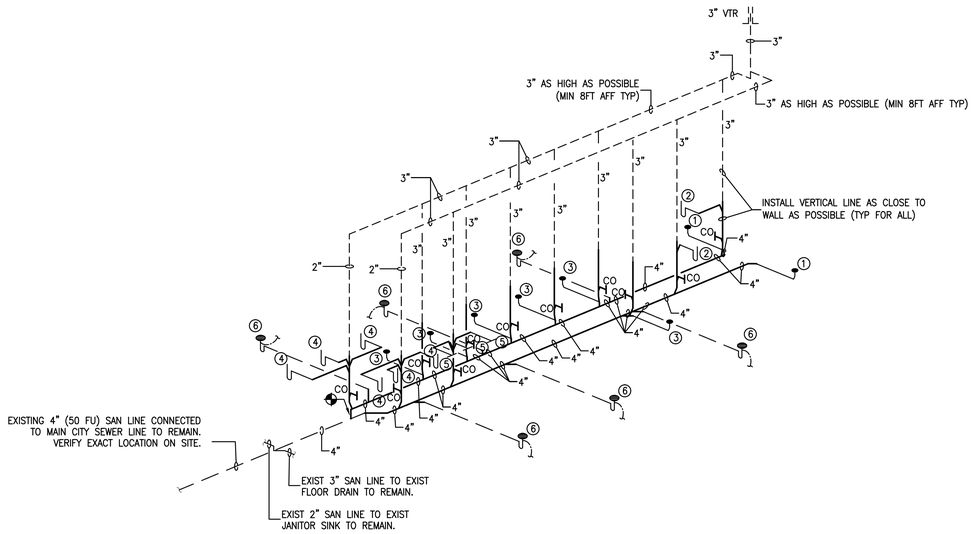

SANITARY PIPING ISOMETRIC

N.T.S.

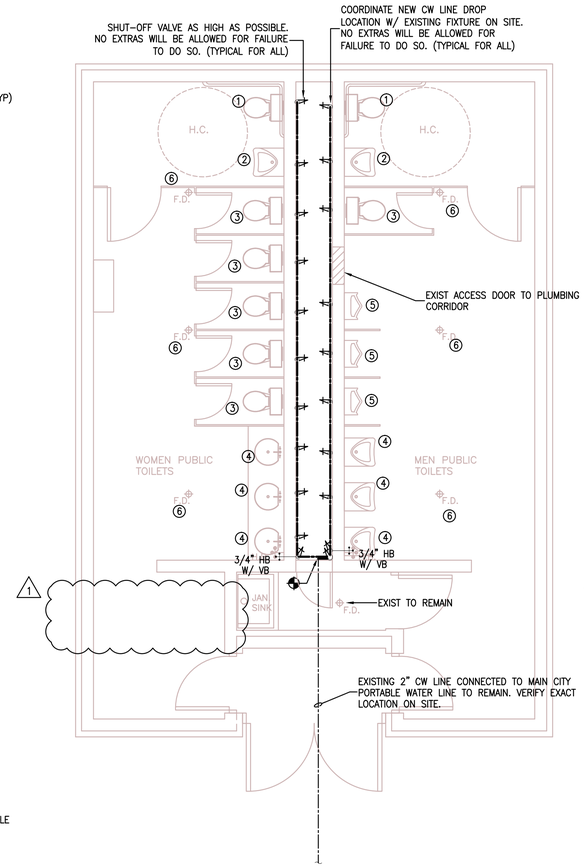

WATER PLAN

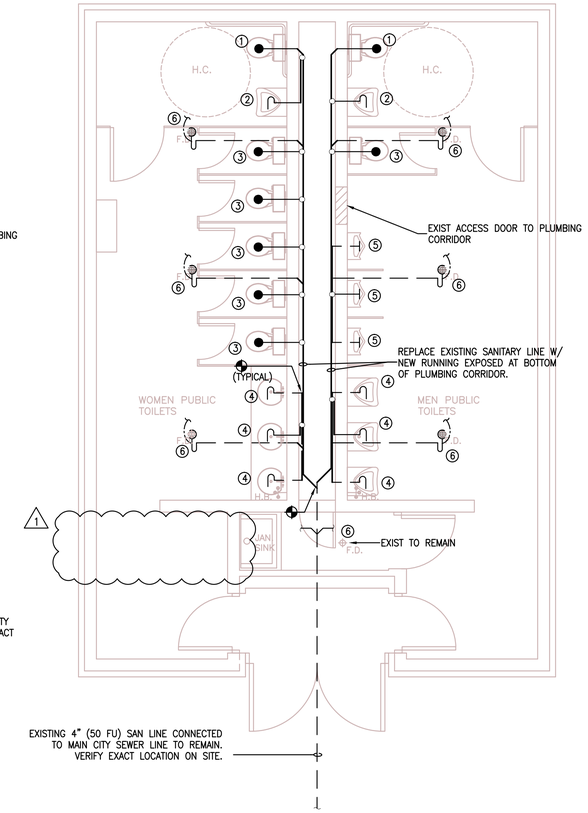

SANITARY PLAN

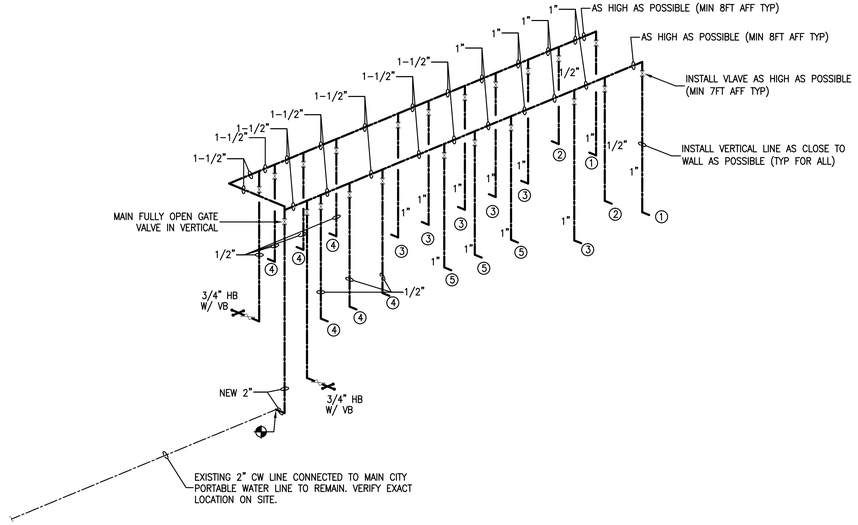

WATER PIPING ISOMETRIC

N.T.S.

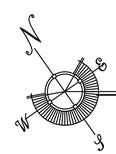

PLUMBING FLOOR PLAN

SCALE: 1/4"=1'-0"

SCOPE OF WORK

1. EXISTING FIXTURES TO REMAIN. REPAIR IF REQUIRED.
2. EXISTING PLUMBING LINES OUTSIDE OF EXIST PLUMBING SERVICE CORRIDOR TO REMAIN.
3. ALL PLUMBING LINES INSIDE EXIST PLUMBING SERVICE CORRIDOR WILL BE REPLACED WITH NEW AND RELOCATED AS SHOWN TO CLEAR SPACE FOR SERVICING. SEE FLOOR PLAN.
4. REPLACE ALL INDIVIDUAL MANUAL VALVE AT FIXTURE W/ NEW TO MATCH EXISTING (INSIDE BATHROOMS).
5. REPLACE ALL INDIVIDUAL FLUSH VALVE (IF REQUIRED) AT FIXTURE W/ NEW TO MATCH EXISTING (INSIDE BATHROOMS).

FIXTURE LEGEND

1. EXIST ADA COMPLAINT WATER CLOSET TO REMAIN. VERIFY EXACT LOCATION. REPAIR IF DAMAGED.
2. EXIST ADA COMPLAINT LABORATORY TO REMAIN. VERIFY EXACT LOCATION. REPAIR IF DAMAGED.
3. EXIST WATER CLOSET TO REMAIN. VERIFY EXACT LOCATION. REPAIR IF DAMAGED.
4. EXIST LABORATORY TO REMAIN. VERIFY EXACT LOCATION. REPAIR IF DAMAGED.
5. EXIST URINAL TO REMAIN. VERIFY EXACT LOCATION AND PRIMER LINE. REPAIR IF REQUIRED. REPLACE PRIMER LINE IF MISSING OR DAMAGED.
6. EXIST 3" FLOOR DRAIN. VERIFY EXACT LOCATION AND PRIMER LINE. REPAIR IF REQUIRED. REPLACE PRIMER LINE IF MISSING OR DAMAGED.

WILLIAM P. HORN
ARCHITECT , P.A.

915 EATON ST.
KEY WEST,
FLORIDA
33040

TEL. (305) 296-8302
FAX (305) 296-1033

LICENSE NO.
AA 0003040

MALLORY SQUARE
PUBLIC TOILET
FACILITY
KEY WEST, FLORIDA.

SEAL

DATE
04-16-15

REVISIONS
1 OWNER REVISION 09-30-15

DRAWN BY

PROJECT NUMBER
1506

P-1

Innovative Engineering Group Inc. CA#6717
2500 NW 79th Ave., #240
Doral, FL 33122
305-468-1783
Sudhir K. Gupta, P.E.
Fla. Reg. No. 29189

PLUMBING LEGEND

SYMBOL	DESCRIPTION
	SANITARY WASTE PIPING
	COLD WATER PIPING (CW)
	140°F HOT WATER PIPING (HW)
	185°F HOT WATER PIPING (HHW)
	SANITARY VENT PIPING
CD	CONDENSATE DRAIN PIPING
SD	STORM DRAIN PIPING
OSD	OVERFLOW STORM DRAIN PIPING
RWL	RAIN WATER LEADER
ORWL	OVERFLOW RAIN WATER LEADER
	GATE VALVE
	CHECK VALVE
	"P" TRAP
HB	HOSE BIBB (HB)
	WATER HAMMER ARRESTOR
VTR	VENT THRU ROOF
CO	CLEAN OUT
FCO	FLUSH FLOOR CLEAN OUT
FD W/TP	FLOOR DRAIN WITH TRAP PRIMER
COGG	CLEAN OUT ON GRADE
FD	FLOOR DRAIN
V	VENT
	TRAP PRIMER (RESEAL) TO CLOSEST FIXTURE
RD	ROOF DRAIN
ORD	OVERFLOW ROOF DRAIN
AFF	ABOVE FINISHED FLOOR

NOTE:
SYMBOLS INDICATED MAY NOT BE USED ON DRAWINGS

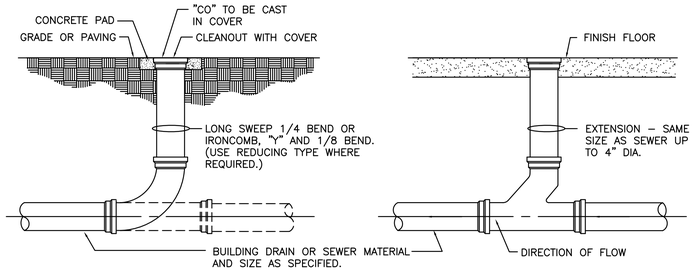

EXTERIOR CLEANOUT
(LIGHT TRAFFIC AREA)

INTERIOR FLOOR CLEANOUT

DETAIL OF CLEANOUTS
(NOT TO SCALE)

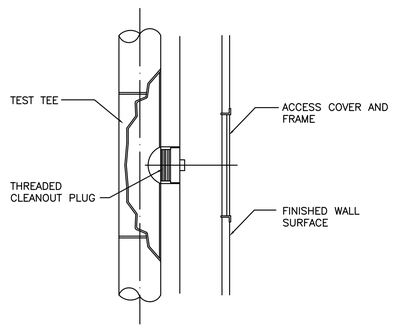

WALL CLEANOUT
(NOT TO SCALE)

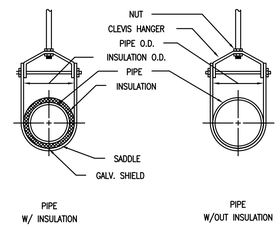

PIPE HANGERS–CLEVIS TYPE DETAIL
N.T.S.

PLUMBING SPECIFICATION

1. GENERAL:

MATERIAL SHALL BE NEW, UNUSED, BEST OF THEIR RESPECTIVE KINDS AND FREE FROM DEFECTS IN WORKMANSHIP; IN CONFORMANCE WITH THE LATEST PUBLICATIONS IN FORCE AT TIME OF BIDDING.

2. PIPE AND FITTINGS:

A. DRAINAGE WASTE AND VENT PIPING INCLUDING:
PVC DRAINAGE WASTE AND PIPING (DWV) CONFORMING TO ASTM D-2665

B. DOMESTIC WATER SUPPLY PIPING: COPPER PIPE TYPE 'L' WITH BRONZE OR WROUGHT COPPER SOLDER JOINT FITTINGS, ASTM.B88-78.

C. NOT USED

D. STORM DRAIN PIPING: AS HEREIN BEFORE SPECIFIED FOR SANITARY SOIL, WASTE AND VENT PIPING.

3. JOINTS AND METHODS OF CONNECTION:

A. DWV COPPER PIPE: JOINT WITH 95-5 TIN-ANTIMONY SOLDER, INSTALL PER MANUFACTURER'S RECOMMENDATIONS.

B. TYPE 'L' COPPER TUBE: JOIN WITH 95-5 TIN-ANTIMONY SOLDER, INSTALL PER MANUFACTURER'S RECOMMENDATIONS.

C. STEEL PIPE:

a. THREADED JOINTS: AFTER CUTTING AND BEFORE THREADING, REAM ALL PIPE AND REMOVE BURRS. MAKE JOINTS WITH JOINT COMPOUND APPLIED TO MALE THREADS ONLY.

b. FLANGED JOINTS: STANDARD WEIGHT, 150 P.S.I. STEEL, WITH APPROVED RED RUBBER GASKET OR NEOPRENE RUBBER GASKET, INSTALL AS PER MANUFACTURER'S RECOMMENDATIONS.

4. UNIONS AND FLANGES:

A. COPPER PIPE: BRONZE UNIONS FOR 2 INCHES AND SMALLER. FOR 2-1/2 INCHES AND LARGER USE BRONZE FLANGED CONNECTIONS 150 POUND CLASS.

B. DIELECTRIC UNIONS OR FLANGES: UNIONS SHALL MEET DIMENSIONAL REQUIREMENTS AND TENSILE STRENGTH OF PIPE UNIONS IN ACCORDANCE WITH FED. SPEC. WW-U-531E. UNIONS OR FLANGES SHALL BE SUITABLE FOR REQUIRED OPERATING PRESSURES AND TEMPERATURE CONDITIONS. UNIONS SHALL HAVE METAL CONNECTIONS ON BOTH ENDS. ENDS SHALL BE THREADED OR SOLDERED TO MATCH ADJACENT PIPING. METAL PARTS OF UNION OR FLANGED SHALL BE SEPAREATED TO PREVENT CURRENT FLOW BETWEEN DISSIMILAR METALS. EPCO DIELECTRIC PIPE FITTINGS OR EQUIVALENT.

5. ESCUTCHEONS:

CHROME PLATED OR STAINLESS STEEL WITH SET SCREWS FOR HOLDING SECURELY IN PLACE. USE ESCUTCHEONS ON PIPES PASSING THROUGH WALLS, FLOORS AND CEILINGS OF FINISHED AREAS.

6. NOT USED.

7. NOT USED.

8. TRAP PRIMER SHALL BE SELF PRIMING TYPE ON COLD WATER SUPPLY LINE AS MANUFACTURED BY PRECISION PLUMBING PRODUCTS, INC. "PRIME-RITE" #PR-500. WHEN TWO OR MORE TRAPS REQUIRE PRIMING, PROVIDE WITH DISTRIBUTION UNIT #DU-2, 3 OR 4 AND SUPPLY TUBE #SS-8 ASSEMBLY. IF USING DISTRIBUTION UNIT, PROVIDE ACCESS PANEL. INSTALL AS PER MANUFACTURER'S RECOMMENDATION.

9. FLOOR DRAINS: AS MANUFACTURED BY JOSAM.
A. FD: JOSAM 30000-A SERIES WITH 6"x6" SQUARE NIKALOY TOP AND 1/2" TRAP PRIMER CONNECTION.

PLUMBING GENERAL NOTES

A. ALL WORK SHALL BE DONE IN ACCORDANCE WITH FLORIDA PLUMBING CODE 2010 EDITION

1. SITE INVESTIGATION:

EXAMINATION OF CONTRACT DOCUMENTS AND SITE OF WORK: THE BIDDER IS REQUIRED, BEFORE SUBMITTING HIS PROPOSAL, TO VISIT THE SITE OF THE PROPOSED WORK AND FAMILIARIZE HIMSELF/HERSELF WITH THE NATURE AND EXTENT OF THE WORK AND ANY LOCAL CONDITIONS THAT MAY IN ANY MANNER AFFECT THE WORK TO BE DONE AND EQUIPMENT, MATERIALS AND LABOR REQUIRED THEREFORE. SINCE THE WORK INVOLVES EXISTING BUILDINGS, SYSTEM AND FACILITIES, SPECIAL CONSIDERATION SHALL BE GIVEN TO EXAMINATION OF WORKING CONDITIONS, EXISTING FACILITIES AND ALL BUILDING STRUCTURES TO FAMILIARIZE HIMSELF WITH ALL EXISTING CONDITIONS. VARIATIONS IN ROUTING AND/OR CONSTRUCTION SHOULD BE ANTICIPATED BY THIS CONTRACTOR AND ARE EXPRESSLY INCLUDED AS PART OF THE WORK WHENEVER REQUIRED AT NO ADDITIONAL COST TO THE OWNER. IGNORANCE ON THE PART OF THE CONTRACTOR WILL IN NO WAY RELIEVE HIM OF THE OBLIGATION AND RESPONSIBILITIES ASSUMED UNDER THIS CONTRACT.

2. NOT USED.

3. NOT USED.

4. CONTRACTOR SHALL VERIFY THE EXACT LOCATION OF EXISTING PIPES BEFORE COMMENCING TO WORK AND MAKE MODIFICATIONS AS REQUIRED WITHOUT ADDITIONAL COST TO THE OWNER.

5. ALL PIPING SHALL BE INSTALLED RECESSED IN BLOCK WALLS, CHASES OR PARTITIONS.

6. EXISTING PIPES SERVING AREAS NOT COVERED BY THIS CONTRACT BUT IN SERVICE AT THIS TIME SHALL NOT BE INTERRUPTED EXCEPT AS A TEMPORARY INTERRUPTION COORDINATED WITH THE OWNER.

7. PLUMBING CONTRACTOR SHALL PAY ALL FEES, INSPECTION AND CONNECTION CHARGES REQUIRED.

8. PLUMBING CONTRACTOR SHALL VERIFY ALL SPACE CONDITIONS AND DIMENSIONS AT JOB SITE PRIOR TO FABRICATION AND INSTALLATION OF MATERIALS AND EQUIPMENT.

9. COORDINATE ALL WORK WITH OTHER TRADES.

10. PLUMBING CONTRACTOR SHALL GUARANTEE ALL WORK FREE OF DEFECTS IN MATERIALS AND WORKMANSHIP FOR A PERIOD OF ONE YEAR FROM DATE OF ACCEPTANCE.

11. PROVIDE SHOCK ABSORBERS SIZE, QUANTITY AND LOCATION AS PER P.D.I. STANDARDS.

12. PROVIDE SHUT-OFF VALVE FOR EACH GROUP OF FIXTURE AND EACH FIXTURE SUPPLY.

13. WHEREVER DISSIMILAR METALS ARE TO BE JOINED, A DIELECTRIC FITTING SHALL BE PROVIDED TO CONNECT BOTH TYPES OF PIPES.

14. CONTRACTOR SHALL BE RESPONSIBLE TO COORDINATE ALL ROUGH-INS WITH THE MANUFACTURER BEFORE MAKING ANY INSTALLATION.

15. POTABLE COLD WATER SYSTEMS SHALL BE "LEAD FREE" WITH LEAD CONTENT NOT EXCEEDING 0.2 PERCENT FOR SOLDER AND FLUXES AND 8 PERCENT FOR PIPE FITTINGS, FIXTURES AND TRIM. CONTRACTOR SHALL VERIFY MANUFACTURER'S COMPLIANCE.

16. ALL POTABLE COLD WATER SYSTEMS SHALL BE FLUSHED CLEAR, STERILIZED WITH AN APPROVED SOLUTION AND THROUGHLY FLUSHED OF ALL RESIDUAL SOLUTION AFTER FINAL PRESSURE TESTS AND WITH ALL TRIM AND CONNECTIONS INSTALLED.

17. PROVIDE SHUT-OFF AND VACUUM BREAKER TO ALL HOSE BIBBS AND FAUCETS WITH HOSE-END CONNECTIONS.

18. ALL FLOOR DRAINS SHALL HAVE TRAP PRIMERS TO PROTECT THE SEAL OF THE TRAP.

19. NOT USED

20. DRAINAGE SYSTEM DESIGN IS BASED ON 1/8" PER FOOT MINIMUM FALL FOR PIPES 3" OR LARGER AND 1/4" PER FOOT MINIMUM FALL FOR PIPES 2" OR SMALLER, ANY DEVIATIONS SHALL BE APPROVED BY ARCHITECT/ENGINEER.

21. ALL VENT THROUGH ROOF OPENINGS SHALL BE OFFSETED TO A MINIMUM DISTANCE OF 3'-0" FROM PARRAPET WALL OR ROOF EDGE. SEE ARCHITECTURAL DRAWINGS FOR ROOF FLASHING. LEAD FLASHING WILL NOT BE ACCEPTED.

22. DRAIN PIPES UNDER LAVATORIES SHALL BE INSULATED WITH PRE-MANUFACTURED SLEEVE IN ACCORDANCE WITH FLORIDA PLUMBING CODE 404.6.4. THERE SHALL BE NO SHARP OR ABRASIVE SURFACES UNDER LAVATORIES.

UL FIRE RESISTANCE DIRECTORY:
A. FILLS, VOIDS OR CAVITY MATERIALS (XHHW)
B. FIRESTOP DEVICES (XHJI)

UL1479
UL2079

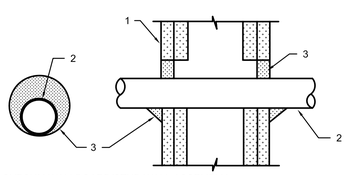

1. PRE-RATED GYPSUM WALLBOARD/STUD WALL ASSEMBLY

2. METALLIC PIPE:
A) STEEL PIPE - 12" Ø (OR SMALLER) SCH. 10 (OR HEAVIER) STEEL PIPE.
B) IRON PIPE - 12"Ø (OR SMALLER) CAST OR DUCTILE IRON PIPE.
C) COPPER TUBING - 4"Ø (OR SMALLER) TYPE L (OR HEAVIER) COPPER TUBING.
D) COPPER PIPE - 4Ø (OR SMALLER) REGULAR (OR HEAVIER) COPPER PIPE.
E) CONDUIT - 4"Ø (OR SMALLER) EMT OR 6" Ø (OR SMALLER) STEEL CONDUIT.
THE ANNULAR SPACE SHALL BE MIN. 0" TO MAX 1" WITHIN THE FIRESTOP SYSTEM.

3. TREMSTOP1A - MIN ½" THICKNESS OF SEALANT APPLIED WITHIN OPENING. MIN 3/8" CAN'T BEAD OF SEALANT TO BE APPLIED AT AREAS OF POINT CONTACT.

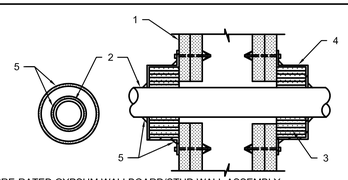

1. PRE-RATED GYPSUM WALLBOARD/STUD WALL ASSEMBLY

2. PLASTIC PIPE - NOM. 4"Ø (OR SMALLER) SCH. 40 PVC PIPE FOR USE IN CLOSED OR OPEN PIPING SYSTEMS. SEE TABLE BELOW FOR REQUIRED ANNULAR SPACE.

3. TREMSTOP WS - INTUMESCENT WRAP STRIP, CONTINUOUSLY WRAPPED AROUND OUTER CIRCUMFERENCE OF THE PIPE. SEE TABLE BELOW FOR MIN. WRAPS REQUIRED.

PIPE DIAM.	ANG. SPACE	# OF WRAPS
2	3/16	3
3	1/8	4
4	1/8	6

4. TREMSTOP MCR - PREFABRICATED STEEL COLLAR WRAPPED OVER THE WRAP STRIPS (ITEM 3) AND MECHANICALLY FASTENED TO BOTH SIDES OF WALL ASSEMBLY.

5. TREMSTOP 1A OR TREMSTOP ACRYLIC (OPTIONAL) - MIN ¼" BEAD OF SEALANT APPLIED AT THE WALLBOARD/DEVICE AND DEVICE/PIPE INTERFACES.

NOTE: TREMSTOP D CAN BE USED IN PLACE OF TREMSTOP WS AND TREMSTOP MCR.

"TREMCO" MODEL: TREMSTOP IA FOR 1 OR 2 HOUR FIRE RATED PENETRATION FOR SINGLE METALLIC PIPE THRU GYPSUM WALL

"TREMCO" MODEL: TREMSTOP D FOR 2 HOUR FIRE RATED PENETRATION FOR SINGLE PLASTIC PIPE THRU GYPSUM WALL

FIRE STOPPING DETAIL
N.T.S.

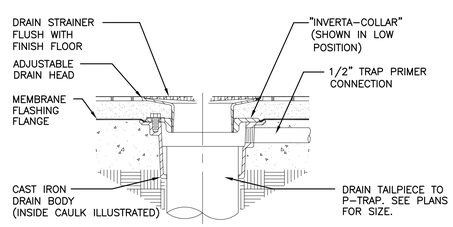

TYPICAL FLOOR DRAIN (FD) DETAIL
N.T.S.

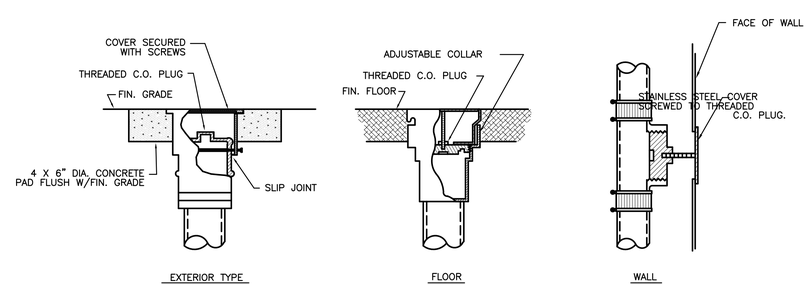

TYPICAL CLEANOUT DETAIL
N.T.S.

WILLIAM P. HORN
ARCHITECT , P.A.

915 EATON ST.
KEY WEST,
FLORIDA
33040

TEL. (305) 296-8302
FAX (305) 296-1033

LICENSE NO.
AA 0003040

MALLORY SQUARE
PUBLIC TOILET
FACILITY
KEY WEST, FLORIDA.

SEAL

DATE
04-16-15

REVISIONS

DRAWN BY

PROJECT NUMBER
1506

Innovative Engineering Group Inc. CA#6717
2500 NW 79th Ave., #240
Doral, FL 33122
305-468-1783
Sudhir K. Gupta, P.E.
Fla. Reg. No. 29189

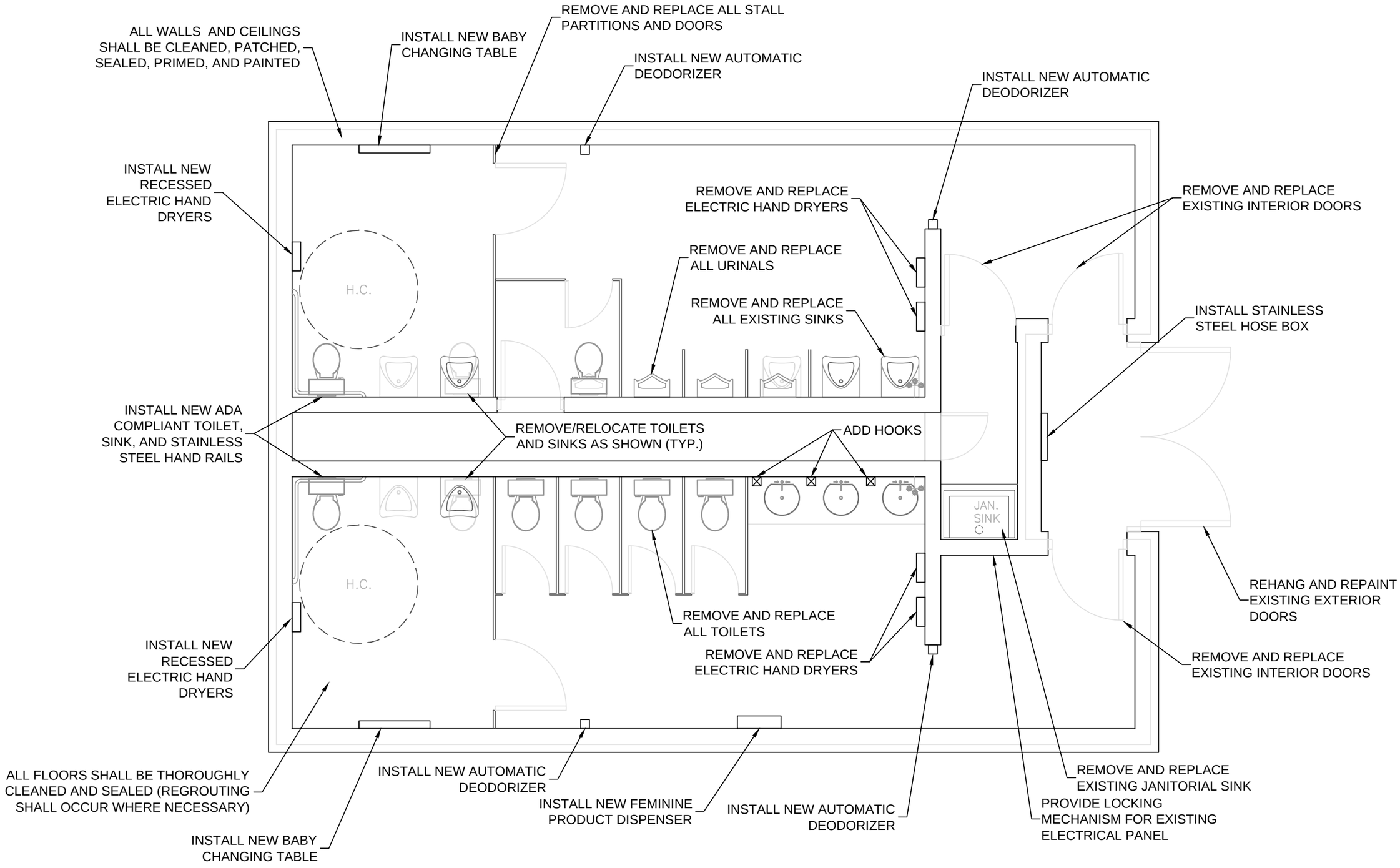

City of Key West Engineering Services 3132 Flagler Avenue, Key West, FL 33040	TITLE MALLORY SQUARE PUBLIC BATHROOM IMPROVEMENTS	DRAWN JTJ SCALE 1" = 4' DATE 10/30/15 SHEET 1 of 2	

NOTES:

1.) REPLACE ALL EXISTING TOILETS WITH NEW ADA COMPLIANT KOHLER KINGSTON, K-4323-0, TOILETS WITH SELECTRONIC AUTOMATIC FLUSH VALVES (OR EQUAL). ALL TOILET STALLS SHALL RECEIVE NEW BOBRICK TOILET PAPER DISPENSERS (B-2890) AND IN THE WOMEN'S ROOM BOBRICK SANITARY NAPKIN BINS, B-270 (OR EQUAL) SHALL BE INSTALLED IN EACH TOILET STALL.

2.) REPLACE ALL EXISTING URINALS WITH NEW KOHLER FRESHMAN URINALS, K-4989-R, WITH SELECTRONIC AUTOMATIC FLUSH VALVES (OR EQUAL).

3.) ALL FLOORS SHALL BE THOROUGHLY CLEANED AND REGROUTED (WHERE NECESSARY).

4.) ALL FLOORS SHALL BE SEALED WITH STONETECH ALL PURPOSE GROUT SEALER (OR EQUAL).

5.) ALL WALLS SHALL BE SEALED WITH SEALKRETE ORIGINAL WATERPROOFING PRIMER/SEALER (OR EQUAL).

6.) ALL WALLS SHALL BE PAINTED WITH ZINSSER WATERTITE MOLD AND MILDEW-PROOF WATERPROOFING PAINT (OR EQUAL). PAINT COLOR TO BE SELECTED BY OWNER.

7.) ALL PARTITIONS AND URINAL SCREENS SHALL BE REPLACED WITH BOBRICK DURALINE COMPACT LAMINATE (SOLID PHENOLIC) PARTITIONS AND SCREENS, 1180 SERIES (OR EQUAL). PARTITION COLOR TO BE SELECTED BY OWNER.

8.) ALL STALLS AND SINK AREAS SHALL RECEIVE BOBRICK HEAVY DUTY CLOTHES HOOKS, B-2116 (OR EQUAL). APPROXIMATELY 18 HOOKS TO BE INSTALLED IN LOCATIONS TO BE DETERMINED BY OWNER.

9.) REMOVE AND REPLACE EXISTING JANITORIAL SINK WITH NEW STERN WILLIAMS ELFIN 24" BY 36" MOP SERVICE BASIN.

10.) REMOVE AND REPLACE ALL EXISTING ELECTRIC HAND DRYERS WITH XLERATOR HAND DRYERS MODEL XL-SB (OR EQUAL). THE HANDICAP STALLS SHALL RECEIVE NEW XLERATOR MODEL XL-SB HAND DRYERS WITH THE RECESS KIT (OR EQUAL).

11.) REMOVE EXISTING SINKS (INCLUSIVE OF HANDICAP STALL SINKS) AND REPLACE WITH NEW ADA COMPLIANT AMERICAN STANDARD LUCERNE WALL-HUNG LAVATORY (OR EQUAL). ALL SINKS SHALL BE ACCOMPANIED BY NEW MIRRORS (BRADLEY 781), BOBRICK SOAP DISPENSERS (B-2013), BOBRICK B2116 HOOKS FOR BAGS, AND SELECTRONIC CAST PROXIMITY METERING FAUCETS (OR EQUAL). ALL NEW FIXTURE LOCATIONS TO BE ADA COMPLIANT.

12.) INSTALL NEW DAYTON GABLE ATTIC VENTILATOR (OR EQUAL) IN EXISTING ROOF GABLE AT FRONT OF BUILDING.

13.) INSTALL NEW AIRDELIGHTS MICROBURST 3000 AIR FRESHENER DISPENSER (OR EQUAL) WHERE NOTED IN THE PLANS.

14.) A NEW SIGN SHALL BE INSTALLED OUTSIDE OF THE EXISTING CONCRETE WALL (ALONG THE EXTENSION OF TIFTS STREET) TO PROMOTE VISIBILITY TO THE PUBLIC.

15.) NEW MENS ROOM AND WOMENS ROOM SIGNS SHALL BE INSTALLED ON THE EXTERIOR BRICK WALL AND ON THE NEW ENTRY DOORS. NEW HANDICAP AND CHANGING TABLE SIGNS SHALL BE INSTALLED ON THE APPROPRIATE PARTITIONS WHERE DIRECTED.

16.) EXISTING WINDOWS SHALL BE CLEANED AND NEW SCREENS SHALL BE PROVIDED (14 IN TOTAL).

17.) ALL EXISTING LIGHT FIXTURES SHALL BE REMOVED AND REPLACED WITH AN EQUIVALENT FIXTURE AND LED BULBS.

18.) ALL EXISTING EXHAUST FANS, SHUTTERS, AND CEILING VENTS SHALL BE THOROUGHLY CLEANED.

19.) THE BATHROOM ENTRY WAY AND EXTERIOR WALLS SHALL BE THOROUGHLY CLEANED AND PRESSURE WASHED.

20.) REMOVE AND REPLACE THE EXISTING FEMININE PRODUCT DISPENSER WITH A NEW BRADLEY RECESSED NAPKIN/TAMPON VENDOR, BRADLEY 407 (OR EQUAL).

21.) REMOVE EXISTING HANDICAP GRAB BARS AND REPLACE WITH BOBRICK 1 1/2" DIAMETER STAINLESS STEEL GRAB BARS WITH SNAP FLANGES, B-6806 (OR EQUAL).

22.) INSTALL NEW BRADLEY STAINLESS STEEL BABY CHANGING STATIONS, BRADLEY 962 (OR EQUAL) IN BOTH HANDICAP RESTROOMS

23.) FIXTURES SHALL BE INSTALLED IN THE LOCATIONS AS SHOWN ON THIS PLAN.

24.) ALL REMOVED FIXTURE SHALL BECOME THE PROPERTY OF THE KEY WEST PUBLIC WORKS DEPARTMENT AND DELIVERED TO A SITE TO BE DETERMINED.