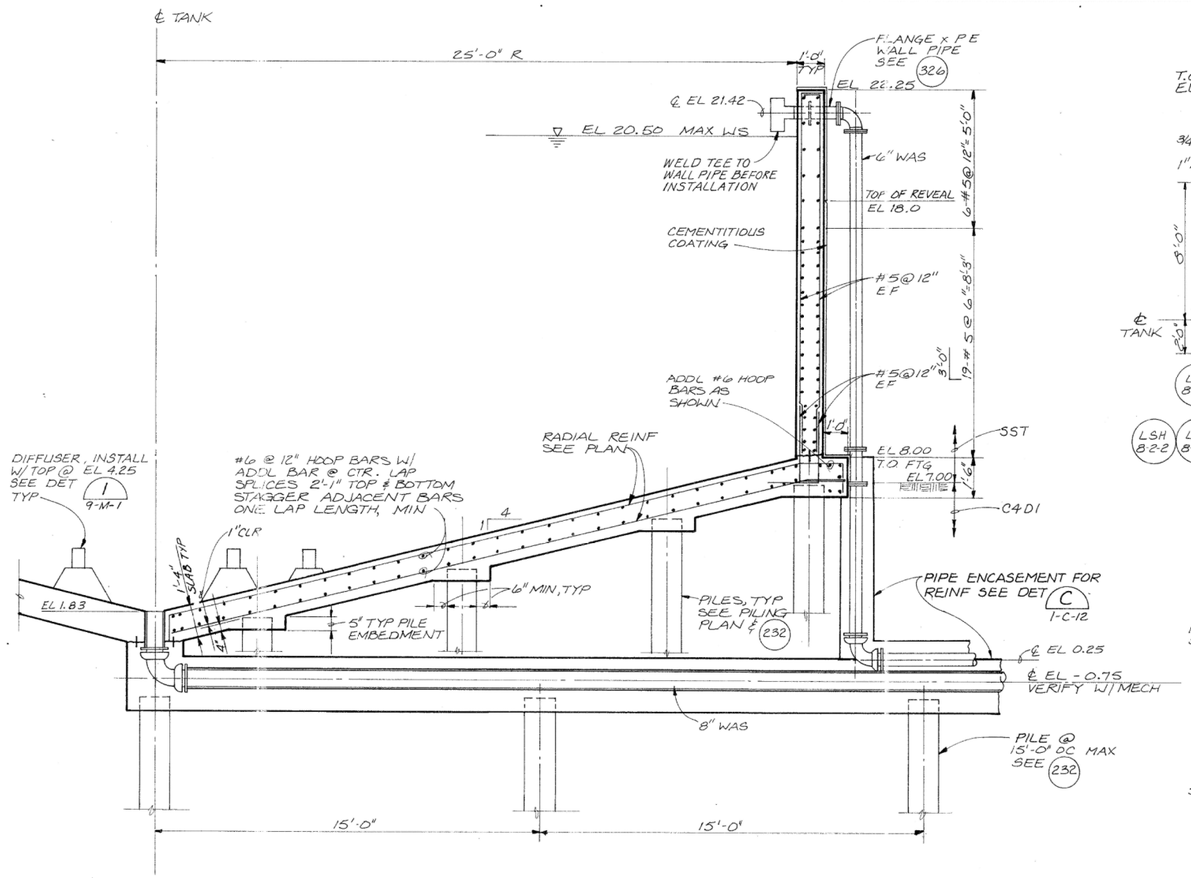

SECTION A
3/8" = 1'-0"

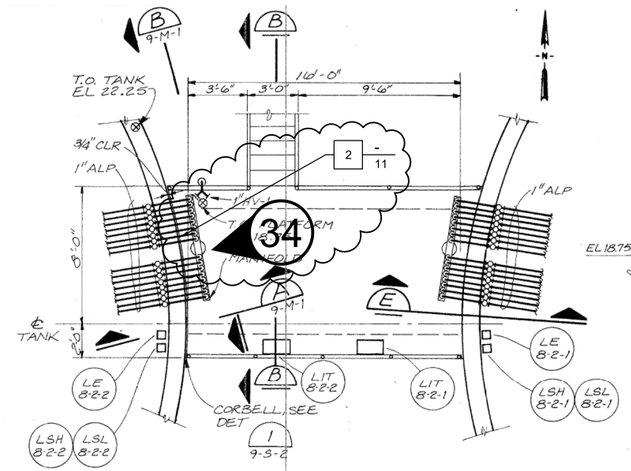

PLATFORM PLAN
1/4" = 1'-0"

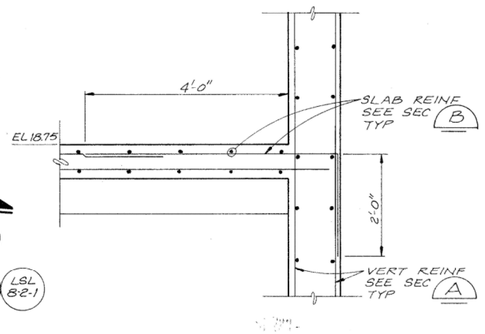

SECTION E
3/4" = 1'-0"

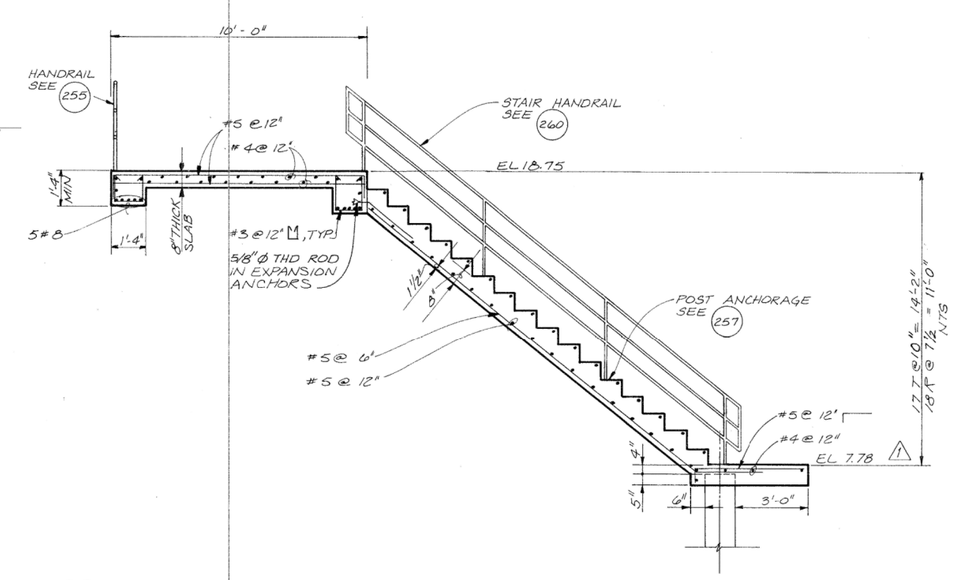

SECTION B
3/8" = 1'-0"

RECORD DRAWINGS

Revisions Drawn by DKS Date JUNE 1, 1990

THESE RECORD DRAWINGS HAVE BEEN PREPARED, IN PART, ON THE BASIS OF INFORMATION COMPILED BY OTHERS. THEY ARE NOT INTENDED TO REPRESENT IN DETAIL THE EXACT LOCATION, TYPE OF COMPONENT NOR MANNER OF CONSTRUCTION. THE ENGINEER WILL NOT BE RESPONSIBLE FOR ANY ERRORS OR OMISSIONS WHICH HAVE BEEN INCORPORATED INTO THE RECORD DRAWINGS.

NO.	DATE	REVISION	BY	APVD

DSGN	DR	CHK	APVD
D LANGE	D LANGE	S PASTEUR	D GARCIA

D LANGE

REUSE OF DOCUMENTS: THIS DOCUMENT, AND THE IDEAS AND DESIGNS INCORPORATED HEREIN, AS AN INSTRUMENT OF PROFESSIONAL SERVICE, IS THE PROPERTY OF CH2M HILL AND IS NOT TO BE USED, IN WHOLE OR IN PART, FOR ANY OTHER PROJECT WITHOUT THE WRITTEN AUTHORIZATION OF CH2M HILL.
©CH2M HILL 2015. ALL RIGHTS RESERVED.

3011 S.W. WILLISTON ROAD
GAINESVILLE, FLORIDA 32608
EB0000072 AAC001992
Delayne Lange PE 70194

SWR CONCRETE REPAIRS
RICHARD A. HEYMAN
ENVIRONMENTAL PROTECTION FACILITY
AND FLEMING KEY BRIDGE

CITY OF KEY WEST
KEY WEST, FLORIDA

CH2MHILL®

STRUCTURAL
SLUDGE STORAGE
STRUCTURAL/MECHANICAL
SECTIONS AND DETAILS

VERIFY SCALE
BAR IS ONE INCH ON ORIGINAL DRAWING.
0 1"

DATE	AUGUST 2015
PROJ	486025
DWG	R-10
SHEET	14 of 37

BID DOCUMENTS

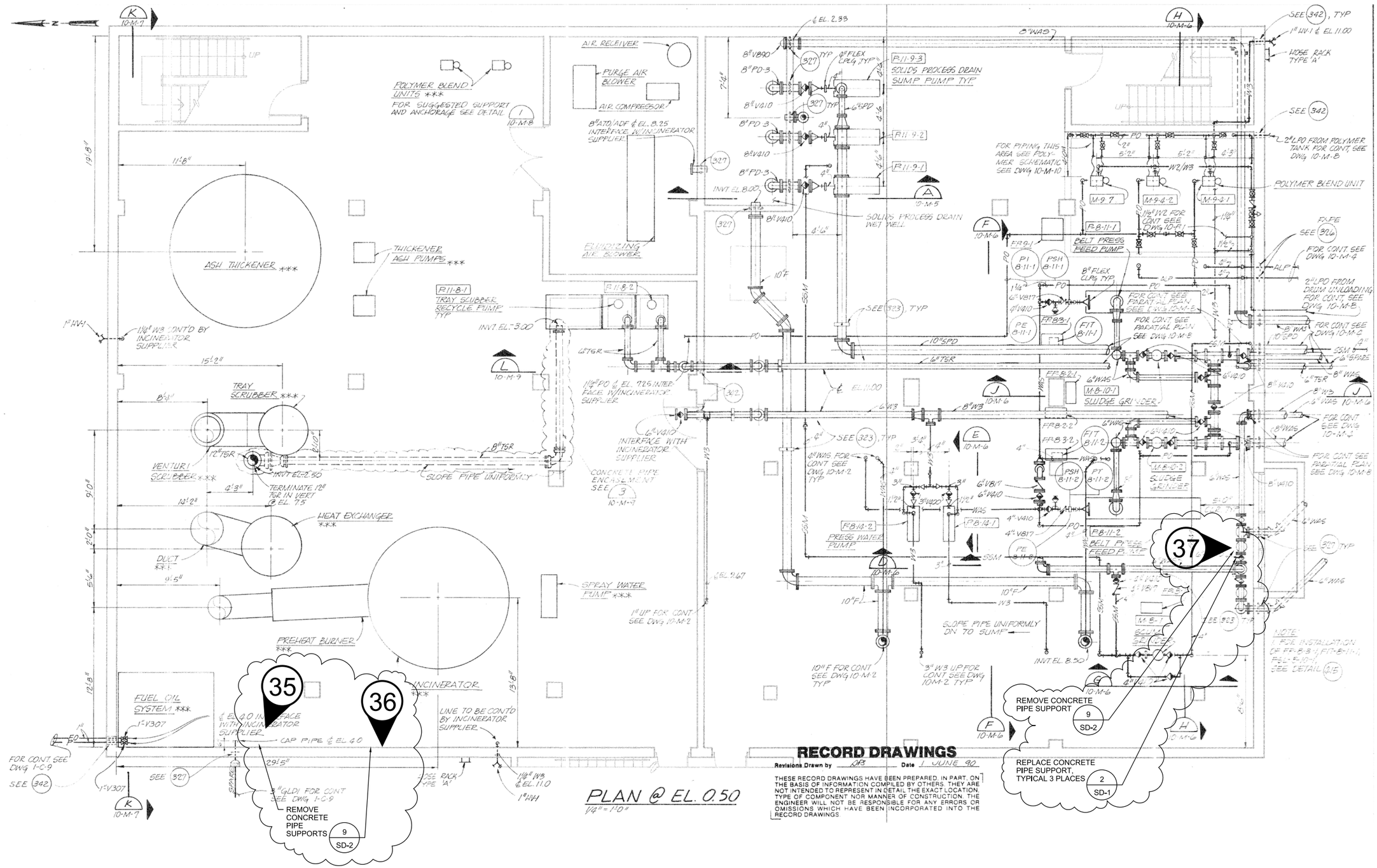

PLAN @ EL. 0.50

1/4" = 1'-0"

RECORD DRAWINGS

Revisions Drawn by DB Date 1 JUNE 90

THESE RECORD DRAWINGS HAVE BEEN PREPARED, IN PART, ON THE BASIS OF INFORMATION COMPILED BY OTHERS. THEY ARE NOT INTENDED TO REPRESENT IN DETAIL THE EXACT LOCATION, TYPE OF COMPONENT NOR MANNER OF CONSTRUCTION. THE ENGINEER WILL NOT BE RESPONSIBLE FOR ANY ERRORS OR OMISSIONS WHICH HAVE BEEN INCORPORATED INTO THE RECORD DRAWINGS.

NO.	DATE	REVISION	BY	APVD

DSGN	DR	CHK	APVD
D LANGE	S PASTEUR	D GARCIA	D LANGE

CH2MHILL®
3011 S.W. WILLISTON ROAD
GAINESVILLE, FLORIDA 32608
EB0000072 AAC001992
Delayne Lange PE 70194

SWR CONCRETE REPAIRS
RICHARD A. HEYMAN
ENVIRONMENTAL PROTECTION FACILITY AND FLEMING KEY BRIDGE

CITY OF KEY WEST
KEY WEST, FLORIDA

MECHANICAL

SOLIDS BUILDING AND INCINERATOR MECHANICAL PLAN

REUSE OF DOCUMENTS: THIS DOCUMENT, AND THE IDEAS AND DESIGNS INCORPORATED HEREIN, AS AN INSTRUMENT OF PROFESSIONAL SERVICE IS THE PROPERTY OF CH2M HILL AND IS NOT TO BE USED, IN WHOLE OR IN PART, FOR ANY OTHER PROJECT WITHOUT THE WRITTEN AUTHORIZATION OF CH2M HILL.

©CH2M HILL 2015. ALL RIGHTS RESERVED.

VERIFY SCALE
BAR IS ONE INCH ON ORIGINAL DRAWING.
0 1"

DATE	AUGUST 2015
PROJ	486025
DWG	R-11
SHEET	15 of 37

BID DOCUMENTS

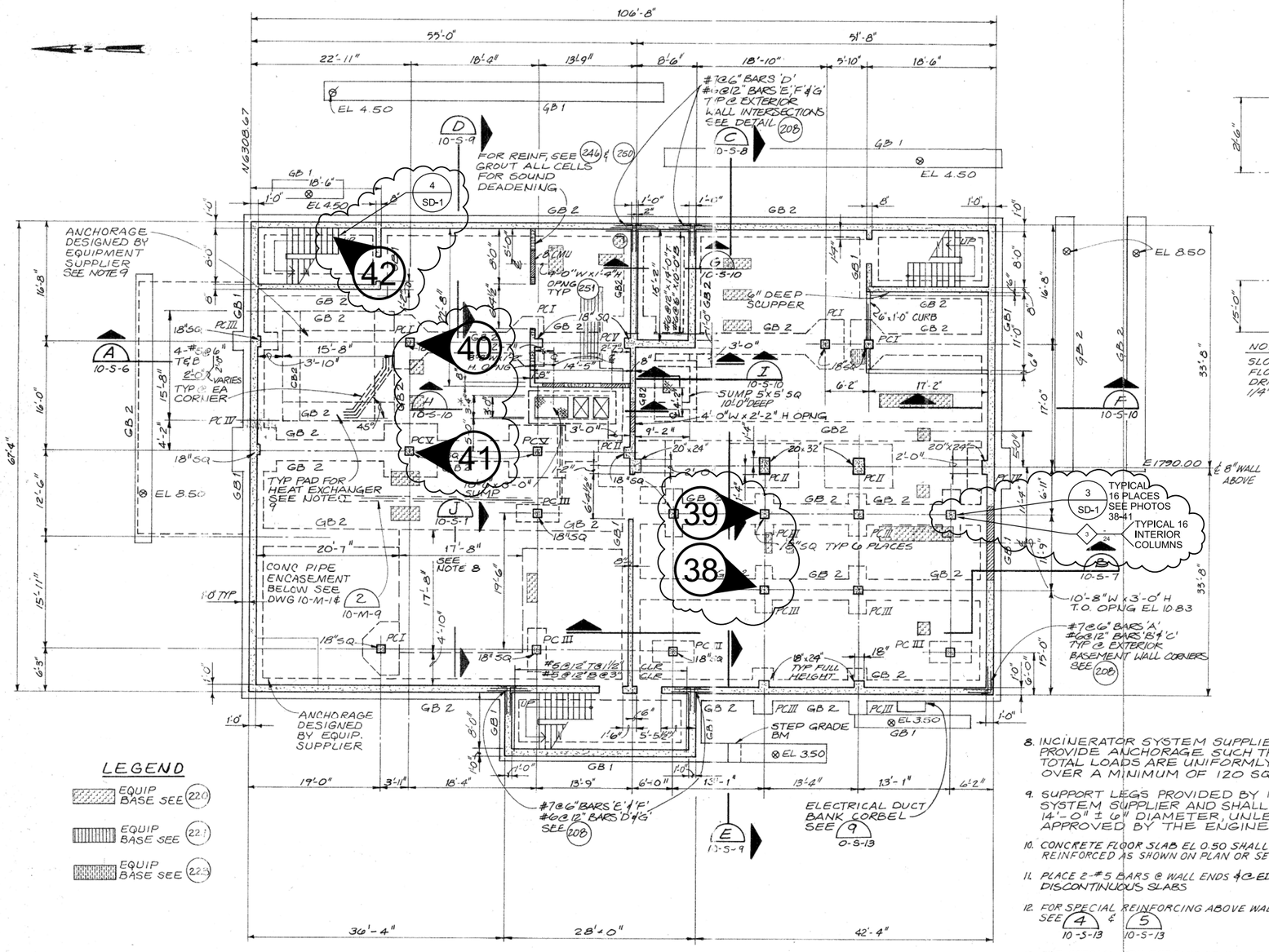

FOUNDATION PLAN @ EL. 0.50

1/8" = 1'-0"

LEGEND

- EQUIP BASE SEE 22C
- EQUIP BASE SEE 22B
- EQUIP BASE SEE 22A

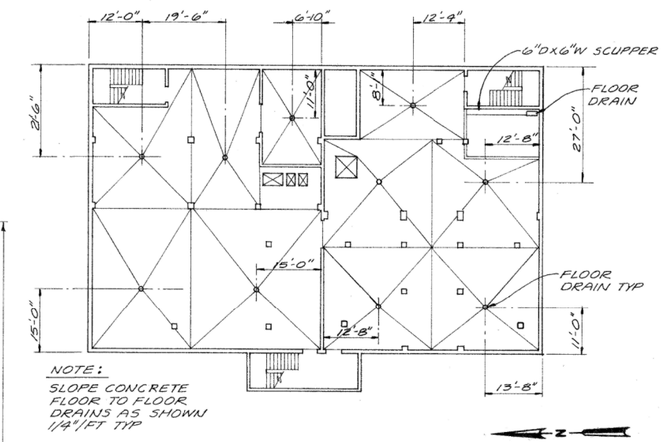

NOTE:
SLOPE CONCRETE FLOOR TO FLOOR DRAINS AS SHOWN 1/4"/FT TYP

FLOOR DRAIN LOCATION - PLAN

1/16" = 1'-0"

RECORD DRAWINGS

Revisions Drawn by RKS Date JUNE 1, 1990

THESE RECORD DRAWINGS HAVE BEEN PREPARED, IN PART, ON THE BASIS OF INFORMATION COMPILED BY OTHERS. THEY ARE NOT INTENDED TO REPRESENT IN DETAIL THE EXACT LOCATION, TYPE OF COMPONENT NOR MANNER OF CONSTRUCTION. THE ENGINEER WILL NOT BE RESPONSIBLE FOR ANY ERRORS OR OMISSIONS WHICH HAVE BEEN INCORPORATED INTO THE RECORD DRAWINGS.

NOTES:

1. DESIGN CRITERIA:
   SOUTHERN STANDARD BUILDING CODE, 1982 EDITION

   LIVE LOADS:

WIND	140 MPH
ROOF	30 PSF
EL 26.50	200 PSF
EL 13.00	200 PSF
SAND STORAGE	300 PSF
FORKLIFT	3000 LB CAPACITY
LOADING DOCKS	250 PSF
EL 0.50	200 PSF
INCINERATOR	200 KIPS
ASH THICKENER	110 KIPS
ELECTRICAL & CONTROL RMS.	300 PSF
OTHER	100 PSF
ASH LOADOUT DRIVE	200 PSF OR H20
MONORAIL	2 TON
BRIDGE CRANE	5 TON

2. NOT ALL WALL AND SLAB PENETRATIONS ARE SHOWN. VERIFY W/ ARCHITECTURAL HVAC, ELECTRICAL, MECHANICAL AND PLUMBING
3. TOP OF PILE CAPS AND FOUNDATION AT EL 0.50, TYPICAL UNLESS NOTED OTHERWISE ON PLANS OR SECTIONS. SEE PILE CAP DETAIL 2 / 10-S-12
4. SEE GENERAL STRUCTURAL NOTES 20A
5. T.O. DOORWAY OPENINGS SHALL BE 7'-2 1/4" ABOVE T.O. CONCRETE SLAB & 3'-3 1/4" WIDE EXCEPT AS OTHERWISE SHOWN
6. VERIFY EQUIPMENT PAD LOCATIONS WITH ELECTRICAL & MECANICAL DWGS, TYP. VERIFY SIZE WITH EQUIPMENT MFR. TYP
7. * VERIFY DIMENSIONS W/ EQUIPMENT MFR PRIOR TO CONSTRUCTION
8. INCINERATOR SYSTEM SUPPLIER SHALL PROVIDE ANCHORAGE SUCH THAT THE TOTAL LOADS ARE UNIFORMLY DISTRIBUTED OVER A MINIMUM OF 120 SQUARE FEET.
9. SUPPORT LEGS PROVIDED BY INCINERATOR SYSTEM SUPPLIER AND SHALL LIE ON A 14'-0" ± 6" DIAMETER, UNLESS OTHERWISE APPROVED BY THE ENGINEER.
10. CONCRETE FLOOR SLAB EL 0.50 SHALL BE 12" THICK & REINFORCED AS SHOWN ON PLAN OR SECTIONS.
11. PLACE 2-#5 BARS @ WALL ENDS & @ EDGE OF DISCONTINUOUS SLABS
12. FOR SPECIAL REINFORCING ABOVE WALL OPENINGS SEE 4 / 10-S-13 & 5 / 10-S-13
13. FOR SPECIAL REINFORCING OF WALL PIERS LESS THAN 3'-6" IN WIDTH, SEE 6 / 10-S-13
14. NO BACKFILL SHALL BE PLACED AGAINST BASEMENT WALLS UNTIL THE SLAB @ ELEVATION 13.00 HAS OBTAINED THE DESIGN STRENGTH

NO.	DATE	REVISION	BY	APVD

DSGN	DR	CHK	APVD
D LANGE	S PASTEUR	D GARCIA	D LANGE

©CH2M HILL 2015. ALL RIGHTS RESERVED.
REUSE OF DOCUMENTS: THIS DOCUMENT, AND THE IDEAS AND DESIGNS INCORPORATED HEREIN, AS AN INSTRUMENT OF PROFESSIONAL SERVICE, IS THE PROPERTY OF CH2M HILL AND IS NOT TO BE USED, IN WHOLE OR IN PART, FOR ANY OTHER PROJECT WITHOUT THE WRITTEN AUTHORIZATION OF CH2M HILL.

3011 S.W. WILLISTON ROAD
GAINESVILLE, FLORIDA 32608
EB0000072 AAC001992
Delayne Lange PE 70194

SWR CONCRETE REPAIRS
RICHARD A. HEYMAN
ENVIRONMENTAL PROTECTION FACILITY
AND FLEMING KEY BRIDGE

CITY OF KEY WEST
KEY WEST, FLORIDA

CH2MHILL®

STRUCTURAL
SOLIDS BUILDING AND INCINERATOR
STRUCTURAL
FOUNDATION PLAN

VERIFY SCALE
BAR IS ONE INCH ON ORIGINAL DRAWING.
0 1"

DATE	AUGUST 2015
PROJ	486025
DWG	R-12
SHEET	16 of 37

BID DOCUMENTS

RECORD DRAWINGS

Revisions Drawn by AFS Date JUNE 1, 1990

THESE RECORD DRAWINGS HAVE BEEN PREPARED, IN PART, ON THE BASIS OF INFORMATION COMPILED BY OTHERS. THEY ARE NOT INTENDED TO REPRESENT IN DETAIL THE EXACT LOCATION, TYPE OF COMPONENT NOR MANNER OF CONSTRUCTION. THE ENGINEER WILL NOT BE RESPONSIBLE FOR ANY ERRORS OR OMISSIONS WHICH HAVE BEEN INCORPORATED INTO THE RECORD DRAWINGS.

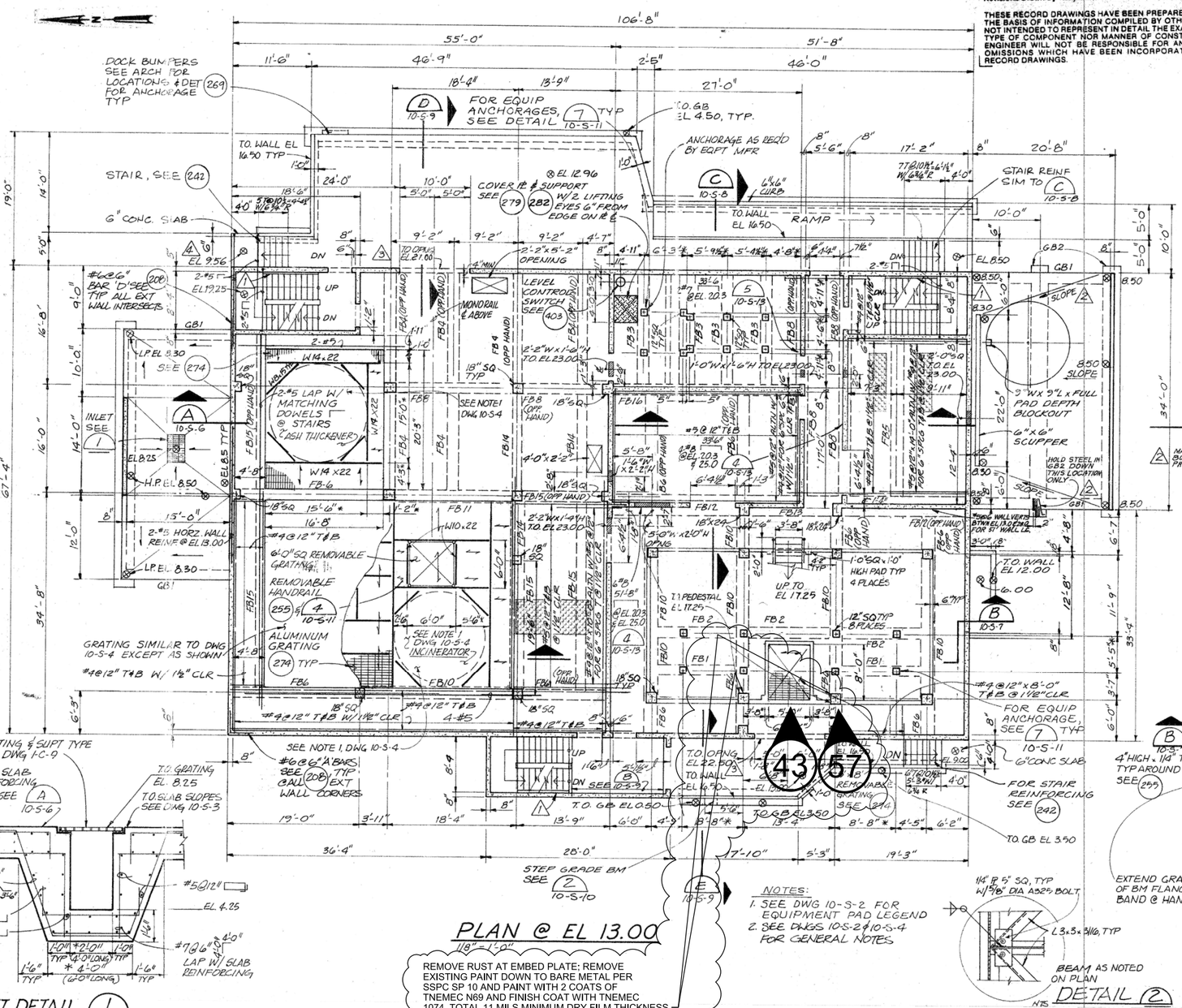

PLAN @ EL 13.00

1/8" = 1'-0"

REMOVE RUST AT EMBED PLATE; REMOVE EXISTING PAINT DOWN TO BARE METAL PER SSPC SP 10 AND PAINT WITH 2 COATS OF TNEMEC N69 AND FINISH COAT WITH TNEMEC 1074, TOTAL 11 MILS MINIMUM DRY FILM THICKNESS

NOTES:
1. SEE DWG 10-S-2 FOR EQUIPMENT PAD LEGEND
2. SEE DWGS 10-S-2 & 10-S-4 FOR GENERAL NOTES

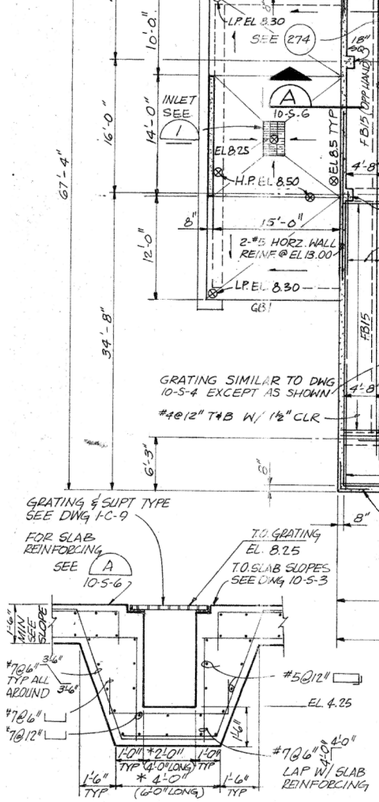

INLET DETAIL 1

3/8" = 1'-0"

NOTE: * VERIFY DIMENISON W/ TYPE 'F' INLET, SEE DWG 1-C-9

DETAIL 2

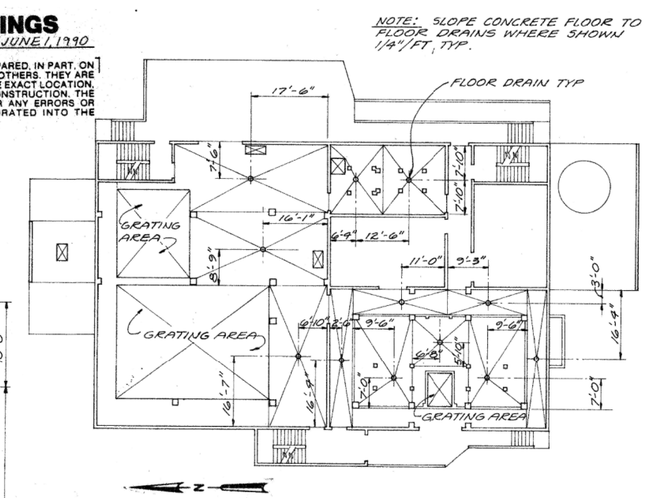

FLOOR DRAIN LOCATION – PLAN

1/16" = 1'-0"

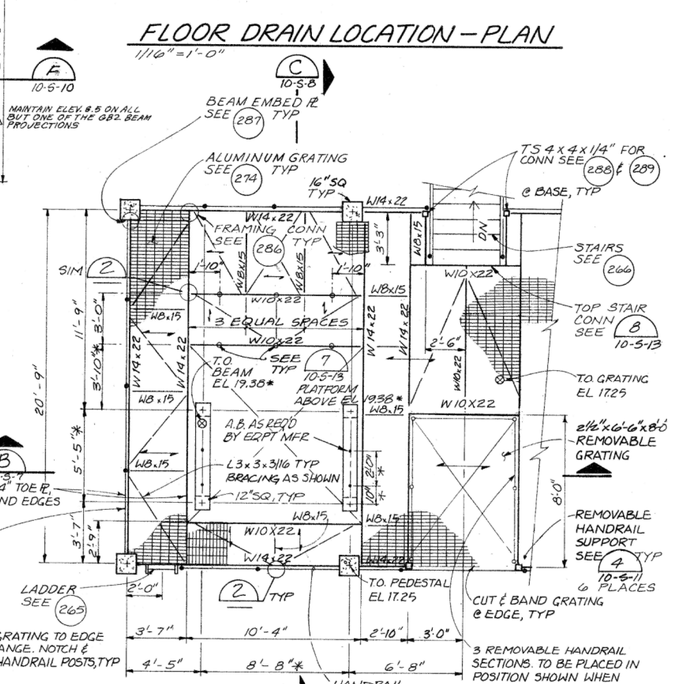

PLAN @ EL 17.25

1/4" = 1'-0"

NO.	DATE	REVISION	BY	APVD

DSGN D LANGE | DR S PASTEUR | CHK D GARCIA | APVD D LANGE

CH2MHILL®
3011 S.W. WILLISTON ROAD
GAINESVILLE, FLORIDA 32608
EB0000072 AAC001992
Delayne Lange, PE 70194

SWR CONCRETE REPAIRS
RICHARD A. HEYMAN
ENVIRONMENTAL PROTECTION FACILITY
AND FLEMING KEY BRIDGE

CITY OF KEY WEST
KEY WEST, FLORIDA

STRUCTURAL

SOLIDS BUILDING AND INCINERATOR STRUCTURAL PLAN AT ELEVATION 13.00

REUSE OF DOCUMENTS: THIS DOCUMENT, AND THE IDEAS AND DESIGNS INCORPORATED HEREIN, AS AN INSTRUMENT OF PROFESSIONAL SERVICE IS THE PROPERTY OF CH2M HILL AND IS NOT TO BE USED, IN WHOLE OR IN PART, FOR ANY OTHER PROJECT WITHOUT THE WRITTEN AUTHORIZATION OF CH2M HILL.

©CH2M HILL 2015. ALL RIGHTS RESERVED.

VERIFY SCALE
BAR IS ONE INCH ON ORIGINAL DRAWING.
0 1"

DATE	AUGUST 2015
PROJ	486025
DWG	R-13
SHEET	17 of 37

BID DOCUMENTS

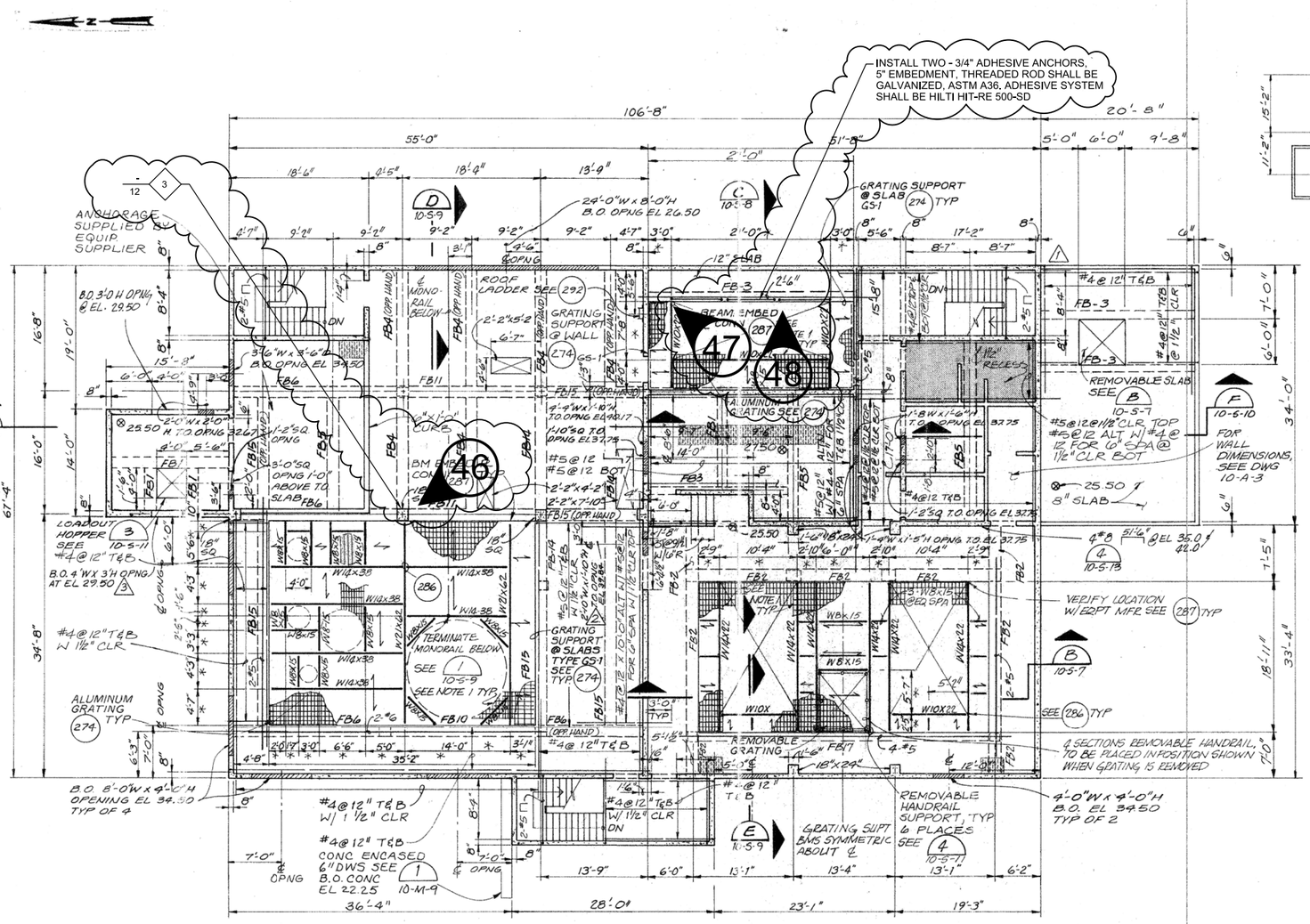

PLAN AT EL 25.50

1/8"=1'-0"

NOTE:
SEE DWG 10-S-2 FOR EQUIPMENT PAD LEGEND

RECORD DRAWINGS

Revisions Drawn by AFJ Date JUNE 1, 1990

THESE RECORD DRAWINGS HAVE BEEN PREPARED, IN PART, ON THE BASIS OF INFORMATION COMPILED BY OTHERS. THEY ARE NOT INTENDED TO REPRESENT IN DETAIL THE EXACT LOCATION, TYPE OF COMPONENT NOR MANNER OF CONSTRUCTION. THE ENGINEER WILL NOT BE RESPONSIBLE FOR ANY ERRORS OR OMISSIONS WHICH HAVE BEEN INCORPORATED INTO THE RECORD DRAWINGS.

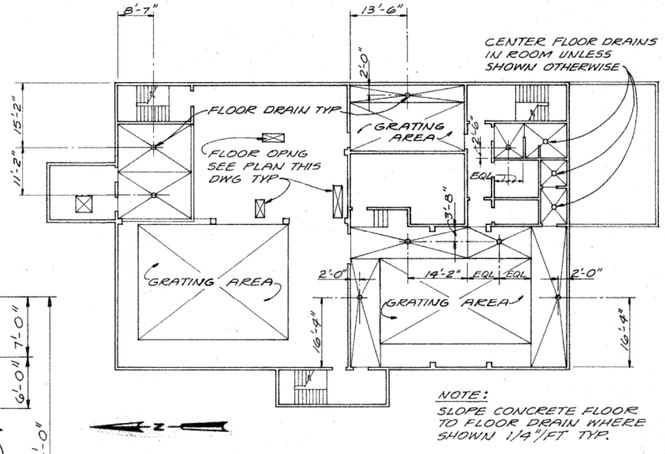

FLOOR DRAIN LOCATION - PLAN

1/16"=1'-0"

NOTES:

1. CONTRACTOR TO DETERMINE PROJECTION OF GRATING BEYOND SUPPORTS TO PROVIDE 3" CLEAR TO EQUIPMENT. CUT AND BAND GRATING AND PROVIDE 3"H x 1/4 CONT. TOE ETC.
2. * VERIFY DIMENSIONS WITH EQUIPMENT MFR PRIOR TO CONSTRUCTION.
3. ALL REINFORCED CONCRETE SLABS ON DWGS 10-S-3 & 10-S-4 SHALL BE MINIMUM 8" THICK AT FLOOR DRAINS OR LOW PTS. TOP REINFORCING MAT TO BE PARALLEL WITH BOTTOM MAT. CLEARANCE FOR BOTTOM REINF AND MINIMUM CLEARANCE FOR TOP REINF SHALL BE PER GENERAL STRUCTURAL NOTES (204). WHEN NOT SHOWN ON PLANS OR SECTIONS, REINFORCING SHALL BE PER GENERAL STRUCTURAL NOTES (204).
4. SEE NOTES DWG 10-S-2.

NO.	DATE	REVISION	BY	APVD

DSGN D LANGE | DR S PASTEUR | CHK D GARCIA | APVD D LANGE

3011 S.W. WILLISTON ROAD
GAINESVILLE, FLORIDA 32608
EB0000072 AAC001992
Delayne Lange PE 70194

SWR CONCRETE REPAIRS
RICHARD A. HEYMAN
ENVIRONMENTAL PROTECTION FACILITY
AND FLEMING KEY BRIDGE

CITY OF KEY WEST
KEY WEST, FLORIDA

REUSE OF DOCUMENTS: THIS DOCUMENT, AND THE IDEAS AND DESIGNS INCORPORATED HEREIN, AS AN INSTRUMENT OF PROFESSIONAL SERVICE, IS THE PROPERTY OF CH2M HILL AND IS NOT TO BE USED, IN WHOLE OR IN PART, FOR ANY OTHER PROJECT WITHOUT THE WRITTEN AUTHORIZATION OF CH2M HILL.
©CH2M HILL 2015. ALL RIGHTS RESERVED.

CH2MHILL®

STRUCTURAL

SOLIDS BUILDING AND INCINERATOR
STRUCTURAL
PLAN AT ELEVATION 25.50

VERIFY SCALE
BAR IS ONE INCH ON ORIGINAL DRAWING.
0 1"

DATE	AUGUST 2015
PROJ	486025
DWG	R-14
SHEET	18 of 37

BID DOCUMENTS

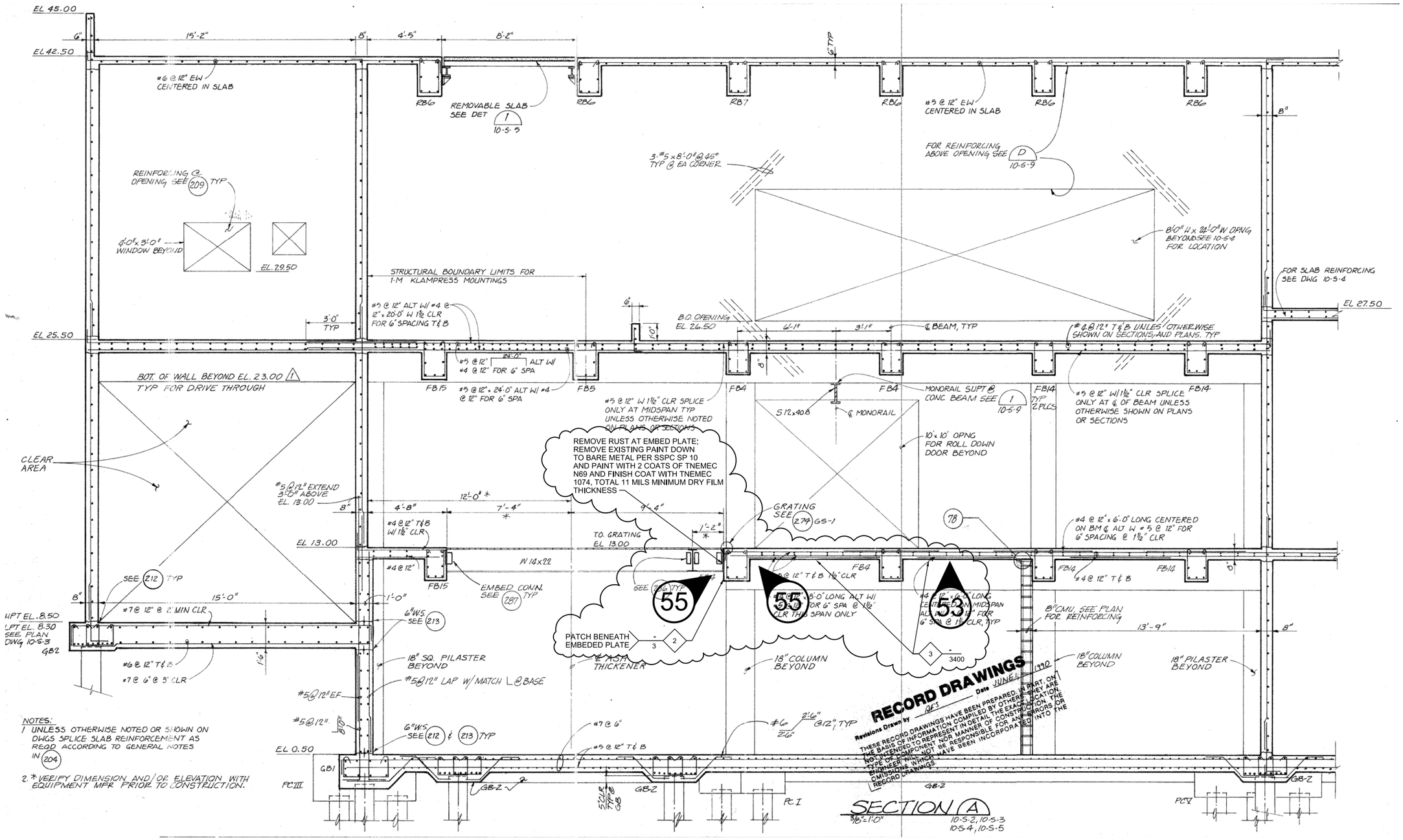

NOTES:

1. UNLESS OTHERWISE NOTED OR SHOWN ON DWGS SPLICE SLAB REINFORCEMENT AS REQD ACCORDING TO GENERAL NOTES IN 204
2. * VERIFY DIMENSION AND/OR ELEVATION WITH EQUIPMENT MFR PRIOR TO CONSTRUCTION.

NO.	DATE	REVISION	BY	APVD

DSGN D LANGE | DR D LANGE | CHK S PASTEUR | APVD D GARCIA | BY D LANGE | APVD

3011 S.W. WILLISTON ROAD
GAINESVILLE, FLORIDA 32608
EB0000072 AAC001992
Delayne Lange PE 70194

SWR CONCRETE REPAIRS
RICHARD A. HEYMAN
ENVIRONMENTAL PROTECTION FACILITY AND FLEMING KEY BRIDGE

CITY OF KEY WEST
KEY WEST, FLORIDA

CH2MHILL®

STRUCTURAL

SOLIDS BUILDING AND INCINERATOR STRUCTURAL SECTION

REUSE OF DOCUMENTS: THIS DOCUMENT, AND THE IDEAS AND DESIGNS INCORPORATED HEREIN, AS AN INSTRUMENT OF PROFESSIONAL SERVICE, IS THE PROPERTY OF CH2M HILL AND IS NOT TO BE USED, IN WHOLE OR IN PART, FOR ANY OTHER PROJECT WITHOUT THE WRITTEN AUTHORIZATION OF CH2M HILL.

©CH2M HILL 2015. ALL RIGHTS RESERVED.

VERIFY SCALE
BAR IS ONE INCH ON ORIGINAL DRAWING.
0 1"

DATE	AUGUST 2015
PROJ	486025
DWG	R-15
SHEET	19 of 37

BID DOCUMENTS

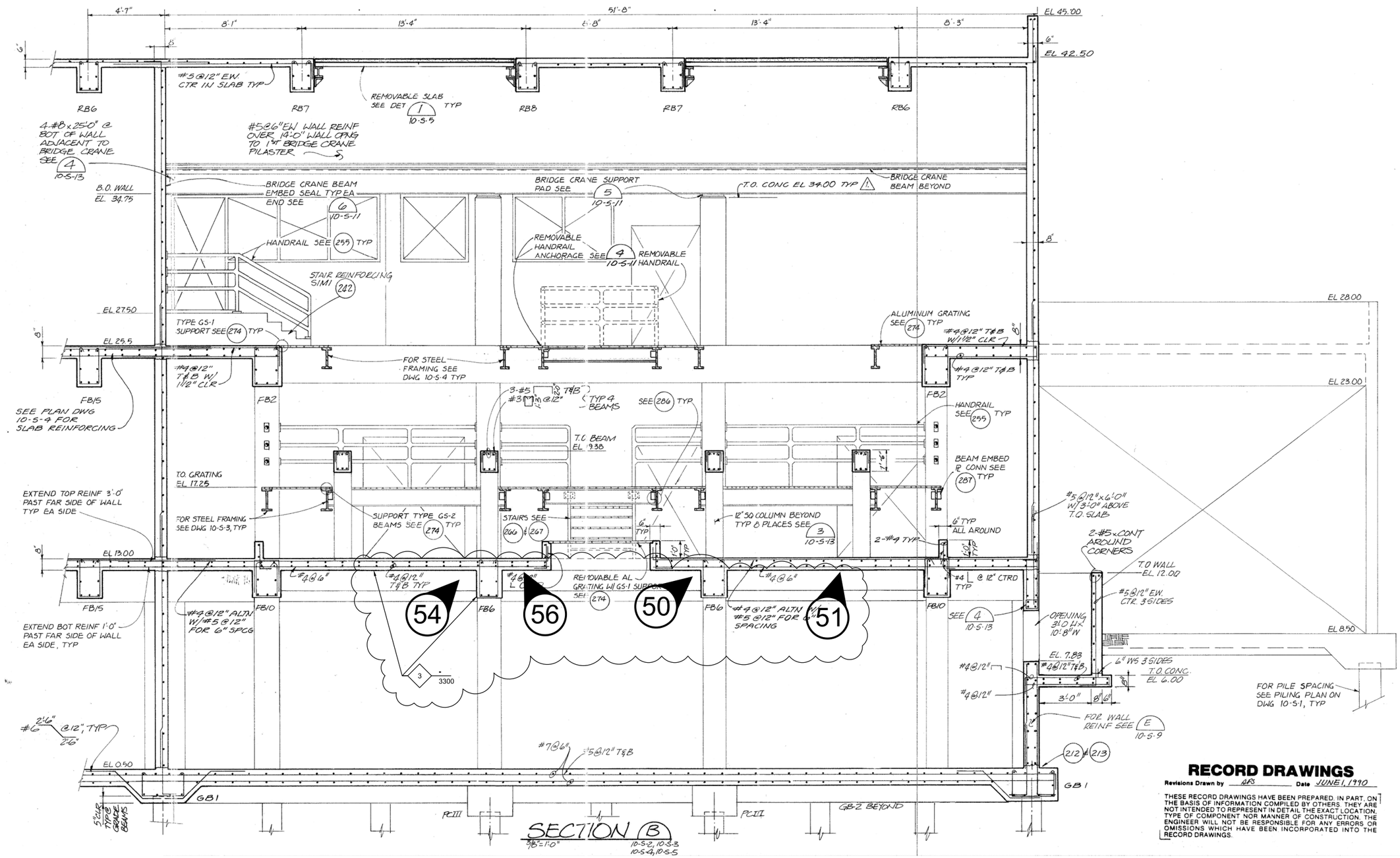

RECORD DRAWINGS

Revisions Drawn by RFS Date JUNE 1, 1990

THESE RECORD DRAWINGS HAVE BEEN PREPARED, IN PART, ON THE BASIS OF INFORMATION COMPILED BY OTHERS. THEY ARE NOT INTENDED TO REPRESENT IN DETAIL THE EXACT LOCATION, TYPE OF COMPONENT NOR MANNER OF CONSTRUCTION. THE ENGINEER WILL NOT BE RESPONSIBLE FOR ANY ERRORS OR OMISSIONS WHICH HAVE BEEN INCORPORATED INTO THE RECORD DRAWINGS.

NO.	DATE	REVISION	BY	APVD

DSGN D LANGE	DR S PASTEUR	CHK D GARCIA	APVD D LANGE

CH2MHILL®

3011 S.W. WILLISTON ROAD
GAINESVILLE, FLORIDA 32608
EB0000072 AAC001992
Delayne Lange PE 70194

SWR CONCRETE REPAIRS
RICHARD A. HEYMAN
ENVIRONMENTAL PROTECTION FACILITY
AND FLEMING KEY BRIDGE

CITY OF KEY WEST
KEY WEST, FLORIDA

STRUCTURAL

SOLIDS BUILDING AND INCINERATOR STRUCTURAL SECTION

REUSE OF DOCUMENTS: THIS DOCUMENT, AND THE IDEAS AND DESIGNS INCORPORATED HEREIN, AS AN INSTRUMENT OF PROFESSIONAL SERVICE, IS THE PROPERTY OF CH2M HILL AND IS NOT TO BE USED, IN WHOLE OR IN PART, FOR ANY OTHER PROJECT WITHOUT THE WRITTEN AUTHORIZATION OF CH2M HILL.

©CH2M HILL 2015. ALL RIGHTS RESERVED.

VERIFY SCALE
BAR IS ONE INCH ON ORIGINAL DRAWING.
0 1"

DATE	AUGUST 2015
PROJ	486025
DWG	R-16
SHEET	20 of 37

BID DOCUMENTS

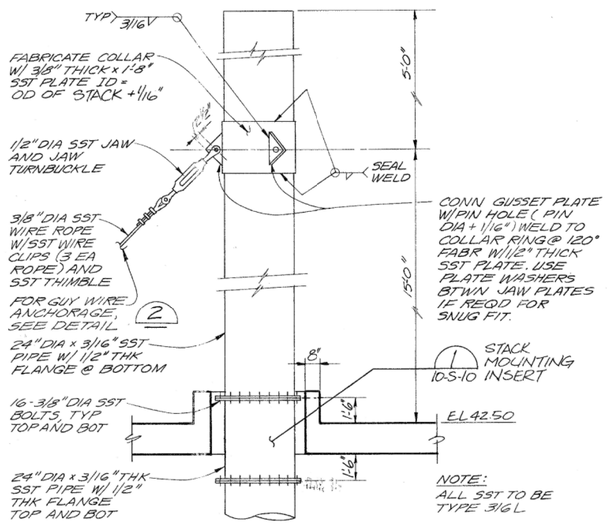

EXHAUST STACK DETAIL (1)
NTS 10-S-5

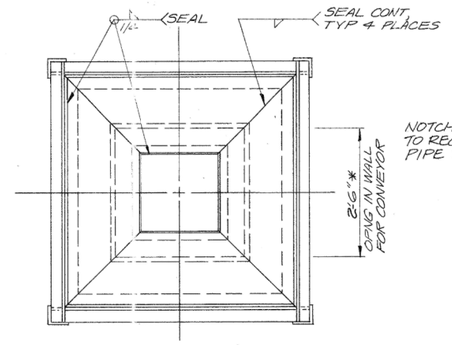

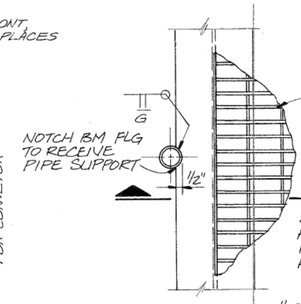

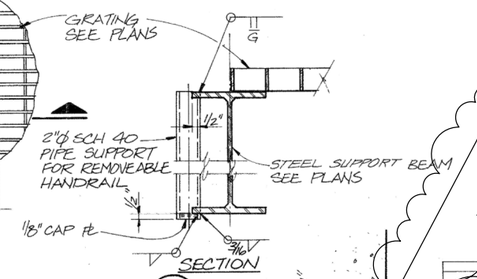

DETAIL (4)
NTS 10-S-7

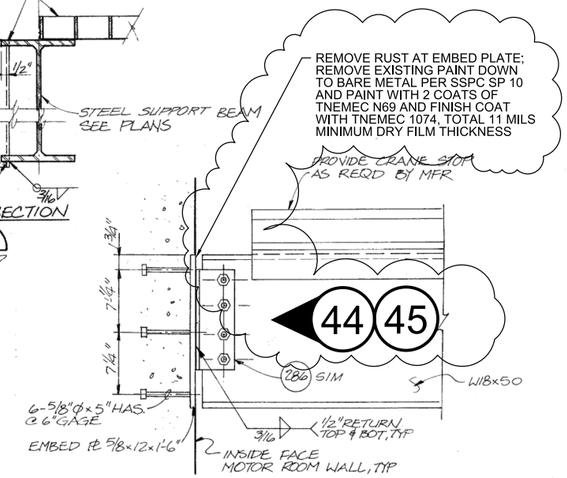

CRANE RAIL END CONN (6)
1 1/2" = 1'-0" 10-S-7

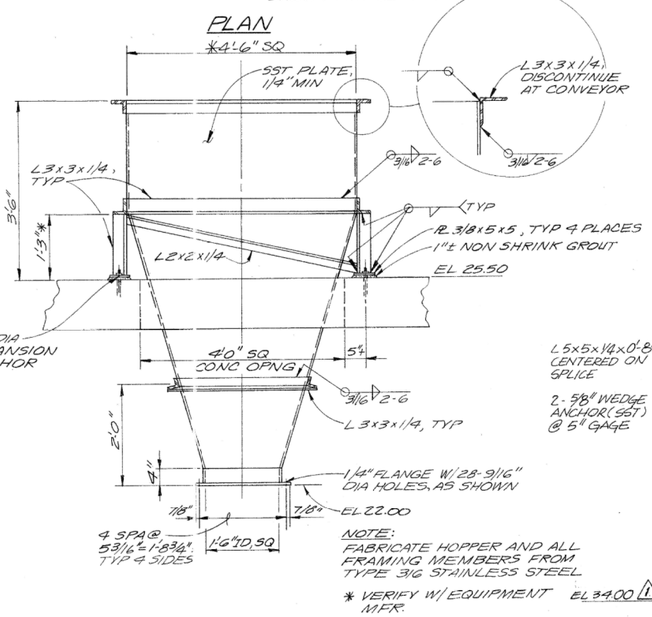

ASH HOPPER DETAIL (3)
3/4" = 1'-0" 10-S-4

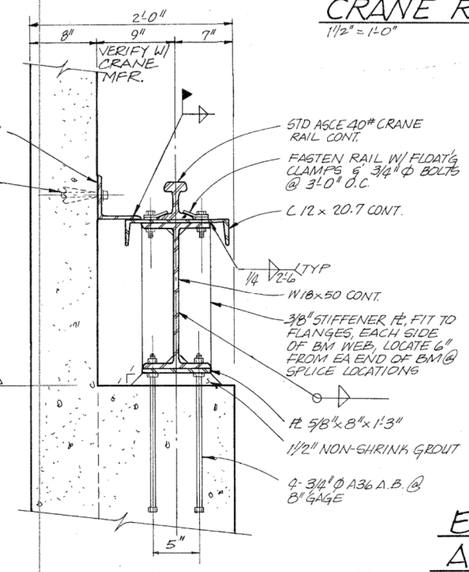

BRIDGE CRANE SUPPORT (5)
1 1/2" = 1'-0" 10-S-7 10-S-9

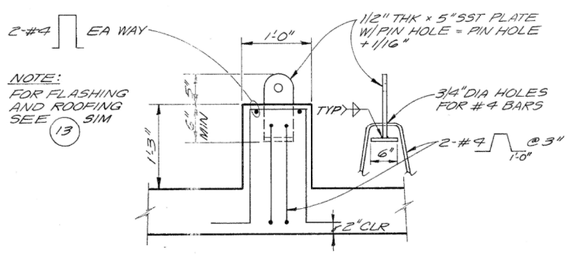

GUY WIRE ANCHORAGE DETAIL (2)
1" = 1'-0" 10-S-5

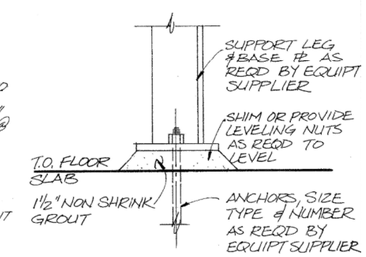

EQUIPMENT LEG ANCHORAGE (7)
NTS 10-M-5 10-S-3

RECORD DRAWINGS
Revisions Drawn by AFS Date JUNE 1, 1990
THESE RECORD DRAWINGS HAVE BEEN PREPARED, IN PART, ON THE BASIS OF INFORMATION COMPILED BY OTHERS. THEY ARE NOT INTENDED TO REPRESENT IN DETAIL THE EXACT LOCATION, TYPE OF COMPONENT NOR MANNER OF CONSTRUCTION. THE ENGINEER WILL NOT BE RESPONSIBLE FOR ANY ERRORS OR OMISSIONS WHICH HAVE BEEN INCORPORATED INTO THE RECORD DRAWINGS.

NO.	DATE	REVISION	BY	APVD

DSGN D LANGE | DR S PASTEUR | CHK D GARCIA | APVD D LANGE

CH2MHILL®
3011 S.W. WILLISTON ROAD
GAINESVILLE, FLORIDA 32608
EB0000072 AAC001992
Delayne Lange, PE 70194

SWR CONCRETE REPAIRS
RICHARD A. HEYMAN ENVIRONMENTAL PROTECTION FACILITY AND FLEMING KEY BRIDGE
CITY OF KEY WEST
KEY WEST, FLORIDA

STRUCTURAL
SOLIDS BUILDING AND INCINERATOR STRUCTURAL DETAILS

REUSE OF DOCUMENTS: THIS DOCUMENT, AND THE IDEAS AND DESIGNS INCORPORATED HEREIN, AS AN INSTRUMENT OF PROFESSIONAL SERVICE, IS THE PROPERTY OF CH2M HILL AND IS NOT TO BE USED, IN WHOLE OR IN PART, FOR ANY OTHER PROJECT WITHOUT THE WRITTEN AUTHORIZATION OF CH2M HILL.
©CH2M HILL 2015. ALL RIGHTS RESERVED.

VERIFY SCALE
BAR IS ONE INCH ON ORIGINAL DRAWING.
0 1"

DATE	AUGUST 2015
PROJ	486025
DWG	R-17
SHEET	21 of 37

BID DOCUMENTS

NOMINAL BEAM DEPTH, INCHES	ROWS OF BOLTS	LENGTH (3) OF ANGLE
36	7	1'-8½"
30-33	6	1'-5½"
24-27	5	1'-2½"
16-21	4	11½"
12-15	3	8½"
8-10	2	5½"
6	1	3"

NOTES:
1. NUMBER OF ROWS IS EQUAL TO NUMBER OF BOLTS TO ENCLOSED WEB.
2. ALL FRAMING CONNECTIONS SHALL CONFORM TO SCHEDULE UNLESS DETAILED OTHERWISE ON FRAMING PLANS.
3. ADD 1½" TO ANGLE LENGTH FOR STAGGERED BOLT CONNECTIONS.

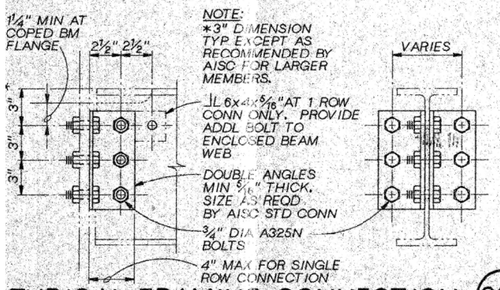

NOTE:
*3" DIMENSION TYP EXCEPT AS RECOMMENDED BY AISC FOR LARGER MEMBERS.

TYPICAL FRAMING CONNECTION (286)
NTS

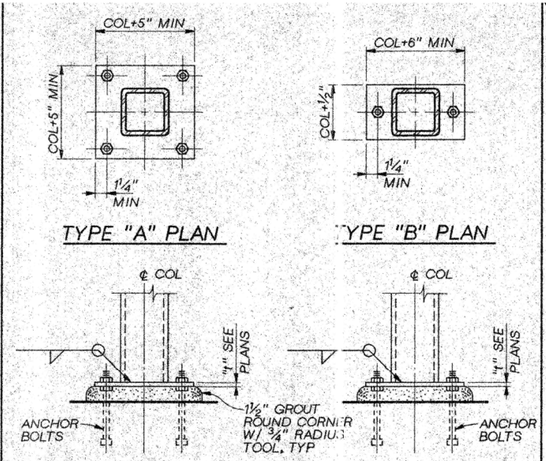

NOTES:
1. ANCHOR BOLTS SHALL BE ¾" DIA x 1'-0" LST W/ LEVELING NUTS UNLESS OTHERWISE SHOWN.
2. GROUT SHALL BE NONSHRINK AS PER SPECIFICATIONS, FLOWABLE.

TUBE COLUMN BASE (289)
NTS

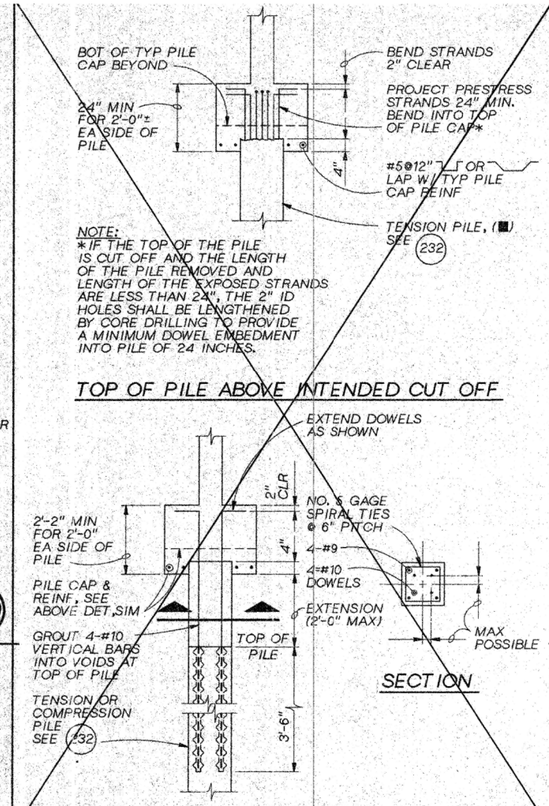

NOTE:
*IF THE TOP OF THE PILE IS CUT OFF AND THE LENGTH OF THE PILE REMOVED AND LENGTH OF THE EXPOSED STRANDS ARE LESS THAN 24", THE 2" ID HOLES SHALL BE LENGTHENED BY CORE DRILLING TO PROVIDE A MINIMUM DOWEL EMBEDMENT INTO PILE OF 24 INCHES.

TOP OF PILE ABOVE INTENDED CUT OFF

TOP OF PILE BELOW INTENDED PILE CUT OFF

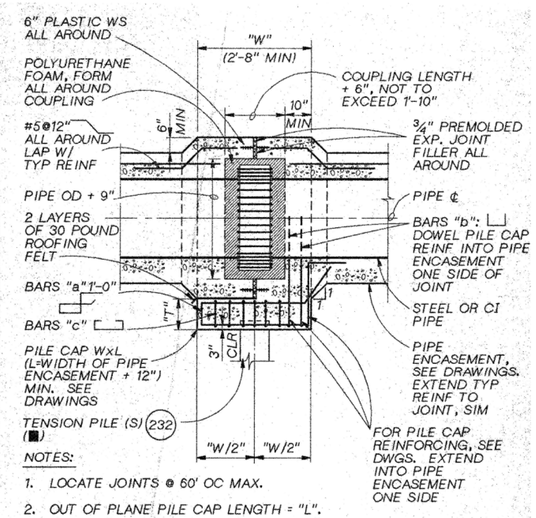

NOTES:
1. LOCATE JOINTS @ 60' OC MAX.
2. OUT OF PLANE PILE CAP LENGTH = "L".

PIPE ENCASEMENT EXPANSION JOINT (297)
NTS

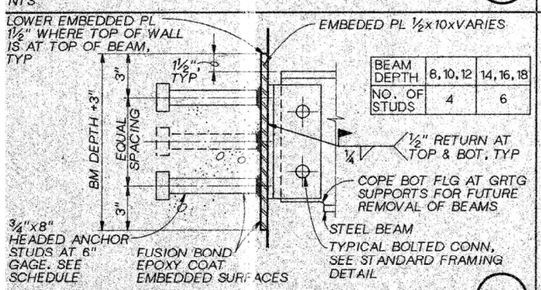

BEAM DEPTH	8, 10, 12	14, 16, 18
NO. OF STUDS	4	6

EMBEDDED CONNECTION (287)
NTS

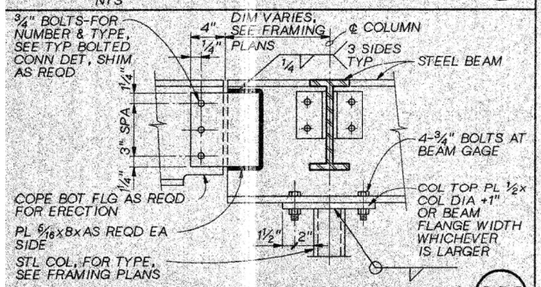

BEAM COLUMN CONNECTION (288)
NTS

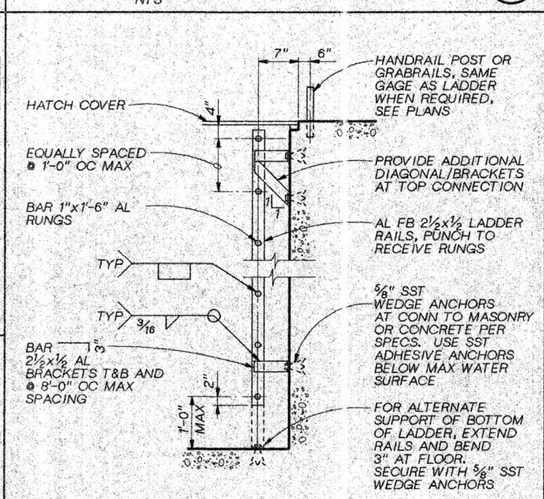

NOTE:
PROVIDE PROTECTION FOR DISSIMILAR METALS AND CONCRETE PER SPECIFICATIONS.

LADDER (292)
NTS

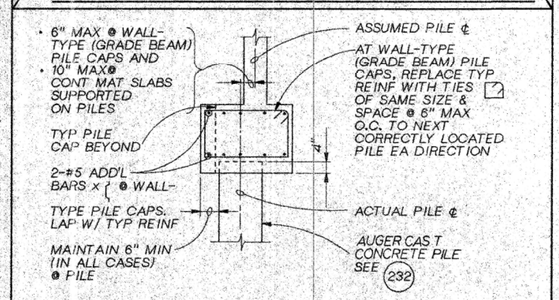

NOTE:
REINFORCING AND DIMENSIONS ASSUME THAT PILE ℄ IS WITHIN 4 INCHES OF THE HORIZONTAL ℄ OF THE PILE CAP. IF THE PILE IS LOCTED 8" OR 12" AS NOTED ABOVE, BEYOND THE PILE CAP ℄, MODIFY THE REINFORCING AS SHOWN. IF THE PILE LOCATION EXCEEDS THESE TOLERANCES, ABANDON THE PILE AND INSTALL A NEW PILE AT A LOCATION ACCEPTABLE TO THE ENGINEER.

PILE MISALIGNMENT
PILE DETAILS (296)
NTS

RECORD DRAWINGS
Revisions Drawn By JES Date JUNE 90
THESE RECORD DRAWINGS HAVE BEEN PREPARED, IN PART, ON THE BASIS OF INFORMATION COMPILED BY OTHERS. THEY ARE NOT INTENDED TO REPRESENT IN DETAIL OR EXACT LOCATION, TYPE OF COMPONENT NOR MANNER IN WHICH THE CONSTRUCTION ENGINEER WILL NOT BE RESPONSIBLE FOR ANY ERRORS OR OMISSIONS WHICH HAVE BEEN INCORPORATED INTO THE RECORD DRAWINGS

NO.	DATE	REVISION	BY	APVD

DSGN	DR	CHK	APVD
D LANGE	S PASTEUR	D GARCIA	D LANGE

CH2MHILL®
3011 S.W. WILLISTON ROAD
GAINESVILLE, FLORIDA 32608
EB0000072 AAC001992
Delayne Lange PE 70194

SWR CONCRETE REPAIRS
RICHARD A. HEYMAN
ENVIRONMENTAL PROTECTION FACILITY AND FLEMING KEY BRIDGE

CITY OF KEY WEST
KEY WEST, FLORIDA

STRUCTURAL

STANDARD DETAILS

REUSE OF DOCUMENTS: THIS DOCUMENT, AND THE IDEAS AND DESIGNS INCORPORATED HEREIN, AS AN INSTRUMENT OF PROFESSIONAL SERVICE, IS THE PROPERTY OF CH2M HILL AND IS NOT TO BE USED, IN WHOLE OR IN PART, FOR ANY OTHER PROJECT WITHOUT THE WRITTEN AUTHORIZATION OF CH2M HILL.
©CH2M HILL 2015. ALL RIGHTS RESERVED.

VERIFY SCALE
BAR IS ONE INCH ON ORIGINAL DRAWING.
0 1"

DATE	AUGUST 2015
PROJ	486025
DWG	R-18
SHEET	22 of 37

BID DOCUMENTS