CONTRACT DOCUMENTS FOR:

GENERAL UTILITIES SERVICES

ITB # 15-021

JULY 2015

MAYOR: CRAIG CATES

COMMISSIONERS:

TERRY JOHNSTON

CLAYTON LOPEZ

BILLY WARDLOW

JIMMY WEEKLEY

MARK ROSSI

TONY YANIZ

PREPARED BY
ENGINEERING SERVICES

CITY OF KEY WEST

KEY WEST, FLORIDA

CONTRACT DOCUMENTS

For

GENERAL UTILITIES SERVICES

ITB # 15-021

****

CONSISTING OF:
BIDDING REQUIREMENTS
CONTRACT FORMS
CONDITIONS OF THE CONTRACT
SPECIFICATIONS
DRAWINGS

****

CONTENTS

PART 1 - BIDDING REQUIREMENTS Page

INVITATION TO BID 4
INSTRUCTIONS TO BIDDERS 6
PROPOSAL 14
FLORIDA BID BOND 42
ANTI-KICKBACK AFFIDAVIT 44
PUBLIC ENTITIES CRIME FORM 45
CITY OF KEY WEST INDEMNIFICATION 48
LOCAL VENDOR FORM 49
DOMESTIC PARTNERSHIP 50
CONE OF SILENCE 51
BIDDER'S CHECKLIST 52

PART 2 - CONTRACT FORMS

CONTRACT 53
PERFORMANCE BOND 55
PAYMENT BOND 57

PART 3 - CONDITIONS OF THE CONTRACT

GENERAL CONDITIONS 39
SUPPLEMENTARY CONDITIONS 59

PART 4 - SPECIFICATIONS

DIVISION 1 - GENERAL REQUIREMENTS

01001 GENERAL REQUIREMENTS 93
01014 ENVIRONMENTAL PROTECTION 106
01025 MEASUREMENT & PAYMENT 108
01500 TESTING SERVICES 121

DIVISION 2 - SITE WORK

02221 TRENCH EXCAVATION AND BACKFILL 123
02246 SILT SCREEN 132
02575 SURFACE RESTORATION 133
02721 CATCH BASINS AND INLETS 144
02724 STORM DRAIN 147
02726 MANHOLE AND MISCELLANEOUS CONCRETE CONSTRUCTION 155
02732 SEWER SERVICE CONNECTIONS 170
02731 ROADWAY SIGNS 176
02900 GENERAL TREE PLANTING AND MAINTENANCE 179
02925 GRADING & GRASSING 182
02930 SEEPAGE TRENCH 185

DIVISION 3 –CONCRETE

03001 CAST IN PLACE CONCRETE 187
03002 CONCRETE PLACEMENT, CURBS & SIDEWALKS 191

DIVISION 13 - SPECIAL CONSTRUCTION

13510 CLEANING OF EXISTING SANITARY SEWERS 199

DIVISION 15 - MECHANICAL

15085 GRAVITY AND PRESSURE PIPE 202
15102 MANUALLY OPERATED VALVES AND CHECK VALVES 213

PART 5 - DRAWINGS

TITLE	DETAIL NO.
PRECAST MANHOLE	1
STANDARD MANHOLE FRAME AND COVER	2
LINED PRECAST MANHOLE	3
WATERTIGHT MANHOLE FRAME AND COVER	4
CONFLICT MANHOLE	5
FLAT TOP MANHOLE	6
SEWER STUBOUTS IN MANHOLES	7
DROP MANHOLE ASSEMBLY	8
JOINT DETAIL	9
CATCH BASIN	10
CURB INLET – TYPES 5 AND 6	11
TYPICAL SERVICE CONNECTIONS	12
JOINT FOR DISSIMILAR GRAVITY SEWER PIPE	13
THRUST BLOCKS	14
ENCASEMENTS	15
ENCASEMENT ALTERNATE FOR SEWER LATERALS	16
SLEEVE FOR STORM SEWER CONFLICTS	17
FRENCH DRAIN	18
BURIED PLUG VALVE SETTING	19
ASPHALT UTILITY TRENCH	20
REPAIRS FOR ASPHALT TRENCH	21
ASPHALT SURFACE RESTORATION TRENCH	22
EXFILTRATION TRENCH	23
SEEPAGE TRENCH	24
SWALE RESTORATION	25
TYPICAL PALM PLANTING/STAKING	26
TYPICAL SIGN LOCATION	27

PART 1

BIDDING REQUIREMENTS

INVITATION TO BID

Sealed Bids addressed to the City of Key West (CITY), for Invitation to Bid (ITB) # 15-021 GENERAL UTILITY SERVICES CONTRACT will be received at the office of the Clerk of the City of Key West at 3126 Flagler Ave, Key West, Florida 33040, until 3:00 p.m., local time, on September 2, 2015 and then will be publicly opened and read. Any Bids received after the time and date specified will not be considered.

This contract is an indefinite quantities contract for needed construction and repairs. The project contemplated consists of items of work required for the repair and replacement of storm and sanitary sewer systems, paving, sidewalks and other miscellaneous municipal work for a contract time of three years with an option to extend for two years at the unit prices stated in the proposal plus CPI increases. The City of Key West will establish the locations and scope of work, as repair work becomes necessary. Work Order will identify the scope for each specific project.

One (1) original and two (2) USB drives in PDF format of the Bid are to be submitted in two sealed envelopes, one within the other, clearly marked on the outside "ITB #15-021: GENERAL UTILITIES SERVICES CONTRACT", and addressed to the City Clerk at the above address.

Drawings and Specifications may be obtained from Demand Star by Onvia and the City of Key West. Please contact Demand Star at www.demandstar.com or call 1-800-711-1712 and the City of Key West website at www.cityofkeywest-fl.gov.

EACH BID MUST BE SUBMITTED ON THE PRESCRIBED FORM AND ACCOMPANIED BY BID SECURITY AS PRESCRIBED IN THE INSTRUCTIONS TO BIDDERS, PAYABLE TO THE CITY OF KEY WEST, FLORIDA, IN AN AMOUNT NOT LESS THAN FIVE (5) PERCENT OF THE AMOUNT BID.

The successful Bidder will be required to furnish the necessary additional bond(s) for the faithful performance of the Contract, as Prescribed in the Bidding Documents. Within 10 days after the Notice of Award, the successful Bidder will also be required to furnish documentation showing that he is in compliance with the licensing requirements of the state and that the Provisions of Chapter 66 of the Code of Ordinances of the City of Key West. Compliance with these Provisions is required before the Contractor can enter into the agreement contained in the Contract Documents.

THE BIDDER MUST BE A LICENSED CONTRACTOR BY THE STATE OF FLORIDA AND SUBMIT PROOF OF SUCH WITH THE BID.

Specifically within 10 days the following the Notice of Award the successful bidder must demonstrate that he holds at a minimum, the following licenses & certificates;

A. City of Key West Business Tax License Receipt
B. A valid Certificate of Competency issued by the Chief Building Official of Key West

All bid bonds, contract bonds, insurance contracts, and certificates of insurance shall be either executed by or countersigned by a licensed resident agent of the Surety or Insurance Company having his place of business in the State of Florida, and in all ways complying with the insurance laws of the State of Florida. Further, the said Surety or Insurance Company shall be duly licensed and qualified to do business in the State of Florida.

Before a Contract will be awarded for the work contemplated herein, the OWNER will conduct such investigation as is necessary to determine the performance record and ability of the apparent low Bidder to perform the size and type of work specified under this Contract. Upon request, the Bidder shall submit such information as deemed necessary by the OWNER to evaluate the Bidder's qualifications.

For information concerning the proposed work or for an appointment to visit the site of the proposed work, contact Janet Muccino, Project Manager, @ (305) 809-3867.

At the time of the award, the successful Bidder must show satisfactory document of such State, County and City licenses as would be required. Any permit and/or license requirement and subsequent costs are located within the bid documents. The successful Bidder must also be able to satisfy the City Attorney as to such insurance coverage and legal requirements as may be demanded in Bid. The City may reject bids: (1) for budgetary reasons, (2) if the bidder misstates or conceals a material fact in its bid, (3) if the bid does not strictly conform to the law or is non-responsive to the bid requirements, (4) if the bid is conditional, (5) if a change of circumstances occurs making the purpose of the bid unnecessary, (6) or if such rejection is in the best interest of the City. The City may also waive any minor formalities or irregularities in any bid.

INSTRUCTIONS TO BIDDERS

1. CONTRACT DOCUMENTS

A. FORMAT

The Contract Documents are divided into parts, divisions, and sections for convenient organization and reference. Generally, there has been no attempt to divide the Specification sections into work performed by the various building trades, work by separate SUBCONTRACTORs, or work required for separate facilities in the project.

B. DOCUMENT INTERPRETATION

The separate sections contained within these Contract Documents are intended to be mutually cooperative and to provide all details reasonably required for the execution of the proposed work.

Should there be any doubt as to the meaning or intent of said Contract Documents, the Bidder should request of the ENGINEER, in writing (at least 10 working days prior to bid opening) an interpretation thereof. Any interpretation or change in said Contract Documents will be made only in writing in the form of Addenda to the Documents, which will be furnished to all registered holders of Contract Documents. Bidders shall submit with their Proposals, or indicate receipt of, all Addenda. The OWNER will not be responsible for any other explanation or interpretations of said Documents.

C. DRAWINGS

Details of construction are bound herein. Drawings and/or details applicable to each project will accompany each work order.

2. GENERAL DESCRIPTION OF THE PROJECT

A general description of the work to be done is contained in the Invitation to Bid. The scope is specified in applicable parts of these Contract Documents.

3. QUALIFICATION OF CONTRACTORS

The prospective Bidders must meet the statutorily prescribed requirements before award of Contract by the OWNER.

Bidders must hold or obtain all Licenses as required by Florida State Statutes in order to bid and perform the work specified herein.

4. BIDDER'S UNDERSTANDING

Each Bidder must inform himself of the conditions relating to the execution of the work, and it

is assumed that he will inspect the site and make himself thoroughly familiar with all the Contract Documents. Failure to do so will not relieve the successful Bidder of his obligation to enter into a Contract and complete the contemplated work in strict accordance with the Contract Documents. It shall be the Bidder's obligation to verify for himself and to his complete satisfaction all information concerning site and subsurface conditions.

The OWNER will make available to prospective Bidders upon request and at the office of the ENGINEER, prior to bid opening, any information that he may have as to subsurface conditions and surface topography at the worksite.

Investigations conducted by the ENGINEER of subsurface conditions were made for the purpose of study and design and neither the OWNER nor the ENGINEER assumes any responsibility whatever in respect to the sufficiency or accuracy of borings or of the logs of test borings or of other investigations that have been made or of the interpretations made thereof and there is no warranty or guarantee either expressed or implied that the conditions indicated by such investigations are representative of those existing throughout such area or any part thereof or that unforeseen developments may not occur.

Logs of test borings, geotechnical reports, or topographic maps showing a record of the data obtained by the ENGINEER's investigations of surface and subsurface conditions that are made available shall not be considered a part of the Contract Documents, said logs representing only the opinion of the ENGINEER as to the character of the materials encountered by him in his investigations and are available only for the convenience of the Bidders.

Information derived from inspection of logs of test borings, or pits, geotechnical reports, topographic maps, or from Drawings showing location of utilities and structures will not in any way relieve the CONTRACTOR from any risk, or from properly examining the site and making such additional investigations as he may elect or from properly fulfilling all the terms of the Contract Documents.

Each Bidder shall inform himself of, and the Bidder awarded a Contract shall comply with federal, state, and local laws, statutes, and ordinances relative to the execution of the work. This requirement includes, but is not limited to, applicable regulations concerning minimum wage rates, nondiscrimination in the employment of labor, protection of public and employee safety and health, environmental protection, the protection of natural resources, fire protection, burning and nonburning requirements, permits, fees, and similar subjects.

5. TYPE OF PROPOSAL

A. UNIT PRICE

The Proposal for the work is to be submitted on a unit price basis. Unit prices shall be submitted for all items of work set forth in the Proposal. All items required to complete the work specified or shown on the Drawings but not included in the Proposal shall be considered incidental to those set forth in the Proposal. Payment to the CONTRACTOR will be made on the measurement of the work actually performed by the CONTRACTOR as specified in the Work Order.

6. PREPARATION OF PROPOSALS

A. GENERAL

All blank spaces in the Proposal form must be filled in, as required, preferably in BLACK ink. All price information shall be shown in both words and figures where required. No changes shall be made in the phraseology of the forms. Written amounts shall govern in case of discrepancy between the amounts stated in writing and the amounts stated in figures. In case of discrepancy between unit prices and extended totals, unit prices shall prevail.

Any Proposal shall be deemed informal which contains omissions, erasures, alterations, or additions of any kind, or prices uncalled for, or in which any of the prices are obviously unbalanced, or which in any manner shall fail to conform to the conditions of the published Invitation to Bid.

Only one Proposal from any individual, firm, partnership, or corporation, under the same or different names, will be considered. Should it appear to the OWNER that any Bidder is interested in more than one Proposal for work contemplated; all Proposals in which such Bidder is interested will be rejected.

B. SIGNATURE

The Bidder shall sign his Proposal in the blank space provided therefor. If Bidder is a corporation, the legal name of the corporation shall be set forth above together with the signature of the officer or officers authorized to sign Contracts on behalf of the corporation. If Bidder is a partnership, the true name of the firm shall be set forth above together with the signature of the partner or partners authorized to sign Contracts in behalf of the partnership. If signature is by an agent, other than an officer of a corporation or a member of a partnership, a notarized power-of-attorney must be on file with the OWNER prior to opening of Proposals or submitted with the Proposal otherwise the Proposal will be regarded as not properly authorized.

C. INDEFINITE QUANTITIES

This is an "Indefinite Quantities" Contract with no fixed Contract price. The actual amount of work to be performed and the time of such performance will be determined by the OWNER or his properly authorized representative who will issue written Work Orders to the CONTRACTOR. The only work authorized under this Contract is that which is performed upon receipt of such a Work Order.

The Bidder shall not plead misunderstanding or deception because such listed quantities do not correspond with actual quantities. It is understood that the quantities may be increased or decreased as required to fulfill the OWNER's needs for installation, repair, and replacement of infrastructure throughout the 2-year term of this Contract.

D. SPECIAL BIDDING REQUIREMENTS

The Bidder's attention is brought to the hiring practices and licenses and permits of the City of Key West. These are defined in the addition to Article 38, ORDINANCES, PERMITS AND LICENSES, as set forth in the Supplementary Conditions.

The successful Bidder shall maintain a yard and office within the Lower Keys (west of the Seven-Mile Bridge). All equipment required for the work shall be available at that site. If the CONTRACTOR does not have this equipment at his yard he may obtain it by lease, rent, subcontract, or from another site within his company as required by Work Order as long as the equipment is available within 7 calendar days after receiving notice to do the work.

The Bidder shall submit with his Bid his experience record showing his experience and expertise in installation, repair, and replacement and cleaning of storm and sanitary sewers as well as installation, repair and replacement of roads and sidewalks. Such experience record shall provide at least five current or recent projects of similar work preferably within Florida or the southeastern United States. For each project the following information shall be provided:

1. Description and location of work.
2. Contract amount.
3. Dates work was performed.
4. OWNER.
5. Name of OWNER's contact person and phone number.
6. ENGINEER.
7. Name of ENGINEER's contact person and phone number.

E. ATTACHMENTS

Bidder shall complete and submit the following forms with his bid:

1. Bid Form
2. Public Entities Crime Form
3. Anti – Kickback Affidavit
4. City of Key West Indemnification
5. Local Vendor Certification
6. Equal Benefits Affidavit
7. Cone of Silence

F. PUBLIC ENTITY CRIMES FORM

Pursuant to the requirements of Chapter 89-114, Laws of Florida, pertaining to the sworn statement on Public Entity Crimes and the Convicted Vendor List all Bidders shall submit a signed and notarized statement with their Bid on the form provided herein.

7. STATE AND LOCAL SALES AND USE TAXES

Unless the Supplementary Conditions contains a statement that the OWNER is exempt from state sales tax on materials incorporated into the work due to the qualification of the work under this Contract, all state and local sales and use taxes as required by the laws and statutes of the state and its political subdivisions shall be paid by the CONTRACTOR. Prices quoted in the Proposal shall include all nonexempt sales and use taxes unless provision is made in the Proposal form to separately itemize the tax.

8. SUBMISSION OF PROPOSALS

All Proposals must be submitted not later than the time prescribed, at the place, and in the manner set forth in the Invitation to Bid. Proposals must be made on the Proposal forms provided herewith and submitted intact with the volume containing the Bidding Requirements, Contract Forms, Specifications, Drawings and Conditions of the Contract.

Each Proposal must be submitted in a sealed envelope, so marked as to indicate the Bidder's name and its contents without being opened, and addressed in conformance with the instructions in the Invitation to Bid. One original and six copies of the bid must be submitted.

9. MODIFICATION OR WITHDRAWAL OF PROPOSALS

Prior to the time and date designated for receipt of Proposals, any Proposal submitted may be withdrawn by notice to the party receiving Proposals at the place designated for receipt of Proposals. Such notice shall be in writing over the signature of the Bidder or by telegram. If by telegram, written confirmation over the signature of the Bidder shall be mailed and postmarked on or before the date and time set for receipt of Proposals. No Proposal may be withdrawn after the time scheduled for opening of Proposals unless the time specified in paragraph AWARD OF CONTRACT of these Instructions to Bidders shall have elapsed.

10. BID SECURITY (NOT APPLICABLE FOR THIS BID)

Proposals must be accompanied by cash, a certified check, or cashier's check drawn on a bank in good standing or a bid bond issued by a Surety authorized to issue such bonds in the state where the work is located in the amount of 5 percent of the total amount of the Proposal submitted. This bid security shall be given as a guarantee that the Bidder will not withdraw his Proposal for a period of 60 days after bid opening and that if awarded the Contract the successful Bidder will execute the attached Contract and furnish properly executed Performance and Payment Bonds, each in the full amount of the Contract price within the time specified.

The Attorney-in-Fact that executes this bond in behalf of the Surety must attach a notarized copy of his power-of-attorney as evidence of his authority to bind the Surety on the date of execution of the bond. Where State Statute requires, certification by a resident agent shall also be provided.

If the Bidder elects to furnish a Bid Bond, he shall use the Bid Bond form bound herewith, or one conforming substantially thereto in form and content.

11. RETURN OF BID SECURITY (NOT APPLICABLE)

Within 15 days after the award of the Contract the OWNER will return the bid securities to all Bidders whose Proposals are not to be further considered in awarding the Contract. Retained bid securities will be held until the Contract has been finally executed after which all bid securities, other than Bidders' bonds and any guarantees, which have been forfeited, will be returned to the respective Bidders whose Proposals they accompanied.

12. AWARD OF CONTRACT

Within 60 calendar days after the opening of Proposals the OWNER will accept two of the Proposals or will act in accordance with the following paragraphs. The acceptance of the Proposal will be by written notice of award mailed to the office designated in the Proposal or delivered to the Bidder's representative. In the event of failure of the two lowest responsive, responsible Bidder to sign the Contract and provide an acceptable Performance Bond, Payment Bond, insurance certificate(s) and evidence of holding required licenses and certificates, the OWNER may award the Contract to the next lowest responsive, responsible Bidder. Such award, if made, will be made within 75 days after the opening of Proposals.

The OWNER reserves the right to accept or reject any or all Proposals and to waive any informalities and irregularities in said Proposals.

13. BASIS OF AWARD

The award will be made by the OWNER on the basis of that Proposal from the lowest two responsive, responsible Bidders which, in the OWNER's sole and absolute judgment will best serve the interest of the OWNER.

If, at the time this Contract is to be awarded, the total of the two lowest bid is deemed unbalanced with 1 or more items or the bid exceeds the ENGINEERs estimate by 20% on 2 or more items the OWNER may reject all Proposals or take such other action as best serves the OWNER's interests.

14. EXECUTION OF CONTRACT

The successful Bidder shall, within 10 working days after receiving Notice of Award, sign and deliver to the OWNER a Contract in the form hereto attached together with the insurance certificate examples of the bonds as required in the Contract Documents and evidence of holding required licenses and certificates. Within 10 working days after receiving the signed Contract from the successful Bidder the OWNER's authorized agent will sign the Contract. Signature by both parties constitutes execution of the Contract.

15. CONTRACT BONDS

A. PERFORMANCE AND PAYMENT BONDS

The successful Bidder shall file with the OWNER, at the time of delivery of the signed Contract, a Performance Bond and Payment Bond on the form bound herewith, each in the full amount of the Contract price in accordance with the requirements of Florida Statutes Section 255.05 or 713.23, as applicable, as security for the faithful performance of the Contract and the payment of all persons supplying labor and materials for the construction of the work and to cover all guarantees against defective workmanship or materials, or both, during the warranty period following the date of final acceptance of the work by the OWNER. The Surety furnishing this bond shall have a sound financial standing and a record of service satisfactory to the OWNER, shall be authorized to do business in the State of Florida, and shall be listed on the current U.S. Department of Treasury Circular Number 570 or amendments thereto in the Federal Register of acceptable Sureties for federal projects. The CONTRACTOR shall supply the OWNER with phone numbers, addresses, and contacts for the Surety and their agents.

B. POWER-OF-ATTORNEY

The Attorney-in-Fact (Resident Agent) who executes this Performance and Payment Bond in behalf of the Surety must attach a notarized copy of his power-of-attorney as evidence of his authority to bind the Surety on the date of execution of the bond.

All Contracts, Performance and Payment Bonds, and respective powers-of-attorney will have the same date.

C. UNIT PRICES FOR BONDS

Because of the nature of this Contract the CONTRACTOR shall provide unit prices in the Proposal for providing the Performance and Payment Bonds. When a specific Work Order is authorized the unit price for providing the Performance and Payment Bonds will be considered in the total cost of that Work Order.

The Bidder shall provide unit prices for each bond item in the Proposal as all work performed within the 3-year Contract time could exceed $500,000, even though the Bidder's total of extended unit price items in the Proposal may be less than $500,000.

16. FAILURE TO EXECUTE CONTRACT AND FURNISH BOND

The Bidder who has a Contract awarded to him and who fails to promptly and properly execute the Contract or furnish the required Bonds shall forfeit the bid security that accompanied his bid and the bid security shall be retained as liquidated damages by the OWNER and it is agreed that this said sum is a fair estimate of the amount of damages the OWNER will sustain in case the Bidder fails to enter into a Contract or furnish the required Bonds. Bid security deposited in the form of cash, a certified check, or cashier's check shall be subject to the same requirement as a Bid Bond.

17. PERFORMANCE OF WORK BY CONTRACTOR

The CONTRACTOR shall perform on the site and with his own organization labor equivalent to at least 40 percent of the total amount of the work to be performed under this Contract. If, during the progress of the work hereunder, the CONTRACTOR requests a reduction of such percentage and the ENGINEER determines that it would be to the client's advantage the percentage of the labor required to be performed by the CONTRACTOR's own organization may be reduced; PROVIDED prior written approval of such reduction is obtained by the CONTRACTOR from the ENGINEER.

Each Bidder must furnish with his Proposal a list of the items that he will perform with his own forces and the estimated total cost of these items. Attach additional pages if necessary.

18. TIME OF COMPLETION

The time of completion of the work to be performed under this Contract is the essence of the Contract. Delays and extensions of time may be allowed in accordance with the provisions stated in the General Conditions. The time allowed for the completion of the work authorized by a Work Order will be stated in that particular Work Order.

When the CONTRACTOR receives a Notice to Proceed with the work authorized by each Work Order he shall commence work as soon as possible and shall complete all work within the number of calendar days stipulated in that particular Work Order.

Should the CONTRACTOR disagree with the time of completion for a specific Work Order he shall, within five calendar days of the receipt of the Work Order, make a written claim to the ENGINEER and OWNER for an extension in the time of completion. If, in the opinion of the ENGINEER, the CONTRACTOR presents sufficient evidence to justify the claim an extension in the time of completion will be allowed for the period determined by the ENGINEER.

END OF SECTION

Notice to Bidder: Use Black Ink or Type For Completing the Form.

BID PROPOSAL

To: The City of Key West

Address: 3126 Flagler Ave, Key West, Florida 33040

Project Title: GENERAL UTILITY SERVICES CONTRACT

Project: ITB #15-021

Bidder's contact person for additional information on this Proposal:

Company Name: _____

Contact Name & Telephone #: _____

Email Address: _____

BIDDER'S DECLARATION AND UNDERSTANDING

The undersigned, hereinafter called the Bidder, declares that the only persons or parties interested in this Proposal are those named herein, that this Proposal is, in all respects, fair and without fraud, that it is made without collusion with any official of the Owner, and that the Proposal is made without any connection or collusion with any person submitting another Proposal on this Contract.

The Bidder further declares that he has carefully examined the Contract Documents for the construction of the project, that he has personally inspected the site, that he has satisfied himself as to the quantities involved, including materials and equipment, and conditions of work involved, including the fact that the description of the quantities of work and materials, as included herein, is brief and is intended only to indicate the general nature of the work and to identify the said quantities with the detailed requirements of the Contract Documents, and that this Proposal is made according to the provisions and under the terms of the Contract Documents, which Documents are hereby made a part of this Proposal.

CONTRACT EXECUTION AND BONDS

The Bidder agrees that if this Proposal is accepted, he will, within 10 days, not including Sundays and legal holidays, after Notice of Award, sign the Contract in the form annexed hereto, and will at that time, deliver to the Owner evidence of holding required licenses and certificates, and will, to the extent of his Proposal, furnish all machinery, tools, apparatus, and other means of construction and do the work and furnish all the materials necessary to complete all work as specified or indicated in the Contract Documents.

CERTIFICATES OF INSURANCE

Bidder agrees to furnish the Owner, before commencing the work under this Contract, the certificates of insurance as specified in these Documents.

All contractors and SUBCONTRACTORS wishing to perform work for the City of Key West, Florida, will be required to comply with the following minimum insurance requirements:

Commercial General Liability Limits:	$2,000,000 Aggregate $1,000,000 Each Occurrence $2,000,000 Products-Comp / Op Aggregate $1,000,000 Personal Injury $300,000 Fire Damage / Legal

Coverage must include the following:

- Contractual Liability
- CG2015 (1185) or Equivalent
- No exclusion for XCU
- Products / Completed Operations
- Personal Injury
- Commercial Form
- Broad Form Property Damage
- Premises / Operations
- Independent Contractors (if any part of the work is to be subcontracted out)

Automobile Liability:	$1,000,000 Combined Single Limit (Include Hired & Non-Owned Liability)
Additional Umbrella Liability:	$2,000,000 Occurrence / Aggregate
Worker's Compensation:	Statutory
Employer's Liability:	$1,000,000 Each Accident $1,000,000 Disease-Policy Limit $1,000,000 Disease-Each Employee

The Contractor will be required to provide Builders Risk insurance for the completed value of the project.

The above reflects the minimum requirements for working with the City of Key West. Any requirements found in a particular job's contract that are of a higher standard will prevail.

The City of Key West must be named as an additional insured under all policies other than worker's compensation. Contractor's or SUBCONTRACTORS general liability shall be written on a primary and non-contributory basis. Certificates of insurance must be accompanied by a copy of the additional insured endorsement (CG 20151185 or combination of CG20150704 and CG20370704 will be accepted).

Contractors and SUBCONTRACTORS must obtain an endorsement from their carrier that waives and relinquishes any right of subrogation against the City of Key West and its agents, representatives, employees, and affiliates they might possess for any policy of insurance provided under this requirement or under any state or federal worker's compensation or employer's liability act.

Contractor's policies must be endorsed to give no less than thirty (30) day notice to the City in the event of material change or cancellation.

The City of Key West must be given a certificate of insurance showing that the above requirements have been met. The certificate of insurance must remain current and must include copies of the requested endorsements (additional insured, cancellation notice, and waiver of subrogation) in order for the City to issue payments to the contractor or SUBCONTRACTOR.

ADDENDA

The Bidder hereby acknowledges that he has received Addenda No's. _____, _____, ____, _____, ____, ____, ____, _____, _____, _____, _____, _____, _____, _____, _____, _____,
(Bidder shall insert No. of each Addendum received) and agrees that all addenda issued are hereby made part of the Contract Documents, and the Bidder further agrees that his Proposal(s) includes all impacts resulting from said addenda.

SALES AND USE TAXES

The Bidder agrees that all federal, state, and local sales and use taxes are included in the stated bid prices for the work.

UNIT PRICE ITEMS

The Bidder further proposes to accept as full payment for the work proposed herein the amounts computed under the provisions of the Contract Documents and based on the following unit price amounts, it being expressly understood that the unit prices are independent of the exact quantities involved. The Bidder agrees that the unit prices represent a true measure of the labor and materials required to perform the work, including all allowances for overhead and profit for each type and unit of work called for in these Contract Documents. The amounts shall be shown in both words and figures. In case of a discrepancy, the amount shown in words shall govern.

BID FORM

#	Item	Unit	Per Unit $	Per Unit Word
1	**Performance and Payment Bonds**			
a	For First $500,000 Worth of Construction Per/$1,000 of Construction	ea		
b	Next $500,000 to $2,000,000 Worth of Construction Per/$1,000 of Construction	ea		
2	**Mob/Demob**			
a	Mobilization and Demobilization, % of Work Order (includes M.O.T., General & Supplementary Conditions, Certified AutoCAD As-builts)	%	5	Five
3	**Personnel**			
a	Superintendent	hr		
b	Foreman	hr		
c	Operator	hr		
d	Laborer	hr		
e	Mason	hr		
f	Licensed Surveyor	hr		
4	**Equipment**			
a	Backhoe, with Rock Bucket, without Operator, Cat 426, or Equal	hr		

#	Item	Unit	Per Unit $	Per Unit Word
b	Backhoe, with Rock Bucket, without Operator, Cat 320, or Equal	hr		
c	Wheel Front End Loader, without Operator, Cat 950, or Equal	hr		
d	Air Compressor, 165 C.F.M.	hr		
e	Dump Truck, 15 CY, without Operator	hr		
f	Flatbed Dump Truck, without Operator	hr		
g	Backhoe, Rubber Tire, Various Attachments, without Operator, Ackerman H7MC, or equal	hr		
h	Trailer, Scow, off-road sand truck, without Operator, 24 CY minimum	hr		
i	Pavement Saw	hr		
j	3-inch Trash Pump	hr		
k	4-inch Trash Pump	hr		
l	6-inch Hydraulic Pump	hr		
m	1000 Gallon Sediment Box	hr		
n	Jet Truck (Cleaning)	hr		
o	Laser	hr		
p	Vibratory Roller	hr		

#	Item	Unit	Per Unit $	Per Unit Word
q	Plate Compactor	hr		
r	Dozer	hr		
s	Road Grader	hr		
t	Bob Cat or equivalent	hr		
u	Water Truck	hr		
v	Huber Grader	hr		
w	18” Auger Truck	hr		
5	**Materials**			
a	Crushed Lime rock	ton		
b	No. 57 Rock	ton		
c	No. 89 Rock	ton		
d	Screening Sand	ton		
e	Beach Sand (0.35 - 0.65 grain size)	ton		
f	Coral Sand	ton		
g	No. 4 Rock	ton		
h	Sod	sf		

#	Item	Unit	Per Unit $	Per Unit Word
	Trench Excavation and Backfill Per Detail			
6	**Pipe 12 inches and Under**			
a	0 - 6 feet Deep	lf		
b	6 - 8 feet Deep	lf		
c	8 - 10 feet Deep	lf		
d	10 - 12 feet Deep	lf		
7	**Pipe 15 inches through 24 inches**			
a	0 - 6 feet Deep	lf		
b	6 - 8 feet Deep	lf		
c	8 - 10 feet Deep	lf		
d	10 - 12 feet Deep	lf		
8	**Pipe 30 inches through 36 inches**			
a	0 - 6 feet Deep	lf		
b	6 - 8 feet Deep	lf		
c	8 - 10 feet Deep	lf		

#	Item	Unit	Per Unit $	Per Unit Word
d	10 - 12 feet Deep	lf		
9	**Pipe 42 inches through 48 inches**			
a	0 - 6 feet Deep	lf		
b	6 - 8 feet Deep	lf		
c	8 - 10 feet Deep	lf		
d	10 - 12 feet Deep	lf		
10	**Pipe 6 inches - During Sewer Service Lateral Installation, Not Part of Sewer Main Installation**			
a	0 - 6 feet Deep	lf		
b	6 - 8 feet Deep	lf		
c	8 - 10 feet Deep	lf		
d	10 - 12 feet Deep	lf		
11	**Pipe Base Stabilization**			
a	Foundation Stabilization	cy		
12	**Surface Restoration**			
a	Lime Rock Base	lf		

#	Item	Unit	Per Unit $	Per Unit Word
b	Asphalt Surface repair	sy		
c	Flowable Fill (500 psi)	cy		
13	**Pavement**			
a	Removal of Bitumious Surface	sy		
b	Raise Manholes Lids	ea		
c	Raise Water Valve	ea		
d	Raise Stormwater Inlet Grates	ea		
e	Asphalt Concrete Overlay	ton		
f	Rework Existing Base	sy		
g	Asphalt Concrete Leveling Course	ton		
h	Asphalt Milling, (angle milling machine) for small patchwork (less than 400 SF patches)	sy		
i	Asphalt Milling, (road or curbside or large sections)	sy		
j	Saw Cut Asphalt 0"-6"	lf		
k	Saw Cut Asphalt >6"	lf		
l	Saw Cut Concrete 0"-6"	lf		

#	Item	Unit	Per Unit $	Per Unit Word
m	Saw Cut Concrete >6"	lf		
14	**Sidewalk Installation**			
a	4 inches depth	sf		
b	6 inches depth	sf		
c	Rebar # 4	lb		
d	Concrete sidewalk and curb repairs	cy		
e	Thickened Edge	lf		
15	**Curb Installation**			
a	FDOT Type D	lf		
b	FDOT Type F	lf	$5.00	
c	FDOT Drop Curb	lf		
16	**Formed Concrete, placed**			
a	Misc. Formed Concrete, placed (i.e.: small retaining walls, etc.)	cy		
b	Concrete Band (12” x 18” with steel)	cy		
17	**Detectable Warning Paver**			

#	Item	Unit	Per Unit $	Per Unit Word
a	2-1/4 X 3-5/8 X 7-5/8 Brick Pavers with ADAAG Detectable Warning System - Endicott or	sf		
b	2-1/4 X 4 X 8 Brick Pavers with ADAAG Detectable Warning System - Endicott or equal	sf		
18	**Pavement Markings**			
a	STOP	ea		
b	Arrow	ea		
c	Separation of Lanes	lf		
d	White line	lf		
19	**Brick**			
a	Brick Installed (ASTM Specification Heavy Vehicular Paving Brick Type II)	sf		
b	Brick Installed (ASTM Specification Pedestrian Paving Brick Type I)	sf		
20	**Catch Basin and Inlets**			
a	Type 1 Top, Type P Bottom with 4 foot Diameter Alternate A, 0 6-foot Depth	ea		
b	Type 2 Top, Type P Bottom with 4 foot Diameter Alternate A, 0 6-foot Depth	ea		
c	Type 9 Top, Type P Bottom with 4 foot Diameter Alternate A, 0 6-foot Depth	ea		
d	Type F-3, Type P Bottom with 4 foot Diameter Alternate A, 0 6-foot Depth	ea		

#	Item	Unit	Per Unit $	Per Unit Word
e	Additional Depth over 6 foot for Type 1, Type 2 or Type 9 Curb Inlet, Type P Bottom with 4 foot Diameter Alternate A	vf		
21	**Ditch Bottom Inlet**			
a	Type C, 0 6 foot Depth	ea		
b	Additional Depth over 6 foot Depth for Ditch Bottom Inlet, Type C	vf		
c	Type J, 0 6 foot Depth	ea		
d	Additional Depth over 6 foot Depth for Ditch Bottom Inlet, Type J	vf		
e	Removal of Existing Inlets or Storm Manholes Structures, Unclassified Depth	ea		
22	**ADS Polyethylene Pipe**			
a	12 inches	lf		
b	15 inches	lf		
c	18 inches	lf		
d	24 inches	lf		
e	36 inches	lf		
f	42 inches	lf		
23	**Reinforced Concrete Pipe**			

#	Item	Unit	Per Unit $	Per Unit Word
a	15 inches	lf		
b	18 inches	lf		
c	24 inches	lf		
24	**Reinforced Concrete Pipe Class IV**			
a	24 inches	lf		
b	30 inches	lf		
c	36 inches	lf		
d	48 inches	lf		
25	**PVC Sch 40**			
a	1/2 inch	lf		
b	3/4 inch	lf		
c	1 inch	lf		
d	2 inch	lf		
e	4 inch	lf		
f	6 inch	lf		

#	Item	Unit	Per Unit $	Per Unit Word
26	**PVC Sch 80**			
a	1/2 inch	lf		
b	3/4 inch	lf		
c	1 inch	lf		
d	2 inch	lf		
e	4 inch	lf		
f	6 inch	lf		
27	**C - 900 Pipe DR18**			
a	4 inch	lf		
b	6 inch	lf		
c	8 inch	lf		
d	10 inch	lf		
e	12 inch	lf		
28	**C - 900 Pipe DR25**			
a	4 inch	lf		

#	Item	Unit	Per Unit $	Per Unit Word
b	6 inch	lf		
c	8 inch	lf		
d	10 inch	lf		
e	12 inch	lf		
29	**C - 905 Pipe DR25**			
a	14 inch	lf		
b	16 inch	lf		
c	18 inch	lf		
d	20 inch	lf		
e	24 inch	lf		
f	30 inch	lf		
g	36 inch	lf		
h	42 inch	lf		
i	48 inch	lf		
30	**C - 905 Pipe DR41**			

#	Item	Unit	Per Unit $	Per Unit Word
a	14 inch	lf		
b	16 inch	lf		
c	18 inch	lf		
d	20 inch	lf		
e	24 inch	lf		
f	30 inch	lf		
g	36 inch	lf		
h	42 inch	lf		
i	48 inch	lf		
31	**Joints**			
a	Mechanically Restrained Joints for PVC Pipe 4"	ea		
b	Mechanically Restrained Joints for PVC Pipe 6"	ea		
c	Mechanically Restrained Joints for PVC Pipe 8"	ea		
d	Mechanically Restrained Joints for PVC Pipe 10"	ea		
e	Mechanically Restrained Joints for PVC Pipe 12"	ea		

#	Item	Unit	Per Unit $	Per Unit Word
f	Mechanically Restrained Joints for PVC Pipe 16"	ea		
g	Mechanically Restrained Joints for PVC Pipe 18"	ea		
h	Mechanically Restrained Joints for PVC Pipe 20"	ea		
i	Mechanically Restrained Joints for PVC Pipe 24"	ea		
j	Mechanically Restrained Joints for PVC Pipe 30"	ea		
k	Mechanically Restrained Joints for PVC Pipe 36"	ea		
l	Mechanically Restrained Joints for PVC Pipe 42"	ea		
m	Mechanically Restrained Joints for PVC Pipe 48"	ea		
32	**Other**			
a	Removal of Existing Storm Drain Pipe, Unclassified Depth and Diameter	lf		
b	Exfiltration Trench	lf		
c	Seepage Trench	lf		
d	French Drain	lf		
33	**Manholes**			
a	Standard 4 foot Diameter Manholes, 0-6-foot Depth	ea		

#	Item	Unit	Per Unit $	Per Unit Word
b	Standard 4 foot Diameter Manholes, over 6 foot Depth	vf		
c	Drop Manhole Assemblies	vf		
d	Additional Cost to Provide Watertight Manhole Frame and Cover in Lieu of Standard Frame and Cover	ea		
e	Conflict Manholes (6-foot Diameter), 0-6 foot Depth	ea		
f	Conflict Manholes (6 foot Diameter), Over 6 foot Depth	vf		
34	**Service Connection Pipe Stub outs**			
a	6 inches	ea		
b	Connections to Existing Manholes	ea		
c	Removal of Existing Manholes, Unclassified Depth	ea		
d	Adjusting Existing Manholes	ea		
35	**Sewer Connection Services**			
a	Sewer Service Connection Pipe	lf		
b	Connection at Trench Wall	ea		
c	Cleanouts	ea		
d	Cleanout Box	ea		

#	Item	Unit	Per Unit $	Per Unit Word
36	**Cleaning**			
a	6-10 inch Diameter Pipe	lf		
b	12 - 15 inch Diameter Pipe	lf		
c	18-24 inch Diameter Pipe	lf		
d	36-42 inch Diameter Pipe	lf		
e	Manholes, Any Diameter	ea		
37	**PVC Wye Fittings or Connections**			
a	6 x 6	ea		
b	8 x 6	ea		
c	10 x 6	ea		
d	12 x 6	ea		
e	15 x 6	ea		
f	Ductile Iron or Cast Iron Fittings, Complete with Cement Mortar Lining and Thrust Blocks	lb		
38	**Connections to Dissimilar Gravity Pipe**			
a	8 inches	ea		

#	Item	Unit	Per Unit $	Per Unit Word
b	10 inches	ea		
c	12 inches	ea		
d	15 inches	ea		
e	Removal of Existing Sanitary Sewer lines, Unclassified Depth and Diameter	lf		
f	Concrete Encasement with steel	cy		
39	**Installation of Plug Valves and Valve Boxes**			
a	4 inches	ea		
b	6 inches	ea		
c	8 inches	ea		
d	10 inches	ea		
e	12 inches	ea		
f	18 inches	ea		
40	**Environmental Protection**			
a	Turbidity Screen	lf		
b	Silt Barrier	lf		

#	Item	Unit	Per Unit $	Per Unit Word
c	Concrete Encasement with steel	cy		
d	Dewatering Trench 4 ft deep	LS		
e	Dewatering Trench 6 ft deep	LS		
f	Dewatering Trench 8 ft deep	LS		
g	Dewatering Trench 10 ft deep	LS		
h	Dewatering Trench 12 ft deep	LS		
i	Dewatering Pit Excavation	LS		
41	**Waterline Relocation**			
a	4 inch	lf		
b	6 inch	lf		
c	8 inch	lf		
d	10 inch	lf		
e	12 inch	lf		
f	14 inch	lf		
g	16 inch	lf		

#	Item	Unit	Per Unit $	Per Unit Word
h	18 inch	lf		
42	**Testing**			
a	Bacterial Test-waterline	ea		
b	Compaction Testing for soil	ea		
c	Gravity Sewerline Pressure Test	ea		
d	Forcemain Sewerline Pressure Test	ea		
e	Infiltration Test for manholes	ea		
f	Waterline Pressure Test	ea		
43	**Landscaping**			
a	Transplant Existing Tree (0-10” in diameter) includes all labor, materials, equipment & maintenance	ea		
b	Plant New Tree (0-10” diameter) includes all labor, materials, equipment & maintenance	ea		
c	Transplant Existing Tree (over 10” in diameter) includes all labor, materials, equipment & maintenance	ea		
d	Plant New Tree (over 10” in diameter) includes all labor, materials, equipment & maintenance	ea		
e	Sod Removal	sf		
f	Sod Placement	sf		

#	Item	Unit	Per Unit $	Per Unit Word
g	Seeding	sf		
h	Debris Removal and hauling to an acceptable certified landfill	ton		
44	**Roadway Signs**			
a	F.D.O.T Sign Installation (includes sign, post and installation)	ea		
45	**Other**			
a	Markup Allowed -materials, equipment, testing, etc. not listed above	%	15	Fifteen
b	Markup Allowed on Approved Subcontractor Work	%	5	Five

List items to be performed by CONTRACTOR's own forces and the estimated total cost of these items.
(Use additional sheets if necessary.)

SUBCONTRACTORS

The Bidder further proposes that the following subcontracting firms or businesses will be awarded subcontracts for the following portions of the work in the event that the Bidder is awarded the Contract:

_____
Name

_____, _____, _____, _____
Street City State Zip

Name

_____, _____, _____ ,_____
Street City State Zip

_____
Name

_____, _____, _____,_____
Street City State Zip

_____
Name

_____, _____, _____,_____
Street City State Zip

SURETY

_____ whose address is

_____, _____, _____, _____
Street City State Zip

BIDDER

The name of the Bidder submitting this Proposal is

_____ doing business at

_____, _____, _____, _____
Street City State Zip

which is the address to which all communications concerned with this Proposal and with the Contract shall be sent.

The names of the principal officers of the corporation submitting this Proposal, or of the partnership, or of all persons interested in this Proposal as principals are as follows:

_____ _____

_____ _____

_____ _____

_____ _____

_____ _____

If Sole Proprietor or Partnership

IN WITNESS hereto the undersigned has set his (its) hand this _____ day of _____ 2015

_____
Signature of Bidder

_____
Title

If Corporation

IN WITNESS WHEREOF the undersigned corporation has caused this instrument to be executed and its seal affixed by its duly authorized officers this _____ day of _____ 2015

(SEAL)

_____
Name of Corporation

By _____

Title _____

Attest_____
Secretary

EXPERIENCE OF BIDDER

The Bidder states that he is an experienced CONTRACTOR and has completed similar projects within the last 5 years.

(List similar projects, with types, names of OWNERs, construction costs, ENGINEERs, and references with phone numbers. Use additional sheets if necessary.)

_____

_____

_____

_____

_____

_____

_____

_____

_____

_____

_____

_____

_____

_____

_____

END OF SECTION

FLORIDA BID BOND

BOND NO. _____

AMOUNT: $ _____

KNOW ALL MEN BY THESE PRESENTS, that _____

hereinafter called the PRINCIPAL, and _____

_____

a corporation duly organized under the laws of the State of _____
having its principal place of business at _____

_____in the State of _____,
and authorized to do business in the State of Florida, as SURETY, are held and firmly bound unto

_____

hereinafter called the OBLIGEE, in the sum of_____
DOLLARS ($_____) for the payment for which we bind ourselves, our heirs, executors, administrators, successors, and assigns, jointly and severally, firmly by these present.

THE CONDITION OF THIS BOND IS SUCH THAT:
WHEREAS, the PRINCIPAL is herewith submitting his or its Bid Proposal for the Police Station Roof Replacement, said Bid Proposal, by reference thereto, being hereby made a part hereof.
WHEREAS, the PRINCIPAL contemplates submitting or has submitted a bid to the OBLIGEE for the furnishing of all labor, materials (except those to be specifically furnished by the CITY), equipment, machinery, tools, apparatus, means of transportation for, and the performance of the work covered in the Proposal and the detailed Specifications, entitled:

WHEREAS, it was a condition precedent to the submission of said bid that a cashier's check, certified check, or bid bond in the amount of 5 percent of the base bid be submitted with said bid as a guarantee that the Bidder would, if awarded the Contract, enter into a written Contract with the CITY for the performance of said Contract, within 10 working days after written notice having been given of the award of the Contract.

NOW, THEREFORE, the conditions of this obligation are such that if the PRINCIPAL within 10 consecutive calendar days after written notice of such acceptance, enters into a written Contract with the OBLIGEE and furnishes the Performance and Payment Bonds, each in an amount equal to 100 percent of the base bid, satisfactory to the CITY, then this obligation shall be void; otherwise the sum herein stated shall be due and payable to the OBLIGEE and the Surety herein agrees to pay said sum immediately upon demand of the OBLIGEE in good and lawful money of the United States of America, as liquidated damages for failure thereof of said PRINCIPAL.

Signed and sealed this _____ day of _____, 2015.

PRINCIPAL

By_____

STATE OF _____)
: SS
COUNTY OF _____)

_____
SURETY

By _____

ANTI-KICKBACK AFFIDAVIT

STATE OF FLORIDA)
: SS
COUNTY OF MONROE)

I, the undersigned hereby duly sworn, depose and say that no portion of the sum herein bid will be paid to any employees of the City of Key West as a commission, kickback, reward or gift, directly or indirectly by me or any member of my firm or by an officer of the corporation.

By:_____

Sworn and subscribed before me this_____day of _____, 2015

NOTARY PUBLIC, State of Florida at Large

My Commission Expires:

* * * * * *

SWORN STATEMENT UNDER SECTION 287.133(3) (A)
FLORIDA STATUTES, ON **PUBLIC ENTITY CRIMES**

THIS FORM MUST BE SIGNED IN THE PRESENCE OF A NOTARY PUBLIC OR OTHER OFFICER AUTHORIZED TO ADMINISTER OATHS.

1. This sworn statement is submitted with Bid or Proposal for _____

   _____

2. This sworn statement is submitted by_____
   (name of entity submitting sworn statement)

   whose business address is _____

   _____

   and (if applicable) its Federal Employer Identification Number (FEIN) is_____

   (If the entity has no FEIN, include the Social Security Number of the individual

   signing this sworn statement _____

3. My name is _____
   (please print name of individual signing)

   and my relationship to the entity named above is _____

4. I understand that a "public entity crime" as defined in Paragraph 287.133(1)(g), Florida Statutes, means a violation of any state or federal law by a person with respect to and directly related to the transaction of business with any public entity or with an agency or political subdivision of any other state or with the United States, including but not limited to, any bid or contract for goods or services to be provided to any public or an agency or political subdivision of any other state or of the United States and involving antitrust, fraud, theft, bribery, collusion, racketeering, conspiracy, material misrepresentation.

5. I understand that "convicted" or "conviction" as defined in Paragraph 287.133(1)(b), Florida Statutes, means a finding of guilt or a conviction of a public entity crime, with or without an adjudication guilt, in any federal or state trial court of record relating to charges brought by indictment information after July 1, 1989, as a result of a jury verdict, nonjury trial, or entry of a plea of guilty or nolo contendere.

6. I understand that an "affiliate" as defined in Paragraph 287.133(1)(a), Florida Statutes, means

1. A predecessor or successor of a person convicted of a public entity crime; or

2. An entity under the control of any natural person who is active in the management of the entity and who has been convicted of a public entity crime. The term "affiliate" includes those officers, directors, executives, partners, shareholders, employees, members, and agents who are active in the management of an affiliate. The ownership by one person of shares constituting controlling interest in another person, or a pooling of equipment or income among persons when not for fair market value under an arm's length agreement, shall be a prima facie case that one person controls another person. A person who knowingly enters into a joint venture with a person who has been convicted of a public entity crime in Florida during the preceding 36 months shall be considered an affiliate.

7. I understand that a "person" as defined in Paragraph 287.133(1)(8), Florida Statutes, means any natural person or entity organized under the laws of any state or of the United States with the legal power to enter into a binding contract and which bids or applies to bid on contracts for the provision of goods or services let by a public entity, or which otherwise transacts or applies to transact business with public entity. The term "person" includes those officers, directors, executives, partners, shareholders, employees, members, and agents who are active in management of an entity.

8. Based on information and belief, the statement which I have marked below is true in relation to the entity submitting this sworn statement. (Please indicate which statement applies).

____Neither the entity submitting this sworn statement, nor any officers, directors, executives, partners, shareholders, employees, members, or agents who are active in management of the entity, nor any affiliate of the entity have been charged with and convicted of a public entity crime subsequent to July 1, 1989, AND (Please indicate which additional statement applies.)

_____There has been a proceeding concerning the conviction before a hearing of the State of Florida, Division of Administrative Hearings. The final order entered by the hearing officer did not place the person or affiliate on the convicted vendor list. (Please attach a copy of the final order.)

_____The person or affiliate was placed on the convicted vendor list. There has been a subsequent proceeding before a hearing officer of the State of

Florida, Division of Administrative Hearings. The final order entered by the hearing officer determined that it was in the public interest to remove the person or affiliate from the convicted vendor list. (Please attach a copy of the final order.)

_____The person or affiliate has not been put on the convicted vendor list. (Please describe any action taken by or pending with the Department of General Services.)

_____
(signature)

_____
(date)

STATE OF_____

COUNTY OF_____

PERSONALLY APPEARED BEFORE ME, the undersigned authority,

_____who, after first being sworn by me, affixed his/her
(name of individual signing)

signature in the space provided above on this _____ day of _____ , 2015.

My commission expires:

_____
NOTARY PUBLIC

INDEMNIFICATION

To the fullest extent permitted by law, the CONTRACTOR expressly agrees to indemnify and hold harmless the City of Key West, their officers, directors, agents, and employees (herein called the "indemnitees") from liabilities, damages, losses and costs, including, but not limited to, reasonable attorney's fees and court costs, such legal expenses to include costs incurred in establishing the indemnification and other rights agreed to in this Paragraph, to persons or property, to the extent caused by the negligence, recklessness, or intentional wrongful misconduct of the CONTRACTOR, its Subcontractors or persons employed or utilized by them in the performance of the Contract. Claims by indemnitees for indemnification shall be limited to the amount of CONTRACTOR's insurance or $1 million per occurrence, whichever is greater. The parties acknowledge that the amount of the indemnity required hereunder bears a reasonable commercial relationship to the Contract and it is part of the project specifications or the bid documents, if any.

The indemnification obligations under the Contract shall not be restricted in any way by any limitation on the amount or type of damages, compensation, or benefits payable by or for the CONTRACTOR under workers' compensation acts, disability benefits acts, or other employee benefits acts, and shall extend to and include any actions brought by or in the name of any employee of the CONTRACTOR or of any third party to whom CONTRACTOR may subcontract a part or all of the Work. This indemnification shall continue beyond the date of completion of the work.

CONTRACTOR: _____ SEAL:

_____
Address

_____
Signature

_____
Print Name

_____
Title

DATE: _____

LOCAL VENDOR CERTIFICATION PURSUANT TO CKW ORDINANCE 09-22 SECTION 2-798

The undersigned, as a duly authorized representative of the vendor listed herein, certifies to the best of his/her knowledge and belief, that the vendor meets the definition of a "Local Business." For purposes of this section, "local business" shall mean a business which:

a. Principle address as registered with the FL Department of State located within 30 miles of the boundaries of the city, listed with the chief licensing official as having a business tax receipt with its principle address within 30 miles of the boundaries of the city for at least one year immediately prior to the issuance of the solicitation.

b. Maintains a workforce of at least 50 percent of its employees from the city or within 30 miles of its boundaries.

c. Having paid all current license taxes and any other fees due the city at least 24 hours prior to the publication of the call for bids or request for proposals.

- Not a local vendor pursuant to Ordinance 09-22 Section 2-798
- Qualifies as a local vendor pursuant to Ordinance 09-22 Section 2-798

If you qualify, please complete the following in support of the self-certification & submit copies of your County and City business licenses. Failure to provide the information requested will result in denial of certification as a local business.

Business Name _____ Phone: _____

Current Local Address: _____ Fax:_____
(P.O Box numbers may not be used to establish status)

Length of time at this address:_____

_____ Date: _____
Signature of Authorized Representative

STATE OF_____ COUNTY OF_____

The foregoing instrument was acknowledged before me this _____day of_____, 2015.

By_____, of _____
(Name of officer or agent, title of officer or agent) (Name of corporation acknowledging)

or has produced identification_____as identification
(Type of identification)

_____
Signature of Notary

_____
Print, Type or Stamp Name of Notary

_____
Title or Rank

Return Completed form with
Supporting documents to:
City of Key West Purchasing

EQUAL BENEFITS FOR DOMESTIC PARTNERS AFFIDAVIT

STATE OF _____)
: SS
COUNTY OF _____)

I, the undersigned hereby duly sworn, depose and say that the firm of _____ provides benefits to domestic partners of its employees on the same basis as it provides benefits to employees' spouses per City of Key West Ordinance Sec. 2-799.

By: _____

Sworn and subscribed before me this

_____ Day of _____, 2015.

_____
NOTARY PUBLIC, State of _____ at Large

My Commission Expires: _____

CONE OF SILENCE AFFIDAVIT

STATE OF _____)
: SS
COUNTY OF _____)

I the undersigned hereby duly sworn depose and say that all owner(s), partners, officers, directors, employees and agents representing the firm of _____ have read and understand the limitations and procedures regarding communications concerning City of Key West issued competitive solicitations pursuant to City of Key West Ordinance Section 2-773 Cone of Silence (attached).

Sworn and subscribed before me this

_____ Day of _____, 2015.

_____

NOTARY PUBLIC, State of _____ at Large

My Commission Expires: _____

BIDDER'S CHECKLIST

(Note: The purpose of this checklist is to serve as a reminder of major items to be addressed in submitting a bid and is not intended to be all inclusive. It does not alleviate the Bidder from the responsibility of becoming familiar with all aspects of the Contract Documents and Proper completion and submission of his bid.)

1.	All Contract Documents thoroughly read and understood.	[ ]
3.	All blank spaces in Bid filled in, using black ink.	[ ]
5.	Total and unit prices added correctly and attached Schedule of Values	[ ]
7.	Addenda acknowledged.	[ ]
9.	Subcontractors are named as indicated in the Bid.	[ ]
11.	Experience record included.	[ ]
13.	Bid signed by authorized officer.	[ ]
15.	Bid Bond completed and executed, including power-of-attorney dated the same date as Bid Bond.	[ ]
17.	Bidder familiar with federal, state, and local laws, ordinances, rules and regulations affecting performance of the work.	[ ]
19.	Bidder, if successful, able to obtain and/or demonstrate possession of required licenses and certificates within (10) ten calendar days after receiving a Notice of Award.	[ ]
21.	BID submitted intact with the volume entitled “Bidding Requirements” and “Contract Forms”, 1 original, and 2 flash drives as stated in the invitation to bid.	[ ]
23.	Bid Documents submitted in sealed envelope and addressed and labeled in conformance with the instructions in the Invitation to Bid.	[ ]

13. Anti-kickback Affidavit, Public Entity Crime Forms, City of Key West Indemnification Form, Local Vendor Certification, Equal Benefits, Cone of Silence. [ ]

PART 2

CONTRACT FORMS

CONTRACT

This Contract, made and entered into this _____ day of _____ 2015,

by and between the City of Key West, hereinafter called the "OWNER", and_____

_____

hereinafter called the "CONTRACTOR";

WITNESSETH:

The CONTRACTOR, in consideration of the sum to be paid him by the OWNER and of the covenants and agreements herein contained, hereby agrees at his own proper cost and expense to do all the work and furnish all the materials, tools, labor, and all appliances, machinery, and appurtenances for GENERAL UTILITIES SERVICES CONTRACT, Key West, Florida to the extent of the Proposal made by the CONTRACTOR, dated the _____ day of_____2015, all in full compliance with the Contract Documents referred to herein.

The BIDDING REQUIREMENTS, including the signed copy of the Proposal, the CONTRACT FORMS, the PERFORMANCE AND PAYMENT BONDS, the CONDITIONS OF THE CONTRACT, SPECIFICATIONS, and DRAWINGS, which consist of Detailed Drawings for items of work required for the general installation, repair and replacement of paving, sidewalks and other miscellaneous municipal work, appurtenances and other items, dated July 2015, are hereby referred to and by reference made a part of this Contract as fully and completely as if the same were fully set forth herein and are mutually cooperative therewith.

In consideration of the performance of the work as set forth in these Contract Documents, the OWNER agrees to pay to the CONTRACTOR the amount bid in the Proposal as adjusted in accordance with the Contract Documents, or as otherwise herein provided, and to make such payments in the manner and at the times provided in the Contract Documents.

The CONTRACTOR agrees to complete the work within the time specified in the Work Order and to accept as full payment hereunder the amounts computed as determined by the Contract Documents and based on the said Proposal.

The CONTRACTOR agrees to remedy all defects appearing in the work or developing in the materials furnished and the workmanship performed under this Contract during the warranty period after the date of final acceptance of the work by the OWNER, and further agrees to indemnify and save the OWNER harmless from any costs encountered in remedying such defects.

It is agreed that the Contract, based upon the Proposal, shall be fully complete within the stated number of consecutive calendar days from the date the Work Order is issued.

In the event that the CONTRACTOR shall fail to complete the work within the time limit or the extended time limit agreed upon, as more particularly set forth in a task specific Work Order, liquidated damages shall be paid at the rate of $250 per day. Sundays and legal holidays shall be included in determining days in default.

This Contract will automatically expire upon completion of the contract.

IN WITNESS WHEREOF, we, the parties hereto, each herewith subscribe the same this

_____ day of _____, A.D., 2015.

CITY OF KEY WEST

By_____

Title_____

CONTRACTOR

By_____

Title_____

PERFORMANCE BOND

BOND NO._____

AMOUNT: $_____

KNOW ALL MEN BY THESE PRESENTS, that in accordance with Florida Statutes Section

255.05, _____

with offices at _____
hereinafter called the CONTRACTOR (Principal), and

_____

with offices at _____
a corporation duly organized and existing under and by virtue of the laws of the State of Florida, hereinafter called the SURETY, and authorized to transact business within the State of Florida, as SURETY, are held and firmly bound unto **CITY OF KEY WEST,** represented by its

_____, hereinafter called the CITY (Obligee), in the sum of:

_____DOLLARS ($_____),
lawful money of the United States of America, for the payment of which, well and truly be made to the CITY, the CONTRACTOR and the SURETY bind themselves and each of their heirs, executors, administrators, successors, and assigns, jointly and severally, firmly by these presents as follows:

THE CONDITION OF THE ABOVE OBLIGATION IS SUCH THAT:

WHEREAS, the CONTRACTOR has executed and entered into a certain Contract hereto attached, with the CITY, dated _____, 2015, to furnish at his own cost, charges, and expense all the necessary materials, equipment, and/or labor in strict and express accordance with said Contract and the Contract Documents as defined therein, all of which is made a part of said Contract by certain terms and conditions in said Contract more particularly mentioned, which Contract, consisting of the various Contract Documents is made a part of this Bond as fully and completely as if said Contract Documents were set forth herein;

NOW THEREFORE, the conditions of this obligation are such that if the above bounden CONTRACTOR:

1. Shall in all respects comply with the terms and conditions of said Contract and his obligation there under, including the Contract Documents (which include the permit form, coral relocation plan, specifications, and conditions as prepared by the CITY, invitation to bid, instructions to bidders, the CONTRACTOR'S bid as accepted by the above CITY, the bid and contract performance and payment bonds, and all addenda, if any, issued prior to the opening of bids), being made a part of this bond by reference, at the times and in the manner prescribed in the contract; and

2. Promptly makes payments to all claimants, as defined in Section 255.05(1), Florida Statutes, supplying PRINCIPAL with labor, materials, or supplies, used directly or indirectly by PRINCIPAL in the prosecution of the work provided for in the contract; and

3. Pays CITY all losses, costs, expenses, damages, attorney's fees, including appellate proceedings, injury or loss of whatever kind and however arising including, without limitation, delay damages to which said CITY may be subject by reason of any wrongdoing, misconduct, want of care or skill, negligence, failure of performance, breach, failure to petition within the prescribed time, or default, including patent infringements, on the part of said CONTRACTOR, his agents or employees, in the execution or performance of said Contract; and

4. Performs the guarantee of all work and materials furnished under the contract for the time specified in the contract, then this obligation shall be void; otherwise, to remain in full force and effect for the term of said Contract.

AND, the said Surety for value received, hereby stipulates and agrees that no change involving any extension of time, or addition to the terms of the Contract Documents, or to the work to be performed, or materials to be furnished there under shall affect said obligation of said Surety on this Bond, and the said Surety does hereby waive notice of any such changes, extension of time, alterations, or additions of the terms of the Contract Documents, or to the work.

Any action instituted by a claimant under this bond for payment must be in accordance with the notice and time limitation provisions in Section 255.05(2), Florida Statutes.

IN WITNESS WHEREOF, the above parties bonded together have executed this instrument this _____ day of _____, 2015, the name and corporate seal of each corporate party being hereto affixed and those presents duly signed by its undersigned representative, pursuant to authority of its governing body.

CONTRACTOR

By: _____

(SEAL)

ATTEST

SURETY

By: _____

(SEAL)

ATTEST

PAYMENT BOND

BOND NO._____

AMOUNT: $_____

KNOW ALL MEN BY THESE PRESENTS, that in accordance with Florida Statutes Section

255.05, _____

with offices at _____

hereinafter called the CONTRACTOR, (Principal), and _____

_____

with offices at _____

a corporation duly organized and existing under and by virtue of the laws of the State of _____ , hereinafter called the SURETY, and authorized to transact business within the State of Florida, as SURETY, are held and firmly bound CITY OF KEY WEST**,**

represented by its _____, hereinafter called the City (Obligee), in the sum of:

_____DOLLARS ($_____), lawful money of the United States of America, for the payment of which, well and truly be made to the CITY, and the CONTRACTOR and the SURETY bind themselves and each of their heirs, executors, administrators, successors, and assigns, jointly and severally, firmly by these presents as follows:

THE CONDITION OF THE ABOVE OBLIGATION IS SUCH THAT:

WHEREAS, the CONTRACTOR has executed and entered into a certain Contract for

GENERAL UTILITY SERVICES CONTRACT

attached hereto, with the CITY, dated _____, 2015, to furnish at his own cost, charges, and expense the necessary materials, equipment, and/or labor in strict and express accordance with said Contract and the plans, drawings (if any), and specifications prepared by the CITY, all of which is made a part of said Contract by certain terms and conditions in said Contract more particularly mentioned, which Contract, consisting of the various Contract Documents specifically mentioned herein and relative hereto, is made a part of this Bond as fully and completely as if said Contract Documents were set forth herein.

NOW THEREFORE, the conditions of this obligation are such that if the above bounden CONTRACTOR shall in all respects comply with the terms and conditions of said Contract and

his obligation thereunder, including the Contract Documents (which include the plans, drawings , specifications, and conditions prepared by the CITY, invitation to bid, instructions to bidders, the CONTRACTOR'S bid as accepted by the CITY, the bid and contract and payment bonds, and all addenda, if any, issued prior to the opening of bids), and further that if said CONTRACTOR shall promptly make payments to all persons supplying materials, equipment, and/or labor, used directly or indirectly by said CONTRACTOR or SUBCONTRACTORS in the prosecution of the work for said contract is accordance with Florida Statutes, Section 255.05 or Section 713.23, then this obligation shall be void; otherwise to remain in full force and effect for the term of said contract, including and all guarantee periods as specifically mentioned in said Contract Documents.

AND, the said SURETY for value received, hereby stipulates and agrees that no change involving any extension of time, or addition to the terms of the Contract or to the work to be performed, or materials to be furnished thereunder, or in the Contract Documents and specifications accompanying the said contract shall affect said obligation of said SURETY on this Bond, and the said SURETY does hereby waive notice of any such changes, extension of time, alternations, or additions of the terms of the Contract, or to the work, to the Contract Documents, or to the specifications.

Claimant shall give written notice to the CONTRACTOR and the SURETY as required by Section 255.05 or Section 713.23, Florida Statutes. Any action instituted against the CONTRACTOR or SURETY under this bond for payment must be in accordance with the notice and time limitation provisions in Section 255.05(2) or Section 713.23, Florida Statutes.

IN WITNESS WHEREOF, the above parties bounded together have executed this instrument this _____ day of _____, 2015, the name and corporate seal of each corporate party being hereto affixed and those presents duly signed by its undersigned representative, pursuant to authority of its governing body.

CONTRACTOR

By:_____

(SEAL)

ATTEST

SURETY

By:_____

(SEAL)

ATTEST

PART 3

CONDITIONS OF THE CONTRACT

GENERAL CONDITIONS
CONTENTS

Article

DEFINITIONS

1. AS APPROVED
2. AS SHOWN, AND AS INDICATED
3. BIDDER
4. CONTRACT DOCUMENTS
5. CONTRACTOR
6. CONTRACT COMPLETION
7. DAYS
8. DRAWINGS
9. ENGINEER
10. NOTICE
11. OR EQUAL
12. OWNER
13. PLANS
14. SPECIFICATIONS
15. NOTICE TO PROCEED
16. SUBSTANTIAL COMPLETION
17. WORK

CONTRACT DOCUMENTS

18. INTENT OF CONTRACT DOCUMENTS
19. DISCREPANCIES AND OMISSIONS
20. CHANGES IN THE WORK
21. EXAMINATION AND VERIFICATION OF CONTRACT DOCUMENTS
22. DOCUMENTS TO BE KEPT ON THE JOBSITE
23. ADDITIONAL CONTRACT DOCUMENTS
24. OWNERSHIP OF CONTRACT DOCUMENTS

THE ENGINEER

25. AUTHORITY OF THE ENGINEER
26. DUTIES AND RESPONSIBILITIES OF THE ENGINEER
27. LIMITATIONS ON ENGINEER'S RESPONSIBILITIES
28. REJECTED WORK
29. LINES AND GRADES
30. SUBMITTALS
31. DETAIL DRAWINGS AND INSTRUCTIONS

THE CONTRACTOR AND HIS EMPLOYEES

32. CONTRACTOR, AN INDEPENDENT AGENT
32. (a) ASSIGNMENT OF CONTRACT
33. SUBCONTRACTING
34. INSURANCE AND LIABILITY
    A. GENERAL
    B. CONTRACTOR AND SUB-CONTRACTOR INSURANCE
    C. COMPENSATION AND EMPLOYER'S LIABILITY INSURANCE
    D. GENERAL LIABILITY INSURANCE (INCLUDING AUTOMOBILE)
    E. BUILDER'S RISK ALL RISK INSURANCE
    F. NO PERSONAL LIABILITY OF PUBLIC OFFICIALS
35. INDEMNITY
36. EXCLUSION OF CONTRACTOR CLAIMS
37. TAXES AND CHARGES
38. REQUIREMENTS OF STATE LAW FOR PUBLIC WORKS PROJECTS
39. CODES, ORDINANCES, PERMITS, AND LICENSES
40. SUPERINTENDENCE
41. RECEPTION OF ENGINEER'S COMMUNICATIONS
42. SAFETY
43. PROTECTION OF WORK AND PROPERTY
44. RESPONSIBILITY OF CONTRACTOR TO ACT IN AN EMERGENCY
45. MATERIALS AND APPLIANCES
46. CONTRACTORS' AND MANUFACTURERS' COMPLIANCE WITH STATE SAFETY, OSHA, AND OTHER CODE REQUIREMENTS
47. SUBSTITUTION OF MATERIALS
48. TESTS, SAMPLES, AND OBSERVATIONS
49. ROYALTIES AND PATENT
50. CONTRACTOR'S RIGHT TO TERMINATE CONTRACT
51. CORRECTION OF DEFECTIVE WORK DURING WARRANTY PERIOD

PROGRESS OF THE WORK

52. BEGINNING OF THE WORK
53. SCHEDULES AND PROGRESS REPORTS
54. PROSECUTION OF THE WORK
55. OWNER'S RIGHT TO RETAIN IMPERFECT WORK
56. OWNER'S RIGHT TO DO WORK
57. OWNER'S RIGHT TO TRANSFER EMPLOYMENT
58. DELAYS AND EXTENSION OF TIME
59. DIFFERING SITE CONDITION

Article

60. LIQUIDATED DAMAGES
61. OTHER CONTRACTS
62. USE OF PREMISES
63. SUBSTANTIAL COMPLETION DATE
64. PERFORMANCE TESTING
65. OWNER'S USE OF PORTION OF THE WORK
66. CUTTING AND PATCHING
67. CLEANING UP

PAYMENT

68. CHANGE ORDERS
- A. UNIT PRICE
- B. LUMP SUM
- C. COST REIMBURSEMENT WORK

69. PARTIAL PAYMENTS
- A. GENERAL
- B. ESTIMATE
- C. DEDUCTION FROM ESTIMATE
- D. QUALIFICATIONS FOR PARTIAL PAYMENT FOR MATERIALS DELIVERED
- E. PAYMENT

70. CLAIMS FOR EXTRA WORK
71. RELEASE OF LIENS OR CLAIMS
72. FINAL PAYMENT
73. NO WAIVER OF RIGHTS
74. ACCEPTANCE OF FINAL PAYMENT CONSTITUTES RELEASE

DEFINITIONS

Whenever in the Contract Documents the following terms are used, the intent and meaning shall be interpreted as follows:

1. AS APPROVED

The words "as approved", unless otherwise qualified, shall be understood to be followed by the words "by the ENGINEER for conformance with the Contract Document".

2. AS SHOWN, AND AS INDICATED

The words "as shown" and "as Indicated" shall be understood to be followed by the words "on the Drawings".

3. BIDDER

The person or persons, partnership, firm, or corporation submitting a Proposal for the work contemplated.

4. CONTRACT DOCUMENTS

The "Contract Documents" consist of the Bidding Requirements, Contract Forms, Conditions of the Contact, Specifications, Drawings, all modifications thereof incorporated into the Documents before their execution, Change Orders, and all other requirements incorporated by specific reference thereto. These form the Contract.

5. CONTRACTOR

The person or persons, partnership, firm, or corporation who enters into the Contract awarded him by the OWNER.

6. CONTRACT COMPLETION

The "Contract Completion" is the date the OWNER accepts the entire work as being in compliance with the Contract Documents, or formally waives nonconforming work to extent of nonconformity, and issues the final payment in accordance with the requirements set forth in Article, "Final Payment" of these General Conditions.

7. DAYS

Unless otherwise specifically stated, the term "days" will be understood to mean calendar days. Business day or working day means any day other than Saturday, Sunday, or legal holiday.

8. DRAWINGS

The term "Drawings" refers to the official Drawings, Profiles, cross sections, elevations, details, and other working drawings and supplementary drawings, or reproductions thereof, signed by the ENGINEER, which shows the location, character, dimensions, and details of the work to be performed. Drawings may either be bound in the same book as the balance of the Contract Documents, or bound in separate sets, and are a part of the Contract Documents, regardless of the method of binding.

9. ENGINEER

The person or organization identified as such in the Contract Documents. The Term "ENGINEER" means ENGINEER or his authorized representative.

10. NOTICE

The term "notice" or the requirement to notify, as used in the Contract Documents or applicable state or federal statutes, shall signify a written communication delivered in person or by registered mail to the individual, or to a member of the firm, or to an officer of the corporation for whom it is intended. Certified or registered mail shall be addressed to the last business address known to him who gives the notice.

11. OR EQUAL

The term "or equal" shall be understood to indicate that the "equal" Product is equivalent to or better than the Product named in function, performance, reliability, quality, and general configuration. Determination of equality in reference to the Project design requirements will be made by the ENGINEER. Such equal Products shall not be purchased or installed by the CONTRACTOR without written authorization.

12. OWNER

The person, organization, or public body identified as such in the Contract Documents.

13. PLANS (See Drawings)

14. SPECIFICATIONS

The term "Specifications" refers to those portions of the Contract Documents consisting of written technical descriptions of materials, equipment, construction systems, standards, and workmanship as applied to the work and certain administrative details applicable thereto. Where standard specifications, such as those of ASTM, AASHTO, etc., have been referred to, the applicable portions of such standard specifications shall become a part of these Contract Documents. If referenced specifications conflict with specifications contained herein, the requirements contained herein shall prevail.

15. NOTICE TO PROCEED

A written notices given by the OWNER to the CONTRACTOR (with a copy to the ENGINEER) fixing the date on which the Contract time will commence to run and on which the CONTRACTOR shall start to perform his obligation under the Contract Documents. The Notice to Proceed will be given within 30 days following the execution of the Contract by the OWNER.

16. SUBSTANTIAL COMPLETION

"Substantial Completion" shall be that degree of completion of the Project or a defined portion of the Project, as evidenced by the ENGINEER's written notice of Substantial Completion, sufficient to Provide the OWNER, at his discretion, the full-time use of the Project or defined portion of the Project for the purposes for which it was intended. "Substantial Completion" of an operating facility shall be that degree of completion that has Provided a minimum of 7 continuous days of successful, trouble-free, operation, which period shall begin after all performance and acceptance testing has been successfully demonstrated to the ENGINEER. All equipment contained in the work, plus all other components necessary to enable the OWNER to operate the facility in a manner that was intended, shall be complete on the substantial completion date.

17. WORK

The word "work" within these Contract Documents shall include all material, labor, tools, and all appliances, machinery, transportation, and appurtenances necessary to perform and complete the Contract, and such additional items not specifically indicated or described which can be reasonably inferred as belonging to the item described or indicated and as required by good Practice to Provide a complete and satisfactory system or structure. As used herein, "Provide" shall be understood to mean "furnish and install, complete in-place ".

CONTRACT DOCUMENTS

18. INTENT OF CONTRACT DOCUMENTS

The Contract Documents are complementary, and what is called for by one shall be as binding as if called for by all. The intent of the Documents is to describe a functionally complete Project (or part thereof) to be constructed in accordance with the Contract Documents. Any work, materials, or equipment that may reasonably be inferred from the Contract Documents as being required to produce the intended result shall be supplied whether or not specifically called for. When words which have a well-known technical or trade meaning are used to describe work, materials, or equipment, such words shall be interpreted in accordance with that meaning.

Reference to standard specifications, manuals, or codes of any technical society, organization or association, or to the laws or regulations of any governmental authority, whether such reference be specific or by implication, shall mean the latest standard specification, manual, code or laws or regulations in effect on the first published date of the Invitation to Bid, except as may be otherwise specifically stated. However, no Provision of any referenced standard specification, manual or code (whether or not specifically incorporated by reference in the Contract Documents) shall be effective to change the duties and responsibilities of OWNER, CONTRACTOR, or ENGINEER, or any of their consultants, agents, or employees from those set forth in the Contract Documents, nor shall it be effective to assign to ENGINEER, or any ENGINEER's consultants, agents, or employees, any duty or authority to supervise or direct the furnishing or performance of the work or any duty or authority to undertake responsibility contrary to the Provisions of Article LIMITATIONS ON ENGINEER'S RESPONSIBILITIES.

19. DISCREPANCIES AND OMISSIONS

Any discrepancies or omissions found in the Contract Documents shall be reported to the ENGINEER immediately. The ENGINEER will clarify discrepancies or omissions, in writing, within a reasonable time.

In resolving inconsistencies among two or more sections of the Contract Documents, Precedence shall be given in the following order:

A. CONTRACT
B. PROPOSAL
C. SUPPLEMENTARY CONDITIONS
D. INVITATION TO BID
E. INSTRUCTIONS TO BIDDERS
F. GENERAL CONDITIONS
G. SPECIFICATIONS
H. DRAWINGS

Addenda shall take Precedence over all sections referenced therein. Figure dimensions on Drawings shall take Precedence over scale dimensions. Detailed Drawings shall take Precedence over general Drawings.

20. CHANGES IN THE WORK

The OWNER, without notice to the Sureties and without invalidating the Contract, may order changes in the work within the general scope of the Contract by altering, adding to, or deducting from the work, the Contract being adjusted accordingly. All such work shall be executed under the conditions of the original Contract, except as specifically adjusted at the time of ordering such change.

In giving instructions, the ENGINEER may order minor changes in the work not involving extra cost and not inconsistent with the purposes of the Project, but otherwise, except in an emergency endangering life and Property, additions or deductions from the work shall be performed only in pursuance of an approved Change Order from the OWNER, countersigned by the ENGINEER.

If the work is reduced by alterations, such action shall not constitute a claim for damages based on loss of anticipated Profits.

21. EXAMINATION AND VERIFICATION OF CONTRACT DOCUMENTS

The CONTRACTOR shall thoroughly examine and become familiar with all of the various parts of these Contract Documents and determine the nature and location of the work, the general and local conditions, and all other matters, which can in any way affect the work under this Contract. Failure to make an examination necessary for this determination shall not release the CONTRACTOR from the obligations of this Contract. No verbal agreement or conversation with any officer, agent, or employee of the OWNER, or with the ENGINEER either before or after the execution of this Contract shall affect or modify any of the terms or obligations herein contained.

22. DOCUMENTS TO BE KEPT ON THE JOBSITE

The CONTRACTOR shall keep one copy of the Contract Documents on the job- site, in good order, available to the ENGINEER and to his representatives.

The CONTRACTOR shall maintain on a daily basis at the jobsite, and make available to the ENGINEER on request, one current record set of the Drawings which have been accurately marked to indicate all modifications in the completed work that differ from the design information shown on the Drawings. Upon Substantial completion of the work, the CONTRACTOR shall give the ENGINEER one complete set of these marked up record Drawings.

23. ADDITIONALCONTRACT DOCUMENTS

Copies of Contract Documents or Drawings may be obtained on request from the ENGINEER and by paying the actual cost of reproducing the Contract Documents or Drawings.

24. OWNERSHIP OF CONTRACT DOCUMENTS

All portions of the Contract Documents, and copies thereof furnished by the ENGINEER are instruments of service for this Project. They are not to be used on other work and are to be returned to the ENGINEER on request at the completion of the work. Any reuse of these materials without specific written verification or adaptation by the ENGINEER will be at the risk of the user and without liability or legal expense to the ENGINEER. Such user shall hold the ENGINEER harmless from any and all damages, including reasonable attorneys' fees, from any and all claims arising from any such reuse. Any such verification and adaptation shall entitle the ENGINEER to further compensation at rates to be agreed upon by the user and the ENGINEER.

THE ENGINEER

25. AUTHORITY OF THE ENGINEER

The ENGINEER will be the OWNER's representative during the construction period. His authority and responsibility will be limited to the Provisions set forth in these Contract Documents. The ENGINEER will have the Authority to reject work that does not conform to the Contract Documents. However, neither the ENGINEER's authority to act under this Provision, nor any decision made by him in good faith either to exercise or not to exercise such authority, shall give rise to any duty or responsibility of the ENGINEER to the CONTRACTOR, any SUBCONTRACTOR, their respective Sureties, any of their agents or employees, or any other person performing any of the work.

26. DUTIES AND RESPONSIBILITIES OF THE ENGINEER

The ENGINEER will make visits to the site at intervals appropriate to the various stages of construction to observe the Progress and quality of the work and to determine, in general, if the work is proceeding in accordance with the intent of the Contract

Documents. He will not make comprehensive or continuous review or observation to check quality or quantity of the work, and he will not be responsible for construction means, methods, techniques, sequences, or Procedures, or for safety Precautions and Programs in connection with the work. Visits and observations made by the ENGINEER shall not relieve the CONTRACTOR of his obligation to conduct comprehensive inspections of the work and to furnish materials and perform acceptable work, and to provide adequate safety Precautions, in conformance with the intent of the Contract.

The ENGINEER will make recommendations to the OWNER, in writing, on all claims of the OWNER or the CONTRACTOR arising from interpretation or execution of the Contract Documents. Such recommendations will be of factual and/or technical nature, and will not include the legal interpretation of the Contract Documents. Any necessary legal interpretation of the Contract Document will be made by the OWNER. Such recommendation shall be necessary before the CONTRACTOR can receive additional money under the terms of the Contract. Changes in work ordered by the ENGINEER shall be made in compliance with Article CHANGES IN THE WORK.

One or more Project representatives may be assigned to observe the work. It is understood that such Project representatives shall have the authority to issue notice of nonconformance and make decisions within the limitations of the authority of the ENGINEER. The CONTRACTOR shall furnish all reasonable assistance required by the ENGINEER or Project representatives for Proper observation of the work. The above-mentioned Project representatives shall not relieve the CONTRACTOR of his obligations to conduct comprehensive inspections of the work and to furnish materials and perform acceptable work, and to provide adequate safety Precautions, in conformance with the intent of the Contract.

27. LIMITATIONS ON ENGINEER'S RESPONSIBILITIES

ENGINEER will not be responsible for CONTRACTOR's means, methods, techniques, sequences, or Procedures of construction, or the safety Precautions and Programs incident thereto, and ENGINEER will not be responsible for CONTRACTOR's failure to perform or furnish the work in accordance with the Contract Documents.

ENGINEER will not be responsible for the acts or omissions of CONTRACTOR or of any SUBCONTRACTOR, any supplier, or of any other person or organization performing or furnishing any of the work.

Whenever in the Contract Documents the terms "as ordered", "as directed", "as required", "as allowed", "as approved", or terms of like effect or import are used, or the adjectives "reasonable", "suitable", "acceptable", "Proper", or "satisfactory", or adjectives of like effect or import are used to describe a requirement, direction, review or judgment of ENGINEER as to the work, it is intended that such requirement, direction, review or judgment will be solely to evaluate the work for compliance with the Contract Documents (unless there is a specific statement indicating otherwise). The use of any such term or adjective shall not be effective to assign to ENGINEER any duty or authority to supervise or direct the furnishing or performance of the work or any duty or authority to undertake responsibility contrary to the Provisions of this Article.

28. REJECTED WORK

Any defective work or nonconforming materials or equipment that may be discovered at any time prior to expiration of the warranty period shall be removed and replaced by work which shall conform to the Provisions of the Contract Documents. Any material condemned or rejected shall be removed at once from the Project site.

Failure on the part of the ENGINEER to condemn or reject bad or inferior work or to note nonconforming materials or equipment on CONTRACTOR submittals shall not be construed to imply acceptance of such work. The OWNER shall reserve and retain all of its rights and remedies at law against the CONTRACTOR and its Surety for correction of any and all latent defects discovered after the guarantee period.

29. LINES AND GRADES

Lines and grades shall be established as provided in the supplementary conditions. All stakes, marks, and other reference

information shall be carefully Preserved by the CONTRACTOR, and in case of their careless or unnecessary destruction or removal by him or his employees, such stakes, marks, and other information shall be replaced at the CONTRACTOR's expense.

30. SUBMITTALS

After checking and verifying all field measurements and after complying with applicable Procedures specified in Division I, GENERAL REQUIREMENTS, CONTRACTOR shall submit to ENGINEER, in accordance with the schedule for submittals for review, shop drawings, electrical diagrams, and catalog cuts for fabricated items and manufactured items (including mechanical and electrical equipment), which shall bear a stamp or specific written indication that CONTRACTOR has satisfied CONTRACTOR's responsibilities under the Contract Documents with respect to the review of the submittal. All submittals shall be identified as ENGINEER may require. The data shown shall be complete with respect to quantities, dimensions specified, performance and design criteria, materials, and similar data to enable ENGINEER to review the information. CONTRACTOR shall also submit to ENGINEER for review, with such Promptness as to cause no delay in work, all samples required by the Contract Documents. All samples shall have been checked by and accompanied by a specific written indication that CONTRACTOR has satisfied CONTRACTOR's responsibilities under the Contract Documents with respect to the review of the submission and shall be identified clearly as to material, supplier, pertinent data such as catalog numbers and the use for which intended.

Before submission of each submittal, CONTRACTOR shall have determined and verified all quantities, dimensions, specified performance criteria, installation requirements, materials, catalog numbers, and similar data with respect thereto and reviewed or coordinated each submittal with other submittals and with the requirements of the work and the Contract Documents.

At the time of each submission, CONTRACTOR shall give ENGINEER specific written notice of each variation that the submittal may have from the requirements of the Contract Documents, and, in addition, shall cause a specific notation to be made on each shop drawing submitted to ENGINEER for review and approval of each variation.

ENGINEER will review submittals with reasonable Promptness, but ENGINEER's review will be only for conformance with the design concept of the Project and for compliance with the information given in the Contract Documents and shall not extend to means, methods, techniques, sequences, or Procedures of construction (except where a specific means, method, technique, sequence, or Procedure of construction is indicated in or required by the Contract Documents) or to safety Precautions or Programs incident thereto. The review of a separate item as such will not indicate review of the assembly in which the item functions. CONTRACTOR shall make corrections required by ENGINEER, and shall return the required number of corrected copies of shop drawings and submit as required new samples for review. CONTRACTOR shall direct specific attention in writing to revisions other than the corrections called for by ENGINEER on Previous submittals.

ENGINEER's review of submittals shall not relieve CONTRACTOR from the responsibility for any variation from the requirements of the Contract Documents unless CONTRACTOR has in writing called ENGINEER's attention to each such variation at the time of submission and ENGINEER has given written approval of each such variation by a specific written notation thereof incorporated therein or accompanying the shop drawing or sample approval; nor will any approval by ENGINEER relieve CONTRACTOR from responsibility for errors or omissions in the shop drawings or from responsibility for having complied with the Provisions herein.

Where a shop drawing or sample is required by the specifications, any related work performed prior to ENGINEER's review and approval of the pertinent submission shall be at the sole expense and responsibility of the CONTRACTOR.

31. DETAIL DRAWINGS AND INSTRUCTIONS

The ENGINEER will furnish, with reasonable Promptness, additional instructions by means of Drawings or otherwise, if, in the ENGINEER's opinion, such are required for the Proper execution of the work. All such Drawings and instructions will be consistent with the Contract Documents, true developments thereof, and reasonably inferable there from.

<u>THE CONTRACTOR AND HIS EMPLOYEES</u>

32. CONTRACTOR, AN INDEPENDENT AGENT

The CONTRACTOR shall independently perform all work under this Contract and shall not be considered as an agent of the OWNER or of the ENGINEER, nor shall the CONTRACTOR's SUBCONTRACTORS or employees be subagents of the OWNER or of the ENGINEER.

32. (a) ASSIGNMENT OF CONTRACT

Assignment of any part or the whole of this Contract shall be subject to review and approval of the City Commission.

33. SUBCONTRACTING

Unless modified in the Supplementary Conditions, within 10 days after the execution of the Contract, the CONTRACTOR shall submit to the ENGINEER the names of all SUBCONTRACTORS Proposed for the work, including the names of any SUBCONTRACTORS that were submitted with the Proposal. The CONTRACTOR shall not employ any SUBCONTRACTORS to which the OWNER may object to as lacking capability to properly perform work of the type and scope anticipated.

The CONTRACTOR is as fully responsible to the OWNER for the acts and omissions of his SUBCONTRACTORS and of persons either directly or indirectly employed by them as he is for the acts and omissions of persons directly employed by him.

Nothing contained in the Contract Documents shall create any contractual relationship between any SUBCONTRACTOR and the OWNER or ENGINEER.

34. INSURANCE AND LIABILITY

A. GENERAL

The CONTRACTOR shall provide (from insurance companies acceptable to the OWNER) the insurance coverage designated hereinafter and pay all costs before commencing work under this Contract. The CONTRACTOR shall furnish the OWNER with certificates of insurance specified herein showing the type, amount class of operations covered, effective dates, and date of expiration of policies, and containing substantially the following statement:

"The insurance covered by this certificate shall not be canceled or materially altered, except after 30 days' written notice has been received by the OWNER."

In case of the breach of any Provision of this Article, the OWNER, at his option, may take out and maintain, at the expense of the CONTRACTOR, such insurance as the OWNER may deem Proper and may deduct the cost of such insurance from any monies which may be due or become due the CONTRACTOR under this Contract.

B. CONTRACTOR AND SUBCONTRACTOR INSURANCE

The CONTRACTOR shall not commence work under this Contract until he has obtained all the insurance required hereunder and such insurance has been reviewed by the OWNER, nor shall the CONTRACTOR allow any SUBCONTRACTOR to commence work on his subcontract until insurance specified below has been obtained. Review of the insurance by the OWNER shall not relieve or decrease the liability of the CONTRACTOR hereunder.

C. COMPENSATION AND EMPLOYER'S LIABILITY INSURANCE

The CONTRACTOR shall maintain during the life of this Contract the statutory amount of Workmen's Compensation Insurance, in addition, Employer's Liability Insurance in an amount as specified in the Supplementary Conditions, for each occurrence, for

all of his employees to be engaged in work on the Project under this Contract. In case any such work is subcontracted, the CONTRACTOR shall require the SUBCONTRACTOR to provide similar Workmen's Compensation and Employer's Liability Insurance for all of the SUBCONTRACTORS employees to be engaged in such work.

D. GENERAL LIABILITY INSURANCE (INCLUDING AUTOMOBILE)

The CONTRACTOR shall maintain during the life of this Contract such general liability, completed operations and Products liability, and automobile liability insurance as will Provide coverage for claims for damages for personal injury, including accidental death, as well as for claims for Property damage, which may arise directly or indirectly from performance of the work under this Contract. The general liability policy shall include contractual liability assumed by the CONTRACTOR under Article **INDEMNITY.** Coverage for Property damage shall be on a "broad form" basis with no exclusions for "X, C & U". The amount of insurance to be provided shall be as specified in the Supplementary Conditions.

In the event any work under this Contract is performed by a SUBCONTRACTOR, the CONTRACTOR shall be responsible for any liability directly or indirectly arising out of the work performed by the SUBCONTRACTOR, to the extent such liability is not covered by the SUBCONTRACTORS insurance.

The OWNER and ENGINEER, their officers, agents, and employees shall be named as Additional Insured's on the CONTRACTOR's and any SUBCONTRACTORS general liability and automobile liability insurance policies for any claims arising out of work performed under this Contract.

E. BUILDERS RISK ALL RISK INSURANCE

Unless otherwise modified in the Supplementary Conditions, the CONTRACTOR shall secure and maintain during the life of this Contract, Builders Risk All Risk Insurance coverage in an amount equal to the full value of the facilities under construction. Such insurance shall include coverage for earthquake, landslide, flood, collapse, loss due to the results of faulty workmanship or design, and all other normally covered risks, and shall provide for losses to be paid to the CONTRACTOR, OWNER, and ENGINEER as their interests may appear.

The OWNER and ENGINEER, their officers, agents, and employees shall be named as additional insured's on the CONTRACTOR's and any SUBCONTRACTORS Builders Risk All Risk insurance policies for any claims arising out of work performed under this Contract.

This insurance shall include a waiver of subrogation as to the ENGINEER, the OWNER, the CONTRACTOR, and their respective officers, agents, employees and SUBCONTRACTORS.

F. NO PERSONAL LIABILITY OF PUBLIC OFFICIALS

In carrying out any of the Provisions hereof in exercising any authority granted by the Contract, there will be no personal liability upon any public official.

35. INDEMNITY

To the maximum extent permitted by law, the CONTRACTOR shall indemnify and defend the OWNER and the ENGINEER, and their officers, employees, agents, and sub-consultants, from all claims and losses, including attorney's fees and litigation costs arising out of Property losses or health, safety, personal injury, or death claims by the CONTRACTOR, its SUBCONTRACTORS of any tier, and their employees, agents, or invitees regardless of the
fault, breach of Contract, or negligence of the OWNER or ENGINEER, excepting only such claims or losses that have been adjudicated to have been caused solely by the negligence of the OWNER or the ENGINEER and regardless of whether or not the CONTRACTOR is or can be named a party in a litigation.

36. EXCLUSION OF CONTRACTOR CLAIMS

In performing its obligations, the ENGINEER and its consultants may cause expense for the CONTRACTOR or its SUBCONTRACTORS and equipment or material suppliers. However, those parties and their sureties shall maintain no direct action against the ENGINEER, its officers, employees, agents, and consultants for any claim arising out of, in connection with, or resulting from the Engineering services performed or required to be performed.

37. TAXES AND CHARGES

The CONTRACTOR shall withhold and pay any and all sales and use taxes and all withholding taxes, whether State or Federal, and pay all Social Security charges and also all State Unemployment Compensation charges, and pay or cause to be withheld, as the case may be, any and all taxes, charges, or fees or sums whatsoever, which are now or may hereafter be required to be paid or withheld under any laws.

38. REQUIREMENTS OF STATE LAW FOR PUBLIC WORKS PROJECTS

When the Contract Documents concern public works of the state or any county, municipality, or political subdivision created by its laws, the applicable statutes shall apply. All parties to this Contract shall determine the contents of all applicable statutes and comply with their Provisions throughout the performance of the Contract.

39. CODES, ORDINANCES, PERMITS AND LICENSES

The CONTRACTOR shall keep himself fully informed of all local codes and ordinances, as well as state and federal laws, which in any manner affect the work herein specified. The CONTRACTOR shall at all times comply with said codes and ordinances, laws, and regulations, and Protect and indemnify the OWNER, the ENGINEER and their respective employees, and its officers and agents against any claim or liability arising from or based on the violation of any such laws, ordinances, or regulations. All permits, licenses and inspection fees necessary for Prosecution and completion of the work shall be secured and paid for by the CONTRACTOR, unless otherwise specified.

40. SUPERINTENDENCE

The CONTRACTOR shall keep at the Project site, competent supervisory personnel. The CONTRACTOR shall designate, in writing, before starting work, a Project superintendent who shall be an employee of the CONTRACTOR and shall have complete authority to represent and to act for the CONTRACTOR. ENGINEER shall be notified in writing prior to any change in superintendent assignment. The CONTRACTOR shall give efficient supervision to the work, using his best skill and attention. The CONTRACTOR shall be solely responsible for all construction means, methods, techniques, and Procedures, and for providing adequate safety Precautions and coordinating all portions of the work under the Contract. It is specifically understood and agreed that the ENGINEER, its employees and agents, shall not have control or charge of and shall not be responsible for the construction means, methods, techniques, Procedures, or for providing adequate safety Precautions in connection with the work under Contract.

41. RECEPTION OF ENGINEER'S COMMUNICATIONS

The superintendent shall receive for the CONTRACTOR all communications from the ENGINEER. Communications of major importance will be confirmed in writing upon request from the CONTRACTOR.

The ENGINEER may schedule Project meetings for the purposes of discussing and resolving matters concerning the various elements of the work. Time and place for these meetings and the names of persons required to be Present shall be as determined by the ENGINEER. CONTRACTOR shall comply with these attendance requirements and shall also require his SUBCONTRACTORS to comply.

42. SAFETY

The CONTRACTOR shall be solely and completely responsible for conditions of the jobsite, including safety of all persons (including employees) and Property during performance of the work. This requirement shall apply continuously and not be limited to normal working hours. Safety Provisions shall conform to U.S. Department of Labor (OSHA), and all other applicable federal, state, county, and local laws, ordinances, codes, and regulations. Where any of these are in conflict, the more stringent requirement shall be followed. The CONTRACTOR's failure to thoroughly familiarize himself with the aforementioned safety Provisions shall not relieve him from compliance with the obligations and penalties set forth therein.

The CONTRACTOR shall develop and maintain for the duration of this Contract, a safety Program that will effectively incorporate and implement all required safety Provisions. The CONTRACTOR shall appoint an employee who is qualified and authorized to supervise and enforce compliance with the safety Program. The duty of the ENGINEER to conduct construction review of the work does not include review or approval of the adequacy of the CONTRACTOR's safety Program, safety supervisor, or any safety measures taken in, on, or near the construction site. The CONTRACTOR, as a part of his safety Program, shall maintain at his office or other well-known place at the jobsite, safety equipment applicable to the work as Prescribed by the aforementioned authorities, all articles necessary for giving first-aid to the injured, and shall establish the Procedure for the immediate removal to a hospital or a doctor's care of persons (including employees) who may be injured on the jobsite.

If death or serious injuries or serious damages are caused, the accident shall be reported immediately by telephone or messenger to both the ENGINEER and the OWNER. In addition, the CONTRACTOR must promptly report in writing to the ENGINEER all accidents whatsoever arising out of, or in connection with, the performance of the work whether on, or adjacent to, the site, giving full details and statements of witnesses.

If a claim is made by anyone against the CONTRACTOR or any SUBCONTRACTOR on account of any accident, the CONTRACTOR shall promptly report the facts in writing to the ENGINEER, giving full details of the claim.

43. PROTECTION OF WORK AND PROPERTY

The CONTRACTOR shall at all times safely guard and Protect from damage the OWNER's Property, adjacent Property, and his own work from injury or loss in connection with this Contract. All facilities required for Protection by federal, state, or municipal laws and regulations and local conditions must be provided and maintained.

The CONTRACTOR shall Protect his work and materials from damage due to the nature of the work, the elements, carelessness of other CONTRACTORs, or from any cause whatever until the completion and acceptance of the work. All loss or damages arising out of the nature of the work to be done under these Contract Documents, or from any unforeseen obstruction or defects which may be encountered in the Prosecution of the work, or from the action of the elements, shall be sustained by the CONTRACTOR.

44. RESPONSIBILITY OF CONTRACTOR TO ACT IN AN EMERGENCY

In case of an emergency which threatens loss or injury of Property, and/or safety of life, the CONTRACTOR shall act, without previous instructions from the OWNER or ENGINEER, as the situation may warrant. The CONTRACTOR shall notify the ENGINEER thereof immediately thereafter. Any claim for compensation by the CONTRACTOR, together with substantiating documents in regard to expense, shall be submitted to the OWNER through the ENGINEER and the amount of compensation shall be determined by agreement.

45. MATERIALS AND APPLIANCES

Unless otherwise stipulated, the CONTRACTOR shall Provide and pay for all materials, labor, water, tools, equipment, heat, light, fuel, power, transportation, construction equipment and machinery, appliances, telephone, sanitary facilities, temporary facilities and other facilities and incidentals necessary for the execution and completion of the work.

Unless otherwise specified, all materials shall be new, and both workmanship and materials shall be of good quality. The CONTRACTOR shall, if required, furnish satisfactory evidence as to the kind and quality of materials.

In selecting and/or approving equipment for installation in the Project, the OWNER and ENGINEER assume no responsibility for injury or claims resulting from failure of the equipment to comply with applicable federal, state, and local safety codes or requirements, or the safety requirements of a recognized agency, or failure due to faulty design concepts, or defective workmanship and materials.

46. CONTRACTORS' AND MANUFACTURERS' COMPLIANCE WITH STATE SAFETY, OSHA, AND OTHER CODE REQUIREMENTS

The completed work shall include all necessary permanent safety devices, such as machinery guards and similar ordinary safety items required by the state and federal (OSHA) industrial authorities and applicable local and national codes. Further, any features of the work subject to such safety regulations shall be fabricated, furnished, and installed (including OWNER-furnished equipment) in compliance with these requirements. CONTRACTORs and manufacturers of equipment shall be held responsible for compliance with the requirements included herein. CONTRACTORs shall notify all equipment suppliers and SUBCONTRACTORS of the Provisions of this Article.

47. SUBSTITUTION OF MATERIALS

Except for OWNER-selected equipment items, and items where no substitution is clearly specified, whenever any material, article, device, Product, fixture, form, type of construction, or Process is indicated or specified by patent or Proprietary name, by name of manufacturer, or by catalog number, such specifications shall be deemed to be used for the purpose of establishing a standard of quality and facilitating the description of the material or Process desired. This Procedure is not to be construed as eliminating from competition other Products of equal or better quality by other manufacturers where fully suitable in design, and shall be deemed to be followed by the words "or equal". The CONTRACTOR may, in such cases, submit complete data to the ENGINEER for consideration of another material, type, or Process that shall be substantially equal in every respect to that so indicated or specified. Substitute materials shall not be used unless approved in writing. The ENGINEER will be the sole judge of the substituted article or material.

48. TESTS, SAMPLES, AND OBSERVATIONS

The CONTRACTOR shall furnish, without extra charge, the necessary test pieces and samples, including facilities and labor for obtaining the same, as requested by the ENGINEER. When required, the CONTRACTOR shall furnish certificates of tests of materials and equipment made at the point of manufacture by a recognized testing laboratory.

The OWNER, ENGINEER, and authorized government agents, and their representatives shall at all times be Provided safe access to the work wherever it is in Preparation or Progress, and the CONTRACTOR shall Provide facilities for such access and for observations, including maintenance of temporary and permanent access.

If the Specifications, laws, ordinances, or any public authority require any work, to be specially tested or approved, the CONTRACTOR shall give timely notice of its readiness for observations. If any work should be covered up without approval or consent of the ENGINEER, it shall, if required by the ENGINEER, be uncovered for examination at the CONTRACTOR's expense.

Reexamination of questioned work may be ordered by the ENGINEER, and, if so ordered, the work shall be uncovered by the CONTRACTOR. If such work is found to be in accordance with the Contract Documents, the OWNER will pay the cost of uncovering, exposure, observation, inspection, testing and reconstruction. If such work is found to be not in accordance with the Contract Documents, the CONTRACTOR shall correct the defective work, and the cost of reexamination and correction of the defective work shall be paid by the CONTRACTOR.

49. ROYALTIES AND PATENTS

The CONTRACTOR shall pay all royalty and licenses fees, unless otherwise specified. The CONTRACTOR shall defend all suits or claims for infringement of any patent rights and shall save the OWNER and the ENGINEER harmless from any and all loss, including reasonable attorneys' fees, on account thereof.

50. CONTRACTOR'S RIGHT TO TERMINATE CONTRACT

If the work should be stopped under an order of any court or other public authority for a period of more than 3 months, through no act or fault of the CONTRACTOR, its SUBCONTRACTORS, or respective employees or if the ENGINEER should fail to make recommendation for payment to the OWNER or return payment request to CONTRACTOR for revision within 30 days after it is due, or if the OWNER should fail to pay the CONTRACTOR within 30 days after time specified in Article PARTIAL PAYMENTS, any sum recommended by the ENGINEER, then the CONTRACTOR may, upon 15 days' written notice to the OWNER and the ENGINEER, stop work or terminate this Contract and recover from the OWNER payment for all acceptable work performed and reasonable termination expenses, unless said default has been remedied.

51. CORRECTION OF DEFECTIVE WORK DURING WARRANTY PERIOD

The CONTRACTOR hereby agrees to make, at his own expense, all repairs or replacements necessitated by defects in materials or workmanship, Provided under terms of this Contract, and pay for any damage to other works resulting from such defects, which become evident within 2 years after the date of final acceptance of the work or within 2 years after the date of substantial completion established by the ENGINEER for specified items of equipment, or within such longer period as may be Prescribed by law or by the terms of any applicable special guarantee required by the Contract Documents. Un-remedied defects identified for correction during the warranty period but remaining after its expiration shall be considered as part of the obligations of the warranty. Defects in material, workmanship, or equipment which are remedied as a result of obligations of the warranty shall subject the remedied portion of the work to an extended warranty period of 2 years after the defect has been remedied.

The CONTRACTOR further assumes responsibility for a similar guarantee for all work and materials provided by SUBCONTRACTORS or manufacturers of packaged equipment components. The effective date for the start of the guarantee or warranty period for equipment qualifying as substantially complete is defined in Article SUBSTANTIAL COMPLETION, AND Article SUBSTANTIAL COMPLETION DATE, in these General Conditions.

The CONTRACTOR also agrees to hold the OWNER and the ENGINEER harmless from liability of any kind arising from damage due to said defects. The CONTRACTOR shall make all repairs and replacements promptly upon receipt of written order for same from the OWNER. If the CONTRACTOR fails to make the repairs and replacements promptly, or in an emergency where delay would cause serious risk, or loss, or damage, the OWNER may have the defective work corrected or the rejected work removed and replaced, and the CONTRACTOR and his Surety shall be liable for the cost thereof.

PROGRESS OF THE WORK

52. BEGINNING OF THE WORK

Following execution of the Contract, the CONTRACTOR shall meet with the OWNER and ENGINEER relative to his arrangements for prosecuting the work.

53. SCHEDULES AND PROGRESS REPORTS

Prior to starting the construction, the CONTRACTOR shall Prepare and submit to the ENGINEER, a progress schedule showing the dates on which each part or division of the work is expected to be started and finished, and a preliminary schedule for submittals. The progress schedule for submittals shall be brought up to date and submitted to the ENGINEER at the end of each month or at such other times the ENGINEER may request.

The CONTRACTOR shall forward to the ENGINEER, at the end of each month, an itemized report of the delivery status of major and critical items of purchased equipment and material, including shop drawings and the status of shop and field fabricated work. These Progress reports shall indicate the date of the purchase order, the current percentage of completion, estimated delivery, and cause of delay, if any.

If the completion of any part of the work or the delivery of materials is behind the submitted Progress schedule, the CONTRACTOR shall submit in writing a plan acceptable to the OWNER and ENGINEER for bringing the work up to schedule.

The OWNER shall have the right to withhold Progress payments for the work if the CONTRACTOR fails to update and submit the Progress schedule and reports as specified.

54. PROSECUTION OF THE WORK

It is expressly understood and agreed that the time of beginning, rate of Progress, and time of completion of the work are the essence of this Contract. The work shall be prosecuted at such time, and in or on such part or parts of the Project as may be required, to complete the Project as contemplated in the Contract Documents and the Progress schedule.

If the CONTRACTOR desires to carry on work at night or outside the regular hours, he shall give timely notice to the ENGINEER to allow satisfactory arrangements to be made for observing the work in Progress.

55. OWNER'S RIGHT TO RETAIN IMPERFECT WORK

If any part or portion of the work completed under this Contract shall Prove defective and not in accordance with the Drawings and Specifications, and if the imperfection in the same shall not be of sufficient magnitude or importance as to make the work dangerous or unsuitable, or if the removal of such work will create conditions which are dangerous or undesirable, the OWNER shall have the right and authority to retain such work but will make such deductions in the final payment therefore as may be just and reasonable.

56. OWNER'S RIGHT TO DO WORK

Should the CONTRACTOR neglect to Prosecute the work in conformance with the Contract Documents or neglect or refuse at his own cost to remove and replace work rejected by the ENGINEER, then the OWNER may notify the Surety of the condition, and after 10 days' written notice to the CONTRACTOR and the Surety, or without notice if an emergency or danger to the work or public exists, and without Prejudice to any other right which the OWNER may have under Contract, or otherwise, take over that portion of the work which has been improperly or non-timely executed, and make good the deficiencies and deduct the cost thereof from the payments then or thereafter due the CONTRACTOR.

57. OWNER'S RIGHT TO TRANSFER EMPLOYMENT

If the CONTRACTOR should abandon the work or if he should persistently or repeatedly refuse or should fail to make Prompt payment to SUBCONTRACTORS for material or labor, or to persistently disregard laws, ordinances, or to Prosecute the work in conformance with the Contract Documents, or otherwise be guilty of a substantial violation of any Provision of the Contract or any laws or ordinance, then the OWNER may, without Prejudice to any other right or remedy, and after giving the CONTRACTOR and Surety 10 days' written notice, transfer the employment for said work from the CONTRACTOR to the Surety. Upon receipt of such notice, such Surety shall enter upon the Premises and take possession of all materials, tools, and appliances thereon for the purpose of completing the work included under this Contract and employ by Contract or otherwise, any qualified person or persons to finish the work and Provide the materials therefore, in accordance with the Contract Documents, without termination of the continuing full force and effect of this Contract. In case of such transfer of employment to such Surety, the Surety shall be paid in its own name on estimates according to the terms hereof without any right of the CONTRACTOR to make any claim for the same or any part thereof.

If, after the furnishing of said written notice to the Surety, the CONTRACTOR and the Surety still fail to make reasonable progress on the performance of the work, the OWNER may terminate the employment of the CONTRACTOR and take possession of the Premises and of all materials, tools, and appliances thereon and finish the work by whatever method he may deem expedient and charge the cost thereof to the CONTRACTOR and the Surety. In such case, the CONTRACTOR shall not be entitled to receive any further payment until the work is finished. If the expense of completing the Contract, including compensation for additional managerial and administrative services, shall exceed such unpaid balance, the CONTRACTOR and the Surety shall pay the difference to the OWNER.

58. DELAYS AND EXTENSION OF TIME

If the CONTRACTOR is delayed in the Progress of the work by any act or neglect of the OWNER or the ENGINEER, or by any separate CONTRACTOR employed by the OWNER, or by strikes, lockouts, fire, adverse weather conditions not reasonably anticipated, or acts of Nature, and if the CONTRACTOR, within 48 hours of the start of the occurrence, gives written notice to the OWNER of the cause of the potential delay and estimate of the possible time extension involved, and within 10 days after the cause of the delay has been remedied, the CONTRACTOR gives written notice to the OWNER of any actual time extension requested as a result of the aforementioned occurrence, then the Contract time may be extended by change order for such reasonable time as the ENGINEER determines. It is agreed that no claim shall be made or allowed for any damages, loss, or expense which may arise out of any delay caused by the above referenced acts or occurrences other than claims for the appropriate extension of time. No extension of time will be granted to the CONTRACTOR for delays occurring to parts of the work that have no measurable impact on the completion of the total work under this Contract. No extension of time will be considered for weather conditions reasonably anticipated for the area in which the work is being performed. Reasonably anticipated weather conditions will be based on official records of monthly Precipitation and other historical data. Adverse weather conditions, if determined to be of a severity that would impact Progress of the work, may be considered as cause for an extension of Contract completion time.

Delays in delivery of equipment or material purchased by the CONTRACTOR or his SUBCONTRACTORS, including OWNER-selected equipment shall not be considered as a just cause for delay, unless the OWNER determines that for good cause the delay is beyond the control of the CONTRACTOR. The CONTRACTOR shall be fully responsible for the timely ordering, scheduling, complete the work is the per-diem rate, as stipulated in the Proposal. The said amount is hereby agreed upon as a reasonable estimate of the costs, which may be accrued by the OWNER after the expiration of the time of completion. It is expressly understood and agreed that this amount is not to be considered in the nature of a penalty, but as liquidated damages which have accrued against the CONTRACTOR. The OWNER shall have the right to deduct such damages from any amount due, or that may become due the CONTRACTOR, or the amount of such damages shall be due and collectible from the CONTRACTOR or Surety.

59. DIFFERING SITE CONDITIONS

The CONTRACTOR shall promptly, and before the conditions are disturbed, give a written notice to the OWNER and ENGINEER of:

A. subsurface or latent physical conditions at the site which differ materially from those indicated in this contract,

B. unknown physical conditions at the site, of an unusual nature, which differ materially from those ordinarily encountered and generally recognized as inherent in work of the character provided for in the Contract.

The ENGINEER will investigate the site conditions promptly after receiving the notice. If the conditions do materially so differ and cause an increase or decrease in the CONTRACTOR's cost of, or the time required for, performing any part of the work under this Contract, whether or not changed as a result of the conditions, and equitable adjustment shall be made under this Article and the Contract modified in writing accordingly.

No request by the CONTRACTOR for an equitable adjustment to the Contract under this Article will be allowed, unless the CONTRACTOR has given the written notice required; Provided that the time prescribed above for giving written notice may be extended by the OWNER.

No request by the CONTRACTOR for an equitable adjustment to the Contract for differing site conditions will be allowed if made after final payment under this Contract.

60. LIQUIDATED DAMAGES

Should the CONTRACTOR fail to complete the work, or any part thereof, in the time agreed upon in the Contract or within such extra time as may have been allowed for delays by extensions granted as Provided in the Contract, the CONTRACTOR shall reimburse the OWNER for the additional expense and damage for each calendar day, Sundays and legal holidays included, that the Contract remains uncompleted after the Contract completion date. It is agreed that the amount of such additional expense and damage incurred by reason of failure to complete the work is the per-diem rate, as stipulated in the Proposal. The said amount is hereby agreed upon as a reasonable estimate of the costs which may be accrued by the OWNER after the expiration of the time of completion. It is expressly under- stood and agreed that this amount is not to be considered in the nature of a penalty, but as liquidated damages which have accrued against the CONTRACTOR. The OWNER shall have the right to deduct such damages from any amount due, or that may become due the CONTRACTOR, or the amount of such damages shall be due and collectible from the CONTRACTOR or Surety.

61. OTHER CONTRACTS

The OWNER reserves the right to let other Contracts in connection with the work. The CONTRACTOR shall afford other CONTRACTORs reasonable opportunity for the introduction and storage of their materials and the execution of their work and shall properly connect and coordinate his work with theirs.

If any part of the work under this Contract depends for Proper execution or results upon the work of any other CONTRACTOR, utility service company or OWNER, the CONTRACTOR shall inspect and Promptly report to the ENGINEER in writing any patent or apparent defects to deficiencies in such work that render it unsuitable for such Proper execution and results. The CONTRACTOR's failure to so report shall constitute and acceptance of the work by others as being fit and Proper for integration with work under this Contract, except for latent or non apparent defects and deficiencies in the work.

62. USE OF PREMISES

The CONTRACTOR shall confine his equipment, the storage of materials and the operation of his workers to limits shown on the Drawings or indicated by law, ordinances, permits, or directions of the ENGINEER, and shall not unreasonably encumber the Premises with his materials. The CONTRACTOR shall provide, at his own expense, the necessary rights-of-way and access to the work, which may be required outside the limits of the OWNER's Property and shall furnish the ENGINEER copies of permits and agreements for use of the Property outside that provided by the OWNER.

The CONTRACTOR shall not load nor permit any part of the structure to be loaded in any manner that will endanger the structure, nor shall CONTRACTOR subject any part of the work or adjacent Property to stresses or Pressures that will endanger it.

63. SUBSTANTIAL COMPLETION DATE

The ENGINEER may issue a written notice of substantial completion for the purpose of establishing the starting date for specific equipment guarantees, and to establish the date that the OWNER will assume the responsibility for the cost of operating such equipment. Said notice shall not be considered as final acceptance of any portion of the work or relieve the CONTRACTOR from completing the remaining work within the specified time and in full compliance with the Contract Documents. See SUBSTANTIAL COMPLETION under DEFINITIONS of these General Conditions.

64. PERFORMANCE TESTING

Operating equipment and systems shall be performance tested in the Presence of the ENGINEER to demonstrate compliance with the specified requirements. Performance testing shall be conducted under the specified design operating conditions or under such simulated operating conditions as recommended or approved by the ENGINEER. Schedule such testing with the ENGINEER at

least one week in advance of the planned date for testing.

65. OWNER'S USE OF PORTIONS OF THE WORK

Following issuance of the written notice of Substantial Completion, the OWNER may initiate operation of the facility. Such use shall not be considered as final acceptance of any portion of the work, nor shall such use be considered as cause for an extension of the Contract completion time, unless authorized by a Change Order issued by the OWNER.

66. CUTTING AND PATCHING

The CONTRACTOR shall do all cutting, fitting, or patching of his work that may be required to make its several parts come together Properly and fit it to receive or be received by work of other CONTRACTORs shown upon or reasonably implied by the Drawings.

67. CLEANING UP

The CONTRACTOR shall, at all times, keep Property on which work is in Progress and the adjacent Property free from accumulations of waste material or rubbish caused by employees or by the work. Upon completion of the construction, the CONTRACTOR shall remove all temporary structures, rubbish, and waste materials resulting from his operations.

PAYMENT

68. PAYMENT FOR CHANGE ORDERS

The OWNER's request for quotations on alterations to the work shall not be considered authorization to proceed with the work expediting, delivery, and installation of all equipment and materials. Within a reasonable period after the CONTRACTOR submits to the OWNER a written request for an extension of time, the ENGINEER will Present his written opinion to the OWNER as to whether an extension of time is justified, and, if so, his recommendation as to the number of days for time extension. The OWNER will make the final decision on all requests for extension of time.

Prior to the issuance of a formal Change Order, nor shall such request justify any delay in existing work. Quotations for alterations to the work shall include substantiating documentation with an itemized breakdown of CONTRACTOR and SUBCONTRACTOR costs, including labor, material, rentals, approved services, overhead, and profit. OWNER may require detailed cost data in order to substantiate the reasonableness of the proposed costs.

Any compensation paid in conjunction with the terms of a Change Order shall comprise total compensation due the CONTRACTOR for the work or alteration defined in the Change Order. By signing the Change Order, the CONTRACTOR acknowledges that the stipulated compensation includes payment for the work or alteration plus all payment for the interruption of schedules, extended overhead, delay, or any other impact claim or ripple effect, and by such signing specifically waives any reservation or claim for additional compensation in respect to the subject Change Order.

At the OWNER's option, payment or credit for any alterations covered by a Change Order shall be determined by one or a combination of the methods set forth in A, B, or C below, as applicable:

A. UNIT PRICES

Those unit Prices stipulated in the Proposal shall be utilized where they are applicable. In the event the Change Order results in a change in the original quantity that is materially and significantly different from the original bid quantity, a new unit Price shall be negotiated upon demand of either party. Unit Prices for new items included in the Change Order shall be negotiated and mutually agreed upon.

B. LUMP SUM

A total lump sum for the work negotiated and mutually acceptable to the CONTRACTOR and the OWNER.Lump sum quotations for modifications to the work shall include substantiating documentation with an itemized breakdown of CONTRACTOR and SUBCONTRACTOR costs, including labor, material, rentals, approved services, overhead, and Profit, all calculated as specified under "C" below.

C. COST REIMBURSEMENT WORK

The term "cost reimbursement" shall be understood to mean that payment for the work will be made on a time and expense basis, that is, on an accounting of the CONTRACTOR's forces, materials, equipment, and other items of cost as required and used to do the work.

If the method of payment cannot be agreed upon prior to the beginning of the work, and the OWNER directs by written Change Order that the work be done on a cost reimbursement basis, then the CONTRACTOR shall furnish labor, and furnish and install equipment and materials necessary to complete the work in a satisfactory manner and within a reasonable period of time. For the work performed, payment will be made for the documented actual cost of the following:

1. Labor including foremen for those hours they are assigned and participating in the cost reimbursement work (actual payroll cost, including wages, fringe benefits as established by negotiated labor agreements, labor insurance, and labor taxes as established by law). No other fixed labor burdens will be considered, unless approved in writing by the OWNER.
2. Material delivered and used on the designated work, including sales tax, if paid by the CONTRACTOR or his SUBCONTRACTOR.
3. Rental or equivalent rental cost of equipment, including necessary transportation for items having a value in excess of $100. Rental or equivalent rental cost will be allowed for only those days or hours during which the equipment is in actual use. Rental and transportation allowances shall not exceed the current rental rates prevailing in the locality. The rentals allowed for equipment will, in all cases, be understood to cover all fuel, supplies, repairs, and renewals, and no further allowances will be made for those items, unless specific agreement to that effect is made.
4. Additional bond, as required and approved by the OWNER.
5. Additional insurance (other than labor insurance) as required and approved by the OWNER.

In addition to items 1 through 5 above, an added fixed fee for general overhead and Profit shall be negotiated and allowed for the CONTRACTOR (or approved SUBCONTRACTOR) actually executing the Cost Reimbursement work.

An additional fixed fee shall be negotiated and allowed the CONTRACTOR for the administrative handling of portions of the work that are executed by an approved SUBCONTRACTOR. No additional fixed fee will be allowed for the administrative handling of work executed by a SUBCONTRACTOR of a SUBCONTRACTOR, unless by written permission from the OWNER.

The added fixed fees shall be considered to be full compensation, covering the cost of general supervision, overhead, Profit, and any other general expense. The CONTRACTOR's records shall make clear distinction between the direct costs of work paid for on a cost reimbursement basis and the costs of other work. The CONTRACTOR shall furnish the ENGINEER report sheets in duplicate of each day's cost reimbursement work no later than the working day following the performance of said work. The daily report sheets shall itemize the materials used, and shall cover the direct cost of labor and the charges for equipment rental, whether furnished by the CONTRACTOR, SUBCONTRACTOR or other forces. The daily report sheets shall provide names or identifications and classifications of workers, the hourly rate of pay and hours worked, and also the size, type, and identification number of equipment and hours operated.

Material charges shall be substantiated by valid copies of vendors' invoices. Such invoices shall be submitted with the daily report sheets, or, if not available, they shall be submitted with subsequent daily report sheets. Said daily report sheets shall be signed by the CONTRACTOR or his authorized agent.

The OWNER reserves the right to furnish such materials and equipment as he deems expedient and the CONTRACTOR shall have no claim for Profit or added fees on the cost of such materials and equipment. To receive partial payments and final payment for cost reimbursement work, the CONTRACTOR shall submit to the ENGINEER, detailed and complete documented verification of the CONTRACTOR's and any of his SUBCONTRACTORS' actual costs involved in the cost reimbursement work. Such costs shall be submitted within 30 days after said work has been performed.

69. PARTIAL PAYMENTS

A. GENERAL

Nothing in this Article shall be construed to affect the right, hereby reserved, to reject the whole or any part of the aforesaid work, should such work be later found not to comply with the Provisions of the Contract Documents. All estimated quantities of work for which partial payments have been made are subject to review and correction on the final estimate. Payment by the OWNER and acceptance by the CONTRACTOR of partial payments based on periodic estimates of quantities of work performed shall not, in any way, constitute acceptance of the estimated quantities used as a basis for computing the amounts of the partial payments.

B. ESTIMATE

At least 30 days before each progress payment falls due, as specified in the Supplementary Conditions, the CONTRACTOR shall submit to the ENGINEER a detailed estimate of the amount earned during the Preceding month for the separate portions of the work, and request payment. As used in this Article, the words "amount earned" means the value, on the date of the estimate for partial payment, of the work completed in accordance with the Contract Documents, and the value of approved materials delivered to the Project site suitable stored and protected prior to incorporation into the work.

ENGINEER will, within 7 days after receipt of each request for payment, either indicate in writing a recommendation of payment and present the request to OWNER, or return the request to CONTRACTOR indicating in writing ENGINEER's reasons for refusing to recommend payment. In the latter case, CONTRACTOR may, within 7 days, make the necessary corrections and resubmit the request.

ENGINEER may refuse to recommend the whole or any part of any payment if, in his opinion, it would be incorrect to make such representations to OWNER. ENGINEER may also refuse to recommend any such payment, or, because of subsequently discovered evidence or the results of subsequent inspections or tests, nullify any such payment previously recommended to such an extent as may be necessary in ENGINEER's opinion to protect the OWNER from loss because:

1. The work is defective, or completed work has been damaged requiring correction or replacement;

2. Written claims have been made against OWNER or Liens have been filed in connection with the work;

3. The Contract Price has been reduced because of Change Orders;

4. OWNER has been required to correct defective work or complete the work in accordance with Article OWNER'S RIGHT TO DO WORK;

5. Of CONTRACTOR's unsatisfactory Prosecution of the work in accordance with the Contract Documents; or
6. CONTRACTOR's failure to make payment to SUBCONTRACTORS or for labor, materials, or equipment.

C. DEDUCTION FROM ESTIMATE

Unless modified in the Supplementary Conditions, deductions from the estimate will be as described below:

1. The OWNER will deduct from the estimate, and retain as part security, 10 percent of the amount earned for work satisfactorily completed. A deduction and retainage of 10 percent will be made on the estimated amount earned for

approved items of material delivered to and properly stored at the jobsite but not incorporated into the work. When the work is 50 percent complete, the OWNER may reduce the retainage to 5 percent of the dollar value of all work satisfactorily completed to date provided the CONTRACTOR is making satisfactory Progress and there is no specific cause for a greater retainage. The OWNER may reinstate the retainage up to 10 percent if the OWNER determines, at his discretion, that the CONTRACTOR is not making satisfactory Progress or where there is other specific cause for such withholding.

D. QUALIFICATION FOR PARTIAL PAYMENT FOR MATERIALS DELIVERED

Unless modified in the Supplementary Conditions, qualification for partial payment for materials delivered but not yet incorporated into the work shall be as described below:

1. Materials, as used herein, shall be considered to be those items which are fabricated and manufactured material and equipment. No consideration shall be given to individual purchases of less than $200 for any one item.

2. To receive partial payment for materials delivered to the site, but not incorporated in the work, it shall be necessary for the CONTRACTOR to include a list of such materials on the Partial Payment Request. At his sole discretion, the ENGINEER may approve items for which partial payment is to be made. Partial payment shall be based on the CONTRACTOR's actual cost for the materials as evidenced by invoices from the supplier. Proper storage and Protection shall be provided by the CONTRACTOR, and as approved by the ENGINEER. Final payment shall be made only for materials actually incorporated in the work and, upon acceptance of the work, all materials remaining for which advance payments had been made shall revert to the CONTRACTOR, unless otherwise agreed, and partial payments made for these items shall be deducted from the final payment for the work.

3. CONTRACTOR warrants and guarantees that title to all work, materials, and equipment covered by any Application for Payment, whether incorporated in the Project or not, will pass to OWNER at the time of payment free and clear of all liens, claims, security interests, and encumbrances.

4. If requested by the ENGINEER, the CONTRACTOR shall provide, with subsequent pay requests, invoices receipted by the supplier showing payment in full has been made.

E. PAYMENT

After deducting the retainage and the amount of all previous partial payments made to the CONTRACTOR from the amount earned, the amount due will be made payable to the CONTRACTOR. Recommendations for payment received by the OWNER less than 9 days Prior to the scheduled day for payment will not be Processed or paid until the following month.

70. CLAIMS FOR EXTRA WORK

In any case where the CONTRACTOR deems additional time or compensation will become due him under this Contract for circumstances other than those defined in Article DELAYS AND EXTENSION OF TIME, the CONTRACTOR shall notify the ENGINEER, in writing, of his intention to make claim for such time or compensation before he begins the work on which he bases the claim, in order that such matters may be settled, if possible, or other appropriate action taken. The notice of claim shall be in duplicate, in writing, and shall state the circumstances and the reasons for the claim, but need not state the amount. If such notification is not given or if the ENGINEER is not afforded Proper facilities by the CONTRACTOR for keeping strict account of actual cost, then the CONTRACTOR hereby agrees to waive the claim for such additional time or compensation. Such notice by the CONTRACTOR, and fact that the ENGINEER has kept account of the cost as aforesaid, shall not in any way be construed as proving the validity of the claim.

No extension of time will be granted to the CONTRACTOR for delays resulting from extra work that have no measurable impact on the completion of the total Work under this Contract. Claims for additional time or compensation shall be made in itemized detail and submitted, in writing, to the OWNER and ENGINEER within 10 days following completion of that portion of the work

for which the CONTRACTOR bases his claim. Failure to make the claim for additional compensation in the manner and within the time specified above shall constitute waiver of that claim. In case the claim is found to be just, it shall be allowed and paid for as provided in Article PAYMENT FOR CHANGE ORDERS.

71. RELEASE OF LIENS OR CLAIMS

The CONTRACTOR shall indemnify and hold harmless the OWNER from all claims for labor and materials furnished under this Contract. Prior to the final payment, the CONTRACTOR shall furnish to the OWNER, as part of his final payment request, a certification that all of the CONTRACTOR's obligations on the project have been satisfied and that all monetary claims and indebtedness have been paid. The CONTRACTOR shall furnish complete and legal effective releases or waivers, satisfactory to the OWNER, of all liens arising out of or filed in connection with the work.

72. FINAL PAYMENT

Upon completion of all the work under this Contract, the CONTRACTOR shall notify the ENGINEER, in writing, that he has completed his part of the Contract and shall request final payment. Upon receipt of such notice the ENGINEER will inspect and, if acceptable, submit to the OWNER his recommendation as to acceptance of the completed work and as to the final estimate of the amount due the CONTRACTOR. Upon approval of this final estimate by the OWNER and compliance by the CONTRACTOR with Provisions in Article **RELEASE OF LIENS OR CLAIMS,** and other Provisions as may be applicable, the OWNER shall pay to the CONTRACTOR all monies due him under the Provisions of these Contract Documents.

73. NO WAIVER OF RIGHTS

Neither the inspection by the OWNER, through the ENGINEER or any of his employees, nor any order by the OWNER for payment of money, nor any payment for, or acceptance of, the whole or any part of the work by the OWNER or ENGINEER, nor any extension of time, nor any possession taken by the OWNER or its employees, shall operate as a waiver of any Provision of this Contract, or any power herein reserved to the OWNER, or any right to damages herein Provided, nor shall any waiver of any breach in this Contract be held to be a waiver of any other or subsequent breach. Acceptance or final payment shall not be final and conclusive with regards to latent defects, fraud, or such gross mistakes as may amount to fraud, or as regards the OWNER's rights under the warranty.

74. ACCEPTANCE OF FINAL PAYMENT CONSTITUTES RELEASE

The acceptance by the CONTRACTOR of the final payment shall release the OWNER and the ENGINEER, as representatives of the OWNER, from all claims and all liability to the CONTRACTOR for all things done or furnished in connection with the work, and every act of the OWNER and others relating to or arising out of the work except claims Previously made in writing and still unsettled. No payment, however, final or otherwise, shall operate to release the CONTRACTOR or his Sureties from obligations under this Contract and the Performance Bond, Payment Bond, and other bonds and warranties, as herein provided.

SUPPLEMENTARY CONDITIONS

REVISIONS AND ADDITIONS TO THE GENERAL CONDITIONS

The General Conditions are hereby revised as follows:

ARTICLE 9 "ENGINEER"

Add the following:

Wherever in these Documents the word "Engineer" appears, it shall be understood to mean the City Engineer or his/her authorized representative, who will perform the Contract administrative and field inspections as authorized agents of the Owner.

ARTICLE 12 "OWNER"

Add the following:

Wherever in these Documents the word "Owner" appears, it shall be understood to mean the City of Key West whose address is 3140 Flagler Avenue, P.O. Box 1409, Key West, Florida 33041-1409.

ARTICLE 14 "SPECIFICATIONS"

Add the following:

FEDERAL, STATE, COUNTY, AND LOCAL STANDARD SPECIFICATIONS

Where portions of the work traverse or cross federal, state, county, or local highways, roads, or streets, and the agency in control of such Property has established standard specifications governing items of work that differ from these Specifications, the most stringent requirements shall apply.

The Contractor shall comply with all regulations and requirements of the Florida Department of Transportation and the County Road Department wherever the work traverses or crosses state or county highways.

ARTICLE 29 "LINES AND GRADES"

Add the following:

It will be the Contractor's responsibility to layout the work and to transfer elevations from benchmarks. Where new construction connects to existing facilities, the Contractor shall check and establish the exact location prior to construction of the facilities.

The Contractor shall furnish all surveys, labor, and equipment, including setting all alignment and gradient, grade stakes, batter boards, and everything necessary to lay out his work. The Contractor shall be responsible for maintaining and re-establishing at his expense, all control points. After completion of his construction, he shall reset all permanent monuments at their original locations and elevations through the use of registered surveys.

Layout work may be checked by the Engineer, and the Contractor shall furnish all necessary labor, equipment, and materials, and shall cooperate and assist the Engineer in making such checks.

The dimensions for lines and elevations for grades of the structures, appurtenances, and utilities will be shown on Drawings attached to each Work Order, together with other pertinent information required for laying out the work. If site conditions vary from those indicated, the Contractor shall notify the Engineer immediately, who will make any minor adjustment as required.

ARTICLE 34 "INSURANCE & LIABILITY"

Delete Articles 34. A., B., C. & D. and substitute with the following:

Contractor shall maintain limits no less than those stated below:

CONTRACTOR is to secure, pay for, and file with the City of Key West, prior to commencing any work under the Contract, all certificates for workers' compensation, public liability, and property damage liability insurance, and such other insurance coverages as may be required by specifications and addenda thereto, in at least the following minimum amounts with specification amounts to prevail if greater than minimum amounts indicated. Notwithstanding any other provision of the Contract, the CONTRACTOR shall provide the minimum limits of liability insurance coverage as follows:

Auto Liability	$1,000,000	Combined Single Limit
General Liability	$2,000,000	Aggregate (Per Project)
	$2,000,000	Products Aggregate
	$1,000,000	Any One Occurrence
	$2,000,000	Personal Injury
	$ 300,000	Fire Damage/Legal
Additional Umbrella Liability	$2,000,000	Occurrence / Aggregate

CONTRACTOR shall furnish an original Certificate of Insurance indicating, and such policy providing coverage to, City of Key West named as an additional insured on a PRIMARY and NON CONTRIBUTORY basis utilizing an ISO standard endorsement at least as broad as CG 2010 (11/85) or its equivalent, (combination of CG 20 10 07 04 and CG 20 37 07 04, providing coverage for completed operations, is acceptable) including a waiver of subrogation clause in favor of City of Key West on all policies. CONTRACTOR will maintain the General Liability and Umbrella Liability insurance coverages summarized above with coverage continuing in full force including the additional insured endorsement until at least 3 years beyond completion and delivery of the work contracted herein.

Notwithstanding any other provision of the Contract, the CONTRACTOR shall maintain complete workers' compensation coverage for each and every employee, principal, officer, representative, or agent of the CONTRACTOR who is performing any labor, services, or material under the Contract. Further, CONTRACTOR shall additionally maintain the following minimum limits of coverage:

Bodily Injury Each Accident	$1,000,000
Bodily Injury by Disease Each Employee	$1,000,000
Bodily Injury by Disease Policy Limit	$1,000,000

If the work is being done on or near a navigable waterway, CONTRACTOR's workers compensation policy shall be endorsed to provide USL&H Act (WC 00 01 06 A) and Jones Act (WC 00 02 01 A) coverage if specified by the City of Key West. CONTRACTOR shall provide the City of Key West with a Certificate of Insurance verifying compliance with the workman's compensation coverage as set forth herein and shall provide as often as required by the City of Key West such certification which shall also show the insurance company, policy number, effective and expiration date, and the limits of workman's compensation coverage under each policy.

CONTRACTOR's insurance policies shall be endorsed to give 30 days' written notice to the City of Key West in the event of cancellation or material change, using form CG 02 24, or its equivalent.

Certificates of Insurance submitted to the City of Key West will not be accepted without copies of the endorsements being requested. This includes additional insured endorsements, cancellation/material change notice endorsements, and waivers of subrogation. Copies of USL&H Act and Jones Act endorsements will also be required if necessary. PLEASE ADVISE YOUR INSURANCE AGENT ACCORDINGLY.

CONTRACTOR will comply with any and all safety regulations required by any agency or regulatory body including but not limited to OSHA. CONTRACTOR will notify City of Key West immediately by telephone at (305) 809-3867 any accident or injury to anyone that occurs on the jobsite and is related to any of the work being performed by the CONTRACTOR.

Add the following Article:

G. SURETY AND INSURER QUALIFICATIONS

All bonds, insurance contracts, and certificates of insurance shall be either executed by or countersigned by a licensed resident agent of the Surety or insurance company, having his place of business in the State of Florida, and in all ways complying with the insurance laws of the State of Florida. Further, the said Surety or Insurance Company shall be duly licensed and qualified to do business in the State of Florida. If requested, Contractor shall Provide Proof of Florida Licensure for all insurance companies. The City of Key West shall be named as Additional Insured on the insurance certificates.

ACORD™ CERTIFICATE OF LIABILITY INSURANCE

DATE (MM/DD/YYYY)

THIS CERTIFICATE IS ISSUED AS A MATTER OF INFORMATION ONLY AND CONFERS NO RIGHTS UPON THE CERTIFICATE HOLDER. THIS CERTIFICATE DOES NOT AFFIRMATIVELY OR NEGATIVELY AMEND, EXTEND OR ALTER THE COVERAGE AFFORDED BY THE POLICIES BELOW. THIS CERTIFICATE OF INSURANCE DOES NOT CONSTITUTE A CONTRACT BETWEEN THE ISSUING INSURER(S), AUTHORIZED REPRESENTATIVE OR PRODUCER, AND THE CERTIFICATE HOLDER.

IMPORTANT: If the certificate holder is an ADDITIONAL INSURED, the policy(ies) must be endorsed. If SUBROGATION IS WAIVED, subject to the terms and conditions of the policy, certain policies may require an endorsement. A statement on this certificate does not confer rights to the certificate holder in lieu of such endorsement(s).

PRODUCER	CONTACT NAME:	
	PHONE (A/C, No, Ext):	FAX (A/C, No):
	E-MAIL ADDRESS:	
	INSURER(S) AFFORDING COVERAGE	NAIC #
	INSURER A :	
INSURED **Vendor Sample**	INSURER B :	
	INSURER C :	
	INSURER D :	
	INSURER E :	
	INSURER F :	

COVERAGES **CERTIFICATE NUMBER:** **REVISION NUMBER:**

THIS IS TO CERTIFY THAT THE POLICIES OF INSURANCE LISTED BELOW HAVE BEEN ISSUED TO THE INSURED NAMED ABOVE FOR THE POLICY PERIOD INDICATED. NOTWITHSTANDING ANY REQUIREMENT, TERM OR CONDITION OF ANY CONTRACT OR OTHER DOCUMENT WITH RESPECT TO WHICH THIS CERTIFICATE MAY BE ISSUED OR MAY PERTAIN, THE INSURANCE AFFORDED BY THE POLICIES DESCRIBED HEREIN IS SUBJECT TO ALL THE TERMS, EXCLUSIONS AND CONDITIONS OF SUCH POLICIES. LIMITS SHOWN MAY HAVE BEEN REDUCED BY PAID CLAIMS.

INSR LTR	TYPE OF INSURANCE	ADDL INSR	SUBR WVD	POLICY NUMBER	POLICY EFF (MM/DD/YYYY)	POLICY EXP (MM/DD/YYYY)	LIMITS	
	GENERAL LIABILITY						EACH OCCURRENCE	$1,000,000
	X COMMERCIAL GENERAL LIABILITY						DAMAGE TO RENTED PREMISES (Ea occurrence)	$300,000
	CLAIMS-MADE X OCCUR	X	X				MED EXP (Any one person)	$
							PERSONAL & ADV INJURY	$1,000,000
							GENERAL AGGREGATE	$2,000,000
	GEN'L AGGREGATE LIMIT APPLIES PER: POLICY PRO-JECT LOC						PRODUCTS - COMP/OP AGG	$2,000,000
								$
	AUTOMOBILE LIABILITY						COMBINED SINGLE LIMIT (Ea accident)	$1,000,000
	X ANY AUTO						BODILY INJURY (Per person)	$
	ALL OWNED AUTOS / SCHEDULED AUTOS	X	X				BODILY INJURY (Per accident)	$
	X HIRED AUTOS / X NON-OWNED AUTOS						PROPERTY DAMAGE (Per accident)	$
								$
	X UMBRELLA LIAB X OCCUR						EACH OCCURRENCE	$,000,000
	EXCESS LIAB CLAIMS-MADE	X	X				AGGREGATE	$,000,000
	DED X RETENTION $							$
	WORKERS COMPENSATION AND EMPLOYERS' LIABILITY						X WC STATU-TORY LIMITS / OTH-ER	
	ANY PROPRIETOR/PARTNER/EXECUTIVE OFFICER/MEMBER EXCLUDED? Y/N N (Mandatory in NH) If yes, describe under DESCRIPTION OF OPERATIONS below	N/A	X				E.L. EACH ACCIDENT	$1,000,000
							E.L. DISEASE - EA EMPLOYEE	$1,000,000
							E.L. DISEASE - POLICY LIMIT	$1,000,000
	Professional Liability (if applicable)						**Per Claim**	$1,000,000
							Aggregate	$1,000,000

DESCRIPTION OF OPERATIONS / LOCATIONS / VEHICLES (Attach ACORD 101, Additional Remarks Schedule, if more space is required)

CERTIFICATE HOLDER

City of Key West
P.O. Box 1409
Key West, FL 33041-1409

CANCELLATION

SHOULD ANY OF THE ABOVE DESCRIBED POLICIES BE CANCELLED BEFORE THE EXPIRATION DATE THEREOF, NOTICE WILL BE DELIVERED IN ACCORDANCE WITH THE POLICY PROVISIONS.

AUTHORIZED REPRESENTATIVE

© 1988-2010 ACORD CORPORATION. All rights reserved.

THIS ENDORSEMENT CHANGES THE POLICY. PLEASE READ IT CAREFULLY.

ADDITIONAL INSURED – OWNERS, LESSEES OR CONTRACTORS – AUTOMATIC STATUS WHEN REQUIRED IN CONSTRUCTION AGREEMENT WITH YOU

This endorsement modifies insurance provided under the following:

COMMERCIAL GENERAL LIABILITY COVERAGE PART

A. **Section II – Who Is An Insured** is amended to include as an additional insured any person or organization for whom you are performing operations when you and such person or organization have agreed in writing in a contract or agreement that such person or organization be added as an additional insured on your policy. Such person or organization is an additional insured only with respect to liability for "bodily injury", "property damage" or "personal and advertising injury" caused, in whole or in part, by:

1. Your acts or omissions; or
2. The acts or omissions of those acting on your behalf;

in the performance of your ongoing operations for the additional insured.

A person's or organization's status as an additional insured under this endorsement ends when your operations for that additional insured are completed.

B. With respect to the insurance afforded to these additional insureds, the following additional exclusions apply:

This insurance does not apply to:

1. "Bodily injury", "property damage" or "personal and advertising injury" arising out of the rendering of, or the failure to render, any professional architectural, engineering or surveying services, including:
   a. The preparing, approving, or failing to prepare or approve, maps, shop drawings, opinions, reports, surveys, field orders, change orders or drawings and specifications; or
   b. Supervisory, inspection, architectural or engineering activities.
2. "Bodily injury" or "property damage" occurring after:
   a. All work, including materials, parts or equipment furnished in connection with such work, on the project (other than service, maintenance or repairs) to be performed by or on behalf of the additional insured(s) at the location of the covered operations has been completed; or
   b. That portion of "your work" out of which the injury or damage arises has been put to its intended use by any person or organization other than another contractor or subcontractor engaged in performing operations for a principal as a part of the same project.

© ISO Properties, Inc., 2004

POLICY NUMBER:

COMMERCIAL GENERAL LIABILITY
CG 20 10 07 04

THIS ENDORSEMENT CHANGES THE POLICY. PLEASE READ IT CAREFULLY.

ADDITIONAL INSURED – OWNERS, LESSEES OR CONTRACTORS – SCHEDULED PERSON OR ORGANIZATION

This endorsement modifies insurance provided under the following:

COMMERCIAL GENERAL LIABILITY COVERAGE PART

SCHEDULE

Name Of Additional Insured Person(s) Or Organization(s):	Location(s) Of Covered Operations
Information required to complete this Schedule, if not shown above, will be shown in the Declarations.	

A. **Section II – Who Is An Insured** is amended to include as an additional insured the person(s) or organization(s) shown in the Schedule, but only with respect to liability for "bodily injury", "property damage" or "personal and advertising injury" caused, in whole or in part, by:

1. Your acts or omissions; or
2. The acts or omissions of those acting on your behalf;

in the performance of your ongoing operations for the additional insured(s) at the location(s) designated above.

B. With respect to the insurance afforded to these additional insureds, the following additional exclusions apply:

This insurance does not apply to "bodily injury" or "property damage" occurring after:

1. All work, including materials, parts or equipment furnished in connection with such work, on the project (other than service, maintenance or repairs) to be performed by or on behalf of the additional insured(s) at the location of the covered operations has been completed; or
2. That portion of "your work" out of which the injury or damage arises has been put to its intended use by any person or organization other than another contractor or subcontractor engaged in performing operations for a principal as a part of the same project.

© ISO Properties, Inc., 2004

POLICY NUMBER:

COMMERCIAL GENERAL LIABILITY
CG 20 37 07 04

THIS ENDORSEMENT CHANGES THE POLICY. PLEASE READ IT CAREFULLY.

ADDITIONAL INSURED – OWNERS, LESSEES OR CONTRACTORS – COMPLETED OPERATIONS

This endorsement modifies insurance provided under the following:

COMMERCIAL GENERAL LIABILITY COVERAGE PART

SCHEDULE

Name Of Additional Insured Person(s) Or Organization(s):	Location And Description Of Completed Operations
Information required to complete this Schedule, if not shown above, will be shown in the Declarations.	

Section II – Who Is An Insured is amended to include as an additional insured the person(s) or organization(s) shown in the Schedule, but only with respect to liability for "bodily injury" or "property damage" caused, in whole or in part, by "your work" at the location designated and described in the schedule of this endorsement performed for that additional insured and included in the "products-completed operations hazard".

© ISO Properties, Inc., 2004

THIS ENDORSEMENT CHANGES THE POLICY. PLEASE READ IT CAREFULLY.

EARLIER NOTICE OF CANCELLATION PROVIDED BY US

Number of Days Notice 30

For any statutorily permitted reason **other than nonpayment of premium**, the number of days required for notice of cancellation is increased to the number of days shown in the Schedule above.

If this policy is cancelled by us we will send the Named Insured and any party listed in the following schedule notice of cancellation based on the number of days notice shown above.

Schedule

Name of Person or Organization

Mailing Address

POLICY NUMBER:

COMMERCIAL GENERAL LIABILITY
CG 24 04 05 09

WAIVER OF TRANSFER OF RIGHTS OF RECOVERY AGAINST OTHERS TO US

This endorsement modifies insurance provided under the following:

COMMERCIAL GENERAL LIABILITY COVERAGE PART
PRODUCTS/COMPLETED OPERATIONS LIABILITY COVERAGE PART

SCHEDULE

Name Of Person Or Organization:
Information required to complete this Schedule, if not shown above, will be shown in the Declarations.

The following is added to Paragraph **8. Transfer Of Rights Of Recovery Against Others To Us** of **Section IV – Conditions:**

We waive any right of recovery we may have against the person or organization shown in the Schedule above because of payments we make for injury or damage arising out of your ongoing operations or "your work" done under a contract with that person or organization and included in the "products-completed operations hazard". This waiver applies only to the person or organization shown in the Schedule above.

© Insurance Services Office, Inc., 2008

WAIVER OF OUR RIGHT TO RECOVER FROM OTHERS ENDORSEMENT

We have the right to recover our payments from anyone liable for an injury covered by this policy. We will not enforce our right against the person or organization named in the Schedule. (This agreement applies only to the extent that you perform work under a written contract that requires you to obtain this agreement from us.)

This agreement shall not operate directly or indirectly to benefit anyone not named in the Schedule.

Schedule

This endorsement changes the policy to which it is attached and is effective on the date issued unless otherwise stated.

(The information below is required only when this endorsement is issued subsequent to preparation of the policy.)

Endorsement
Insured

Effective Policy No.

Endorsement No.
Premium

Insurance Company

Countersigned by_____

© 1983 National Council on Compensation Insurance.

ARTICLE 35 "INDEMNITY"

Delete Text for Article 35 "INDEMNITY" in its entirety and substitute the following:

To the fullest extent permitted by law, the CONTRACTOR expressly agrees to indemnify and hold harmless the City of Key West, their officers, directors, agents, and employees (herein called the "indemnitees") from liabilities, damages, losses and costs, including, but not limited to, reasonable attorney's fees and court costs, such legal expenses to include costs incurred in establishing the indemnification and other rights agreed to in this Paragraph, to persons or property, to the extent caused by the negligence, recklessness, or intentional wrongful misconduct of the CONTRACTOR, its Subcontractors or persons employed or utilized by them in the performance of the Contract. Claims by indemnitees for indemnification shall be limited to the amount of CONTRACTOR's insurance or $1 million per occurrence, whichever is greater. The parties acknowledge that the amount of the indemnity required hereunder bears a reasonable commercial relationship to the Contract and it is part of the project specifications or the bid documents, if any. The indemnification obligations under the Contract shall not be restricted in any way by any limitation on the amount or type of damages, compensation, or benefits payable by or for the CONTRACTOR under workers' compensation acts, disability benefits acts, or other employee benefits acts, and shall extend to and include any actions brought by or in the name of any employee of the CONTRACTOR or of any third party to whom CONTRACTOR may subcontract a part or all of the Work. This indemnification shall continue beyond the date of completion of the work.

ARTICLE 39 "CODES, ORDINANCES, PERMITS, AND LICENSES"

Add the following:

A. PERMIT FOR WORK WITHIN LOCAL RIGHTS-OF-WAY

For each Work Order issued, the Contractor shall obtain from the City of Key West the necessary permits for work within the rights-of-way. The Contractor shall abide by all regulations and conditions, including maintenance of traffic. Permit fees will be waived by the City for work within the City's rights-of way.

B. NOISE ORDINANCE

City of Key West has a noise ordinance that allows working hours between 8:00 AM to 7:00 PM, Monday through Friday. No work should be performed during weekends or City Holidays, State Holidays and National Holidays. Any construction operations outside these hours and these days will require a variance from the City of Key West Commission.

C. "LICENSES"

THE BIDDER MUST BE A LICENSED CONTRACTOR BY THE STATE OF FLORIDA AND SUBMIT PROOF OF SUCH WITH THE BID.

1. Within 10 days of Notice of Award, the successful Bidder must represent that he holds all applicable, county, and City of Key West licenses and permits required to do business as a contractor with respect to the work described in the Contract Documents.

2. Further, the successful Bidder must, within 10 days of Notice of Award, furnish documentation showing that, as a minimum, he has complied with the provisions of Chapter 18 of the Code of Ordinances of the City of Key West in order to enter into the Agreement contained in the Contract Documents.

3. Specifically, within 10 days after Notice of Award, the successful Bidder must demonstrate that he holds, as a minimum, the following licenses and certificates:

   a.) City of Key West Tax License Receipt;
   b.) A valid Certificate of Competency issued by the Chief Building Official of Key West, Florida
   c.) A valid occupational license issued by the City of Key West, Florida.

D. WORK DURING HOLIDAYS

There shall be no work during City Holidays, State Holidays and National Holidays. Any construction operations during these days shall be approved by the City of Key West.

ARTICLE 40 "SUPERENTENDENCE"

Add the following sub article:

The CONTRACTOR shall keep at the project site, competent supervisory personnel, able to read, write and speak English to effectively communicate with City staff.

ARTICLE 42 "SAFETY"

Add the following sub article:

OCCUPATIONAL SAFETY AND HEALTH

The Contractor shall observe and comply with all applicable local, state, and federal occupational safety and health regulations during the prosecution of work under this Contract. In addition, full compliance by the Contractor with the U.S. Department of Labor's Occupational Safety and Health Standards, as established in Public Law 91-596, will be required under the terms of this Contract.

ARTICLE 43 "PROTECTION OF WORK AND PROPERTY"

Add the following Article:

HISTORIC PRESERVATION

The Contractor shall comply with Florida's Archives and Historic Act (Florida Statutes, Chapter 267) and the regulations of the local historic preservation board as applicable and protect against the potential loss or destruction of significant historical or archaeological data, sites, and properties in connection with the project.

ARTICLE 57 “OWNERS RIGHT TO TRANSFER EMPLOYMENT”

Add the following Article:

TERMINATION FOR CONVENIENCE AND RIGHT OF SUSPENSION

A. Owner shall have the right to terminate this Contract without cause by written notice of Termination to the Contractor. In the event of such termination for convenience, the Contractor’s recovery against the Owner shall be limited to that portion of the Contract amount earned through the date of termination, together with any retainage withheld and reasonable termination expenses incurred. Contractor shall not be entitled to any other or further recovery against the Owner, including, but not limited to, damages or any anticipated profit on portions of the Work not performed.

B. The Owner shall have the right to suspend all or any portions of the Work upon giving the Contractor prior written notice of such suspension. If all or any portion of the Work is so suspended, the Contractor shall be entitled to reasonable costs, expenses and time extension associated with the suspension.

ARTICLE 60 "LIQUIDATED DAMAGES"

Delete Article "LIQUIDATED DAMAGES" in its entirety and substitute the following:
LIQUIDATED DAMAGES

Should the Contractor fail to complete the work or any part thereof (e.g., individual Work Order) in the time agreed upon in the Contract Documents or within such extra time as may have been allowed for delays by extensions granted as provided in the Contract, the Contractor shall reimburse the Owner for the additional expense and damage for each calendar day, Sundays and legal holidays included, that project outlined in Contract Documents remains uncompleted after the completion date. Liquidated damages shall be assessed. It is agreed that the amount of such additional expense and damage incurred by reason of failure to complete the work is the per diem rate as stipulated in the Proposal. The said amount is hereby agreed upon as a reasonable estimate of the costs which may be accrued by the Owner after the expiration of the time of completion. It is expressly understood and agreed that this amount is not to be considered in the nature of a penalty but as liquidated damages, which have accrued against the Contractor. The Owner shall have the right to deduct such damages from any amount due or that may become due the Contractor or the amount of such damages shall be due and collectible from the Contractor or Surety.

ARTICLE 68 “PAYMENT”

Sub article C. “COST REIMBURSEMENT WORK”

Delete the third & fourth paragraph in its entirety & substitute the following;

In addition to 1 through 5 above , an added fixed fee of 15 percent (%) for general overhead & profit shall be allowed for the CONTRACTOR (or approved SUBCONTRACTOR) actually executing the Cost Reimbursement work.

An additional fixed fee of 5 % will be allowed the CONTRACTOR for the administrative handling of portions of the work that are executed by an approved SUBCONTRACTOR. No additional fixed fee will be allowed for the administrative handling of work executed by the SUBCONTRACTOR of a SUBCONTRACTOR.

ARTICLE 69 "PARTIAL PAYMENTS"

Delete the first paragraph of Sub article B. "ESTIMATE" and substitute the following:

No more than once each month the Contractor shall submit to the Engineer a detailed estimate of the amount earned during the preceding month for the separate portions of the work and request payment. As used in this Article the words "amount earned" means the value, on the date of the estimate, for partial payment of the work completed in accordance with the Contract Documents and the value of approved materials delivered to the project site suitably stored and protected prior to incorporation into the work. Payment will be made by the Owner to the Contractor within 40 days receipt of the written recommendation of payment from the Engineer.

Sub Article C. "DEDUCTION FROM ESTIMATE

Delete fourth sentence in its entirety and substitute add the following;

1. The OWNER shall hold retainage for an individual Work Order until such time as work associated with that Work Order is deemed complete by the OWNER.

Delete Sub article E. "PAYMENT" in its entirety and substitute the following:

After deducting the retainage and the amount of all previous partial payments made to the Contractor from the amount earned the amount due will be made payable to the Contractor. Recommendations for payment received by the Owner less than 40 days prior to the scheduled day for payment will not be processed or paid until the following month.

ARTICLE 72 "FINAL PAYMENT"

Delete Article "FINAL PAYMENT" in its entirety and substitute the following:

FINAL PAYMENT

Upon completion of the an individual Work Order, the Contractor shall notify the Engineer, in writing, that he has completed it and shall request final payment for that Work Order. The Contractor shall be responsible for keeping an accurate and detailed record of his actual construction. Upon completion of construction and before final acceptance and payment the Contractor shall furnish the Engineer as-built drawings of his construction. Upon receipt of a request for final payment and the as-built drawings the Engineer will inspect and, if acceptable, submit to the Owner his recommendation as to acceptance of the completed work and as to the final estimate of the amount due the Contractor. Upon approval of this final estimate by the Owner and compliance by the Contractor with provisions in Article RELEASE OF LIENS OR CLAIMS, and other provisions as may be applicable, the Owner shall pay to the Contractor all monies due him under the provisions of these Contract Documents.

END OF SECTION

PART 4

SPECIFICATIONS

DIVISION 1

GENERAL REQUIREMENTS

SECTION 01001
GENERAL REQUIREMENTS

PART 1 PROJECT DESCRIPTION

1.1 GENERAL

A. A brief description of the work is stated in the Invitation to Bid. The full scope of assigned work orders shall coordinate the applicable information in the several parts of these Contract Documents.

B. The work under this Contract shall be performed by the CONTRACTOR as required by the OWNER. Work will be authorized in the form of a Work Order issued to the CONTRACTOR. The Work Order will include a description of the project and may include Drawings and other data to define the scope and details of the work. The CONTRACTOR will receive a Notice to Proceed with the work authorized by each Work Order. The CONTRACTOR shall complete all work in the Work Order within the number of calendar days stipulated in that particular Work Order unless an extension in the time of completion is granted by the ENGINEER, as stated in the Instructions to Bidders. Upon completion of the work in each Work Order and compliance with applicable provisions in the Contract Documents the CONTRACTOR will receive final payment for all work done under that Work Order.

C. The following additional information, though not all-inclusive, is given to assist CONTRACTORs in their evaluation of the work required to meet the project objectives.

D. This project will provide the OWNER with: Miscellaneous underground and infrastructure repair and replacement, as directed by the OWNER over the period of two (2) years.

E. The work is likely to be influenced by the tides. The tides can have an effect on the timing and work schedule. No extra claims shall be made for the tides or for other natural causes.

F. The CONTRACTOR shall become familiar with the existing operating conditions of the OWNER's storm and sewage collection system and pumping stations, beaches, roads and facilities and take such into consideration in planning and scheduling work. No extra claims shall be made for work required to achieve conditions beyond those obtainable under normal operation of the existing collection and pumping facilities necessary to accomplish the work.

1.2 FDOT SPECIFICATIONS

A. Portions of The Florida Department of Transportation Standard Specifications for Road and Bridge Construction and their Roadway and Traffic Design Standards, hereinafter referred to as the FDOT Specifications, are referred to herein and amended, in part, and the same are hereby made a part of this Contract to the extent of such references and shall be

as binding upon the Contract as though reproduced herein. Such reference shall mean the current edition, including all supplements. In case of a conflict in the requirements of the FDOT Specifications and the requirements stated herein, the requirements herein shall prevail.

1.3 ENGINEER

A. The ENGINEER for this project is the Civil Engineer, City of Key West, Florida.

PART 2 SEQUENCE OF OPERATIONS

2.1 MOBILIZATION AND DEMOBILIZATION

A. CONTRACTOR shall be responsible for mobilization and demobilization of labor, materials and equipment. Payment for mobilization and demobilization will be based on the unit price indicated in the Proposal for mobilization and demobilization for each Work Order.

B. Because of the need to mobilize quickly, the CONTRACTOR shall maintain a yard within the Lower Keys (west of the Seven-Mile Bridge) and shall have all equipment available at that site. If the CONTRACTOR does not have this equipment at his yard, he may obtain it by lease, rent, subcontract, or from another site within his company as required by Work Order as long as the equipment is available within 4 calendar days after receiving notice to do the work.

2.2 SCHEDULING

A. Plan the work and carry it out with minimum interference to the operation of the existing facilities. Prior to starting the work confer with the ENGINEER and OWNER's representative to develop an approved work schedule which will permit the facilities to function normally as practical. It may be necessary to do certain parts of the construction work outside normal working hours in order to avoid undesirable conditions. The CONTRACTOR shall do this work at such times and at no additional cost to the OWNER. Do not make connections between existing work and new work until necessary inspection and tests have been completed on the new work and it is found to conform in all respects to the requirements of the Contract Documents.

B. Work on existing structures and facilities shall be performed on a schedule and in a manner that will permit the existing facility to operate continuously.

C. In order to meet the overall objectives of a project certain elements of work may have to be completed or substantially completed in a given sequence that will be identified in the applicable Work Order.

D. No work shall be started until the CONTRACTOR has sufficient manpower, equipment, and material to complete the project. No work shall commence without express consent of the ENGINEER.

2.3 COORDINATION

A. CONTRACTORs shall cooperate in the coordination of their separate activities in a manner that will provide the least interference with the OWNER's operations and other CONTRACTORs and utility companies working in the area and in the interfacing and connection of the separate elements of the overall project work.

B. If any difficulty or dispute should arise in the accomplishment of the above, the problem shall be brought immediately to the attention of the ENGINEER.

C. All CONTRACTORs working on the site are subject to this requirement for cooperation and all shall abide by the ENGINEER's decision in resolving project coordination problems without additional cost to the OWNER.

2.4 SHUTDOWN OF EXISTING OPERATIONS OR UTILITY

A. Continuous operation of the OWNER's existing sewer system is of critical importance. The CONTRACTOR's operation shall not result in the interruption of sewage, water, or solid waste service to any customers.

B. Connections to existing services or utility or other work that requires the temporary shutdown of any existing operations or utility shall be planned in detail with appropriate scheduling of the work and coordinated with the OWNER or ENGINEER. Advance notice shall be given in order that the OWNER or ENGINEER may witness the shutdown, tie-in, and startup. The temporary shutdown must be approved by the OWNER.

C. All materials and equipment (including emergency equipment) necessary to expedite the tie-in shall be on hand prior to the shutdown of existing services or utility.

2.5 OPERATION OF EXISTING SYSTEM PROHIBITED

A. At no time undertake to close off any lines or open valves or take any other action which would affect the operation of the existing system except as specifically required by the Drawings and Specifications and after approval is granted by the OWNER. Request approval 5 working days in advance of the time that interruption of the existing system is required.

B. Clean up construction debris, excess excavation, and excess materials. Completely restore fences, mailboxes, ditches, culverts, signposts, and similar items immediately following the work final backfilling.

PART 3 SITE CONDITIONS

3.1 SITE INVESTIGATION AND REPRESENTATION

A. The CONTRACTOR acknowledges satisfaction as to the general nature and location of the work, the general and local conditions, particularly those bearing upon availability of transportation, availability of labor, water, electric power, roads, and uncertainties of weather, river stages, or similar physical conditions, the character of equipment and facilities needed preliminary to and during the prosecution of the work, and all other matters which can in any way affect the work or the cost thereof under this contract.

B. Failure by the CONTRACTOR to become acquainted with the physical conditions and all the available information will not relieve the CONTRACTOR from responsibility for properly estimating the difficulty or cost of successfully performing the work.

C. The CONTRACTOR warrants that as a result of examination and investigation of all the aforesaid data, the CONTRACTOR can perform the work in a good and workmanlike manner and to the satisfaction of the OWNER. The OWNER assumes no responsibility for any representations made by any of it officers or agents during or prior to the execution of this Contract, unless (1) such representations are expressly stated in the Contract, and (2) the Contract expressly provides that the responsibility therefore is assumed by the OWNER.

3.2 INFORMATION ON SITE CONDITIONS

A. General: Any information obtained by the ENGINEER regarding site conditions, subsurface information, groundwater elevations, existing construction of site facilities as applicable and similar data will be available for inspection at the office of the ENGINEER upon request. Such information is offered as supplementary information only. Neither the ENGINEER nor the OWNER assumes any responsibility for the completeness or interpretation of such supplementary information.

3.3 SUBSURFACE INVESTIGATION

A. No test holes or borings have been made by the OWNER; however, any information the OWNER may have concerning subsurface conditions will be made available to the CONTRACTOR upon request.

The CONTRACTOR shall examine the applicable site upon receipt of each Work Order and may make arrangements with the OWNER to conduct his own subsurface investigation.

3.4 UTILITY

A. The CONTRACTOR shall be responsible for determining, at his cost, the locations and elevations of all utilites in each project areas and shall be responsible for contacting each utility for location and notification prior to commencing work.

3.5 CONTRACTOR'S RESPONSIBILITY FOR UTILITY PROPERTIES AND SERVICE

A. Where the CONTRACTOR's operations could cause damage or inconvenience to telephone, television, power, water, or sewer systems, the operations shall be suspended until all arrangements necessary for the protection of these utility and services have been made by the CONTRACTOR.

B. Notify all utility offices which are affected by the construction operation at least 48 hours in advance. Under no circumstances expose any utility without first obtaining permission from the appropriate agency. Once permission has been granted, locate, expose, and provide temporary support for all existing underground utility. Hand digging is required in the tolerance zone. If the CONTRACTOR fails to adhere to State Statutes and the Florida Administrative Code the appropriate law enforcement agencies will be contacted

C. The CONTRACTOR shall be solely and directly responsible to the OWNER and operators of such properties for any damage, injury, expense, loss inconvenience, delay, suits, actions, or claims of any character brought because of any injuries or damage which may result from the construction operations under this Contract.

D. Neither the OWNER nor its officers or agents shall be responsible to the CONTRACTOR for damages as a result of the CONTRACTOR's failure to protect utilities encountered in the work.

E. In the event of interruption to domestic water, sewer, storm drain, or other utility services as a result of accidental breakage due to construction operations, promptly notify the proper authority. Cooperate with said authority in restoration of service as promptly as possible and bear all costs of repair. In no case shall interruption of any water or utility service be allowed to exist outside working hours unless prior approval is granted.

F. In the event the CONTRACTOR encounters water service lines that interfere with the trenching he may, by obtaining prior approval of the property OWNER, Florida Keys Aqueduct Authority or Fire Department, as applicable, and the ENGINEER, cut the service, dig through, and restore the service with similar and equal materials at the CONTRACTOR's expense.

G. The CONTRACTOR shall replace, at his own expense, all existing utility or structures removed or damaged during construction unless otherwise provided for in these Contract documents or ordered by the ENGINEER.

3.6 INTERFERING STRUCTURES

A. Take necessary precautions to prevent damage to existing structures whether on the surface, aboveground, or underground.

B. Protect underground and above ground existing structures from damage, whether or not they lie within the limits of the easements obtained by the OWNER. Where such existing fences, gates, sheds, buildings, or any other structure must be removed in order to properly carry out the construction, or are damaged during construction, restore to their original condition to the satisfaction of the property OWNER involved at the CONTRACTOR's own expense. Notify the ENGINEER of any damaged underground structure and make repairs or replacements before backfilling.

C. Without additional compensation the CONTRACTOR may remove and replace in a condition as good as or better than original such small miscellaneous structures as fences, mailboxes, and signposts that interfere with the CONTRACTOR's operations.

3.7 FIELD RELOCATION

A. During the progress of construction it is expected that minor relocations of the work will be necessary. Such relocations shall be made only by direction of the ENGINEER. If existing structures are encountered which prevent the construction and which are not properly shown on any Work Order Drawings that may be issued, notify the ENGINEER before continuing with the construction that may be issued in order that the ENGINEER may make such field revisions as necessary to avoid conflict with the existing structures. If the CONTRACTOR shall fail to so notify the ENGINEER when an existing structure is encountered and shall proceed with the construction despite this interference he shall do so at his own risk.

3.8 LAND MONUMENTS:

A. The CONTRACTOR shall notify the ENGINEER prior to disturbing any existing federal, state, county, city, and private land monuments. CONTRACTOR shall hire a licensed land surveyor to research and reference all private and government land monuments prior to construction. Private and government land monuments shall be preserved or replaced by a licensed surveyor at the CONTRACTOR's expense. When government monuments are encountered the CONTRACTOR shall notify the ENGINEER at least 2 weeks in advance of the proposed construction in order that the ENGINEER will have ample opportunity to notify the proper authority to reference these monuments for later replacement.

PART 4 TEMPORARY CONSTRUCTION UTILITY AND FACILITIES

4.1 TEMPORARY WATER

A. The CONTRACTOR shall make his own arrangements to obtain suitable water and shall pay all costs.

4.2 TEMPORARY ELECTRIC POWER

A. The CONTRACTOR shall make arrangements to obtain and pay for electrical power used until final acceptance by the OWNER.

4.3 SAFETY REQUIREMENTS FOR TEMPORARY ELECTRIC POWER

A. Temporary electric power installation shall meet the construction safety requirements of OSHA, state and other governing agencies.

4.4 SANITARY FACILITIES

A. The CONTRACTOR shall provide and maintain sanitary facilities for his employees and his SUBCONTRACTORS' employees that will comply with the regulations of the local and state departments of health and as directed by the ENGINEER.

4.5 STORAGE OF MATERIALS

A. Materials shall be so stored as to ensure the preservation of their quality and fitness for the work. When considered necessary they shall be placed on wooden platforms or other hard, clean surfaces and not on the ground. Stored materials shall be located so as to facilitate prompt inspection. Private property shall not be used for storage purposes without the written permission of the OWNER or lessee.

B. Delicate instruments and materials subject to vandalism shall be placed under locked cover and, if necessary, provided with temperature control as recommended by the manufacturer.

PART 5 SAFETY AND CONVENIENCE

5.1 SAFETY EQUIPMENT

A. The CONTRACTOR shall do all work necessary to protect the general public from hazards, including but not limited to, surface irregularities or unramped grade changes in pedestrian sidewalk or walkway and trenches or excavations in roadway. Barricades, lanterns, and proper signs shall be furnished in sufficient amount to safeguard the public and the work. All barricades and signs shall be, in the opinion of the ENGINEER, clean and serviceable.

B. During construction the CONTRACTOR shall construct and at all times maintain satisfactory and substantial temporary chain link fencing, solid fencing, railing, barricades or steel plates, as applicable, at all openings, obstructions, or other hazards in streets sidewalks, floors, roofs, and walkways. All such barriers shall have adequate warning lights as necessary, or required, for safety. All lights shall be regularly maintained and in a fully operational state at all times.

5.2 ACCIDENT REPORTS

A. In addition, the CONTRACTOR must promptly report in writing to the ENGINEER all accidents whatsoever arising out of or in connection with the performance of the work whether on or adjacent to the site, giving full details and statements of witness. If death or serious

injuries or serious damages are caused, the accident shall be reported immediately by telephone or messenger to the ENGINEER.

B. If a claim is made by anyone against the CONTRACTOR or any SUBCONTRACTOR on account of any accident the CONTRACTOR shall promptly report the facts in writing to the ENGINEER, giving full details of the claim.

5.3 SAFE ACCESS BY FEDERAL, STATE, AND LOCAL GOVERNMENT OFFICIALS

A. Authorized representatives of the state, federal, or local governmental agencies shall at all times have safe access to the work and the CONTRACTOR shall provide proper facilities for such access and inspection. (i.e. hard hats, safety glasses, hearing protection)

5.4 TRAFFIC MAINTENANCE AND SAFETY

A. Provide traffic maintenance plans where required by federal, state, county, or local agencies having jurisdiction.

B. Comply with all rules and regulations of the state, county, and city authorities regarding closing or restricting the use of public streets or highways. No public or private road shall be closed, except by express permission of the OWNER. Conduct the work so as to assure the least possible obstruction to traffic and normal commercial pursuits. Protect all obstructions within traveled roadways by installing approved signs, barricades, and lights where necessary for the safety of the public. The convenience of the general public and residents adjacent to the project and the protection of person and property are of prime importance and shall be provided for in an adequate and satisfactory manner.

C. Where traffic will pass over trenches after they are backfilled and before they are paved, the top of the trench shall be maintained in a condition that will allow normal vehicular traffic to pass over. Temporary access driveways must be provided where required. Cleanup operations shall follow immediately behind backfilling and the worksite shall be kept in an orderly and clean condition at all times.

D. When flaggers and guards are required by regulation or when deemed necessary for safety, they shall be furnished with approved orange wearing apparel and other regulation traffic-control devices in accordance with FDOT provisions.

5.5 TRAFFIC CONTROL

A. Traffic control on all city, county and state highway rights-of-way shall meet the requirements of the Florida Department of Transportation Standard Specifications for Road and Bridge Construction, as well as FDOT Standard Details for Maintenance of Traffic, in accordance with The Manual for Uniform Traffic Control and Safe Practices.

B. The CONTRACTOR shall provide an 11 x 17 engineered drawing of his intended maintenance of traffic scheme to the ENGINEER for approval prior to commencement of work. This shall include barrier details, barricade type, and location.

5.6 PROTECTION OF PROPERTY

A. Protect stored materials located adjacent to the proposed work. Notify property OWNERs affected by the construction at least 48 hours in advance of the time construction begins. During construction operations construct and maintain such facilities as may be required to provide access by all property OWNERs to their property. No person shall be cut off from access to his residence or place of business for a period exceeding 8 hours unless the CONTRACTOR has made special arrangements with the affected persons.

B. The CONTRACTOR shall identify and isolate his work zone in such a manner as to exclude all personnel not employed by him, the ENGINEER, and the OWNER.

5.7 FIRE PREVENTION AND PROTECTION

A. The CONTRACTOR shall perform all work in a fire-safe manner. He shall supply and maintain on the site adequate fire-fighting equipment capable of extinguishing incipient fires. The CONTRACTOR shall comply with applicable federal, state, and local fire-prevention regulations. Where these regulations do not apply, applicable parts of the National Fire Prevention Standard for Safeguarding Building Construction Operations (NFPA No. 241) shall be followed.

5.8 ACCESS FOR POLICE, FIRE, AND POSTAL SERVICE

A. Notify the City ENGINEER and City Liaison a minimum of 48 hours before closing any street or portion thereof. No closing shall be made without the OWNER's approval. Notify said departments when the streets are again passable for emergency vehicles. Do not block off emergency vehicle access to consecutive arterial crossings or dead-end streets in excess of 300 linear feet without special written permission from City ENGINEER. Conduct operations with the least interference to fire equipment access, and at no time prevent such access.

B. The CONTRACTOR shall leave a night emergency telephone number or numbers with the police department, the ENGINEER and the OWNER, so that contact may be made easily at all times in case of barricade and flare trouble or other emergencies.

C. Maintain postal service facilities in accordance with the requirements of the U.S. Postal Service. Move mailboxes to temporary locations designated by the U.S. Postal Service, and at the completion of the work in each area, replace them in their original location and in a condition satisfactory to the U.S. Postal Service.

PART 6 PRESERVATION, RESTORATION, AND CLEANUP

6.1 SITE RESTORATION AND CLEANUP

A. At all times during the work keep the premises clean and orderly. Upon completion of the day's work repair all damage caused by equipment and leave the project clean and free of rubbish or excess materials of any kind.

B. Stockpile excavated materials in a manner that will cause the least damage to adjacent lawns, grassed areas, gardens, shrubbery, or fences, regardless of whether these are on private property or on state, county, or city rights-of-way. Remove all excavated materials from grassed and planted areas and leave these surfaces in a condition equivalent to their original condition. Replace top soiled areas raked and graded to conform to their original contours.

C. All existing drainage ditches and culverts shall be reopened and graded and natural drainage restored. Restore culverts broken or damaged to their original condition and location.

D. Upon completion of work hand-rake and drag all former grassed and planted areas, leaving all disturbed areas free from rocks, gravel, clay, or any other foreign material. The finished surface shall conform to the original surface, and shall be free-draining and free from holes, ruts, rough spots, or other surface features detrimental to a seeded area.

6.2 FINISHING OF SITE, BORROW, AND STORAGE AREAS

A. Upon completion of the project all areas used by the CONTRACTOR shall be properly cleared of all temporary structures, rubbish, and waste materials and properly graded to drain and blend in with the abutting property. Areas used for the deposit of waste materials shall be finished to properly drain and blend with the surrounding terrain.

6.3 STREET CLEANUP DURING CONSTRUCTION

A. Thoroughly clean all spilled dirt, gravel, or other foreign material caused by the construction operations from all streets and roads at the conclusion of each day's operation. Sidewalks, unless under construction, shall be kept clear of material and available for pedestrian use at all times.

6.4 DUST PREVENTION

A. Give all unpaved or disturbed streets, roads, detours or haul roads used in the construction areas an approved dust-preventive treatment or periodically water to prevent dust. Applicable environmental regulations for dust prevention shall be strictly enforced.

6.5 PRESERVATION OF IRRIGATION AND DRAINAGE DITCHES

A. After backfilling of the trenches restore all irrigation and storm drain ditches destroyed,

damaged or otherwise modified during construction to a condition equivalent, in the opinion of the ENGINEER, to the condition of the ditch before construction. Ditches so reconstructed shall be built in their original locations.

PART 7 SUBMITTALS DURING CONSTRUCTION

7.1 GENERAL

A. Requirements in this section are in addition to any specific requirements for submittals specified in other sections of these Contract Documents.

B. Submittals to the ENGINEER shall be addressed to:

Attn: Janet Muccino, Project Manager
Engineering Services, City of Key West
P.O. Box 1409
Key West, Florida 33041-1409

C. Submitted data shall be fully sufficient in detail for determination of compliance with the Contract Documents.

D. Review, acceptance, or approval of substitutions, schedules, shop drawings, lists of materials, and procedures submitted or requested by the CONTRACTOR shall not add to the Contract amount and all additional costs which may result there from shall be solely the obligation of the CONTRACTOR.

E. It shall not be the responsibility of the OWNER to provide Engineering or other services to protect the CONTRACTOR from additional costs accruing from such approvals.

F. No equipment or material for which listings, drawings, or descriptive material is required shall be installed until the ENGINEER has on hand copies of such approved lists and the appropriately stamped final shop drawings.

G. The review of drawings by the ENGINEER will be limited to general design requirements only and shall in no way relieve the CONTRACTOR from responsibility for errors or omissions contained therein.

H. Submittals will be acted upon by the ENGINEER as promptly as possible and returned to the CONTRACTOR not later than 20 working days.

I.A sample of requirements for submittals are:

1. All MSDS data forms.
2. Complete manufacturer's specifications, including materials description and paint system.

3. Suggested spare parts list with current price information.
4. List of special tools required for checking, testing, parts replacement, and maintenance. (Special tools are those which have not been customarily and routinely carried by maintenance mechanics.)
5. Samples of finish colors for selection.
6. Special handling instructions.
7. Requirements for storage and protection prior to installation.
8. Requirements for routine maintenance as well as three copies of all Maintenance Manuals needed to allow the OWNER to operate and/or maintain the installed device.
9. A copy of the manufacturer's warranty on all equipment and material installed, providing for the warranty period to commence on the date of final acceptance by the OWNER.
10. All products installed with each Work Order.

J. The submittals shall include satisfactory identification of items, units and assemblies in relation to the specification section number and the system or equipment identification or tag number shown on the Work Order drawings or as provided in the applicable specification section.

K. Should the CONTRACTOR propose any item on his shop drawings or incorporate an item into the work and that item should subsequently prove to be defective or otherwise unsatisfactory, (regardless of the ENGINEER's preliminary review), the CONTRACTOR shall, at his own expense replace the item with another item that will perform satisfactorily.

7.1.5 SUBMITTALS FOR WORK ORDERS

Submittals required for specific Work Orders shall be provided within 7 days of Work Order approval.

7.2 FINAL SHOP DRAWINGS TO BE SUBMITTED TO OWNER

Complete sets of reproducible final shop drawings shall be submitted to the OWNER before or at the time of delivery of equipment to the site.

7.3 FINAL AS-BUILT OR RECORD DRAWINGS

The CONTRACTOR shall submit AutoCAD as-built drawings certified by a Licensed Surveyor on CD for each Work Order. These Drawings shall be submitted before final completion and payment for that Work Order can be certified.

A. All supplied data collections, as-builts, drawings and files to be compatible with esri ArcGIS 10.2.2 Software. The OWNER's current computing environment consists of *Microsoft SQL Server - Windows 7/Server 2008 - ESRI GIS Platform*.

B. Interfaces and Integrations:

1. The City of Key West uses a number of software applications critical to its core operation and mission. The proposed mobile asset data collection solution will need to interface or integrate with these existing platforms. - Arc Collector-ArcGIS Online - ArcMap 10.2

END OF SECTION

SECTION 01014
ENVIRONMENTAL PROTECTION

PART 1 GENERAL

A. The CONTRACTOR shall maintain all work areas within and outside the project boundaries free from environmental pollution that would be in violation to any federal, state, or local regulations.

PART 2 PROTECTION OF SEWERS

A. Take adequate measures to prevent the impairment of the operation of the existing sewer system. Prevent construction material, pavement, concrete, earth, or other debris from entering a sewer or sewer structure.

PART 3 PROTECTION OF WATERWAYS

A. The CONTRACTOR shall observe the rules and regulations of the State of Florida and agencies of the United States Government prohibiting the pollution of stream or river waters by the dumping of any refuse, rubbish, or debris therein.

B. All sewage flow, including stormwater flow, interfering with construction and requiring diversion shall be diverted to sewers leading to water pollution control plants and shall not be directed to any waterway. The CONTRACTOR shall not cause or permit any action to occur which would cause an overflow to an existing waterway. Prior to commencing excavation and construction the CONTRACTOR shall submit for approval and obtain OWNER's approval thereof, of detailed plans showing how he intends to handle and dispose of sanitary, groundwater, and storm water flow. By approving the plan, the OWNER does not accept any responsibility for the adequacy thereof nor for any damages to public or private property resulting there from, such responsibilities remaining with the CONTRACTOR.

C. The CONTRACTOR shall be responsible for providing holding ponds or an approved method which will handle, carry through, or divert around his work all flows, including storm flows, so as to prevent excessive silting of waterways of flooding damage to the property.

D. The CONTRACTOR shall abide by all Federal, State, City, County permit conditions.

PART 4 DEWATERING

A. The CONTRACTOR shall construct, maintain, and operate all cofferdams, channels, flume drain, sumps, pumps, and/or other temporary diversion and protection works, shall furnish all materials required therefore and shall furnish, install, maintain, and operate all necessary pumping and other equipment for the environmentally safe removal and disposal of water from the various parts of the work and for maintaining the foundations and other parts of the work free from water.

B. The CONTRACTOR's method for removing water from excavations shall be subject to the approval of the ENGINEER. Where an excavation extends below the water table dewatering shall be accomplished in a manner that will prevent loss of fines from the foundation, will maintain stability of the excavated slopes and bottom of the excavation, and will result in all construction operations being performed in the dry. The use of a sufficient number of properly screened wells or other equivalent methods will be approved for dewatering. The CONTRACTOR will also be required to control seepage along the bottom of the excavation, which may require ditches and pipe drains leading to sumps from which the water shall be pumped. The CONTRACTOR shall obtain and pay for any and all permits that may be required for the removal and disposal of water from his dewatering operation.

PART 5 PROTECTION OF AIR QUALITY

A. The air pollution likely to occur due to construction operations shall be minimized by wetting down bare soils during windy periods, requiring the use of properly operating combustion emission control devices on construction vehicles and equipment used by CONTRACTORs, and by encouraging the shutdown of motorized equipment not actually in use.

B. Trash burning will not be permitted on the construction site.

PART 6 CONSTRUCTION NOISE CONTROL

6.1 GENERAL

A. The CONTRACTOR shall conduct all his work, use appropriate construction methods and equipment, and furnish and install acoustical barriers, all as necessary so that no noise emanating from the process or any related tool or equipment will exceed legal noise levels. Contractor must adhere to the City of Key West Sound Control Ordinance ARTICLE IV. - Sec. 26.

6.2 MITIGATION OF CONSTRUCTION NOISE IMPACT

A. The CONTRACTOR shall submit to the ENGINEER his plans to mitigate the construction noise impacts and to comply with the noise criteria specified herein, including the method of construction, the equipment to be used, and acoustical treatments if necessary.

B. The CONTRACTOR shall only use equipment in good condition with the approved noise and environmental controls (mufflers) or it will be rejected from the site.

END OF SECTION

SECTION 01025
MEASUREMENT AND PAYMENT

PART 1 GENERAL

1.1 GENERAL

A. The CONTRACTOR shall receive and accept the compensation as provided in the BID PROPOSAL and the Contract as full payment for performing all operations necessary to complete work orders under this Contract, and also in full payment for all loss or damages arising from the nature of the work, until the final acceptance by the OWNER.

B. The Unit prices stated in the Proposal include all costs and expenses for performing and completing the work as ordered and as described in the Contract Documents, details, technical specifications, and specified herein. Measurement and payment for an item at a Unit Price shown in the Proposal shall be in accordance with the description of the item in this section.

C. The quantities for payment under this Contract shall be determined by actual measurement of completed items, in-place, and ready for service and accepted by the OWNER, in accordance with the applicable method of payment therefore contained herein. The CONTRACTOR shall designate and provide a representative to be present at, to witness, and to assist in the making of field measurement of payment.

1.2 MEASUREMENT–GENERAL

A. Whenever pay quantities of material are determined by weight, the material shall be weighed on scales furnished by CONTRACTOR and certified accurate by the state agency responsible. A weight or load slip shall be obtained from the weigher and delivered to the OWNER'S representative at the point of delivery of the material.

B. Vehicles used to haul material being paid for by weight shall be weighed empty daily and at such additional times as required by ENGINEER. Each vehicle shall bear a plainly legible identification mark.

C. All materials which are specified for measurement by the cubic yard "measured in the vehicle" shall be hauled in vehicles of such type and size that the actual contents may be readily and accurately determined. Unless all vehicles are of uniform capacity, each vehicle must bear a plainly legible identification mark indicating its water level capacity. All vehicles shall be loaded to at least their water level capacity. Loads hauled in vehicles not meeting the above requirements or loads of a quantity less than the capacity of the vehicle, measured after being leveled off as above provided, will be subject to rejection, and no compensation will be allowed for such material.

D. Units of measure shown on the Proposal shall be as follows unless specified otherwise.

Item	**Method of Measurement**
CY	Cubic Yard: Field Measure by ENGINEER within the limits specified or shown
EA	Each: Field Count by ENGINEER
LF	Linear Foot: Field Measure by ENGINEER
LS	Lump Sum: Unit is one; no measurement will be made
SF	Square Foot: Measurement & calculation
SY	Square Yard: Measurement & calculation
TON	Ton: Haul tickets

1.3 PAYMENT

A. General: Progress payments on individual Work Orders will be made monthly based on the date of Work Order Notice to Proceed.

B. Payment for all Work shown or specified in the Contract Documents is included in the Contract Price. No measurement or payment will be made for individual items except as itemized herein as unit price items.

C. Payment will not be made for following:
   1. Loading, hauling, and disposing of rejected material.
   2. Quantities of material wasted or disposed of in manner not called for under Contract Documents.
   3. Rejected loads of material, including material rejected after it has been placed by reason of failure of CONTRACTOR to conform to provisions of Contract Documents.
   4. Material not unloaded from transporting vehicle.
   5. Defective Work not accepted by OWNER.
   6. Material remaining on hand after completion of Work.

D. Partial Payment: No partial payments will be made for materials and equipment delivered or stored.

E. Disregard references to method of payment in the referenced Standard Specifications.

1.4 DESCRIPTION OF PROPOSAL ITEMS

ITEM 1. **Payment & Performance Bonds**: shall be paid at the unit price per each Work Order issued.

ITEM 2. **Mobilization/Demobilization**: shall be paid at the unit price per each Work Order issued.

ITEM 3. **Personnel**: For the work performed, payment will be made for the documented actual time and cost of the following.

Labor for those hours that personnel are assigned **and participating** in the work. The unit prices stated in the Proposal shall include actual payroll cost, including wages, fringe benefits, labor insurance, labor taxes, and all other payroll expenses, and all other overhead and profit. No other compensation will be considered.

ITEM 4. **Equipment**: used in the work will be paid for at the unit prices stated in the Proposal. Payment will be made for only those hours during which the equipment **is in actual use**. The unit prices for equipment will in all cases be understood to cover all fuel, supplies, repairs, and renewals, and no further allowances will be made for those items. It shall also include all other overhead and profit. Mobilization to the site is included in the mobilization line item. No other compensation will be considered. The unit price for equipment is without operator. Separate payment will be made for operator at the unit price stated in the Proposal.

The following equipment descriptions are provided to give a standard for size, capacity, etc. Other similar equipment of comparable size and capacity will be acceptable. The ENGINEER's decision as to comparable equipment shall be final.

1. Crane: Minimum 18-ton Hydraulic Truck Type, Grove TM 180; or equal.
2. Backhoe: CAT 426 with rock bucket; or equal.
3. Backhoe: CAT 320; or equal.
4. Jet Truck (Cleaning): Meeting the requirements of Section CLEANING AND INTERNAL INSPECTION OF EXISTING SANITARY SEWERS.
5. Vibratory Roller: Shall be a self-propelled, single drum vibratory roller.
6. Wheel Front End Loader: CAT 950; or equal.
7. Dump Truck: Minimum capacity of 15 cubic yards.

Vans and pickup trucks used to store and transport tools, equipment, supplies and personnel and miscellaneous hand tools required to accomplish the work shall be considered incidental.

ITEM 5. **Materials**: delivered and used on the designated work but not included in the proposal and not incidental to the work shall be paid on the basis of the paid invoice plus sales tax, if paid for by the CONTRACTOR, plus a fixed fee of 15 %.

The hourly rates and added fixed fee for materials stated above shall be considered to be full compensation covering all costs, including overhead, profit, and any other general expense.

The CONTRACTOR's records shall make clear distinction between the cost of work paid for on an hourly rate basis and the cost of other work. The CONTRACTOR shall furnish the ENGINEER report sheets in duplicate on each day's hourly rate work no later than the working day following the performance of said work. The daily worksheets shall itemize the materials used, and shall also indicate the hours of personnel and equipment used for that day. The daily report sheets shall provide names or identifications and classifications of workers, the hourly rate as stated in the Proposal, and hours worked. These sheets shall also provide the size, type, identification, number of equipment, hourly rate indicated in the Proposal, and hours operated.

Material charges shall be substantiated by valid copies of vendor's invoices. Such invoices shall be submitted with the daily report sheets, or, if not available, they shall be submitted with subsequent daily report sheets. Said daily report sheets shall be signed by the CONTRACTOR or his authorized agent. Material will be paid for only when it is delivered to the site, and accepted by the ENGINEER.

The OWNER reserves the right to furnish such materials and equipment as he deems expedient and the CONTRACTOR shall have no claim for profit or added fees on the cost of such materials and equipment.

ITEM 6.-10. **Trench Excavation & Backfill:** Payment for work specified in this section will be made at the unit prices stated in the Proposal. Computation of quantities will be as indicated for item and will be based upon measurements made by the ENGINEER.

The work under this item for either storm sewer pipe or gravity sewer and pressure pipe will be paid for on a linear foot basis for the depth of the trench from the original ground surface to the flow line of the pipe. The payment per linear foot will be the amount stated in the Proposal. The depth figures indicated in the Proposal are inclusive to the nearest 0.1 foot; that is, a trench depth measured as 11.9 feet will be paid for at the unit price for excavation 10 to 12 feet deep. A trench depth measured as 12.0 feet will be paid for at the unit price for excavation 12 to 14 feet deep.

The length of trench will be measured horizontally from center-to-center of manholes, or inlets, or to the end of the pipe, whichever is applicable. The depth of the trench will be measured from the ground surface at the centerline of the trench to the invert of the pipe. The depth of the trench will be measured at interval of 25 feet along the centerline of the trench, and the depth of each measuring point will be the depth used for computing the depth of trench for a distance 25 feet ahead of the point of measurement. Payment for this item shall cover all materials, including lime rock backfill, and all work specified herein, or not specifically paid for in other

sections, except foundation stabilization, and sheeting left in place which will be paid for as other separate items. Pipe base and pipe zone backfill will be paid for under section GRAVITY SEWER AND PRESSURE PIPE.

The unit price bid per linear foot shall be for any type of material to be excavated and include compliance with OSHA trench safety system requirements. Any extra excavation required to provide space for pipe base specified under section GRAVITY SEWER AND PRESSURE PIPE.

Payment for trench excavation and backfill for service connection pipe is addressed under Section SEWER SERVICE CONNECTIONS

ITEM 11. **Pipe Base Stabilization:** Payment for this item will be based on the unit price per cubic yard stated in the Proposal. Measurement will be based upon individual trip tickets of actual truck measure furnished the ENGINEER for cubic yards used under this item. Trip tickets shall be presented to the ENGINEER for signature on the day the material is delivered. No payment will be allowed on trip tickets not so validated by the ENGINEER. Payment for this item shall constitute full compensation for all materials, labor, equipment, and incidentals necessary trench and for the extra depth of trench excavation required below the pipe base grade to provide for a stable base for the pipe. This item is to provide for unstable base encountered in the progress of the work and shall be used only under the direction of the ENGINEER.

ITEM 12. **Surface Restoration:** Disregard all references to method of payment in the referenced Standard Specifications.

Payment for the work under this section shall be based on the appropriate unit prices stated in the CONTRACTOR's Proposal. Payment shall be considered full compensation for furnishing all labor, materials, and equipment to complete the work as specified under this section.

Lime Rock Base & Flowable Fill:
Payment for lime rock base and Flowable fill will be based on the unit prices per cubic yard stated in the CONTRACTOR's Proposal measured horizontally along the length of the trench. The number of linear feet will be measured by the ENGINEER.

The unit prices shall include payment for excavation required to provide space for the surfacing, preparation of the trench, compaction, disposal of all excess excavated materials, testing, and all other work required to complete the installation of the lime rock base.

Asphalt Surface Repair: Payment for asphalt concrete pavement replacement and overlay will be based on the unit price per square yard stated in the CONTRACTOR's Proposal. Payment for this item shall constitute full compensation for all materials, labor, equipment, and incidentals necessary to complete the resurfacing, including prime and tack coats, adjusting elevations of castings, and all preparatory work.

ITEM 13. Pavement

a. Remove Existing Bituminous Surface: Payment for removing the existing bituminous surface will be made at the unit price per square yard of bituminous surface removed as stated in the CONTRACTOR's Proposal, and shall constitute full compensation for the work of removal and disposal of existing bituminous surfaces that is not paid for under trench excavation and backfill.

b-d. Utility Appurtenances Extensions: Payment for horizontal or vertical extensions of valve manholes, catch basins, inlets or other appurtenances will include full compensation for all work and materials required to raise, lower, or extend each appurtenance. Payment for utility appurtenance extensions will be based on the unit price for each extension stated in the CONTRACTOR's Proposal

e. Asphalt Concrete Overlay: Payment for the asphalt concrete pavement overlay will be made at the unit price per ton of concrete asphalt stated in the CONTRACTOR's Proposal, and shall constitute full compensation for milling pavement connections, furnishing and applying the tack coat, furnishing, laying, and compacting the leveling course and asphalt concrete. Measurement for payment will be based on the number of tons (2,000 pounds) of asphalt concrete incorporated in the pavement, as weighed on tested scales. Present trip ticket to the ENGINEER for signature as the material is delivered. Each trip ticket will show the date and time of delivery, truck number or driver's name, net weight of the material, and shall be considered as valid delivery receipts only when signed by the ENGINEER. Payment will be made only for the items of work shown in the Schedule of Unit Prices and Work Scope. All other labor, materials, equipment and incidentals necessary to complete the work shall be considered incidental to the unit prices shown in the Schedule of Unit Prices.

The quantity to be paid for shall be the number of tons actually furnished and incorporated in the work in accordance with the Specifications and as directed by the ENGINEER. This payment shall constitute full compensation for all materials and work as specified herein.

f. Rework Existing Base: Payment for reworking the lime rock base will be made at the unit price per square yard of base reworked as stated in the CONTRACTOR's Proposal and shall constitute full compensation for all earthwork required for this work.

g. Asphalt Concrete Leveling Course: Payment for the asphalt concrete pavement leveling course will be made at the unit price per ton of concrete asphalt stated in the CONTRACTOR's Proposal The quantity to be paid for shall be the number of tons actually furnished and incorporated in the work in accordance with the Specifications and as directed by the ENGINEER. This payment shall constitute full compensation for all materials and work as specified herein.

h.-i. Milling: Payment for milling ordered by the ENGINEER will be made at the unit price per square feet of asphalt concrete pavement milled as stated in the CONTRACTOR's Proposal, and shall constitute full compensation for all asphalt

concrete pavement milled beyond that considered to be incidental and required for connections to existing pavement. Milling in areas damaged due to the CONTRACTOR's failure to protect surface will not be paid for.

j.-m. Saw Cut Asphalt & Concrete: Payment shall be made at the unit price stated in the proposal.

ITEM 14. **Sidewalk Installation:** Payment for the work in this section will be included as part of the applicable square foot unit prices for 4" and 6" sidewalk as stated in the CONTRACTOR's Proposal. Payment shall be considered full compensation for furnishing all labor, materials, and equipment to complete the work. Payment for replacing sidewalk damaged by contractor will be incidental to the contract.

ITEM 15. **Curb Installation**: shall be paid by the linear foot of curb and thickened edge constructed at unit prices stated in the Contractor's BID. Payment shall be considered full compensation for furnishing all labor, materials, and equipment to complete the work. Payment for replacing curbs damaged by contractor will be incidental to the contract.

ITEM 16a&b **Formed Concrete, placed** shall be paid by the cubic yards placed at unit prices stated in the Contractor's BID. Payment shall be considered full compensation for furnishing all labor, materials, and equipment to complete the work.

ITEM 17a&b **Detectable Warning System**: shall be paid by the square foot installed constructed at unit prices stated in the Contractor's BID. Payment shall be considered full compensation for furnishing all labor, materials, and equipment to complete the work.

ITEM 18 **Pavement Marking & Striping:** shall be paid per each handicap space, stop bar, pavement message and directional marking stated in the CONTRACTOR's Proposal and shall constitute full compensation for furnishing and installing said marking. Striping shall be paid by the linear foot of striping as stated in the CONTRACTOR's Proposal and shall constitute full compensation for furnishing and installing striping.

ITEM 19. **Brick:** Payment shall be made at the unit price stated in the proposal.

ITEM 20-21. **Catch Basins & Inlets:** Payment for inlets will be made at the unit price per inlet stated in the CONTRACTOR's Proposal for inlets 6 feet deep, plus the unit price per foot stated in the CONTRACTOR's Proposal for extra depth of inlets over 6 feet, including extensions if required. No deduction will be made from the inlet price for depths less than 6 feet. Inlet depths will be measured from the top of the inlet grate at the curb to the inlet invert at the center of the inlet. The depth will be to the nearest foot as measured by the ENGINEER. This price shall constitute full compensation for all work required for the Construction of the inlets, complete, including the bottom, top, frame and grate, and for over excavating and placing the compacted 6-inch layer of base rock under the inlet bottom.

ITEM 22 -30. <u>ADS Polyethylene Pipe, Reinforced Concrete Pipe, RCP Class IV, PVC Sch 40, C-900 DR 18, DR 25, C 905 DR 25, DR 41:</u> Payment for gravity pipe will be based upon the unit price per linear foot as stated in the CONTRACTOR's Proposal for the various classes, types, and sizes of pipe installed as shown or as directed by the ENGINEER. Payment for pipe will be based on the actual number of feet installed, as measured by the ENGINEER. The pipe will be measured horizontally from center-to-center of manholes or to the end of the pipe, whichever is applicable.

The unit price per linear foot shall constitute full payment for the pipe, in place, backfill in the pipe zone, leakage testing, and all other work specified including sewer line lamping. Excavation and backfill above the pipe zone will be paid for under Section TRENCH EXCAVATION AND BACKFILL.

Where existing gravity sewers are replaced with new sewers, sewage handling will be paid for at the unit price indicated in the Proposal for sewage handling regardless of the pipe diameter. Such payment shall be full compensation for all material, labor, equipment and other costs, including bypass pumping, required to control the flow. No payment will be made for sewage handling where sewage handling is not required. Note that sewage handling required for the cleaning of existing lines is not included as a separate pay item but is considered incidental to that work.

Payment for ductile iron or PVC force main complete with the imported pipe base and pipe zone materials will be made at the unit price per linear foot for the respective pipe sizes stated in the Proposal. Measurement for payment will be the field-measured centerline length of the pipe in place. Excavation and backfill above the pipe zone will be paid for under Section TRENCH EXCAVATION AND BACKFILL.

Payment for ductile iron or PVC force main complete with the imported pipe base and pipe zone materials will be made at the unit price per linear foot for the respective pipe sizes stated in the Proposal. Measurement for payment will be the field-measured centerline length of the pipe in place. Excavation and backfill above the pipe zone will be paid for under Section TRENCH EXCAVATION AND BACKFILL.

Payment for furnishing and installing cast iron or ductile iron fittings will be made at the unit price per pound stated in the Proposal. Weight shall be based on ANSI A21.10 published weights, excluding weights for accessories and cement mortar lining. This payment shall constitute full compensation for all work required to furnish and install the fitting, including the cost to furnish and install the thrust block and all necessary material, tools, equipment, labor, excavation, dewatering, backfilling and cleanup.

Polyethylene Wrap: No separate payment for polyethylene wrap on all ductile iron pipe, both gravity and pressure pipe, will be made.

No payment for pipe, in place, will be made until the pipe has successfully passed the air or hydrostatic test.

The ENGINEER will withhold full payment on any section of pipe deemed unsatisfactory due to excessive leakage, unsatisfactory line and grade, or any other cause until such defects have been corrected in accordance with the intent of these Contract Documents.

If, within warranty period, any section of the sewer system, although originally accepted, is actually not acceptable due to subsequent excessive leakage, or any other defects, the CONTRACTOR shall repair or replace the affected portion at no cost to the OWNER. It is understood that if the CONTRACTOR fails to do such work as required, the Surety shall be liable for said costs of repair or replacement.

Removal of Existing lines: The unit price per linear foot shall constitute full payment for removing existing lines, regardless of depth or diameter. Payment for removal of existing lines under this item shall be considered full payment for all materials, labor, equipment, and incidentals necessary to perform the work. The measurement for payment will be the horizontal distance along the centerline of the pipe removed. Removal of manholes will be paid for separately.

ITEM 31. **Joints:** Payment for mechanically restrained joint for PVC pipe will be based upon the unit price each as stated in the CONTRACTOR's Proposal for the various sizes of joint installed as shown or as directed by the ENGINEER. Payment for joints will be based on the actual number installed, as measured by the ENGINEER.

ITEM 32. **Other:**

a. Removal of Existing Storm Drain: The unit price per linear foot shall constitute full payment for removing existing storm drain, regardless of depth or diameter. Payment for removal of existing storm drain under this item shall be considered full payment for all materials, labor, equipment, and incidentals necessary to perform the work. Removal of inlets and storm manholes will be paid for separately. The measurement for payment will be the horizontal distance along the centerline of the pipe removed.

b. Exfiltration Trench: Payment for additional cost for exfiltration trench will be made at the unit price stated in the Proposal. The unit price per linear foot shall constitute full compensation for perforation of the pipe, coarse rock, pipe bedding, pipe zone material, geotextile, and any other labor and materials required. Pipe is paid under the pipe line item.

c. Seepage Trench & d. French Drain: shall be paid at the unit price per linear feet of trench construction as stated in the CONTRACTOR's Proposal and shall constitute full compensation for all labor, materials and equipment required for this work.

ITEM 33. Manhole & Miscellaneous Concrete Construction:

a,b. Manholes: Payment for work necessary to construct manholes will be included in the Unit Price each stated in the Proposal for manholes in the respective depth increments. Payment shall include excavation and backfill and all labor and materials to complete the work including the required number of connections of the new sewer replacement pipe to the manhole.

Manhole depths will be measured from top of manhole frame and cover to the lowest sewer pipe invert elevation indicated for the manhole. Depth will be to the nearest foot. Payment well include compensation for a complete manhole including base, frame and cover, ring extensions, benches, channels, removal and disposal of existing manhole, connections to new sewer mains, and incoming pipes, temporary pavement and pavement replacement, and for over excavating and placing the compacted 6-inch layer of base rock under concrete base.

No differentiation for payment will be made for constructing manholes over existing sewers.

c. Drop Manhole Assemblies: Payment for drop manhole assemblies, regardless of size, will include payment for all work necessary to construct the drop assemblies as shown on the Detailed Drawings or as specified by the ENGINEER. Payment for drop manhole assemblies will be based on the unit price per vertical foot stated in the CONTRACTOR's Proposal, and shall include all labor and materials to complete the work, including the concrete encasement. Payment for connection of dissimilar sewer pipe, where required will be made separately at the unit price for Connections to Dissimilar Gravity Sewer Pipe. Drop assemblies will be measured from the invert of the pipe at the top of the assembly to the invert of the pipe into the manhole base at the bottom of the assembly.

d. Watertight Manhole Frame & Covers: Payment for the additional cost to provide watertight manhole frame and cover in lieu of standard manhole frame and cover will be made at the unit price stated in the Proposal.

e, f. Conflict Manholes: Payment for conflict manholes will include payment for all work necessary to construct the manholes, except as specifically indicated in this paragraph. Payment for conflict manholes will be based on the price stated in the CONTRACTOR's Proposal for conflict manholes 6 feet deep, plus the unit price per foot stated in the CONTRACTOR's Proposal for extra depth of conflict manholes over 6 feet, including extensions if required. No deduction will be made from the conflict manhole price for depths less than 6 feet. Manhole depths will be measured from the top of the manhole frame and cover to the manhole invert at the center of the manhole. The depth will be to the nearest foot, as measured by the ENGINEER. Payment shall include compensation for a complete manhole including the base, frame and cover, and ring extensions, the connections for connecting dissimilar gravity sewer pipe per the Detailed Drawings, and for over excavating and placing the compacted 6-inch layer of base rock under the concrete base. Payment for the ductile iron pipe will be made separately and will be based on the unit price in the

Proposal for the size installed for DIP Gravity Sewer Pipe. Payment will be for the actual length installed.

ITEM 34. **Service Connections Pipe Stub outs**: a. Payment for 6" pipe stub outs for sewer service connections, or to other schedules, will be based on the unit price for each size as stated in the Proposal. Payment will constitute full compensation for work related to furnishing and installing pipe and pipe plugs for future connections, complete, as specified.

b. Connection to Existing Manholes: Payment for connection to existing manholes will be based on the unit price for each connection as stated in the Proposal. Payment will constitute full compensation for work required to make each connection, complete, as specified.

c. Removal of Existing Manholes: Payment for the removal of existing manholes, regardless of depth, will be based on the unit price for each manhole removed as stated in the CONTRACTOR's Proposal. Payment shall constitute full compensation for all work required to remove each existing manhole, complete, as specified.

d. Adjusting Existing Manholes: Payment for adjusting existing manholes, regardless of the amount of adjustment, will be based on the unit price for each manhole adjusted as stated in the CONTRACTOR's Proposal. Payment shall constitute full compensation for all work required to adjust each manhole, complete, as specified.

ITEM 35. **Sewer Connection Services:** a. Payment for connection made at the trench wall will be made per each for disconnection of sewer and reconnection to existing sewer service line at the trench wall. Payment for this item shall constitute full compensation for all materials and work required to install the service connection pipe, complete including any additional trench excavation and backfill, pipe bedding, pipe zone material, sewer service pipe from the main line wye to the connection with existing service, the joint for connecting dissimilar pipes, and detection tape. No differentiation will be made for trench depth. Where water services are encountered in the same trench as sewer laterals, the removal and replacement of water services shall be included in the per each price.

Where the new service connection is to extend to the street right-of-way line, payment will be made as follows:

Payment for service connection pipe, in-place, will be based on the unit price per linear foot for the appropriate size of pipe stated in the CONTRACTOR's Proposal. Payment for this item shall constitute full compensation for all materials and work required to install the service connection pipe, complete, including trench excavation and backfill, pipe bedding, pipe zone material, the joint for connecting dissimilar pipes, and detection tape. No differentiation will be made for trench depth. Where water services are encountered in the same trench as sewer laterals, the removal and replacement of water services shall be included in the linear foot price. The length of the service connection will be based on the total

length of pipe installed, from the tip of the service wye, installed in the main line, to the connection to the existing service line, or end plug as appropriate, including clean-outs and all fittings, measure along the pipe centerline.

b. Cleanouts and c. Cleanout Boxes: Payment for the supply and installation of the service connection clean-outs and clean-out (meter) boxes will be made at the unit price stated in the CONTRACTOR's Proposal. No additional payment will be made where multiple boxes are required.

ITEM 36. **Cleaning & Internal Inspection of Existing Sewers:** Payment for cleaning will be based upon unit price per linear foot of sewer for the various sizes of sewer pipe cleaned. Measurement will be based upon the length of the manhole section between the centers of the manholes at each end of the section, as determined by the ENGINEER. Payment for cleaning manholes will be based upon the unit price each stated in the Proposal for cleaning manholes. Payment based upon the unit prices shall be full compensation for furnishing all labor, equipment, and materials specified and required for cleaning. Payment for root removal will be included in the unit prices bid for cleaning.

Payment for necessary flow control measures will be included in the unit price bid for cleaning of existing storm sewer.

ITEM 37. **PVC Wye Fittings or Connections:** Service connection wyes installed in the sanitary sewer lines will be paid for at the unit price stated in the CONTRACTOR's Proposal for the various sizes. Payment for service connection pipe plugs, stoppers, or caps will also be included under this item.

Since no deduction will be made under payment for pipe for the length of the wye, unit price for wye fittings should include only the additional cost of furnishing and installing the wye fitting, over the cost of furnishing and installing an equivalent straight run of pipe.

ITEM 38. **Connections to Dissimilar Gravity Pipe:** Payment for connections to dissimilar gravity pipe shall be made at the unit prices stated in the CONTRACTOR's Proposal. The unit prices shall constitute full payment for all materials and labor required to complete each connection, including the concrete enclosure collar required by the Detailed Drawings.

Removal of Existing Sanitary Sewer Lines: Payment shall be made at the unit price stated in the proposal.

Concrete Encasement with Steel: Payment for concrete encasement shall be made at the unit price cubic as stated in the CONTRACTOR's Proposal. The unit price shall constitute full payment for all materials and labor required to complete the concrete encasement. Measurement for payment will be based on the dimensions shown on the Detailed Drawings.

ITEM 39. **Installation of Plug Valves & Valve Boxes:** Payment will be made for each valve and valve box furnished and installed at the unit price stated in the Proposal. Payment for each valve and valve box shall constitute full compensation for all work specified under this section.

ITEM 40. **Environmental Protection:** Payment for the work in this section will be included as part of the applicable unit prices stated in the Proposal or as included.

ITEM 41. **Waterline Relocation:** Payment for the work in this section will be included as part of the linear foot unit prices stated in the Proposal or as included. Payment for each waterline installation shall constitute full compensation for all work specified under this section.

ITEM 42. **Testing:** Payment for the work in this section will be included as part of the applicable unit prices stated in the Proposal or as included.

ITEM 43. **Landscaping:** Unit prices and payment for tree transplanting and new tree planting will be full compensation for installation of tree, all materials, equipment and labor necessary to plant the trees, and all maintenance.

ITEM 44. **Roadway Sign**: The quantities to be paid for will be the number of roadside traffic signs of each designated class of assembly, complete. Price and payment will be full compensation for installation and of all materials and labor necessary to complete the signs.

ITEM 45. **Other:** a.Mark-up Allowed for materials, equipment, testing etc. not listed above will be paid at 15%.

b. Mark-up Allowed on approved subcontractors work will be paid at 5%.

END OF SECTION

SECTION 01500
TESTING SERVICES

PART 1 GENERAL

1.1 WORK INCLUDED

A. The CONTRACTOR shall employ and pay for the services of a qualified commercial independent testing laboratory acceptable to the ENGINEER and the OWNER to perform specified services.

B. Inspection, sampling, and testing included but may not be limited to:

1. Paving and surfacing.
2. Additional quality checks as required by the ENGINEER.
3. Slump testing for concrete as directed by ENGINEER.
4. Water Quality
5. Pipe Pressure

C. Employment of a testing laboratory shall in no way relieve the CONTRACTOR of his obligation to perform work in accordance with the Contract.

PART 2 PRODUCTS

2.1 SUBMITTALS

A. Submit six copies of reports of inspections and tests to ENGINEER promptly upon completion of inspections and tests, including:

1. Date issued.
2. Project title and Engineer's job number.
3. Testing laboratory name and address.
4. Name and signature of inspector.
5. Date of inspection or sampling.
6. Record of temperature and weather.
7. Date of test.
8. Location of inspection or test.
9. Identification of product and specification section.
10. Type of inspection or test.
11. Observation regarding compliance with the Contract Documents.

B. This report shall be signed and sealed by a Registered Professional Engineer Licensed in the State of Florida and qualified to perform such service.

PART 3 EXECUTION

3.1 LABORATORY DUTIES - LIMITATIONS OF AUTHORITY

A. Cooperate with the ENGINEER and CONTRACTOR; provide qualified personnel promptly on notice.

B. Perform specified inspections, sampling, and testing of materials and methods of construction:

1. Comply with specified standards, ASTM, other recognized standards, authorized and as specified.
2. Ascertain compliance with requirements of Contract Documents.

C. Notify the ENGINEER and CONTRACTOR immediately of irregularities or deficiencies of work which are observed during performance of services.

D. Perform additional services as required by the ENGINEER.

E. Payment for SURFACE RESTORATION will not be made until the six copies of the reports are received by the ENGINEER.

END OF SECTION

DIVISION 2

SITE WORK

SECTION 02221
TRENCH EXCAVATION AND BACKFILL

PART 1 GENERAL

1.1 WORK INCLUDED

A. This Section covers the work necessary for the trench excavation and backfill, complete.

B. Trenches in existing paved areas shall be backfilled to the level of the bottom of the base course. Installations of base course and payment shall be as specified in Section SURFACE RESTORATION.

C. Concrete encasement will be used where, in the opinion of the ENGINEER, there is insufficient cover over the pipe for proper cover and protection.

1.2 TRENCH EXCAVATION

A. Excavation is unclassified. Complete all excavation regardless of the type of materials encountered. The CONTRACTOR shall make own estimate of the kind of extent of the various materials, which will be encountered in the excavation.

B. Excavation of extremely large areas, i.e. for repair of HDPE pipe, shall be made and paid for as determined by the ENGINEER and agreed to in the Work Order.

1.3 RELATIVE COMPACTION

A. "Relative compaction" is defined as the ratio, in percent, of the as-compacted field dry density to the laboratory maximum dry density as determined by ASTM D1557. Corrections for oversize material may be applied to either the as-compacted field dry density or the maximum dry density, as determined by the ENGINEER.

1.4 OPTIMUM MOISTURE CONTENT

A. "Optimum moisture content" shall be determined by the ASTM Standard specified to determine the maximum dry density for relative compaction. Field moisture content shall be determined on the basis of the fraction passing the 3/4-inch sieve.

1.5 SUBMITTALS

A. Submittals shall be made for all products listed in accordance with the requirements specified in Section GENERAL REQUIREMENTS.

PART 2 PRODUCTS

2.1 FOUNDATION STABILIZATION

A. Foundation stabilization shall be 2-1/2-inch minus crushed rock, with reasonably well gradation from coarse to fine, and free from excessive dirt or other organic material with no more than 20 percent by weight passing the No. 200 sieve. The material shall be nonplastic.

2.2 TRENCH BACKFILL

A. Backfill above the pipe zone shall be lime rock backfill meeting the requirements of Section 911 of the DOT Specifications. Lime rock backfill may be excavated trench material if the CONTRACTOR screens or sieves the material and removes organics and foreign materials to this Specification and maintains moisture content as specified herein. Tests to prove the underline fill meets specifications will be paid for by the CONTRACTOR.

2.3 WATER FOR TRENCH BACKFILL

A. The CONTRACTOR shall make all arrangements for a source of water and bear all costs for the delivery of the water to the trench side.

2.4 COMPACTION EQUIPMENT

A. Compaction equipment shall be of suitable type and adequate to obtain the amount of compaction specified. Compaction equipment shall be operated in strict accordance with the manufacturer's instructions and recommendations and shall be maintained in such condition that it will deliver the manufacturer's rated compactive effort.

2.5 GRASSING

A. All grassed areas that have been damaged by trench excavation shall be sodded with Floratam St. Augustine sod as specified in section 02930 FINISH GRADING & GRASSING..

2.6 DETECTION TAPE

A. As specified in section 02732, SEWER SERVICE CONNECTIONS.

PART 3 EXECUTION

3.1 PREPARATION OF RIGHT-OF-WAY

A. The CONTRACTOR shall perform all clearing necessary for the proper installation of all utility lines, structures, and appurtenances in the locations shown on the Drawings. All utility poles or structures subject to damage resulting from excavation shall be protected during construction and restored to original condition upon completion of the work. The CONTRACTOR shall be responsible for all coordination and payment.

3.2 DISPOSAL OF CLEARED MATERIAL

A. The CONTRACTOR shall bear all costs of disposing of trees, stumps, brush, roots, limbs, and other waste materials from the clearing operation. Material shall be disposed of in such a manner as to meet all requirements of state, county, and local regulations regarding health, safety, and public welfare.

B. In no case shall any material be left on the project, shoved onto abutting private properties, or be buried in embankments or trenches on the project.

3.3 OBSTRUCTIONS

A. This item refers to obstructions which may be removed and do not require replacement. Remove obstructions within the trench area or adjacent thereto such as tree roots, stumps, abandoned piling, buildings and concrete structures, logs, and debris of all types without additional compensation. The ENGINEER may, if requested, make changes in the trench alignment to avoid major obstructions if such alignment changes can be made within the easement or right-of-way without adversely affecting the intended function of the facility. The CONTRACTOR shall pay all additional costs or credit the OWNER for any savings resulting from such alignment changes.

B. Dispose of obstructions removed from the excavation in accordance with Paragraph DISPOSAL OF CLEARED MATERIAL.

3.4 PAVEMENT, CURB, AND SIDEWALK REMOVAL

A. Saw cut all bituminous and concrete pavements, regardless of the thickness, and all curbs and sidewalks prior to excavation of the trenches with an approved pavement saw, hydro hammer, or approved pavement cutter. Width of the pavement cut shall be at least equal to the required width of the trench at ground surface. Pavement and concrete materials removed shall be hauled from the site and not used for trench backfill.

3.5 BRICK REMOVAL

B. Carefully remove all bricks encountered during excavation. The CONTRACTOR shall salvage all bricks and deliver them to the City depository at the direction of the ENGINEER. The CONTRACTOR shall make arrangements with the City a minimum of 48 hours in advance of delivery of the bricks. This work shall be considered incidental.

3.6 TRENCH WIDTH

A. Minimum width of unsheeted trenches in which pipe is to be laid shall be 18 inches greater than the inside diameter of the pipe for sizes up to 15-inch diameter and 24 inches greater than the outside diameter of pipe 15 inches and larger, or as approved. Sheeting requirements shall be independent of trench widths.

B. The maximum width at the top of the trench will not be limited except where excess width of excavation would cause damage to adjacent structures, lanes of traffic or property.

C. Confine trench widths to dedicated rights-of-way or construction easements, unless special written agreements have been made with the affected property OWNER.

3.7 GRADE

A. Excavate the trench to the lines and grades shown or as established by the ENGINEER with proper allowance for pipe thickness and for pipe base or special bedding when required. If the trench is excavated below the required grade, correct any part of the trench excavated below the grade at no additional cost to the OWNER, with lime rock of the type specified for pipe bedding. Place the lime rock over the full width of trench in compacted layers not exceeding 6 inches deep to the established grade with allowance for the pipe base or special bedding.

B. It shall be the CONTRACTOR's responsibility to make exploratory excavations as required to verify type location, size, and elevation of existing UTILITY that may interfere with installation of infrastructure prior to commencing work. CONTRACTOR shall perform this work well in advance of trenching and pipe laying for the repair. The CONTRACTOR shall call “Sunshine” the underground UTILITY location center at 1-800-432-4770 before digging.

3.8 SHORING, SHEETING, AND BRACING OF TRENCHES

A. Sheet and brace the trench when necessary to prevent caving during excavation in unstable materials, or to protect adjacent structures, property, workers, and the public. Increase trench widths accordingly by the thickness of the sheeting.

Maintain sheeting in place until the pipe has been placed and backfilled at the pipe zone. Shoring and sheeting shall be removed, as the backfilling is done, in a manner that will not damage the pipe or permit voids in the backfill. All sheeting, shoring, and bracing of trenches shall conform to the safety requirements of the federal, state, or local public agency having jurisdiction. The most stringent of these requirements shall apply.

3.9 LOCATION OF EXCAVATED MATERIALS

A. During trench excavation, place the excavated material only within the construction easement, right-of-way, or approved working area. Do not obstruct any private or public-traveled roadways or streets. Conform to all federal, state, and local codes governing the safe loading of all trenches with excavated material.

3.10 REMOVAL OF WATER

A. Due to the nature of the island, tidewater may be a significant detriment to placing fill. The CONTRACTOR may find it helpful to schedule the time of work based on tide elevations.

B. Provide and operate equipment adequate to keep all excavations and trenches free of water. Remove all water during periods when concrete is being deposited, when pipe is being laid, during the placing and compaction of backfill and at such other times as required for efficient and safe execution of the work. Avoid settlement or damage to adjacent property. When dewatering open excavations, dewater from outside the structural limits and from a point below the bottom of the excavation when possible. Design and operate dewatering systems to prevent removal of fines from existing ground.

C. Drainage of trench water through the pipeline under construction is prohibited.

D. The CONTRACTOR shall dispose of all water removed from the dewatering systems and excavations in a manner that is acceptable to the OWNER and to all regulatory agencies. The CONTRACTOR shall be responsible to obtain at his expense all permits required for dewatering and disposal of water.

E. Prior to beginning work the CONTRACTOR shall develop a dewatering method and submit it to the ENGINEER and the OWNER. The CONTRACTOR'S dewatering method shall take into account limitations in the existing operating conditions of the OWNER'S sewage collection and pumping facilities and storm drainage system. Final acceptance of the CONTRACTOR's dewatering method will be based on demonstrated performance of the system to satisfy the requirements of dewatering as specified herein.

F. If the CONTRACTOR proposes to discharge water into the sanitary sewer system, provisions must be made to prevent excess silt, sand or trench materials from entering the system.

G. The CONTRACTOR shall be responsible and bear the cost for any breakdowns and associated repair costs if they are directly attributed to his dewatering operation.

H. If the dewatering requirements are not satisfied due to inadequacy or failure of the dewatering system, then loosening of the foundation material, instability of the slopes or damage to the foundations or structures may occur, or other additional work or handling of materials may be required of the CONTRACTOR. The supply of all labor, materials, and equipment, and the performance of all work necessary to carry out additional work resulting from such inadequacy, premature shutdown, or failure of the dewatering system shall be undertaken by the CONTRACTOR to the satisfaction of the ENGINEER, and at no additional expense to the OWNER.

I. Dewatering shall be considered incidental to the construction and included in the applicable unit prices stated in the Proposal.

3.11 FOUNDATION STABILIZATION

A. When, in the opinion of the ENGINEER, the existing material in the bottom of the trench is unsuitable for supporting the pipe, excavate below the flow line of the pipe, as directed by the ENGINEER. Backfill the trench to subgrade of pipe base with foundation stabilization material specified herein before. Place the foundation stabilization material over the full width of the trench and compact in layers not exceeding 6 inches deep to the required grade.

3.12 PIPE BASE AND PIPE ZONE BACKFILL

A. Pipe base and pipe zone backfill are included in specification for pipe.

3.13 TRENCH BACKFILL ABOVE PIPE ZONE

A. In trenches under all structures, sidewalks, roads, parking areas, piping, and similar facilities, except where specifically shown, deposit lime rock backfill material conforming to Paragraph TRENCH BACKFILL in horizontal lifts not exceeding 12 inches in uncompact thickness. Compact to not less than 95 percent relative compaction. If compaction requirements are not met, the thickness of the uncompact horizontal lifts shall be reduced as directed by the ENGINEER. Repair any subsequent damage caused by settlement of trenches at the CONTRACTOR's sole expense. Under no circumstances allow sharp, heavy pieces of material to drop directly onto the pipe or the tamped material around the pipe. Do not use backfill material of consolidated masses larger than 6 inches in diameter.

B. Under no circumstances place crushed lime rock backfill material in water. Where backfill is placed in water, use crushed stone backfill at no additional cost to the OWNER.

C. Alternate backfill methods will be considered and negotiated on a work order by work order basis.

D. # 89 rock must be vibrated in 12" lifts to achieve consolidation to a point where rock does not settle significantly. #89 rock is the only approved standard for back fill in the pipe zone.

3.14 TRENCH BACKFILL BELOW THE PIPE BEDDING

When replacing existing pipe at a higher elevation, backfill below the new sewer pipe bedding shall be pipe bedding and pipe zone material as specified in GRAVITY & PRESSURE PIPE . Grade the bottom of the trench to achieve even distribution as required.

3.15 UTILITY LINE CROSSINGS

A. Crushed stone backfill # 89 shall be used under all culverts, water, gas, gravity sewer lines, force mains, buried telephone conduit, and any other miscellaneous buried pipelines that cross the excavated trench. Crushed stone backfill shall be carried a minimum of 2 feet beyond the edge of the buried utility. Crushed stone backfill beneath these facilities shall be considered incidental to the work and no additional payment will be made to the CONTRACTOR.

3.16 MAINTENANCE OF TRENCH BACKFILL

A. Maintain the backfilled trench surface between any two successive manholes or structures until the following operations have been completed and approved by the ENGINEER.

1. Service connections installed and backfilled.
2. Construction of manholes and appurtenances.
3. Valves, valve boxes, and hydrants installed.
4. Cleanup and restoration of all physical features.
5. UTILITY restored to their original condition or better.
6. And, in general, all work required between the two manholes accomplished including repaving.

B. This maintenance shall include, but not be limited to, the addition of crushed rock backfill material and cold patch to keep the surface of backfilled trenches reasonably smooth, free from ruts and potholes, and suitable for normal traffic flow.

C. No additional payment will be made for the maintenance of the trench backfill prior to completion of the work outlined above.

D. No pavement replacement shall be undertaken until all items outlined above have been completed and approved by the ENGINEER**.**

3.17 DISPOSAL OF EXCESS EXCAVATED MATERIAL

A. Dispose of all excess excavated materials that are not to be incorporated into the work immediately. Make arrangements for the disposal and bear all costs or retain any profit incidental to such disposal.

3.18 BLASTING

A. No blasting of any kind will be permitted.

3.19 SETTLEMENT

A. Any settlement noted adjacent to or in backfill, fill, or in structures built over the backfill or fill within the 2-year warranty period in accordance with the General Conditions will be considered to be caused by improper stabilization or compaction methods and shall be corrected at no cost to the OWNER. Structure damaged by settlement shall be restored to their original condition by the CONTRACTOR at no cost to the OWNER.

3.20 MOISTURE CONTROL

A. During all compacting operations, maintain optimum practicable moisture content required for compaction purposes in each lift of fill. Maintain moisture content uniform throughout the lift. At the time of compaction, the water content of the material shall be at optimum moisture content, plus or minus 2 percentage points.

B. Insofar as practicable, add water to the material at the site of excavation. Supplement, if required, by sprinkling the fill.

C. Do not attempt to compact fill material that contains excessive moisture. Aerate material by blading, disking, harrowing, or other methods, to hasten the drying process.

3.21 TESTING

A. Field Density and Moisture Tests: The Independent Testing Laboratory will determine in-place density and moisture content by any one or combination of the following methods:

1. ASTM D2922, D1556, D2216, or other methods selected by the ENGINEER. Cooperate with this testing work by leveling small test areas as designated. Backfill test areas at CONTRACTOR's sole expense. The frequency and location of testing shall be one test per lift between manholes or inlets or one test per lift for every 300 feet or portion thereof of pressure pipe. However, any lift of fill may be tested at any time, location, or elevation. See Section TESTING SERVICES.

3.22 TEMPORARY TRENCH PAVEMENT

A. In all paved areas the CONTRACTOR shall install 2-inch thick temporary pavement soon after the trench has been backfilled and it has been determined that the required

B. Temporary pavement shall be "cold patch" or other material acceptable to the compactions have been achieved. ENGINEER and agency having jurisdiction and shall conform to the FDOT specifications.

C. The temporary 1-1/2-inch asphalt patch shall remain for 30 days to allow for initial settlement. CONTRACTOR shall maintain temporary pavement continuously and provide additional pavement as necessary for a smooth surface. After the 30 days, the CONTRACTOR shall remove the temporary asphalt pavement, recompact the road base and place permanent pavement.

END OF SECTION

SECTION 02246
SILT SCREEN

PART 1 GENERAL

1.1 RELATED DOCUMENTS

A. Drawings and General Provisions of Contract, including General and Supplementary Construction and Division 1 Specification Sections apply to work of this section.

1.2 SCOPE

A. Geotextile Fabric for Silt Fence: This specification covers material and construction requirements for silt fence.

1.3 SUBMITTALS

A. Submit manufacturer's technical data and design and dimensions for installation of all silt fence items to ensure conformance with plans and specifications and Section 985 of FDOT Specification for Silt Fence.

PART 2 PRODUCTS

2.1 MATERIALS

A. Fabric: The Geotextile fabric shall be a woven fabric consisting of long chain polymeric filaments such as polypropylene, polyethylene, polyester, polyamides, or polyvinylidenechloride and shall be conformance with Section 985 of FDOT Specifications for Silt Fences.

B. Posts: Posts shall consist of 2-inch by 4-inch or 2 and one-half inch diameter minimum pressure treated (P.T.) wood; or steel 1.33ft. /lb. MINIMUM.

PART 3 EXECUTION

3.1 INSTALLATION

A. The silt fence (Geotextile fabric and posts shall be installed in strict accordance with plans, manufacturer's specifications, and Section 985 of FDOT Specifications for Silt Fence.

B. Silt fence shall be used and placed by the CONTRACTOR as needed and required by SFWMD and FDEP by the 2001 Standard Construction Practice to stop the silts from moving out of the work area.

END OF SECTION

SECTION 02575
SURFACE RESTORATION / INSTALLATION

PART 1 GENERAL

1.1 WORK INCLUDED

A. This section covers the work necessary to install or replace all pavements, pavers, curbs, sidewalks, rock surfacing, walls and other street features damaged either directly or indirectly by the operations incidental to the construction described in other Sections of these Specifications, or required for new installations.

B. See CONDITIONS OF THE CONTRACT and Division 1, GENERAL REQUIREMENTS, which contain information and requirements that apply to the work specified herein and are mandatory for this project.

C. Where the materials, construction procedures, degree of compaction of materials, and the method of control and testing, as required in these Specifications differ from the FDOT requirements, the more stringent requirements shall apply.

D. Two inches of asphalt paving over the trenches shall be placed as soon after the trench is backfilled and it can be determined that required compactions have been achieved.

E. Where directed by the ENGINEER, final overlay paving shall be provided and shall be full width of street and placed at end of construction as directed by the ENGINEER.

F. Cold patch asphalt required for temporary restoration or “make safe” measures is included in TRENCH EXCAVATION AND BACKFILL.

G. Submittals are required for all products identified in this section.

PART 2 PRODUCTS

2.1 GENERAL

A. All materials for replacement of existing base course and asphalt surfacing shall conform to the DOT Specifications except as modified herein.

B. The CONTRACTOR will be responsible for furnishing satisfactory materials that meet the Specifications and shall make such tests during the course of the work as are necessary to assure that the quality of the material used meets the Specifications.

2.2 RELATIVE COMPACTION

A. "Relative compaction" is defined as the ratio, in percent, of the as-compacted field dry density to the laboratory maximum dry density as determined by ASTM D1557. Corrections for oversize material may be applied to either the as-compacted field dry density or the maximum dry density, as determined by the ENGINEER.

2.3 OPTIMUM MOISTURE CONTENT

A. "Optimum moisture content" shall be determined by the ASTM standard specified to determine the maximum dry density for relative compaction. Field moisture content shall be determined on the basis of the fraction passing the 3/4-inch sieve.

2.4 LIME ROCK BASE COURSE

A. Aggregate quality and gradation shall confirm to Section 911 of the FDOT Standard Specifications for Road and Bridge Construction.

2.5 IMPORTED BASE COURSE ACCEPTANCE

A. Imported base course materials specified in this section are subject to the following requirement:

1. All tests necessary for the CONTRACTOR to locate an acceptable source of imported material shall be made by the CONTRACTOR. Certification that the material conforms to the Specification requirements along with copies of the test results from a qualified commercial testing laboratory shall be submitted to the ENGINEER for acceptance at least 10 days before the material is required for use. All material samples shall be furnished by the CONTRACTOR at the CONTRACTOR's sole expense. Samples shall be representative and be clearly marked to show the source of the material is required for use. All material samples shall be furnished by the CONTRACTOR at the CONTRACTOR's sole expense. Samples shall be representative and be clearly marked to show the source of the material and the intended use on the project. Sampling of the material source shall be done by the CONTRACTOR in accordance with ASTM D75. Notify the ENGINEER at least 24 hours proper to sampling. The ENGINEER may, at the ENGINEER's option, observe the sampling procedures. Tentative acceptance of the material source shall be based on an inspection of the source by the ENGINEER and/or the certified test results submitted by the CONTRACTOR to the ENGINEER, at the ENGINEER's discretion. No imported materials shall be delivered to the site until the proposed source and materials tests have been tentatively accepted in writing by the ENGINEER. Final acceptance will be based on tests made on samples of

material taken from the completed and compacted course. The completed course is defined as a course or layer that is ready for the next layer or the next phase of construction.

2. Gradation tests by the CONTRACTOR shall be made on samples taken at the place of production prior to shipment. Samples of the finished project for gradation testing shall be taken from each 1,500 tons of prepared materials or more often as determined by the ENGINEER, if variation in gradation is occurring, or if the material appears to depart from the Specifications. Test results shall be forwarded to the ENGINEER within 48 hours after sampling.

3. If tests conducted by the CONTRACTOR or the ENGINEER indicate that the material does not meet Specification requirements, material placement which does not meet Specification requirements, material placement will be terminated until corrective measures are taken. Material which does not conform to the Specification requirements and is placed in the work shall be removed and replaced at the CONTRACTOR's sole expense. Sampling and testing performed by the CONTRACTOR shall be done at the CONTRACTOR's sole expense.

2.6 BITUMINOUS PRIME AND TACK COAT

A. Prime Coat: Material shall be cutback asphalt, Grade RC-70 or RC-250 meeting DOT Specification 916-2, or other material acceptable to the ENGINEER and meeting DOT Specifications.

B. Tack Coat: Material shall be emulsified asphalt, Grade RS-2, SS-1, or SS-1H meeting requirements of DOT Specification 916-4.

2.7 CUTTING EXISTING PAVEMENT

A. Where new pavement abuts existing pavement, the old pavement shall be trimmed by saw cutting to a straight line. **Any pavement which has been damaged or which is broken and unsound or undermined shall be removed to provide a smooth, sound edge for joining new pavement.**

2.8 ASPHALT CONCRETE

A. The asphalt concrete shall be Type S-III in conformance with Section 331, DOT Specifications. Modification for Key West application may be used upon acceptance by the ENGINEER.

B. Asphalt concrete for leveling shall be Type S-III in conformance with Section 331, DOT Specifications.

C. Aggregate: Asphalt concrete shall meet the requirements of DOT Specifications.

D. Submit test results from a commercial testing laboratory to the ENGINEER to show that the materials meet the quality and graduation requirements.

E. Submit to ENGINEER mix designs for each type of asphalt from each plant.

2.9 CONCRETE

A. Concrete shall be Class I concrete in conformance with Section 345 of the FDOT Standard Specifications for Road and Bridge Construction.

B. Concrete Forms: All forms for curbs and sidewalks shall be 2-inch dimensioned lumber, plywood, or metal forms. Forms on the face of the curb shall have no horizontal form joints within 7 inches of the top of the curb.

C. Curing Compound: Conforming to Section 925 of FDOT Standard Specifications for Road and Bridge Construction.

D. Reinforcing Steel: Conform to ASTM A615, Grade 60.

2.10 FLOWABLE FILL

Provide flowable fill, when approved by the ENGINEER, with a minimum / maximum bearing strength of 500 psi as specified in Section 02726, MANHOLE AND MISCELLANEOUS CONCRETE CONSTRUCTION.

PART 3 EXECUTION

3.1 CONSTRUCTION PROCEDURE

A. The ENGINEER reserves the right to vary the type of resurfacing as best serves the interest of the OWNER. Trench backfill shall be as specified in Section TRENCH EXCAVATION AND BACKFILL.

B. Replace all bituminous and concrete pavement damaged or removed under this Contract with asphalt concrete regardless of original type.

C. In addition to the requirements set forth herein, the work shall conform to the applicable workmanship requirements of the state highway or municipal specifications.

3.2 REMOVAL OF PAVEMENT, SIDEWALK, CURBS, AND GUTTERS

A. Removal of all pavement, sidewalks, curbs, gutters shall conform to Section TRENCH EXCAVATION AND BACKFILL and payment for removal shall be included in that section.

3.3 STREET MAINTENANCE

A. Maintain all trenches as specified under Section TRENCH EXCAVATION AND BACKFILL.

3.4 SUBGRADE

A. Backfill and compaction of trenches shall be as specified in Section TRENCH EXCAVATION AND BACKFILL. Shape sub grade to required line, grade, and cross section. Remove all soft or otherwise unsuitable material disclosed by rolling the sub grade and replace with suitable material from the excavation. Fill holes and depressions, which develop under the roller, to the required grade and cross sections with material from the excavation. The finished sub grade shall be within a tolerance of plus or minus 0.08 of a foot of the grade and cross section, and shall be smooth and free from irregularities and at the density of 95 percent ASTM D1557.

3.5 CONSTRUCTION OF BASE COURSE

A. Obtain ENGINEER's acceptance of the sub grade prior to placing any base course material on the sub grade. Place BASE COURSE in maximum 6-inch loose lifts and compact to not less than 98 percent relative compaction.

3.6 BASE COURSE REPAIR

A. General:

1. The base course repair work shall consist of constructing a compacted lime rock base course, of the thickness and width in accordance with the details for the respective application, as shown on the Drawings.

2. All base course repair work shall conform to the grades and cross sections of the existing pavement. The finished grade of the lime rock base shall be level with the existing base course. The lime rock for base construction shall be Miami Limerock, in accordance with Section 911, DOT Specifications. The base course shall be constructed in accordance with all applicable provisions of Section 200, DOT Specifications.

3. If at any time the subgrade material becomes mixed with the base course materials, the CONTRACTOR shall, without additional compensation, dig

out and remove the mixture, reshape, and recompact the subgrade and replace the materials removed with the clean rock which shall be watered and rolled until satisfactorily compacted.

3.7 DEPTH OF LAYERS

A. The base course shall be constructed in lifts of not more than 6 inches in thickness prior to compaction.

3.8 SPREADING MATERIALS

A. The base course material may be spread by any method that will result in an even distribution of the material upon the roadway without perceptible separation in gradation.

B. Should there occur during any stage of the surfacing or stockpiling, a separation of the coarser from the finer materials causing serious lack of uniformity in the grading, the CONTRACTOR shall immediately make changes in the method of handling such as will prevent separation and meet acceptance of the ENGINEER.

C. Equipment such as scrapers and other equipment essentially used for earth excavation will not be permitted.

3.9 ROLLING

A. Compaction of each layer of base shall be performed in accordance with Section 200 of the FDOT Standard Specifications for Roadway and Bridge Construction.

B. Compaction equipment shall be adequate in design to provide compaction and obtain the specified density for each layer. Water shall be applied as needed to obtain the specified densities at the CONTRACTOR's sole expense.

C. In-place density and moisture content will be determined by any one or combination of the following methods: ASTM D2922, 1556, D2216, or other methods selected by the ENGINEER. Cooperate with this testing work by leveling small test areas designated. Backfill test areas at CONTRACTOR's sole expense. The frequency and location of testing shall be a minimum of one test per lift between manholes. However, any lift or fill may be tested at any time, location, or elevation.

D. Each layer of base course shall be placed and compacted to the specified density before a succeeding layer is placed.

E. The CONTRACTOR shall construct the base course in an orderly manner so that a reasonable length of trench will be ready for testing and a reasonable amount of time will be allowed for the ENGINEER to perform tests and obtain the test results during normal working hours.

F. Prior to testing any completed base course, the CONTRACTOR shall show reasonable proof that the completed section meets the requirements specified.

3.10 CORRECTION OF SURFACE DEFECTS

A. Should irregularities develop in any surface during or after rolling, they shall be remedied by loosening the surface and correcting the defects, after which the entire areas, including the surrounding surface, shall be rerolled until thoroughly compacted. The finished surface shall be true to the proper grade and crown before proceeding with the surfacing.

3.11 SURFACE TOLERANCES

A. The finished surface of the base course at any point shall be within plus or minus 0.04 foot of the grade required to provide the specified pavement thickness.

3.12 BITUMINOUS PRIME AND TACK COAT

A. The provisions of DOT Specifications shall be in effect for the construction of the prime coat.

B. The bituminous prime coat shall be applied to the limerock base immediately prior to the placement of asphalt concrete.

C. The rate of application of the bituminous prime coat shall comply with DOT Specifications.

D. The provisions of DOT Specifications shall be in effect for the construction of the tack coat.

E. The bituminous tack coat shall be applied to existing asphalt surfaces prior to the placement of new asphalt, between layers of asphalt concrete surface courses, surfaces of concrete footings that will come in contact with the asphalt concrete pavement, and vertical faces of all longitudinal and transverse joints that have become compacted or cooled.

F. The rate of application for the bituminous tack cost shall comply with DOT Specifications.

3.13 ASPHALT CONCRETE PAVEMENT REPLACEMENT

A. Preparation for Paving:

1. A prime coat shall be applied over the full length of the roadway, and asphalt concrete pavement shall not be placed until the prime coat has cured as per the manufacturer's recommendations.

2. Should any holes, breaks, or irregularities develop in the roadway surface after the prime coat has been applied, they shall be patched with asphalt concrete immediately in advance of placing the asphalt concrete.
3. After the maintenance, patching, or repair work has been completed and immediately prior to placing the asphalt concrete pavement, the surface of the prime coat shall be swept clean of all dirt, dust, or other foreign matter.

B. The proposed pavement construction schedule consists of immediately paving over storm drain, sewer line, and sewer service line trenches as soon as possible after it has been determined that sub base and base have achieved required compactions. The base course will be brought up to the elevations indicated on the Drawings and asphalt placed to bring grade up to match existing pavement elevations.

3.14 ASPHALT CONCRETE PAVEMENT

A. Workmanship in producing, hauling, placing, compacting, and finishing asphalt concrete shall conform to the applicable portions of the DOT Specifications.

3.15 CONNECTIONS WITH EXISTING FACILITIES

A. Where the bituminous pavement is to be connected with an existing roadway surface or other facility, the CONTRACTOR will be required to modify the existing roadway profile in such a manner as to produce a smooth riding connection to the existing facility. The CONTRACTOR shall meet existing neat lines where required.

B. Where it is necessary to remove existing asphalt surfaces or oil mat surfaces to provide proper meet lines and riding surfaces, the CONTRACTOR shall burn or chip the existing surface so that there will be sufficient depth to provide a minimum of 1 inch of asphalt concrete, and the waste material shall be disposed of to the satisfaction of the ENGINEER. Prior to placing the asphalt concrete, these areas shall be tacked. Meet lines shall be straight and the edges vertical. The edges of meet line cuts shall be painted with liquid asphalt or emulsified asphalt prior to placing asphalt concrete. After placing the asphalt concrete, the meet line shall be sealed by painting with a liquid asphalt or emulsified asphalt and immediately covered with clean, dry sand.

3.16 CONSTRUCTION OF COURSES

A. The asphalt concrete pavement shall be constructed in one or more courses as required in the DOT Specifications.

1. Rolling shall continue until all roller marks are eliminated and the minimum percent compaction stated in the DOT Specification has been obtained.

3.17 SURFACE TOLERANCE

A. Tests for conformity with the specified grade shall be made by the CONTRACTOR immediately after initial compression. Any variation shall be immediately corrected by the removal or addition of materials and by continuous rolling.

B. The completed surface of the pavement shall be of uniform texture, smooth, uniform as to grade, and free from defects of all kinds. The completed surface shall not vary more than 1/8 inch from the lower edge of a 10-foot straightedge placed on the surface along the centerline or across the trench.

C. After completion of the final rolling, the smoothness and grade of the surface shall again be tested by the CONTRACTOR.

D. When deviations in excess of the above tolerances are found, the pavement surface shall be corrected as stated in Section 330-12.4 of the FDOT Standard Specifications for Road and Bridge Construction.

E. All areas in which the surface of the completed pavement deviates more than twice the allowable tolerances described above shall be removed and replaced to the satisfaction of the ENGINEER.

F. All costs involved in making the corrections of defects described above shall be borne by the CONTRACTOR and no compensation will be made for this work.

3.18 SAMPLES

A. If directed by the ENGINEER, the CONTRACTOR shall without additional charge, provide the ENGINEER with test results of samples of asphalt concrete cut from the completed pavement or the individual courses thereof. Provide a minimum of three test cores located as directed by the ENGINEER. He shall also provide the ENGINEER with test results of samples of the uncompressed asphalt concrete mixtures, and all materials incorporated in the work.

3.19 WEATHER CONDITIONS

A. Asphalt shall not be applied to wet material. Asphalt shall not be applied during rainfall or any imminent storms that might adversely affect the construction. The ENGINEER will determine when surfaces and materials are dry enough to proceed with construction.

3.20 PROTECTION OF STRUCTURES

A. Provide whatever protective coverings may be necessary to protect the exposed portions of bridges, culverts, fences, walls, curbs, gutters, posts, guard fences, road signs, and any other structures from splashing concrete, oil and asphalt from the paving operations. Remove any concrete, oil, asphalt, dirt or any other undesirable matter that may come upon these structures by reason of the paving operations.

B. Where water valve boxes, manholes, catch basins, or other underground utility appurtenances are within the area to be surfaced, the resurfacing shall be level with the top of the existing finished elevation of these facilities. If they are not in accordance with the proposed finished surface elevations the CONTRACTOR shall notify the proper authority and either raise or lower the appurtenances or make arrangements with that authority and either raise or lower the appurtenances or make arrangement with that authority for having the facilities altered before proceeding with the resurfacing around the obstruction. The CONTRACTOR will be responsible for making certain that appurtenances are brought to proper grade to conform to finished surface elevations and any delays experienced from such obstructions will be considered as incidental to the paving operation. No additional payment will be made. Protect all covers during asphalt application.

3.21 EXCESS MATERIALS

A. Dispose of all excess materials. Make arrangements for the disposal and bear all costs or retain any profit incidental to such disposal.

3.22 CONTRACTOR'S RESPONSIBILITY

A. Settlement of replaced pavement over trenches within the warranty period shall be considered the result of improper or inadequate compaction of the subbase or base materials. The Contract shall promptly repair all pavement deficiencies noted during the warranty period at the CONTRACTOR's sole expense.

3.23 SIDEWALKS AND CURBS

A. Replace concrete sidewalks and curbs to the same section width, depth, line, grade as that removed or damaged or as directed by the ENGINEER. The minimum thickness of sidewalks shall be 4 inches. Cut ends of existing curb to a vertical plane. Prior to replacing the sections, properly backfill and compact the trench to prevent subsequent settlement.

B. Replace concrete sidewalks between scored joints and make replacement in a manner that will avoid a patched appearance. Provide a minimum 2-inch thick compacted leveling course of clean, crushed rock or gravel of quality herein before specified. Finish concrete surface similar to the adjacent sidewalks. Cut back sidewalk as required to ensure transition from existing to new sidewalk meets ADA code.

C. Concrete shall be a DOT mix w/3000 psi minimum rating.

END OF SECTION

SECTION 02721
CATCH BASINS AND INLETS

PART 1 GENERAL

1.1 WORK INCLUDED

A. This section covers the work necessary to furnish, install, certify and test the catch basins and inlets complete.

PART 2 PRODUCTS

2.1 CONCRETE

A. Concrete shall be ready-mixed, Class I concrete as specified in Section 345 of FDOT Standard Specifications for Road and Bridge Construction.

2.2 FORMS

A. Forms shall be conformance with Section 425 of FDOT Standard Specifications for Road and Bridge Construction.

2.4 UNITS

A. Inlet dimensions and details of construction shall conform to FDOT Roadway and Traffic Specifications and Design Standards.

2.5 PRECAST UNITS

A. At the opinion of the CONTRACTOR, approved precast units may be substituted for cast-in-place units. Precast units shall conform to ASTM C478. All precast units shall have epoxy-coated reinforcing bars. Submit details of proposed units to the ENGINEER for review. Concrete risers for extensions shall be a maximum of 6 inches high and of the same quality as the sections. Risers shall be reviewed by ENGINEER before installation.

2.6 MORTAR

A. Standard premixed mortar conforming to ASTM C387, Type S, or proportion 1 part Portland cement to 2 parts clean, well-graded sand which will pass a 1/8-inch screen. Admixtures may be used not exceeding the following percentages of weight of cement: Hydrated lime, 10 percent; diatomaceous earth or other inert materials, 5 percent. Consistency of mortar shall be such that it will readily adhere to the concrete.

2.7 FRAMES AND GRATINGS

A. Cast iron frames and gratings for catch basins and storm drain inlets shall be as indicated. Bearing surfaces shall be clean and shall provide uniform contact. Castings shall be tough, close-grained gray iron, sound, smooth, clean, free from blisters, blowholes, shrinkage, cold shuts, and all defects, and shall conform to ASTM A48, Class 30.

2.8 BASE ROCK

A. Base rock shall be crushed gravel or crushed rock, free from dirt, clay balls, and organic material, and conforming to size No. 57 graduation as specified in the Standard Specifications or similar accepted material and shall be imported, if necessary, at the CONTRACTOR's own expense. Limerock screenings or material resulting from trench excavation, except for limerock which has been crushed and graded to size as specified, will not be accepted for base rock.

PART 3 EXECUTION

3.1 EXCAVATION AND BACKFILL

A. Excavation as required to accomplish the construction. Backfill shall be as specified for the adjoining pipe trench.

3.2 CONSTRUCTION OF CATCH BASINS AND INLETS

A. Construct inlets and catch basins at the locations shown and in accordance with the Drawings. Construct forms to the dimensions and elevations required. Forms shall be tight and well braced. Chamfer corners of forms.

B. Prior to placing the concrete, remove all water and debris from the forms. Moisten forms just prior to placing the concrete. Handle concrete from the transporting vehicle to the forms in a continuous manner as rapidly as practical without segregation or loss of ingredients. Immediately after placing, compact concrete with a mechanical vibrator. Limit the duration of vibration to the time necessary to produce satisfactory consolidation without causing segregation.

C. Screed the top surface of exposed slabs and walls. When the initial water has been absorbed, float the surfaces with a wood float and lightly trowel with a steel trowel to a smooth finish free from marks or irregularities. Finish exposed edges with a steel edging tool. Remove forms and patch any defects in the concrete with mortar mixed in the same proportions as the original concrete mix.

D. Cure concrete by preventing the loss of moisture for a period of 7 days. Accomplish with a membrane-forming curing compound. Apply the curing compound immediately after removal of forms or finishing of the slabs. Protect concrete from damage during the 7-day curing period.

3.3 PLACING PRECAST UNITS

A. Remove water from the excavation. Place a minimum of 6 inches of rock base and thoroughly compact with a mechanical vibrating or power tamper.

3.4 EXTENSIONS

A. Install extensions to height determined by ENGINEER. Lay risers in mortar with sides plumb and tops to grade. Joints shall be sealed with mortar, with interior and exterior troweled smooth. Prevent mortar from drying out and cure by applying a curing compound. Extensions shall be watertight.

3.6 INSTALLATION OF FRAMES AND GRATES

A. Set frames and grates at elevations indicated or as determined in the field and in conformance with the Drawings.

B. Frames may be cast in, or shall be set in mortar.

3.7 CLEANING

A. Upon completion, clean each structure of all silt, debris, and foreign matter.

END OF SECTION

SECTION 02724
STORM DRAIN

PART 1 GENERAL

1.1 WORK INCLUDED

A. This section covers the work necessary for the storm drain and appurtenances complete.

PART 2 PRODUCTS

2.1 GENERAL

A. All storm drain pipe and perforated pipe for exfiltration trenches in the project shall be either polyethylene or concrete. Corrugated polyethylene pipe may be used with prior approval by the ENGINEER.

B. Submittals are required for all products identified in this section.

2.2 ADS POLYETHYLENE PIPE N-12 OR EQUAL

A. This Specification covers the requirement of high-density polyethylene corrugated pipe with smooth interior for storm sewer. Nominal sizes 12, 15, 18, and 24-inch are included.

B. Material: Pipe and fittings shall be manufactured from high density polyethylene resin which shall meet or exceed the requirements of Type III, Category 4 of 5, Grade P33 or P34, Class C per ASTM D1248.

C. Pipe Dimensions: the nominal size of the pipe is based on the nominal inside diameter of the pipe. The tolerance on the specified inside diameter shall be +3 percent, -1 percent, or 1/2 inch, whichever is less. Lengths shall be not less than 99 percent of the stated quantity.

D. Joints: The pipe shall be joined by split corrugated couplings at least seven corrugations wide and exceeding the soil tightness requirements of the AASHTO Standard Specification for Highway Bridges, Section 23 (2.23.3).

E. Pipe Stiffness: The pipe shall have a minimum pipe stiffness at 5 percent deflection as follows:

Diameter (inches)	Pipe Stiffness (PSI)
12	45
15	42
18	40
24	34

F. Tests shall be in accordance with ASTM D2412 with a minimum one diameter sample length, a loading rate of 0.5 inch/min., and readings at 5 percent deflection.

G. Hydraulics: The pipe shall have minimum tested Mannings "n" value of 0.012.

2.3 CONCRETE PIPE

A. Reinforced Concrete Pipe 12 Inches and Larger in Diameter: Conform to ASTM C76 with Wall B design, strength Class IV, and the following additional requirements:

1. Cement shall be Type II conforming to ASTM C150.
2. The minimum Portland cement content shall be 564 pounds per cubic yard.
3. The water/cement ratio shall not exceed 0.49.
4. Elliptical reinforcing is not permitted.
5. The area of the outer circular reinforcing cage shall not be less than 75 percent of the inner cage.
6. The CONTRACTOR shall provide the ENGINEER with a Certificate of Compliance from the pipe manufacturer that the pipe and concrete mix conforms in all respects to these specifications and other nonconflicting requirements of the referenced ASTM Specifications.

B. PVC pipe shall be in accordance with Section 15085, GRAVITY & PRESSURE PIPE

2.4 MORTAR

A. Mortar shall be standard premix mortar conforming to ASTM C387, Type N, or proportioned 1 part Portland cement to 2 parts of clean, well-graded sand which will pass a 1/8-inch screen by volume with water added only as necessary to produce a stiff workable mortar. Admixtures may be used not exceeding the following percentages by weight of cement: Hydrated lime, 10 percent; diatomaceous earth or other inert materials, 5 percent. Consistency of mortar shall be such that it will adhere readily to the pipe. Mortar mixed for longer than 30 minutes shall be used.

2.5 CONCRETE PIPE JOINTS

A. Joints shall be B&S rubber gasketed type and furnished by the pipe manufacturer. Joints to conform to the requirements of Section 941-1.5 of the DOT Specifications. Pipe manufacturer shall furnish lubricants for joints.

2.6 PIPE BEDDING AND PIPE ZONE MATERIAL

A. Pipe bedding and pipe zone material are identical and shall be crushed gravel or crushed rock, free from dirt, clay balls, and organic material and forming to size No. 89 gradation as specified in the Standard Specifications or similar accepted material and shall be imported at the CONTRACTOR's own expense. Lime rock screenings or material resulting from trench excavation, except for lime rock which has been

crushed and graded to size as specified, will not be accepted for pipe bedding materials.

B. Imported pipe bedding and pipe zone materials specified in this Section are subject to the following requirements:

1. All tests necessary for the CONTRACTOR to locate an acceptable source of imported material shall be made by the CONTRACTOR. Certification that the material conforms to the Specification requirement along with copies of the test results from a qualified commercial testing laboratory shall be submitted to the ENGINEER for acceptance at least 10 days before the material is required for use. All material samples shall be furnished by the CONTRACTOR at the CONTRACTOR's sole expense. Samples shall be representative and be clearly marked to show the source of the material and the intended use on the project. Sampling of the material source shall be done by the CONTRACTOR in accordance with ASTM D75. Notify the ENGINEER at least 24 hours prior to sampling. The ENGINEER may, at the ENGINEER's option, observe the sampling procedures. Tentative acceptance of the material source shall be based on an inspection of the source by the ENGINEER and/or the certified test results submitted by the CONTRACTOR to the ENGINEER, at the ENGINEER's discretion. No imported materials shall be delivered to the site until the proposed source and materials tests have been tentatively accepted in writing by the ENGINEER. Final acceptance will be based on tests made on samples of material taken from the completed and compacted course. The completed course is defined as a course or layer that is ready for the next layer or the next phase of construction.

2. Gradation tests by the CONTRACTOR shall be made on samples taken at the place of production prior to shipment. Samples of the finished project for gradation testing shall be taken from each 1,500 tons of prepared materials or more often as determined by the ENGINEER, if variation in gradation is occurring, or if the material appears to depart from the Specifications. Test results shall be forwarded to the ENGINEER within 48 hours after sampling.

3. If tests conducted by the CONTRACTOR or the ENGINEER indicate that the material does not meet Specification requirements, material placement will be terminated until corrective measures are taken. Material that does not conform to the Specification requirements and is placed in the work shall be removed and replaced at the CONTRACTOR's sole expense. Sampling and testing performed by the CONTRACTOR shall be done at the CONTRACTOR's sole expense.

2.7 GEOTEXTILE FOR EXFILTRATION TRENCH

A. Geotextile shall be a pervious sheet of polyester, polyethylene, nylon, or polypropylene filaments, woven or nonwoven, and formed into a uniform pattern. The geotextile shall have the following minimum properties when measured in accordance with the referenced standard:

1. Grab tensile strength, ASTM D1682: 130 pounds.
2. Trapezoidal tear, ASTM D2263: 70 pounds.
3. Mullen Burst, ASTM D751: 50 pounds.
4. Equivalent Opening Size: Smaller than 140 sieve.

B. The geotextile shall be finished so that the filaments will retain their relative position with respect to each other. The edges of woven fabric shall be finished to prevent the outer materials from pulling away from the fabric.

2.8 PERFORATED OR SLOTTED PIPE FOR EXFILTRATION TRENCHES

A. The perforated or slotted pipe shall have a minimum diameter of 12 inches. Only perforated pipe shall be used in this work and open joints will not be permitted. The perforation or slotted area shall be at least 3.3 square inches per square foot or 2.3 percent. The perforation or slot diameter shall be sized so as to prevent migration of material. With approval of the ENGINEER, a filter cloth wrap may be used with a perforated or slotted pipe.

2.9 COARSE ROCK

A. The perforated pipe shall be surrounded by a minimum cover of 12 inches of coarse rock as defined in paragraph 2.6 PIPE BEDDING AND PIPE ZONE MATERIAL.

PART 3 EXECUTION

3.1 TRENCH EXCAVATION AND BACKFILL

A. Conform to the requirements of Section TRENCH EXCAVATION AND BACKFILL. Excess excavated material shall be disposed of off the site.

3.2 PREPARATION OF TRENCH

A. Pipe Bedding Material

1. Grade: Grade the bottom of the trench by hand to the line and grade to which the pipe is to be laid, with proper allowance for pipe thickness and for pipe bedding. Before laying each section of pipe, check the grade and correct any irregularities found. The trench bottom shall form a continuous and uniform bearing and support for the pipe between bell holes.

2. Granular Material for Pipe Bedding: Provide granular material for pipe bedding under all pipe. Place material in the trench to a minimum depth of 6 inches and to a level 1/2 of the outside diameter above the bottom of the pipe barrel. Particular attention must be given to the area from the flow line to the centerline of the pipe to ensure that firm support is obtained to prevent any lateral movement of the pipe during the final backfilling of the pipe zone. Grade the top of the bedding to the bottom of the pipe ahead of pipe laying for the full width of the trench. Bedding shall provide firm support along entire pipe length.

3. Bell (Joint) Holes: At the location of each joint, dig bell joint holes of ample dimensions in the bedding and at the sides where necessary to permit the joint to be made properly and to permit easy visual inspection of the entire joint.

4. Dewatering: Conform to Paragraph REMOVAL OF WATER in Section TRENCH EXCAVATION AND BACKFILL.

3.3 PIPE DISTRIBUTION

A. Distribute material on the job no faster than it can be used to good advantage. In general, distribute no more than 1 day's supply of material in advance of the laying, unless otherwise accepted by the ENGINEER. Unload pipe that cannot be physically lifted by workers from the trucks, by a forklift, or other accepted means. Do not drop pipe of any size from the bed of the truck to the ground.

3.4 PIPE PREPARATION AND HANDLING

A. Inspect all pipe and fittings prior to lowering into trench to ensure no cracked, broken, or otherwise defective materials are being used. Clean ends of pipe thoroughly. Remove foreign matter and dirt from inside of pipe and keep clean during and after laying.

B. Use proper implements, tools, and facilities for the safe and proper protection of the work. Lower pipe into the trench in such a manner as to avoid any physical damage to the pipe. Remove all damaged pipe from the jobsite. Do not drop or dump pipe into trenches under any circumstances.

C. Stored pipe shall be covered to protect pipe from the sun.

3.5 PLACING GEOTEXTILE FOR EXFILTRATION TRENCHES

A. Prevent exposure of geotextile to light until needed for construction. Geotextile laying and subsequent covering with succeeding courses shall proceed in such a manner as to limit exposure to light to a maximum period of 24 hours.

B. The surface to receive the geotextile shall be smooth, free from obstructions, depressions, and sharp objects. Lay geotextile so as to minimize the number of joints and seams. Lay geotextile loosely, but without creases. Provide at least 1-foot overlap at joints.

C. Do not operate machinery directly on the geotextile. When packing material over joints, place in the direction from the overlying geotextile to the underlying geotextile. Prevent puncture, tear, or displacement of geotextile and protect from damage. Replace torn areas and holes by placing an overlay of geotextile having dimensions at least 2 feet greater than the tear or hole.

3.6 LINE AND GRADE

A. Do not deviate from line or grade, as established by the ENGINEER, more than 1/2 inch for line and 1/4 inch for grade, provided that such variation does not result in a level or reverse sloping invert. Measure for grade at the pipe invert -- not at the top of the pipe -- because of permissible variation in pipe wall thickness.

B. All storm drains shall be laid using a laser accepted by the ENGINEER. The beam shall be directed through the pipe. Batter boards or instrument laying will not be permitted. The laser shall be constantly shielded from the direct sun.

C. The CONTRACTOR shall set offset stakes or other accepted method of controlling alignment and grade for excavation of trenches and for pipe laying. The CONTRACTOR shall submit in writing his proposed method of establishing line and grade to the ENGINEER for acceptance.

3.7 LAYING AND JOINTING PIPE AND FITTINGS

A. Do not permit mud and foreign material to get into the pipe. During laying operations, do not permit debris, tools, clothing, or similar items to be placed in pipes.

B. Pipe laying shall proceed upgrade with spigot ends pointing in the direction of low. After a section of pipe has been lowered into the trench, clean the ends of the pipe. Be careful in handing pipe to prevent breakage. Remove any pipe damaged and replace at the CONTRACTOR's sole expense.

C. Pipe laying shall proceed upgrade with spigot ends pointing in direction of flow. After a section of pipe has been lowered into the prepared trench, clean and lubricate the end of the pipe to be joined, the inside of the joint, and the rubber ring immediately before joining the pipe. Make assembly of the joint in accordance with the recommendations of the manufacturer of the type of joint used. Provide all special tools and appliances required for the jointing assembly.

D. After the joint has been made, check pipe for alignment and grade. The trench bottom shall form a continuous and uniform bearing and support for the pipe at every point between joints. Apply sufficient pressure in making the joint to assure that the joint is "home," as defined in the standard installation instructions provided by the pipe manufacturer. To assure proper pipe alignment and joint makeup, place sufficient pipe zone material to secure the pipe from movement before the next joint is installed. Pipe 21 inches and smaller shall be laid so the inside joint space does not exceed 3/8 inch in width.

E. Take the necessary precautions required to prevent excavated or other foreign material from entering the pipe during the laying operation. At all times, when laying operations are not in progress, at the close of the day's work, or whenever the workmen are absent from the job, close and block the open end of the last laid section of pipe to prevent entry of foreign material or creep of the gasketed joints.

F. Take all precautions necessary to prevent the "uplift" or floating of the line prior to the completion of the backfilling operation.

3.8 BACKFILL AT THE PIPE ZONE

A. The pipe zone shall be considered to include the full width of the excavated trench from the bottom of the pipe to a point 12 inches above the outside surface of the barrel of the pipe.

B. Pipe zone material as herein before specified shall be used for the full depth of the pipe zone and for the full width of the excavated trench for all pipe.

C. Hand place the material around the pipe in horizontal 6-inch layers and thoroughly hand tamp with accepted tamping sticks supplemented by "walking in" and slicing with a shovel. Backfill the area of the pipe zone from the horizontal centerline to a point 12 inches above the top outside surface of the barrel of the pipe with pipe zone material. Use particular attention in placing material on the underside of the pipe to provide a solid backing and to prevent lateral movement during the final backfilling procedure. Vibrate and compact trench.

D. Conform to Paragraph TRENCH BACKFILL ABOVE THE PIPE ZONE in Section TRENCH EXCAVATION AND BACKFILL.

E. DETECTION TAPE shall be used above every underground pipe.

See Section 3.12 of Sewer Service Connections

3.9 REMOVAL OF EXISTING LINES

A. The CONTRACTOR shall furnish all labor, materials, and equipment required for the removal and disposal of existing sewer lines including inlets and manholes which are to be replaced by new construction utilizing the same trench. The existing lines to be removed are not considered worthy of salvage and therefore will be broken up and disposed of at the nearest legally operated landfill. Payment will be for the removal of existing lines. Any excavation and backfill which is required to remove the existing line which is at least 1 foot or more below the proposed grade will be paid for as a unit price item for excavation and backfill at the appropriate depth increment.

3.10 FINAL STORM DRAIN CLEANING

A. Prior to final acceptance and final structure-to-structure inspection by the ENGINEER of the storm drain system, completely flush or clean all parts of the system. Remove all accumulated construction debris; rocks, gravel, and other foreign material from the storm drain system at or near the closet downstream manhole. If necessary, use mechanical rodding equipment to remove accumulated mud, silt, and all other deposits from the storm sewer system at no additional cost to the OWNER.

B. Upon the ENGINEER's final structure-to-structure inspection of the storm drain system, if foreign matter and other construction debris are still prevalent in the system, reflush and clean the sections and portions of the lines as required.

3.11 FINAL TESTING

A. Gravity pressure testing shall be performed by the CONTRACTOR by plugging pipes and filling pipe and manholes. Visual reduction of more than 2” in 2 hours will indicate repairs are required.

END OF SECTION

SECTION 02726
MANHOLE AND MISCELLANEOUS CONCRETE CONSTRUCTION

PART 1 GENERAL

1.1 SECTION INCLUDES

A. Work necessary for construction of manholes, and sanitary manhole liner, plugging abandoned sewers, and miscellaneous concrete, complete. Manhole details are as shown on Drawings.

B. The CONTRACTOR shall verify all existing manholes and incoming and outgoing sewer diameters and invert elevations prior to ordering new manholes.

C. Manholes specified shall be for storm sewers and sanitary sewers.

D. Sanitary Sewer manholes must be lined.

1.2 SUBMITTALS

A. Unless designated an emergency the CONTRACTOR shall submit for review a detailed CAD drawing for each type of structure used on the project. These drawings shall detail the pre-cast structure, per the designs specified for the project, and shall show the concrete protective liner's placement on interior surfaces, across joints, at pipe connections, and at the adjustment area between manhole and casting.

B. The CONTRACTOR shall provide a detailed description of all liner field welding and weld testing procedures and will supply to the ENGINEER a copy of the liner manufacturer's certificate of training for those personnel performing the field weld. In addition, upon completion of the field welding and testing, a copy of the welding CONTRACTOR's inspection and testing log that lists, per structure, the dates of inspection and testing shall be provided to the ENGINEER. This log will be accompanied by a notarized certification from the welding CONTRACTOR that states that the welding, inspection, and testing were conducted per the liner manufacturer's specifications.

1.3 SHOP DRAWINGS

A. Precast Manholes: Details of construction.

B. Precast base Sections: Details of construction.

C. Manholes over existing sewers: Plans and schedule for diverting sewage flow.

1.4 QUALITY CONTROL SUBMITTALS

A. Precast manhole Sections: Manufacturer's results of tests performed on representative sections to be furnished.

B. Manufacturer’s certification of liner system.

PART 2 PRODUCTS

2.1 BASE ROCK

A. Base rock shall be crushed gravel or crushed rock, free from dirt, clay balls and organic material and conforming to size No. 89 gradation as specified in the Standard Specifications or similar accepted material and shall be imported if necessary at the CONTRACTOR's own expense. Limerock screenings or material resulting from trench excavation, except for limerock which has been crushed and graded to size as specified, will not be accepted for base rock.

2.2 CONCRETE

A. Ready-mixed, meeting ASTM C94, Alternate 2, and the following:

1. Manhole Base Minimum Compressive Strength: 3000 psi at 28 days.
2. Maximum Aggregate Size: 1-1/2 inches.
3. Slump: 2 to 4 inches.

B. FLOWABLE FILL

1. 28-day compressive field strength 500 psi.
2. Aggregate gradations must be submitted for review and approval. Maximum size # 4 stone.
3. Slump Range: Flowable
4. Concrete Content: 6.5 cwt / cubic yard.
5. Water Cement Ratio: 0.65 range 0.6 to 0.7.

2.3 MORTAR

A. Standard premixed meeting ASTM C387, or proportion 1 part Portland cement to 2 parts clean, well-graded sand, which will pass a 1/8-inch screen.

B. Admixtures: May be included but do not exceed the following percentages of weight of cement:

1. Hydrated Lime: 10 percent.
2. Diatomaceous Earth or Other Inert Material: 5 percent.

C. Consistency:

1. Tongue-and-Grove Type Joint: Such that mortar will readily adhere to pipe.

D. Mortar mixed for longer than 30 minutes shall be used.

2.4 FORMS

A. Exterior exposed surfaces shall be plywood. Others shall be matched boards, plywood, or other approved material. Form all vertical surfaces. Trench walls, large rock, or earth will not be approved form material. Forms shall be so designed and constructed that they may be removed without injury to the concrete. Forms shall be approved by the ENGINEER before being filled with concrete.

2.5 BRICK MANHOLES

A. Brick manholes may be used for conflict manholes provided all details of construction are approved by the ENGINEER.

2.6 BRICKWORK

A. Brick: ASTM C32, common, hard buried clay, regular and uniform in shape and size and of compact texture, Grade MA.

B. Cement: ASTM C150, Portland cement Type II.

C. Sand: ASTM C144, except that not less than 5 percent shall pass the No. 100 sieve, washed silica sand.

D. Lime: Lime putty shall be made from Type S hydrated lime and shall conform to ASTM C207. Lime shall be kept dry until used.

E. Mortar:

1. Conform to ASTM C270, Type S. Mortar shall consist of one part Portland cement, from 1/4 to 1/2 part lime putty, or hydrated lime, and clean well-graded sand in the proportion of three times the sum of the cementitious material.

2. Mortar shall be mixed in a batch mixer for not less than 5 minutes, and shall be mixed long enough for thorough intimate mixing of all ingredients. If color is added, it shall be added in a consistent manner to provide final uniformity.

2.7 EXTERIOR COATING

A. Exterior coating shall be coal-tar epoxy, Koppers 300-M, or equal. Minimum 16 mils dry film thickness, in two equal applications. First coat shall be red and second coat shall be black.

2.8 POURED-IN-PLACE MANHOLES

A. Poured-in-place type manholes may be used provided all details of construction are approved by the ENGINEER.

2.09 PRECAST MANHOLE SECTIONS

A. Precast manhole sections shall be minimum 48 inches in diameter, conforming to ASTM C478. Precast sections shall meet the permeability test requirements of ASTM C14. Minimum wall thickness shall be 4 inches. All manholes shall have epoxy-coated reinforcing bars. All manholes of less than 5 feet of depth shall have either flat top covers or concentric cones. Cones shall have same wall thickness and reinforcement as manhole section. Top and bottom of all sections shall be parallel. The CONTRACTOR's attention is directed to Paragraph MORTAR herein before.

2.10 PRECAST BASE SECTIONS AND BASES

A. At the option of the CONTRACTOR, precast base sections or manhole bases may be used provided all details of construction are approved by the ENGINEER. Base sections shall have the base slab integral with sidewalls. Base slab shall be 6 inches thick with No. 4 epoxy-coated reinforcing bars, 8-inch centers, both directions in center of slab. Tie reinforcing steel to wall steel.

2.11 MANHOLE ADAPTER

A. For precast manholes, provide Harco C 900 manhole adapter.

2.12 MANHOLE EXTENSIONS

A. Concrete grade rings for extensions shall be a maximum of 6 inches high and shall be approved by ENGINEER before installation. In general, manhole extensions will be used on all manholes in roads or streets or in other locations where a subsequent change in existing grade may be likely. Extensions will be limited to a maximum height of 12 inches. Finish grade for manhole covers shall conform to finished ground or street surface unless otherwise directed by the ENGINEER. The CONTRACTOR will be responsible for coordinating with the ENGINEER and OWNER to determine the finish grade for manhole covers and will make all adjustments necessary to bring manhole covers to that grade. Extensions shall be watertight.

2.13 PREFORMED PLASTIC GASKETS

A. Performed plastic gaskets for manhole joints shall be Kent-Seal No. 2 manufactured by Hamilton Kent Manufacturing Company, Kent, OH 44240; RAM-NEK, K.T. Snyder Company Inc., Houston, Texas; or equal, meeting all requirements of Federal Specification SS-S-00210.

2.14 PIPE STUBOUTS FOR SERVICE CONNECTIONS

A. Pipe stub outs shall be the same type as approved for use in lateral, main, or trunk sewer construction. Strength classifications shall be same class as in adjacent trenches. Where there are two different classes of pipe at a manhole, the higher strength pipe will govern strength classification. Rubber gasketed watertight plugs shall be furnished with each stub out adequately braced against all hydrostatic or air test pressures.

2.15 PIPE STUBOUTS FOR FUTURE SEWER CONNECTIONS

A. Pipe stub outs shall be the same type as approved for use in lateral, main, or trunk sewer construction. Strength classifications shall be same class as in adjacent trenches. Where there are two different classes of pipe at a manhole, higher strength pipe will govern strength classifications. Rubber gasketed watertight plugs shall be furnished with each stub out adequately braced against all hydrostatic or air test pressures.

2.16 MANHOLE FRAMES AND COVERS:

A. Cast iron of size and shape detailed on the Drawings. Covers shall have the word SANITARY SEWER or STORM SEWER, as appropriate, in 2-inch raised letters. Castings shall be tough, close-grained gray iron, sound, smooth, clean, free from blisters, blowholes, shrinkage, cold shuts, and all defects, and shall conform to ASTM A-48, Class 30B. Plane or grind bearing surfaces to ensure flat, true surfaces. Covers shall be true and seat within ring at all points.

2.17 WATERTIGHT FRAME FASTENERS

A. Provide stainless steel anchor bolts as shown on the Detailed Drawings.

2.18 POLYPROPYLENE:

A. Protective liner for precast concrete sanitary sewer structures.

Physical Properties:

The polypropylene (PP-R) liner shall be free of pores, pinholes, voids, and foreign bodies. All anchoring studs shall be manufactured during the extrusion process in one piece with the sheet. No welding to attach the studs to the sheet or mechanical finishing work is permitted. Additionally, all welding rod, profile strips, cap strips, and polyester backed pipe wrapping shall be manufactured from the same resins by the same manufacturer.

The characteristics values of the raw materials shall be as follows:

Property	**Test Method**	**Unit**	**Std. Value**
Density	ASTM D792-86	g/cm^3	0.898
Melt Flow Index	ASTM D1238-88	g/10 min	(190/5)

Property	Test Method	Unit	Std. Value
Heat Reversion	ASTM D1637-83	%	<2
Yield Stress	ASTM D638-89	N/mm^2	$\geq$ 2,900
Elongation of Yield	ASTM D638-89	%	$\geq$10
Elongation at Break	ASTM D638-89	%	$\geq$ 50
Fire Classification	UL94		V2
Electric Conductivity			10^{13}
Max. Working Temp.		F.	194 Degrees F
Resistance to Pullout	SKZ Test Directives	T/m_2	30
		T/ft^2	3

Design:

Studded liner sheets shall have a minimum design thickness of 2 mm (0.079 inch) and shall have a minimum of 39 anchoring studs per square foot of liner. Minimum stud height shall be no less than 9 mm (0.39 inch) with a minimum length of 14 mm (0.55 inch). Anchoring studs must be capable of resisting continuous hydraulic backpressure, to a minimum of 40 feet of hydraulic head, exerted between the interior wall of the concrete structure and the anchoring stud side of the protective liner. Nonstudded polypropylene cap strips used to bridge construction joints shall have a minimum design thickness of 3 mm (0.118 inch). Polyester backed nonstudded polypropylene sheets, used for the purpose of bonding the liner to dissimilar materials shall be attached to the polypropylene sheet during the extrusion process. The lining system shall be designed to be repairable at any time during the life of system. Polypropylene liner shall be designed and installed to protect the precast structure's interior floor, wall, cone, underside of top slab, and manhole casting adjustment area from chemical attack and microbial corrosion and to hydrostatically seal the entire interior to prevent groundwater infiltration. A seal between the ring and cover and the liner must be incorporated into the design.

Manufacturers: Sure-Grip; U.S. Precast, Miami, FL.

Fiberglass:

General Dimensions:

All preformed fiberglass liner units shall be proportioned for compatibility with the specified precast concrete units including base liners, riser liners, and cone liners. The terminal edges of the liners shall extend no less than 3/4 of an inch into the joint. The depth of the main through channel shall be equal or greater than the diameter of the main pipe run. The depth of each

lateral channel shall be equal to or greater than the diameter of the lateral pipe.

Physical Properties:

The fiberglass liner shall be constructed from fiberglass reinforced polyurethane, minimum thickness 3/16-inch, meeting the following composition requirements and incorporating the area and point bonding system.

Fiberglass:

Minimum length of fiber: 0.625 inches.
Glass content between 12 percent and 15 percent by weight.
Fiberglass weight between 400 and 425 linear yards per pound.
Fiberglass type to be E glass.

Chemical Resistance:

There shall be no surface degradation of the fiberglass liner when tested according to ASTM D1308 using the following reagents at 16-hour exposure:

Nitric Acid: 69 percent.
Hydrochloric Acid: 38 percent.
Acetic Acid: 60 percent.
Ammonia: 28 percent.
Sodium Hydroxide: 5.25 percent.
Sulfuric Acid: 50 percent.
Acetone.
Unleaded gasoline.
Turpentine.

There shall be no evidence of chemical attack on the material when tested according to ASTM D2152.

Thermal Shock: There shall be no evidence of surface defects after testing the fiberglass liner material in accordance with CSA-B45-M93 Clauses 5.2.2.1 to 5.2.2.4.

Friction Coefficient: The channels shall have a smooth, nonporous surface with a Manning Friction Coefficient no higher than 0.009.

Area and Point Bonding System:

Bonding Aggregate: Bonding aggregate shall be prewashed, kiln-dried, fractured 3/8-inch gravel having a well graded particle size distribution complying with the table below with minimum size = 3/16 inch and maximum size = 3/8 inch. Rate of application is 3.5 lb/square foot. Aggregate is to be applied uniformly with sufficient exposed surface area to ensure a complete and homogeneous bonding with the fiberglass polyurethane, as well as the concrete during the precast process.

Particle Size Distribution (ASTM E-11):

Sieve No.	% Passing
0.375	100
0.25	100
4	98-100
6	50-80
8	5-15
16	0-2

Bonding Wire: Bonding wire shall be grade 1006 10-gauge cold drawn wire having a tensile strength of 75,000 psi, formed into coils of 2-inch diameter. The steel shall comply with ASTM A510 and ASTM A853.

Connection to Socket Geometry: The geometry of each socket on a fiberglass liner shall meet ASTM F789 and ASTM D3034 for the PVC pipe to be connected. A seal between the ring and cover and the liner must be incorporated into the design.

Fiberglass liner shall be as manufactured by GU Florida, Inc., Sarasota, FL.

2.19 PRECAST OR LINED SANITARY SEWER MANHOLE BENCH AND INVERT SYSTEMS:

A. Precast bench and invert system used with polypropylene liner shall be cast with 4,000 psi concrete at 28 days with type II cement and 100 percent calcareous (limestone) aggregates. Precast bench and invert system shall be a factory built solid concrete system. Invert and flow channels shall be formed and constructed with a system that is engineered for this application. Precast bench and invert system shall be Tru-Contour Invert System as manufactured by A-LOK products, Inc., Tullytown, PA.

B. Lined bench and invert system used with fiberglass liner shall be solid fiberglass of the same thickness and properties of the liner system. Fiberglass lined system shall be as manufactured by GU FLORIDA, Sarasota, FL.

2.20 GASKETS and sealants

A. Preformed plastic gaskets for polypropylene lined manhole joints shall be RAM-NEK, Henry Co., Houston, Texas; or equal, meeting all requirements of Federal Specification SS-S-00210.

B. Preformed rubber gaskets for fiberglass lined manholes shall be Rub’R Nek Ltm; Henry Co., Houston, TX, or equal, meeting Federal Specification SS-S-210A.

Gaskets for joining pipes to the manhole fiberglass base liner shall be as approved by the pipe manufacturer, shall conform to the current ASTM C443 or ASTM 923 standard, and shall be installed according to the manufacturers' instructions. Resilient connectors for connections to 10-inch sewer pipes to polypropylene lined manhole with precast bench and invert system shall be rubber that is manufactured from synthetic compounds formulated for wastewater applications. The gasket shall comply with the physical requirements prescribed by ASTM C923 when tested in accordance with the referenced ASTM. Gaskets shall be A-LOK as manufactured by A-LOK Products, Inc., Tullytown, PA or approved equal.

Caulking:

Caulking to be applied to the inside of the fiberglass manhole riser shall meet the following:

No reaction with FRP.
Insoluble in water.
Has good long-term adhesion and cohesion.
Does not crack, shrink, or unstick.
Remains stable in a wastewater collection environment.
Resistant to H2S.
Does not stain.

Sealants (Water-Stop):

A sealing compound shall be applied to the outside area around each bell of the fiberglass base liner. The sealant shall be applied in one coat extending from the bell opening for a continuous 3-inch wide band around the entire bell. Apply the sealant between 15 minutes and 3 hours before pouring the concrete around the fiberglass base liner. The sealant may be Tapecoat Mastik Compound as supplied by the Tapecoat Company, or approved equivalent. The sealant is to be applied in accordance with the manufacturer's recommendations.

2.21 EXTERNAL JOINT WRAP

A. External joint wrap shall be EZ-WRAP plastic as manufactured by Press-Seal Gasket Corporation, Fort Wayne, IN, or equal.

2.22 NONSHRINK GROUT

A. Manufacturer:

1. UPCO Co., Cleveland, OH, Upcon High Flow.
2. Master Builder Co., Cleveland, OH, Master Flow 713.
3. L & M Construction Chemicals, Inc., Omaha, NE, Crystex.

2.23 MANHOLE EXTENSIONS

A. Concrete grade rings for extensions shall be a maximum of 6 inches high and shall be approved by ENGINEER before installation. In general, manhole

extensions will be used on all manholes in roads or streets or in other locations where a subsequent change in existing grade may be likely. Extensions will be limited to a maximum height of 12 inches. Finish grade for manhole covers shall conform to finished ground or street surface unless otherwise directed by the ENGINEER. The CONTRACTOR will be responsible for coordinating with the ENGINEER and OWNER to determine the finish grade for manhole covers and will make all adjustments necessary to bring manhole covers to that grade. Extensions shall be lined with polypropylene and be watertight.

2.24 MANHOLE CONNECTION SLEEVE

A. Manhole connection sleeve shall be a molded connector with an A-Lok gasket centered and integral to the sleeve. Gasket shall be the nominal size of the sewer pipe with sufficient tolerance to compress the gasket that will prevent leakage along the gasket to pipe interface. Manhole connection sleeve shall be as manufactured by A-Lok Products, Inc., Tullytown, PA.

B. Manhole connection sleeve is required for all sanitary sewer manholes and only manholes and inlets for the Grinnell Street storm sewers. All other storm sewer manholes shall conform to Section 425 of the FDOT Standard Specifications.

PART 3 EXECUTION

3.1 EXCAVATION AND BACKFILL

A. As specified in Section TRENCH EXCAVATION AND BACKFILL.

B. Backfill around manholes: Use highest class of trench backfill immediately adjacent, as shown on the Drawings.

3.2 BASE ROCK

A. Remove water from the excavation.

B. Place minimum of 6 inches of rock base in conformance to Section 901.2 of the FDOT Standard Specifications for Road and Bridge Construction and thoroughly compact with a mechanical vibrating or power tamper.

3.3 EXTERIOR COATING

A. Precast concrete manholes shall be coated outside with two coats of specified coating in accordance with the coating manufacturer's recommendations. The CONTRACTOR is to repair any damage to the coatings in accordance with the coating manufacturer's recommendations.

3.4 PRECAST CONCRETE BASE

A. Construct concrete base in conformance with the details shown on the applicable Work Order Drawings.

B. Vibrate to density concrete and screed so first precast manhole section to be placed has a level, uniform bearing for full circumference.

C. Deposit sufficient mortar on base to assure watertight seal between base and manhole wall, or place first precast section of manhole in concrete base before concrete has set. Properly locate and plumb first section.

D. If material in bottom of trench is unsuitable for supporting manhole, excavate below the base as directed by ENGINEER, and backfill to required grade with rock, as specified in Section TRENCH EXCAVATION AND BACKFILL, Article FOUNDATION STABILIZATION. Payment to be made as Paragraph FOUNDATION STABILIZATION in Section TRENCH EXCAVATION AND BACKFILL.

E. Precast Concrete Base Sections or manhole bases shall be provided and shall conform to all details of construction approved by the ENGINEER. Base sections shall have the base slab integral with sidewalls. Base slab shall be 8 inches thick with No. 4 reinforcing bars, 8-inch centers, both directions in center of slab. Tie reinforcing steel to wall steel.

F. Precast base shall be set and leveled at its proper location before closure of that run of pipe is made. Precast manhole shall not be moved or set into the new sewer pipe spigot end.

G. After base installation, grout the gap in the manhole between the stub out pipe invert and the precast channel with nonshrink grout.

3.5 PLACING PRECAST MANHOLE SECTIONS

A. Section Installation:

1. Thoroughly clean ends of sections to be joined.
2. Thoroughly wet joint with water prior to placing mortar.
3. Place mortar on groove of lower section.
4. Set next section in-place.
5. Fill joint completely with mortar of proper consistency.
6. Trowel interior and exterior surfaces smooth on standard tongue-and-groove joints.
7. Prevent mortar from drying out and cure by applying an approved curing compound or comparable approved method.
8. Do not use mortar mixed for longer than 30 minutes.
9. Chip out and replace cracked or defective mortar.
10. Completed Manholes: Rigid and watertight.

B. Preformed Plastic Gaskets: Install in accordance with manufacturer's instructions and the following:

1. Carefully inspect precast manhole sections to be joined.
2. Do not use sections with chips or cracks in the tongue.
3. Use only pipe primer furnished by gasket manufacturer.

4. Install gasket material in accordance with manufacturer instructions.
5. Fusion weld top and bottom 2-inch minimum wide strip over each section joint, where required.
6. Completed Manholes: Rigid and watertight.

3.6 PREFORMED PLASTIC GASKETS

A. Carefully inspect precast manhole section to be joined. Sections with chips or cracks in the tongue shall not be used. Preformed plastic gaskets shall be installed in strict conformance with the manufacturer's recommendations. Only pipe primer furnished by the gasket manufacturer will be approved.

3.7 GRADE ADJUSTMENTS

A. Construct brick masonry on top of manhole slabs or precast concrete manhole cones to provide grade adjustment in setting manhole frames.

3.8 BRICKWORK

A. All brick shall be saturated with water before being laid. Set true to line with courses plumb. Use no mortar that has begun to set.

B. Coursing: For gravity sewers lay bricks radially as headers with every sixth course laid as stretchers. The sides of each brick shall be buttered and shoved (not laid) in a full bed of mortar.

C. Joints: Horizontal joints shall not be greater than 1/2-inch thick. Fill longitudinal and transverse joints completely in each course before starting the next course. Joints shall be struck flush.

D. Parge Coat: The interior and exterior of the manhole shall be plastered with 1/2-inch thick coat of mortar to leave a dense smooth finish, completely watertight.

3.9 SETTING MANHOLE FRAMES

A. Set manhole frames and covers to conform accurately to the finished ground or pavement as shown or as directed by the ENGINEER. Set frames on manholes concentric with the masonry and in a full bed of mortar so that the space between the top of the manhole masonry and the bottom flanges of the frame will be completely filled and made watertight. Place a ring of mortar around the outside of the bottom flange at least 1-inch thick and pitched to shed water away from the frame. Extend mortar to the outer edge of the masonry and finish smooth and flush with the top of the flange.

3.10 PRECAST OR LINED MANHOLE BENCH AND INVERT SYSTEMS

A. Construct manhole inverts in conformance with details shown on the Drawings, and to the verified elevations as required. Construct manhole inverts with smooth transitions to ensure an unobstructed flow through manhole. Remove all sharp edges or rough sections which tend to obstruct flow. Where a full section of pipe is laid

through a manhole, break out the top section as indicated and cover exposed edge of pipe completely with mortar. Trowel all mortar surfaces smooth.

B. Precast and bench and invert systems shall be constructed in strict conformance with the respective manufacturer's procedures and recommendations.

3.11 DROP MANHOLE ASSEMBLIES

A. Construct drop manhole assemblies at locations required by the ENGINEER and in accordance with the Detailed Drawings. The tee, vertical pipe, and the lower elbow shall be encased in concrete as shown on the Detailed Drawings.

3.12 FLEXIBLE JOINTS

A. Provide joints in PVC pipe sewers not more than 1-1/2 feet from manhole walls. Lay pipes entering manholes on firmly compacted base rock to undisturbed earth. Base rock shall be as specified herein before.

B. Where the last joint of the line laid up to the manhole is more than 1-1/2 feet from the manhole base, a 6-inch concrete encasement shall be constructed around the entire pipe from the manhole base to within 1-1/2 feet of the pipe joint. The pipe encasement shall be constructed monolithically with the manhole base. Pipes laid out of the manhole shall be shortened to ensure that the first joint is no more than 1-1/2 feet from the manhole base.

3.13 PIPE STUBOUTS FOR SERVICE CONNECTIONS

A. Install 6-inch service connection stub outs in manholes only when directed by the ENGINEER. Place the service connection stub outs in the manhole base and construct invert channels as shown on the Drawings. Maximum length shall be 1-1/2 feet. Furnish all stub outs with a watertight gasketed pipe plug suitably braced against blow off. Provide compacted base rock as specified herein before to undisturbed earth under each stub out.

B. Unless otherwise directed by the ENGINEER, match the elevation of the inside top of service connection pipe to the elevation of the inside tope of the outlet pipe.

3.14 MANHOLE EXTENSIONS

A. Install extensions in conformance with the details shown on the Drawings, and to height determined by ENGINEER. Lay grade rings in mortar with sides plumb and tops level. Seal joints with mortar as specified for manhole sections. Extensions shall be watertight.

3.15 MANHOLE FRAMES AND COVERS

A. Install frames and covers on top of manholes to positively prevent all infiltration of surface or groundwater into manholes. Frames shall be set in a bed of mortar with the mortar carried over the flange of the ring as shown in the Manhole Details on the

Drawings. Set frames so tops of covers are flush with surface of adjoining pavement or ground surface, unless otherwise shown or directed.

3.16 WATERTIGHT MANHOLES

A. Prevent watertight manhole frames and covers from blowing off during sewer surcharging by installation of watertight manhole frame stainless steel anchor bolts as shown on Detailed Drawings.

3.17 CONNECTION TO EXISTING MANHOLES

A. Connect sewers to existing manholes at locations required by ENGINEER. Provide all diversion facilities and perform all work necessary to maintain sewage flow in existing sewers during connection to the manholes. Break out existing manhole bases or grouting as necessary and regrout to provide smooth flow into and through existing manholes.

3.18 CONFLICT MANHOLES

A. Construct conflict manholes in conformance with applicable parts of these Specifications and as shown on the Drawings.

3.19 REMOVAL OF EXISTING MANHOLES

A. When an existing manhole is removed or abandoned and the frame and cover are removed, they will remain as the property of the City, or condemned, in which case they will be removed by the CONTRACTOR from the project site.

3.20 REMOVAL AND ABANDONMENT OF EXISTING MANHOLES

A. When an existing manhole is removed, the CONTRACTOR shall remove and properly dispose of all sections, base slab, and old sewage pipe. The frame and cover shall remain as the property of the City and delivered to a site designated by the City.

B. Abandonment of existing manholes shall be accomplished by removing and disposing of the top section to a minimum of 4 feet below grade, plugging pipe connections with nonshrink grout, backfilling and compacting the remainder of the manhole and with FDOT No. 89 fill.

C. All material removed shall be satisfactorily disposed of by the CONTRACTOR at his expense.

3.21 ADJUSTING EXISTING MANHOLES

A. Install extensions to finished grade. Lay grade rings in mortar with sides plumb and tops level. Seal joints with mortar as specified for manhole sections. Extensions shall be watertight.

3.22 TESTING

A. Hydrostatic Testing:

1. When, in ENGINEER's opinion, the groundwater table is too low to permit visual detection of leaks, hydrostatically test all project manholes.
2. Procedure: Plug inlets and outlets and fill manhole with water to height determined by ENGINEER. Bypass pump sewage as required.
3. Where practical, a manhole may be filled 24 hours prior to time of testing, if desired, to permit normal absorption into the pipe walls to take place.
4. Leakage in each manhole shall not exceed 0.1 gallon per hour per foot of head above the invert.
5. Repair manholes that do not meet the leakage test, or do not meet specified requirements for visual inspection.

END OF SECTION

SECTION 02732
SEWER SERVICE CONNECTIONS

PART 1 GENERAL

1.1 WORK INCLUDED

A. This section covers the work necessary for installation of the service connections, complete.

B. Replacement of street surfacing, curbs, and sidewalks damaged by service connection construction is included in Section SURFACE RESTORATION.

C. Service connections may be made at the wall of the trench excavated for the main and connect directly to the existing service, or if the opinion of the ENGINEER, the existing service is seriously deteriorated, the ENGINEER may direct the service connection to be extended to the street or alley right-of-way line, in which case a clean-out shall be furnished and installed. Sewer service connection details are as shown on the Drawings.

PART 2 PRODUCTS

2.1 EXCAVATION AND BACKFILL

A. Conform to Section TRENCH EXCAVATION AND BACKFILL. Minimum allowable depth of trench at the property line or on private property within the permanent sewer easement shall be 4 feet. However, the ENGINEER shall determine the required depth at the end of the line in each case.

2.2 PIPE AND FITTINGS FOR SERVICE CONNECTIONS

A. General:

1. Manufactured with nominal inside diameter of 6 inches. Except by permission of the ENGINEER, long - radius bends shall be used at all changes in direction. Pipe and fittings for individual service connections shall be of one type of material throughout and no interchanging of pipe and fittings will be allowed. Pipe and fittings shall be one of those specified below.

2. Minimum service size shall be 6 inches. The ENGINEER will determine the size of the service in every case, unless specifically shown.

B. PVC Service Connection Sewer Pipe and Fittings: Conform to gravity sewer pipe as specified in Section GRAVITY SEWER AND PRESSURE PIPE.

C. Joints for Dissimilar Gravity Sewer Pipe: Conform to Section GRAVITY SEWER AND PRESSURE PIPE.

D. Detection Tape: Detection tape shall be 3 inches wide with a metallic backing. The tape shall be imprinted with the words CAUTION SEWERLINE BELOW. Tape shall be orange "Terra Tape/D" as manufactured by Griffolyn Company, Inc., Houston, Texas; "Line Guard" by Calpico, South San Francisco, California; or equal.

2.3 PIPE BEDDING AND PIPE ZONE MATERIAL

A. Pipe bedding and pipe zone material shall be as specified in Section GRAVITY SEWER AND PRESSURE PIPE.

2.4 SERVICE CONNECTION MARKERS

A. Mark all service line locations by cutting a " + " on the top of the curb directly over each service line or in the street side of the sidewalk where no curb is available. Where neither a curb nor sidewalk is available for marking, place a hardwood stake directly over the service pipe tied to two existing permanent features. Mark the full length of all service line with magnetic detection tape.

2.5 CLEANOUT

A. The clean-out (meter) boxes shall be made from 100% homogenous polyethylene material. Exterior wall shall be of smooth finish, black in color and have ultraviolet degradation protection properties for above ground storage. Interior wall shall be smooth finish and be white in color facilitating illumination of the interior area. Wall thickness shall be a minimum of 0.550 inches with wall core interior area of rigid foam construction offering insulation and tensile strength. Vertical crush to exceed 20,000 pounds and sidewall loading to exceed 180 pounds per square inch. A flange shall encircle the top area for installation in concrete. Clean-out boxes shall have a compartment size of 12 by 20 inches with a clear opening of 10 by 17 inches. Provide knockouts or notches in each end sized to allow placement of a 6-inch PVC pipe inside the box.

Boxes shall be manufactured by Mid-States Plastics, Mount Sterling, KY.
Florida Master Distributor: Okie Dokie Sales, Inc. (888-914-7772). Or equal.

B. Clean-out (meter) boxes shall be capable of being stacked vertically to provide adequate access to deeply buried sewer service lines.

C. Clean-out (meter) covers shall be cast of ductile iron conforming to ASTM A-536-84, grade 60-40-18. The meter box covers shall meet or exceed Federal specifications RR-F-621D for a minimum proof load of 25,000 pounds on 9” x 9” area. This testing shall be verified by an independent third party laboratory.

All meter box covers shall be cast and assembled in the USA. Where space permits, raised lettering on the casting shall identify the manufacturer, foundry, and country of origin. Submittal information with each shipment shall include certification from the foundry and third party laboratory that the above requirements have been met. All meter box covers shall offer a 10 year limited warranty and be as supplied by Okie Dokie Sales, Inc. or approved equal.

2.6 WATER FOR TRENCH BACKFILL

A. Conform to Section TRENCH EXCAVATION AND BACKFILL.

PART 3 EXECUTION

3.1 GENERAL

A. Conform to the applicable portions of Section TRENCH EXCAVATION AND BACKFILL and Section GRAVITY SEWER AND PRESSURE PIPE.

3.2 MAINTAIN EXISTING SERVICE

A. Bypass Pumping: Refer to Section GRAVITY SEWER AND PRESSURE PIPE.

B. The CONTRACTOR is responsible for maintaining sewage flows from the upstream lines leading to the pipe undergoing replacement by whatever means possible including, but not limited to, bypass pumping. At no time shall the CONTRACTOR be allowed to back up sewage flow to a potentially harmful level.

C. The CONTRACTOR shall make whatever provisions are necessary to maintain house or building sewer service including, but not limited to, bypass pumping. During the time of disconnection and reconnection of service connections, the property OWNERs or residents shall be notified prior to the work.

3.3 PIPE BEDDING MATERIAL

A. Provide a minimum 6-inch thick base of pipe bedding material under all service connection pipe. Hand-grade bedding to proper grade ahead of pipe laying. The bedding shall provide a firm, unyielding support along the entire pipe length.

3.4 BACKFILL AT THE PIPE ZONE

A. The pipe zone shall be considered to extend from the top of the pipe base to 12 inches above the top of the pipe and for the full width of the trench. Backfill the pipe zone with pipe one material, hand-placed simultaneously on both sides of the pipe for the full trench width and hand-tamped with approved tamping sticks supplemented by "walking in" and slicing with a shovel.

3.5 BACKFILL ABOVE THE PIPE ZONE

A. Conform to applicable portions of Section TRENCH EXCAVATION AND BACKFILL. Do not backfill around service connections until inspected and approved by the ENGINEER.

3.6 EXCESS EXCAVATED MATERIAL

A. Dispose of as specified in Section TRENCH EXCAVATION AND BACKFILL.

3.7 PREPARATION OF PIPE OF HANDLING

A. Conform to Section GRAVITY SEWER AND PRESSURE PIPE.

3.8 LAYING AND JOINTING OF PIPE AND FITTINGS

A. Workmanship shall conform to Section GRAVITY SEWER AND PRESSURE PIPE. Lay pipe upgrade from connection to the sanitary sewer with bell or coupling ends upgrade. Pipe shall be laid in a straight line at uniform grade between fittings, or on a uniform horizontal or vertical curvature achieved by deflecting the pipe joints within manufacturer's recommended limits.

B. Maximum deflection permissible with any one fitting shall not exceed 45 degrees and shall be accomplished with long-radius curves or bends. Short-radius elbows or curves will not be permitted, except by permission of the ENGINEER.

C. Make service connections to the sewer system at manholes only when directed by the ENGINEER. Where service connection to manholes or concrete structures, make the connection so the standard pipe joint is located not more than 1.5 feet from the structure.

D. Provide ends of all service connection lines and fittings with standard watertight plugs, caps, and stopper, suitably braced to prevent blow-off during internal hydrostatic on air testing.

E. The first length of pipe, out from the tee on the lateral or main, shall not be greater than 3 feet in length.

F. If foundation stabilization material is required it shall be furnished, placed, and paid for as specified in Section TRENCH EXCAVATION AND BACKFILL.

3.9 LINE AND GRADE

A. The ENGINEER will establish line and grade to the tract of land to the serviced by the sewer system. CONTRACTOR shall perform all stakeout. At the pre-selected

location of the service connections, a stake will be driven into the ground showing the depth of excavation required at the upstream end of the service connection.

B. Install the sewer tee so as to locate the connection pipe within a horizontal distance of 1 foot either side of the pre-selected location.

C. Batter boards will be required, but lay the pipe uniformly between the tee or the top of the riser section and the stake. Where minimum slopes are used, lay the pipe by means of a good-quality builder's level, not less than 24 inches in length. Minimum slope shall be 1/4 inch per foot unless otherwise permitted by the ENGINEER, but in no case less than 1/8 inch per foot.

3.10 WATER SERVICES

A. It is possible that water services will be located in the same trenches as existing sewer laterals. The CONTRACTOR shall notify the Florida Keys Aqueduct Authority when encountering water services.

B. The CONTRACTOR shall either disconnect water services and reconnect after installing the sewer laterals or remove and replace the water services with new materials when water services are encountered. All materials and workmanship shall be in conformance with Florida Keys Aqueduct Authority standards. Work must be inspected by Authority personnel prior to backfilling and compaction. Removal and replacement of waterline services and fittings is incidental to sewer service connections. No claim will be allowed for delays or additional compensation due to the existence of water services in the same trench as sewer laterals.

3.11 SERVICE CONNECTION MARKERS

A. After the service connection pipe is installed, block the capped or plugged end and install marker. Paint the top portion of the marker immediately after its installation with first-quality white, quick drying enamel.

B. Take precautions during the backfilling operation to insure the position and location of the marker. If the marker is broken or knocked out of vertical alignment during the backfilling operation, reopen the trench and place the marker in accordance with the Sewer Service Connection Details shown on the Drawings.

3.12 DETECTION TAPE

A. Magnetic / Metallic detection tape shall be installed over all service connection pipe. It shall be placed in accordance with the manufacturer’s directions, directly over the pipe at a depth of 12 inches below final grade.

3.13 SERVICE CONNECTION CLEANOUTS

A. All pipe and fittings for clean-outs shall conform to applicable requirements herein, and gravel backfill around the clean-outs shall conform to imported pipe base and pipe zone material, herein.

B. Construct in accordance with the Service Connection Clean-out as shown on the Sewer Service Details on the Drawings.

3.14 DISCONNECTING AND RECONNECTING EXISTING SERVICE CONNECTIONS

A. On all existing services, disconnect existing service connection from existing sewers to be abandoned and reconnect them to the new sewers. It shall be the CONTRACTOR's responsibility to locate the existing service connections prior to installing the tee in the new sewer line.

END OF SECTION

SECTION 02731
ROADWAY SIGNS

PART 1 GENERAL

1.1 WORK INCLUDED

A. This section covers the work necessary for establishing a standard of signs, including furnishing and placing of signs and posts.

B. See CONDITIONS OF THE CONTRACT and Division 1, GENERAL REQUIREMENTS, which contain information and requirements that apply to the work specified herein and are mandatory for this project.

C. Areas disturbed by the CONTRACTOR whether inside or outside the limits of the construction area shall be restored in accordance with this section. Areas outside the limits of construction shall be restored at the CONTRACTOR'S sole expense.

1.2 SUBMITTALS

A. Shop Drawings: Product labels/data sheets.

PART 2 PRODUCTS

2.1 SIGNS

A. Signs shall be 080 5052-H38 Aluminum w/ #1200 Alodine finish. Finish shall also be high intensity.

B. Color and dimensions shall be standard MUTCD compliant.

2.2 POSTS

A. Frangible supports: Provide posts for all frangible sign assemblies consisting of aluminum tubes up to 3-1/2 inches outside diameter with 3/16 in. wall thickness, or galvanized steel U-channel up to 3 lbs/ft. in accordance with FDOT Roadway and Traffic Design standards, Index Nos. 11860 through 11865 for frangible sign supports.

B. Provide all single column signs mounted on a tubular post, not requiring a foundation, with a standard extruded aluminum sign bracket clamped on the post 12 inches below grade. Match bracket size with the post diameter.

C. Steel posts: When using steel posts as the structural member in a full length support or breakaway base installation for a small roadway sign, provide steel flanged U-channel consisting of rolled rail steel or an equivalent billet steel, meeting the mechanical requirements of ASTM A 499, Grade 60, and meeting the chemical

requirements of ASTM A 1. For each U-channel, punch or drill 3/8" diameter holes on 1 inch centers through the center of the post, starting approximately 1 inch from the top and extending the full length of the U-post. Ensure that the weight per foot of a particular manufacturer's U-channel size does not vary more than ±3-1/2% of its specified weight per foot. Taper the bottom end of the U-channel post for easier installation. Machine straighten the U-channel to a tolerance of 0.4% of the length. Ensure that post configuration generally complies with the dimensions for Type F or Type M flanged U-channel, as shown on FDOT Roadway and Traffic Design Standards, Index No. 11865. Only provide steel components that have been galvanized after fabrication in accordance with ASTM A 123 [ASTM A 123M] and have a smooth uniform finish free from defects affecting strength, durability, and appearance. Attach the sign to the structural member using hardware meeting the manufacturer's recommendations and as specified in the FDOT Roadway and Traffic Design Standards. Only use attachment hardware (nuts, bolts, clamps, brackets, braces, etc.) of a non-corrosive metal, aluminum, or galvanized steel, meeting the requirements specified in the FDOT Roadway and Traffic Design Standards, Index Nos. 11860 through 11865.

PART 3 MATERIALS

3.1 CONCRETE

A. For footings, use Class II concrete meeting the requirements of FDOT Section 346.

3.2 ALUMINUM MATERIALS

A. For aluminum materials, meet the general provisions of FDOT 965-1.

B. Channels: For aluminum channels, meet the requirements of ASTM B 308 [ASTM B 308M].

C. Bolts, Nuts, and Lock washers: Ensure that finished bolts and washers are given an anodic coating of at least 0.0002 inch in thickness and are chromate-sealed.

3.3 STEEL

A. Only use structural steel, including bolts, nuts, and washers that have been hot dip galvanized or metalized after fabrication. Perform hot dip galvanizing in accordance with ASTM A 123 [ASTM A 123M] or ASTM A 153 [ASTM 153M] and metalizing in accordance with FDOT Section 562. For galvanized steel members, meet the general requirements of FDOT Section 962 and the specific requirements of 962-7.

B. Specific Uses of Aluminum and Galvanized Steel: Use aluminum bolts nuts, and hardware to connect parts of the cast base. Use galvanized steel anchor bolts for anchoring base plates to concrete bases and for the nuts and washers therefore.

For all other metal parts, the ENGINEER will allow galvanized steel as an alternate to aluminum.

PART 4 EXECUTION

4.1 ACCEPTANCE OF SIGNS

A. Manufacturer's Certification and Recommendations: Ensure that the sign manufacturer provides producer's certifications of materials incorporated into the signs. Ensure that the sign manufacturer certifies that the delivered signs conform to this Section and provides recommendations for storing and repairing signs.

B. Packaging and Shipping: Have the manufacturer package and ship the signs in a manner which will minimize possible damage.

C. Storage of Signs: If signs are stored prior to installation, store them in accordance with the manufacturer's recommendations.

D. Sign Inspection: Do not install signs until the ENGINEER inspects them for conformance with this Section. Provide all manufacturer certifications and recommendations prior to the ENGINEER's inspection. The ENGINEER will inspect the signs upon delivery to the storage or project site and again at the final construction inspection. Repair and replace signs deemed unacceptable by the ENGINEER at no expense to the City.

E. Imperfections and Repairs: Repair and replace signs containing imperfections or damage regardless of the kind, type, or cause of the imperfections or damage. Make repairs according to the manufacturer's recommendations and to the satisfaction of the ENGINEER. Ensure that completed repairs provide a level of quality necessary to maintain the service life warranty of the sign and are satisfactory in appearance to the ENGINEER.

4.2 FOOTINGS FOR SIGNS, POSTS, AND SUPPORTS

A. Excavation and Backfilling: Perform excavation and backfilling for the footings in accordance with Section 125, with the exceptions that no specific density is required and that the backfill may be tamped in 4 inches maximum layers. Use material that is at near optimum moisture and neither dry or saturated, and tamp to the extent directed by the ENGINEER. The City may require that the backfilling be done with poured concrete.

B. Removal of Footings: When existing ground mounted signs are to be modified or removed, immediately remove supports and footings that project more than 6 inches above the ground surface after removing sign panel from the assembly. Remove existing footings to a depth of at least 12 inches below the ground surface. The cost will be included in the Contract unit price of the item to which it is incidental.

END OF SECTION

SECTION 02900
GENERAL TREE PLANTING AND MAINTENANCE

PART 1 PLANTING

A. Site factors which influence long-term survivability should be considered: overhead and underground utility, sidewalks, signage conflicts, traffic visibility, light poles etc.

B. All synthetic or non-degradable material such as nylon rope or treated burlap should be removed from the root ball prior to planting. All material including biodegradable material should be removed from the upper 1/3 of the ball. Prevent remaining pieces from extending above the soil or they can act as wicks, drying the soil.

C. If trees are planted with wire baskets around the root ball, it is recommended that the top two tiers of wire are cut and removed after the ball is set in the hole.

D. Dig a hole at least 3-5 times the diameter of the root ball and the same depth as the root ball.

E. Position the tree in the center of the hole with the top of the soil ball even with the surrounding ground.

F. Backfill with soil from planting site if the soil is not contaminated. All large rocks should be removed. When hole is half full slowly water to saturate soil and then continue to fill the hole.

G. Water thoroughly to: remove air pockets, secure the soil around the roots, and provide nourishment.

H. Rake soil evenly around entire planting area.

PART 2 MULCHING

A. Mulch an area at least 3 times the diameter of the root ball to a depth of 2-4" with wood chips, bark mulch, shredded mulch leaves, or pine needles.

B. Replenish mulch as it decomposes.

PART 3 STAKING

A. Stake only if necessary. For example, if the tree will not stand on its own, or to prevent wind throw damage or vandalism or as directed by ENGINEER.

B. Do not use wire even if wire is inside of garden hose.

C. Use flexible materials such as strapping or commercially available ties that give as the tree diameter increases. Biodegradable material is recommended.

D. Stakes and ties should remain no longer than 1 year to avoid girdling the tree.

PART 4 PRUNING

A. At the time of planting dead, damaged, and rubbing or cross branches can be removed.

B. Remove sucker sprouts from the base of the tree.

C. Do not remove more than 1/3 of the crown at any time.

D. Corrective pruning can begin after one year of establishment in the new location.

PART 5 WATERING

A. Establish a regular watering schedule. Slow deep watering is recommended.

B. Water on an as needed basis during extremely hot or dry periods.

C. As tree growth progresses, be sure to water the surrounding soil area to promote root spread.

D. Some species of trees or sites may need more frequent or less frequent watering. Soil moisture and tree health should be monitored and watering adjusted accordingly. Non-irrigated sites typically need to be monitored more closely.

.

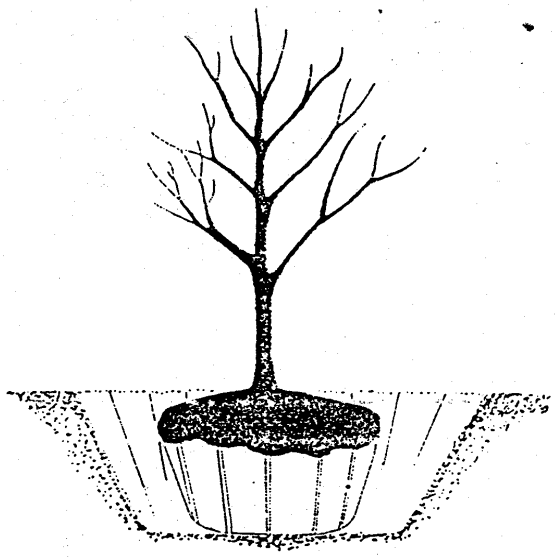

A

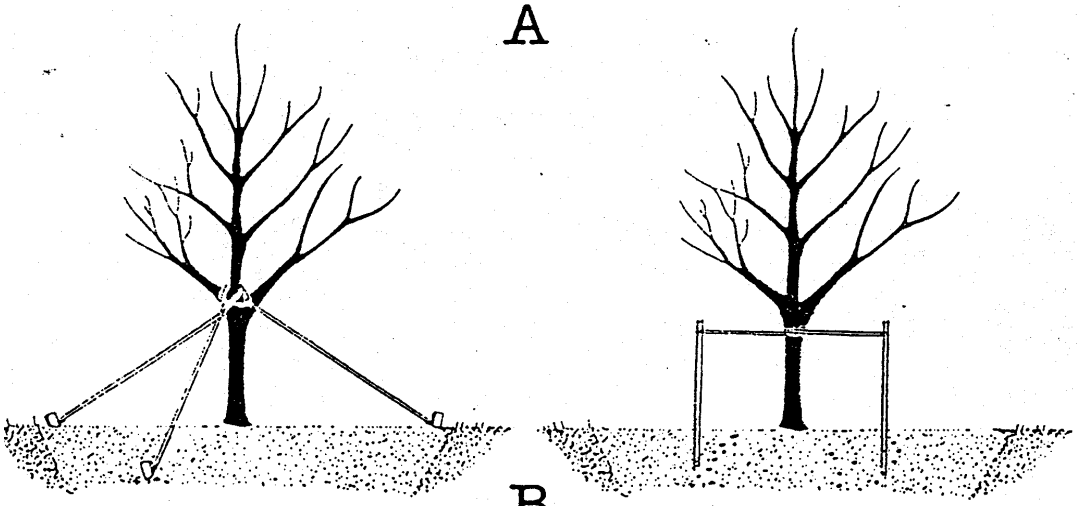

B

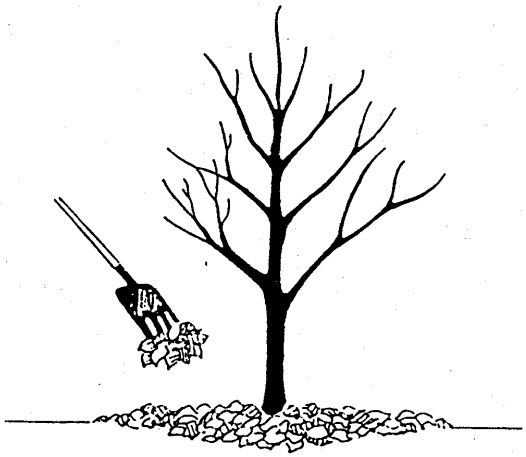

A - PLANTING

B - STAKING

C - MULCHING

C

SECTIONS 02925
FINISH GRADING AND GRASSING

PART 1 GENERAL

1.1 WORK INCLUDED

A. This section covers the work necessary for establishing a standard of grass, including furnishing and placing of grass sod, and fertilizing, watering, and maintenance of sodded areas.

B. See CONDITIONS OF THE CONTRACT and Division 1, GENERAL REQUIREMENTS, which contain information and requirements that apply to the work specified herein and are mandatory for this project.

C. Areas disturbed by the CONTRACTOR whether inside or outside the limits of the trench area shall be restored in accordance with this section. Areas outside the limits of trench shall be restored at the CONTRACTOR'S sole expense.

1.2 SUBMITTALS

A. Shop Drawings: Product labels/data sheets.

B. Quality Control Submittals: Certification of sod, include source harvest date of sod and sod seed mix.

PART 2 PRODUCTS

2.1 SOD

A. Sod shall be grown by a certified turf nursery. The CONTRACTOR shall inform the OWNER as to the source of the sod to be used prior to ordering and delivery of sod.

B. Sod shall be St. Augustine Floratam, free of weeds or growth detrimental to economical maintenance, proper establishment, or appearance of completed turf. It shall be well matted with roots and certified in writing to be free of weeds and mole crickets by the supplier. Mow to height of 3 inches before lifting.

C. Dimensions: The sod shall be taken up in commercial-size rectangles, 12 inches by 24 inches or larger, except where 6-inch strip sodding is called for.

2.2 WATER

A. Water used in the grassing operations may be obtained from FKKA. The CONTRACTOR shall make all arrangements and pay for the cost of all

water required for the establishment and maintenance of the grass.

2.3 TOPSOIL

A. Topsoil shall be crushed lime rock screening or tailings of a graduation similar to coarse sand.

PART 3 EXECUTION

3.1 INSTALLATION

A. These areas shall be fine graded to achieve the finished subgrade after compaction which shall be obtained by rolling, dragging, or by an approved method which obtains an equivalent compaction to that produced by a hand roller weighing from 75 to 100 pounds per foot of width. All depressions caused by settlement or rolling shall be filled with additional existing or furnished topsoil and regraded and prepared as specified above until it presents a reasonably smooth and even finish as the required sod subgrade.

B. All sod furnished shall be living sod containing at least 70 percent of thickly Matter grasses as specified and free from noxious weeds.

C. No broken pads or torn or uneven ends will be accepted. Standards size sections of sod shall be strong enough to support own weight and retain their size and shape when suspended vertically with a firm grasp on the upper 10 percent of the section. Sod shall not be harvested when its moisture content (excessively wet or dry) may adversely affect its survival.

D. Sod shall harvested, delivered, and installed within a period of 36 hours. Sod not installed within this time period shall be subject to inspection and rejection by OWNER and shall be removed from the side and a fresh sod supply shall be furnished at no extra cost to the OWNER.

E. The subgrade shall not be moist at time of installation; however, it should contain sufficient moisture so as not to be powdery or dusty, both as determined by the supplier’s representative.

F. The overlapping of existing lawn with new sod along limit of work lines will not be permitted. Sod shall be laid in stripes, edge, with the lateral joints staggered. All minor or unavoidable openings in the sod shall be closed with sod plugs or with topsoil, as directed by the ENGINEER. However, sod laid with joints determined to be too large shall be lifted and 43 lay as specified herein at no extra cost to the OWNER.

G. Immediately after the sod is laid, the sod shall be watered thoroughly by hand or mechanical sprinkling until the sod and at least 2 inches of the top soil bed have been thoroughly moistened.

H. CONTRACTOR shall be responsible to furnish his own supply of water to the site at no extra cost.

3.2 MAINTENANCE

A. Maintenance Period: Begin maintenance immediately after each portion of grass is planted and continued for 8 weeks after all planting is completed.

B. Maintenance Operations: Maintenance shall include watering as specified, weeding and removal of stones, which may appear. All bear or dead spots which become apparent shall be properly prepared, limed and fertilized, and resodded at CONTRACTOR's expense as many times as necessary to secure a good growth. Mow to 2 inches after grass reaches 3 inches in height, and mow frequently enough to keep grass from exceeding 3-1/2 inches. Weed by local spot application of selective herbicide only after first planting season when grass is established.

C. Take whatever measures are necessary to protect the sod while it is developing. These measures shall include furnishing or warning signs, barriers, or any other necessary measures of protection.

D. If, at the end of the 8-week maintenance period, a satisfactory stand of grass has not been produced; the CONTRACTOR shall renovate and resod the grass or unsatisfactory portions thereof immediately.

3.3 INSPECTION FOR ACEPTANCE

A. Eight weeks after the start of maintenance on the last section of completed grass and on written notice from the CONTRACTOR, the ENGINEER will, within 15 days of such a written notice, make an inspection to determine if a satisfactory stand has been produced. If a satisfactory stand has not been established, another inspection will be made after written notice from the CONTRACTOR that the grass is ready for inspection following the next growing season.

END OF SECTION

SECTION 02930
SEEPAGE TRENCH

PART I-GENERAL

A. The work included in this Section consists of clearing, excavating, back filling, grading and compacting the areas required for the construction of a seepage trench as shown on the Details and as specified herein.

B. The Contractor shall be responsible for having determined to his satisfaction, prior to the submission of his bid, the conformation of the ground, the type and quality of the substrata, the types of materials to be encountered, the nature of groundwater conditions and all other matters which can in any way affect the work in this Section.

C. The price established in the Proposal for the construction of the seepage trench will reflect all costs pertaining to the work, and no claims for extra work based on substrata or groundwater table conditions will be allowed.

PART 2 - MATERIALS

A. Ballast rock shall be # 4 coarse aggregate and free of any foreign material.

B. Pea rock, shall be 1/2 inch in diameter and free of any foreign material, and be used as surface material.

PART 3 - EXECUTION

A. The excavation of the seepage trench shall be by the open cut method. Walls of the excavation shall be kept vertical and, if required for the safety of workman and the general public, properly sheeted and braced, Materials encountered in the excavation which have a tendency to flow into the excavation, undermine the banks, weaken the overlying strata or are rendered unstable by the excavation operation shall be retained by sheeting, stabilization or other approved method.

B. The material excavated from the seepage trench shall become the property of the contractor and shall be removed and disposed of properly by the contractor immediately after excavation.

C. The seepage trench shall be excavated to a depth of ten (10) feet below the finish grade elevation or until, as determined by the Engineer, cap rock is hit.

D. Where the ballast rock material is deposited in water the layer and density requirements shall not apply until a one-foot layer of comparatively dry material is obtained. This one-foot layer shall be thoroughly compacted by tamping. The filling above water shall be

deposited in horizontal layers not exceeding eight (8) inches in depth, and shall be thoroughly compacted.

E. The surface material pea rock shall be deposited in 8 inch lifts and compacted, the top of which shall be no lower in elevation than the surrounding surface. The pea rock shall be graded and rolled to assure that no rutting or other distortion will occur.

END OF SECTION

DIVISION 3

CONCRETE

SECTION 03001
CAST-IN-PLACE CONCRETE

PART 1 GENERAL

1.01 RELATED DOCUMENTS:

A. Drawings and general provisions of Contract, including General and Supplementary Conditions and other Divison-1 Specification Sections, apply to this Section.

1.02 DESCRIPTION OF WORK:

A. Formwork, shoring, bracing, and anchorage.
B. Concrete reinforcement and accessories.
C. Cast-in-place concrete.
D. Non-shrink grout.

1.03 TESTS:

A. Testing and analysis of concrete will be performed in accordance with ACI-301. Smooth form finish/rubbed.

B. Submit proposed mix design for each class of concrete to appointed firm for review prior to commencement of work.

C. Testing firm will take cylinders and perform slump and air entrainment tests in accordance with ACI 301.

D. Tests of cement and aggregates will be performed to ensure conformance with requirements stated herein.

E. One slump test will be taken for each set of test cylinders taken.

1.04 SUBMITTALS:

A. Submit shop drawings of reinforcing steel in accordance with Section 01001 and the CRSI Manual of Standard Practice.

1. Indicate reinforcement sizes, spacing, locations and quantities of reinforcing steel, bending and cutting schedules, splicing, and supporting and spacing devices.

PART 2 - PRODUCTS

2.01 FORM MATERIALS:

A. Conform to ACI 301.

2.02 FILL

A. GRANULAR FILL: Natural sand not having any piece of material larger than 1-inch, free from dirt, clay balls, or organic material, well graded from coarse to fine, containing sufficient finer material for proper compaction, and less than ten (10) percent by weight passing the No. 200 sieve. Payment shall be per the unit Price bid.

B. EARTH FILL: Earth must be free from rocks 2-inches or larger and other foreign materials. Earth fill is incidental to contract prices and may be obtained from the work sites.

2.03 REINFORCING STEEL:

A. Reinforcing steel: ASTM A615, 60 ksi yield grade billet steel deformed bars, uncoated finish.

B. Welded Steel Wire Fabric: Plain type, ANSI/ASTM A185; coiled rolls; uncoated finish.

2.04 CONCRETE MATERIALS:

A. Cement: ASTM C150, normal – Type 1 Portland, Grey color.

B. Fine and Coarse Aggregates: ASTM C33.

C. Water: Clean and not detrimental to concrete.

2.05 ADMIXTURES:

A. Air Entrainment Admixture: ASTM C260

2.06 ACCESSORIES:

A. Vapor Barrier: ASTM D2103, 6 mil thick clear polyethylene film.

B. Non-Shrink Grout: premixed compound with non-metallic aggregate, cement, water reducing and plasticizing agents, capable of minimum compressive strength of 5000 psi.

C. Dovetail Anchor Slots: Galvanized steel; foam filled, release tapes; sealed slots; bent tab anchors.

D. Waterstops: Polyvinyl chloride; heat sealed joints.

2.07 CURING MATERIALS:

A. Water: Clean and drinkable.

B. Membrane Curing Compound: ASTM C309.

C. Clear Sealer Hardener: Chemhard or Fluohard by L7M Construction Chemicals, Inc.; Masterseal by Master Builders; Spartan Cote Cure-Seal-Hardener by the Burke Company.

2.08 CONCRETE MIX:

A. Mix concrete in accordance with ASTM C94.

B. Concrete

1. Compressive Strength (28 days): 3000 psi
2. Slump: Not less than 2” and not more than 5”.

PART 3 – EXECUTION

3.01 FORMWORK ERECTION:

A. Verify lines, levels, and measurement before proceeding with formwork.

B. Hand trim sides and bottom of earth forms; remove loose dirt.

C. Align form joints.

D. Do not apply form release agent where concrete surfaces receive special finishes or applied coatings that may be affected by agent.

E. Coordinate work of other sections in forming and setting openings, slots, recesses, chases, sleeves, bolts, anchors, and other inserts.

3.02 REINFORCEMENT:

A. Clean reinforcement of loose rust and mill scale, earth, and other materials that destroy bond with concrete.

B. Place, support, and secure reinforcement against displacement.

C. Install welded wire fabric in as long lengths as practical. Lap joints at least one full mesh and lace with wire. Hold mesh to top of slab when pouring cone.

3.03 PLACING CONCRETE:

A. Notify the City a minimum 24 hours prior to commencement of concrete placement operations.

END OF SECTION

SECTION 03002
CONCRETE PLACEMENT, CURBS AND SIDEWALKS

1. SCOPE

1.1.1 WORK INCLUDED: This section covers all formed concrete work reinforced and non-reinforced as required by the Project indicated on the plans or specified by the ENGINEER. **The CONTRACTOR is responsible for all site work and construction supervision required to meet ADAAG /ADA specifications when placing concrete.**

1.2 SUBMITTALS DURING CONSTRUCTION:

A. Submittal during construction shall be made as required in PART 4 General Requirements.

1.2.1 SUBMITTALS REQUIRED FOR:

a. Concrete - Submit data sheets
b. Granular fill - Submit data sheets
c. Expansion joint fillers - Submit data sheets
d. Traffic paint - Submit data sheets
e. Asphalt concrete cold patch - submit data sheets
f. Asphalt Hot Mix – submit data sheets
f. Sod - submit data sheets
h. Detectable Warnings System: - submit data sheets
i. Concrete Sealer - submit data sheets
j. Detectable warning system paver- submit data sheets

2. MATERIALS

2.1 FORMS:

2.1.1 Materials for curb forms shall be 2-inch dressed dimension lumber, fiberglass, or metal of equal strength, free from defects which would impair the appearance or structural quality of the complete curb. Where short-radius forms are required, 1-inch dressed lumber or plywood may be used. Form material for the face of the curb shall not have any horizontal joints closer than 7-inches from the top of the curb. Provide stakes and bracing materials as required to hold forms securely in place. Metal forms shall be subject to approval by the ENGINEER. Forms are incidental to the Contract Price.

2.1.2

Materials for sidewalk forms shall be 2-inch dressed lumber straight and free from defects or fiberglass or standard metal forms may be used. Where short radius forms are required, 1-inch dressed lumber is required to hold forms securely in place.

2.2 GRANULAR FILL: Natural sand not having any piece of material larger than 1-inch, free from dirt, clay balls, or organic material, well graded from coarse to fine, containing sufficient finer material for proper compaction, and less than ten (10) percent by weight passing the No. 200 sieve. Payment shall be per the unit Price bid.

2.3 EARTH FILL: Earth must be free from rocks 2-inches or larger and other foreign materials. Earth fill is incidental to contract Prices.

2.4 EXPANSION JOINT FILLERS: Expansion joint fillers shall conform to F.D.O.T. Standard Specifications for Road and Bridge Construction 2000. Submit complete information regarding joint fillers for approval by the ENGINEER. Payment shall be per unit price bid.

2.5 CONCRETE: Concrete shall be ready-mixed conforming to ASTM C 94, Alternate 2, and shall have a compressive strength of 3,000 psi at 28 days. Maximum size of aggregate shall be 1-inch to 1-1/2 inches. Slump shall between 2 and 4 inches. Submit complete information regarding mix to the ENGINEER for review in accordance with the requirements of the referenced ASTM Specification. Payment for completed concrete structures shall be paid as bid in the Proposal.

2.6 DETECTABLE WARNING SYSTEM: Detectable Warning Systems on walking surfaces shall be "Endicott Handicap Detectable Warning Paver" or equal with raised truncated domes and specified color and must meet federal ADAAG guidelines. Payment shall be per unit Price bid.

2.9 CONCRETE SEALING: Shall be "Lambert Clear Colorseal" and "Lambert Waterban 90 Siloxane Resin" or equal and follow all manufacturers' instructions for each installation. Payment shall be per unit Price bid.

2.10 TRAFFIC MARKING PAINT: Reflective traffic marking paint shall conform to F.D.O.T. Specifications Section 971. Paint for curbs shall be Pride Baker Paint brand traffic marking paint or approved equal. Paint and labor shall be incidental to contract price for replacement markings and the unit price bid for new markings.

2.11 ASPHALT: Cold patch asphalt. Asphalt and labor shall be incidental to the contract price for patches surrounding curbs and sidewalks. Hot mix asphalt conforming to FDOT R-3 shall be paid at the unit price bid for Asphalt paving repairs.

2.12 GRASSING: See Finish Grading and Grassing. Sod shall be of the St. Augustine Floratam type, conforming to FDOT Division III Section 981 and Division II Section 575. Payment shall be paid as bid in the Proposal.

2.13 ACCEPTANCE OF MATERIALS: All materials shall be subject to inspection for suitability, as the ENGINEER may elect, Prior to or during incorporation into the work.

3. WORKMANSHIP

3.1 EXCAVATION AND BACKFILL:

3.1.1 Cut the existing sidewalk regardless of the thickness, with an approved pavement saw or approved pavement cutter wherever sidewalk edges do not follow straight lines. Saw cutting of concrete shall be wet down to reduce air borne contamination. Remove and dispose of sidewalk at the CONTRACTOR's expense.

3.1.2 Prior to excavation of the sidewalk the CONTRACTOR's superintendent and the OWNER's ENGINEER or designee shall, together, walk the length of the site marking the limits of the excavation and marking any other pertinent information. Paint shall be supplied by the CONTRACTOR, incidental to the cost of the Contract.

3.1.3 At the time of each walk through described in Section 3.1.2, each water meter box and sewer cleanout shall be inspected for structural integrity. Those which are deemed in need of replacement at that time will be supplied by the CONTRACTOR at the unit price bid or the Florida Keys Aqueduct Authority. Those which meet normal structural and functional standards, and are broken by the CONTRACTOR during the construction Process shall be replaced by the CONTRACTOR at his cost.

a) Sewer cleanout boxes shall be made from 100% homogenous polyethylene material having a minimum wall thickness of .550 inch, a compartment size of 12-inches by 20-inches with a clear opening of 10-inches by 17-inches. Provide knockouts or notches in each end sized to allow placement of a 6-inch PVC pipe inside the box. Vertical crush to exceed 20,000 pounds and sidewall loading to exceed 180 pounds per square inch. A flange shall encircle the top area for installation in concrete. Cleanout covers shall be cast of ductile conforming to ASTM A-536-84; grade 60-40-18.The meter box covers shall meet or exceed Federal specifications RR-F-621D for a minimum Proof load of 25,000 pounds on 9”x 9” area. All boxes and covers shall be manufactured by Mid- States Plastics, Mount Sterling, KY. Florida Master Distributor: Okie Dokie Sales, Inc.
(888-914-772) or approved equal.

b) Water meter boxes shall be Mid- States MS # 15P meter box or equal, covers shall have cast iron reading lid.

3.1.4 As directed by the ENGINEER remove any unsuitable material to such a depth that the addition of the subgrade and granular fill can be placed and compacted. Unsuitable material shall consist of and not be limited to top soil, wood, root matter, stumps, trunks, roots or root systems. Excavation that cannot be accomplished without endangering present structures shall be performed with hand tools.

3.2 PREPARATION OF SUBGRADE: Bring the areas on which curbs and sidewalks are to be constructed to required grade and compact to 95 percent ASTM D 1557 by sprinkling and rolling or mechanical tamping. As depressions occur, refill with approved material and recompact until the surface is at the proper grade.

3.3 PLACING GRANULAR FILL: After the subgrade for sidewalks and curbs is compacted and at the proper grade, spread 4-inches or more of granular fill. Sprinkle with water and compact to 95 percent ASTM D 1557 by rolling or other method. Top of the compacted fill shall be at the proper level to receive the concrete. Granular fill shall be used, when needed, to raise the level of grade to allow for proper thickness of concrete. After spreading fill, compact to 95 per cent.

3.4 SETTING FORMS:

3.4.1 Construct forms to the shape, lines, grades, and dimensions as required for proper installation or as called for on the drawings or as directed by the ENGINEER. Stake wood or steel forms securely in place, true to line and grade.

3.4.2 Provide forms at front and back of curbs. Forms on the face of the curb shall not have any horizontal joints within seven (7) inches of the top of the curb. Brace forms to prevent change of shape or movement in any direction resulting from the weight of the concrete during placement. Construct short-radius forms to exact radius. Tops of forms shall not depart from grade line more than 1/8-inch when checked with a ten-foot straightedge. Alignment of straight sections shall not vary more than 1/8-inch in ten (10) feet.

3.5 CURB/GUTTER CONSTRUCTION:

3.5.1 Construct curbs to line and grade of curbs and gutters removed, as shown on plans or as established or directed by the ENGINEER. Curbs shall conform to F.D.O.T. Type "D" or "F" or as directed by the ENGINEER.

3.5.2 Handicap ramps shall be constructed at locations shown on the drawings or as directed by the ENGINEER and in conformance with legal requirements.

3.5.3 Place preformed asphalt-impregnated expansion joints at intervals not exceeding 100 feet, at the beginning and ends of the curved portions of the curbs and at inlets.

3.5.4 Place contraction joints in the curb at intervals not exceeding fifteen (15) feet. Contraction joints shall be of the open joint type and shall be provided by inserting a thin, oiled steel sheet vertically into the fresh concrete to force coarse aggregate away from the joint. The steel sheet shall be inserted the full depth of the curb. Place, process, finish and cure concrete in conformance with the applicable requirements of ACI 614, and this Specification. Whenever the requirements differ, the higher shall govern. After initial set has occurred in the concrete and prior to removing the front curb form, the steel sheet shall be removed with a sawing motion. Finish top of curb with a steel trowel and finish edges with a steel edging tool.

3.5.5 As soon as the concrete has set sufficiently to support its own weight, remove the front form and finish all exposed surfaces. Finish formed face by rubbing with a burlap sack or similar device that will produce a uniformly textured surface, free of form marks, honeycombs and other defects. All defective concrete shall be removed and replaced at the CONTRACTOR's sole expense.

3.5.6 Upon completion of the curing period, backfill the curb with earth, free from rocks 2-inches and larger and other foreign materials. Tamp backfill firmly in place.

3.5.7 Finished curb shall present a uniform appearance for both grade and alignment. Remove any section of curb showing abrupt changes in alignment or grade, or which is more than 1/4-inch away from its location as staked, and construct new curb in its place at the CONTRACTOR's sole expense.

3.5.8 Upon completion of the curing period fill with asphalt any street side holes or ruts in the asphalt paving that was created by the installation of the sidewalk or the curb. When required by ENGINEER, saw cut, remove and replace sections as directed.

3.5.9 Where curbs that were painted for legal traffic markings (i.e., loading zones, driveways, no parking zones) prior to construction are removed, replaced, repaired or installed. These and any newly constructed curbs and sidewalks shall be repainted by the CONTRACTOR. Painting shall be performed upon completion of the curing period, but not less than seven (7) days have elapsed since pouring the concrete. Curbs are to be painted from the inside edge of the curb to the edge of the pavement.

3.6 SIDEWALK CONSTRUCTION:

3.6.1 Sidewalks shall be four-inches or six-inches thick as directed by the ENGINEER.

3.6.2 Place preformed asphalt expansion joints as in the adjacent curb, where the sidewalk ends at a curb, around posts, poles, concrete buildings or walls or other objects protruding through the sidewalk, and at locations shown on the Drawings.

3.6.3 Provide dummy joints transversely to the walks at locations opposite the contraction joints in the curb and at intervals not exceeding five (5) feet. These joints shall be 1/4-inch by 1-inch weakened plane joints. They shall be straight and at right angles to the surface of the walk.

3.6.4 Place, process, finish, and cure concrete in conformance with the applicable requirements of ACI 614 and this Specification. Where the requirements differ, the higher shall govern.

3.6.5 Broom the surface with a fine hair broom at right angles to the length of the walk and tool all edges, joints and markings. Mark the walks transversely at five (5) foot intervals with a jointing tool. Protect the sidewalk from damage for a period of seven (7) days.

3.6.6 Sidewalks shall be placed to slope towards the street at a maximum slope of 2% or as otherwise directed by the ENGINEER.

3.6.7 Where sidewalks or curbs which were painted for legal traffic markings (i.e., loading zone, driveways, no parking zones) are removed and replaced with new curb or sidewalk or repaired, the CONTRACTOR shall be responsible to paint the new portions of the curbs or sidewalks in accordance with Section CURB CONSTRUCTION 3.5.9.

3.6.8 Upon completion of the curing period fill with asphalt, any street side holes or ruts in the asphalt paving that were created by the installation of the curbs or sidewalks.

3.7 GRANITE CURB RESTORATION:

3.7.1 Granite Curb Restoration shall take place in locations as directed by the ENGINEER.

3.7.2 The existing granite curb shall be removed from the ground and stored in a manner to preserve their quality and quantity as specified in the General Requirements. The CONTRACTOR shall be solely and directly responsible to the OWNER for any curbing removed during the contract period.

3.7.3 After curb removal excavation and backfill shall be performed as specified in Specifications Section 3.1 through 3.4.

3.7.4 Curbing shall be reset, prior to sidewalk pour, as specified in the drawings, or as otherwise directed by the ENGINEER.

3.7.5 Any pavement disturbed by curb restoration shall be repaired as specified in Section 3.5.8

3.7.6 Curbs that were painted with legal traffic markings (i.e., loading zones, driveways) prior to removal shall be repainted as directed by the ENGINEER.

3.8 GRASSING

3.8.1 Grassing shall take place in locations as directed by the ENGINEER. All grassing shall be sodding.

3.8.2 Sodding: Before sod is laid, correct soft spots and inequalities in grade of prepared bed. Lay so that no voids occur and tamp or roll, brush or rake granular fill with no lumps or stones larger than 3/4-inch over sodded area, water sod thoroughly. Complete sod surface true to finished grade, even and firm.

3.8.3 Maintenance:

1. Maintenance period: Begin maintenance immediately after each portion of lawn and grass is planted and continue for 8 weeks after all lawn planting is completed.

2. Maintenance Operations: Water to keep surface soil moist. Repair washed out areas by filling with topsoil, liming, fertilizing and seeding. Mow to 3 inches after grass reaches 4 inches in height, and mow frequently enough to keep grass from exceeding 4 inches. Weed by local spot application of selective herbicide only after first planting season when grass is established.

3.8.4 Guarantee:

1. If, at the end of the 8-week lawn maintenance period, a satisfactory stand of lawn or grass has not been produced, the CONTRACTOR shall renovate and reseed the lawn or grass or unsatisfactory portions thereof immediately.

2. A satisfactory stand is defined as a lawn or grass or section of lawn or grass that has:

   a. No bare spot larger than 3 square feet.
   b. not more than 10 percent of total area with bare spots larger than 1 square foot.
   c. Not more than 15 percent of total area with bare spots larger than 6 inches square.

3.8.5 Inspection for Acceptance: Eight weeks after the start of maintenance on the last section of completed lawn, and on written notice from the CONTRACTOR, the ENGINEER will, within 15 days of such written notice, make an inspection to determine if a satisfactory stand has been produced. If a satisfactory stand has not been established, another inspection will be made after written notice from the CONTRACTOR that the lawn is ready for inspection following the next growing season.

3.9 DETECTABLE WARNING & CONCRETE SEALING

3.9.2 DETECTABLE WARNING SYSTEM: Detectable Warning Systems on walking surfaces shall be "Endicott Handicap Detectable Warning Paver" or equal with raised truncated domes and specified color or equal and follow all manufacturers' instructions for installation and sealing and meet federal ADAAG guidelines.

3.9.4 CONCRETE SEALING: Shall be Lambert Colorseal and /or Lambert Water ban 90 Siloxane Resin or equal and follow all manufacturers' instructions for each installation.

END OF SECTION

DIVISION 13

SPECIAL CONSTRUCTION

SECTION 13510
CLEANING OF EXISTING SANITARY SEWERS

PART 1 GENERAL

1.1 WORK INCLUDED

A. This Section covers the work required to clean existing sanitary sewer pipes. The work includes, but is not limited to, furnishing all labor, materials, and equipment required to:

1. Remove roots.
2. Clean.
3. Provide internal inspection and logs of inspection results for existing sanitary sewer pipes in the Key West Sewer System. This work also includes any wastewater flow control necessary to perform the work.

PART 2 PRODUCTS

2.1 CLEANING EQUIPMENT - GENERAL

A. Cleaning equipment shall be either hydraulically propelled, high-velocity hydrocleaning equipment shall be brought in for finish cleaning at no additional cost to the OWNER. Selection of the equipment used shall be based on the conditions of the lines at the time the work commences. The equipment and methods selected shall be satisfactory to the OWNER and ENGINEER.

2.2 HIGH-VELOCITY HYDROCLEANING EQUIPMENT

A. Cleaning equipment shall utilize high pressure water pumped through a hose and nozzle propelled through the sewer by water discharged from the nozzle.

B. The equipment shall have a minimum of 600 feet of high pressure hose with a selection of two or more high velocity nozzles. The nozzles shall have a minimum capacity of 60 gpm at a minimum working pressure of 1,200 pounds per square inch (measured at the pump), sand shall be capable of producing a scouring action from 15 to 45 degrees in all size pipes designated to be cleaned. Equipment shall also include a high velocity gun for washing and scouring manhole walls and floor. The gun shall be capable of producing flows from a fine spray to a long distance solid stream. The gun capacity shall be a least 10 gallons per minute at 200 pounds per square inch. The equipment shall carry its own water tank, auxiliary engines, pumps and hydraulically driven hose reel.

C. The CONTRACTOR shall demonstrate to the satisfaction of the ENGINEER that the equipment CONTRACTOR proposes to use meets all requirements of these Specifications, including minimum working pressure. The demonstration shall occur at a location within Key West designated by the ENGINEER. This demonstration shall be considered incidental.

2.3 MECHANICAL CLEANING EQUIPMENT

A. Bucket machines shall be operated in pairs with each machine powered by an engine with a minimum of 16 horsepower to ensure sufficient pulling power. Machines shall be belt operated or have an overload device. Machines with direct drive that could cause damage to the pipe will not be allowed.

B. Power rodding machines shall be a continuous rod-type capable of holding a minimum of 1,000 linear feet of rod. The machine shall have a positive rod drive to produce a 2,000-pound rod pull. To ensure safe operations, the machine shall have a fully enclosed body and an automatic safety throw-out clutch and other safety and other safety equipment required by law.

C. Bucket machines and rodders shall be equipped with proper tools for all types of cleaning in the sizes of pipe in which work is to be performed.

PART 3 EXECUTION

3.1 GENERAL

A. The following general procedure shall be followed to clean the pipes designated. The work shall be accomplished completely in one manhole section at a time. A manhole section is defined as the length of pipe connecting two manholes:

1. Remove roots from the pipeline segments as required by the ENGINEER.
2. Clean a manhole section including removal of dead roots.

3.2 ROOT REMOVAL

A. At least 14 days prior to treating the roots with chemical root remover the pipeline shall be cleaned to remove excess debris and trapped solid material. Application shall be by use of the chemical in foam form or by soaking. Apply according to manufacturer's written directions, to completely fill the pipeline segment for at least the minimum time specified by the manufacturer. It is the CONTRACTOR's complete responsibility to schedule operations to attain the chemical contact time and subsequent waiting period needed for the effective use of the chemicals, as recommended by the manufacturer, before proceeding with further work.

3.3 CLEANING

A. Clean the manhole section using the cleaning equipment specified and necessary to properly clean the manhole section. All roots remaining after chemical removal, sludge, dirt, sand, rocks, grease, and other solid or semisolid material resulting from the cleaning operation shall be removed at the downstream manhole, or at pump stations shall be removed prior to discharge into the pump station. All solids or semisolids resulting from the cleaning operation shall be removed from the site and disposed of by the CONTRACTOR at sites approved by the appropriate regulatory agencies. All hauling of material shall be in accordance with regulatory agency requirements. Under no circumstances shall sewage or

solids removed from the downstream manhole be dumped onto the streets or into ditches, catch basins, or storm drains. All materials shall be removed from the site no less often than at the end of each workday. Under no circumstances will the CONTRACTOR be allowed to accumulate debris, etc., on the site of work beyond the stated time.

B. Whenever bucket machines are used, the bucketing process shall be in one manhole section at a time. A bucket of proper size shall be placed in the downstream manhole and pulled at intervals towards the upstream manhole until the entire manhole section has been cleaned. Upon completion of the bucketing operation, hydraulically propelled or high-velocity sewer cleaning equipment shall be used to ensure that all sand, grease, and other fine materials have been removed.

C. If cleaning of an entire manhole section cannot be successfully performed from one manhole, the CONTRACTOR shall reset up his equipment in a manner so that the cleaning can be attempted from the opposite manhole. If, again, successful cleaning cannot be performed or the equipment fails to traverse the entire manhole section, it will be assumed that a major blockage exists and the cleaning work shall be considered complete and no additional cleaning work will be required for that manhole section. The cost of resetting up at the opposite manhole shall be considered incidental to the work involved.

D. The CONTRACTOR shall be responsible for and repair of, at no cost to the OWNER, any damage to structurally sound lines caused by use of the sewer cleaning equipment. Further, the CONTRACTOR shall be responsible for any damage to properties connected to the sewer, which result from the sewer cleaning operation.

END OF SECTION

DIVISION 15

MECHANICAL

SECTION 15085
GRAVITY AND PRESSURE PIPE

PART 1 GENERAL

1.1 WORK INCLUDED

A. This section covers all work necessary for the installation of gravity and pressure pipe and fittings of the sizes and classes indicated. Service connection pipe is specified in Section SEWER SERVICE CONNECTIONS.

PART 2 PRODUCTS

2.1 GENERAL

A. Sizes and strength classifications of gravity pipe to be used in all locations are indicated. In all cases, the strength designation is based on concrete pipe standards except where other types of pipe are specifically indicated.

2.2 PIPE

*** Ductile iron pipe is not to be used on the gravity sanitary sewer system or the force main system.**

A.1 Polyvinyl Chloride (PVC) Gravity Pipe and Fittings:

1. 15 inch diameter PVC sewer pipe and under for general service shall conform to ASTM D3034, standard dimension ratio not to exceed 26.
2. PVC fittings for 15 inch diameter pipe and under for general service shall conform to ASTM D3034, standard dimension ratio not to exceed 35.
3. PVC pipe for watermains 12 inches and smaller shall be AWWA C900, standard dimension. Dimension ratio not to exceed 18
4. PVC pipe for storm and sanitary sewer pipe larger than 15 inches shall be AWWA C905, standard dimension ratio, not to exceed 26.
5. PVC additives and fillers including but not limited to stabilizers, antioxidants, lubricants, colorants, etc., shall not exceed 10 parts by weight per 100 of PVC resin in the compound.
6. All sanitary sewer pipe shall be green.

A2. Plastic pipe and fittings shall meet all the requirements of AWWA C900 and shall be PVC-1120 pipe, having a cell classification of 1245A or 1245B, in accordance with ASTM D1784. Pipe 4 inches and larger shall be pressure rated Class 150 (DR 18) with cast iron pipe equivalent OD in accordance with AWWA C900. Pipe shall be equipped with a push-on type joint with elastomeric gasket that meets the requirements of ASTM D3139. Pipe smaller than 4 inches shall be PVC Schedule 80, in accordance with ASTM D1785. Schedule 80 pipe and fittings shall be threaded joint.

A3. As specified by the ENGINEER fittings for 4-inch through 12-inch PVC pipe shall be ductile iron or PVC fittings with mechanical joints in conformance with Paragraph DUCTILE IRON PIPE AND FITTINGS, of this Section. Fittings for use with Schedule 80, PVC threaded pipe shall be PVC threaded pipe fittings, Schedule 80, PVC 1, and shall comply with the ASTM Standard Specification for Threaded PVC Plastic Pipe Fittings, Schedule 80, ASTM D2464-76.

B. Ductile Iron Pipe and Fittings: Ductile iron pipe shall be centrifugally cast of 60-42-10 iron and shall conform to ANSI A21.51 or AWWA C151. Thickness class shall be 51 for 4-inch pipe and 50 for 6-inch pipe and larger. The pipe shall be cement-mortar lined and seal coated in accordance with ANSI A21.4. Fittings shall conform to AWWA C110.

2.3 PIPE JOINTS

A. Ductile Iron Pipe Joints:

1. Gravity Pipe: Furnish ductile iron pipe with push-on joints.
2. Force Mains: Furnish ductile iron pipe with push-on joints. Furnish fittings with mechanical joints.
3. Mechanical joints or push-on joints shall conform to AWWA C111.
4. Furnish complete information on basic gasket polymer and results of tests for physical properties. Lubricant for jointing shall be as approved by manufacturer.

B. Polyvinyl Chloride (PVC) Gravity Pipe Joints: Joints shall be rubber gasketed type complying in all respects to the physical requirements of ASTM D3212 for gravity pipes. Gaskets shall conform to ASTM F477. Furnish complete information on basic gasket polymer and results of test of physical properties. Lubricant for jointing as approved by the pipe manufacturer.

C. PVC Pressure Pipe Joints: Furnish complete information on basic gasket polymer and results of tests of physical properties. Lubricant for jointing as approved by pipe manufacturer. An adapter as recommended by the pipe manufacturer shall be used for connecting PVC pipe to manholes.

D. Joints for Dissimilar Gravity Pipe: An approved flexible mechanical compression joint coupling with No. 305 stainless steel bands manufactured by Joints, Inc. (Calder) of Gardena, CA; Fernco Joint Sealer Co. of Ferndale, MI; or equal.

2.4 RESTRAINED JOINTS

A. Restrained joints in ductile iron pipe and fittings, where specified, may be of the types fabricated by the various manufacturers, upon approval by the ENGINEER of details submitted by the CONTRACTOR, except that field welding will not be acceptable, and the thickness of the pipe barrel remaining at grooves cut for harnessing shall not be less than the nominal wall thickness of the classes specified. Joints using gaskets with expanding metal inserts or friction type joints, such as retainer glands, will not be acceptable. The harnessing components, when not cast integrally with

the pipe, shall be ductile iron or a high strength non-corrosive alloy steel. Tee head bolts and hexagonal nuts for all restrained joints in pipe and fittings shall be of high strength cast iron with composition, dimensions, and threading as specified in ANSI / AWWA C111 / A21.11, except the length of the bolts shall meet the requirements for the harnessed joint design. If tie rods are required, they shall be connected with the use of Star Eyebolts, as manufactured by Star National Products of Columbus, OH. Tie rods, where approved by the ENGINEER, shall be stainless steel and shall be of the size and number required by the ENGINEER. Each thrust resistant joint, and the pipe and/or fittings of which it is a part, shall be designed to withstand the axial thrust from an internal pipeline pressure of at least 250 psi.

B. Restrained joint fittings shall be similar to mechanical joint fittings except the joint shall provide mechanical restraint. Friction type joints will not be allowed.

C. Submit detailed shop drawings showing the restrained joints and a pipe laying schedule showing fittings, restrained joints, etc. No pipe, fittings, or specials shall be manufactured until such shop drawings have been reviewed by the ENGINEER. The required number of restrained joints shall be determined in accordance with "Trust Restraint Design for Ductile Iron Pipe", 1984, by the Ductile Iron Pipe Research Association. Soil type shall be sand-slit (soil internal friction angle of 30 degrees, soil cohesion of 0 psf, and backfill density of 90 pcf) and a safety factor of 1.5 shall be used.

D. Valves that fall within restrained joint areas shall be restrained by means other than tie rods or retainer glands.

2.5 POLYETHYLENE WRAP FOR DUCTILE IRON PIPE FITTINGS

A. All ductile iron pipe fittings, both gravity and pressure, shall be wrapped with a polyethylene sleeve in accordance with ANSI A21.5, Method A. Polyethylene material shall conform with ASTM D1248.

2.6 WYE FITTINGS

A. Joints on all wye fittings shall be the same as the joints used on the sewer pipe. Caps or plug shall be furnished with each wye outlet or stub with the same type gasket and joint as furnished with the service connection pipe specified. The plug or cap shall be banded or otherwise secured to withstand all test pressures involved without leakage.

B. Furnish all wye outlets with gasketed type joint or approved adapter to join service connection pipe used.

2.7 PIPE BEDDING AND PIPE ZONE MATERIAL

A. Pipe bedding and pipe zone material shall be crushed gravel or crushed rock, free from dirt, clay balls and organic material and conforming to size **No. 89** gradations as specified in the Standard Specifications or similar accepted material and shall be imported at the CONTRACTOR's own

expense. Lime rock screenings or material resulting from trench excavation, except for lime rock which has been crushed and graded to size as specified, will not be accepted for pipe bedding and pipe zone material.

2.8 CONCRETE FOR THRUST BLOCKING AND CONCRETE ENCASEMENT

A. Conform to ASTM C94, Alternate 3, Proportion to obtain a 28-day compressive strength of 3000 pounds per square inch. Use a minimum of five sacks of cement per cubic yard of concrete.

2.9 MECHANICAL COUPLINGS

A. Mechanical couplings, not a part of the pipe itself, shall be cast iron couplings with rubber rings and ductile iron bolts and nuts. Couplings shall be as manufactured by Dresser Industries, Inc.; Rockwell International, Inc.; or equal.

2.10 LUBRICANT

A. Lubricant for mechanical joint and push-on joint and push-on joint piping shall be manufacturer's standard.

PART 3 EXECUTION

3.1 PREPARATION OF TRENCH

A. Pipe Bedding Material:

1. Grade: Grade the bottom of the trench by hand to the line and grade to which the pipe is to be laid, with proper allowance for pipe thickness and for pipe bedding. Before laying each section of the pipe, check the grade and correct any irregularities found. The trench bottom shall form a continuous and uniform bearing and support for the pipe between bell holes.
2. Granular Material for Pipe Bedding: Provide granular material for pipe bedding under all pipe. Place material in the trench to a minimum depth of 6 inches and to a level 1/2 of the outside diameter above the bottom of the pipe barrel. Particular attention must be given to the area from the flow line to the centerline of the pipe to ensure that firm support is obtained to prevent any lateral movement of the pipe during the final backfilling of the pipe zone. Grade the top of the bedding to the bottom of the pipe ahead of pipe laying for the full width of the trench. Bedding shall provide firm support along entire pipe length.
3. Bell (Joint) Holes: At the location of each joint, dig bell joint holes of ample dimensions in the bedding and at the sides where necessary to permit the joint to be made properly and to permit easy visual inspection of the entire joint.
4. Dewatering: Conform to Paragraph REMOVAL OF WATER in Section TRENCH EXCAVATION AND BACKFILL.

3.2 PIPE DISTRIBUTION

A. Distribute material on the job no faster than it can be used to good advantage. In general, distribute no more than one day's supply of material in advance of the laying, unless otherwise accepted by the ENGINEER. Unload pipe, which cannot be physically lifted by workers from the trucks, by a forklift, or other approved means. Do not drop pipe of any size from the bed of the truck to the ground.

3.3 PIPE PREPARATION AND HANDLING

A. Inspect all pipe and fittings prior to lowering into trench to ensure no cracked, broken, or otherwise defective materials are being used. Clean ends of pipe thoroughly. Remove foreign matter and dirt from inside of pipe and keep clean during and after laying.

B. Use proper implements, tools, and facilities for the safe and proper protection of the work. Lower pipe into the trench in such a manner as to avoid any physical damage to the pipe. Remove all damaged pipe from the jobsite. Do not drop or dump pipe into trenches under any circumstances.

3.4 LINE AND GRADE

A. Gravity Pipe:

1. Do not deviate from line or grade, as established by the ENGINEER, more than 1/2 inch for line and 1/4 inch for grade, provided that such variation does not result in a level or reverse sloping invert.

2. Measure for grade at the pipe invert, not at the top of the pipe, because of permissible variation in pipe wall thickness.

3. All gravity pipe shall be laid using a laser accepted by the ENGINEER. The beam shall be directed through the pipe. Batter boards or instrument laying will not be permitted. The laser shall be constantly shielded from the direct sun.

4. The CONTRACTOR shall set offset stakes or other accepted method of controlling alignment and grade for excavation of trenches and for pipe laying. The CONTRACTOR shall submit in writing his proposed method of establishing line and grade to the ENGINEER for acceptance.

5. When wastewater flows are too high, wastewater flows shall be controlled through the pipeline segment where the work is being performed. Plugging, bypassing pumping and other measures may be used as needed and as accepted by the ENGINEER. The CONTRACTOR shall be responsible to assess conditions and capacities of existing sewer lines and pump stations in order to implement an acceptable bypass plan at no additional cost to the OWNER. If pumping is

required, the CONTRACTOR shall supply the necessary pumps, conduits, and other equipment to not only divert the flow of sewage around the manhole section in which work is to be performed, but also to transmit the flow in downstream sewer lines and/or pump stations without surcharge. The bypass system or systems shall be of sufficient capacity to handle existing flows plus additional flow that may occur during periods of high tide or rainstorms. The CONTRACTOR will be responsible for furnishing the necessary labor and supervision to set up and operate the pumping and bypassing system. If pumping is required, all engines shall be equipped in a manner to keep the pump noise to a minimum.

B. The CONTRACTOR shall be responsible for any damage to properties or buildings connected to the system, and to the pipeline, which result from flow control activities.

C. Pressure Pipe: Minimum pipe cover shall be 3 feet unless otherwise indicated. Pipe cover shall be varied as required to avoid air pockets. Lay pipe on a continuously ascending or descending grade to the elevations required by the Drawings without intermediate high or low points.

3.5 THRUST BLOCKING

A. Take care not to over excavate in the areas where thrust blocks are to be poured. Remove all water from the excavation. Construct suitable forms to obtain shapes that will provide full bearing surfaces against undisturbed earth. Cure thrust blocks 5 days before conducting hydrostatic or air tests.

3.6 CONNECTIONS TO DISSIMILAR GRAVITY PIPE

A. Make connections with flexible mechanical joint couplings in accordance with the Detailed Drawings and the recommendations of the manufacturer. Use only when approved by the ENGINEER, and then only to make connections between dissimilar pipe or where standard rubber gasketed joints are impractical. Before the closure collar is poured, wash pipe to remove all loose material and soil from the surface on which the concrete will be placed. Wet nonmetallic pipe thoroughly prior to pouring the collars. Make entire collar in one pour and extend a minimum of 12 inches on each side of the joint. The minimum thickness around the outside diameter of the pipe shall be 6 inches. No collar shall be poured in water. After the collars are poured and have taken their initial set, cure by covering with well-moistened earth.

3.7 LAYING AND JOINTING PIPE AND FITTINGS

A. PVC Pipe:

1. Pipe laying shall proceed upgrade with spigot ends pointing in direction of flow. After a section of pipe has been lowered into the prepared trench, clean the end of

the pipe to be joined, the inside of the joint, and the rubber ring immediately before joining the pipe. Make assembly of the joint in accordance with the recommendations of the manufacturer of the type of joint used. Provide all special tools and appliances required for the jointing assembly.

2. After the joint has been made, check pipe for alignment and grade. The trench bottom shall form a continuous and uniform bearing and support for the pipe at every point between joints. Apply sufficient pressure in making the joint to assure that the joint is "home" as defined in the standard installation instructions provided by the pipe manufacturer. To assure proper pipe alignment and joint makeup, place sufficient pipe zone material to secure the pipe from movement before the next joint is installed. Pipe 21 inches and smaller shall be laid so the inside joint space does not exceed 3/8 inch in width

.

3. When pipe is laid within a movable trench shield, take all necessary precautions to prevent pipe joints from pulling apart when moving the shield ahead.

4. Take the necessary precautions required to prevent excavated or other foreign material from getting into the pipe during the laying operation. At all times, when laying operations are not in progress, at the close of the day's work, or whenever the workers are absent from the job, close and block the open end of the last laid section of pipe to prevent entry of foreign material or creep of the gasketed joints.

5. Plug or close off pipes, which are stubbed off for manhole construction or for connection by others with temporary plugs as specified in the manhole specifications.

6. Take all precautions necessary to prevent the "uplift" or floating of the line prior to the completion of the backfilling operation.

7. When cutting and/or machining the pipe is necessary, use only tools and methods recommended by the pipe manufacturer and approved by the ENGINEER.

B. Ductile Iron Pipe:

1. Mechanical joint ductile iron pipe varies slightly with different manufacturers. Install the particular pipe furnished in accordance with the particular manufacturer's recommendations, as approved by the ENGINEER.
2. Lay and join ductile iron pipe with rubber gasket type joints, in accordance with the manufacturer's recommendations, as approved by the ENGINEER. Provide all special tools and devices such as special jacks, chokers, and similar items required for the installation.

3.8 INSTALLATION OF SERVICE CONNECTION WYES

A. Install wye fittings in accordance with the Sewer Service Connection Details shown on the Drawings. Provide all wyes with caps or plugs, as specified. Provide a minimum 2-foot wide concrete encasement in trenches deeper than 12 feet.

3.9 BACKFILL AT THE PIPE ZONE

A. The pipe zone shall be considered to include the full width of the excavated trench from the bottom of the pipe to a point 12 inches above the top outside surface of the barrel of the pipe.

B. Pipe zone material as herein before specified shall be used for the full depth of the pipe zone and for the full width of the excavated trench for all pipe.

C. Hand place the material around the pipe in 6-inch layers and thoroughly hand tamp with approved tamping sticks supplemented by "walking in" and slicing with a shovel. Backfill the area of the pipe zone from the horizontal centerline to a point 12 inches above the top outside surface of the barrel of the pipe with selected material for pipe zone. Use particular attention in placing material on the underside of the pipe to provide a solid backing and to prevent lateral movement during the final backfilling procedure.

D. Conform to Paragraph TRENCH BACKFILL ABOVE THE PIPE ZONE.
See Section TRENCH EXCAVATION AND BACKFILL.

E. Backfill at the pipe zone for PVC pipe must receive particular attention and care to prevent damage to the pipe. Deflection of PVC pipe shall be kept to a minimum and in no case shall it exceed 5 percent of the pipe inside diameter. All PVC gravity lines shall be tested for deflection after installation and backfill by pulling a round plug equal to 95.0 percent of pipe base inside diameter, as defined in the Appendices of ASTM D3034, through the completed pipeline.

F. Magnetic / Metallic detection tape shall be installed over all service connection pipe. It shall be placed in accordance with the manufacturer’s directions, directly over the pipe at a depth of 12 inches below final grade.

3.10 CONCRETE ENCASEMENT

A. Concrete encasement will be used where the sanitary sewer line crosses the waterlines as shown on the Drawings. Place concrete backfill in such a manner that no dirt or foreign material becomes mixed with the concrete. Minimum thickness of concrete protection shall be 6 inches on the sides of the pipe. Concrete shall have sufficient time to reach initial set before any additional backfill material is placed in the trench. Place pipe base in all trenches requiring concrete backfill.

3.11 REMOVAL OF EXISTING LINES

A. The CONTRACTOR shall furnish all labor, materials and equipment required for the removal and disposal of existing storm and sanitary sewer lines including manholes, which are to be replaced by new construction utilizing the same trench. The existing lines to be removed are not considered worthy of salvage and therefore will be broken up and disposed of at the nearest legally operated landfill. Payment will be made for the removal of existing lines.

3.12 MATERIALS, TESTS, AND INSPECTIONS

A. PVC and Ductile Iron Pipe:

1. PVC and ductile iron pipe shall be inspected at the point of manufacture in accordance with the manufacturer's standard methods. Unless otherwise directed by the ENGINEER, provide a certificate of tests in lieu of witnessing the inspection and test procedures.
2. Pipe and accessories that are chipped, cracked, or contain other imperfections, or do not satisfactorily meet the manufacturer's standard test requirements, shall be rejected.

B. Lamping:

1. After flushing and cleaning, lamp gravity pipelines in the presence of the ENGINEER.

2. Assist the ENGINEER in the lamping operation of shining a light or mirror at one end of each pipeline section between manholes. The ENGINEER will observe the light at the other end. The CONTRACTOR shall supply all materials and equipment. Pipeline that has not been installed with uniform line and grade will be rejected. Remove and relay rejected pipeline sections. Reclean and lamp until pipeline section achieves a uniform line and grade to the satisfaction of the ENGINEER.

C. At the opinion of the ENGINEER, the inspection of gravity lines may include closed circuit TV.

D. To successfully pass the lamping or TV inspections the following shall be demonstrated:

1. No visible leaks.
2. Deflection of pipe shall not exceed 5 percent.
3. All pipe joints shall be aligned and none displaced.
4. Grade and alignment shall be continuous without sags or curvature from manhole-to-manhole.

E. Repair or replace, in a manner accepted by the ENGINEER, any section of pipe not meeting the lamping or TV inspection, at no cost to the OWNER.

3.13 HYDROSTATIC TESTING OF PRESSURE LINES

A. General

1. Conduct pressure and leakage tests on all pressure lines. Furnish all necessary equipment and material and make all taps in the pipe as required. The ENGINEER will monitor the tests.

2. Furnish the following equipment and materials for the tests:

Amount	Description
2	Graduated containers
2	Pressure gauges
1	Hydraulic force pump
	Suitable hose and suction pipe as required

3. Conduct the tests after the trench has been completely backfilled. The CONTRACTOR may, if field conditions, and determined by the ENGINEER, permit, partially backfill the trench and leave the joints open for inspection and conduct an initial test. The acceptance test shall not, however, be conducted until all backfilling has been completed. Where any section of pipe is provided with concrete thrust blocking, the pressure test shall be conducted for 5 days after the concrete blocking is installed. If high-early cement is used for the concrete thrust blocking, the curing time may be reduced to 2 days.

B. Procedure:

1. After backfilling, fill pipe with water. Test pressure shall be 150 psi calculated for the low end of the pipe, or as directed by the ENGINEER. Expel all air from pipe prior to test. Make up any water lost by absorption and then apply test pressure with suitable pump. Valve off line when test pressure is reached and conduct pressure test for 2 hours. At end of test period raise to test pressure with pump.

2. Leakage is quantity of water necessary to restore the test pressure at end of test period. Leakage shall not exceed the gallons per hour as determined by the formula:

$$L = \frac{ND\,(P)^{1/2}}{7400}$$

In the above formula:

L = Allowable leakage, in gallons per hour
* N = Number of joints in the length of pipe tested
D = Nominal diameter of pipe, in inches
P = Test pressure during the leakage test, in pounds per square inch

* Figure two joints per coupling for asbestos-cement pipe couplings.

3. Repair or replace any test section of pipe with leakage greater than that allowed under the above formula until the leakage is within the specified allowance at no cost to the OWNER.

3.14 FINAL SANITARY SEWER CLEANING

A. Prior to final acceptance and final manhole-to-manhole inspection of the sanitary sewer system by the ENGINEER, flush and clean all parts of the system, both pressure and gravity. Remove all accumulated construction debris, rocks, gravel, sand, silt, and other foreign material from the sanitary sewer system at or near the closest downstream manhole. If necessary, use mechanical rodding or bucketing equipment.

B. Upon the ENGINEER's final manhole-to-manhole inspection of the sanitary sewer system, if any foreign matter is still present in the system, reflush and clean the sections and portions of the lines as required.

END OF SECTION

SECTION 15102
MANUALLY OPERATED VALVES AND CHECK VALVES

PART 1 GENERAL

1.1 WORK INCLUDED

A. This section covers the work necessary for furnishing and installing the various manually operated valves and check valves.

1.2 GENERAL

A. Like items of equipment specified herein shall be the end products of one manufacturer in order to achieve standardization for operation, maintenance, spare parts, and manufacturer's service.

B. See CONDITIONS OF THE CONTRACT and Division 1, GENERAL REQUIREMENTS, which contain information and requirements that apply to the work specified herein and are mandatory for this project.

1.3 SUBMITTALS DURING CONSTRUCTION

A. Submittals during construction shall be made as required in Division 1, GENERAL REQUIREMENTS.

PART 2 PRODUCTS

2.1 GENERAL

A. All valves shall be complete with all necessary extension stems, operating nuts, chains, and wrenches, which are required for the proper completion of the work, included under this Section.

B. Renewable parts including discs, packing, and seats shall be of types recommended by valve manufacturer for intended service.

C. All units shall have the name of the manufacturer and the size of the valve cast on the body or bonnet or shown on a permanently attached plate in raised letters.

D. For the purpose of designating the type and grade of valve desired a manufacturer's name and list or figure number is given in the following specifications. Valves of equal quality by other manufacturers will be considered in accordance with the General Conditions. Valves shall be eccentric type as manufactured by DeZurik, Clow or equal.

2.2 DESIGN FEATURES

A. Brass and Bronze Components:

1. Brass and bronze components of valves and appurtenances, which have surfaces in contact with the water, shall be alloys containing less than 16 percent zinc and 2 percent aluminum.
2. Approved alloys are of the following ASTM designations:

   a. B61, B62, B98 (Alloy UNS No. C65100, C65500, or C66100), B139 (Alloy UNS No. C51000), B584 (Alloy UNS No. C90300 or C94700), B164, B194, and B127.

   b. Stainless steel Alloy 18-8 may be substituted for bronze at the option of the manufacturer and with the approval of the ENGINEER.

3. All gland bolts on iron body valves shall be bronze and shall be fitted with brass nuts.

2.3 VALVE OPERATORS

A. All valve operators shall open by turning counterclockwise. Operators used on manually operated valves shall be of totally enclosed design, so proportioned as to permit operation of the valve under full operating head with a maximum pull of 40 pounds on the hand wheel or crank. The valve operators shall be of the self-locking type to prevent the disc or plug from creeping.

2.4 VALVE BOXES

A. Valve boxes shall be Buffalo two-piece sliding type, cast iron, with 5 1/4 inch shaft of appropriate length for the installation. The word WATER or SEWAGE shall be cast into the top of the lid, as appropriate for the service. Extension pieces, if required, shall be the manufacturer's standard type. Units shall be Mueller H-10364, Clow Corporation F-2452, or equal. All units shall be complete with all necessary bases and accessories.

2.5 EXTENSION STEMS FOR VALVE OPERATORS

A. Where the depth of the valve is such that its centerline is more than 4 feet below grade, operating extension stems shall be provided to bring the operating nut to a point 6 inches below the surface of the ground and/or box cover. Extension stems shall be constructed of steel and shall be complete with 2-inch square operating nuts.

2.6 EXTENSION BONNETS FOR VALVE OPERATORS

A. Where shown on Drawings, extension bonnets shall be supplied, complete with stem and accessories, as required to fit the given valves and operators. Bonnet and stem shall be

constructed of steel and given manufacturer's standard paint system. Bonnets shall be as supplied by Pratt, Allis-Chalmers, or equal.

2.7 VALVES

A. See herein before subparagraph DESIGN FEATURES for additional material requirements.

2.8 PLUG VALVES

A. V405: Eccentric plug valves 4 inches and larger shall be of the non-lubricated type, suitable for buried service. Valves 8 inches and larger shall be provided with gear actuators, capable of providing drip tight shutoff to 100 psi pressure differential with the pressure in either direction. Valves with mechanical joint ends, balanced plug coated with neoprene elastomer, Buna-Vee packing or O'ring seals, stainless steel bearings, and nickel seats. Valve shaft seals or packing shall be adjustable and replacement without removing the valve from service or interrupting service with flow in either direction. Valve exteriors shall be provided with two coats of Koppers 300 M, 16 mil DFT each coat, or equal. Valves shall be DeZurik Series 100, Figure 118; Homestead Figure 1122 and 1132 or 1222 and 1232, as applicable; or equal.

PART 3 EXECUTION

3.1 GENERAL

A. Before installation, carefully clean valves of all foreign material, adjust stuffing boxes and inspect valves in open and closed positions. Install valves in accordance with the applicable portions of these Specifications. Unless otherwise indicated, install valves with the stem vertical. Mount horizontal valves in such a manner that adequate clearance is provided for operation. Installation practices shall conform to manufacturer's recommendations.

B. Prior to installing flanged valves; the flange faces shall be thoroughly cleaned. After cleaning, insert the gasket and tighten the nuts progressively and uniformly. If flanges leak under pressure, loosen the nuts, reseat or replace the gasket, retighten the nuts, and retest the joint. Joints must be watertight at test pressures before acceptance.

C. Thoroughly clean threads of screwed joints by wire brushing, swabbing, or other approved methods. Apply approved joint compound to threads prior to making joints. Joints shall be watertight at test pressures before acceptance.

D. Valves that fall within restrained joint areas shall be restrained by means other than tie rods or retainer glands, except that retainer glands may be used for valves 10 inches and smaller.

3.2 VALVE BOXES

A. Center the valve boxes and set plumb over the wrench nuts of the valves. Set valve boxes so that they do not transmit shock or stress to the valves. Set the valve box covers flush with

the surface of the finished pavement as shown. Cut extensions to the proper length so that the valve box does not ride on the extension when set at grade.

B. Backfill shall be the same as specified for the adjacent pipe. Place backfill around the valve boxes and thoroughly compact to a density equal to the specified for the adjacent trench and in such a manner that will not damage or displace the valve box from proper alignment or grade. Misaligned valve boxes shall be excavated, plumbed, and backfilled at the CONTRACTOR's sole expense.

3.3 TESTING

A. Valves shall be tested at the same time that the adjacent pipeline is tested. Joints shall show no visible leakage under test. Repair joints that show signs of leakage prior to final acceptance. If there are any special parts of control systems or operators that might be damaged by the pipeline test, they shall be properly protected. The CONTRACTOR will be held responsible for any damage caused by the testing.

B. If requested by the ENGINEER, the valve manufacturer shall furnish an affidavit stating the materials options furnished and/or that he has complied with these and other referenced specifications.

END OF SECTION

PART 5

DETAILS

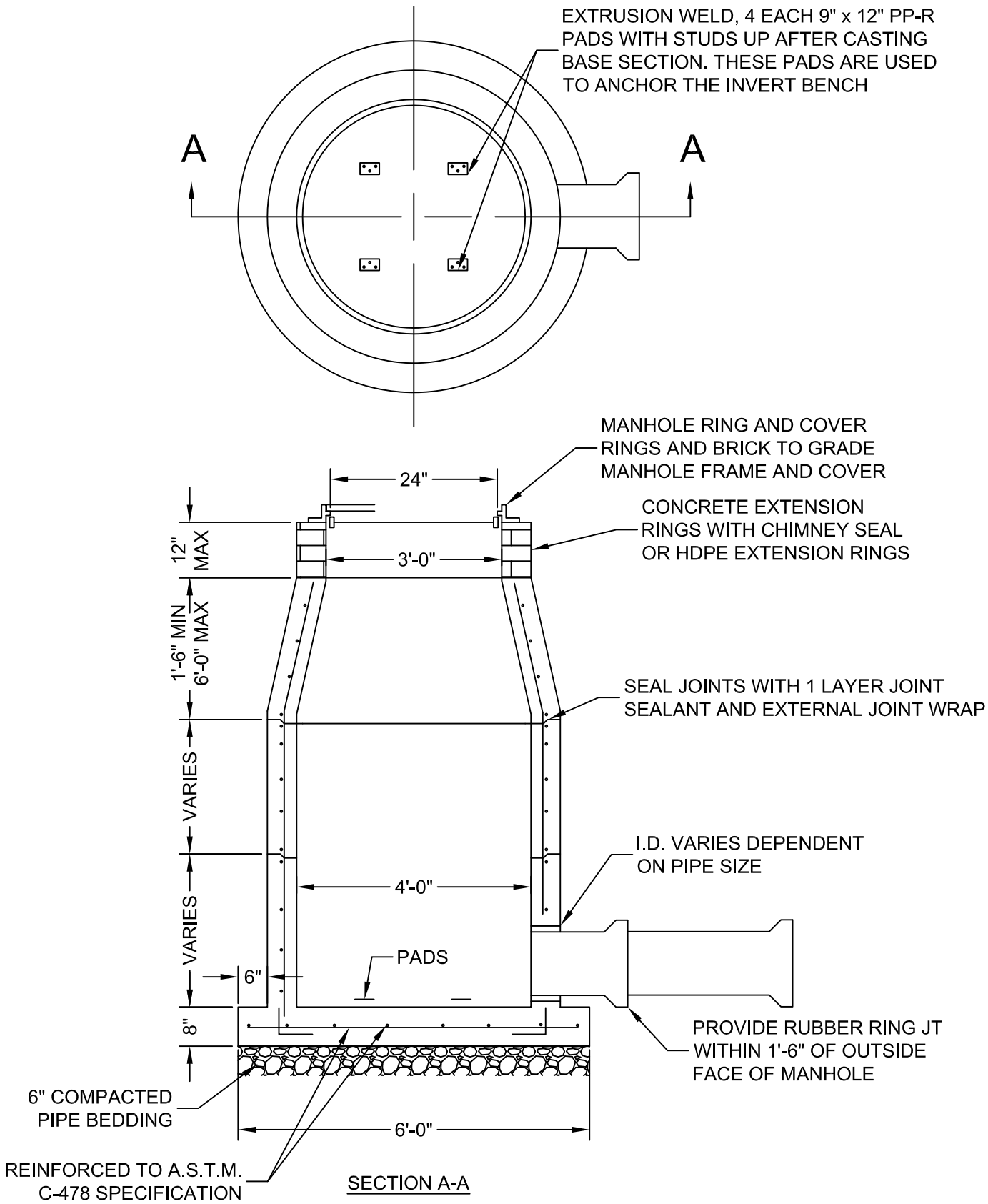

City of Key West Engineering Services 3132 Flagler Avenue, Key West, FL 33040	TITLE PRECAST MANHOLE		
	DRAWN JTJ SCALE NTS	STANDARD DETAIL	JUL 2015 DETAIL 1

NOTE: SANITARY SEWER MH COVER SHOWN.
WHERE STORM WATER MH IS SPECIFIED,
COVER SHALL READ " STORM SEWER"

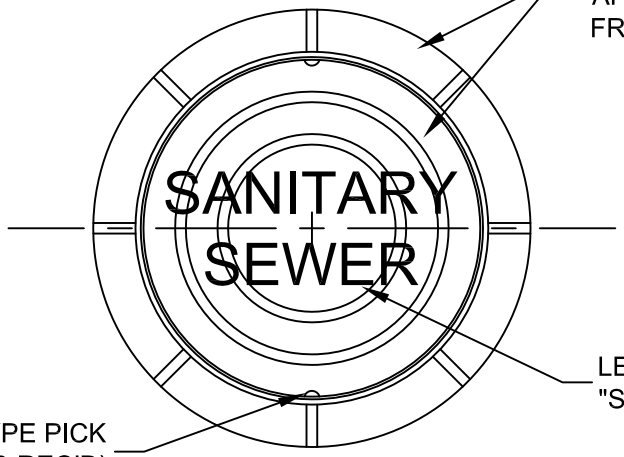

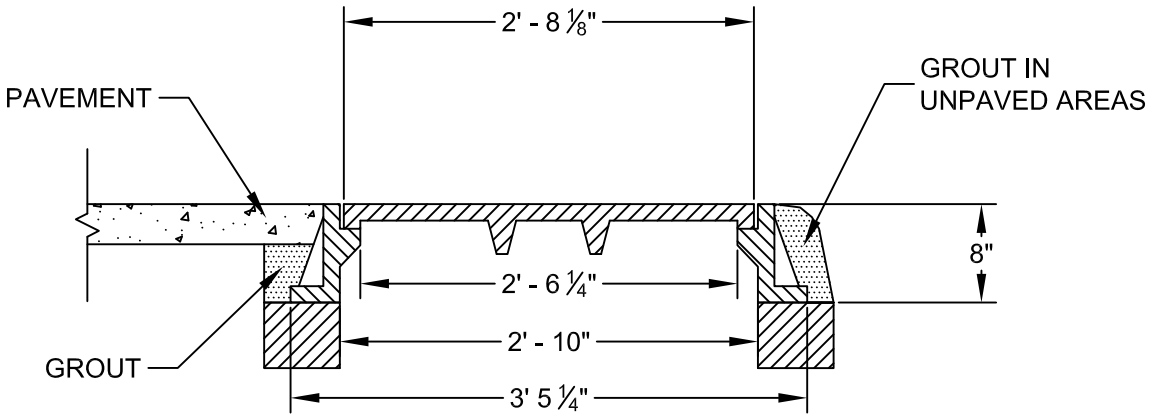

City of Key West Engineering Services 3132 Flagler Avenue, Key West, FL 33040	TITLE STANDARD SANITARY/STORM MANHOLE		
	DRAWN JTJ SCALE NTS	FRAME AND COVER	JUL 2015 DETAIL 2

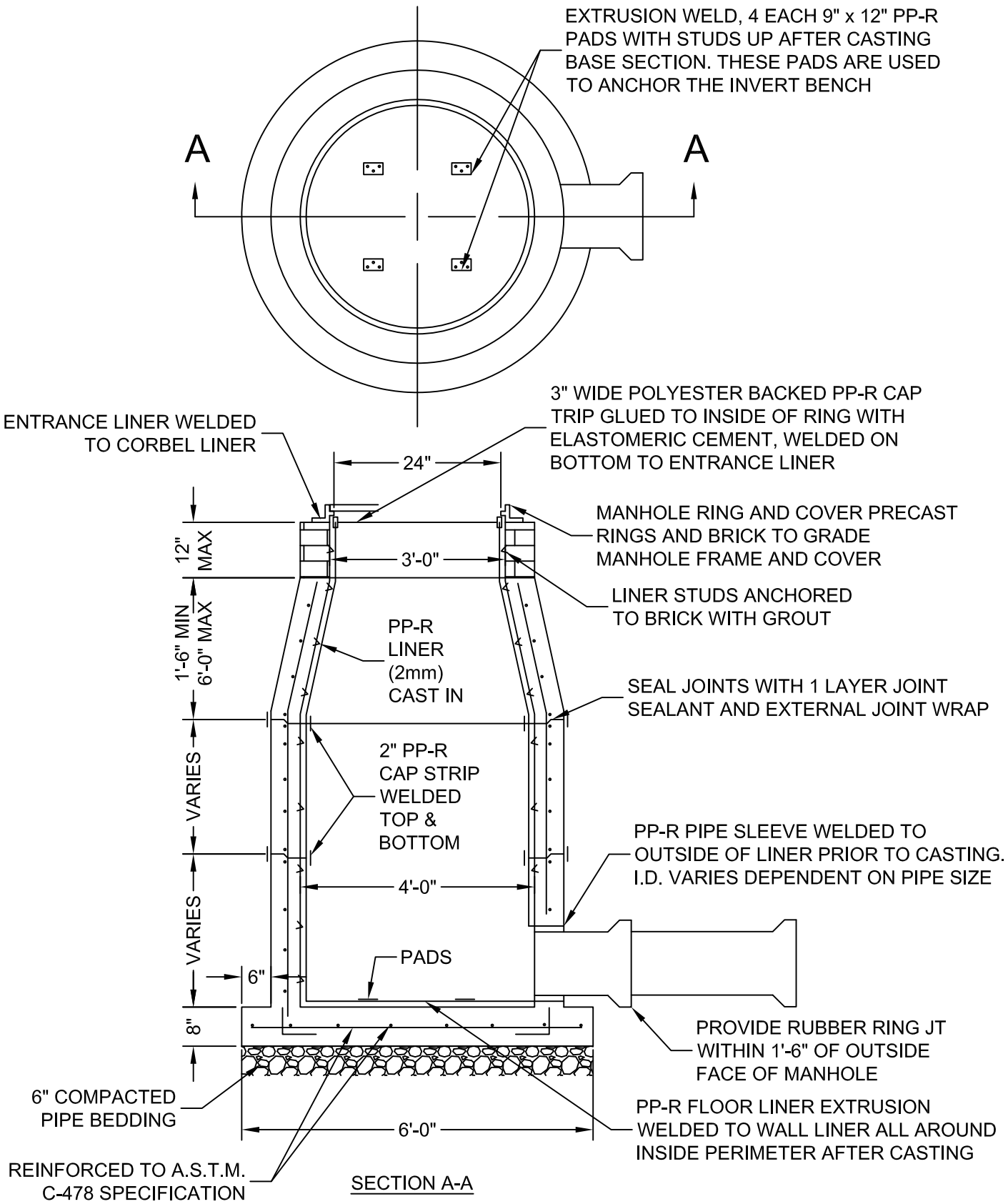

City of Key West Engineering Services 3132 Flagler Avenue, Key West, FL 33040	TITLE LINED PRECAST MANHOLE		
	DRAWN JTJ SCALE NTS	STANDARD DETAIL	JUL 2015 DETAIL 3

NOTE: SANITARY SEWER MH COVER SHOWN.
WHERE STORM WATER MH IS SPECIFIED,
COVER SHALL READ " STORM SEWER"

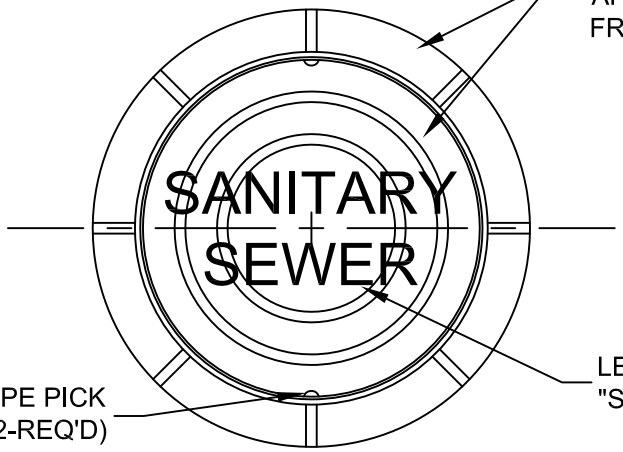

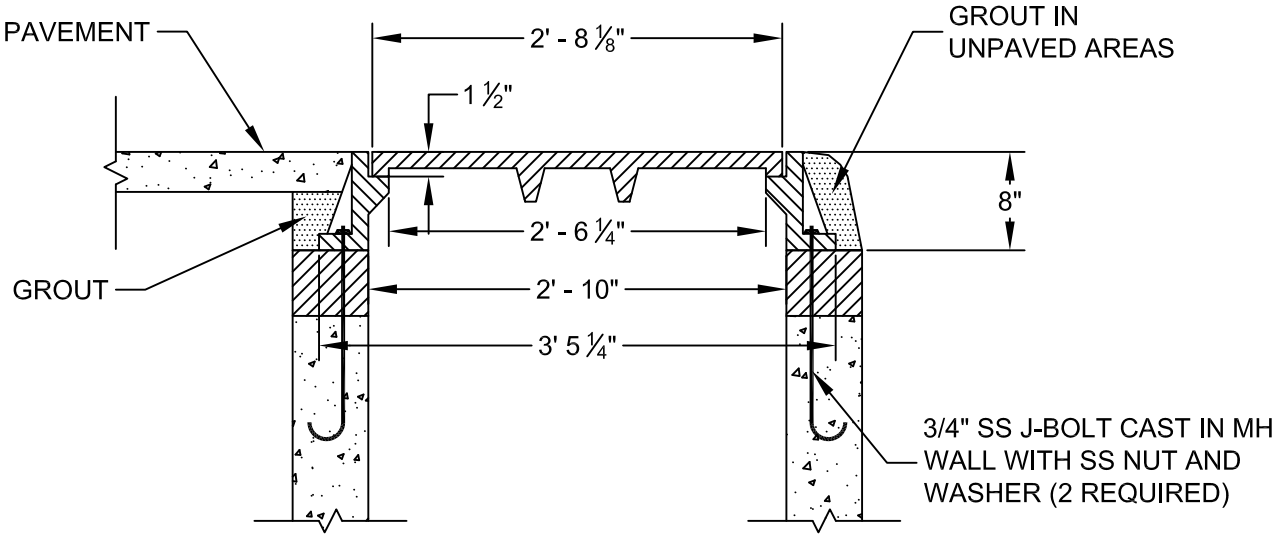

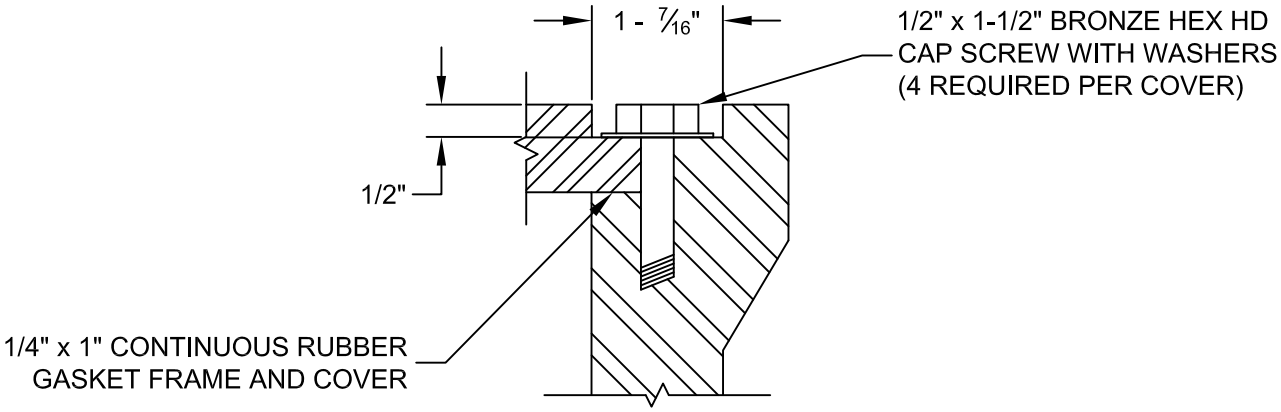

City of Key West Engineering Services 3132 Flagler Avenue, Key West, FL 33040	TITLE WATERTIGHT SANITARY/STORM MANHOLE			
	DRAWN JTJ	FRAME AND COVER	JUL 2015	
	SCALE NTS		DETAIL 4	

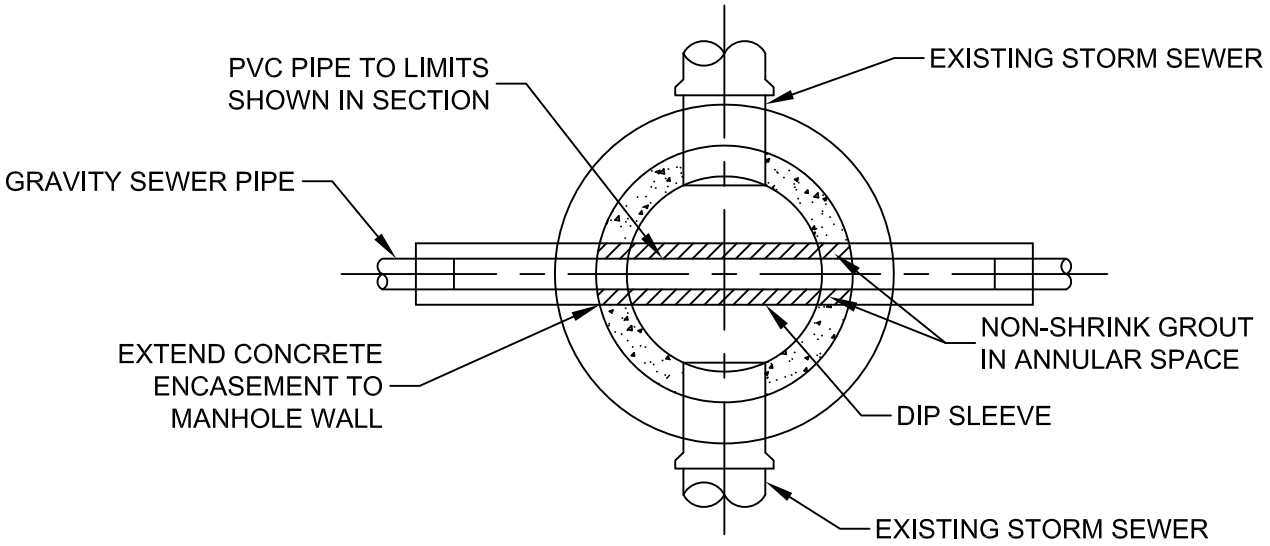

PLAN VIEW

NOTE: CONTRACTOR SHALL DETERMINE PIPE SIZES, PIPE INVERT ELEVATIONS AND ANGLES OF PIPE ENTRY AND EXIT

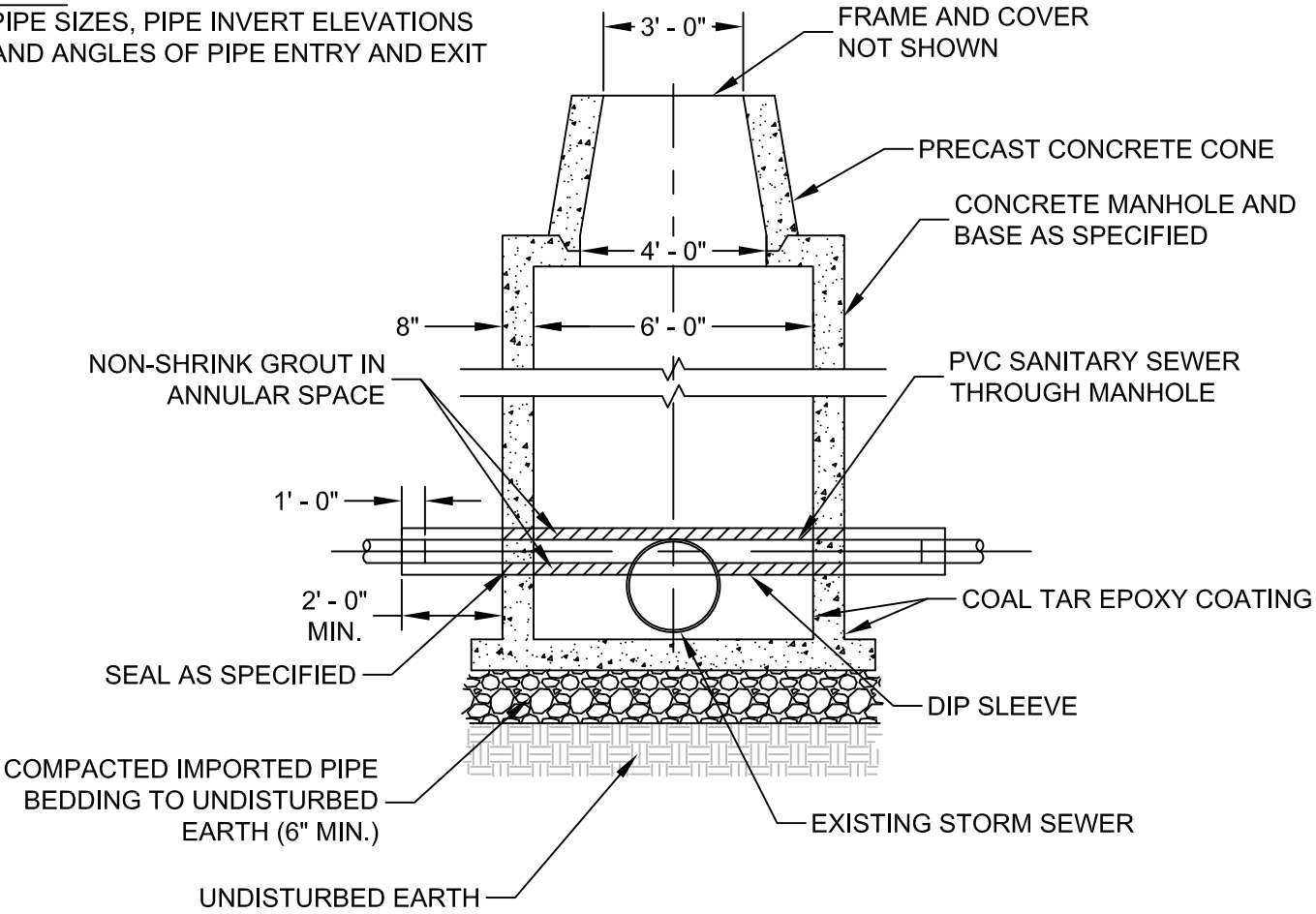

SECTION

City of Key West Engineering Services 3132 Flagler Avenue, Key West, FL 33040	TITLE CONFLICT MANHOLE		
	DRAWN JTJ SCALE NTS	DETAIL	JUL 2015 DETAIL 5

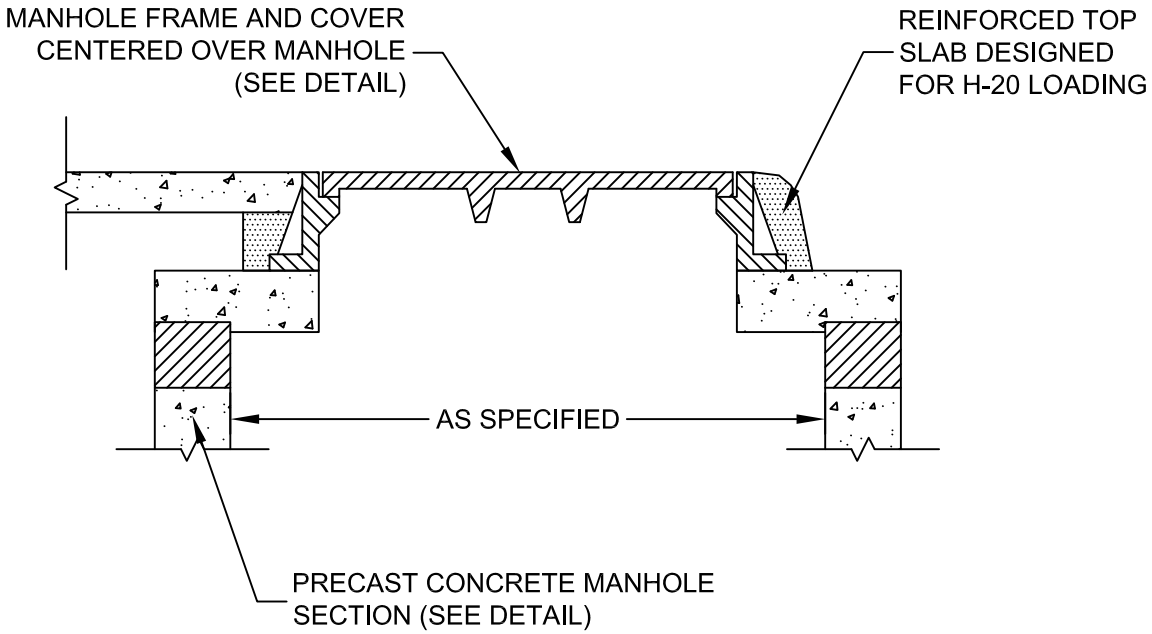

City of Key West	TITLE	FLAT TOP MANHOLE		
Engineering Services 3132 Flagler Avenue, Key West, FL 33040	DRAWN JTJ SCALE NTS	DETAIL		JUL 2015 DETAIL 6

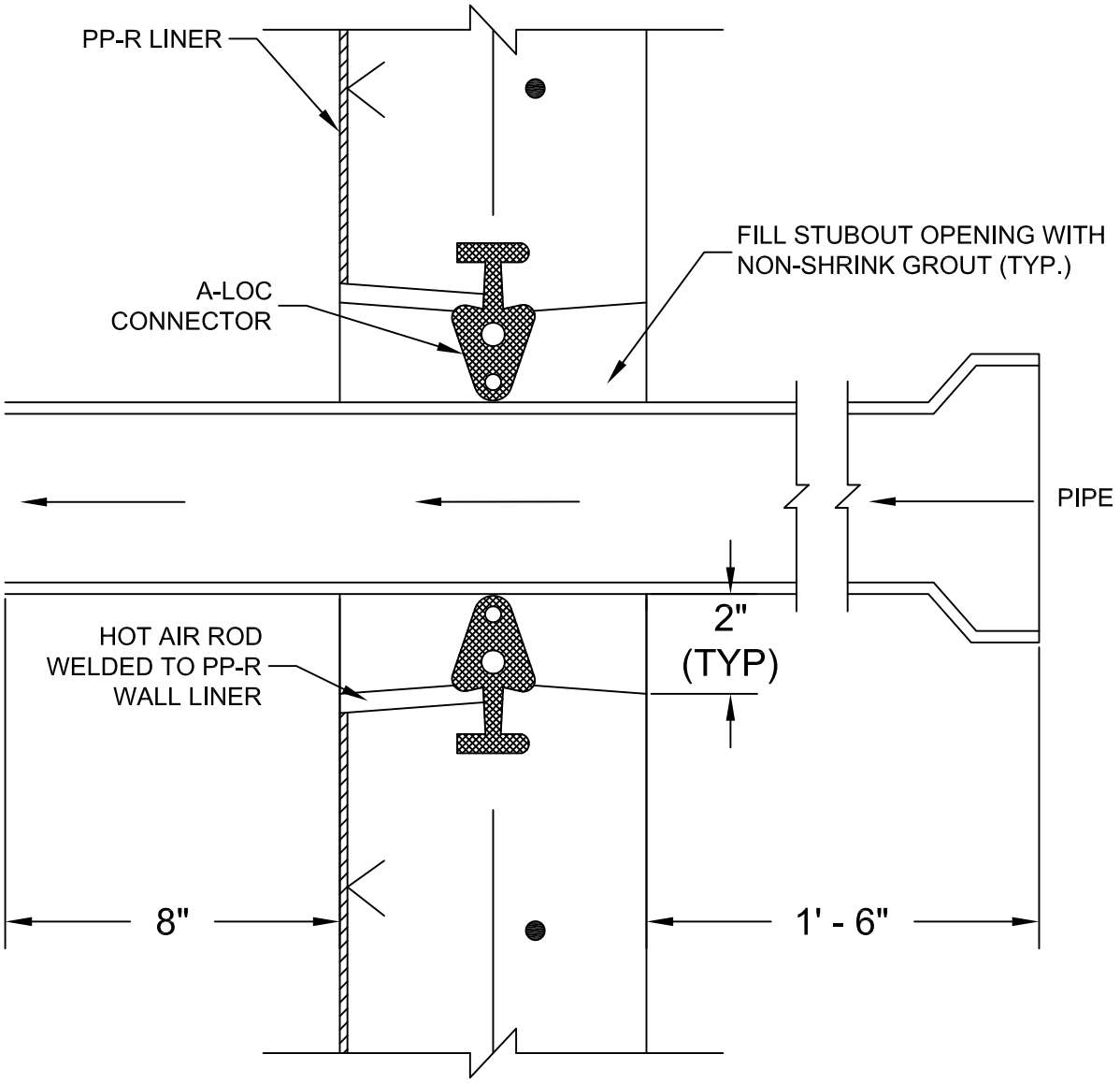

(PP-R LINER ONLY)

City of Key West Engineering Services 3132 Flagler Avenue, Key West, FL 33040	TITLE SEWER STUBOUTS IN MANHOLES			
	DRAWN JTJ	DETAIL	JUL 2015	
	SCALE NTS		DETAIL 7	

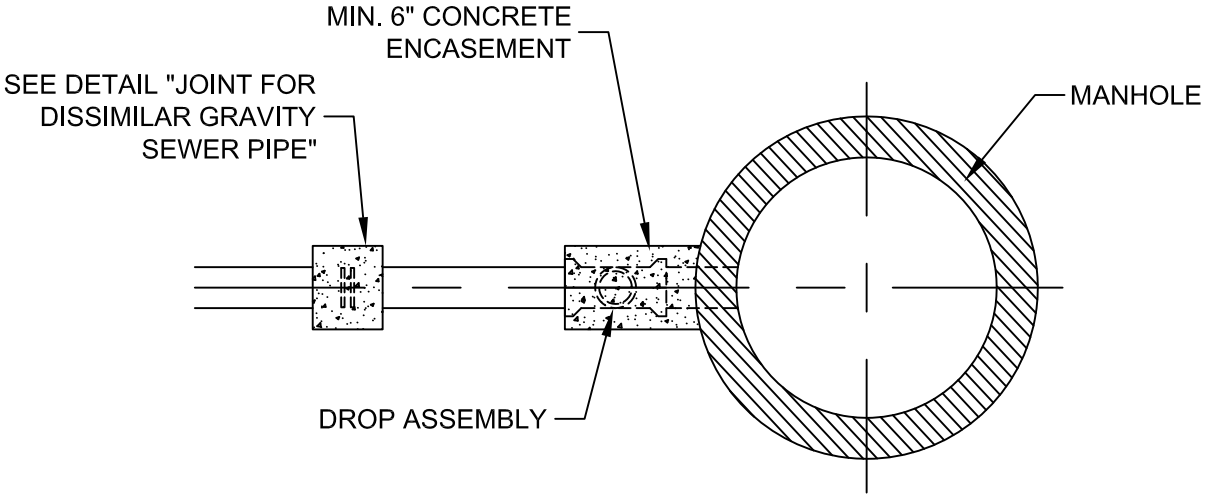

PLAN VIEW

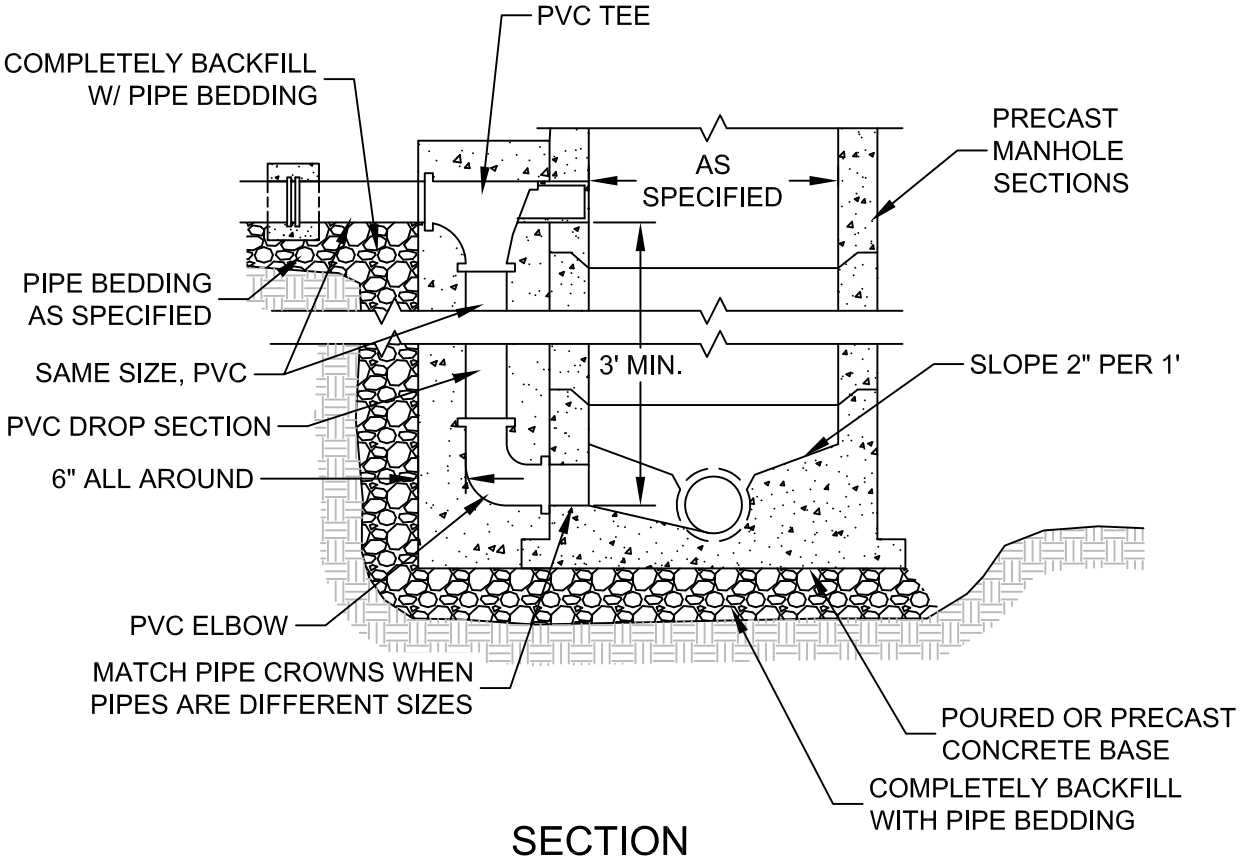

SECTION

City of Key West Engineering Services 3132 Flagler Avenue, Key West, FL 33040	TITLE DROP MANHOLE ASSEMBLY		
	DRAWN JTJ SCALE NTS	DETAIL	JUL 2015 DETAIL 8

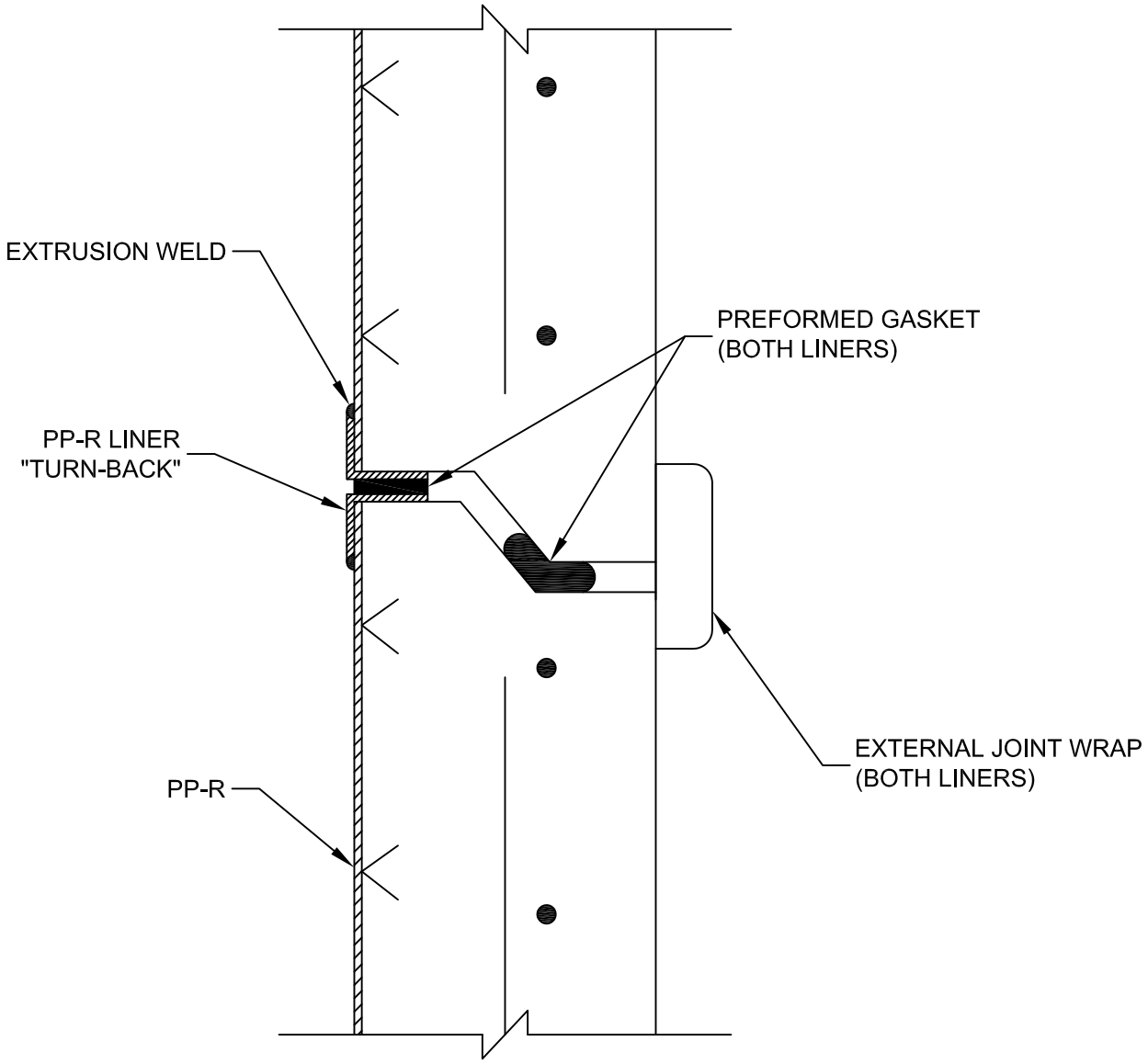

City of Key West	TITLE	JOINT DETAIL		
Engineering Services 3132 Flagler Avenue, Key West, FL 33040	DRAWN JTJ SCALE NTS	DETAIL		JUL 2015 DETAIL 9

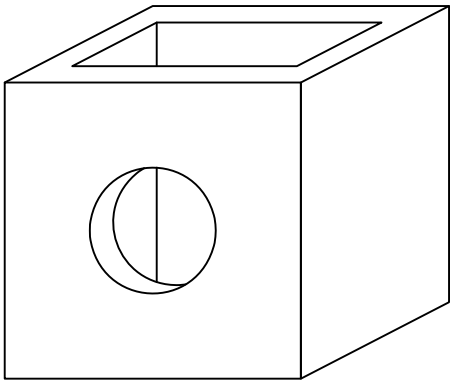

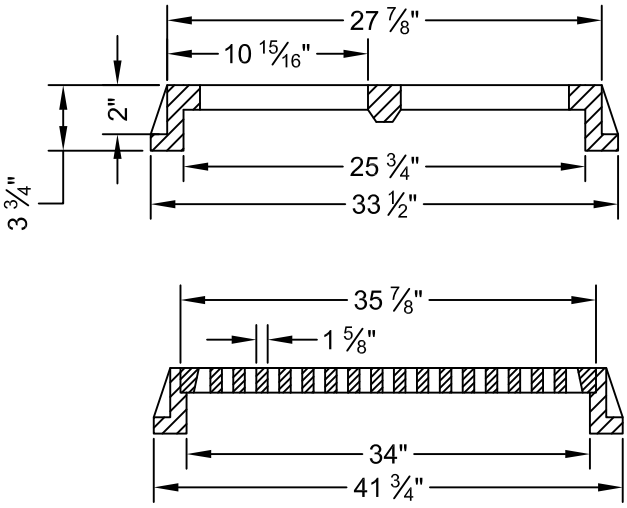

USF 4160-6210 FRAME AND GRATE

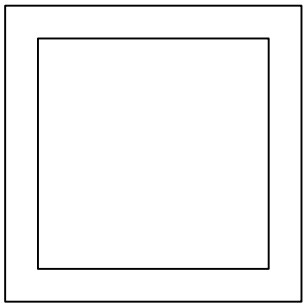

NOTE: USE U.S. FOUNDRY USF 4132 FRAME AND 6001 GRATE (OR APPROVED EQUAL) FOR ADA COMPLIANCE WHEN SPECIFIED.

FRAME AND GRATE BRICKED TO GRADE BY CONTRACTOR

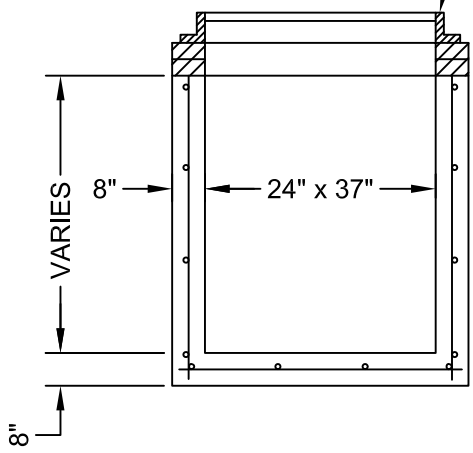

CONCRETE	= 400 PDS AT 28 DAYS = TYPE II CEMENT
WALL REINFORCING	= # 4 AT 12" C.C.E.W. GRADE 40

HOLDING CAPACITY	= 46 GAL./V.FT.
STRUCTURE WEIGHT	= BOT. SLAB = 1439 LBS.
WALL	= 1280 LBS./V.FT.
MAXIMUM PIPE SIZES	= SHORT SIDE 15" LONG SIDE 24" R.C.P.

US FOUNDRY FRAME AND GRATE
GRATE TYPE: CAST IRON
TRAFFIC RATING: HEAVY DUTY
PRODUCT NO. USF 4160-6210 OR EQUAL

TYPE CATCH BASIN
PRODUCT NO. USP 3-3.0 OR EQUAL

City of Key West Engineering Services 3132 Flagler Avenue, Key West, FL 33040	TITLE CATCH BASIN		
	DRAWN JTJ SCALE NTS	STANDARD DETAIL	JUL 2015 DETAIL 10

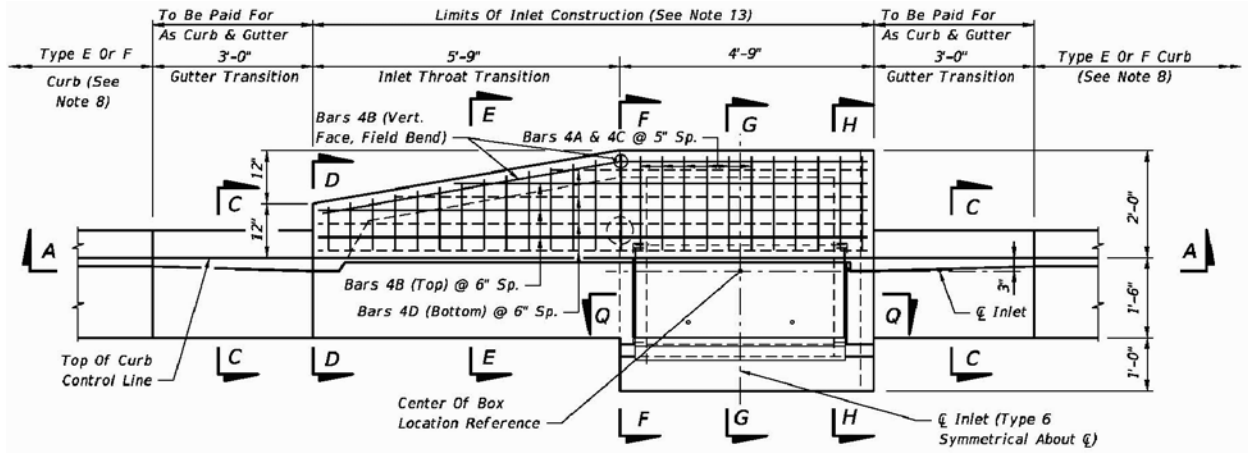

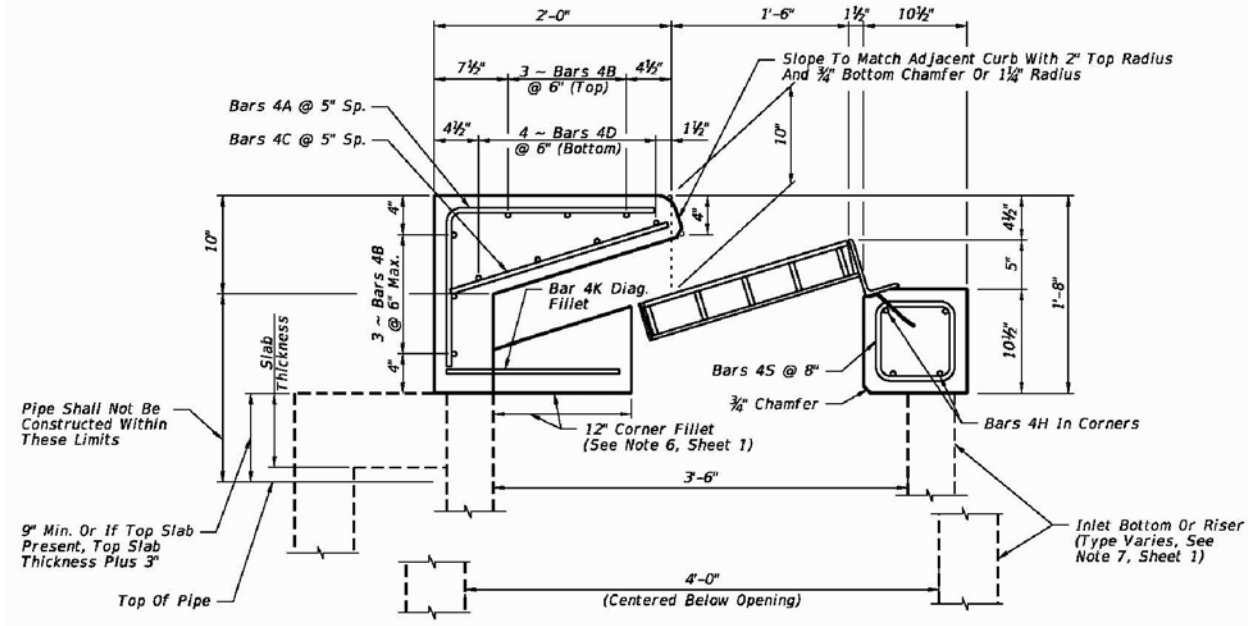

SECTION GG

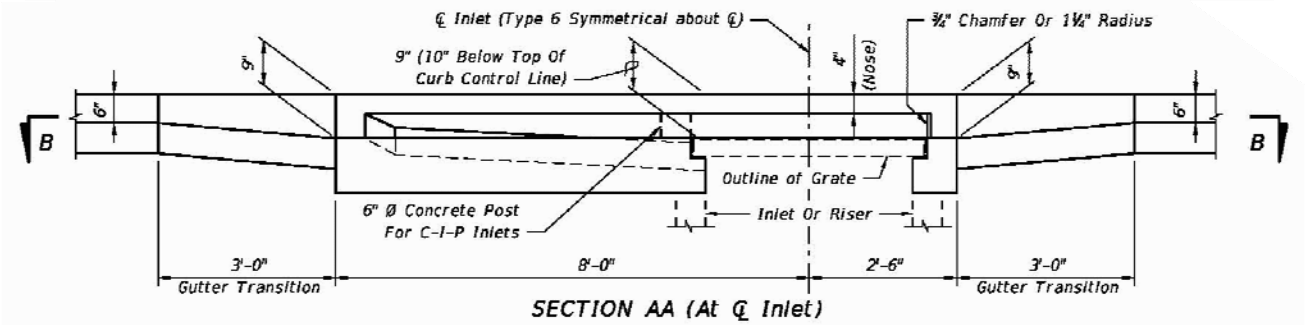

SECTION AA (At ℄ Inlet)

NOTES:

1. FINISHED GRADE AND SLOPE OF THE INLET TOPS ARE TO CONFORM WITH FINISHED CROSS SLOPE AND GRADE OF THE PROPOSED SIDEWALK AND PARKWAY.
2. FOR INLETS TO BE CONSTRUCTED ON A CURVE REFER TO PLANS, DETERMINE THE RADIUS AND WHERE NECESSARY, MODIFY THE INLET DETAILS ACCORDINGLY, BEND STEEL WHEN NECESSARY.
3. THE CORNER FILLETS FOR RECTANGULAR THROATS (TYPE 5 & 6) ARE NECESSARY ONLY WHEN THROATS ARE USED IN CONJUNCTION WITH CIRCULAR INLET 'P' & 'J' BOXES OR WHEN USED ON SKEW WITH RECTANGULAR 'P' & 'J' BOXES.
4. INLET TYPES 5 & 6 SHALL CONFORM TO ALL FDOT SPECIFICATIONS.

City of Key West	TITLE	CURB INLET - TYPES 5 AND 6		
Engineering Services 3132 Flagler Avenue, Key West, FL 33040	DRAWN JTJ SCALE NTS	DETAIL		JUL 2015 DETAIL 11

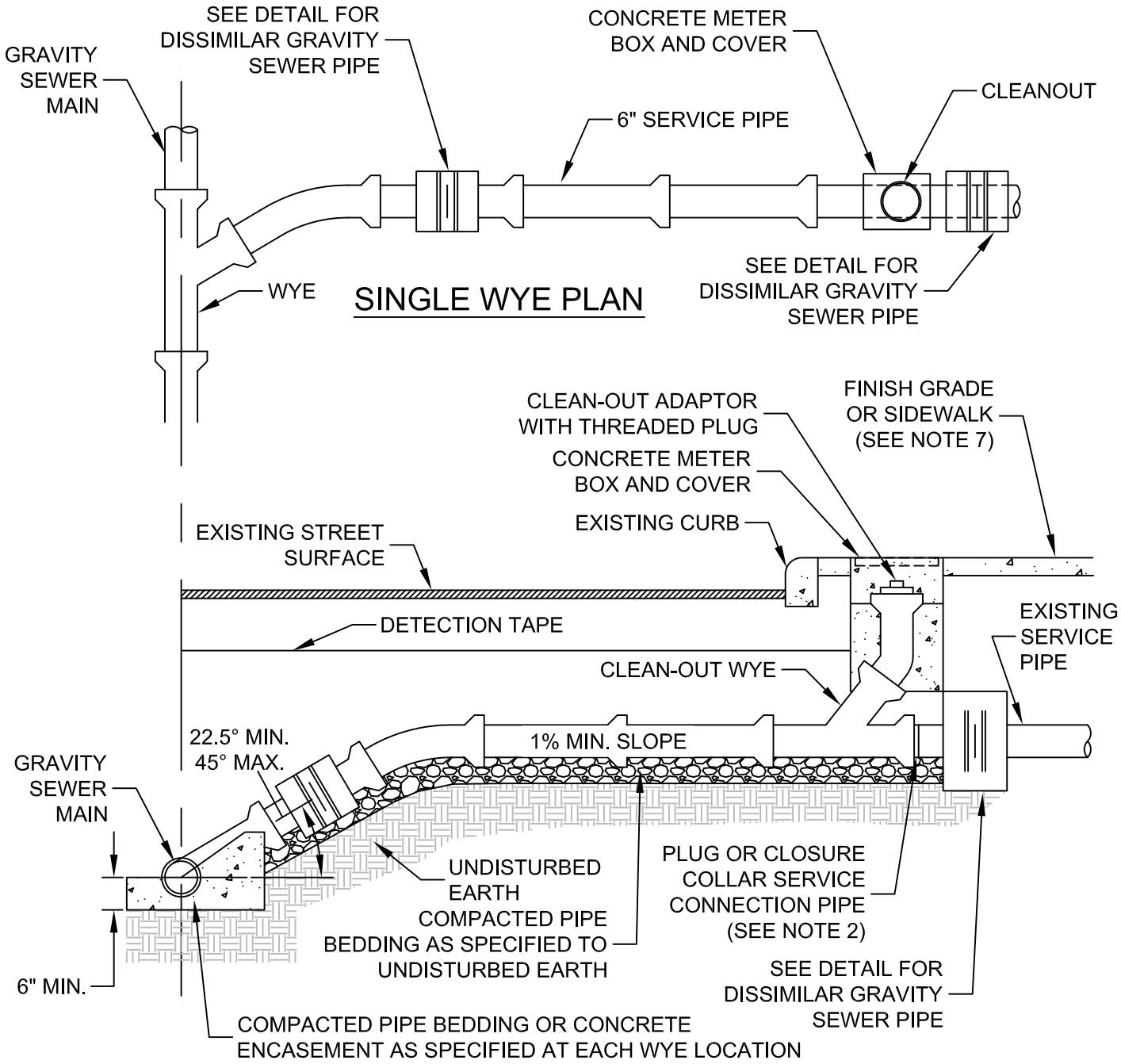

SECTION

NOTES:

1. CONTRACTOR SHALL PROVIDE AN ADEQUATE SUPPLY OF 22.5° AND 45° BENDS TO MEET VARYING FIELD CONDITIONS
2. PROVIDE APPROVED PLUG OR JOINT FOR DISSIMILAR GRAVITY SEWER PIPE FOR SERVICE CONNECTION
3. LENGTH OF SERVICE PIPE VARIES AT EACH SERVICE CONNECTION AND SHALL BE PROVIDED AS REQUIRED. TERMINATE SERVICE AT LOCATION DIRECTED BY ENGINEER
4. INSTALL MULTIPLE METER BOXES AS REQUIRED TO BRING TO GRADE
5. IF SERVICE PIPE MATERIAL IS NOT THE SAME AS SEWER MAIN, CONNECTION SHALL BE APPROVED PRIOR TO CONSTRUCTION
6. SEE SPECIFICATIONS FOR SERVICE CONNECTION MARKERS
7. SAW CUT EXISTING CONCRETE SIDE WALK FOR INSTALLATION OF SERVICE PIPE AND METER BOX. PLACE GROUT AROUND METER BOX. RESTORE SIDEWALK TO ORIGINAL CONDITION.
8. CONNECT AT TRENCH WALL OR AT ROW LINE, AS DIRECTED BY ENGINEER
9. PROVIDE WHEN CONNECTING AT TRENCH WALL

City of Key West Engineering Services 3132 Flagler Avenue, Key West, FL 33040	TITLE TYPICAL SERVICE CONNECTION		
	DRAWN JTJ SCALE NTS	DETAIL	JUL 2015 DETAIL 12

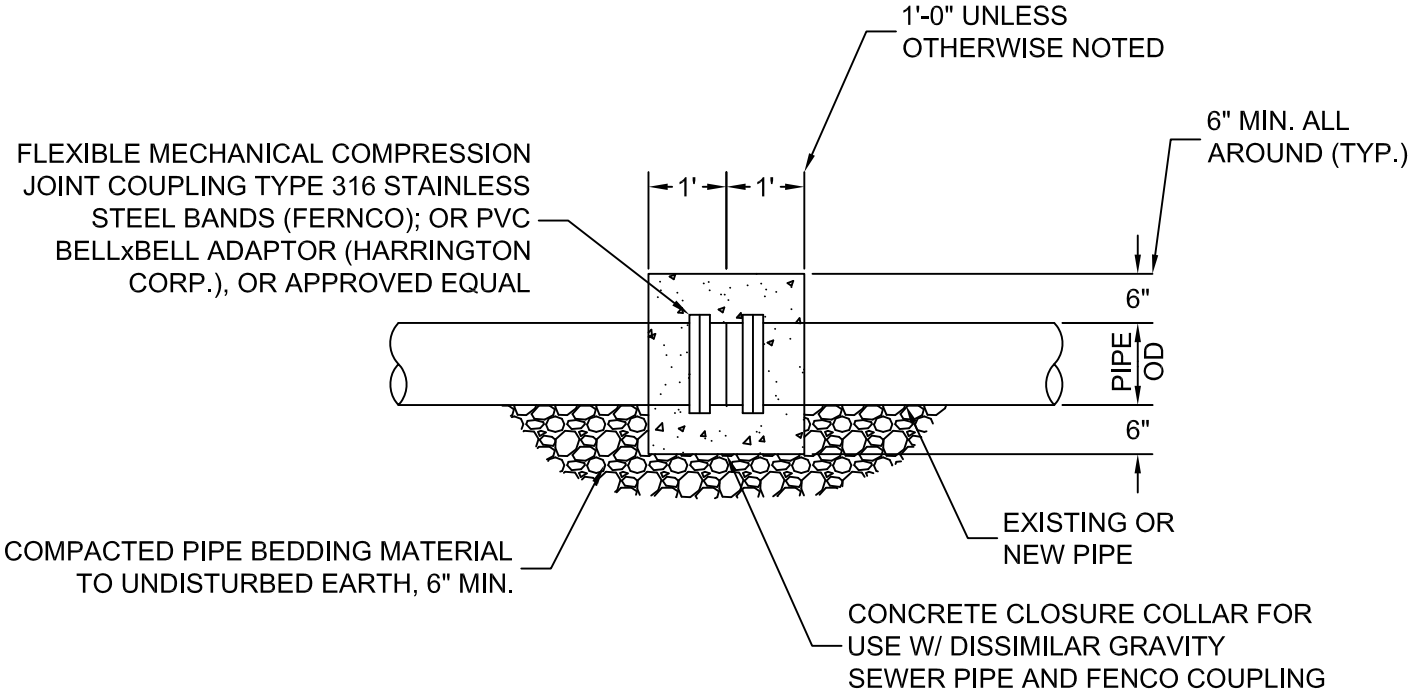

JOINT FOR DISSIMILAR GRAVITY SEWER PIPE

NOTE:
JOINT SHALL BE THE SECOND JOINT AWAY FROM MANHOLE.

City of Key West	TITLE JOINT FOR DISSIMILAR GRAVITY SEWER PIPE			
Engineering Services 3132 Flagler Avenue, Key West, FL 33040	DRAWN JTJ SCALE NTS	SECTION		JUL 2015 DETAIL 13

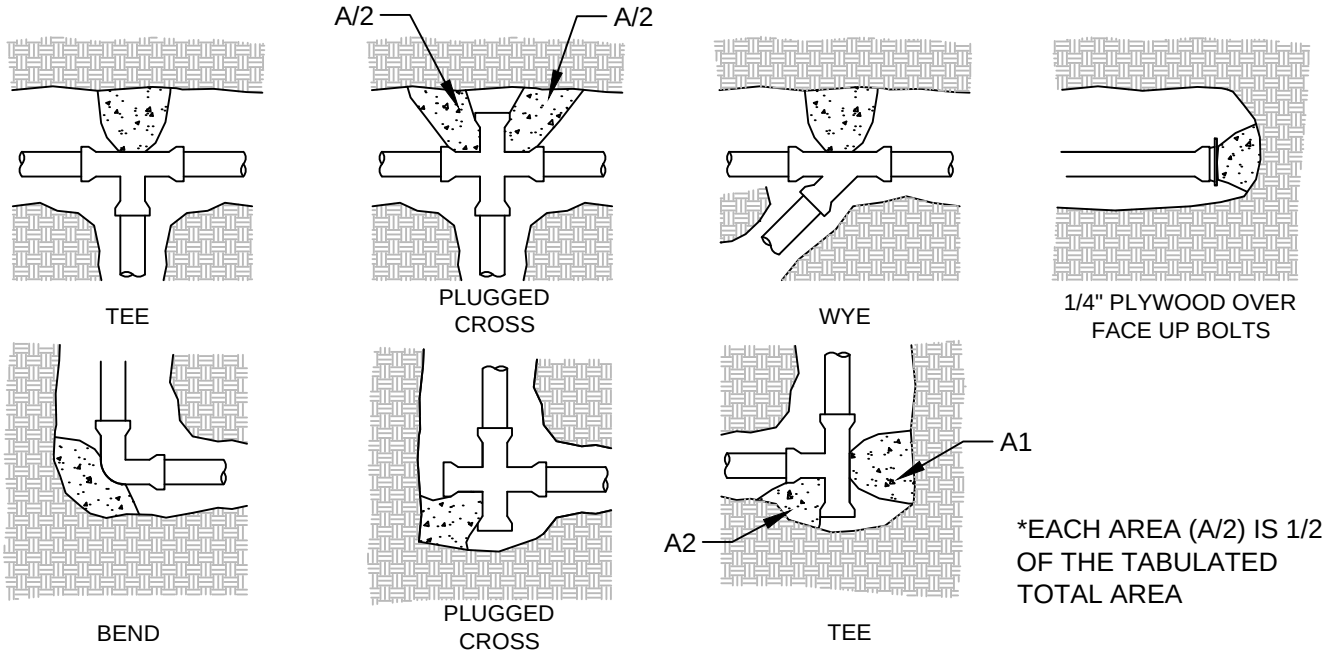

*EACH AREA (A/2) IS 1/2 OF THE TABULATED TOTAL AREA

PLAN (NTS)

VOLUME OF THRUST BLOCK IN CUBIC YARDS (VERTICAL BENDS)			
FITTING SIZE	BEND ANGLE		
	45°	22.5°	11.25°
4	1.1	0.4	0.2
6	2.7	1.0	0.4
8	4.0	1.5	0.6
10	6.0	2.3	0.9
12	8.5	3.2	1.3
14	11.5	4.3	1.8
16	14.8	5.6	2.3

FITTING SIZE	ROD SIZE	EMBEDMENT
12" AND LESS	# 6	30"
14" - 16"	# 4	36"

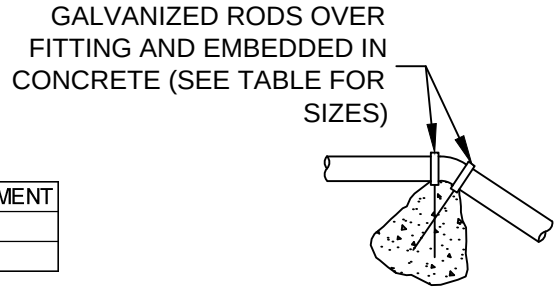

PROFILE (NTS)

BEARING AREA OF THRUST BLOCKS IN SQ. FT. (HORIZONTAL BENDS)							
FITTING SIZE	TEE. WYE PLUG OR CAP	90 BEND PLUGGED CROSS	TEE PLUGGED ON RUN		BEND ANGLE		
			A1	A2	45°	22.5°	11.25°
4	1.0	1.4	1.9	1.4	1.0	-	-
6	2.1	3.0	4.3	3.0	1.6	1.0	-
8	3.8	5.3	7.6	5.4	2.9	1.5	1.0
10	5.9	8.4	11.8	8.4	4.6	2.4	1.2
12	8.5	12.0	17.0	12.0	6.6	3.4	1.7
14	11.5	16.3	23.0	15.3	8.9	4.6	2.3
16	15.0	21.3	30.0	21.3	11.6	6.0	3.0
18	19.0	27.0	38.0	27.0	14.6	7.6	3.8
20	23.5	33.3	47.0	33.3	18.1	9.4	4.7
24	34.0	48.0	68.0	48.0	26.2	13.6	6.6

NOTE:
WHERE FEASIBLE, ALL THRUST BLOCKS SHALL BE REPLACED WITH MECHANICAL JOINT RESTRAINED FITTINGS

City of Key West	TITLE	THRUST BLOCKS	
Engineering Services 3132 Flagler Avenue, Key West, FL 33040	DRAWN JTJ SCALE NTS	DETAIL	JUL 2015 DETAIL 14-A

THRUST BLOCK NOTES

1. KEEP CONCRETE CLEAR OF JOINT AND JOINT ACCESSORIES.

2. CONCRETE THRUST BLOCKING SHALL BE POURED AGAINST UNDISTURBED EARTH.

3. REQUIRED VOLUMES OR BEARING AREAS AT FITTINGS SHALL BE AS INDICATED ON THE THRUST BLOCK DETAIL, ADJUSTED, IF NECESSARY, TO CONFORM TO THE TEST PRESSURE(S) AND ALLOWABLE SOIL BEARING STRESS(ES) STATED IN THE SPECIFICATIONS.

4. THRUST BLOCK VOLUMES FOR VERTICAL BENDS HAVING UPWARD RESULTANT THRUSTS ARE BASED ON TEST PRESSURE OF 150 PSIG AND THE WEIGHT OF CONCRETE = 4050 LBS/CY. TO COMPUTE VOLUMES FOR DIFFERENT TEST PRESSURES, USE THE FOLLOWING EQUATION: VOLUME = (TEST PRESSURE/150) x (TABLE VALUE).

5. BEARING AREAS FOR HORIZONTAL BEND THRUST BLOCKS ARE BASED ON TEST PRESSURE OF 150 PSIG AND AN ALLOWABLE SOIL BEARING STRESS OF 2000 LBS/SF. TO COMPUTE BEARING AREAS FOR DIFFERENT TEST PRESSURES AND SOIL BEARING STRESSES, USE THE FOLLOWING EQUATION: BEARING AREA = (TEST PRESSURE/150) x (2000/SOIL BEARING STRESS) x (TABLE VALUE).

6. THRUST BLOCKS FOR VERTICAL BENDS HAVING DOWNWARD RESULTANT THRUSTS SHALL BE THE SAME AS FOR HORIZONTAL BENDS.

7. BEARING AREAS, VOLUMES, AND SPECIAL BLOCKING DETAILS SHOWN ON PLANS TAKE PRECEDENCE OVER THIS STANDARD.

8. BEARING AREAS OF THRUST BLOCKS SHALL NOT BE LESS THAN 1.0 SF.

9. VERTICAL BENDS THAT REQUIRE A THRUST BLOCK VOLUME EXCEEDING 5 CUBIC YARDS REQUIRE SPECIAL BLOCKING DETAILS. SEE PLANS.

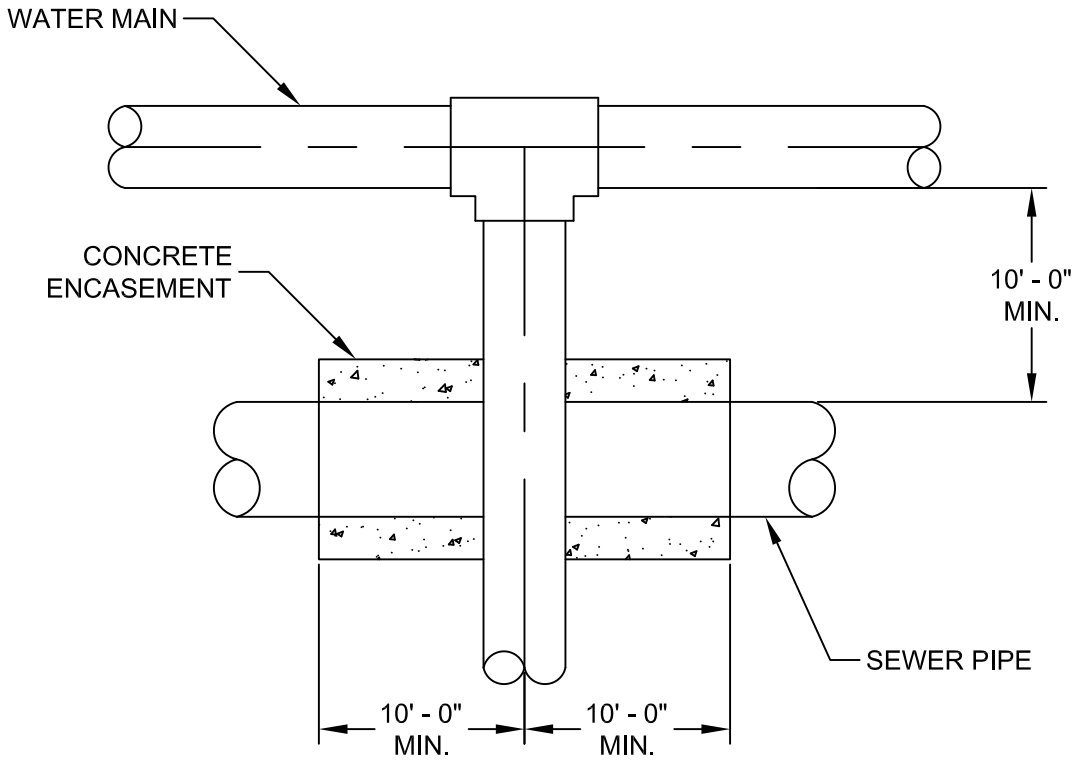

PLAN

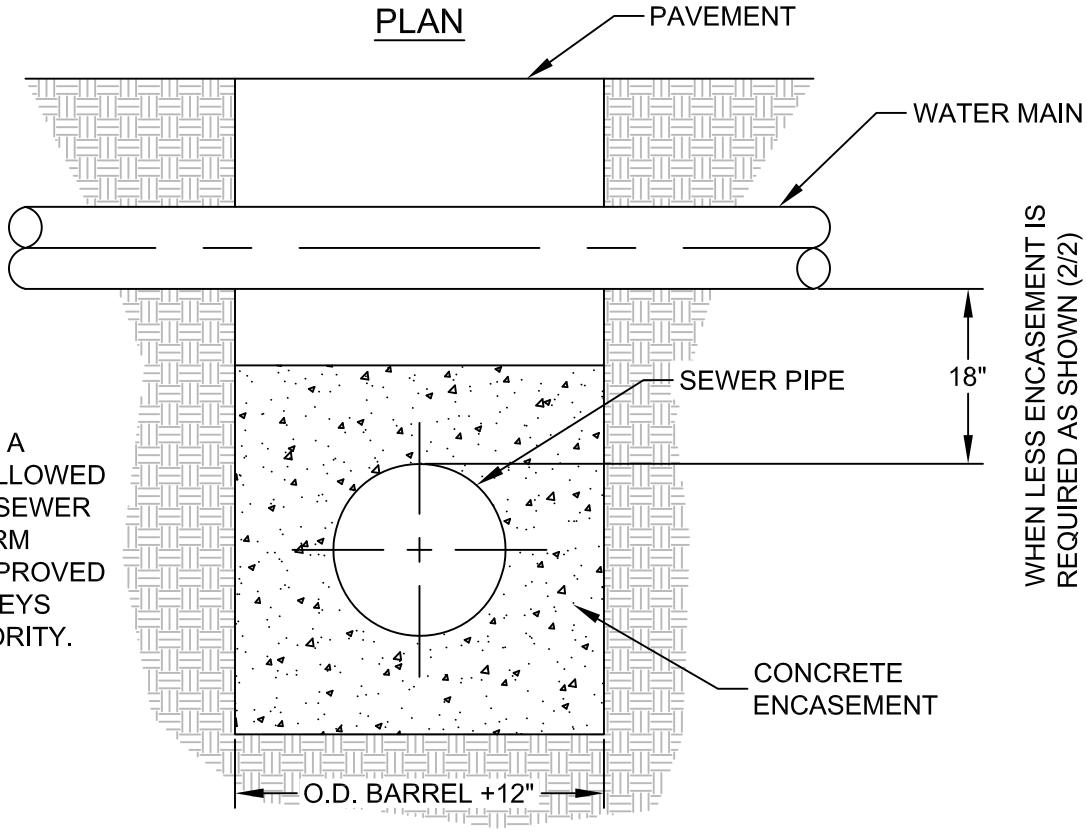

NOTE:
AT NO TIME SHALL A WATER MAIN BE ALLOWED UNDER A SEWER, SEWER LATERAL, OR STORM DRAIN UNLESS APPROVED BY THE FLORIDA KEYS AQUEDUCT AUTHORITY.

SECTION

City of Key West Engineering Services 3132 Flagler Avenue, Key West, FL 33040	TITLE ENCASEMENTS		
	DRAWN JTJ SCALE NTS	DETAIL	JUL 2015 DETAIL 15

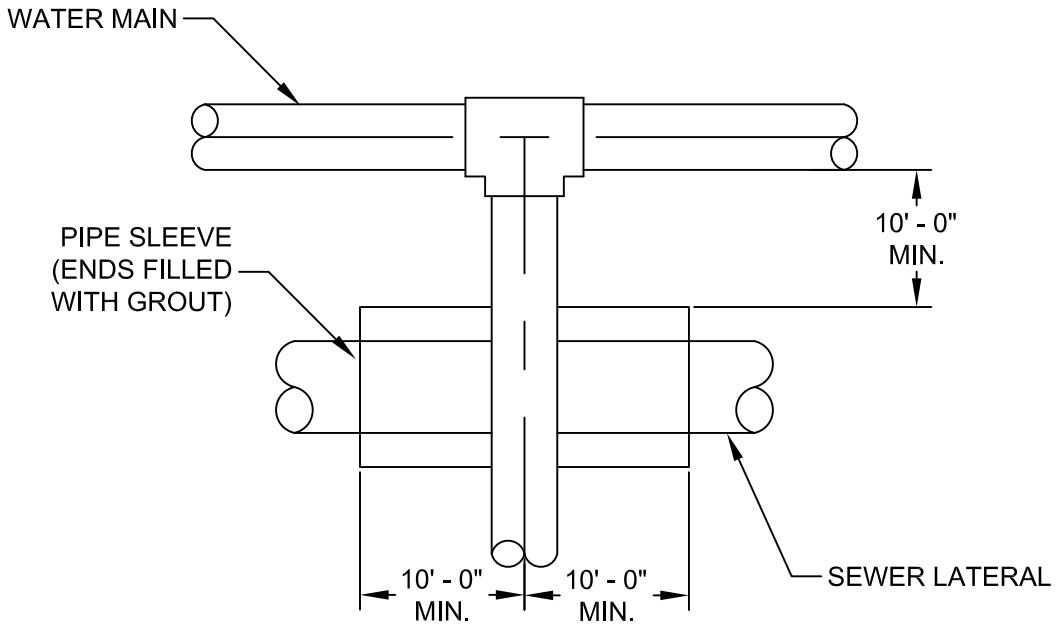

PLAN

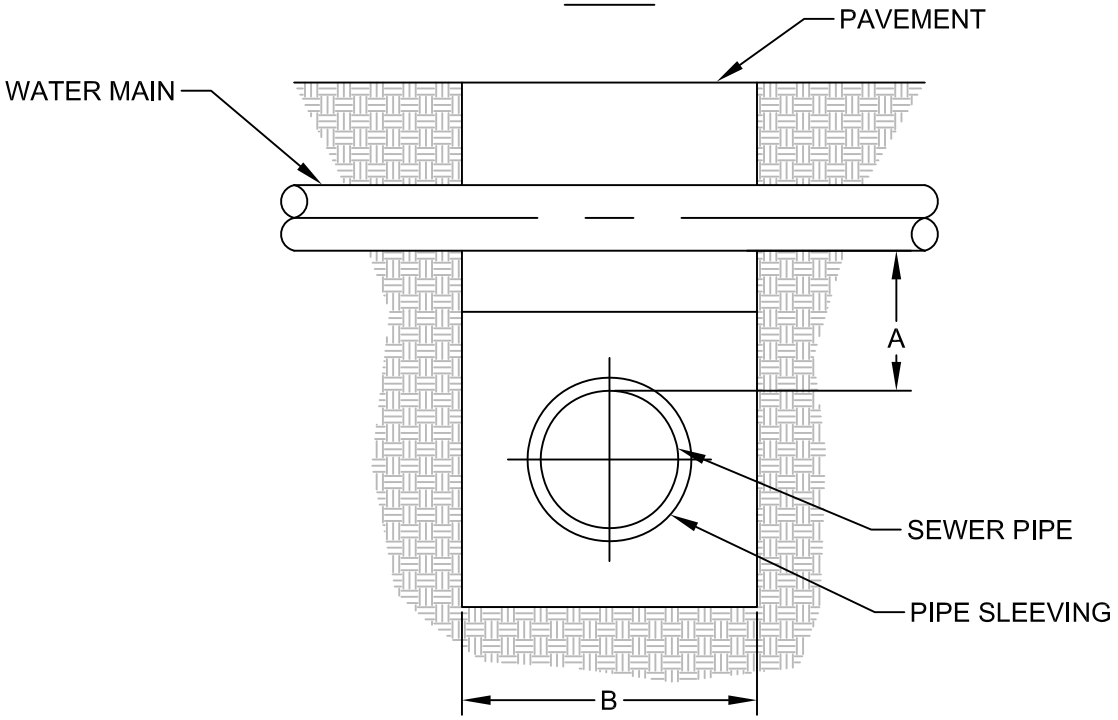

SECTION

NOTE:

1. AT NO TIME SHALL A WATER MAIN BE ALLOWED UNDER A SEWER, SEWER LATERAL, OR STORM DRAIN UNLESS APPROVED BY THE FLORIDA KEYS AQUEDUCT AUTHORITY.
2. "A" - WHEN LESS THAN 18" , SLEEVING IS REQUIRED AS SHOWN
3. "B" - PIPE OUTSIDE BARREL DIAMETER +12"
4. PIPE SLEEVE SHALL BE 2" GREATER IN NOMINAL PIPE DIAMETER THAN SEWER SERVICE LATERAL.

SEAL OF THE CITY OF KEY WEST, FLORIDA	City of Key West	TITLE ENCASEMENT - ALTERNATE FOR		
	Engineering Services 3132 Flagler Avenue, Key West, FL 33040	DRAWN JTJ SCALE NTS	SEWER LATERALS	JUL 2015 DETAIL 16

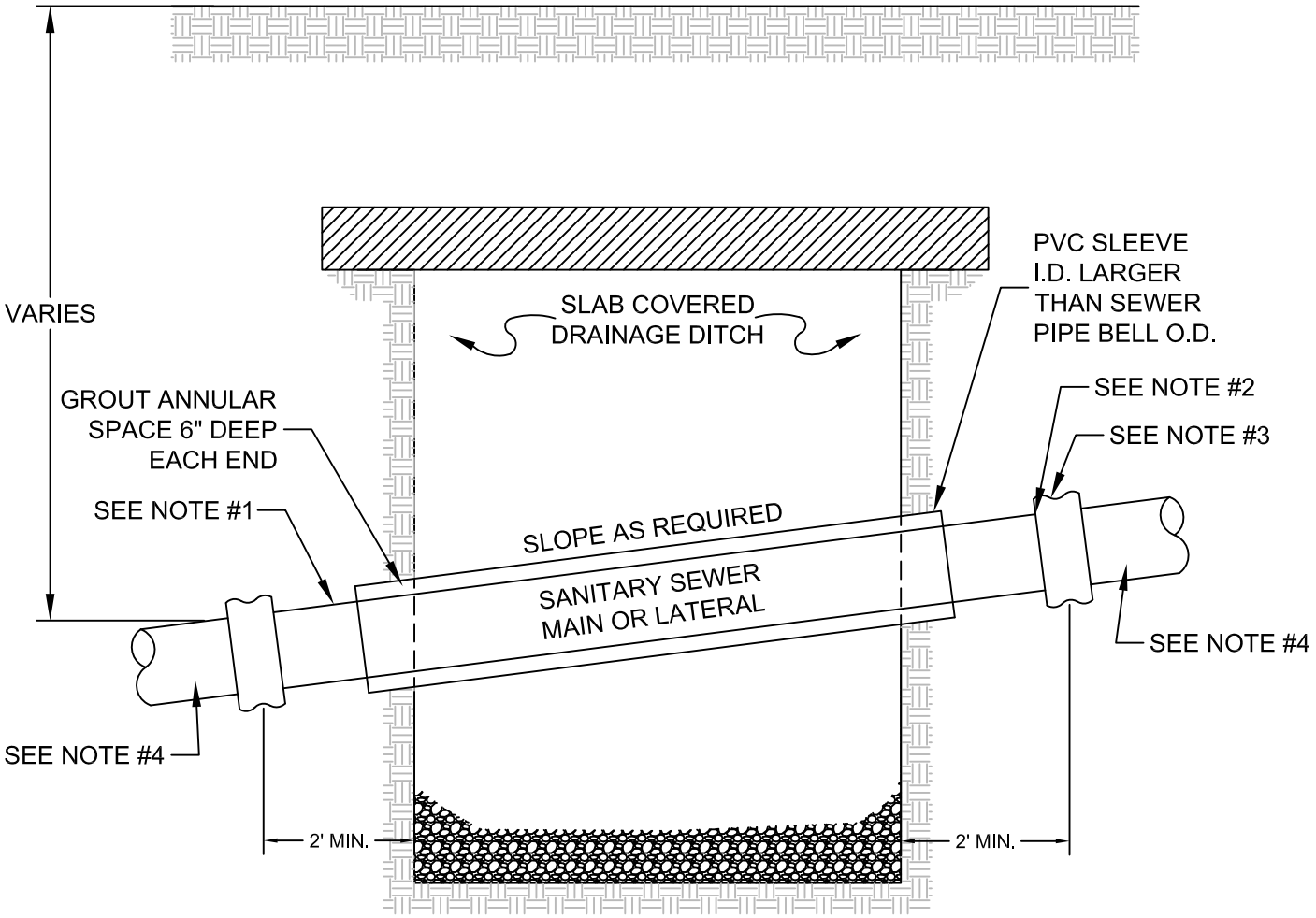

NOTES:

1. SANITARY SEWER MAIN OR LATERAL SHALL BE A CONTINUOUS LENGTH OF DUCTILE IRON PIPE TO EXTEND 2' MIN., WITHER SIDE OF THE DRAINAGE DITCH WITH NO FITTINGS OR JOINTS WITHIN THE DITCH. PVC PIPE MAY BE USED IF AN APPROPRIATE LENGTH OF D.I.P.* IS USED AS A CASING FOR THE PVC SEWER PIPE IN LIEU OF THE ABOVE. SEAL ENDS WITH GROUT.

2. APPROVED GASKET

3. DOUBLE HUB (D.I.P. TO VC) - ADJUST STAINLESS STEEL REPAIR COUPLING OR PVC DOUBLE BELL TRANSITION COUPLING.

4. EXISTING SEWER PIPE (VITRIFIED CLAY OR PVC)

6. SOIL CONDITIONS MAY REQUIRE HEADWALL

* D.I.P. SHALL BE ONE SIZE RANGE LARGER THAN THE PVC PIPE UNLESS OTHERWISE APPROVED

City of Key West Engineering Services 3132 Flagler Avenue, Key West, FL 33040	TITLE SLEEVE FOR STORM SEWER CONFLICTS			
	DRAWN JTJ SCALE NTS	DETAIL	JUL 2015 DETAIL 17	

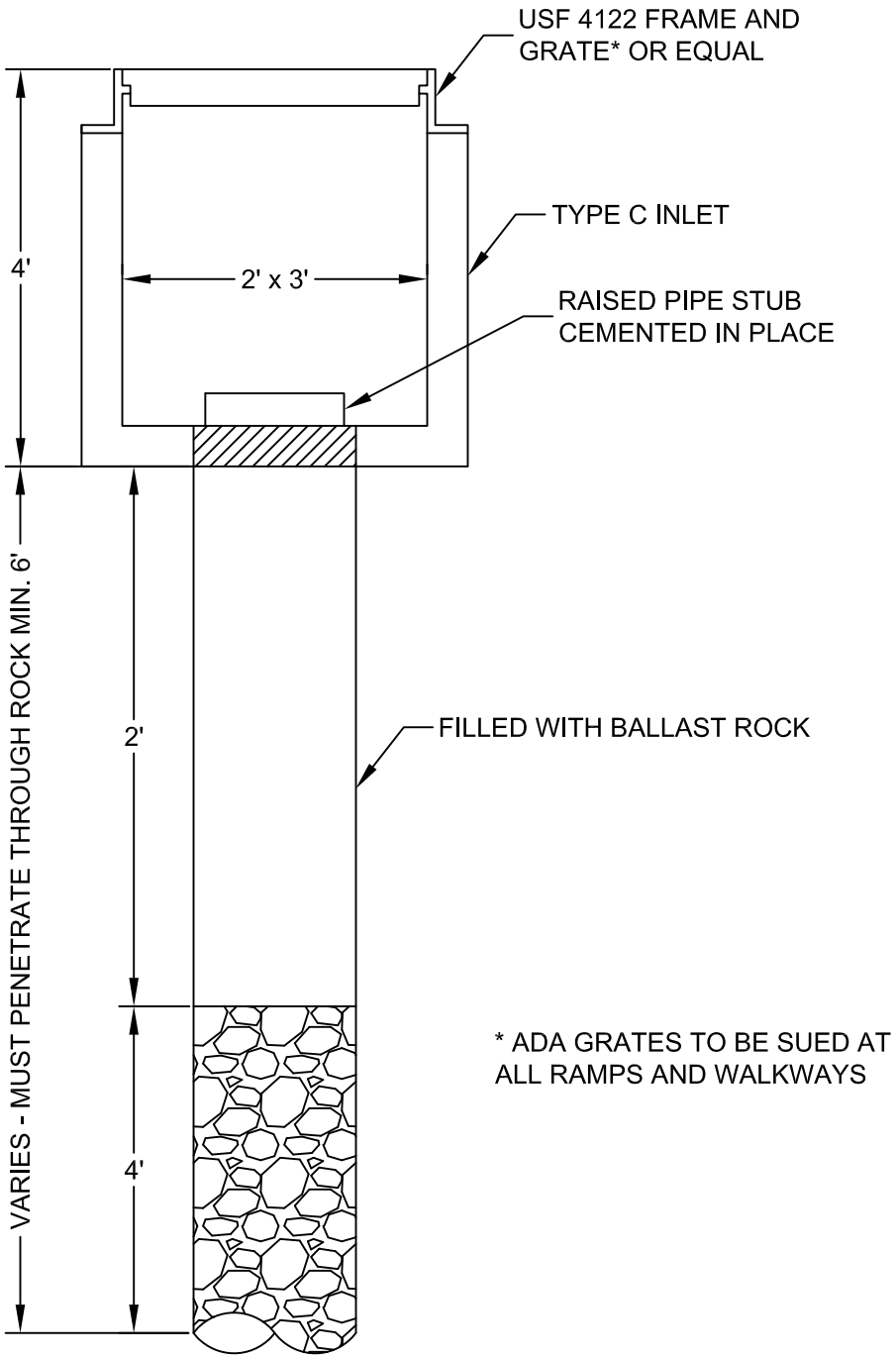

* ADA GRATES TO BE SUED AT
ALL RAMPS AND WALKWAYS

City of Key West Engineering Services 3132 Flagler Avenue, Key West, FL 33040	TITLE	FRENCH DRAIN		
	DRAWN JTJ SCALE NTS	DETAIL		JUL 2015 DETAIL 18

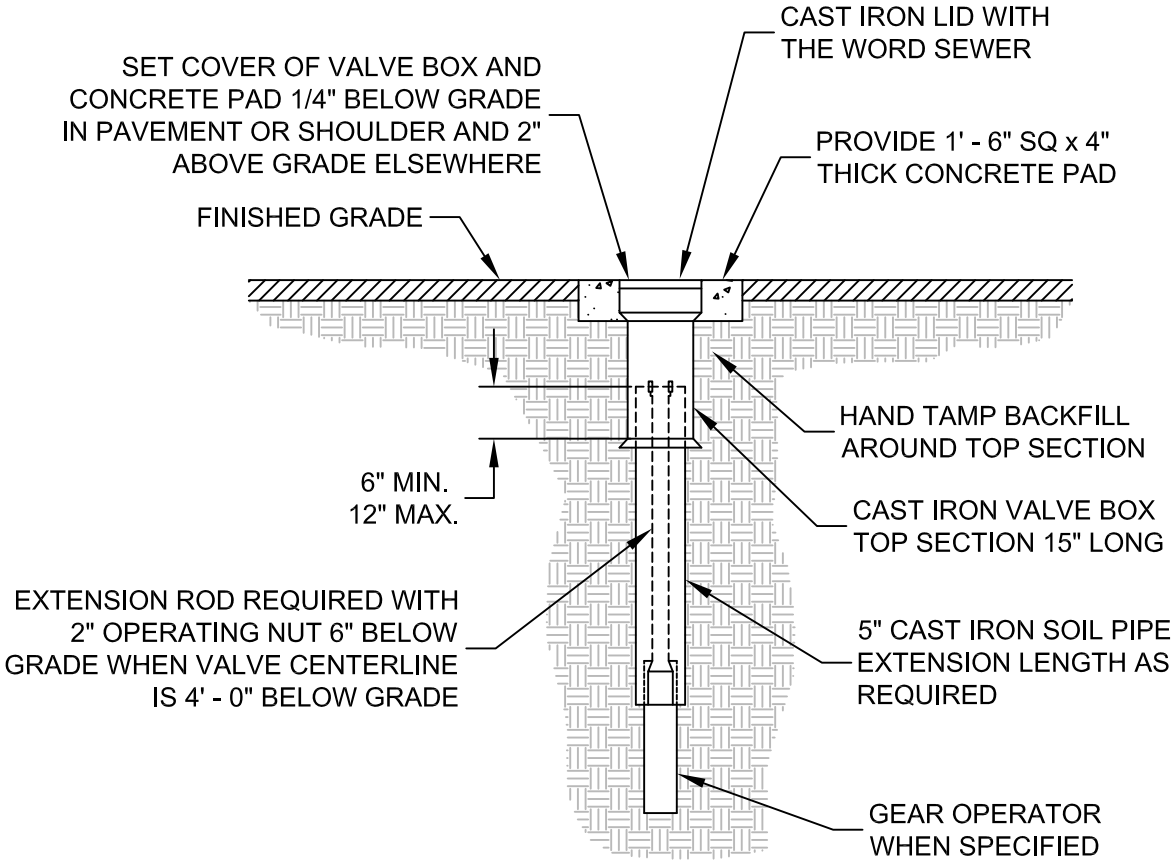

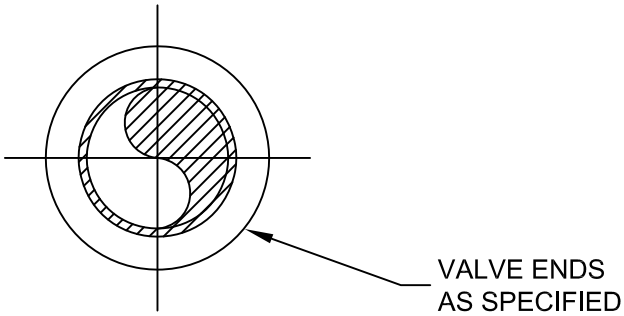

City of Key West Engineering Services 3132 Flagler Avenue, Key West, FL 33040	TITLE BURIED PLUG VALVE SETTING		
	DRAWN JTJ SCALE NTS	DETAIL	JUL 2015 DETAIL 19

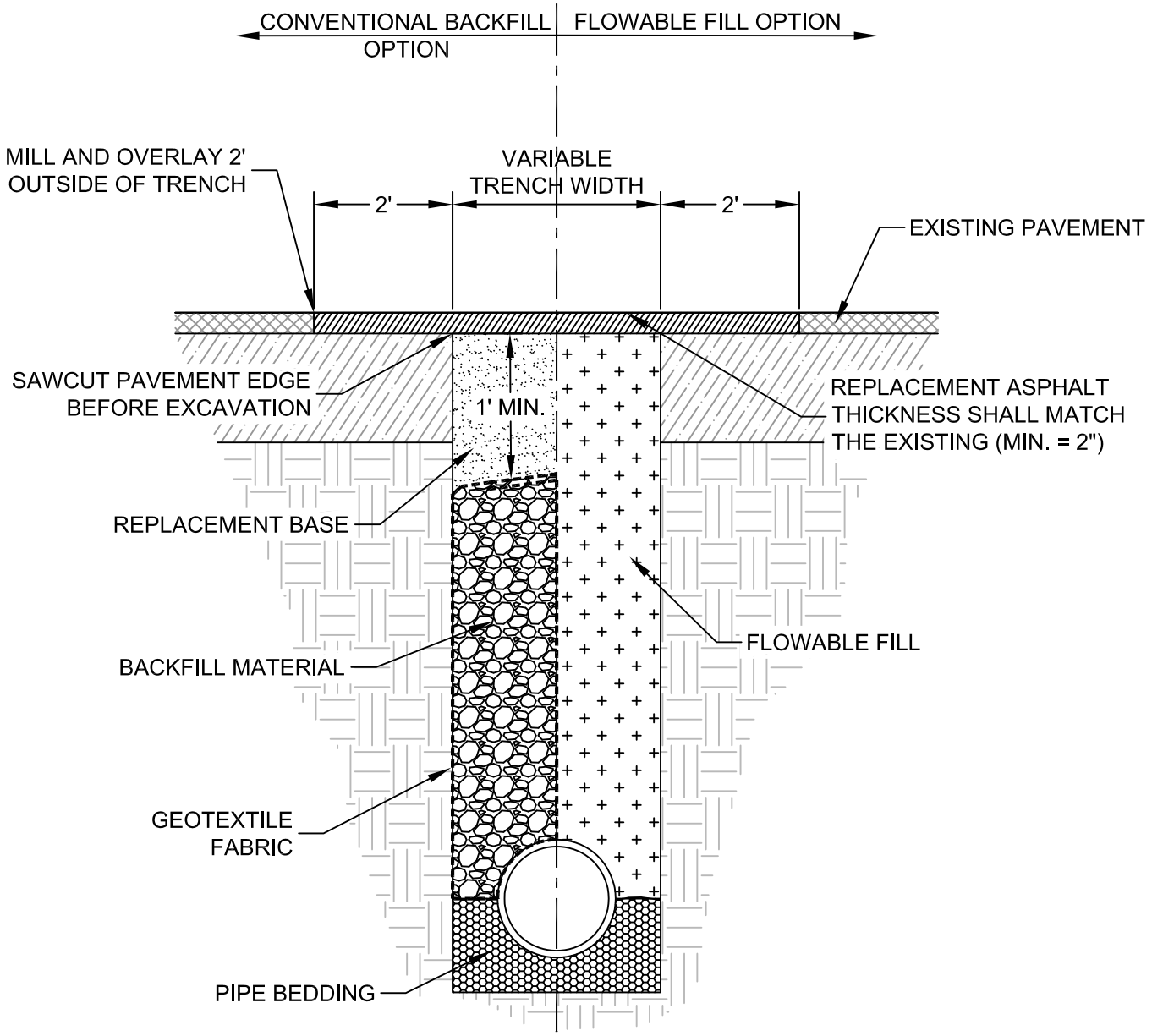

ASPHALT UTILITY TRENCH

1. BACKFILL MATERIAL SHALL CONSIST OF #57 STONE, FLOWABLE FILL, OR OTHER SELECT BACKFILL MATERIAL APPROVED BY THE CITY. IF FLOWABLE FILL IS USED IT SHALL HAVE A MINIMUM RATING OF 500 PSI.
2. BACKFILL MATERIAL SHALL BE COMPACTED TO 95% STANDARD PROCTOR AND SHALL GENERALLY BE COMPACTED IN 6" LIFTS WITH A VIBRATORY COMPACTOR.
3. THE REPLACEMENT BASE SHALL CONSIST OF COMPACTED LIMEROCK AND SHALL HAVE A MINIMUM DEPTH OF 12".
4. ADJUST ALL EXISTING METER BOXES AND MANHOLE RINGS IMPACTED BY CONSTRUCTION.
5. THE REPLACEMENT ASPHALT SHALL MATCH THE EXISTING STRUCTURAL AND FRICTION COURSES FOR TYPE AND THICKNESS.

City of Key West	TITLE	ASPHALT UTILITY TRENCH		
Engineering Services 3132 Flagler Avenue, Key West, FL 33040	DRAWN JTJ SCALE NTS	SECTION		JUL 2015 DETAIL 20

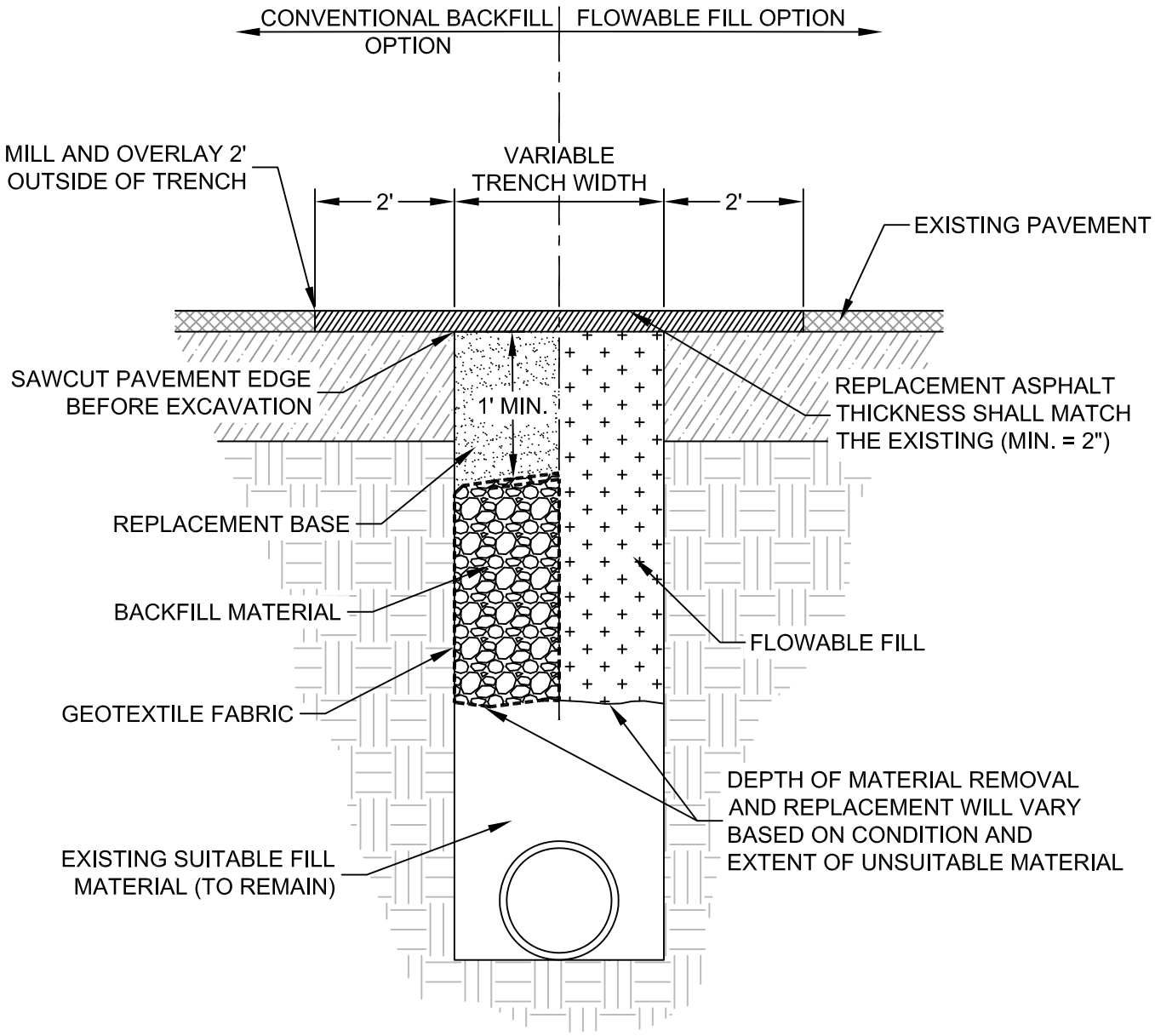

REPAIRS FOR ASPHALT TRENCH

1. REMOVE UNSUITABLE BACKFILL MATERIAL ABOVE THE TOP OF PIPE. REPLACE WITH #57 STONE, FLOWABLE FILL OR OTHER SELECT BACKFILL MATERIAL APPROVED BY THE CITY. IF FLOWABLE FILL IS USED IT SHALL HAVE A MINIMUM RATING OF 500 PSI.
2. BACKFILL MATERIAL SHALL BE COMPACTED TO 95% STANDARD PROCTOR AND SHALL GENERALLY BE COMPACTED IN 6" LIFTS WITH A VIBRATORY COMPACTOR.
3. THE REPLACEMENT BASE SHALL CONSIST OF COMPACTED LIMEROCK AND SHALL HAVE A MINIMUM DEPTH OF 12".
4. ADJUST ALL EXISTING METER BOXES AND MANHOLE RINGS IMPACTED BY CONSTRUCTION.
5. THE REPLACEMENT ASPHALT SHALL MATCH THE EXISTING STRUCTURAL AND FRICTION COURSES FOR TYPE AND THICKNESS.

City of Key West	TITLE: REPAIRS FOR ASPHALT TRENCH			
Engineering Services 3132 Flagler Avenue, Key West, FL 33040	DRAWN: JTJ SCALE: NTS	SECTION		JUL 2015 DETAIL: 21

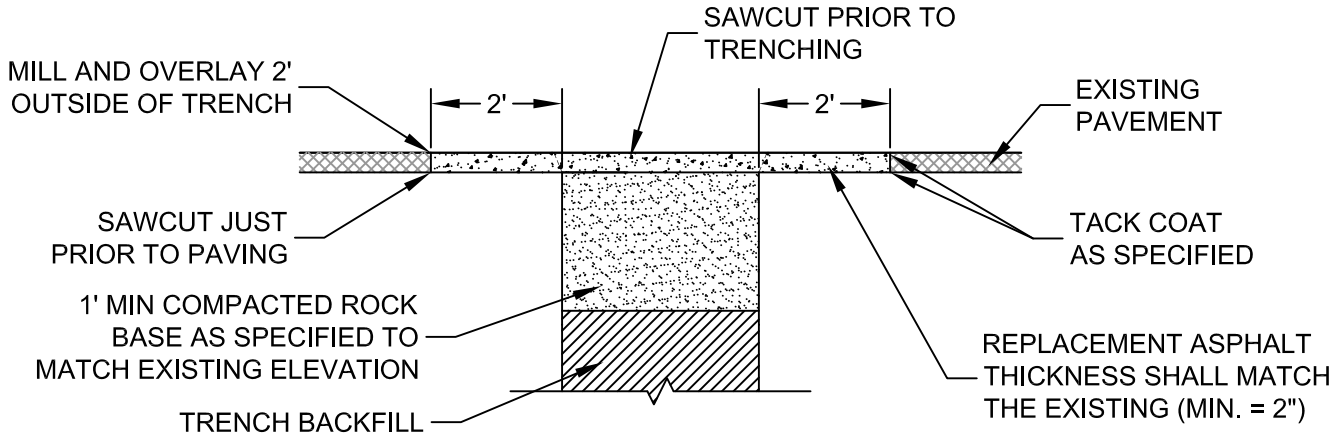

ASPHALT SURFACE RESTORATION TRENCH

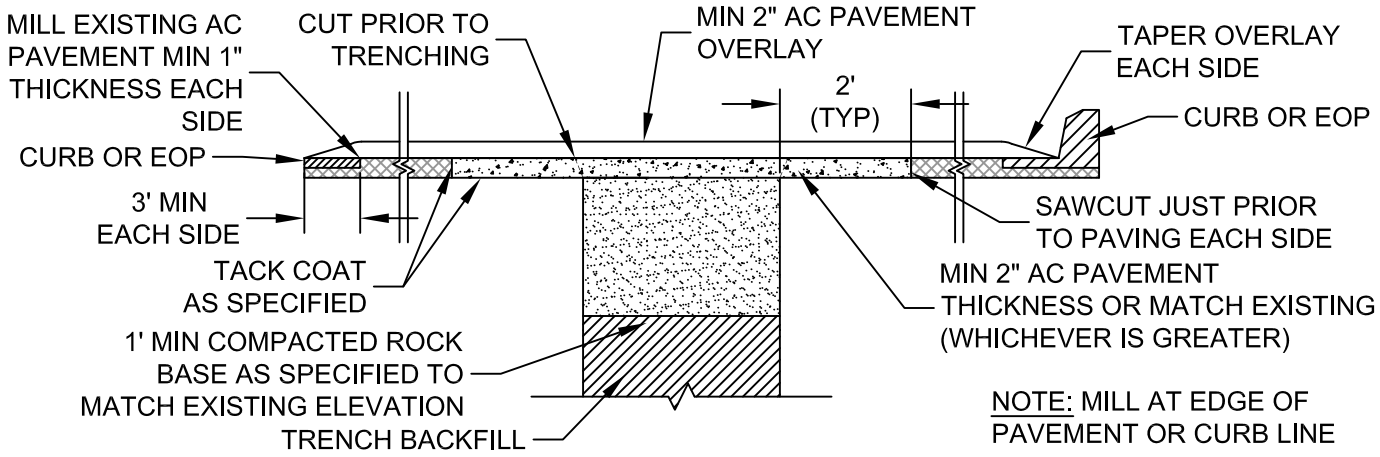

ASPHALT SURFACE RESTORATION TRENCH - FULL WIDTH OVERLAY

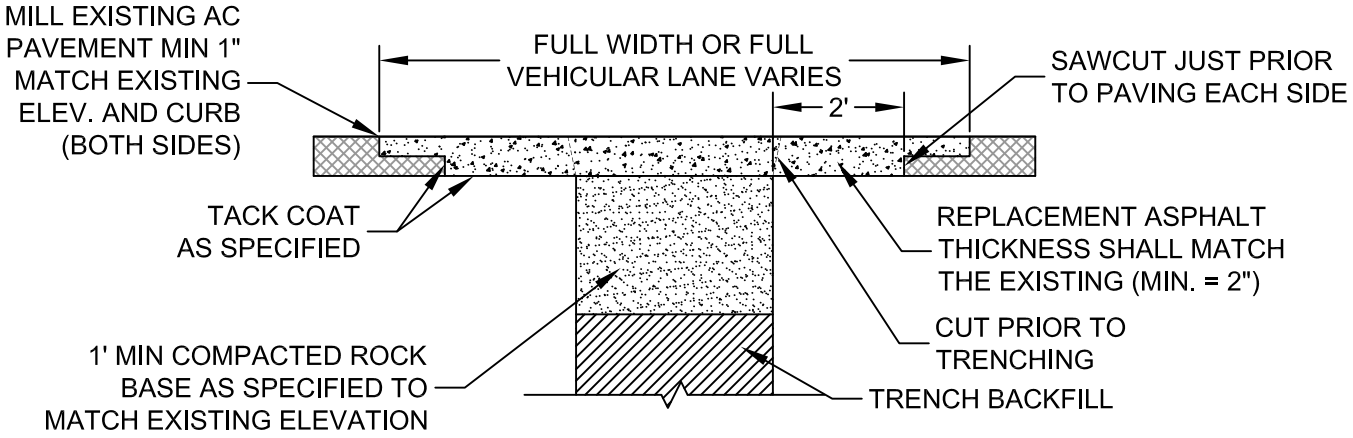

ASPHALT SURFACE RESTORATION TRENCH - FULL LANE AND FULL WIDTH RESTORATIONS

City of Key West Engineering Services 3132 Flagler Avenue, Key West, FL 33040	TITLE ASPHALT SURFACE		
	DRAWN JTJ SCALE NTS	RESTORATION TRENCH	JUL 2015 DETAIL 22

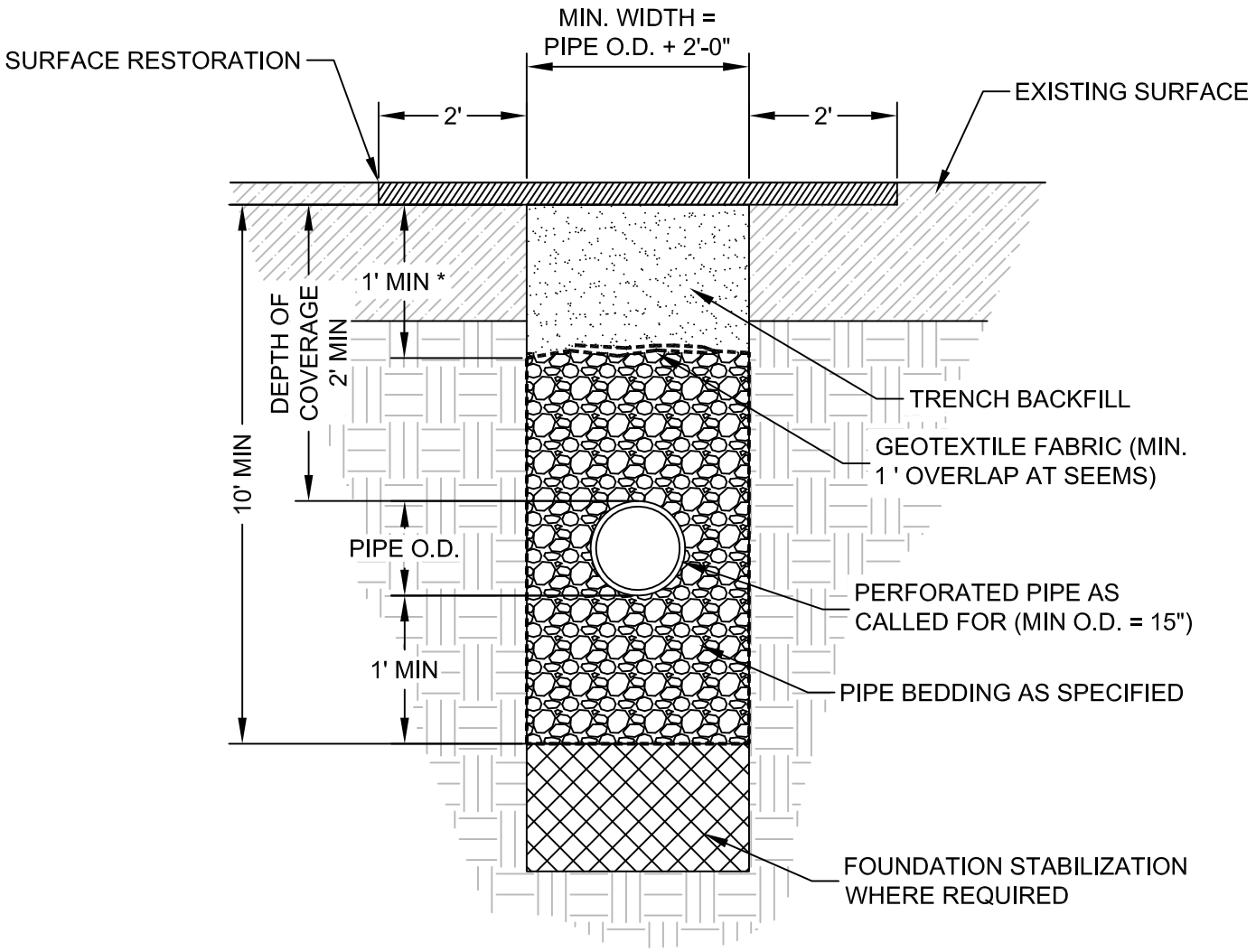

* OR TO WATER ELEVATION, WHICHEVER IS HIGHER

EXFILTRATION TRENCH

1. THE BOTTOM OF THE EXFILTRATION TRENCH SHALL BE 10'-0" BELOW EXISTING GROUND ELEVATION, UNLESS FIELD CONDITIONS WARRANT OTHERWISE.
2. AFTER THE FOUNDATION STABILIZATION HAS BEEN PLACED TO THE SPECIFIED ELEVATION, IT SHALL BE CAREFULLY WASHED DOWN WITH CLEAN WATER IN ORDER TO ALLOW FOR ANY INITIAL SETTLEMENT THAT MAY OCCUR. IF SETTLEMENT DOES TAKE PLACE, ADDITIONAL FOUNDATION ROCK WILL BE ADDED TO RESTORE THE FOUNDATION TO THE PROPER ELEVATION.

City of Key West	TITLE	EXFILTRATION TRENCH		
Engineering Services 3132 Flagler Avenue, Key West, FL 33040	DRAWN JTJ SCALE NTS	SECTION		JUL 2015 DETAIL 23

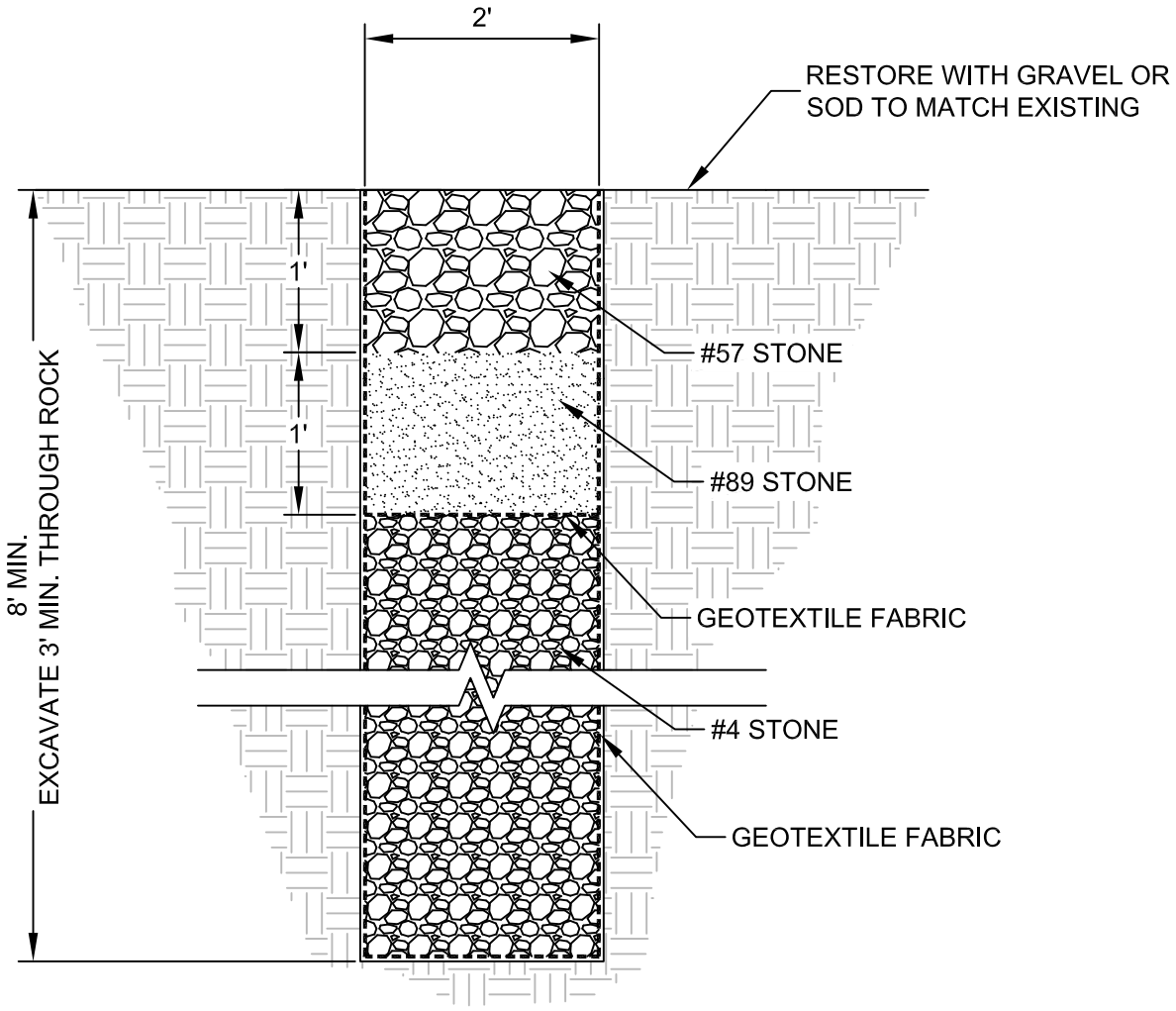

SEEPAGE TRENCH

NOTE:
COMPACTION SHALL OCCUR IN 8" LIFTS THROUGH THE USE OF A VIBRATORY COMPACTOR.

City of Key West	TITLE	SEEPAGE TRENCH		
Engineering Services 3132 Flagler Avenue, Key West, FL 33040	DRAWN JTJ SCALE NTS	SECTION		JUL 2015 DETAIL 24

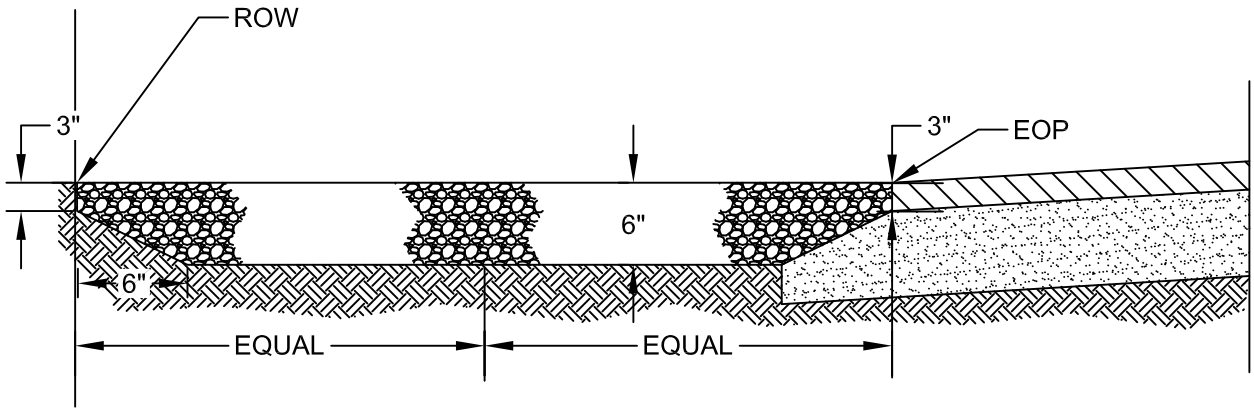

RESTORATION FROM EDGE OF
PAVEMENT TO EDGE OF
RIGHT-OF-WAY

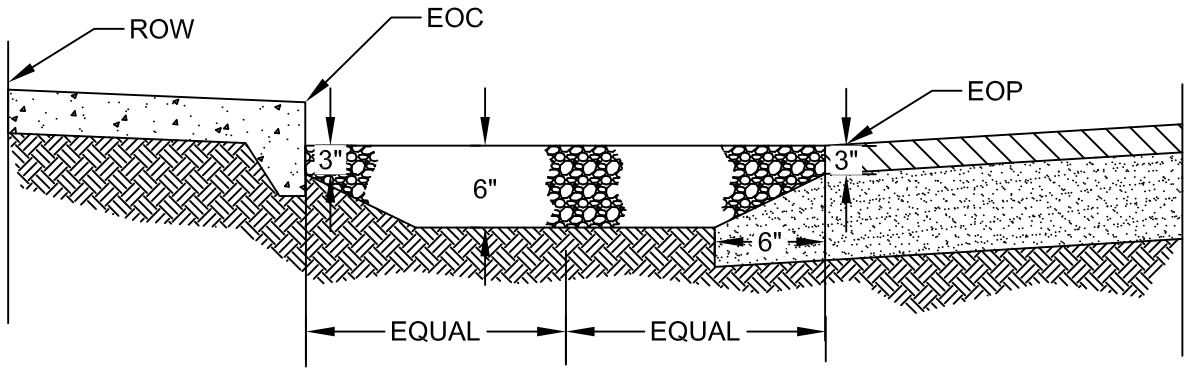

RESTORATION FROM EDGE OF
PAVEMENT TO EDGE OF CURB

NOTES:
1. GRADE EXISTING SWALE OR SHOULDER AS INDICATED
2. INSTALL WASHED #57 STONE; AND COMPACT WITH VIBRATORY COMPACTOR.

SEAL OF THE CITY OF KEY WEST, FLORIDA	City of Key West	TITLE	SWALE RESTORATION	
	Engineering Services 3132 Flagler Avenue, Key West, FL 33040	DRAWN JTJ SCALE NTS	DETAIL	JUL 2015 DETAIL 25

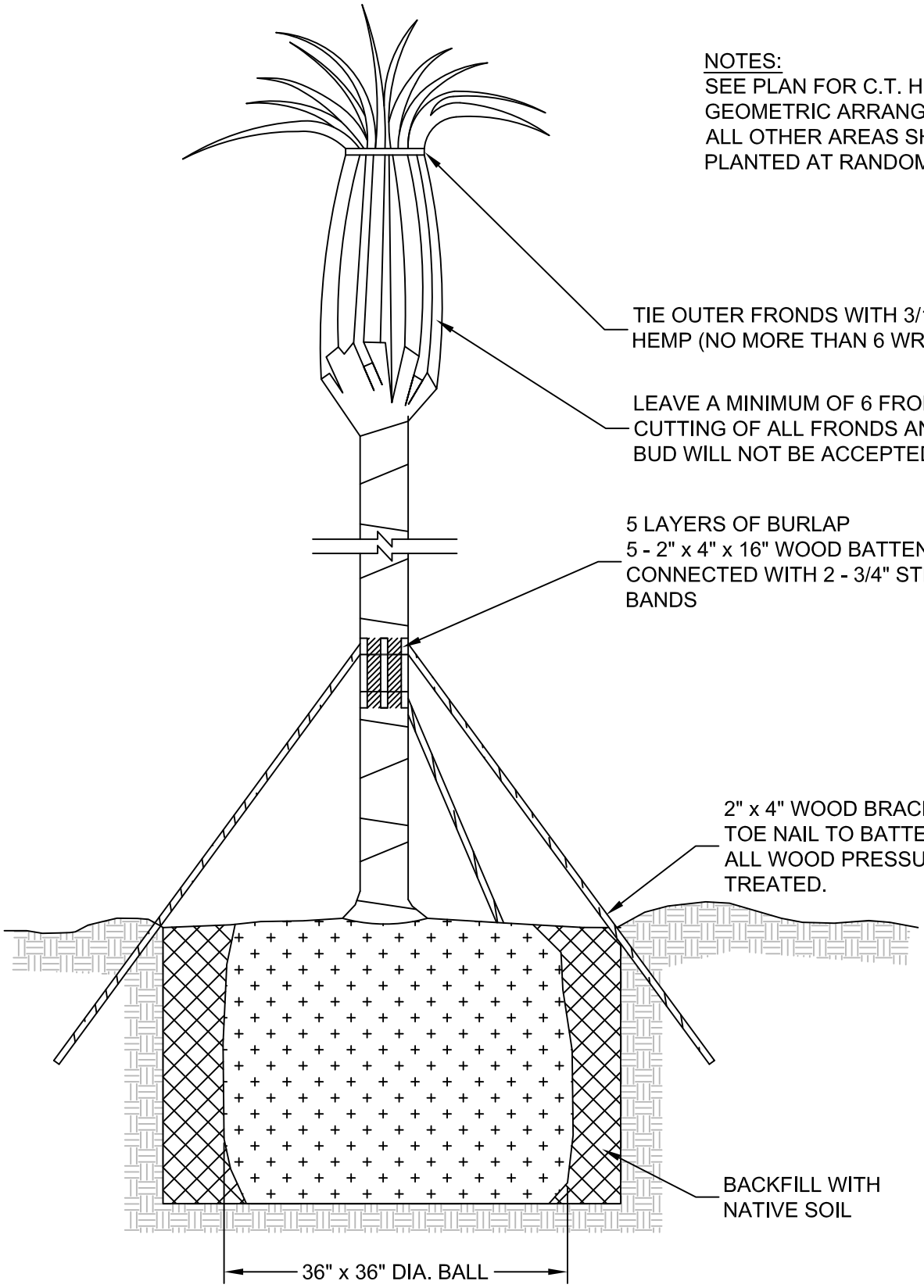

City of Key West Engineering Services 3132 Flagler Avenue, Key West, FL 33040	TITLE TYPICAL PALM PLANTING/STAKING		
	DRAWN JTJ SCALE NTS	STANDARD DETAIL	JUL 2015 DETAIL 26

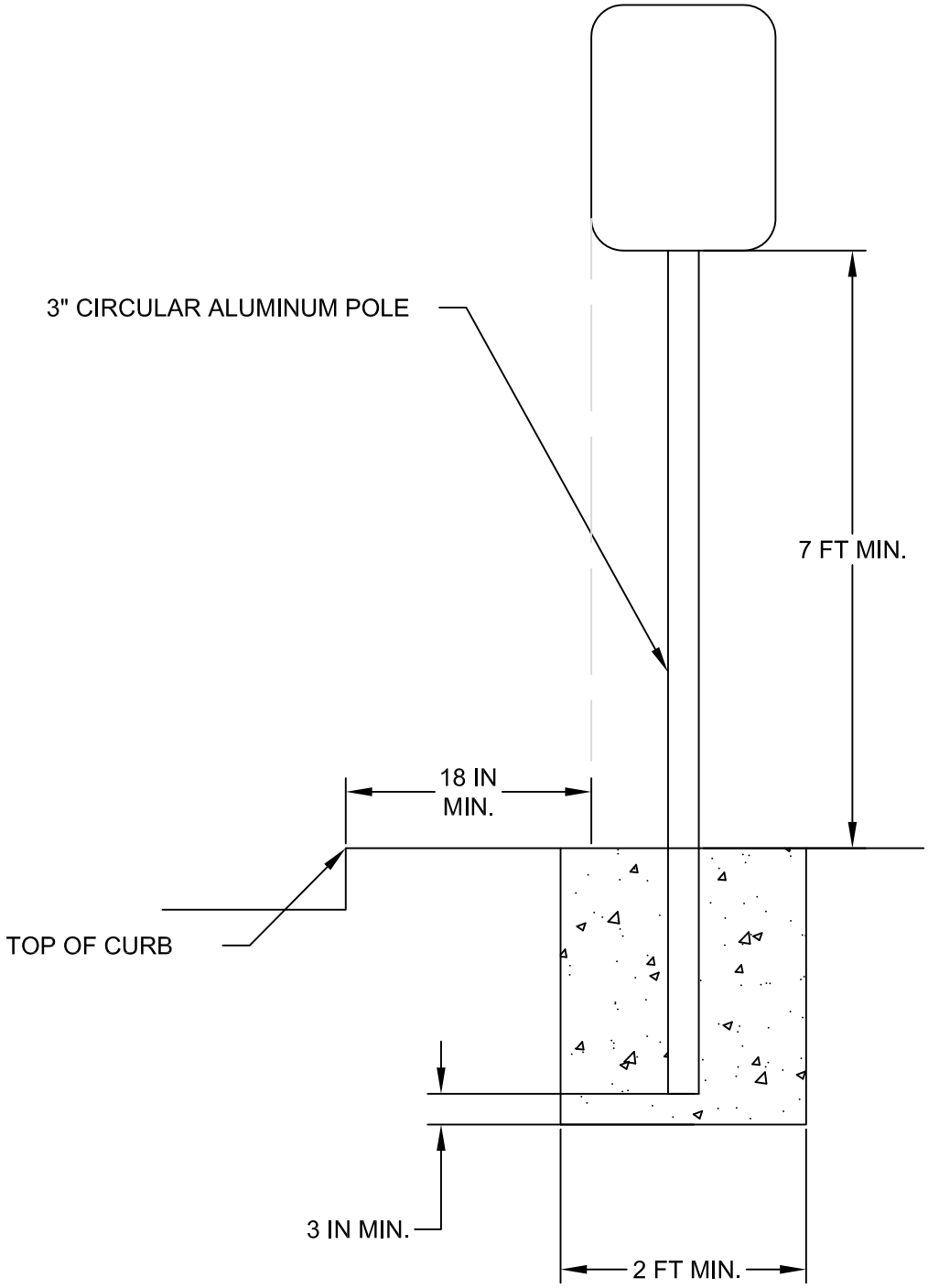

City of Key West Engineering Services 3132 Flagler Avenue, Key West, FL 33040	TITLE TYPICAL SIGN LOCATION		
	DRAWN JTJ SCALE NTS	DETAIL	JUL 2015 DETAIL 27