CONTRACT DOCUMENTS FOR:

ITB # 15-013
CEMETERY SEXTON'S HOUSE

PROJECT #CE1002

February 2015

MAYOR: CRAIG CATES

COMMISSIONERS:

TONY YANIZ

BILLY WARDLOW

JIMMY WEEKLEY

CLAYTON LOPEZ

MARK ROSSI

TERI JOHNSTON

PREPARED BY:
City Of Key West
Engineering Services

COPY NO._____

CITY OF KEY WEST

KEY WEST, FLORIDA

CONTRACT DOCUMENTS

for

CEMETERY
SEXTON'S HOUSE

****

CONSISTING OF:
BID REQUIREMENTS
CONTRACT FORMS
CONDITIONS OF THE CONTRACT
SCOPE OF WORK
SPECIFICATIONS
DRAWINGS

****

KEY WEST, FLORIDA

FEBRUARY 2015

Project No. CE1002 Copy No._____

INFORMATION TO BIDDERS

SUBJECT:	INVITATION TO BID NO. 15-013: CEMETERY SEXTON'S HOUSE
ISSUE DATE:	WEDNESDAY, FEBRUARY 25, 2015
MAIL OR SPECIAL DELIVERY REPONSES TO:	CITY CLERK CITY OF KEY WEST 3126 FLAGLER AVE KEY WEST, FL 33040
DELIVER BIDS TO:	SAME AS ABOVE
BIDS MUST BE RECEIVED:	WEDNESDAY, MARCH 25, 2015
NOT LATER THAN:	3:00 P.M. LOCAL TIME

SUE SNIDER
PURCHASING AGENT
CITY OF KEY WEST

ses

Enclosures

Table of Contents

Page No.

PART 1 - BIDDING REQUIREMENTS

INVITATION TO BID 1
INSTRUCTIONS TO BIDDER 3
PROPOSAL 9
FLORIDA BID BOND 19
ANTI – KICKBACK AFFIDAVIT 22
FLORIDA STATUTES, ON PUBLIC ENTITY CRIMES 23
INDEMNIFICATION FORM 26
LOCAL VENDOR CERTIFICATION 27
DOMESTIC PARTNERSHIP AFFIDAVIT 28
CONE OF SILENCE AFFIDAVIT 29
BIDDER'S CHECKLIST 30

PART 2 - CONTRACT

CONTRACT 32
FLORIDA PERFORMANCE BOND 34
FLORIDA PAYMENT BOND 36

PART 3 - CONDITIONS OF THE CONTRACT

GENERAL CONDITIONS OF THE CONTRACT 39
SUPPLEMENTARY CONDITIONS 57

PART 4 - SCOPE OF WORK

SCOPE OF WORK 66

PART 5 - SPECIFICATIONS AND DRAWINGS

SPECIFICATIONS 70

PART 1

BIDDING REQUIREMENTS

INVITATION TO BID

Sealed bids for the City of Key West ITB #15-013 CEMETERY SEXTON'S HOUSE CE1002, addressed to the City of Key West, will be received at the Office of the City Clerk, 3126 Flagler St., Key West Florida, 33040 until 3:00 pm on March 25, 2015 and then will be publicly opened and read. Any bids received after the time and date specified will not be considered.

Please submit one (1) one original and (1) one flash drive with one single PDF file of the entire bid package. Bid package is to be enclosed in a sealed envelope, clearly marked on the outside "BID FOR CEMETERY SEXTON'S HOUSE CE1002" addressed and delivered to the City Clerk at the address noted above.

The project consists of the construction of a new story one story CBS structure and sitework. **The Owner will complete demolition and clear site of foundations prior to issuing Notice to Proceed.**

Drawings and Specifications may be obtained from Demand Star by Onvia or City of Key West website http://www.cityofkeywest-fl.gov/egov/apps/document/center.egov?view=item;id=5100. For bid package access on Demand Star, please contact Onvia at www.demandstar.com or call 1-800-711-1712.

A **pre-bid meeting** will be held in the conference room at 3126 Flagler Avenue, Key West, Florida on **Tuesday, March 3, 2015 at 9:00 a.m.**

The successful Bidder may be required to furnish the necessary additional bond(s) for the faithful performance of the Contract, as prescribed in the Bidding Documents. The Bidder will be required to furnish documentation showing that he is in compliance with the licensing requirements of the State and the provisions of Chapter 66 section 87 of the Code of Ordinances of the City of Key West. Compliance with these provisions is required before the Contractor can enter into the agreement contained in the Contract Documents. Specifically, Bidder shall demonstrate that he holds, as a minimum, the following licenses and certificates required by State Statute and local codes.

EACH BID MUST BE SUBMITTED ON THE PRESCRIBED FORM AND ACCOMPANIED BY BID SECURITY AS PRESCRIBED IN THE INSTRUCTIONS TO BIDDERS, PAYABLE TO THE CITY OF KEY WEST, FLORIDA, IN AN AMOUNT NOT LESS THAN FIVE (5) PERCENT OF THE AMOUNT BID.

THE BIDDER MUST BE A LICENSED CONTRACTOR BY THE STATE OF FLORIDA AND SUBMIT PROOF OF SUCH WITH THE BID.

The Bidder shall furnish documentation showing that he is in compliance with the licensing requirements of the provisions of Chapter 66 Section 87 of the Code of Ordinances of the City of Key West; within 10 days the following the Notice of Award and must demonstrate that he holds at a minimum, the following licenses & certificates;

A. City of Key West Business Tax License Receipt
B. A valid Certificate of Competency issued by the Chief Building Official of Key West, Florida.

All bid bonds, contract bonds, insurance contracts, and certificates of insurance shall be either executed by or countersigned by a licensed resident agent of the Surety or Insurance Company having his place of business in the State of Florida, and in all ways complying with the insurance laws of the State of

Florida. Further, the said Surety or Insurance Company shall be duly licensed and qualified to do business in the State of Florida.

Before a Contract will be awarded for the work contemplated herein, the CITY will conduct such investigation as is necessary to determine the performance record and ability of the apparent low Bidder to perform the size and type of work specified under this Contract. Upon request, the Bidder shall submit such information as deemed necessary by the CITY to evaluate the Bidder's qualifications.

For information concerning the proposed work or for appointment to visit the site of the proposed work, contact Devon Steckly, Senior Project Manager, Engineering Services Department for the City of Key West at (305) 809-3747 or dsteckly@cityofkeywest-fl.gov.

As stated above at the time of the bid submittal the Bidder must provide satisfactory documentation of State Licenses. The Bidder shall furnish documentation showing that he is in compliance with the licensing requirements of County, and City licenses as would be required within ten days of the award. The successful Bidder must also be able to satisfy the City Attorney as to such insurance coverage and legal requirements as may be demanded by the Bid in question. The City may reject bids for any and/or all of the following reasons: (1) for budgetary reasons, (2) if the bidder misstates or conceals a material fact in its bid, (3) if the bid does not strictly conform to the law or is non-responsive to the bid requirements, (4) if the bid is conditional, or (5) if a change of circumstances occurs making the purpose of the bid unnecessary to the City. The City may also waive any minor formalities or irregularities in any bid, (6) if such rejection is in the best interest of the City.

* * * * * *

INSTRUCTIONS TO BIDDERS

1. CONTRACT DOCUMENTS

A. FORMAT

The Contract Documents are divided into parts, divisions, and sections for convenient organization and reference. Generally, there has been no attempt to divide the sections into work performed by the various building trades, work by separate subcontractors, or work required for separate facilities in the project.

B. DOCUMENT INTERPRETATION

The separate sections contained within these Contract Documents are intended to be mutually cooperative and to provide all details reasonably required for the execution of the proposed work.

Should there be any doubt as to the meaning or intent of said Contract Documents, the Bidder should request of Devon Steckly, Senior Project Manager, dsteckly@cityofkeywest-fl.gov, in writing (at least 10 working days prior to bid opening) an interpretation thereof. Any interpretation or change in said Contract Documents will be made only in writing in the form of Addenda to the documents which will be furnished to all registered holders of Contract Documents. Bidders shall submit with their Proposals, or indicate receipt of, all Addenda. The CITY will not be responsible for any other explanation or interpretations of said Documents.

2. GENERAL DESCRIPTION OF THE PROJECT

A general description of the work to be done is contained in the Invitation to Bid. The scope is specified in applicable parts of these Contract Documents.

3. QUALIFICATION OF CONTRACTORS

The prospective Bidders must meet the statutorily prescribed requirements before award of Contract by the CITY. Bidders must hold or obtain all licenses and/or certificates as required by the State and Local Statutes in order to bid and perform the work specified herein.

4. BIDDER'S UNDERSTANDING

Each Bidder must inform himself of the conditions relating to the execution of the work, and it is assumed that he will inspect the site and make himself thoroughly familiar with all the Contract Documents. Failure to do so will not relieve the successful Bidder of his obligation to enter into a Contract and complete the contemplated work in strict accordance with the Contract Documents. It shall be the Bidder's obligation to verify for himself and to his complete satisfaction all information concerning site and subsurface conditions.

The CITY will make available to prospective Bidders upon request and at the office of the Engineer, prior to bid opening, any information that he may have as to subsurface conditions and

surface topography at the worksite.

Each Bidder shall inform himself of, and the Bidder awarded a Contract shall comply with, federal, state, and local laws, statutes, and ordinances relative to the execution of the work. This requirement includes, but is not limited to, applicable regulations concerning minimum wage rates, nondiscrimination in the employment of labor, protection of public and employee safety and health, environmental protection, the protection of natural resources, fire protection, burning and non-burning requirements, permits, fees, and similar subjects.

5. TYPE OF PROPOSAL

A. LUMP SUM

The Proposal for the work is to be submitted on a lump sum basis. Lump sum prices shall be submitted for all items of work set forth in the Proposal. All items required to complete the work specified but not included in the Proposal shall be considered incidental to those set forth in the Proposal.
The Bidder shall submit a Schedule of Values with the Proposal. It shall be broken down by Technical Specification Divisions included in the Base Bid and it shall be used as a basis for payment. Payment to the Contractor will be made on the measurement of the work actually performed by the Contractor as specified in the Contract Documents.

6. PREPARATION OF BIDS

A. GENERAL

All blank spaces in the BID form must be filled in, as required, preferably in BLACK ink. All price information shall be shown in both words and figures where required. No changes shall be made in the phraseology of the forms. Written amounts shall govern in case of discrepancy between the amounts stated in writing and the amounts stated in figures. In case of discrepancy between unit prices and extended totals, unit prices shall prevail.

Any BID shall be deemed informal which contains omissions, erasures, alterations, or additions of any kind, or prices uncalled for, or in which any of the prices are obviously unbalanced, or which in any manner shall fail to conform to the conditions of the published Invitation to Bid.

Only one BID from any individual, firm, partnership, or corporation, under the same or different names, will be considered. Should it appear to the CITY that any Bidder is interested in more than one Proposal for work contemplated; all Proposals in which such Bidder is interested will be rejected.

B. SIGNATURE

The Bidder shall sign his BID in the blank space provided therefore. If Bidder is a corporation, the legal name of the corporation shall be set forth above, together with the signature of the officer or officers authorized to sign Contracts on behalf of the

corporation. If Bidder is a partnership, the true name of the firm shall be set forth above, together with the signature of the partner or partners authorized to sign Contracts in behalf of the partnership. If signature is by an agent, other than an officer of a corporation or a member of a partnership, a notarized power-of-attorney must be on file with the CITY prior to opening of Proposals or submitted with the Proposal, otherwise the Proposal will be regarded as not properly authorized.

C. SPECIAL BIDDING REQUIREMENTS

The Bidder's attention is brought to the hiring practices and licenses and permits of the City of Key West. These are defined in the addition to Article 39, ORDINANCES, PERMITS, AND LICENSES, as set forth in the Supplementary Conditions.

The Bidder shall submit with his Bid his experience record showing his experience and expertise in CBS construction and related work. Such experience record shall provide at least five current or recent projects of similar work, within the State Florida and preferably Monroe County. For each project the following information shall be provided:

1. Description and location of work.
2. Contract amount.
3. Dates work was performed.
4. Owner.
5. Name of Owner's contact person and phone number.
6. Engineer.
7. Name of Engineer's contact person and phone number.

The bidder shall submit with his bid a list of items to be performed by his own labor and that performed by subcontractors or others.

D. ATTACHMENTS

Bidder shall complete and submit the following forms with his bid:

Anti-Kickback Affidavit
Public Entity Crimes Form
Indemnification Form
Local Vendor Certification
City of Key West Business License Tax Receipt
Domestic Partnership Affidavit
Cone of Silence Affidavit

E. PUBLIC ENTITY CRIMES FORM

Pursuant to the requirements of Chapter 287.133, Laws of Florida, pertaining to the sworn statement on Public Entity Crimes and the Convicted Vendor List, all Bidders shall submit a signed and notarized statement with their Bid on the form provided herein.

7. STATE AND LOCAL SALES AND USE TAXES

Unless the Supplementary Conditions contains a statement that the CITY is exempt from state sales tax on materials incorporated into the work due to the qualification of the work under this Contract, the Contractor, as required by the laws and statutes of the state and its political subdivisions, shall pay all state and local sales and use taxes. Prices quoted in the Proposal shall include all nonexempt sales and use taxes, unless provision is made in the Proposal form to separately itemize the tax.

8. SUBMISSION OF BIDS

All BIDS must be submitted not later than the time prescribed, at the place, and in the manner set forth in the Invitation to Bid. BIDS must be made on the BID forms provided herewith, **submit one (1) ORIGINAL bid package and one (1) FLASH DRIVE containing a single PDF file of the entire bid package.**

Each BID must be submitted in a sealed envelope, so marked as to indicate the Bidder's name and its contents (project name and number) without being opened, and addressed in conformance with the instructions in the Invitation to Bid.

9. MODIFICATION OR WITHDRAWAL OF BIDS

Prior to the time and date designated for receipt of BIDS, any BID submitted may be withdrawn by notice to the party receiving BIDS at the place designated for receipt of BIDS. Such notice shall be in writing over the signature of the Bidder or by telegram. If by telegram, written confirmation over the signature of the Bidder shall be mailed and postmarked on or before the date and time set for receipt of BID. No BID may be withdrawn after the time scheduled for opening of BIDS, unless the time specified in paragraph AWARD OF CONTRACT of these Instructions to Bidders shall have elapsed.

10. BID SECURITY

BIDS must be accompanied by cash, a certified check, or cashier's check drawn on a bank in good standing, or a bid bond issued by a Surety authorized to issue such bonds in the state where the work is located, in the amount of five (5) percent of the total amount of the Proposal submitted. This bid security shall be given as a guarantee that the Bidder will not withdraw his BID for a period of ninety (90) days after bid opening, and that if awarded the Contract, the successful Bidder will execute the attached Contract and furnish properly executed Performance and Payment Bonds, each in the full amount of the Contract price within the time specified. Agent and Surety phone numbers must be provided.

The Attorney-in-Fact who executes this bond in behalf of the Surety must attach a notarized copy of his power-of-attorney as evidence of his authority to bind the Surety on the date of execution of the bond. Where State Statute requires, certification by a resident agent shall also be provided.

If the Bidder elects to furnish a Bid Bond, he shall use the Bid Bond form bound herewith, or one conforming substantially thereto in form and content.

11. RETURN OF BID SECURITY

Within 15 days after the award of the Contract, the CITY will return the bid securities to all Bidders who's BIDS are not to be further considered in awarding the Contract. Retained bid securities will be held until the Contract has been finally executed, after which all bid securities, other than Bidders' bonds and any guarantees, which have been forfeited, will be returned to the respective Bidders whose Proposals they accompanied.

12. AWARD OF CONTRACT

Within ninety (90) calendar days after the opening of Proposals, the CITY will accept one of the Proposals or will act in accordance with the following paragraphs. The acceptance of the Proposal will be by written notice of award, mailed to the office designated in the Proposal, or delivered to the Bidder's representative. In the event of failure of the lowest responsive, responsible Bidder to sign the Contract and provide an acceptable Performance Bond, Payment Bond, insurance certificate(s) and evidence of holding required licenses and certificates, the Owner may award the Contract to the next lowest responsive, responsible Bidder. Such award, if made, will be made within one hundred five (105) days after the opening of Proposals.

The CITY reserves the right to accept or reject any or all Proposals, and to waive any informalities and irregularities in said Proposals.

13. BASIS OF AWARD

The award will be made by the Owner on the basis of the BID (Base Bid + Owner Selected Bid Alternates) from the lowest, responsive, responsible BIDDER which, in the Owner's sole and absolute judgment will best serve the interest of the Owner.

14. EXECUTION OF CONTRACT

The successful Bidder shall, within ten (10) working days after receiving Notice of Award, sign and deliver to the CITY an original Contract and two (2) copies in the form hereto attached, together with the insurance certificate examples of the bonds as required in the Contract Documents and evidence of holding required licenses and certificates. Within 10 working days after receiving the signed Contract from the successful Bidder, the City's authorized agent will sign the Contract. Signature by both parties constitutes execution of the Contract.

15. CONTRACT BONDS

A. PERFORMANCE AND PAYMENT BONDS

The successful Bidder shall file with the CITY, at the time of delivery of the signed Contract, a Performance Bond and Payment Bond on the form bound herewith, each in the full amount of the Contract price in accordance with the requirements of Florida Statutes Section 255.05 or 713.23, as applicable, as security for the faithful performance of the Contract and the payment of all persons supplying labor and materials for the construction of the work, and to cover all guarantees against defective workmanship or materials, or both, during the warranty period following the date of final acceptance of the work by the CITY. The Surety furnishing this bond shall have a sound financial standing and a record of service satisfactory to the CITY, shall be authorized to do business in the State of Florida, and shall be listed on the current U.S. Department of Treasury Circular Number 570, or amendments thereto in the Federal Register, of

acceptable Sureties for federal projects. The CONTRACTOR shall supply the OWNER with phone numbers, addresses, and contacts for the Surety and their agents. Pursuant to Section 255.05(7), Florida Statutes, in lieu of the bond required by law, the contractor may file with the city an alternative form of security in the form of cash, a money order, a certified check, a cashier's check or an irrevocable letter of credit.

B. POWER-OF-ATTORNEY

The Attorney-in-Fact (Resident Agent) who executes this Performance and Payment Bond in behalf of the Surety must attach a notarized copy of his power-of-attorney as evidence of his authority to bind the Surety on the date of execution of the bond.
All Contracts, Performance and Payment Bonds, and respective powers-of-attorney will have the same date.

16. FAILURE TO EXECUTE CONTRACT AND FURNISH BOND

The Bidder who has a Contract awarded to him and who fails to promptly and properly execute the Contract or furnish the required Bonds shall forfeit the bid security that accompanied his bid, and the bid security shall be retained as liquidated damages by the CITY, and it is agreed that this said sum is a fair estimate of the amount of damages the CITY will sustain in case the Bidder fails to enter into a Contract or furnish the required Bonds. Bid security deposited in the form of cash, a certified check, or cashier's check shall be subject to the same requirement as a Bid Bond.

17. PERFORMANCE OF WORK BY CONTRACTOR

The Contractor shall perform on the site and with his own organization, labor equivalent to at least forty (40) percent of the total amount of the work to be performed under this Contract. If, during the progress of the work hereunder, the Contractor requests a reduction of such percentage, and the Engineer determines that it would be to the client's advantage, the percentage of the labor required to be performed by the Contractor's own organization may be reduced; PROVIDED prior written approval of such reduction is obtained by the contractor from the Engineer.

Each Bidder must furnish with his Proposal a list of the items that he will perform with his own forces and the estimated total cost of these items.

18. TIME OF COMPLETION

The time of completion of the work to be performed under this Contract is the essence of the Contract. Delays and extensions of time may be allowed in accordance with the provisions stated in the General Conditions.

When the Contractor receives a Notice to Proceed, he shall commence work as soon as possible and shall complete all work within the number of calendar days stipulated in this Proposal.

The term of this contract will be **150** days.

* * * * * *

NOTE TO BIDDER: Use preferably BLACK ink for completing this Proposal form.

PROPOSAL

To: The City of Key West

Address: 3126 Flagler Street, Key West, Florida 33041

Project Title: CEMETERY SEXTON'S HOUSE CE1002

Bidder's contact person for additional information on this Proposal:

Company Name: _____

Contact Name & Telephone #: _____

Email Address: _____

BIDDER'S DECLARATION AND UNDERSTANDING

The undersigned, hereinafter called the Bidder, declares that the only persons or parties interested in this Proposal are those named herein, that this Proposal is, in all respects, fair and without fraud, that it is made without collusion with any official of the Owner, and that the Proposal is made without any connection or collusion with any person submitting another Proposal on this Contract.

The Bidder further declares that he has carefully examined the Contract Documents for the construction of the project, that he has personally inspected the site, that he has satisfied himself as to the quantities involved, including materials and equipment, and conditions of work involved, including the fact that the description of the quantities of work and materials, as included herein, is brief and is intended only to indicate the general nature of the work and to identify the said quantities with the detailed requirements of the Contract Documents, and that this Proposal is made according to the provisions and under the terms of the Contract Documents, which Documents are hereby made a part of this Proposal.

CONTRACT EXECUTION AND BONDS

The Bidder agrees that if this Proposal is accepted, he will, within 10 days, not including Sundays and legal holidays, after Notice of Award, sign the Contract in the form annexed hereto, and will at that time, deliver to the Owner examples of the Performance Bond and Payment Bond required herein, and evidence of holding required licenses and certificates, and will, to the extent of his Proposal, furnish all machinery, tools, apparatus, and other means of construction and do the work and furnish all the materials necessary to complete all work as specified or indicated in the Contract Documents.

CERTIFICATES OF INSURANCE

Bidder agrees to furnish the Owner, before commencing the work under this Contract, the certificates of insurance as specified in these Documents.

All contractors and subcontractors wishing to perform work for the City of Key West, Florida, will be required to comply with the following minimum insurance requirements:

Commercial General Liability Limits:	$2,000,000 Aggregate $1,000,000 Each Occurrence $2,000,000 Products-Comp / Op Aggregate $1,000,000 Personal Injury $300,000 Fire Damage / Legal

Coverage must include the following:

- Contractual Liability
- CG2010 (1185) or Equivalent
- No exclusion for XCU
- Products / Completed Operations
- Personal Injury
- Commercial Form
- Broad Form Property Damage
- Premises / Operations
- Independent Contractors (if any part of the work is to be subcontracted out)

Automobile Liability:	$1,000,000 Combined Single Limit (Include Hired & Non-Owned Liability)
Additional Umbrella Liability:	$2,000,000 Occurrence / Aggregate
Worker's Compensation:	Statutory
Employer's Liability:	$1,000,000 Each Accident $1,000,000 Disease-Policy Limit $1,000,000 Disease-Each Employee

The Contractor will be required to provide Builders Risk insurance for the completed value of the project.

The above reflects the minimum requirements for working with the City of Key West. Any requirements found in a particular job's contract that are of a higher standard will prevail.

The City of Key West must be named as an additional insured under all policies other than worker's compensation. Contractor's or subcontractor's general liability shall be written on a primary and non-contributory basis. Certificates of insurance must be accompanied by a copy of the additional insured endorsement (CG 20101185 or combination of CG20100704 and CG20370704 will be accepted).

Contractors and subcontractors must obtain an endorsement from their carrier that waives and relinquishes any right of subrogation against the City of Key West and its agents, representatives, employees, and affiliates they might possess for any policy of insurance provided under this requirement or under any state or federal worker's compensation or employer's liability act.

Contractor's policies must be endorsed to give no less than thirty (30) day notice to the City in the event of material change or cancellation.

The City of Key West must be given a certificate of insurance showing that the above requirements have been met. The certificate of insurance must remain current and must include copies of the requested endorsements (additional insured, cancellation notice, and waiver of subrogation) in order for the City to issue payments to the contractor or subcontractor.

START OF CONSTRUCTION AND CONTRACT COMPLETION TIME

The Bidder further agrees to begin work within 14 calendar days after the date of the Notice to proceed and to complete the project, in all respects within 150 calendar days after the date of the Notice to Proceed.

Notice to Proceed will not be issued until Owner completes performing Division 2A Demolition

LIQUIDATED DAMAGES

In the event the Bidder is awarded the Contract and shall fail to complete the work within the time limit or extended time limit agreed upon, as more particularly set forth in the Contract Documents, liquidated damages shall be paid to the Owner at the rate of $1,000.00 per day for all work awarded until the work has been satisfactorily completed as provided by the Contract Documents. Sundays and legal holidays shall be excluded in determining days in default.

ADDENDA

The Bidder hereby acknowledges that he has received Addenda No's. _____, _____, ____, _____, ____, ____, _____, _____, _____, _____, _____, _____, _____, (Bidder shall insert No. of each Addendum received) and agrees that all addenda issued are hereby made part of the Contract Documents, and the Bidder further agrees that his Proposal(s) includes all impacts resulting from said addenda.

SALES AND USE TAXES

The Bidder agrees that all federal, state, and local sales and use taxes are included in the stated bid prices for the work.

LUMP SUM ITEMS

The Bidder further proposes to accept as full payment for the work proposed herein the amounts computed under the provisions of the Contract Documents and based on the following lump sum amounts. The Bidder agrees that the lump sum represent a true measure of the labor and materials required to perform the work, including all allowances for overhead and profit for each type and unit of work called for in these Contract Documents.

BASE BID

1. **Mobilization and Demobilization** (In no case shall the amount bid for this item exceed 5% of the Total Base Bid Amount. Should the amount entered for this item exceed 5%, Owner will reduce it to the maximum allowed amount to determine the correct Total Base Bid amount.)

1 LS $_____

2. **Site Preparation** (includes temporary fence and all work necessary to prepare site for construction)

1 LS $_____

3. **CBS Structure** (Includes all labor, equipment & materials for a complete product)

1 LS $_____

4. **Site Improvements** (includes finish grading, swales, sod, sidewalks, edge walls, concrete pads, pavement markings and ADA signage)

1 LS $_____

5. **Allowance** (only to be used with Owner's written directive, Building Permit and Art in Public Places Fees to be paid for through allowance)

1 LS $**64,000.00**

TOTAL OF BASE BID ITEMS 1 THROUGH 5 LISTED ABOVE:

Total of Base Bid Lump Sum Items 1 - 5 $_____

_____Dollars & _____Cents
(amount written in words)

PROPOSAL CONTINUES ON NEXT PAGE

BID ALTERNATES

NOTE: OWNER HAS THE RIGHT TO ACCEPT OR REJECT ANY, ALL, OR NO BID ALTERNATE ITEMS. THE TOTAL OF BASE BID PLUS THE SUM OF OWNER SELECTED BID ALTERNATES WILL BE THE BASIS OF EVALUATING LOW BIDDER AND BASIS OF AWARD.

1. Furnish and Install Metal Shingle Roof in lieu of Metal V-Crimp Roof
   1 LS $_____

2. Furnish and Install Wood Flooring (includes slab block-out) in Family Room (Room No. 3) in lieu of Vinyl Tile
   1 LS $_____

3. Furnish and Install Cabinetry in Storeroom (Room No. 6) in lieu of Cabinetry and Adjustable Shelving
   1 LS $_____

4. Furnish and Install Mahogany Impact Door and Transom (MK No. 1) in lieu of White Oak Door and Transom and Storm Panel
   1 LS $_____

5. Furnish and Install Air Handling Unit in Attic Space above Maintenance (Room No. 9) and shifting Communications (Room 11) in lieu of installing Air Handling Unit in A/C Closet (Room No. 10)
   1 LS $_____

6. Delete All Exterior Moldings and Related Wood Blocking/CFB, Water Table, Stucco Building Base, 1" Vent with Insect Screen, Mock-Up Section and adjust base bid Facia height and Soffit width along with installing acceptable Pre-manufactured Vents at 10' o.c. spacing
   1 LS $_____

7. Furnish and install a MK "C" Window with related adjustments to wall construction in lieu of constructing Bay in Office (Room No. 4)
   1 LS $_____

8. Furnish and install Cellular PVC Exterior Window Sills in lieu of Precast Concrete Window Sills
   1 LS $_____

9. Furnish and install Cellular PVC Interior Window Sills in lieu of Marble Window Sills
   1 LS $_____

10. Construct ADA Ramp with Ancillary Items to Front Door Porch as detailed on Addendum 1's Sheet 1 in lieu of constructing all Edge Walls with Piers and Swale A

1 LS $_____

The Bidder shall submit a Schedule of Values with the Proposal. It shall be broken down by Technical Specification Divisions included in the Base Bid and it shall be used as a basis for payment. The Bidder will be considered non-responsive if Schedule of Values not included in Bid package.

Payment for materials and equipment authorized by the Owner in a written Change Order but not listed in the above Proposal will be provided at the suppliers invoice plus 10 %.

List items to be performed by CONTRACTOR's own forces and the estimated total cost of these items. (Use additional sheets if necessary.)

_____ _____

_____ _____

_____ _____

_____ _____

_____ _____

_____ _____

_____ _____

SUBCONTRACTORS

The Bidder further proposes that the following subcontracting firms or businesses will be awarded subcontracts for the following portions of the work in the event that the Bidder is awarded the Contract:

_____
Name

_____, _____, _____, _____
Street City State Zip

_____
Name

_____, _____, _____ ,_____
Street City State Zip

_____
Name

_____, _____, _____,_____
Street City State Zip

_____
Name

_____, _____, _____,_____
Street City State Zip

SURETY

_____ whose address is

_____, _____, _____, _____
Street City State Zip

BIDDER

The name of the Bidder submitting this Proposal is

_____ doing business at

_____, _____, _____, _____
Street City State Zip

which is the address to which all communications concerned with this Proposal and with the Contract shall be sent.

The names of the principal officers of the corporation submitting this Proposal, or of the partnership, or of all persons interested in this Proposal as principals are as follows:

_____ _____

_____ _____

_____ _____

_____ _____

_____ _____

If Sole Proprietor or Partnership

IN WITNESS hereto the undersigned has set his (its) hand this _____ day of _____ 2015.

_____
Signature of Bidder

_____
Title

If Corporation

IN WITNESS WHEREOF the undersigned corporation has caused this instrument to be executed and its seal affixed by its duly authorized officers this _____ day of _____ 2015.

(SEAL)

_____
Name of Corporation

By _____

Title _____

Attest_____
Secretary

EXPERIENCE OF BIDDER

The Bidder states that he is an experienced CONTRACTOR and has completed similar projects within the last 5 years.

(List similar projects, with types, names of OWNERs, construction costs, ENGINEERs, and references with phone numbers. Use additional sheets if necessary.)

_____

_____

_____

_____

_____

_____

_____

_____

_____

_____

_____

_____

_____

_____

_____

****

FLORIDA BID BOND

BOND NO. _____

AMOUNT: $_____

KNOW ALL MEN BY THESE PRESENTS, that _____

_____

hereinafter called the PRINCIPAL, and _____

_____

a corporation duly organized under the laws of the State of _____

having its principal place of business at _____

_____in the State of _____,

and authorized to do business in the State of Florida, as SURETY, are held and firmly bound unto

_____

hereinafter called the OBLIGEE, in the sum of_____

DOLLARS ($_____) for the payment for which we bind ourselves, our heirs, executors, administrators, successors, and assigns, jointly and severally, firmly by these present.

THE CONDITION OF THIS BOND IS SUCH THAT:

WHEREAS, the PRINCIPAL is herewith submitting his or its Bid Proposal for Cemetery Mausoleums, said Bid Proposal, by reference thereto, being hereby made a part hereof.

WHEREAS, the PRINCIPAL contemplates submitting or has submitted a bid to the OBLIGEE for

the furnishing of all labor, materials (except those to be specifically furnished by the CITY), equipment, machinery, tools, apparatus, means of transportation for, and the performance of the work covered in the Proposal and the detailed Specifications, entitled:

CEMETERY SEXTON'S HOUSE CE1002

WHEREAS, it was a condition precedent to the submission of said bid that a cashier's check, certified check, or bid bond in the amount of 5 percent of the base bid be submitted with said bid as a guarantee that the Bidder would, if awarded the Contract, enter into a written Contract with the CITY for the performance of said Contract, within 10 working days after written notice having been given of the award of the Contract.

NOW, THEREFORE, the conditions of this obligation are such that if the PRINCIPAL within 10 consecutive calendar days after written notice of such acceptance, enters into a written Contract with the OBLIGEE and furnishes the Performance and Payment Bonds, each in an amount equal to 100 percent of the base bid, satisfactory to the CITY, then this obligation shall be void; otherwise the sum herein stated shall be due and payable to the OBLIGEE and the Surety herein agrees to pay said sum immediately upon demand of the OBLIGEE in good and lawful money of the United States of America, as liquidated damages for failure thereof of said PRINCIPAL.

Signed and sealed this _____ day of _____, 2015.

PRINCIPAL

By_____

_____
SURETY

By _____
Attorney-In-Fact

STATE OF _____)
: SS
COUNTY OF _____)

I, the undersigned hereby duly sworn, depose and say that no portion of the sum herein bid will be paid to any employees of the City of Key West as a commission, kickback, reward or gift, directly or indirectly by me or any member of my firm or by an officer of the corporation.

By: _____

Sworn and subscribed before me this _____day of _____, 2015.

NOTARY PUBLIC, State of _____at Large

My Commission Expires:

* * * * * *

ANTI – KICKBACK AFFIDAVIT

STATE OF _____)
: SS
COUNTY OF _____)

I, the undersigned hereby duly sworn, depose and say that no portion of the sum herein bid will be paid to any employees of the City of Key West as a commission, kickback, reward or gift, directly or indirectly by me or any member of my firm or by an officer of the corporation.

By: _____

Sworn and subscribed before me this _____day of _____, 2015.

NOTARY PUBLIC, State of _____ at Large

My Commission Expires:

* * * * * *

SWORN STATEMENT UNDER SECTION 287.133(3)(A)
FLORIDA STATUTES, ON PUBLIC ENTITY CRIMES

THIS FORM MUST BE SIGNED IN THE PRESENCE OF A NOTARY PUBLIC OR OTHER OFFICER AUTHORIZED TO ADMINISTER OATHS.

1. This sworn statement is submitted with Bid or Proposal for _____

   _____

2. This sworn statement is submitted by_____
   (name of entity submitting sworn statement)

   whose business address is _____

   _____

   and (if applicable) its Federal Employer Identification Number (FEIN) is_____

   _____

   (If the entity has no FEIN, include the Social Security Number of the individual

   signing this sworn statement _____

3. My name is _____
   (please print name of individual signing)

   and my relationship to the entity named above is _____

4. I understand that a "public entity crime" as defined in Paragraph 287.133(1)(g), Florida Statutes, means a violation of any state or federal law by a person with respect to and directly related to the transaction of business with any public entity or with an agency or political subdivision of any other state or with the United States, including but not limited to, any bid or contract for goods or services to be provided to any public or an agency or political subdivision of any other state or of the United States and involving antitrust, fraud, theft, bribery, collusion, racketeering, conspiracy, material misrepresentation.

5. I understand that "convicted" or "conviction" as defined in Paragraph 287.133(1)(b), Florida Statutes, means a finding of guilt or a conviction of a public entity crime, with or without an adjudication guilt, in any federal or state trial court of record relating to charges brought by indictment information after July 1, 1989, as a result of a jury verdict, nonjury trial, or entry of a plea of guilty or nolo contendere.

6. I understand that an "affiliate" as defined in Paragraph 287.133(1)(a), Florida Statutes, means

a. A predecessor or successor of a person convicted of a public entity crime; or

b. An entity under the control of any natural person who is active in the management of the entity and who has been convicted of a public entity crime. The term "affiliate" includes those officers, directors, executives, partners, shareholders, employees, members, and agents who are active in the management of an affiliate. The ownership by one person of shares constituting controlling interest in another person, or a pooling of equipment or income among persons when not for fair market value under an arm's length agreement, shall be a prima facie case that one person controls another person. A person who knowingly enters into a joint venture with a person who has been convicted of a public entity crime in Florida during the preceding 36 months shall be considered an affiliate.

7. I understand that a "person" as defined in Paragraph 287.133(1)(8), Florida Statutes, means any natural person or entity organized under the laws of any state or of the United States with the legal power to enter into a binding contract and which bids or applies to bid on contracts for the provision of goods or services let by a public entity, or which otherwise transacts or applies to transact business with public entity. The term "person" includes those officers, directors, executives, partners, shareholders, employees, members, and agents who are active in management of an entity.

8. Based on information and belief, the statement which I have marked below is true in relation to the entity submitting this sworn statement. (Please indicate which statement applies).

____Neither the entity submitting this sworn statement, nor any officers, directors, executives, partners, shareholders, employees, members, or agents who are active in management of the entity, nor any affiliate of the entity have been charged with and convicted of a public entity crime subsequent to July 1, 1989, AND (Please indicate which additional statement applies.)

_____There has been a proceeding concerning the conviction before a hearing of the State of Florida, Division of Administrative Hearings. The final order entered by the hearing officer did not place the person or affiliate on the convicted vendor list. (Please attach a copy of the final order.)

_____The person or affiliate was placed on the convicted vendor list. There has been a subsequent proceeding before a hearing officer of the State of

Florida, Division of Administrative Hearings. The final order entered by the hearing officer determined that it was in the public interest to remove the person or affiliate from the convicted vendor list. (Please attach a copy of the final order.)

_____The person or affiliate has not been put on the convicted vendor list. (Please describe any action taken by or pending with the Department of General Services.)

_____
(signature)

_____
(date)

STATE OF_____

COUNTY OF_____

PERSONALLY APPEARED BEFORE ME, the undersigned authority,

_____who, after first being sworn by me, affixed his/her
(name of individual signing)

signature in the space provided above on this_____day of _____ , 2015.

My commission expires:

_____
NOTARY PUBLIC

INDEMNIFICATION

To the fullest extent permitted by law, the CONTRACTOR expressly agrees to indemnify and hold harmless the City of Key West, their officers, directors, agents, and employees (herein called the "indemnitees") from liabilities, damages, losses and costs, including, but not limited to, reasonable attorney's fees and court costs, such legal expenses to include costs incurred in establishing the indemnification and other rights agreed to in this Paragraph, to persons or property, to the extent caused by the negligence, recklessness, or intentional wrongful misconduct of the CONTRACTOR, its Subcontractors or persons employed or utilized by them in the performance of the Contract. Claims by indemnitees for indemnification shall be limited to the amount of CONTRACTOR's insurance or $1 million per occurrence, whichever is greater. The parties acknowledge that the amount of the indemnity required hereunder bears a reasonable commercial relationship to the Contract and it is part of the project specifications or the bid documents, if any.

The indemnification obligations under the Contract shall not be restricted in any way by any limitation on the amount or type of damages, compensation, or benefits payable by or for the CONTRACTOR under workers' compensation acts, disability benefits acts, or other employee benefits acts, and shall extend to and include any actions brought by or in the name of any employee of the CONTRACTOR or of any third party to whom CONTRACTOR may subcontract a part or all of the Work. This indemnification shall continue beyond the date of completion of the work.

CONTRACTOR: _____ SEAL:

_____
Address

_____
Signature

_____
Print Name

_____
Title

DATE: _____

LOCAL VENDOR CERTIFICATION PURSUANT TO CKW ORDINANCE 09-22 SECTION 2-798

The undersigned, as a duly authorized representative of the vendor listed herein, certifies to the best of his/her knowledge and belief, that the vendor meets the definition of a "Local Business." For purposes of this section, "local business" shall mean a business which:

a. Principle address as registered with the FL Department of State located within 30 miles of the boundaries of the city, listed with the chief licensing official as having a business tax receipt with its principle address within 30 miles of the boundaries of the city for at least one year immediately prior to the issuance of the solicitation.

b. Maintains a workforce of at least 50 percent of its employees from the city or within 30 miles of its boundaries.

c. Having paid all current license taxes and any other fees due the city at least 24 hours prior to the publication of the call for bids or request for proposals.

- Not a local vendor pursuant to Ordinance 09-22 Section 2-798
- Qualifies as a local vendor pursuant to Ordinance 09-22 Section 2-798

If you qualify, please complete the following in support of the self-certification & submit copies of your County and City business licenses. Failure to provide the information requested will result in denial of certification as a local business.

Business Name _____ Phone:

Current Local Address: _____ Fax:_____
(P.O Box numbers may not be used to establish status)

Length of time at this address:_____

_____Date: _____
Signature of Authorized Representative

STATE OF_____ COUNTY OF_____

The foregoing instrument was acknowledged before me this _____day of_____, 2015.

By_____ , of _____
(Name of officer or agent, title of officer or agent) (Name of corporation acknowledging)

or has produced identification_____as identification
(Type of identification)

_____
Signature of Notary

_____
Print, Type or Stamp Name of Notary

_____
Title or Rank

Return Completed form with Supporting documents to: City of Key West Purchasing

EQUAL BENEFITS FOR DOMESTIC PARTNERS AFFIDAVIT

STATE OF _____)
: SS
COUNTY OF _____)

I, the undersigned hereby duly sworn, depose and say that the firm of _____ provides benefits to domestic partners of its employees on the same basis as it provides benefits to employees' spouses per City of Key West Ordinance Sec. 2-799.

By: _____

Sworn and subscribed before me this

_____ day of _____, 2015.

_____
NOTARY PUBLIC, State of _____ at Large

My Commission Expires: _____

CONE OF SILENCE AFFIDAVIT

STATE OF _____)
: SS
COUNTY OF _____)

I the undersigned hereby duly sworn depose and say that all owner(s), partners, officers, directors, employees and agents representing the firm of _____ have read and understand the limitations and procedures regarding communications concerning City of Key West issued competitive solicitations pursuant to City of Key West Ordinance Section 2-773 Cone of Silence (attached).

Sworn and subscribed before me this

_____ Day of _____, 2015.

_____
NOTARY PUBLIC, State of _____ at Large

My Commission Expires: _____

BIDDER'S CHECKLIST

(Note: The purpose of this checklist is to serve as a reminder of major items to be addressed in submitting a bid and is not intended to be all inclusive. It does not alleviate the Bidder from the responsibility of becoming familiar with all aspects of the Contract Documents and proper completion and submission of his bid.)

1.	All Contract Documents thoroughly read and understood.	[ ]
2.	All blank spaces in Proposal filled in, using black ink.	[ ]
3.	Total and unit prices added correctly and attached Schedule of Values	[ ]
4.	Addenda acknowledged.	[ ]
5.	Subcontractors are named as indicated in the Proposal.	[ ]
6.	Experience record included.	[ ]
7.	Proposal signed by authorized officer.	[ ]
8.	Bid Bond completed and executed, including power-of-attorney dated the same date as Bid Bond.	[ ]
9.	Bidder familiar with federal, state, and local laws, ordinances, rules and regulations affecting performance of the work.	[ ]
10.	Bidder, if successful, able to obtain and/or demonstrate possession of required licenses and certificates within (10) ten calendar days after receiving a Notice of Award.	[ ]
11.	BID submitted intact with the volume entitled “Bidding Requirements” and “Contract Forms”, 1 original and 1 flash drive as stated in the invitation to bid.	[ ]
12.	Bid Documents submitted in sealed envelope and addressed and labeled in conformance with the instructions in the Invitation to Bid.	[ ]

PART 2

CONTRACT FORMS

CONTRACT

This Contract, made and entered into this _____ day of _____ 2015,

by and between the City of Key West, hereinafter called the "Owner", and_____

_____

hereinafter called the "Contractor";

WITNESSETH:

The Contractor, in consideration of the sum to be paid him by the Owner and of the covenants and agreements herein contained, hereby agrees at his own proper cost and expense to do all the work and furnish all the materials, tools, labor, and all appliances, machinery, and appurtenances for ITB #15-013 CEMETERY SEXTON'S HOUSE CE1002, Key West, Florida to the extent of the Proposal made by the Contractor, dated the _____ day of 2015, all in full compliance with the Contract Documents referred to herein.

The CONTRACT DOCUMENTS, including the signed copy of the PROPOSAL, CONTRACT FORMS, PERFORMANCE & PAYMENT BONDS AND SCOPE OF WORK.

In consideration of the performance of the work as set forth in these Contract Documents, the Owner agrees to pay to the Contractor the amount bid in the Proposal as adjusted in accordance with the Contract Documents, or as otherwise herein provided, and to make such payments in the manner and at the times provided in the Contract Documents.

The Contractor agrees to complete the work within one hundred fifty (150) days and to accept as full payment hereunder the amounts computed as determined by the Contract Documents and based on the said BID.

The Contractor agrees to remedy all defects appearing in the work or developing in the materials furnished and the workmanship performed under this Contract during the warranty period after the date of final acceptance of the work by the Owner, and further agrees to indemnify and save the Owner harmless from any costs encountered in remedying such defects.

It is agreed that the Contract, based upon the BID, shall be fully complete within the stated number of consecutive calendar days from the date the Notice to Proceed is issued.

In the event the Contractor fails to complete the work within the time limit or extended time limit agreed upon, as more particularly set forth in the Contract Documents, liquidated damages shall be paid at a rate of $1,000.00 per day. Sundays and legal holidays shall be included in determining days in default.

This contract will automatically expire upon completion of the project. Contractors warranty obligations remain in affect.

IN WITNESS WHEREOF, we, the parties hereto, each herewith subscribe the same this

_____ day of _____, A.D., 2015.

CITY OF KEY WEST

By_____

Title_____

CONTRACTOR

By_____

Title_____

* * * *

FLORIDA PERFORMANCE BOND

BOND NO._____

AMOUNT: $_____

KNOW ALL MEN BY THESE PRESENTS, that in accordance with Florida Statutes Section

255.05 _____

with offices at _____
hereinafter called the CONTRACTOR (Principal), and

_____

with offices at_____
a corporation duly organized and existing under and by virtue of the laws of the State of Florida, hereinafter called the SURETY, and authorized to transact business within the State of Florida, as SURETY, are held and firmly bound unto the **CITY OF KEY WEST,** hereinafter called the CITY (Obligee), in the sum of:

_____DOLLARS ($_____),
lawful money of the United States of America, for the payment of which, well and truly be made to the CITY, the CONTRACTOR and the SURETY bind themselves and each of their heirs, executors, administrators, successors, and assigns, jointly and severally, firmly by these presents as follows:

THE CONDITION OF THE ABOVE OBLIGATION IS SUCH THAT:
WHEREAS, the CONTRACTOR has executed and entered into a certain Contract hereto attached, with the CITY, dated _____, 2015, to furnish at his own cost, charges, and expense all the necessary materials, equipment, and/or labor in strict and express accordance with said Contract and the Contract Documents as defined therein, all of which is made a part of said Contract by certain terms and conditions in said Contract more particularly mentioned, which Contract, consisting of the various Contract Documents is made a part of this Bond as fully and completely as if said Contract Documents were set forth herein;

NOW THEREFORE, the conditions of this obligation are such that if the above bounden CONTRACTOR:

1. Shall in all respects comply with the terms and conditions of said Contract and his obligation there under, including the Contract Documents (which include the scope of work and conditions as prepared by the CITY, invitation to bid, instructions to bidders, the CONTRACTOR'S bid as accepted by the above CITY, the bid and contract performance and payment bonds, and all addenda, if any, issued prior to the opening of bids), being made a part of this bond by reference, at the times and in the manner prescribed in the contract; and

2. Promptly makes payments to all claimants, as defined in Section 255.05(1), Florida Statutes, supplying PRINCIPAL with labor, materials, or supplies, used directly or indirectly by PRINCIPAL in the prosecution of the work provided for in the contract; and

3. Pays CITY all losses, costs, expenses, damages, attorney's fees, including appellate proceedings, injury or loss of whatever kind and however arising including, without limitation, delay damages to which said CITY may be subject by reason of any wrongdoing, misconduct, want of care or skill, negligence, failure of performance, breach, failure to petition within the prescribed time, or default, including patent infringements, on the part of said CONTRACTOR, his agents or employees, in the execution or performance of said Contract; and

4. Performs the guarantee of all work and materials furnished under the contract for the time specified in the contract, then this obligation shall be void; otherwise, to remain in full force and effect for the term of said Contract.

AND, the said Surety for value received, hereby stipulates and agrees that no change involving any extension of time, or addition to the terms of the Contract Documents, or to the work to be performed, or materials to be furnished there under shall affect said obligation of said Surety on this Bond, and the said Surety does hereby waive notice of any such changes, extension of time, alterations, or additions of the terms of the Contract Documents, or to the work.

Any action instituted by a claimant under this bond for payment must be in accordance with the notice and time limitation provisions in Section 255.05(2), Florida Statutes.

IN WITNESS WHEREOF, the above parties bonded together have executed this instrument

this _____ day of _____, 2015, the name and corporate seal of each corporate party being hereto affixed and those presents duly signed by its undersigned representative, pursuant to authority of its governing body.

CONTRACTOR

By: _____

(SEAL)

ATTEST

SURETY

By: _____

(SEAL)

ATTEST

FLORIDA PAYMENT BOND

BOND NO._____

AMOUNT: $_____

KNOW ALL MEN BY THESE PRESENTS, that in accordance with Florida Statutes Section

255.05,_____

with offices at_____
hereinafter called the CONTRACTOR, (Principal), and

_____

with offices at _____

a corporation duly organized and existing under and by virtue of the laws of the State of _____

_____ , hereinafter called the SURETY, and authorized to transact business within the State of Florida, as SURETY, are held and firmly bound unto CITY OF KEY WEST**,** hereinafter called the City (Obligee), in the sum of:

_____DOLLARS(_____), lawful money of the United States of America, for the payment of which, well and truly be made to the CITY, and the CONTRACTOR and the SURETY bind themselves and each of their heirs, executors, administrators, successors, and assigns, jointly and severally, firmly by these presents as follows:

THE CONDITION OF THE ABOVE OBLIGATION IS SUCH THAT:

WHEREAS, the CONTRACTOR has executed and entered into a certain Contract for

ITB #15-013 CEMETERY SEXTON'S HOUSE CE1002 attached hereto, with the CITY, dated

_____, 2015, to furnish at his own cost, charges, and expense the necessary materials, equipment, and/or labor in strict and express accordance with said Contract and the plans, drawings (if any), and specifications prepared by the CITY, all of which is made a part of said Contract by certain terms and conditions in said Contract more particularly mentioned, which Contract, consisting of the various Contract Documents specifically mentioned herein and relative hereto, is made a part of this Bond as fully and completely as if said Contract Documents were set forth herein.

NOW THEREFORE, the conditions of this obligation are such that if the above bounden CONTRACTOR shall in all respects comply with the terms and conditions of said Contract and

his obligation thereunder, including the Contract Documents ,which include Scope of work and conditions prepared by the CITY, invitation to bid, instructions to bidders, the

CONTRACTOR'S bid as accepted by the CITY, the bid and contract and payment bonds, and all addenda, if any, issued prior to the opening of bids), and further that if said CONTRACTOR shall promptly make payments to all persons supplying materials, equipment, and/or labor, used directly or indirectly by said CONTRACTOR or subcontractors in the prosecution of the work for said contract is accordance with Florida Statutes, Section 255.05 or Section 713.23, then this obligation shall be void; otherwise to remain in full force and effect for the term of said contract, including and all guarantee periods as specifically mentioned in said Contract Documents.

AND, the said SURETY for value received, hereby stipulates and agrees that no change involving any extension of time, or addition to the terms of the Contract or to the work to be performed, or materials to be furnished thereunder, or in the Contract Documents and specifications accompanying the said contract shall affect said obligation of said SURETY on this Bond, and the said SURETY does hereby waive notice of any such changes, extension of time, alternations, or additions of the terms of the Contract, or to the work, to the Contract Documents, or to the specifications.

Claimant shall give written notice to the CONTRACTOR and the SURETY as required by Section 255.05 or Section 713.23, Florida Statutes. Any action instituted against the CONTRACTOR or SURETY under this bond for payment must be in accordance with the notice and time limitation provisions in Section 255.05(2) or Section 713.23, Florida Statutes.

IN WITNESS WHEREOF, the above parties bounded together have executed this instrument

this _____ day of _____, 2015, the name and corporate seal of each corporate party being hereto affixed and those presents duly signed by its undersigned representative, pursuant to authority of its governing body.

CONTRACTOR

By:_____

(SEAL)

ATTEST

SURETY

By:_____

(SEAL)

ATTEST

PART 3

CONDITIONS OF THE CONTRACT

Article

DEFINITIONS

1. AS APPROVED
2. AS SHOWN, AND AS INDICATED
3. BIDDER
4. CONTRACT DOCUMENTS
5. CONTRACTOR
6. CONTRACT COMPLETION
7. DAYS
8. DRAWINGS
9. ENGINEER
10. NOTICE
11. OR EQUAL
12. OWNER
13. PLANS
14. SPECIFICATIONS
15. NOTICE TO PROCEED
16. SUBSTANTIAL COMPLETION
17. WORK

CONTRACT DOCUMENTS

18. INTENT OF CONTRACT DOCUMENTS
19. DISCREPANCIES AND OMISSIONS
20. CHANGES IN THE WORK
21. EXAMINATION AND VERIFICATION OF CONTRACT DOCUMENTS
22. DOCUMENTS TO BE KEPT ON THE JOBSITE
23. ADDITIONAL CONTRACT DOCUMENTS
24. OWNERSHIP OF CONTRACT DOCUMENTS

THE ENGINEER

25. AUTHORITY OF THE ENGINEER
26. DUTIES AND RESPONSIBILITIES OF THE ENGINEER
27. LIMITATIONS ON ENGINEER'S RESPONSIBILITIES
28. REJECTED WORK
29. LINES AND GRADES
30. SUBMITTALS
31. DETAIL DRAWINGS AND INSTRUCTIONS

THE CONTRACTOR AND HIS EMPLOYEES

32. CONTRACTOR, AN INDEPENDENT AGENT
32. (a) ASSIGNMENT OF CONTRACT
33. SUBCONTRACTING
34. INSURANCE AND LIABILITY
A. GENERAL
B. CONTRACTOR AND SUB-CONTRACTOR INSURANCE
C. COMPENSATION AND EMPLOYER'S LIABILITY INSURANCE
D. GENERAL LIABILITY INSURANCE (INCLUDING AUTOMOBILE)
E. BUILDER'S RISK ALL RISK INSURANCE
F. NO PERSONAL LIABILITY OF PUBLIC OFFICIALS
35. INDEMNITY
36. EXCLUSION OF CONTRACTOR CLAIMS
37. TAXES AND CHARGES
38. REQUIREMENTS OF STATE LAW FOR PUBLIC WORKS PROJECTS
39. CODES, ORDINANCES, PERMITS, AND LICENSES
40. SUPERINTENDENCE
41. RECEPTION OF ENGINEER'S COMMUNICATIONS
42. SAFETY
43. PROTECTION OF WORK AND PROPERTY
44. RESPONSIBILITY OF CONTRACTOR TO ACT IN AN EMERGENCY
45. MATERIALS AND APPLIANCES
46. CONTRACTORS' AND MANUFACTURERS' COMPLIANCE WITH STATE SAFETY, OSHA AND OTHER CODE REQUIREMENTS
47. SUBSTITUTION OF MATERIALS
48. TESTS, SAMPLES, AND OBSERVATIONS
49. ROYALTIES AND PATENT
50. CONTRACTOR'S RIGHT TO TERMINATE CONTRACT
51. CORRECTION OF DEFECTIVE WORK DURING WARRANTY PERIOD

PROGRESS OF THE WORK

52. BEGINNING OF THE WORK
53. SCHEDULES AND PROGRESS REPORTS
54. PROSECUTION OF THE WORK
55. OWNER'S RIGHT TO RETAIN IMPERFECT WORK
56. OWNER'S RIGHT TO DO WORK
57. OWNER'S RIGHT TO TRANSFER EMPLOYMENT
58. DELAYS AND EXTENSION OF TIME
59. DIFFERING SITE CONDITION

Article

60. LIQUIDATED DAMAGES
61. OTHER CONTRACTS
62. USE OF PREMISES
63. SUBSTANTIAL COMPLETION DATE
64. PERFORMANCE TESTING
65. OWNER'S USE OF PORTION OF THE WORK
66. CUTTING AND PATCHING
67. CLEANING UP

PAYMENT

68. CHANGE ORDERS
A. UNIT PRICE
B. LUMP SUM
C. COST REIMBURSEMENT WORK
69. PARTIAL PAYMENTS
A. GENERAL
B. ESTIMATE
C. DEDUCTION FROM ESTIMATE
D. QUALIFICATIONS FOR PARTIAL PAYMENT FOR MATERIALS DELIVERED
E. PAYMENT
70. CLAIMS FOR EXTRA WORK
71. RELEASE OF LIENS OR CLAIMS
72. FINAL PAYMENT
73. NO WAIVER OF RIGHTS
74. ACCEPTANCE OF FINAL PAYMENT CONSTITUTES RELEASE

****

DEFINITIONS

Whenever in the Contract Documents the following terms are used, the intent and meaning shall be interpreted as follows:

1. AS APPROVED

The words "as approved", unless otherwise qualified, shall be understood to be followed by the words "by the ENGINEER for conformance with the Contract Document".

2. AS SHOWN, AND AS INDICATED

The words "as shown" and "as Indicated" shall be understood to be followed by the words "on the Drawings".

3. BIDDER

The person or persons, partnership, firm, or corporation submitting a Proposal for the work contemplated.

4. CONTRACT DOCUMENTS

The "Contract Documents" consist of the Bidding Requirements, Contract Forms, Conditions of the Contact, Specifications, Drawings, all modifications thereof incorporated into the Documents before their execution, Change Orders, and all other requirements incorporated by specific reference thereto. These form the Contract.

5. CONTRACTOR

The person or persons, partnership, firm, or corporation who enters into the Contract awarded him by the OWNER.

6. CONTRACT COMPLETION

The "Contract Completion" is the date the OWNER accepts the entire work as being in compliance with the Contract Documents, or formally waives nonconforming work to extent of nonconformity, and issues the final payment in accordance with the requirements set forth in Article, "Final Payment" of these General Conditions.

7. DAYS

Unless otherwise specifically stated, the term "days" will be understood to mean calendar days. Business day or working day means any day other than Saturday, Sunday, or legal holiday.

8. DRAWINGS

The term "Drawings" refers to the official Drawings, Profiles, cross sections, elevations, details, and other working drawings and supplementary drawings, or reproductions thereof, signed by the ENGINEER, which shows the location, character, dimensions, and details of the work to be performed. Drawings may either be bound in the same book as the balance of the Contract Documents, or bound in separate sets, and are a part of the Contract Documents, regardless of the method of binding.

9. ENGINEER

The person or organization identified as such in the Contract Documents. The Term "ENGINEER" means ENGINEER or his authorized representative.

10. NOTICE

The term "notice" or the requirement to notify, as used in the Contract Documents or applicable state or federal statutes, shall signify a written communication delivered in person or by registered mail to the individual, or to a member of the firm, or to an officer of the corporation for whom it is intended. Certified or registered mail shall be addressed to the last business address known to him who gives the notice.

11. OR EQUAL

The term "or equal" shall be understood to indicate that the "equal" Product is equivalent to or better than the Product named in function, performance, reliability, quality, and general configuration. Determination of equality in reference to the Project design requirements will be made by the ENGINEER. Such equal Products shall not be purchased or installed by the CONTRACTOR without written authorization.

12. OWNER

The person, organization, or public body identified as such in the Contract Documents.

13. PLANS (See Drawings)

14. SPECIFICATIONS

The term "Specifications" refers to those portions of the Contract Documents consisting of written technical descriptions of materials, equipment, construction systems, standards, and workmanship as applied to the work and certain

administrative details applicable thereto. Where standard specifications, such as those of ASTM, AASHTO, etc., have been referred to, the applicable portions of such standard specifications shall become a part of these Contract Documents. If referenced specifications conflict with specifications contained herein, the requirements contained herein shall prevail.

15. NOTICE TO PROCEED

A written notice given by the OWNER to the CONTRACTOR (with a copy to the ENGINEER) fixing the date on which the Contract time will commence to run and on which the CONTRACTOR shall start to perform his obligation under the Contract Documents. The Notice to Proceed will be given within 30 days following the execution of the Contract by the OWNER.

16. SUBSTANTIAL COMPLETION

"Substantial Completion" shall be that degree of completion of the Project or a defined portion of the Project, as evidenced by the ENGINEER's written notice of Substantial Completion, sufficient to Provide the OWNER, at his discretion, the full-time use of the Project or defined portion of the Project for the purposes for which it was intended. "Substantial Completion" of an operating facility shall be that degree of completion that has Provided a minimum of 7 continuous days of successful, trouble-free, operation, which period shall begin after all performance and acceptance testing has been successfully demonstrated to the ENGINEER. All equipment contained in the work, plus all other components necessary to enable the OWNER to operate the facility in a manner that was intended, shall be complete on the substantial completion date.

17. WORK

The word "work" within these Contract Documents shall include all material, labor, tools, and all appliances, machinery, transportation, and appurtenances necessary to perform and complete the Contract, and such additional items not specifically indicated or described which can be reasonably inferred as belonging to the item described or indicated and as required by good Practice to Provide a complete and satisfactory system or structure. As used herein, "Provide" shall be understood to mean "furnish and install, complete in-place ".

<u>CONTRACT DOCUMENTS</u>

18. INTENT OF CONTRACT DOCUMENTS

The Contract Documents are complementary, and what is called for by one shall be as binding as if called for by all. The intent of the Documents is to describe a functionally complete Project (or part thereof) to be constructed in accordance with the Contract Documents. Any work, materials, or equipment that may reasonably be inferred from the Contract Documents as being required to produce the intended result shall be supplied whether or not specifically called for. When words which have a well-known technical or trade meaning are used to describe work, materials, or equipment, such words shall be interpreted in accordance with that meaning.

Reference to standard specifications, manuals, or codes of any technical society, organization or association, or to the laws or regulations of any governmental authority, whether such reference be specific or by implication, shall mean the latest standard specification, manual, code or laws or regulations in effect on the first published date of the Invitation to Bid, except as may be otherwise specifically stated. However, no Provision of any referenced standard specification, manual or code (whether or not specifically incorporated by reference in the Contract Documents) shall be effective to change the duties and responsibilities of OWNER, CONTRACTOR, or ENGINEER, or any of their consultants, agents, or employees from those set forth in the Contract Documents, nor shall it be effective to assign to ENGINEER, or any ENGINEER's consultants, agents, or employees, any duty or authority to supervise or direct the furnishing or performance of the work or any duty or authority to undertake responsibility contrary to the Provisions of Article LIMITATIONS ON ENGINEER'S RESPONSIBILITIES.

19. DISCREPANCIES AND OMISSIONS

Any discrepancies or omissions found in the Contract Documents shall be reported to the ENGINEER immediately. The ENGINEER will clarify discrepancies or omissions, in writing, within a reasonable time.

In resolving inconsistencies among two or more sections of the Contract Documents, Precedence shall be given in the following order:

A. CONTRACT
B. PROPOSAL
C. SUPPLEMENTARY CONDITIONS
D. INVITATION TO BID
E. INSTRUCTIONS TO BIDDERS
F. GENERAL CONDITIONS
G. SPECIFICATIONS
H. DRAWINGS

Addenda shall take Precedence over all sections referenced therein. Figure dimensions on Drawings shall take precedence over scale dimensions. Detailed Drawings shall take precedence over general Drawings.

20. CHANGES IN THE WORK

The OWNER, without notice to the Sureties and without invalidating the Contract, may order changes in the work

within the general scope of the Contract by altering, adding to, or deducting from the work, the Contract being adjusted accordingly. All such work shall be executed under the conditions of the original Contract, except as specifically adjusted at the time of ordering such change.

In giving instructions, the ENGINEER may order minor changes in the work not involving extra cost and not inconsistent with the purposes of the Project, but otherwise, except in an emergency endangering life and Property, additions or deductions from the work shall be performed only in pursuance of an approved Change Order from the OWNER, countersigned by the ENGINEER.

If the work is reduced by alterations, such action shall not constitute a claim for damages based on loss of anticipated Profits.

21. EXAMINATION AND VERIFICATION OF CONTRACT DOCUMENTS

The CONTRACTOR shall thoroughly examine and become familiar with all of the various parts of these Contract Documents and determine the nature and location of the work, the general and local conditions, and all other matters, which can in any way affect the work under this Contract. Failure to make an examination necessary for this determination shall not release the CONTRACTOR from the obligations of this Contract. No verbal agreement or conversation with any officer, agent, or employee of the OWNER or with the ENGINEER either before or after the execution of this Contract shall affect or modify any of the terms or obligations herein contained.

22. DOCUMENTS TO BE KEPT ON THE JOBSITE

The CONTRACTOR shall keep one copy of the Contract Documents on the job- site, in good order, available to the ENGINEER and to his representatives.

The CONTRACTOR shall maintain on a daily basis at the jobsite, and make available to the ENGINEER on request, one current record set of the Drawings which have been accurately marked to indicate all modifications in the completed work that differ from the design information shown on the Drawings. Upon Substantial completion of the work, the CONTRACTOR shall give the ENGINEER one complete set of these marked up record Drawings.

23. ADDITIONALCONTRACT DOCUMENTS

Copies of Contract Documents or Drawings may be obtained on request from the ENGINEER and by paying the actual cost of reproducing the Contract Documents or Drawings.

24. OWNERSHIP OF CONTRACT DOCUMENTS

All portions of the Contract Documents, and copies thereof furnished by the ENGINEER are instruments of service for this Project. They are not to be used on other work and are to be returned to the ENGINEER on request at the completion of the work. Any reuse of these materials without specific written verification or adaptation by the ENGINEER will be at the risk of the user and without liability or legal expense to the ENGINEER. Such user shall hold the ENGINEER harmless from any and all damages, including reasonable attorneys' fees, from any and all claims arising from any such reuse. Any such verification and adaptation shall entitle the ENGINEER to further compensation at rates to be agreed upon by the user and the ENGINEER.

<u>THE ENGINEER</u>

25. AUTHORITY OF THE ENGINEER

The ENGINEER will be the OWNER's representative during the construction period. His authority and responsibility will be limited to the Provisions set forth in these Contract Documents. The ENGINEER will have the Authority to reject work that does not conform to the Contract Documents. However, neither the ENGINEER's authority to act under this Provision, nor any decision made by him in good faith either to exercise or not to exercise such authority, shall give rise to any duty or responsibility of the ENGINEER to the CONTRACTOR, any SUBCONTRACTOR, their respective Sureties, any of their agents or employees, or any other person performing any of the work.

26. DUTIES AND RESPONSIBILITIES OF THE ENGINEER

The ENGINEER will make visits to the site at intervals appropriate to the various stages of construction to observe the Progress and quality of the work and to determine, in general, if the work is proceeding in accordance with the intent of the Contract Documents. He will not make comprehensive or continuous review or observation to check quality or quantity of the work, and he will not be responsible for construction means, methods, techniques, sequences, or Procedures, or for safety Precautions and Programs in connection with the work. Visits and observations made by the ENGINEER shall not relieve the CONTRACTOR of his obligation to conduct comprehensive inspections of the work and to furnish materials and perform acceptable work, and to provide adequate safety Precautions, in conformance with the intent of the Contract.

The ENGINEER will make recommendations to the OWNER, in writing, on all claims of the OWNER or the CONTRACTOR arising from interpretation or execution of

the Contract Documents. Such recommendations will be of factual and/or technical nature, and will not include the legal interpretation of the Contract Documents. Any necessary legal interpretation of the Contract Document will be made by the OWNER. Such recommendation shall be necessary before the CONTRACTOR can receive additional money under the terms of the Contract. Changes in work ordered by the ENGINEER shall be made in compliance with Article CHANGES IN THE WORK.

One or more Project representatives may be assigned to observe the work. It is understood that such Project representatives shall have the authority to issue notice of nonconformance and make decisions within the limitations of the authority of the ENGINEER. The CONTRACTOR shall furnish all reasonable assistance required by the ENGINEER or Project representatives for Proper observation of the work. The above-mentioned Project representatives shall not relieve the CONTRACTOR of his obligations to conduct comprehensive inspections of the work and to furnish materials and perform acceptable work, and to provide adequate safety Precautions, in conformance with the intent of the Contract.

27. LIMITATIONS ON ENGINEER'S RESPONSIBILITIES

ENGINEER will not be responsible for CONTRACTOR's means, methods, techniques, sequences, or Procedures of construction, or the safety Precautions and Programs incident thereto, and ENGINEER will not be responsible for CONTRACTOR's failure to perform or furnish the work in accordance with the Contract Documents.

ENGINEER will not be responsible for the acts or omissions of CONTRACTOR or of any SUBCONTRACTOR, any supplier, or of any other person or organization performing or furnishing any of the work.

Whenever in the Contract Documents the terms "as ordered", "as directed", "as required", "as allowed", "as approved", or terms of like effect or import are used, or the adjectives "reasonable", "suitable", "acceptable", "Proper", or "satisfactory", or adjectives of like effect or import are used to describe a requirement, direction, review or judgment of ENGINEER as to the work, it is intended that such requirement, direction, review or judgment will be solely to evaluate the work for compliance with the Contract Documents (unless there is a specific statement indicating otherwise). The use of any such term or adjective shall not be effective to assign to ENGINEER any duty or authority to supervise or direct the furnishing or performance of the work or any duty or authority to undertake responsibility contrary to the Provisions of this Article.

28. REJECTED WORK

Any defective work or nonconforming materials or equipment that may be discovered at any time prior to expiration of the warranty period shall be removed and replaced by work which shall conform to the Provisions of the Contract Documents. Any material condemned or rejected shall be removed at once from the Project site.

Failure on the part of the ENGINEER to condemn or reject bad or inferior work or to note nonconforming materials or equipment on CONTRACTOR submittals shall not be construed to imply acceptance of such work. The OWNER shall reserve and retain all of its rights and remedies at law against the CONTRACTOR and its Surety for correction of any and all latent defects discovered after the guarantee period.

29. LINES AND GRADES

Lines and grades shall be established as provided in the supplementary conditions. All stakes, marks, and other reference information shall be carefully preserved by the CONTRACTOR, and in case of their careless or unnecessary destruction or removal by him or his employees, such stakes, marks, and other information shall be replaced at the CONTRACTOR's expense.

30. SUBMITTALS

After checking and verifying all field measurements and after complying with applicable Procedures specified in Division I, GENERAL REQUIREMENTS, CONTRACTOR shall submit to ENGINEER, in accordance with the schedule for submittals for review, shop drawings, electrical diagrams, and catalog cuts for fabricated items and manufactured items (including mechanical and electrical equipment), which shall bear a stamp or specific written indication that CONTRACTOR has satisfied CONTRACTOR's responsibilities under the Contract Documents with respect to the review of the submittal. All submittals shall be identified as ENGINEER may require. The data shown shall be complete with respect to quantities, dimensions specified, performance and design criteria, materials, and similar data to enable ENGINEER to review the information. CONTRACTOR shall also submit to ENGINEER for review, with such Promptness as to cause no delay in work, all samples required by the Contract Documents. All samples shall have been checked by and accompanied by a specific written indication that CONTRACTOR has satisfied CONTRACTOR's responsibilities under the Contract Documents with respect to the review of the submission and shall be identified clearly as to material, supplier, pertinent data such as catalog numbers and the use for which intended.

Before submission of each submittal, CONTRACTOR shall have determined and verified all quantities, dimensions, specified performance criteria, installation requirements,

materials, catalog numbers, and similar data with respect thereto and reviewed or coordinated each submittal with other submittals and with the requirements of the work and the Contract Documents.

At the time of each submission, CONTRACTOR shall give ENGINEER specific written notice of each variation that the submittal may have from the requirements of the Contract Documents, and, in addition, shall cause a specific notation to be made on each shop drawing submitted to ENGINEER for review and approval of each variation.

ENGINEER will review submittals with reasonable Promptness, but ENGINEER's review will be only for conformance with the design concept of the Project and for compliance with the information given in the Contract Documents and shall not extend to means, methods, techniques, sequences, or Procedures of construction (except where a specific means, method, technique, sequence, or Procedure of construction is indicated in or required by the Contract Documents) or to safety Precautions or Programs incident thereto. The review of a separate item as such will not indicate review of the assembly in which the item functions. CONTRACTOR shall make corrections required by ENGINEER, and shall return the required number of corrected copies of shop drawings and submit as required new samples for review. CONTRACTOR shall direct specific attention in writing to revisions other than the corrections called for by ENGINEER on Previous submittals.

ENGINEER's review of submittals shall not relieve CONTRACTOR from the responsibility for any variation from the requirements of the Contract Documents unless CONTRACTOR has in writing called ENGINEER's attention to each such variation at the time of submission and ENGINEER has given written approval of each such variation by a specific written notation thereof incorporated therein or accompanying the shop drawing or sample approval; nor will any approval by ENGINEER relieve CONTRACTOR from responsibility for errors or omissions in the shop drawings or from responsibility for having complied with the Provisions herein.
Where a shop drawing or sample is required by the specifications, any related work performed Prior to ENGINEER's review and approval of the pertinent submission shall be at the sole expense and responsibility of the CONTRACTOR.

31. DETAIL DRAWINGS AND INSTRUCTIONS

The ENGINEER will furnish, with reasonable Promptness, additional instructions by means of Drawings or otherwise, if, in the ENGINEER's opinion, such are required for the Proper execution of the work. All such Drawings and instructions will be consistent with the Contract Documents, true developments thereof, and reasonably inferable there from.

THE CONTRACTOR AND HIS EMPLOYEES

32. CONTRACTOR, AN INDEPENDENT AGENT

The CONTRACTOR shall independently perform all work under this Contract and shall not be considered as an agent of the OWNER or of the ENGINEER, nor shall the CONTRACTOR's SUBCONTRACTORS or employees be subagents of the OWNER or of the ENGINEER.

32. (a) ASSIGNMENT OF CONTRACT

Assignment of any part or the whole of this Contract shall be subject to review and approval of the City Commission.

33. SUBCONTRACTING

Unless modified in the Supplementary Conditions, within 10 days after the execution of the Contract, the CONTRACTOR shall submit to the ENGINEER the names of all SUBCONTRACTORS Proposed for the work, including the names of any SUBCONTRACTORS that were submitted with the Proposal. The CONTRACTOR shall not employ any SUBCONTRACTORS to which the OWNER may object to as lacking capability to properly perform work of the type and scope anticipated.

The CONTRACTOR is as fully responsible to the OWNER for the acts and omissions of his SUBCONTRACTORS and of persons either directly or indirectly employed by them as he is for the acts and omissions of persons directly employed by him.

Nothing contained in the Contract Documents shall create any contractual relationship between any SUBCONTRACTOR and the OWNER or ENGINEER.

34. INSURANCE AND LIABILITY

A. GENERAL

The CONTRACTOR shall provide (from insurance companies acceptable to the OWNER) the insurance coverage designated hereinafter and pay all costs before commencing work under this Contract. The CONTRACTOR shall furnish the OWNER with certificates of insurance specified herein showing the type, amount class of operations covered, effective dates, and date of expiration of policies, and containing substantially the following statement:

"The insurance covered by this certificate shall not be canceled or materially altered, except after 30 days' written notice has been received by the OWNER."

In case of the breach of any Provision of this Article, the OWNER, at his option, may take out and maintain, at the expense of the CONTRACTOR, such insurance as the OWNER may deem Proper and may deduct the cost of such insurance from any monies which may be due or become due the CONTRACTOR under this Contract.

B. CONTRACTOR AND SUBCONTRACTOR INSURANCE

The CONTRACTOR shall not commence work under this Contract until he has obtained all the insurance required hereunder and such insurance has been reviewed by the OWNER, nor shall the CONTRACTOR allow any SUBCONTRACTOR to commence work on his subcontract until insurance specified below has been obtained. Review of the insurance by the OWNER shall not relieve or decrease the liability of the CONTRACTOR hereunder.

C. COMPENSATION AND EMPLOYER'S LIABILITY INSURANCE

The CONTRACTOR shall maintain during the life of this Contract the statutory amount of Workmen's Compensation Insurance, in addition, Employer's Liability Insurance in an amount as specified in the Supplementary Conditions, for each occurrence, for all of his employees to be engaged in work on the Project under this Contract. In case any such work is subcontracted, the CONTRACTOR shall require the SUBCONTRACTOR to provide similar Workmen's Compensation and Employer's Liability Insurance for all of the SUBCONTRACTOR's employees to be engaged in such work.

D. GENERAL LIABILITY INSURANCE (INCLUDING AUTOMOBILE)

The CONTRACTOR shall maintain during the life of this Contract such general liability, completed operations and Products liability, and automobile liability insurance as will Provide coverage for claims for damages for personal injury, including accidental death, as well as for claims for Property damage, which may arise directly or indirectly from performance of the work under this Contract. The general liability policy shall include contractual liability assumed by the CONTRACTOR under Article **INDEMNITY.** Coverage for Property damage shall be on a "broad form" basis with no exclusions for "X, C & U". The amount of insurance to be provided shall be as specified in the Supplementary Conditions.

In the event any work under this Contract is performed by a SUBCONTRACTOR, the CONTRACTOR shall be responsible for any liability directly or indirectly arising out of the work performed by the SUBCONTRACTOR; to the extent such liability is not covered by the SUBCONTRACTOR's insurance.

The OWNER and ENGINEER, their officers, agents, and employees shall be named as Additional Insured's on the CONTRACTOR's and any SUBCONTRACTOR's general liability and automobile liability insurance policies for any claims arising out of work performed under this Contract.

E. BUILDERS RISK ALL RISK INSURANCE

Unless otherwise modified in the Supplementary Conditions, the CONTRACTOR shall secure and maintain during the life of this Contract, Builders Risk All Risk Insurance coverage in an amount equal to the full value of the facilities under construction. Such insurance shall include coverage for earthquake, landslide, flood, collapse, loss due to the results of faulty workmanship or design, and all other normally covered risks, and shall provide for losses to be paid to the CONTRACTOR, OWNER, and ENGINEER as their interests may appear.

The OWNER and ENGINEER, their officers, agents, and employees shall be named as additional insured's on the CONTRACTOR's and any SUBCONTRACTOR's Builders Risk All Risk insurance policies for any claims arising out of work performed under this Contract.

This insurance shall include a waiver of subrogation as to the ENGINEER, the OWNER, the CONTRACTOR, and their respective officers, agents, employees and SUBCONTRACTORS.

F. NO PERSONAL LIABILITY OF PUBLIC OFFICIALS

In carrying out any of the Provisions hereof in exercising any authority granted by the Contract, there will be no personal liability upon any public official.

35. INDEMNITY

To the maximum extent permitted by law, the CONTRACTOR shall indemnify and defend the OWNER and the ENGINEER, and their officers, employees, agents, and sub-consultants, from all claims and losses, including attorney's fees and litigation costs arising out of Property losses or health, safety, personal injury, or death claims by the CONTRACTOR, its SUBCONTRACTORS of any tier, and their employees, agents, or invitees regardless of the fault, breach of Contract, or negligence of the OWNER or ENGINEER, excepting only such claims or losses that have been adjudicated to have been caused solely by the negligence of the OWNER or the ENGINEER and regardless of whether or not the CONTRACTOR is or can be named a party in a litigation.

36. EXCLUSION OF CONTRACTOR CLAIMS

In performing its obligations, the ENGINEER and its consultants may cause expense for the CONTRACTOR or its SUBCONTRACTORS and equipment or material suppliers. However, those parties and their sureties shall maintain no direct action against the ENGINEER, its officers, employees, agents, and consultants for any claim arising out of, in connection with, or resulting from the engineering services performed or required to be performed.

37. TAXES AND CHARGES

The CONTRACTOR shall withhold and pay any and all sales and use taxes and all withholding taxes, whether State or Federal, and pay all Social Security charges and also all State Unemployment Compensation charges, and pay or cause to be withheld, as the case may be, any and all taxes, charges, or fees or sums whatsoever, which are now or may hereafter be required to be paid or withheld under any laws.

38. REQUIREMENTS OF STATE LAW FOR PUBLIC WORKS PROJECTS

When the Contract Documents concern public works of the state or any county, municipality, or political subdivision created by its laws, the applicable statutes shall apply. All parties to this Contract shall determine the contents of all applicable statutes and comply with their Provisions throughout the performance of the Contract.

39. CODES, ORDINANCES, PERMITS AND LICENSES

The CONTRACTOR shall keep himself fully informed of all local codes and ordinances, as well as state and federal laws, which in any manner affect the work herein specified. The CONTRACTOR shall at all times comply with said codes and ordinances, laws, and regulations, and Protect and indemnify the OWNER, the ENGINEER and their respective employees, and its officers and agents against any claim or liability arising from or based on the violation of any such laws, ordinances, or regulations. All permits, licenses and inspection fees necessary for Prosecution and completion of the work shall be secured and paid for by the CONTRACTOR, unless otherwise specified.

40. SUPERINTENDENCE

The CONTRACTOR shall keep at the project site, competent supervisory personnel. The CONTRACTOR shall designate, in writing, before starting work, a Project superintendent who shall be an employee of the CONTRACTOR and shall have complete authority to represent and to act for the CONTRACTOR. ENGINEER shall be notified in writing prior to any change in superintendent assignment. The CONTRACTOR shall give efficient supervision to the work, using his best skill and attention. The CONTRACTOR shall be solely responsible for all construction means, methods, techniques, and Procedures, and for providing adequate safety Precautions and coordinating all portions of the work under the Contract. It is specifically understood and agreed that the ENGINEER, its employees and agents, shall not have control or charge of and shall not be responsible for the construction means, methods, techniques, Procedures, or for providing adequate safety Precautions in connection with the work under Contract.

41. RECEPTION OF ENGINEER'S COMMUNICATIONS

The superintendent shall receive for the CONTRACTOR all communications from the ENGINEER. Communications of major importance will be confirmed in writing upon request from the CONTRACTOR.

The ENGINEER may schedule Project meetings for the purposes of discussing and resolving matters concerning the various elements of the work. Time and place for these meetings and the names of persons required to be Present shall be as determined by the ENGINEER. CONTRACTOR shall comply with these attendance requirements and shall also require his SUBCONTRACTORS to comply.

42. SAFETY

The CONTRACTOR shall be solely and completely responsible for conditions of the jobsite, including safety of all persons (including employees) and Property during performance of the work. This requirement shall apply continuously and not be limited to normal working hours. Safety Provisions shall conform to U.S. Department of Labor (OSHA), and all other applicable federal, state, county, and local laws, ordinances, codes, and regulations. Where any of these are in conflict, the more stringent requirement shall be followed. The CONTRACTOR's failure to thoroughly familiarize himself with the aforementioned safety Provisions shall not relieve him from compliance with the obligations and penalties set forth therein.

The CONTRACTOR shall develop and maintain for the duration of this Contract, a safety Program that will effectively incorporate and implement all required safety Provisions. The CONTRACTOR shall appoint an employee who is qualified and authorized to supervise and enforce compliance with the safety Program. The duty of the ENGINEER to conduct construction review of the work does not include review or approval of the adequacy of the CONTRACTOR's safety Program, safety supervisor, or any safety measures taken in, on, or near the construction site. The CONTRACTOR, as a part of his safety Program, shall maintain at his office or other well-known place at the jobsite, safety equipment applicable to

the work as Prescribed by the aforementioned authorities, all articles necessary for giving first-aid to the injured, and shall establish the Procedure for the immediate removal to a hospital or a doctor's care of persons (including employees) who may be injured on the jobsite.

If death or serious injuries or serious damages are caused, the accident shall be reported immediately by telephone or messenger to both the ENGINEER and the OWNER. In addition, the CONTRACTOR must promptly report in writing to the ENGINEER all accidents whatsoever arising out of, or in connection with, the performance of the work whether on, or adjacent to, the site, giving full details and statements of witnesses.

If a claim is made by anyone against the CONTRACTOR or any SUBCONTRACTOR on account of any accident, the CONTRACTOR shall promptly report the facts in writing to the ENGINEER, giving full details of the claim.

43. PROTECTION OF WORK AND PROPERTY

The CONTRACTOR shall at all times safely guard and Protect from damage the OWNER's Property, adjacent Property, and his own work from injury or loss in connection with this Contract. All facilities required for Protection by federal, state, or municipal laws and regulations and local conditions must be provided and maintained.

The CONTRACTOR shall Protect his work and materials from damage due to the nature of the work, the elements, carelessness of other CONTRACTORs, or from any cause whatever until the completion and acceptance of the work. All loss or damages arising out of the nature of the work to be done under these Contract Documents, or from any unforeseen obstruction or defects which may be encountered in the Prosecution of the work, or from the action of the elements, shall be sustained by the CONTRACTOR.

44. RESPONSIBILITY OF CONTRACTOR TO ACT IN AN EMERGENCY

In case of an emergency which threatens loss or injury of Property, and/or safety of life, the CONTRACTOR shall act, without previous instructions from the OWNER or ENGINEER, as the situation may warrant. The CONTRACTOR shall notify the ENGINEER thereof immediately thereafter. Any claim for compensation by the CONTRACTOR, together with substantiating documents in regard to expense, shall be submitted to the OWNER through the ENGINEER and the amount of compensation shall be determined by agreement.

45. MATERIALS AND APPLIANCES

Unless otherwise stipulated, the CONTRACTOR shall Provide and pay for all materials, labor, water, tools, equipment, heat, light, fuel, power, transportation, construction equipment and machinery, appliances, telephone, sanitary facilities, temporary facilities and other facilities and incidentals necessary for the execution and completion of the work.

Unless otherwise specified, all materials shall be new, and both workmanship and materials shall be of good quality. The CONTRACTOR shall, if required, furnish satisfactory evidence as to the kind and quality of materials.

In selecting and/or approving equipment for installation in the Project, the OWNER and ENGINEER assume no responsibility for injury or claims resulting from failure of the equipment to comply with applicable federal, state, and local safety codes or requirements, or the safety requirements of a recognized agency, or failure due to faulty design concepts, or defective workmanship and materials.

46. CONTRACTORS' AND MANUFACTURERS' COMPLIANCE WITH STATE SAFETY, OSHA, AND OTHER CODE REQUIREMENTS

The completed work shall include all necessary permanent safety devices, such as machinery guards and similar ordinary safety items required by the state and federal (OSHA) industrial authorities and applicable local and national codes. Further, any features of the work subject to such safety regulations shall be fabricated, furnished, and installed (including OWNER-furnished equipment) in compliance with these requirements. CONTRACTORs and manufacturers of equipment shall be held responsible for compliance with the requirements included herein. CONTRACTORs shall notify all equipment suppliers and SUBCONTRACTORS of the Provisions of this Article.

47. SUBSTITUTION OF MATERIALS

Except for OWNER-selected equipment items, and items where no substitution is clearly specified, whenever any material, article, device, Product, fixture, form, type of construction, or Process is indicated or specified by patent or Proprietary name, by name of manufacturer, or by catalog number, such specifications shall be deemed to be used for the purpose of establishing a standard of quality and facilitating the description of the material or Process desired. This Procedure

is not to be construed as eliminating from competition other Products of equal or better quality by other manufacturers where fully suitable in design, and shall be deemed to be followed by the words "or equal". The CONTRACTOR may, in such cases, submit complete data to the ENGINEER for consideration of another material, type, or Process that shall be substantially equal in every respect to that so indicated or specified. Substitute materials shall not be used unless approved in writing. The ENGINEER will be the sole judge

of the substituted article or material.

48. TESTS, SAMPLES, AND OBSERVATIONS

The CONTRACTOR shall furnish, without extra charge, the necessary test pieces and samples, including facilities and labor for obtaining the same, as requested by the ENGINEER. When required, the CONTRACTOR shall furnish certificates of tests of materials and equipment made at the point of manufacture by a recognized testing laboratory.

The OWNER, ENGINEER, and authorized government agents, and their representatives shall at all times be Provided safe access to the work wherever it is in Preparation or Progress, and the CONTRACTOR shall Provide facilities for such access and for observations, including maintenance of temporary and permanent access.

If the Specifications, laws, ordinances, or any public authority require any work, to be specially tested or approved, the CONTRACTOR shall give timely notice of its readiness for observations. If any work should be covered up without approval or consent of the ENGINEER, it shall, if required by the ENGINEER, be uncovered for examination at the CONTRACTOR's expense.
Reexamination of questioned work may be ordered by the ENGINEER, and, if so ordered, the work shall be uncovered by the CONTRACTOR. If such work is found to be in accordance with the Contract Documents, the OWNER will pay the cost of uncovering, exposure, observation, inspection, testing and reconstruction. If such work is found to be not in accordance with the Contract Documents, the CONTRACTOR shall correct the defective work, and the cost of reexamination and correction of the defective work shall be paid by the CONTRACTOR.

49. ROYALTIES AND PATENTS

The CONTRACTOR shall pay all royalty and licenses fees, unless otherwise specified. The CONTRACTOR shall defend all suits or claims for infringement of any patent rights and shall save the OWNER and the ENGINEER harmless from any and all loss, including reasonable attorneys' fees, on account thereof.

50. CONTRACTOR'S RIGHT TO TERMINATE CONTRACT

If the work should be stopped under an order of any court or other public authority for a period of more than 3 months, through no act or fault of the CONTRACTOR, its SUBCONTRACTORS, or respective employees or if the ENGINEER should fail to make recommendation for payment to the OWNER or return payment request to CONTRACTOR for revision within 30 days after it is due, or if the OWNER should fail to pay the CONTRACTOR within 30 days after time specified in Article PARTIAL PAYMENTS, any sum recommended by the ENGINEER, then the CONTRACTOR may, upon 15 days' written notice to the OWNER and the ENGINEER, stop work or terminate this Contract and recover from the OWNER payment for all acceptable work performed and reasonable termination expenses, unless said default has been remedied.

51. CORRECTION OF DEFECTIVE WORK DURING WARRANTY PERIOD

The CONTRACTOR hereby agrees to make, at his own expense, all repairs or replacements necessitated by defects in materials or workmanship, Provided under terms of this Contract, and pay for any damage to other works resulting from such defects, which become evident within 2 years after the date of final acceptance of the work or within 2 years after the date of substantial completion established by the ENGINEER for specified items of equipment, or within such longer period as may be Prescribed by law or by the terms of any applicable special guarantee required by the Contract Documents. Un-remedied defects identified for correction during the warranty period but remaining after its expiration shall be considered as part of the obligations of the warranty. Defects in material, workmanship, or equipment which are remedied as a result of obligations of the warranty shall subject the remedied portion of the work to an extended warranty period of 2 years after the defect has been remedied.

The CONTRACTOR further assumes responsibility for a similar guarantee for all work and materials provided by SUBCONTRACTORS or manufacturers of packaged equipment components. The effective date for the start of the guarantee or warranty period for equipment qualifying as substantially complete is defined in Article SUBSTANTIAL COMPLETION, AND Article SUBSTANTIAL COMPLETION DATE, in these General Conditions.

The CONTRACTOR also agrees to hold the OWNER and the ENGINEER harmless from liability of any kind arising from damage due to said defects. The CONTRACTOR shall make all repairs and replacements promptly upon receipt of written order for same from the OWNER. If the CONTRACTOR fails to make the repairs and replacements promptly, or in an emergency where delay would cause serious risk, or loss, or damage, the OWNER may have the defective work corrected or the rejected work removed and replaced, and the CONTRACTOR and his Surety shall be liable for the cost thereof.

PROGRESS OF THE WORK

52. BEGINNING OF THE WORK

Following execution of the Contract, the CONTRACTOR shall meet with the OWNER and ENGINEER relative to his

arrangements for prosecuting the work.

53. SCHEDULES AND PROGRESS REPORTS

Prior to starting the construction, the CONTRACTOR shall Prepare and submit to the ENGINEER, a Progress schedule showing the dates on which each part or division of the work is expected to be started and finished, and a Preliminary schedule for submittals. The Progress schedule for submittals shall be brought up to date and submitted to the ENGINEER at the end of each month or at such other times the ENGINEER may request.

The CONTRACTOR shall forward to the ENGINEER, at the end of each month, an itemized report of the delivery status of major and critical items of purchased equipment and material, including shop drawings and the status of shop and field fabricated work. These Progress reports shall indicate the date of the purchase order, the current percentage of completion, estimated delivery, and cause of delay, if any.

If the completion of any part of the work or the delivery of materials is behind the submitted Progress schedule, the CONTRACTOR shall submit in writing a plan acceptable to the OWNER and ENGINEER for bringing the work up to schedule.

The OWNER shall have the right to withhold Progress payments for the work if the CONTRACTOR fails to update and submit the Progress schedule and reports as specified.

54. PROSECUTION OF THE WORK

It is expressly understood and agreed that the time of beginning, rate of Progress, and time of completion of the work are the essence of this Contract. The work shall be prosecuted at such time, and in or on such part or parts of the Project as may be required, to complete the Project as contemplated in the Contract Documents and the Progress schedule.

If the CONTRACTOR desires to carry on work at night or outside the regular hours, he shall give timely notice to the ENGINEER to allow satisfactory arrangements to be made for observing the work in Progress.

55. OWNER'S RIGHT TO RETAIN IMPERFECT WORK

If any part or portion of the work completed under this Contract shall Prove defective and not in accordance with the Drawings and Specifications, and if the imperfection in the same shall not be of sufficient magnitude or importance as to make the work dangerous or unsuitable, or if the removal of such work will create conditions which are dangerous or undesirable, the OWNER shall have the right and authority to retain such work but will make such deductions in the final payment therefore as may be just and reasonable.

56. OWNER'S RIGHT TO DO WORK

Should the CONTRACTOR neglect to Prosecute the work in conformance with the Contract Documents or neglect or refuse at his own cost to remove and replace work rejected by the ENGINEER, then the OWNER may notify the Surety of the condition, and after 10 days' written notice to the CONTRACTOR and the Surety, or without notice if an emergency or danger to the work or public exists, and without Prejudice to any other right which the OWNER may have under Contract, or otherwise, take over that portion of the work which has been improperly or non timely executed, and make good the deficiencies and deduct the cost thereof from the payments then or thereafter due the CONTRACTOR.

57. OWNER'S RIGHT TO TRANSFER EMPLOYMENT

If the CONTRACTOR should abandon the work or if he should persistently or repeatedly refuse or should fail to make prompt payment to SUBCONTRACTORS for material or labor, or to persistently disregard laws, ordinances, or to prosecute the work in conformance with the Contract Documents, or otherwise be guilty of a substantial violation of any Provision of the Contract or any laws or ordinance, then the OWNER may, without Prejudice to any other right or remedy, and after giving the CONTRACTOR and Surety 10 days' written notice, transfer the employment for said work from the CONTRACTOR to the Surety. Upon receipt of such notice, such Surety shall enter upon the Premises and take possession of all materials, tools, and appliances thereon for the purpose of completing the work included under this contract and employ by Contract or otherwise, any qualified person or persons to finish the work and Provide the materials therefore, in accordance with the Contract Documents, without termination of the continuing full force and effect of this contract. In case of such transfer of employment to such Surety, the Surety shall be paid in its own name on estimates according to the terms hereof without any right of the CONTRACTOR to make any claim for the same or any part thereof.

If, after the furnishing of said written notice to the Surety, the CONTRACTOR and the Surety still fail to make reasonable Progress on the performance of the work, the OWNER may terminate the employment of the CONTRACTOR and take possession of the Premises and of all materials, tools, and appliances thereon and finish the work by whatever method he may deem expedient and charge the cost thereof to the CONTRACTOR and the Surety. In such case, the CONTRACTOR shall not be entitled to receive any further payment until the work is finished. If the expense of

completing the Contract, including compensation for additional managerial and administrative services, shall exceed such unpaid balance, the CONTRACTOR and the Surety shall pay the difference to the OWNER.

58. DELAYS AND EXTENSION OF TIME

If the CONTRACTOR is delayed in the Progress of the work by any act or neglect of the OWNER or the ENGINEER, or by any separate CONTRACTOR employed by the OWNER, or by strikes, lockouts, fire, adverse weather conditions not reasonably anticipated, or acts of Nature, and if the CONTRACTOR, within 48 hours of the start of the occurrence, gives written notice to the OWNER of the cause of the potential delay and estimate of the possible time extension involved, and within 10 days after the cause of the delay has been remedied, the CONTRACTOR gives written notice to the OWNER of any actual time extension requested as a result of the aforementioned occurrence, then the Contract time may be extended by change order for such reasonable time as the ENGINEER determines. It is agreed that no claim shall be made or allowed for any damages, loss, or expense which may arise out of any delay caused by the above referenced acts or occurrences other than claims for the appropriate extension of time. No extension of time will be granted to the CONTRACTOR for delays occurring to parts of the work that have no measurable impact on the completion of the total work under this Contract. No extension of time will be considered for weather conditions reasonably anticipated for the area in which the work is being performed. Reasonably anticipated weather conditions will be based on official records of monthly Precipitation and other historical data. Adverse weather conditions, if determined to be of a severity that would impact Progress of the work, may be considered as cause for an extension of Contract completion time.

Delays in delivery of equipment or material purchased by the CONTRACTOR or his SUBCONTRACTORS, including OWNER-selected equipment shall not be considered as a just cause for delay, unless the OWNER determines that for good cause the delay is beyond the control of the CONTRACTOR. The CONTRACTOR shall be fully responsible for the timely ordering, scheduling, complete the work is the per-diem rate, as stipulated in the Proposal. The said amount is hereby agreed upon as a reasonable estimate of the costs, which may be accrued by the OWNER after the expiration of the time of completion. It is expressly under- stood and agreed that this amount is not to be considered in the nature of a penalty, but as liquidated damages which have accrued against the CONTRACTOR. The OWNER shall have the right to deduct such damages from any amount due, or that may become due the CONTRACTOR, or the amount of such damages shall be due and collectible from the CONTRACTOR or Surety.

59. DIFFERING SITE CONDITIONS

The CONTRACTOR shall promptly, and before the conditions are disturbed, give a written notice to the OWNER and ENGINEER of:

A. subsurface or latent physical conditions at the site which differ materially from those indicated in this contract,

B. unknown physical conditions at the site, of an unusual nature, which differ materially from those ordinarily encountered and generally recognized as inherent in work of the character provided for in the Contract.

The ENGINEER will investigate the site conditions promptly after receiving the notice. If the conditions do materially so differ and cause an increase or decrease in the CONTRACTOR's cost of, or the time required for, performing any part of the work under this Contract, whether or not changed as a result of the conditions, and equitable adjustment shall be made under this Article and the Contract modified in writing accordingly.

No request by the CONTRACTOR for an equitable adjustment to the Contract under this Article will be allowed, unless the CONTRACTOR has given the written notice required; Provided that the time prescribed above for giving written notice may be extended by the OWNER.

No request by the CONTRACTOR for an equitable adjustment to the Contract for differing site conditions will be allowed if made after final payment under this Contract.

60. LIQUIDATED DAMAGES

Should the CONTRACTOR fail to complete the work, or any part thereof, in the time agreed upon in the Contract or within such extra time as may have been allowed for delays by extensions granted as Provided in the Contract, the CONTRACTOR shall reimburse the OWNER for the additional expense and damage for each calendar day, Sundays and legal holidays included, that the Contract remains uncompleted after the Contract completion date. It is agreed that the amount of such additional expense and damage incurred by reason of failure to complete the work is the per-diem rate, as stipulated in the Proposal. The said amount is hereby agreed upon as a reasonable estimate of the costs which may be accrued by the OWNER after the expiration of the time of completion. It is expressly under- stood and agreed that this amount is not to be considered in the nature of a penalty, but as liquidated damages which have accrued against the CONTRACTOR. The OWNER shall have the right to deduct such damages from any amount due, or that may become due the CONTRACTOR, or the amount of such damages shall be due and collectible from the CONTRACTOR or Surety.

61. OTHER CONTRACTS

The OWNER reserves the right to let other Contracts in connection with the work. The CONTRACTOR shall afford other CONTRACTORs reasonable opportunity for the introduction and storage of their materials and the execution of their work and shall properly connect and coordinate his work with theirs.

If any part of the work under this Contract depends for Proper execution or results upon the work of any other CONTRACTOR, utility service company or OWNER, the CONTRACTOR shall inspect and Promptly report to the ENGINEER in writing any patent or apparent defects to deficiencies in such work that render it unsuitable for such Proper execution and results. The CONTRACTOR's failure to so report shall constitute and acceptance of the work by others as being fit and Proper for integration with work under this Contract, except for latent or non apparent defects and deficiencies in the work.

62. USE OF PREMISES

The CONTRACTOR shall confine his equipment, the storage of materials and the operation of his workers to limits shown on the Drawings or indicated by law, ordinances, permits, or directions of the ENGINEER, and shall not unreasonably encumber the Premises with his materials. The CONTRACTOR shall provide, at his own expense, the necessary rights-of-way and access to the work, which may be required outside the limits of the OWNER's Property and shall furnish the ENGINEER copies of permits and agreements for use of the Property outside that provided by the OWNER.

The CONTRACTOR shall not load nor permit any part of the structure to be loaded in any manner that will endanger the structure, nor shall CONTRACTOR subject any part of the work or adjacent Property to stresses or Pressures that will endanger it.

63. SUBSTANTIAL COMPLETION DATE

The ENGINEER may issue a written notice of substantial completion for the purpose of establishing the starting date for specific equipment guarantees, and to establish the date that the OWNER will assume the responsibility for the cost of operating such equipment. Said notice shall not be considered as final acceptance of any portion of the work or relieve the CONTRACTOR from completing the remaining work within the specified time and in full compliance with the Contract Documents. See SUBSTANTIAL COMPLETION under DEFINITIONS of these General Conditions.

64. PERFORMANCE TESTING

Operating equipment and systems shall be performance tested in the Presence of the ENGINEER to demonstrate compliance with the specified requirements. Performance testing shall be conducted under the specified design operating conditions or under such simulated operating conditions as recommended or approved by the ENGINEER. Schedule such testing with the ENGINEER at least one week in advance of the planned date for testing.

65. OWNER'S USE OF PORTIONS OF THE WORK

Following issuance of the written notice of Substantial Completion, the OWNER may initiate operation of the facility. Such use shall not be considered as final acceptance of any portion of the work, nor shall such use be considered as cause for an extension of the Contract completion time, unless authorized by a Change Order issued by the OWNER.

66. CUTTING AND PATCHING

The CONTRACTOR shall do all cutting, fitting, or patching of his work that may be required to make its several parts come together Properly and fit it to receive or be received by work of other CONTRACTORs shown upon or reasonably implied by the Drawings.

67. CLEANING UP

The CONTRACTOR shall, at all times, keep Property on which work is in Progress and the adjacent Property free from accumulations of waste material or rubbish caused by employees or by the work. Upon completion of the construction, the CONTRACTOR shall remove all temporary structures, rubbish, and waste materials resulting from his operations.

PAYMENT

68. PAYMENT FOR CHANGE ORDERS

The OWNER's request for quotations on alterations to the work shall not be considered authorization to proceed with the work expediting, delivery, and installation of all equipment and materials. Within a reasonable period after the CONTRACTOR submits to the OWNER a written request for an extension of time, the ENGINEER will Present his written opinion to the OWNER as to whether an extension of time is justified, and, if so, his recommendation as to the number of days for time extension. The OWNER will make the final decision on all requests for extension of time.

Prior to the issuance of a formal Change Order, nor shall such request justify any delay in existing work. Quotations for alterations to the work shall include substantiating

documentation with an itemized breakdown of CONTRACTOR and SUBCONTRACTOR costs, including labor, material, rentals, approved services, overhead, and profit. OWNER may require detailed cost data in order to substantiate the reasonableness of the proposed costs.

Any compensation paid in conjunction with the terms of a Change Order shall comprise total compensation due the CONTRACTOR for the work or alteration defined in the Change Order. By signing the Change Order, the CONTRACTOR acknowledges that the stipulated compensation includes payment for the work or alteration plus all payment for the interruption of schedules, extended overhead, delay, or any other impact claim or ripple effect, and by such signing specifically waives any reservation or claim for additional compensation in respect to the subject Change Order.

At the OWNER's option, payment or credit for any alterations covered by a Change Order shall be determined by one or a combination of the methods set forth in A, B, or C below, as applicable:

A. UNIT PRICES

Those unit Prices stipulated in the Proposal shall be utilized where they are applicable. In the event the Change Order results in a change in the original quantity that is materially and significantly different from the original bid quantity, a new unit Price shall be negotiated upon demand of either party. Unit Prices for new items included in the Change Order shall be negotiated and mutually agreed upon.

B. LUMP SUM

A total lump sum for the work negotiated and mutually acceptable to the CONTRACTOR and the OWNER. Lump sum quotations for modifications to the work shall include substantiating documentation with an itemized breakdown of CONTRACTOR and SUBCONTRACTOR costs, including labor, material, rentals, approved services, overhead, and Profit, all calculated as specified under "C" below.

C. COST REIMBURSEMENT WORK

The term "cost reimbursement" shall be understood to mean that payment for the work will be made on a time and expense basis, that is, on an accounting of the CONTRACTOR's forces, materials, equipment, and other items of cost as required and used to do the work.

If the method of payment cannot be agreed upon Prior to the beginning of the work, and the OWNER directs by written Change Order that the work be done on a cost reimbursement basis, then the CONTRACTOR shall furnish labor, and furnish and install equipment and materials necessary to complete the work in a satisfactory manner and within a reasonable period of time. For the work performed, payment will be made for the documented actual cost of the following:

1. Labor including foremen for those hours they are assigned and participating in the cost reimbursement work (actual payroll cost, including wages, fringe benefits as established by negotiated labor agreements, labor insurance, and labor taxes as established by law). No other fixed labor burdens will be considered, unless approved in writing by the OWNER.
2. Material delivered and used on the designated work, including sales tax, if paid by the CONTRACTOR or his SUBCONTRACTOR.
3. Rental or equivalent rental cost of equipment, including necessary transportation for items having a value in excess of $100. Rental or equivalent rental cost will be allowed for only those days or hours during which the equipment is in actual use. Rental and transportation allowances shall not exceed the current rental rates prevailing in the locality. The rentals allowed for equipment will, in all cases, be understood to cover all fuel, supplies, repairs, and renewals, and no further allowances will be made for those items, unless specific agreement to that effect is made.
4. Additional bond, as required and approved by the OWNER.
5. Additional insurance (other than labor insurance) as required and approved by the OWNER.

In addition to items 1 through 5 above, an added fixed fee for general overhead and Profit shall be negotiated and allowed for the CONTRACTOR (or approved SUBCONTRACTOR) actually executing the Cost Reimbursement work.

An additional fixed fee shall be negotiated and allowed the CONTRACTOR for the administrative handling of portions of the work that are executed by an approved SUBCONTRACTOR. No additional fixed fee will be allowed for the administrative handling of work executed by a SUBCONTRACTOR of a SUBCONTRACTOR, unless by written permission from the OWNER.

The added fixed fees shall be considered to be full compensation, covering the cost of general supervision, overhead, Profit, and any other general expense. The CONTRACTOR's records shall make clear distinction between the direct costs of work paid for on a cost reimbursement basis and the costs of other work. The CONTRACTOR shall furnish the ENGINEER report sheets in duplicate of each day's cost reimbursement work no later than the working day following the performance of said work. The daily report sheets shall itemize the materials used, and shall cover the direct cost of labor and the charges for equipment rental, whether furnished by the CONTRACTOR,

SUBCONTRACTOR or other forces. The daily report sheets shall provide names or identifications and classifications of workers, the hourly rate of pay and hours worked, and also the size, type, and identification number of equipment and hours operated.

Material charges shall be substantiated by valid copies of vendors' invoices. Such invoices shall be submitted with the daily report sheets, or, if not available, they shall be submitted with subsequent daily report sheets. Said daily report sheets shall be signed by the CONTRACTOR or his authorized agent.

The OWNER reserves the right to furnish such materials and equipment as he deems expedient and the CONTRACTOR shall have no claim for profit or added fees on the cost of such materials and equipment. To receive partial payments and final payment for cost reimbursement work, the CONTRACTOR shall submit to the ENGINEER, detailed and complete documented verification of the CONTRACTOR's and any of his SUBCONTRACTORS' actual costs involved in the cost reimbursement work. Such costs shall be submitted within 30 days after said work has been performed.

69. PARTIAL PAYMENTS

A. GENERAL

Nothing in this Article shall be construed to affect the right, hereby reserved, to reject the whole or any part of the aforesaid work, should such work be later found not to comply with the Provisions of the Contract Documents. All estimated quantities of work for which partial payments have been made are subject to review and correction on the final estimate. Payment by the OWNER and acceptance by the CONTRACTOR of partial payments based on periodic estimates of quantities of work performed shall not, in any way, constitute acceptance of the estimated quantities used as a basis for computing the amounts of the partial payments.

B. ESTIMATE

At least 30 days before each Progress payment falls due, as specified in the Supplementary Conditions, the CONTRACTOR shall submit to the ENGINEER a detailed estimate of the amount earned during the Preceding month for the separate portions of the work, and request payment. As used in this Article, the words "amount earned" means the value, on the date of the estimate for partial payment, of the work completed in accordance with the Contract Documents, and the value of approved materials delivered to the Project site suitable stored and Protected Prior to incorporation into the work.

ENGINEER will, within 7 days after receipt of each request for payment, either indicate in writing a recommendation of payment and present the request to OWNER, or return the request to CONTRACTOR indicating in writing ENGINEER's reasons for refusing to recommend payment. In the latter case, CONTRACTOR may, within 7 days, make the necessary corrections and resubmit the request.

ENGINEER may refuse to recommend the whole or any part of any payment if, in his opinion, it would be incorrect to make such representations to OWNER. ENGINEER may also refuse to recommend any such payment, or, because of subsequently discovered evidence or the results of subsequent inspections or tests, nullify any such payment previously recommended to such an extent as may be necessary in ENGINEER's opinion to protect the OWNER from loss because:

1. The work is defective, or completed work has been damaged requiring correction or replacement;

2. Written claims have been made against OWNER or Liens have been filed in connection with the work;

3. The Contract Price has been reduced because of Change Orders;

4. OWNER has been required to correct defective work or complete the work in accordance with Article OWNER'S RIGHT TO DO WORK;

5. Of CONTRACTOR's unsatisfactory Prosecution of the work in accordance with the Contract Documents; or

6. CONTRACTOR's failure to make payment to SUBCONTRACTORS or for labor, materials, or equipment.

C. DEDUCTION FROM ESTIMATE

Unless modified in the Supplementary Conditions, deductions from the estimate will be as described below:

1. The OWNER will deduct from the estimate, and retain as part security, 10 percent of the amount earned for work satisfactorily completed. A deduction and retainage of 10 percent will be made on the estimated amount earned for approved items of material delivered to and properly stored at the jobsite but not incorporated into the work. When the work is 50 percent complete, the OWNER may reduce the retainage to 5 percent of the dollar value of all work satisfactorily completed to date provided the CONTRACTOR is making satisfactory progress and there is no specific cause for a greater retainage. The OWNER may reinstate the retainage up to 10 percent if the OWNER determines, at his discretion,

that the CONTRACTOR is not making satisfactory progress or where there is other specific cause for such withholding.

D. QUALIFICATION FOR PARTIAL PAYMENT FOR MATERIALS DELIVERED

Unless modified in the Supplementary Conditions, qualification for partial payment for materials delivered but not yet incorporated into the work shall be as described below:

1. Materials, as used herein, shall be considered to be those items which are fabricated and manufactured material and equipment. No consideration shall be given to individual purchases of less than $200 for any one item.

2. To receive partial payment for materials delivered to the site, but not incorporated in the work, it shall be necessary for the CONTRACTOR to include a list of such materials on the Partial Payment Request. At his sole discretion, the ENGINEER may approve items for which partial payment is to be made. Partial payment shall be based on the CONTRACTOR's actual cost for the materials as evidenced by invoices from the supplier. Proper storage and Protection shall be provided by the CONTRACTOR, and as approved by the ENGINEER. Final payment shall be made only for materials actually incorporated in the work and, upon acceptance of the work, all materials remaining for which advance payments had been made shall revert to the CONTRACTOR, unless otherwise agreed, and partial payments made for these items shall be deducted from the final payment for the work.

3. CONTRACTOR warrants and guarantees that title to all work, materials, and equipment covered by any Application for Payment, whether incorporated in the Project or not, will pass to OWNER at the time of payment free and clear of all liens, claims, security interests, and encumbrances.

4. If requested by the ENGINEER, the CONTRACTOR shall provide, with subsequent pay requests, invoices receipted by the supplier showing payment in full has been made.

E. PAYMENT

After deducting the retainage and the amount of all previous partial payments made to the CONTRACTOR from the amount earned, the amount due will be made payable to the CONTRACTOR. Recommendations for payment received by the OWNER less than 9 days Prior to the scheduled day for payment will not be Processed or paid until the following month.

70. CLAIMS FOR EXTRA WORK

In any case where the CONTRACTOR deems additional time or compensation will become due him under this Contract for circumstances other than those defined in Article DELAYS AND EXTENSION OF TIME, the CONTRACTOR shall notify the ENGINEER, in writing, of his intention to make claim for such time or compensation before he begins the work on which he bases the claim, in order that such matters may be settled, if possible, or other appropriate action taken. The notice of claim shall be in duplicate, in writing, and shall state the circumstances and the reasons for the claim, but need not state the amount. If such notification is not given or if the ENGINEER is not afforded proper facilities by the CONTRACTOR for keeping strict account of actual cost, then the CONTRACTOR hereby agrees to waive the claim for such additional time or compensation. Such notice by the CONTRACTOR, and fact that the ENGINEER has kept account of the cost as aforesaid, shall not in any way be construed as proving the validity of the claim.

No extension of time will be granted to the CONTRACTOR for delays resulting from extra work that have no measurable impact on the completion of the total work under this Contract. Claims for additional time or compensation shall be made in itemized detail and submitted, in writing, to the OWNER and ENGINEER within 10 days following completion of that portion of the work for which the CONTRACTOR bases his claim. Failure to make the claim for additional compensation in the manner and within the time specified above shall constitute waiver of that claim. In case the claim is found to be just, it shall be allowed and paid for as provided in Article PAYMENT FOR CHANGE ORDERS.

71. RELEASE OF LIENS OR CLAIMS

The CONTRACTOR shall indemnify and hold harmless the OWNER from all claims for labor and materials furnished under this Contract. Prior to the final payment, the CONTRACTOR shall furnish to the OWNER, as part of his final payment request, a certification that all of the CONTRACTOR's obligations on the project have been satisfied and that all monetary claims and indebtedness have been paid. The CONTRACTOR shall furnish complete and legal effective releases or waivers, satisfactory to the OWNER, of all liens arising out of or filed in connection with the work.

72. FINAL PAYMENT

Upon completion of all the work under this Contract, the CONTRACTOR shall notify the ENGINEER, in writing, that he has completed his part of the Contract and shall request final payment. Upon receipt of such notice the ENGINEER

will inspect and, if acceptable, submit to the OWNER his recommendation as to acceptance of the completed work and as to the final estimate of the amount due the CONTRACTOR. Upon approval of this final estimate by the OWNER and compliance by the CONTRACTOR with Provisions in Article **RELEASE OF LIENS OR CLAIMS,** and other Provisions as may be applicable, the OWNER shall pay to the CONTRACTOR all monies due him under the Provisions of these Contract Documents.

73. NO WAIVER OF RIGHTS

Neither the inspection by the OWNER, through the ENGINEER or any of his employees, nor any order by the OWNER for payment of money, nor any payment for, or acceptance of, the whole or any part of the work by the OWNER or ENGINEER, nor any extension of time, nor any possession taken by the OWNER or its employees, shall operate as a waiver of any Provision of this Contract, or any power herein reserved to the OWNER, or any right to damages herein Provided, nor shall any waiver of any breach in this Contract be held to be a waiver of any other or subsequent breach. Acceptance or final payment shall not be final and conclusive with regards to latent defects, fraud, or such gross mistakes as may amount to fraud, or as regards the OWNER's rights under the warranty.

74. ACCEPTANCE OF FINAL PAYMENT CONSTITUTES RELEASE

The acceptance by the CONTRACTOR of the final payment shall release the OWNER and the ENGINEER, as representatives of the OWNER, from all claims and all liability to the CONTRACTOR for all things done or furnished in connection with the work, and every act of the OWNER and others relating to or arising out of the work except claims Previously made in writing and still unsettled. No payment, however, final or otherwise, shall operate to release the CONTRACTOR or his Sureties from obligations under this Contract and the Performance Bond, Payment Bond, and other bonds and warranties, as herein provided.

SUPPLEMENTARY CONDITIONS

The General Conditions are hereby revised as follows:

ARTICLE 9 "ENGINEER"

Delete Article "ENGINEER" in its entirety and substitute the following:

The person or organization identified as such in the Contract Documents. The Term "ENGINEER" means ARCHITECT or his authorized representative.

ARTICLE 34 "INSURANCE & LIABILITY"

Delete Article 34 "INSURANCE & LIABILITY" (A), (B), (C), and (D) in their entirety and substitute the following:

Contractor shall maintain limits no less than those stated below:

CONTRACTOR is to secure, pay for, and file with the City of Key West, prior to commencing any work under the Contract, all certificates for workers' compensation, public liability, and property damage liability insurance, and such other insurance coverages as may be required by specifications and addenda thereto, in at least the following minimum amounts with specification amounts to prevail if greater than minimum amounts indicated. Notwithstanding any other provision of the Contract, the CONTRACTOR shall provide the minimum limits of liability insurance coverage as follows:

Auto Liability	$1,000,000	Combined Single Limit
General Liability	$2,000,000	Aggregate (Per Project)
	$2,000,000	Products Aggregate
	$1,000,000	Any One Occurrence
	$1,000,000	Personal Injury
	$ 300,000	Fire Damage/Legal
Additional Umbrella Liability	$2,000,000	Occurrence / Aggregate

CONTRACTOR shall furnish an original Certificate of Insurance indicating, and such policy providing coverage to, City of Key West named as an additional insured on a PRIMARY and NON CONTRIBUTORY basis utilizing an ISO standard endorsement at least as broad as CG 2010 (11/85) or its equivalent, (combination of CG 20 10 07 04 and CG 20 37 07 04, providing coverage for completed operations, is acceptable) including a waiver of subrogation clause in favor of City of Key West on all policies. CONTRACTOR will maintain the General Liability and Umbrella Liability insurance coverages summarized above with coverage continuing in full force including the additional insured endorsement until at least 3 years beyond completion and delivery of the work contracted herein.

Notwithstanding any other provision of the Contract, the CONTRACTOR shall maintain complete workers' compensation coverage for each and every employee, principal, officer,

representative, or agent of the CONTRACTOR who is performing any labor, services, or material under the Contract. Further, CONTRACTOR shall additionally maintain the following minimum limits of coverage:

Bodily Injury Each Accident	$1,000,000
Bodily Injury by Disease Each Employee	$1,000,000
Bodily Injury by Disease Policy Limit	$1,000,000

If the work is being done on or near a navigable waterway, CONTRACTOR's workers compensation policy shall be endorsed to provide USL&H Act (WC 00 01 06 A) and Jones Act (WC 00 02 01 A) coverage if specified by the City of Key West. CONTRACTOR shall provide the City of Key West with a Certificate of Insurance verifying compliance with the workman's compensation coverage as set forth herein and shall provide as often as required by the City of Key West such certification which shall also show the insurance company, policy number, effective and expiration date, and the limits of workman's compensation coverage under each policy.

CONTRACTOR's insurance policies shall be endorsed to give 30 days written notice to the City of Key West in the event of cancellation or material change, using form CG 02 24, or its equivalent.

Certificates of Insurance submitted to the City of Key West will not be accepted without copies of the endorsements being requested. This includes additional insured endorsements, cancellation/material change notice endorsements, and waivers of subrogation. Copies of USL&H Act and Jones Act endorsements will also be required if necessary. PLEASE ADVISE YOUR INSURANCE AGENT ACCORDINGLY.

CONTRACTOR will comply with any and all safety regulations required by any agency or regulatory body including but not limited to OSHA. CONTRACTOR will notify City of Key West immediately by telephone at (305) 809-3963 any accident or injury to anyone that occurs on the jobsite and is related to any of the work being performed by the CONTRACTOR.

Add the following Article:

G. SURETY AND INSURER QUALIFICATIONS

All bonds, insurance contracts, and certificates of insurance shall be either executed by or countersigned by a licensed resident agent of the Surety or insurance company, having his place of business in the State of Florida, and in all ways complying with the insurance laws of the State of Florida. Further, the said Surety or Insurance Company shall be duly licensed and qualified to do business in the State of Florida. If requested, Contractor shall Provide Proof of Florida Licensure for all insurance companies. The City of Key West shall be named as Additional Insured on the insurance certificates.

ARTICLE 35 "INDEMNITY"

Delete Article 35 "INDEMNITY" in its entirety and substitute the following:

INDEMNITY

To the fullest extent permitted by law, the CONTRACTOR expressly agrees to indemnify and hold harmless the City of Key West, their officers, directors, agents, and employees (herein called the "indemnitees") from liabilities, damages, losses and costs, including, but not limited to, reasonable attorney's fees and court costs, such legal expenses to include costs incurred in establishing the indemnification and other rights agreed to in this Paragraph, to persons or property, to the extent caused by the negligence, recklessness, or intentional wrongful misconduct of the CONTRACTOR, its Subcontractors or persons employed or utilized by them in the performance of the Contract. Claims by indemnitees for indemnification shall be limited to the amount of CONTRACTOR's insurance or $1 million per occurrence, whichever is greater. The parties acknowledge that the amount of the indemnity required hereunder bears a reasonable commercial relationship to the Contract and it is part of the project specifications or the bid documents, if any.

The indemnification obligations under the Contract shall not be restricted in any way by any limitation on the amount or type of damages, compensation, or benefits payable by or for the CONTRACTOR under workers' compensation acts, disability benefits acts, or other employee benefits acts, and shall extend to and include any actions brought by or in the name of any employee of the CONTRACTOR or of any third party to whom CONTRACTOR may subcontract a part or all of the Work. This indemnification shall continue beyond the date of completion of the work.

ARTICLE 39 "CODES, ORDINANCES, PERMITS, AND LICENSES"

Add the following:

A. PERMIT FOR WORK WITHIN LOCAL RIGHTS-OF-WAY

The Contractor shall obtain from the City of Key West the necessary permits for work within the rights-of-way. The Contractor shall abide by all regulations and conditions, including maintenance of traffic.

B. NOISE ORDINANCE

City of Key West has a noise ordinance that allows working hours between 8:00 AM to 7:00 PM, Monday through Friday. No work should be performed during weekends or City Holidays, State Holidays and National Holidays. Any construction operations outside these hours and these days will require a variance from the City of Key West Commission.

D. "LICENSES"

THE BIDDER MUST BE A LICENSED CONTRACTOR BY THE STATE OF FLORIDA AND SUBMIT PROOF OF SUCH WITH THE BID.

1. Within 10 days of Notice of Award, the successful Bidder must represent that he holds all applicable, county, and City of Key West licenses and permits required to do business as a contractor with respect to the work described in the Contract Documents.

2. Further, the successful Bidder must, within 10 days of Notice of Award, furnish documentation showing that, as a minimum, he has complied with the provisions of Chapter 18 of the Code of Ordinances of the City of Key West in order to enter into the Agreement contained in the Contract Documents.

3. Specifically, within 10 days after Notice of Award, the successful Bidder must demonstrate that he holds, as a minimum, the following licenses and certificates:

   a.) City of Key West Tax License Receipt;
   b.) A valid Certificate of Competency issued by the Chief Building Official of Key West, Florida
   c.) A valid occupational license issued by the City of Key West, Florida.

E. WORK DURING HOLIDAYS

There shall be no work during City Holidays, State Holidays and National Holidays. Any construction operations during these days shall be approved by the City of Key West.

ARTICLE 42 "SAFETY"

Add the following sub article:

OCCUPATIONAL SAFETY AND HEALTH

The Contractor shall observe and comply with all applicable local, state, and federal occupational safety and health regulations during the prosecution of work under this Contract. In addition, full compliance by the Contractor with the U.S. Department of Labor's Occupational Safety and Health Standards, as established in Public Law 91-596, will be required under the terms of this Contract.

ARTICLE 43 "PROTECTION OF WORK AND PROPERTY"

Add the following Article:

HISTORIC PRESERVATION

The Contractor shall comply with Florida's Archives and Historic Act (Florida Statutes, Chapter 267) and the regulations of the local historic

preservation board as applicable and protect against the potential loss or destruction of significant historical or archaeological data, sites, and properties in connection with the project.

ARTICLE 57 “OWNERS RIGHT TO TRANSFER EMPLOYMENT”

Add the following Article:

TERMINATION FOR CONVENIENCE AND RIGHT OF SUSPENSION

A. Owner shall have the right to terminate this Contract without cause by written notice of Termination to the Contractor. In the event of such termination for convenience, the Contractor’s recovery against the Owner shall be limited to that portion of the Contract amount earned through the date of termination, together with any retainage withheld and reasonable termination expenses incurred. Contractor shall not be entitled to any other or further recovery against the Owner, including, but not limited to, damages or any anticipated profit on portions of the Work not performed.

B. The Owner shall have the right to suspend all or any portions of the Work upon giving the Contractor prior written notice of such suspension. If all or any portion of the Work is so suspended, the Contractor shall be entitled to reasonable costs, expenses and time extension associated with the suspension.

ARTICLE 60 "LIQUIDATED DAMAGES"

Delete Article "LIQUIDATED DAMAGES" in its entirety and substitute the following:
LIQUIDATED DAMAGES

Should the Contractor fail to complete the work or any part thereof in the time agreed upon in the Contract Documents or within such extra time as may have been allowed for delays by extensions granted as provided in the Contract, the Contractor shall reimburse the Owner for the additional expense and damage for each calendar day, Sundays and legal holidays included, that project outlined in Contract Documents remains uncompleted after the completion date. Liquidated damages shall be assessed. It is agreed that the amount of such additional expense and damage incurred by reason of failure to complete the work is the per diem rate as stipulated in the Proposal. The said amount is hereby agreed upon as a reasonable estimate of the costs which may be accrued by the Owner after the expiration of the time of completion. It is expressly understood and agreed that this amount is not to be considered in the nature of a penalty but as liquidated damages, which have accrued against the

Contractor. The Owner shall have the right to deduct such damages from any amount due or that may become due the Contractor or the amount of such damages shall be due and collectible from the Contractor or Surety.

ARTICLE 69 "PARTIAL PAYMENTS"

Delete the first paragraph of Article "PARTIAL PAYMENTS" and substitute the following:

No more than once each month the Contractor shall submit to the Engineer a detailed estimate of the amount earned during the preceding month for the separate portions of the work and request payment. As used in this Article the words "amount earned" means the value, on the date of the estimate, for partial payment of the work completed in accordance with the Contract Documents and the value of approved materials delivered to the project site suitably stored and protected prior to incorporation into the work.

ARTICLE 69 "PARTIAL PAYMENTS"

Add the following:

Payment will be made by the Owner to the Contractor within 40 days receipt of the written recommendation of payment from the Engineer.

ARTICLE 69 “PARTIAL PAYMENTS”

Delete Subarticle C “DEDUCTION FROM ESTIMATE” in its entirety and substitute the following:

DEDUCTION FROM ESTIMATE

The OWNER will deduct from the estimate, and retain as part security, 10 percent of the amount earned for work satisfactorily completed. A deduction and retainage of 10 percent will be made on the estimated amount earned for approved items of material delivered to and properly stored at the jobsite but not incorporated into the work. When the work is 90 percent complete, the OWNER may reduce the retainage to 5 percent of the dollar value of all work satisfactorily completed to date provided the CONTRACTOR is making satisfactory progress and there is no specific cause for a greater retainage. The OWNER may reinstate the retainage up to 10 percent if the OWNER determines, at his discretion, that the CONTRACTOR is not making satisfactory progress or where there is other specific cause for such withholding.

ARTICLE 69 "PARTIAL PAYMENTS"

Delete Subarticle E "PAYMENT" in its entirety and substitute the following:

PAYMENT

After deducting the retainage and the amount of all previous partial payments made to the Contractor from the amount earned the amount due will be made payable to the Contractor. Recommendations for payment received by the Owner less than 40 days prior to the scheduled day for payment will not be processed or paid until the following month.

The OWNER will withhold progress payments until the Contractor has satisfied the above conditions.

ARTICLE 72 "FINAL PAYMENT"

Delete Article "FINAL PAYMENT" in its entirety and substitute the following:

FINAL PAYMENT

Upon completion of the work the Contractor shall notify the Engineer, in writing, that he has completed it and shall request final payment. The Contractor shall be responsible for keeping an accurate and detailed record of his actual construction. Upon completion of construction and before final acceptance and payment the Contractor shall furnish the Engineer as-built drawings of his construction. Upon receipt of a request for final payment and the as-built drawings the Engineer will inspect and, if acceptable, submit to the Owner his recommendation as to acceptance of the completed work and as to the final estimate of the amount due the Contractor. Upon approval of this final estimate by the Owner and compliance by the Contractor with provisions in Article RELEASE OF LIENS OR CLAIMS, and other provisions as may be applicable, the Owner shall pay to the Contractor all monies due him under the provisions of these Contract Documents.

ARTICLE 72 "FINAL PAYMENT"

Add the following;

A. Acceptance and Final Payment.

Whenever the Contractor has completely performed the work provided for under the Contract and the Engineer has performed a final inspection and made final acceptance and subject to the terms of the Engineer will prepare a final estimate showing the value of the work as soon as the Engineer makes the necessary measurements and computations. The Engineer will correct all prior estimates and payments in the final estimate and payment. The OWNER will pay the estimate, less any sums that the OWNER may have deducted or retained under the provisions of the Contract, as soon as practicable after

final acceptance of the work, provided the Contractor has met the requirements of (1) through (8) below.

1 The Contractor has agreed in writing to accept the balance due or refund the overpayment, as determined by the OWNER, as full settlement of his account under the Contract and of all claims in connection therewith, or the Contractor, accepted the balance due or refunded the overpayment, as determined by the OWNER, with the stipulation that his acceptance of such payment or the making of such refund does not constitute any bar, admission, or estoppel, or have any effect as to those payments in dispute or the subject of a pending claim between the Contractor and the OWNER. To receive payment based on a FINAL PAYMENT CERTIIFCATE, The Contractor further agrees, by submitting a FINAL PAYMENT CERTIFICATE that any pending or future arbitration claim or suit is limited to those particulars, including the itemized amounts, defined in the original FINAL PAYMENT CERTIFICATE , and that he will commence with any such arbitration claim or suit within 15 calendar days from and after the time of final PAYMENT of the work and that his failure to file a formal claim within this period constitutes his full acceptance of the Engineer's final estimate and payment. The overpayment refund check from the Contractor, if required, will be considered a part of any Acceptance Letter executed.

2 The Contractor has properly maintained the project, as specified hereinbefore.

3 The Contractor has furnished a sworn affidavit to the effect that the Contractor has paid all bills and no suits are pending (other than those exceptions listed, if any) in connection with work performed under the Contract and that the Contractor has not offered or made any gift or gratuity to, or made any financial transaction of any nature with, any employee of the OWNER in the performance of the Contract.

4 The surety on the contract bond consents, by completion of their portion of the affidavit and surety release subsequent to the Contractor's completion of his portion, to final payment to the Contractor and agrees that the making of such payment does not relieve the surety of any of its obligations under the bond.

5 The Contractor has furnished all required mill tests and analysis reports to the Engineer.

6 The Contractor has furnished as-built drawings in AutoCad and Adobe PDF, in accordance with all supplied data collections and files to be compatible with Esri ArcGIS 10.2.2 Software. The current computing environment consists of:

- Microsoft SQL Server
- Windows 7/Server 2008
- ESRI GIS Platform

Interfaces and Integrations

The City of Key West uses a number of software applications critical to its core operation and mission. The proposed mobile asset data collection solution will need to interface or integrate with these existing platforms.

- Arc Collector
-ArcGIS Online
- ArcMap 10.2

If there are any questions or concerns on whether your files meet this request. Please contact the Nicholas Osterhoudt, City of Key West GIS department. 305-809-3721.

* * * * * *

PART 4

SCOPE OF WORK

SCOPE OF WORK

PART 1 - SCOPE OF WORK

1.1 DESCRIPTION

A. Work Included: The design and furnishing of all materials, equipment and labor for the construction of CEMETERY SEXTON'S HOUSE and all necessary appurtenances and record drawings, surveys, and incidental work to provide a complete and serviceable project identified as:

CE 1002 / CEMETERY SEXTON'S HOUSE

B. Related requirements in other parts of the Contract Documents: General and Supplementary Conditions of the Contract for Construction.

C. Contractor's Duties:

1. In addition to provisions stipulated in other portions of the Contract Documents, the Contractor shall:

   a. Secure permits as necessary for proper execution and completion of the work.

   b. Notify (in writing) all residents and proprietors adjacent to construction site of work to be performed, more specifically the notice shall state the day and time construction will begin, hours of work, the name and phone number of the Contractor's Superintendent and an end date for the project.

D. The Contractor shall be totally responsible for all permits required and shall ensure that construction complies with all applicable local, state, and federal codes.

E. The Contractor shall provide an experienced, qualified, and competent Superintendent to oversee the Work and perform quality assurance inspections. Prior to starting construction, the proposed Superintendent's qualifications shall be submitted in writing to the City for approval. The approved Superintendent shall be expected to remain for the duration of the Project, unless the City or Engineer deem him/her inadequate and requests his/her removal or the Contractor cannot continue his services to the Project for a reason or reasons that shall be communicated in writing to the City.

F. A replacement Superintendent shall be required to follow the same approval process as required for the original. The Superintendent shall provide to the City Inspector Construction Reports for each day of construction, the reports shall be in English, legible, and signed. Contractor shall provide PDF copies monthly. Reports shall include quantity control checks done daily.

G. It shall be the Contractor's responsibility to request approval for entrance to the site for work on Saturdays, Sundays, holiday, and weekday hours other than 7:00 AM until 7:00 PM. No construction can commence before 8:00 AM on weekdays.

H. The Contractor shall provide material safety data sheets (2 copies) for chemicals, paints, coatings and materials used on-site prior to initiation of work.

1.2 CONTRACTOR'S USE OF PREMISES

A. Work shall be scheduled as to not interfere with on-going area activities.

B. Coordinate use of premises and requirements for security under direction of City.

C. This is a smoke free construction zone. **NO SMOKING PERMITED WITHIN CONSTRUCTION ZONE.**

D. Assume full responsibility for the protection and safekeeping of products, under this Contract, stored on the site.

E. Obtain and pay for the use of additional storage or work areas needed for operation.

F. Contractor shall provide drinking water and toilet facilities for construction personnel; The City will not provide.

G. Contractor to take precautions not to disturb existing grave sites. GRAVE SITES are located directly adjacent to construction site.

1.3 MAINTENANCE OF EXISTING UTILITIES OPERATION

A. Provide at least three weeks notice prior to interruption of utility services for temporary or permanent connections.

B. Keep interruption of utility services, and utility outages during disconnection, moving, and reconnection to a minimum.

C. Keys Energy shall be notified two weeks in advance in writing by the contractor for any KEYS support equipment required by the Contractor during any excavation. (e.g., Power poles next to excavations requiring support, etc.) No additional payment will be paid for this coordination.

****

PART 5

SPECIFICATIONS AND DRAWINGS

SPECIFICATIONS

CITY SEXTON'S HOUSE

701 Passover Lane
Key West, Florida

Michael Miller Architect
517 Duval Street
Second Floor
Key West, FL 33040
Ph (305) 294-7687
Fx (305) 294-3524

Date: January 15, 2014
Revised:3-25-14
Revised: 5-22-14
Revised: 1-14-15 CKW
Revised: 2-19-15 CKW

PROJECT NO. 1207

TABLE OF CONTENTS

DIVISION 1 GENERAL REQUIREMENTS 73

DIVISION 2A DEMOLITION (N.I.C. – PERFORMED BY OWNER) 81

DIVISION 2B SITE PREPARATION 82

DIVISION 2C SITE IMPROVEMENTS 84

DIVISION 3 CONCRETE 85

DIVISION 4A CONCRETE MASONRY UNITS 87

DIVISION 4B PRECAST CONCRETE WINDOW SILLS 88

DIVISION 4C MARBLE INTERIOR WINDOW SILLS 90

DIVISION 5 STRUCTURAL STEEL AND MISCELLANEOUS IRON 92

DIVISION 6A PRE-ENGINEERED TRUSSES 93

DIVISION 6B ROUGH CARPENTRY 99

DIVISION 6C FINISH CARPENTRY 100

DIVISION 6D MOLDINGS 101

DIVISION 6E PREFABRICATED COLUMNS 104

DIVISION 6F CASEWORK (BASE BID) 106

DIVISION 6G CASEWORK (ALTERNATE NO. 3) 110

DIVISION 7A METAL V-CRIMP ROOF (BASE BID) 114

DIVISION 7B METAL SHINGLE ROOF (ALTERNATE NO. 1) 116

DIVISION 7C CAULKING AND SEALANTS 120

DIVISION 7D BUILDING INSULATION 122

DIVISION 8A FRONT DOOR AND TRANSOM (BASE BID) 124

DIVISION 8B IMPACT FRONT DOOR AND TRANSOM (ALTERNATE NO. 4) **126**

DIVISION 8C INTERIOR WOOD DOORS AND FRAMES **127**

DIVISION 8D HOLLOW METAL DOORS **128**

DIVISION 8E FINISH HARDWARE **132**

DIVISION 8F WINDOWS **138**

DIVISION 8G IMPACT STORM PANELS **139**

DIVISION 9A PAINT **140**

DIVISION 9B GYPSUM WALLBOARD **145**

DIVISION 9C STUCCO **147**

DIVISION 9D VINYL FLOORING **149**

DIVISION 9E FLOORING – Not Used **150**

DIVISION 9F MARBLE TILE FLOOR **150**

DIVISION 9G HEART PINE FLOOR (ALTERNATE NO. 2) **152**

DIVISION 10A BATHROOM ACCESSORIES **156**

DIVISION 10B FRONT PORCH DOOR MAT **157**

DIVISION 11 EQUIPMENT--Not Used **158**

DIVISION 12 BICYCLE RACKS **158**

DIVISION 13 SPECIAL CONSTRUCTION—Not Used **159**

DIVISION 14 CONVEYING SYSTEMS—Not Used **159**

DIVISION 15A PLUMBING **159**

DIVISION 15B HEATING VENTILATION AND AIR CONDITIONING **161**

DIVISION 16 ELECTRICAL **165**

DIVISION 1: GENERAL REQUIREMENTS

1. SCOPE OF WORK: The work consists of constructing a new Key West Sexton's House at the Key West Cemetery.

2. ALTERNATES: The following alternates shall be bid on. Where indicated, see drawings and specifications under the appropriate section for specific requirements.

   a. **NO. 1: FURNISH AND INSTALL METAL SHINGLE ROOF IN LIEU OF METAL V-CRIMP ROOF.** See Division 7B METAL SHINGLE ROOF, Sheet A3.

   b. **NO. 2: FURNISH AND INSTALL WOOD FLOORING INCLUDING SLAB BLOCK OUT IN FAMILY ROOM (ROOM NO. 3) IN LIEU OF VINYL TILE.** See Division 9 G HEART PINE FLOOR, Sheet A5.

   c. **NO. 3: FURNISH AND INSTALL CABINETRY IN STOREROOM (ROOM NO. 6) IN LIEU OF CABINETRY AND ADJUSTABLE SHELVING.** See Division 6G CASEWORK, Sheet A8.

   d. **NO. 4: FURNISH AND INSTALL MAHOGANY IMPACT DOOR AND TRANSOM (MK NO.1) IN LIEU OF WHITE OAK DOOR AND TRANSOM AND STORM PANEL.** See Division 8B IMPACT FRONT DOOR, Sheets A2 and A7.

   e. **NO. 5: FURNISH AND INSTALL AIR HANDLING UNIT IN ATTIC SPACE ABOVE MAINTENANCE (ROOM NO. 9) AND SHIFTING COMMUNICATIONS (ROOM NO. 11) IN LIEU OF INSTALLING AIR HANDLING UNIT IN A/C CLOSET (ROOM NO. 10).** See Division 15B HEATING, VENTILATION, AND AIR CONDITIONING, Sheets A1, S2, E1, M1, and P1.

   f. **NO. 6: DELETE ALL EXTERIOR MOLDINGS AND RELATED WOOD BLOCKING/CFB, WATER TABLE, STUCCO BUILDING BASE, 1" VENT WITH INSECT SCREEN, MOCK-UP SECTION, AND ADJUST BASE BID FACIA HEIGHT AND SOFFIT WIDTH ALONG WITH INSTALLING ACCEPTABLE PRE-MANUFACTURED VENTS AT 10' O.C. SPACING.**

   g. **NO 7: FURNISH AND INSTALL A MK "C" WINDOW WITH RELATED ADJUSTMENTS TO WALL CONSTRUCTION IN LIEU OF CONSTRUCTING BAY IN OFFICE (ROOM NO. 4).**

   h. **NO. 8: FURNISH AND INSTALL CELLULAR PVC EXTERIOR WINDOW SILLS IN LIEU OF PRECAST CONCRETE WINDOW SILLS.**

   i. **NO. 9: FURNISH AND INSTALL CELLULAR PVC INTERIOR WINDOW SILLS IN LIEU OF MARBLE WINDOW SILLS.**

   j. **NO. 10: CONSTRUCT ADA RAMP WITH ANCILLARY ITEMS TO FRONT DOOR PORCH IN LIEU OF CONSTRUCTING ALL EDGE WALLS WITH PIERS AND SWALE A.** See Addendum 1 – Sheet 1

3. OWNER: The Owner shall be the City of Key West.

4. OWNER'S REPRESENTATIVE: The City of Key West shall appoint a project representative to be called the Owner's Representative. All communication to and from the General Contractor shall flow to and from the Owner's Representative. All communication to and from the General Contractor from any other source, unless approved in writing by the Owner's Representative shall be deemed improper and may be discarded. The Contractor shall bear all costs connected to removing work undertaken at the instruction of someone other than the Owner's Representative unless that person is authorized in writing by the Owner's representative.

5. ARCHITECT: The Owner's Representative shall set the parameters for the contractor to communicate with the Architect, Michael Miller Architects Inc, but in no case may the contractor propose or make changes to the design, structural or aesthetic without the architect's written approval either by change order or letter.

6. CONTRACTOR: Wherever the term, "Contractor", or, "contractor", it shall mean the General Contractor. Contractor shall be currently licensed in the state of Florida.

7. PRE-BID CONFERENCE: A pre-bid conference will be held at a date determined by the Owner's representative.

8. CONSTRUCTION SCHEDULE: The contractor shall submit to the owner, as a condition of his bid being considered a bar graph corresponding to his schedule of values indicating by week his proposed construction schedule. This schedule shall be updated and submitted with his applications for payment during the course of the job. Failure to keep his schedule updated will delay payment.

9. SCHEDULE OF VALUES: The General Contractor shall submit a schedule of values with his bid for the Owner's Representative's approval. It shall be broken down by Technical Specifications Divisions included in the Base Bid and it shall be used as a basis for payments to be submitted with each pay application.

10. APPROVAL OF SUBCONTRACTORS: The Owner, through his representative reserves the right to approve all subcontractors hired by the General Contractor. The General Contractor is to submit a list of the subcontractors he proposes to use with his bid, or as an attachment to his contract to the Owner's Representative. If the General Contractor wishes to change subcontractors after commencing the work he must submit the name of the contractor to the Owner's Representative for approval. Acceptance by the Owner's Representative does not absolve the General Contractor of the subcontractor's performance.

11. BUILDING PERMITS: The Contractor and his subcontractors shall be responsible for procuring all necessary construction permits. The Owner shall pay all permit and impact fees.

12. BUILDING CODES: All work shall be in conformity with the Florida Building Code, 2010 Edition, and with all applicable laws, codes, and ordinances of the State of Florida, Monroe County, and the City of Key West.

13. CITY BUILDING DEPARTMENT REQUIREMENTS

a. Construction shall not commence until the contractor has received a building permit.

b. The General Contractor shall make timely requests for inspections and shall endeavor to establish a cooperative and productive relationship with city building inspectors.

c. The General Contractor shall furnish Notice of Acceptance (NOA)s or Florida Product Approval (FPA)s on all building exterior construction components i.e. roofing, doors, and windows, etc.

14. BUILDING INSPECTOR'S INTERPRETATION OF THE BUILDING CODE

a. The Building Inspector's interpretation of the building code shall govern the work unless it is at conflict with the construction documents. If a situation arises where the Building Inspector's interpretation of the Building code conflicts with the construction documents the General Contractor shall stop work on the issue in question and immediately contact the Owner's Representative, who will then confer with the Architect and City Building Official in order to resolve the conflict. If the General Contractor undertakes the building official's order without the Owner's Representative approval he may be held liable to remove the work at his expense.

15. SURVEYS AND ELEVATION CERTIFICATES: The Owner shall be responsible for all surveys prior to signing the construction contract. After commencement of work the contractor shall be responsible for the elevation certificates required in fulfillment of city requirements for certificate of occupancy.

16. CONTRACT LIMIT LINE: See drawings C1 for contract limit lines. Where the contract limit line is along the public right-of-way the General Contract shall erect a chain link barrier fence. Within the cemetery erect barricades along contract limit line.

17. STAGING AREAS: The contractor shall use only the areas indicated on the drawings for storage of materials, equipment, spoils, toilet, dumpster, vehicles, etc. All areas within the existing house to remain may be used by the contractor but must be restored and finished by the completion of the job.

18. ARCHEOLOGICAL CONSIDERATIONS: The site is part of an historic burial ground and may or may not have important artifacts below the existing house. Thus, before commencing on the foundations or any other work requiring excavation the General Contractor must hold a preconstruction meeting with subcontractor(s) performing excavations and contact Diane E. Silvia, Ph.D., Executive Director, Historic Florida Keys Foundation, Old City Hall, 510 Green Street, Key West, FL 33040, Phone (305) 292-6718 and the Owner's representative for scheduling observing excavation operations to deal with any unearthing of artifacts. If during construction an artifact is unearthed the work in the affected area shall cease immediately and the Owner's representative notified. Work may not again commence until approved by the Owner's representative.

19. ACCESS FOR FUNERALS: The City shall give the General Contractor a minimum of three (3) working days notice of a funeral and the General Contractor shall relocate all equipment, materials, spoils, barricades and other items under his control that the Sexton deems an impediment to his conducting the funeral in his customary manner. All such equipment, materials, barricades and like items necessary for meeting the contract for construction must be returned to their proper place in a timely manner by the General Contractor.

20. SAFETY: Contractor shall provide for the safety, prevention of injury, and loss of property at the job site to all persons employed on the work, persons visiting the Work, property residents, and the general public and shall save the Owner and Architect harmless from all claims arising from the use of public streets, sidewalks, and adjoining premises for construction purposes. Contractor shall construct temporary barricades and fences as indicated on the drawings.

21. PROTECTION OF PROPERTY: Contractor shall be wholly responsible for protecting the Work under construction, construction materials stored on site, and the Owner's property, the City Right-Of-Way, including trees, adjacent to or in the path of Work, and shall insure him for any losses, damages, or injuries related herein.

22. CONSTRUCTION SCHEDULE: The contractor shall submit to the Owner's Representative for their review his construction schedule broken down by trade, or in a form approved by the architect as a condition of drawing his mobilization (first) payment. If the project falls behind this schedule the Owner's Representative shall require the General Contractor to submit updated schedules as a condition of receiving payment. Construction schedules must be submitted in bar graph form, showing floats and overlaps.

23. FURNISH AND INSTALL: The term "Furnish and Install" herein, means the contractor shall provide all labor, materials, equipment, services, and transportation required to complete all work specified herein or as shown on the drawings.

24. SUBMITTALS:

    a. The General Contractor is responsible for procuring all submittals and submitting them to the Owner's Representative for the architect's approval and shall not allow Subcontractors or suppliers to send their submittals directly to the Owner's Representative. The General Contractor shall check all shop drawings and submittals before submitting them to the Owner's representative for approval. He shall not submit shop drawings or submittals that are incomplete, inaccurate, or unacceptable for any other reason.

    b. All submittals specified herein shall be submitted to the Owner's representative within 28 working days of the notice to proceed. Failure to do this could result in delay to approval of payment certificates.

    c. MOCK-UP: A full-sized mockup 18" in length of the building cornice and frieze is a requirement of this project and must be approved by the architect. See drawings for details.

25. SUBSTITUTIONS: All substitutions must be submitted with the contractor's bid. The contractor shall identify the cost adjustments associated with the substitution he is

proposing. No substitutions of materials or finishes will be allowed without the Owner's Representative written approval. The Owner reserves the right to deny all or any requests for substitution

26. COORDINATION: Contractor shall check and coordinate work of all trades and Suppliers, as follows:

    a. The General Contractor is responsible for delivering the specifications and drawings to the trades and suppliers prior to bidding the project, then after work commences, prior to ordering work or fabrication. He shall keep the trades and suppliers abreast of all changes to the work, delivering revised drawings and specifications in a manner that will not delay or confuse the work.

    b. The General Contractor is wholly responsible for scheduling the work of subcontractors and trades to prevent conflicts of work and to assure timely delivery of material and timely completion of work. Failure of a Subcontractor to procure materials or complete work on time will not relieve the General Contractor of this responsibility or to relieve him of the resulting burden of costs associated with special orders, air shipments, hiring of additional men or new contractors to immediately custom fabricate or otherwise procure missing materials, and all associated administrative costs incurred by the owner and Architect.

27. TEMPORARY UTILITIES AND FACILITIES:

    a. TEMPORARY WATER: Contractor may use Owner's existing city water connection prior to installation of the new system and afterwards with written permission of the Owner's Representative, provided he be responsible for all damage to these systems during the course of the construction. Contractor shall provide potable water for construction purposes and drinking for all trades at all times.

    b. TEMPORARY ELECTRICITY: The Contractor shall make arrangements with the local electric company for temporary electric service, pay all expenses in connection with its installation, operation, and removal, and pay for the energy consumed by all trades. When permanent electrical power and lighting systems are in operating condition they may be used for temporary power for lighting and construction purposes, provided that the Contractor obtains written permission from the owner and assumes full responsibility for the entire power and lighting system and pays for any operation and restoration of the system, and provide new lamps for all fixtures before final acceptance of the work. See DIVISION 16 ELECTRICAL for additional requirements.

    c. TEMPORARY TOILETS: Contractor shall provide code-compliant chemical toilet facilities for contractor's staff, subcontractor's staff, and public during entire course of construction. Contractor shall locate the toilet within the project limit lines away from the public sidewalk but where instructed by the Owner's Representative.

    d. TEMPORARY TELEPHONE: Contractor shall at all times have a telephone that will be answered by the superintendent or foreman. A cell phone will be acceptable.

28. TEMPORARY FENCING AND BARRICADES: Provide a temporary minimum six foot high chain link fence along the contract limit lines as shown on drawings for use during the duration of the construction.

a. FENCING

1) Fencing shall be 12.5 GA.; mesh shall be 2 3/8" or 2 ¼"; all components shall be galvanized. Rails and posts shall be 17 GA. Top rail shall be 1-3/8" Dia. Line Posts shall be 1-5/8" Dia. and Terminal Posts shall be 1-7/8" Dia. Fittings shall meet ASTM F626-96. Posts shall be anchored in 16" of concrete. Refer to drawings for location of contract limit lines.

b. BARRICADES WITHIN THE CEMETERY:

1) Provide 48" high barricades of orange polyethylene fencing to direct visitors and public away from construction work. Barricades shall be supported by 4x4 posts set in concrete in 16" x 16" concrete blocks not more than 8' on center and shall be maintained in a taunt and erect condition at all times during construction. Refer to drawings for locations. See also, DIVISION 1, Paragraph 19, Access for Funerals.

29. TEMPORARY SHORING: Provide all temporary bracing and shoring necessary to withstand wind loads during construction and until all field connections are completed and shear walls and framing are in place.

30. PUBLIC PROPERTY: Keep public sidewalks and streets adjacent to the property clear of debris, materials, and construction equipment during the work. Repair all public property where disturbed or damaged during construction and leave them in as good condition after the completion of the work as before operations started.

31. SITE CLEANLINESS: Contractor shall keep site free of rubbish and debris and in a neat and orderly condition at all times.

32. SCAFFOLDING: Furnish, install, and maintain all scaffolding, staging, and planking for the use of all trades, except as otherwise stipulated.

33. MEASUREMENTS: The General Contractor shall take all building and site measurements and be responsible for their accuracy.

34. CUTTING AND PATCHING: The Contractor shall be responsible for cutting, fitting, and patching of both new and existing work as required to carry out the work under this contract. Cutting, fitting and patching shall not endanger or damage work under this contract or existing construction.

35. FIRE EXTINGUISHERS: Provide for duration of work at 5' height in a conspicuous location within the house, one 10 LB ABC fire extinguisher ready for instant use. These shall remain mounted at 5' height at all times during the project, even if moved to different locations. Failure to adhere to this requirement can result in approval of payment certificates and delay in payment to the General Contractor.

36. ENTRANCES TO THE BUILDING: At any exterior gateway or other opening into the

building which is accessible from the sidewalk or ground floor and not otherwise closed, provide temporary weather tight and lockable doors as required, complete with frames, and equipped with suitable hinges, hasps, staples, and padlocks with keys.

37. WEATHER PROTECTION: Contractor shall provide all necessary means to weather-proof interior of the entire building once dried in for the duration the construction period.

38. INSPECTIONS BY THE OWNER'S REPRESENTATIVE: The jobsite and office shall be open to the Owner's Representative at all times during business hours for the purpose of inspecting and observing the work.

39. WORKING HOURS: Work shall be undertaken during hours specified by the local building department or, if not specified, only during weekdays, from 8AM until 5 PM, or as allowed by the city. Contractor may be required to stop work during special events and holidays.

40. CONTRACT DOCUMENT CONFLICTS: In cases of conflict or discrepancies among the contract documents, the documents shall be construed according to the following priorities:

a.	Highest Priority:	Change Orders
b.	Second Priority	Agreement
c.	Third Priority	Most recent addenda
d.	Fourth Priority	Supplementary General Conditions
e.	Fifth Priority	General Conditions
f.	Sixth Priority	Specifications*
g.	Seventh Priority	Drawings

In case of conflicts between drawings as to the extent or locations of materials, the following order of precedence shall be followed:

h. Large scale drawings (e.g., 1-1/2"= 1'-0" scale)
i. Small scale drawings (e.g., 1/4"= 1'-0" scale)
j. Schedules

*IN CASES OF CONFLICT BETWEEN DRAWINGS AND SPECIFICATIONS REGARDING THE QUALITY OF MATERIALS TO BE SUPPLIED, THE SPECIFICATIONS SHALL GOVERN.

41. TERMITE TREATMENT: The project shall meet FBC requirements for termite treatment, and termite protection devices as follows:

a. As a condition of the Certificate of Occupancy the General Contractor shall provide a Certificate of Protective Treatment for Prevention of Termites from a licensed contractor registered by the Florida Department of Agriculture and Consumer Services.
b. The building shall be protected by a registered termiticide or bait system applied by a licensed contractors registered by the Florida Department of Agriculture and Consumer Services.
c. Bait systems, if proposed, must be approved by the building official.
d. The soil under the foundation slab shall be treated with a registered termiticide at three stages:
   1) At completion of compaction of sub grade before installation of the

specified vapor barrier.

2) Under all adjoining slabs.

3) Along the exterior of the foundation when construction is completed but before issuance of the certificate of occupancy.

NOTE: If the soil is disturbed after treatment at any time the disturbed areas shall be retreated.

e. All slab penetrations shall be protected with protective sleeves and/or other means according to FBC 1816.2.

f. AC condensate discharge line must extend 12" form the side of the building.

g. All wood structures must be at least 6" above adjoining grade.

h. Cells in concrete blocks may not contain cellulosic debris of any kind. All cells shall be grouted full from slab to tie beam.

i. Monitoring: The Owner shall meet FBC Chapter 482 for a maintenance contract for termite control, commencing at the first termiticide treatment.

42. ADA SIGNAGE: Contractor shall meet the 2010 Florida Building Code and the ANSI requirements for ADA signage for visual height to finish floor, horizontal, viewing distance, and minimal character height using the International Symbols of Accessibility. Signs shall consist of the following:

a. Exterior Signs

1) TYPE 1: Three (3) 6" high ADA Accessible Signs with Right directed arrow.

2) TYPE 2: One (1) 6" high ADA Entrance Sign.

3) International Symbol of Accessibility Sign and Van Accessible Sign on same Post at Handicap Accessible Parking Space (see drawing detail 7/C1).

4) Bid Alternate No. 10: TYPE 1: One (1) 6” high ADA Accessible Sign with Right directed arrow and a TYPE 1: One (1) 6” high ADA Accessible Sign with Left directed arrow on same post and a TYPE 2: One (1) 6” high ADA Entrance Sign.

b. Interior Signs

Interior signs shall be located on the wall on the lever side of the door.

1) TYPE 3: One (1) 6" high ADA Exit Sign.

2) TYPE 4: One (1) 6" high ADA Unisex Bathroom Sign.

3) Bid Alternate No. 10: TYPE 3: One (1) 6” high ADA Exit Sign.

c. Signs shall be constructed of acrylic, shall have non-glare sans serif WHITE Letters on a non-glare BLUE background. Interior height shall be not less than 40" nor more than 70" above the finished floor. Attachment to walls shall meet FBC criteria.

43. SEXTON GUIDELINES FOR CONTRACTORS PERFORMING WORK IN CEMETERY

a. No cursing

b. No littering

c. No standing, walking, sitting, or lying on graves, tombs, or crypts

d. No equipment left on graves, tombs, or crypts

e. No spitting

f. No alcoholic beverages
g. No loud or profane music

DIVISION 2A: DEMOLITION (N.I.C. – Performed by Owner)

1. GENERAL REQUIREMENTS

   a. Include GENERAL CONDITIONS, SUPPLEMENTARY GENERAL CONDITIONS as part of this section.

   b. Examine all other Sections of the Specifications for requirements that affect the work of this Section whether or not such work is specifically mentioned in this section.

   c. Coordinate work with that of all other trades affecting or affected by the work of this section. Cooperate with such trades to assure the steady progress of all work under the contract.

2. RELATED SECTIONS: Division 1 GENERAL REQUIREMENTS; Division 2B SITE PREPARATION; Division 2C SITE IMPROVEMENTS; Division 2D Landscaping; Division 4 CONCRETE MASONRY UNITS; Division 15B PLUMBING; Division 16 ELECTRICAL.

3. PUBLIC AND PROPERTY PROTECTION

   a. Provide all measures required by federal, state, and municipal ordinances, laws, and regulations for the protection of surrounding property, sidewalks, curbs, fencing, cemetery structures, including grave sites and monuments; the public, workmen, and Owner's employees during demolition operations. Measures taken shall include fencing, barricades, warning lights, and sign, etc. and shall in accordance with all applicable codes and ordinances specified above and as follows:

4. TEMPORARY FENCING AND BARRICADES: See Division 1 GENERAL REQUIREMENTS, Paragraph 28.

5. PROTECTION OF SAUSAGE TREE

   a. Before commencing with other demolition work under this Section, provide protection for the existing Sausage Tree. Refer to the drawings and arrange a conference on the site with the Owner's Representative to identify and mark the area of the tree to be protected.

   b. The Sausage Tree shall be protected by the erection of sturdy wood boxing 4'-0" high, or other fencing approved by the Owner's representative. Boxing shall be placed at least 4'-0" out from the trunk and shall be erected prior to any construction or excavation work on site. Fencing and boxing shall be maintained during the full time of construction work on the site and removed only when directed by the Owner or Architect.

   c. Exercise extreme care during excavation to prevent damage to roots. When

excavating do so in a manner which will cause minimum damage to root systems. When excavating utility trenches within branch spread of the tree, all work shall be done by hand. Open such trenches only when the utility can be installed immediately. Prune injured roots cleanly and backfill as soon as possible.

d. Any part of the Sausage Tree that has been damaged during construction in the opinion of the Owner's Representative shall be treated by the Owner using a professional horticulturist at the Contractor's expense.

e. The Sausage Tree may at no time be used for crane stays or guy anchors, or other fastenings. Vehicles shall not be parked, nor debris stored where damage may result to the tree. Do not stockpile fill around the bases of the tree.

f. Where trees must be pruned or removed in order to facilitate construction, the Owner's Representative will determine who is qualified to do the work and assign work at Owner's expense.

6. REMOVAL AND STORAGE OF FENCING: Fencing may not be removed until removing all plaques and the Owner's Representative has approved commencement of the work. Remove panels, posts, post foundations, and concrete edging at the sidewalk. Owner shall coordinate moving and storing of fence panels. Storage space for all fence materials shall be made available to the contractor by the Owner. Contractor will be required to reuse fence panels through modifying as required to reinstall panels as illustrated on drawings.

7. COMBUSTIBLES: Combustible materials and rubbish shall not be allowed to accumulate on the site but shall be hauled away daily.

8. REMOVAL OF THE EXISTING BUILDING AND FENCE FOUNDATIONS: Before removing and demolishing existing building and fence foundations, the Owner's Representative will provide Owner's preferred procedures. Concrete slab or foundations may not be removed without the Owner's Representative' WRITTEN approval to proceed. Upon approval the City shall remove the existing slab and building/fence foundations completely below grade.

9. DEMOLITION METHODS: Demolition shall be performed in a manner that will insure the safety of adjacent property, property which is occupied, and persons occupying such property. City shall protect against all damages and injuries which could occur from falling debris or other causes, and so not to interfere with the use of adjacent structures or the free and safe passage to and from these areas.

10. DEMOLITION PORTION SITE GRADING: After City completes removal of all underground concrete foundations and utilities, City will level and grade site to approximately elevation 6.00.

DIVISION 2B: SITE PREPARATION

1. GENERAL REQUIREMENTS

a. Include GENERAL CONDITIONS, SUPPLEMENTARY GENERAL

CONDITIONS as part of this section.

b. Examine all other Sections of the Specifications for requirements that affect the work of this Section whether or not such work is specifically mentioned in this section.

c. Coordinate work with that of all other trades affecting or affected by the work of this section. Cooperate with such trades to assure the steady progress of all work under the contract.

2. RELATED SECTIONS: Division 1 GENERAL REQUIREMENTS; Division 2A DEMOLITION; Division 3 CONCRETE; Division 4 CONCRETE MASONRY UNITS; Division 15B PLUMBING; Division 16 ELECTRICAL.

3. SITE DRAINAGE:

a. The Contractor shall assume responsibility for normal (non hurricane) site and subsurface drainage and shall maintain such drainage during the life of his contract.

b. Legally remove by pumping, draining, or bailing all water which may accumulate or be found on the site within the contract limits during the life of the contract.

c. Under no circumstances place concrete, pour fill, lay piping, or install appurtenances in excavations containing free water. Keep utility trenches free from water until pipe joint material has hardened.

4. EXCAVATION AND FILL

a. SCOPE: Excavate to elevations and dimensions specified herein or indicated on the drawings or required to do the work. Do all necessary excavation, including but not limited to excavation for foundations, slabs, utility lines, mechanical work, and drainage structures.

b. PERMITS: All permits, fees, and other municipal costs related to such work shall be borne by the contractor.

c. SURPLUS: Surplus materials not required to fulfill the requirements of the contract shall become to property of the Contractor and shall be removed from the site and legally disposed of.

d. UTILITIES: Excavate as necessary for all pipes, storm and sanitary drainage, electrical, gas, and water lines, and for related structures and appurtenances. Unless otherwise indicated, provide separate trench for each utility.

e. TRENCHING: The bottoms of trenches in earth for sanitary piping shall be carried six (6) inches below pipe invert and the entire trench backfilled with drainage fill up to the third point of the pipe. Grade bottoms of trenches evenly to ensure uniform bearing for the full length of all pipes. Pitch trenches as required for drainage pipe. Utilities shall be placed in separate trenches.

f. BACKFILLING:

1) Backfill and compact excavations in 6" lifts using hand or mechanical tamps. Rock may not be used for backfill.
2) Coordinate all trench backfilling with mechanical and other trades involved.
3) No fill shall be placed, spread, or rolled during rainy weather, conditions.
4) Fill shall be compacted according to the following densities:
   a) Ordinary Fill: Not less than 90% dry density.
   b) Structural Fill: Not less than 95% dry density
   c) Drainage Fill: Per county standard.
5) Do not commence backfilling utility trenches until all piping. conduit, etc., has been installed and tested and the locations of all pipe and appurtenances have been recorded. Backfill carefully around pipe using ordinary fill material sized less than 3/4" in diameter.

g. FILL MATERIALS

1) Structural Fill: Structural fill for foundations, grade beams and slabs on grade shall be sound graded durable crushed lime rock from off-site completely free of organic matter and compacted to within 95% of maximum dry density, grades as follows 10% no. 200 size; 50% 1/4" size, 30% 3/4", 10% 1". Thickness shall be 5".
2) Ordinary Fill: Ordinary Fill shall be graded native soil, free of organic compressible matter, with no stone larger than four (4) inches in diameter, compacted to 90% dry density.
3) Gravel: Gravel shall be white 3/8" pea gravel 4" in depth upon compacted sub grade.
4) Rice Rock: Rice rock shall be used for all domestic water trenching. See Division 15A for more information.

DIVISION 2C: SITE IMPROVEMENTS

1. GENERAL REQUIREMENTS

a. Include GENERAL CONDITIONS, SUPPLEMENTARY GENERAL CONDITIONS as part of this section.

b. Examine all other Sections of the Specifications for requirements that affect the work of this Section whether or not such work is specifically mentioned in this section.

c. Coordinate work with that of all other trades affecting or affected by the work of this section. Cooperate with such trades to assure the steady progress of all work under the contract.

2. RELATED SECTIONS: Division 1 GENERAL REQUIREMENTS; Division 2A DEMOLITION; Division 3 CONCRETE; Division 4A CONCRETE MASONRY UNITS; Division 15B PLUMBING; Division 16 ELECTRICAL.

3. MATERIALS

a. CONCRETE WALKS:

1) Slab shall be four inches (4”) thick and the strength of the concrete shall be 3500 psi. Compacted sub grade must meet compaction criteria specified under BACKFILLING, Division 2B.
2) Finish: Broom finish on sidewalks.
3) Color: Portland Cement grey.
5) Curing: Water
6) Joints: Tooled. See drawings for locations.

b. FENCING: From existing fencing provided by the city the contractor shall modify the fencing to fit the layout indicated on the site plan and install the fencing as required, providing the post base and wall connections required. Hardware, post, and welds shall match the color and finish of the fencing.

c. SOD: Provide St. Augustine Floratam sod as directed by the Owner's representative.

DIVISION 3: CONCRETE

1. GENERAL REQUIREMENTS

a. Include GENERAL CONDITIONS, SUPPLEMENTARY GENERAL CONDITIONS as part of this section.

b. Examine all other Sections of the Specifications for requirements that affect the work of this Section whether or not such work is specifically mentioned in this section.

c. Coordinate work with that of all other trades affecting or affected by the work of this section. Cooperate with such trades to assure the steady progress of all work under the contract.

d. SCOPE: Provide concrete for foundations, grade beams, stairs, and slabs.

e. RELATED SECTIONS: Division 1 GENERAL REQUIREMENTS; Division 2B SITE PREPARATION; Division 4A CONCRETE MASONRY UNITS; Division 5, STRUCTURAL STEEL AND MISCELLANEOUS IRON; Division 15B PLUMBING; Division 16 ELECTRICAL.

f. CODES: All concrete work shall conform to the Florida Building Code 2010 or latest edition, Chapters under “Concrete Construction". All concrete work and reinforcement detailing shall be in accordance with ACI Building Code 318-89. Mixing, placing, and curing of all concrete shall conform to ACI Building Code 305R-89, Hot Weather Concreting.

g. SHEET NOTES: See Structural Engineer’s drawings for additional requirements.

h. DETAILS: See drawings for locations and details.

2. MATERIALS:

a. CONCRETE: Cement for foundations shall be of Type 1 Portland Cement ASTM C-150, fine and coarse aggregate, proportioned and mixed to meet a 28 day compressive strength of not lower than 3,500 psi and not more than 4,000 psi. Max slump shall be 5" and place within 90 minutes of batch time.

b. WATER: Water shall be potable.

c. AGGREGATE: Aggregate for concrete shall be clean and free from oils, salt, alkali, organic matter, and other deleterious materials. Sand shall be natural and washed with potable water.

d. REINFORCING STEEL: All reinforcing steel shall be high strength deformed bars conforming to ASTM A615-89 Grade 60, except ties, stirrups, and plate anchors, which shall be deformed bars, ASTM designation A615-89, Grade
Reinforcing steel shall be clean and free of rust at the time of pouring of concrete. In the event reinforcing steel is delivered to the jobsite with evidence of rusting bars all rust must be treated with a solution of 75% phosphoric acid such as The Skybrite Company's Ospho.

e. VAPOR BARRIER UNDER SLAB: Vapor Barrier shall be 6 mil polyethylene sheeting with taped joints, set upon a smooth, compacted subgrade.

3. EXECUTION

a. PLACING AND FINISHING CONCRETE SLAB

1) Provide proper curing, control joints, and steel coverage.

2) Provide 1-1/2" drops (block outs) for marble tile in the vestibule and wood floor in the Family Room (Alternate No. 2) as indicated on the drawings.

b. FINISHING OF SLAB

1) Slab shall be wet troweled as required by the vinyl tile manufacturer (See Division 9E VINYL FLOORING).

2) Alternate No. 2 block out in Family Room shall be trowel finished to provide a smooth surface for the vapor barrier. .

c. CONTROL JOINTS: Provide control joints as indicated on the Foundation Slab plan. Control joints shall be saw cut 1" deep within 24 hours of the slab pour. See drawings for locations.

d. REINFORCING STEEL COVERAGE: Reinforcing steel coverage shall be as follows:

1) Concrete poured against earth: 3"

2) Concrete poured against forms: 2-1/2"

3) Columns and Beams: 2-1/2"

Lap spices shall not be less than 30 diameters, unless otherwise called out on the drawings.

e. IMBEDDED ITEMS: Contractor shall properly set all anchor bolts and other imbedded items furnished under other sections for building into concrete.

DIVISION 4A: CONCRETE MASONRY UNITS

A. GENERAL

1. Include GENERAL CONDITIONS, SUPPLEMENTARY GENERAL CONDITIONS as part of this section.
2. Examine all other Sections of the Specifications for requirements that affect the work of this Section whether or not such work is specifically mentioned in this section.

3. Coordinate work with that of all other trades affecting or affected by the work of this section. Cooperate with such trades to assure the steady progress of all work under the contract.

4. SCOPE: Provide all labor, materials, equipment, services, and transportation required to complete all concrete masonry work.

5. RELATED SECTIONS: Division 1 GENERAL REQUIREMENTS; Division 3, CONCRETE; Division 5, STEEL; Division 6A and 6B, ROUGH and FINISH CARPENTRY; Division 9C, STUCCO.

6. GUARANTEE

a. Attention is directed to provisions in the GENERAL CONDITIONS regarding guarantees and warranties for work under this Contract.

b. Manufacturers shall provide their standard guarantees for work under this Section. However such guarantees shall be in addition to, not in lieu of all other liabilities which manufacturers and the Contractor may have by law or by other provisions of the Contract Documents.

B. MATERIALS

1. Concrete masonry units shall conform to ASTM C90 standards for Type II with minimum masonry compressive strength of F=2000 PSI strength.

2. MORTAR: Mortar shall be Type M or S, 1800 PSI strength and shall conform to ASTM C476. No type admixture shall be used.

3. COARSE GROUT: Coarse grout shall conform to ASTM C476, with 2500 psi at 28 days, maximum aggregate of 1/4”, and an 8” to 10” slump.

4. REINFORCING: Provide vertical bar and horizontal joint reinforcing as called out on the structural drawings.

C. INSTALLATION

1. Concrete blocks shall be laid dry and grouted full.

2. Place blocks in a running bond with 3/8” mortar joints. Joints shall be struck flush where receiving stucco.

3. Grouting: All reinforcing cells shall be clean and free of foreign material and debris. Fill cells with coarse grout as specified. Provide ACI 90 degree standard hooks into footing and roof tie beam (if applicable).

4. Vertical bars shall be held in position at the top and bottom of bar and at 8’-0” maximum between connections, with a minimum clearance of 1/2” from sides of masonry void. The clear distance between bars shall be not less than one bar diameter.

5. Vertical and horizontal reinforcing shall be called out on the drawings.

6. Reinforcing bars shall be straight except for bends around corners and where bends or hooks are called for on the drawings.

7. Tops of partially constructed walls and plinths shall be covered with polyethylene sheeting at the end of the work day, and when occurs.

DIVISION 4B: PRECAST CONCRETE EXTERIOR WINDOW SILLS

A. GENERAL

1. Include GENERAL CONDITIONS, SUPPLEMENTARY GENERAL CONDITIONS as part of this section.

2. Examine all other Sections of the Specifications for requirements that affect the work of this Section whether or not such work is specifically mentioned in this section.

3. Coordinate work with that of all other trades affecting or affected by the work of this section. Cooperate with such trades to assure the steady progress of all work under the contract.

4. SCOPE: Provide all labor, materials, equipment, services, and transportation required to supply and install precast concrete window sills. See drawings for details.

5. RELATED SECTIONS: Division 1 GENERAL REQUIREMENTS; Division 3, CONCRETE; Division 7C, CAULKING AND SEALANTS; Division 8E, WINDOWS; Division 9A PAINT; Division 9C, STUCCO.

6. SUBMITTALS: Submit for the Owner's representative's approval one color sample, one full scale profile drawing, and data sheets including anchoring method.

7. MANUFACTURER: Pre-cast concrete sills shall be manufactured by Cast Stone Systems, 532 N Main St. Warrenton, NC 27589, (252) 257-1599 or approved equal by Owner.

8. DELIVERY, STORAGE, AND PROTECTION OF MATERIALS

   1) All materials shall be brought to the site in manufacturer's original unbroken factory-sealed containers bearing the manufacturer's standard label indicating product, brand name, manufacturer, weight, product type, and color.

   2) Handle and protect material from rain and moisture and contamination in transit and after arrival on the job.

   3) The General Contractor shall receive, check against owner's list all items, and store them at a secure location until ready to install. The General Contractor shall be solely responsible for all items after delivery.

9. GUARANTEE

   a. Attention is directed to provisions in the GENERAL CONDITIONS regarding guarantees and warranties for work under this Contract.

   b. Manufacturers shall provide their standard guarantees for work under this Section. However such guarantees shall be in addition to, not in lieu of all other liabilities which manufacturers and the Contractor may have by law or by other provisions of the Contract Documents.

B. MATERIALS: Materials shall conform to Cast Stone Systems' Specification Section 03450 for General, Products, and Execution requirements put forth on its website as of the date of this specification.

1. Part No.: S5

2. All pre-cast stone sills shall be one piece. Joints will not be allowed.

3. Color: CSS Core 1 Color Group "Natural Sand".

4. Installation Mortar: Type N Mortar. See Division 4A CONCRETE MASONRY UNITS.

C. INSTALLATION

1. EXAMINATION: Contractor shall check precast materials for quantities, size, model and finish prior to installation. Non-conforming materials will be rejected.

2. SETTING

a) Drenching: Drench units with clean water prior to setting.

b.) Prime ends of units, insert properly sized backing rod and install required sealant.

b) Fill dowel holes and anchor slots (if used) full with mortar.

c) Set units in full bed of mortar.

d) Horizontal Joint atop CMU: 3/8".

e) Rake mortar joints to accept stucco.

f) Tolerances; Set stone sills 1/8" or less within fir of window. Vertical tolerance shall allow return of stucco.

g) Interface With Window Frame: Allow for 1/8" for gun grade sealant. See Division 7C Caulking and Sealants.

3. FIELD: Repair chips with touchup materials furnished exclusively from manufacturer. Consult with manufacturer for appropriate cleaners.

DIVISION 4C: MARBLE WINDOW SILLS

A. GENERAL

1. Include GENERAL CONDITIONS, SUPPLEMENTARY GENERAL CONDITIONS as part of this section.

2. Examine all other Sections of the Specifications for requirements that affect the work of this Section whether or not such work is specifically mentioned in this section.

3. Coordinate work with that of all other trades affecting or affected by the work of this section. Cooperate with such trades to assure the steady progress of all work under the contract.

4. SCOPE: Provide all labor, materials, equipment, services, and transportation required to supply and install marble sills. See drawings for details.

5. RELATED SECTIONS: Division 1 GENERAL REQUIREMENTS; Division 3, CONCRETE; Division 6A ROUGH CARPENTRY; Division 7C, CAULKING AND SEALANTS; Division 8E, WINDOWS; Division 9A PAINT.

6. SUBMITTALS: Submit for the Owner's representative's approval the following:

a. Marble, 3/4" thick, finished, to be returned to vendor.

b. Shop drawings showing final sizes.

8. DELIVERY, STORAGE, AND PROTECTION OF MATERIALS

a. Handle and protect material from rain and moisture and contamination in transit and after arrival on the job.

b. The General Contractor shall receive, and check all items against his shop drawings for size and quality and store them at a secure location until ready to install. The General Contractor shall be solely responsible for all items after delivery.

9. GUARANTEE

a. Attention is directed to provisions in the GENERAL CONDITIONS regarding guarantees and warranties for work under this Contract.

b. Manufacturers shall provide their standard guarantees for work under this Section. However such guarantees shall be in addition to, not in lieu of all other liabilities which manufacturers and the Contractor may have by law or by other provisions of the Contract Documents.

B. MATERIALS:

1. Marble sills shall be white Carrara as carried by Island City Tile, Key West, or approved equal by Owner.

2. Grade shall be China White, no fills.

3. Size shall be the width of the finished drywall returns of the windows by a depth allowing 3/4" overhang from the face of the finished drywall. Do not provide rabbit ears. Thickness shall be 1".

4. Finish shall be polished; top and edges. Nosing shall be square, eased.

C. INSTALLATION

1. SITE CONDITION PRIOR TO ORDERING: Contractor shall verify finished window opening dimensions before fabrication of sills in order to assure custom fit to installation. Non-conforming materials will be rejected.

2. SETTING

a) Drenching: Drench units with clean water prior to setting.

b.) Prime ends of units, insert properly sized backing rod and install required sealant.

c) Set units in full bed of mortar.

d) Tolerances; Set sills 1/16” or less within window finish opening.

e) Interface With Window Frame: Allow for 1/8” max for gun grade sealant.

3. FIELD: Remove and replace all sills chipped at any time during shipment, storage or installation. Do not attempt to touchup.

DIVISION 5: STRUCTURAL STEEL AND MISCELLANEOUS IRON

A. GENERAL

1. Include GENERAL CONDITIONS, SUPPLEMENTARY GENERAL CONDITIONS as part of this section.

2. RELATED SECTIONS: Division 1 GENERAL REQUIREMENTS; Division 3, CONCRETE; Division 4A, MASONRY; Division 6B ROUGH CARPENTRY; Division 6C FINISH CARPENTRY; Division 6D PREFABRICATED COLUMNS.

3. Examine all other Sections of the Specifications for requirements that affect the work of this Section whether or not such work is specifically mentioned in this section.

4. Coordinate work with that of all other trades affecting or affected by the work of this section. Cooperate with such trades to assure the steady progress of all work under the contract.

5. SCOPE: Provide all labor, materials, equipment, services, and transportation required to complete all metals work as specified herein.

6. STANDARDS: AISC “Specifications For The Design, Fabrication, and Erection of Structural Steel for Buildings” and AWS – D.1-92 Structural Welding Specifications.

7. CODES; All steel work shall conform to the Florida Building Code 2010 or latest edition, "Steel Construction".
8. GUARANTEE

   a. Attention is directed to provisions in the GENERAL CONDITIONS regarding guarantees and warranties for work under this Contract.

   b. Manufacturers shall provide their standard guarantees for work under this Section. However such guarantees shall be in addition to, not in lieu of all other liabilities which manufacturers and the Contractor may have by law or by other provisions of the Contract Documents.

B. MATERIALS:

1. STRUCTURAL STEEL: All structural steel shall be free from defects impairing strength, durability, or appearance and shall be the best commercial quality for each intended purpose and shall meet the following ASTM Grades.

   a. Angles, channels and miscellaneous shapes, imbedded items, and threaded rod: A36.

b. Tube Columns: A500, Grade B.

c. Base Plates: A572, Grade 50 l

d Anchor Bolts: F1554, GR.55

e. Miscellaneous Embedded Items 325; Anchor Bolts: A307.

f. Through Bolts: A536

2. WELDING ELECTRODES: E70XX Series.

3. PAINT: Approved Primer, See DIVISION 9 FINISHES, 2 mils thick.

C. EXECUTION

1. FABRICATION:

a. Shop fabricate to the greatest extent possible by welding.

b. All work shall be executed by experienced mechanics and shall conform to details, be clean and straight with sharply defined profiles. Finished surfaces shall have smooth finishes.

c. All welding shall be shop welds and shall be continuous and shall conform to requirements of AISC and AWS standards.

d. All structural steel members if applicable shall be shop primed.

e. All steel bolts, clips, nails, and other steel fasteners for exterior use or attached to preserved wood shall be hot-dipped galvanized or stainless steel.

f. All bolts shall be standard all-thread.

DIVISION 6A: PRE-ENGINEERED TRUSSES

1. GENERAL REQUIREMENTS

a. Include GENERAL CONDITIONS, SUPPLEMENTARY GENERAL CONDITIONS as part of this section.

b. RELATED SECTIONS: Division 1 GENERAL REQUIREMENTS; Division 3, CONCRETE; Division 4A, MASONRY; Division 5, STRUCTURAL STEEL AND MISCELLANEOUS IRON; Division 6B ROUGH CARPENTRY; Division 7D INSULATION.

c. Examine all other Sections of the Specifications for requirements that affect the work of this Section whether or not such work is specifically mentioned in this section.

d. Coordinate work with that of all other trades affecting or affected by the work of this section. Cooperate with such trades to assure the steady progress of all work under the contract.

2. SCOPE: Furnish and install pre-engineered roof trusses. See structural drawings. Furnish and install all necessary blocking, nailing strips, strong backs, and all other accessory components needed as shown or implied by the drawings and as required to frame the attic floor and to allow the proper installation of trades.

3. CODES: All carpentry work shall conform to the Florida Building Code, 2010, "Wood Construction".

4. HANDLING AND STORAGE: All lumber specified herein shall be stored on site in a dry, ventilated location, off the ground, with a tarp covering at day's end. Wood specified to be air dried shall be stacked with a minimum of 1" sticking between individual pieces.

5. SCAFFOLDS: Furnish, install, and maintain for all the trades all necessary scaffolding, staging, and planking except as otherwise stipulated.

6. PROTECTION: Protect all work against damage during construction.

7. PRESSURE TREATMENT: All trusses shall be pressure treated. Pressure treatment shall be pressure impregnated borate preservative.

8. MANUFACTURER: Pre-engineered trusses shall be designed, fabricated, and delivered to the jobsite as follows. The general contractor shall furnish the truss manufacturer with a set of the most up-to-date architectural and structural drawings.

   a. Wood trusses shall be designed and fabricated in accordance with the "Design Specification for Metal Plate Connected Wood Trusses" published by the Truss Plate Institute (TPI), and applicable building codes.

   b. The wood truss manufacturer must participate in a code-approved third party quality assurance program such as the Truss Plate Institute's "Quality Control Inspection Program.

   c. Prior to fabrication the contractor shall require the truss manufacturer to produce shop drawings for his and the Owner's approval that provide the following information:

      1) Span length and spacing of members.

      2) All design loads and their points of application.

      3) Adjustments to allowable values (duration of load factors).

      4) Reactive forces and their locations.

      5) Bearing type and minimum bearing length.

6) Deflections, span, and reaction.

7) Metal connector plate, gauge, size and location.

8) Lumber size, species, grade and moisture content.

9) Location and connection design of required continuous lateral bracing.

10) Truss splice detailing (if any).

11) Connection details: truss to bearing, truss to truss, truss to truss girder, piggy back to truss, etc.

12) Truss erection plan with permanent bridging and bracing details.

13) Wood truss design calculations for each type of truss fabricated, sealed by a Florida licensed structural engineer.

14) Pressure treatment specifications and affidavits.

d. The shop drawings must bear the embossed seal of a licensed Florida structural engineer.

e. The General Contractor shall provide the truss fabricator with an up-to-date set of architectural and structural drawings with the order for the trusses.

f. Deflection limitations: Roof Live load: L/360.

g. Continuous bottom chord lateral bracing is required at a minimum spacing of 10'-0" O.C. and shall be continuous from one end of the building to the other. Overlaps shall be no less than one truss space.

h. The truss erector is responsible for all temporary bracing of truss system during erection.

i. All trusses shall be attached to their supports as indicated on the drawings or approved by the architect.

j. Piling and storing of plywood sheathing on trusses is not allowed.

k. Reinforcing of trusses with plywood is not allowed without the truss manufacturer's engineers written and sealed approval..

l. Field alteration of the trusses for any reason or of any kind is not allowed without the written and sealed approval of the truss manufacturer's structural engineer.

m. General Contractor shall coordinate all electrical, plumbing, and air-conditioning pipes, conduits, wiring, recessed lights and ducts with the provision of chase space within the ducts and shall verify that this provision has been made by the truss fabricator.

n. Where Simpson Strong Tie connectors are specified to hold down or otherwise

secure the trusses strictly follow Simpson Strong Tie specifications for type, number, and size of fasteners. Use only connectors specified.

DIVISION 6B: ROUGH CARPENTRY

1. GENERAL REQUIREMENTS

   a. Include GENERAL CONDITIONS, SUPPLEMENTARY GENERAL CONDITIONS as part of this section.

   b. RELATED SECTIONS: Division 1 GENERAL REQUIREMENTS; Division 3, CONCRETE; Division 4A MASONRY; Division 5, STRUCTURAL STEEL AND MISCELLANEOUS IRON; Division 6A PRE-ENGINEERED TRUSSES; Division 6C FINISH CARPENTRY; Division 7D INSULATION; Division 8A FRONT DOOR AND TRANSOM; Division 8C INTERIOR DOORS; 8D HOLLOW METAL DOORS; 85 WINDOWS; Division 9, ALL; Division 15A PLUMBING; Division 16, ELECTRICAL.

   b. Examine all other Sections of the Specifications for requirements that affect the work of this Section whether or not such work is specifically mentioned in this section.

   c. Coordinate work with that of all other trades affecting or affected by the work of this section. Cooperate with such trades to assure the steady progress of all work under the contract.

2. SCOPE: Provide all necessary wood framing, blocking, nailing strips, furring strips, nailing inserts, rough door bucks, sheathing, underlayment, and other rough wood items and usual items of similar nature shown or implied by the drawings and as required to frame the building and to allow the proper installation of trades.

3. CODES: All carpentry work shall conform to the Florida Building Code, 2010, “Wood Construction".

4. PRESSURE TREATMENT: All framing lumber specified herein to be pressure treated shall be dry Southern Yellow Pine (SYP). It is the responsibility of the General Contractor to protect workers engaged in handling and cutting pressure treated wood that contains harmful substances. All pressure treated wood that is to be painted shall be kiln-dried to maximum 19% moisture content or less. Lumber scheduled to be painted that does not meet this requirement will be rejected.

5. HANDLING AND STORAGE: All lumber specified herein shall be stored on site in a dry, ventilated location, off the ground, with a tarp covering at day’s end. Wood specified to be air dried shall be stacked with a minimum of 1” sticking between individual pieces. Hardie products must be stored flat and kept dry and covered prior to installation. Planks can only be carried on edge. Protect corners and edges from breakage.

6. KILN-DRIED LUMBER: Kiln-dried lumber is to be primed, all sides, immediately upon delivery unless specified otherwise.

7. SCAFFOLDS: Furnish, install, and maintain for all the trades all necessary scaffolding, staging, and planking except as otherwise stipulated.

8. PROTECTION: Protect all work against damage during construction. Provide and lay all building paper required to protect finished floors.

9. QUALITY OF LUMBER: All lumber and timber used in load-bearing members shall be sound, free from rot and large or loose knots, damaging diagonal or spiral grain, and shall be at least equal in quality to the grades specified. Rough lumber shall be dressed four (4) sides, air dried, well seasoned, sound and free from splits, cracks, shakes, and wanes, loose or unsound knots, decay, and be free of twist, or camber.

10. MATERIALS SCHEDULE

a. Framing Lumber
   1) Roof and floor joists, Nailers and Blocking: No.2 SYP P.T. to sizes on plans.
   2) Non-Load Bearing Studs and Plates: No. 1 Spruce or Standard Hem-Fir to sizes indicated on plans or as otherwise required by code.

b. Plywood
   1) Roof Sheathing: APA Exterior Exposure 1 P.T. 3/4 thick.
   2) Floor Sheathing: APA Exterior Exposure Underlayment 3/4" thick, tongue and groove.

c. Exterior Trim: Cement Fiber Board (CFB) See Division 6C FINISH CARPENTRY for full specification

d. Eave Soffit Vents:. Eave Vents shall be 1" wide slots in the soffit of the eave in locations indicated on the reflected ceiling plan and shall have a continuous rolled stainless steel 20/20 fine insect mesh cut to cover the inside face of the vent.

e. Prefabricated Columns: See Division 6E PREFABRICATED COLUMNS

f. Porch Soffit: Georgia Pacific "Dens glass" 5/8" thick.

g. Rough Hardware
   1) Connectors shall be "Z-Max by Simpson Strong-Tie Co., Pleasant, CA. See connector schedule on plans.
   2) All loose miscellaneous iron connectors shall be double hot-dip galvanized to sizes indicated on plans.
   3) All sheet metal connectors are to be galvanized; all miscellaneous iron shall be factory primed.

h. Fasteners
   1) All nails, screws, bolts, and other fasteners that will be in direct contact with pressure treated lumber must be double hot-dipped galvanized, stainless steel, or as approved by the architect.
   2) Fasteners that must be in contact with pressure treated lumber but which are not double dipped galvanized or stainless steel must be separated from the

lumber with an impermeable barrier approved by the architect.

3) Masonry and concrete fasteners shall be Simpson Strong Tie Titen or Buildex Tapcon.

4) Anchor bolts into masonry or concrete shall be all-thread rods sized according to the details on the drawings or the connector schedule.

i. Pre-engineered Wood Trusses

1) SYP per pre-engineered engineer's specifications. See also Division 6A PRE-ENGINEERED TRUSSES.

j. Structural Glues

1) For gluing T&G porch decking, splicing columns, and other structural items: Loctite PL Premium Advanced Polyurethane Construction Adhesive.

2) For gluing subfloors and sheathing: Loctite 400 Polyurethane Construction Adhesive.

k. Glue for Finish Carpentry:

1) Glue for wood moldings and other wood finish items shall be Tite-Bond Type 2.

2) Glue for PVC items shall be Polyseamseal adhesive.

l. Furring Strips and Blocking: No. 2 SYP, pressure treated.

11. ROUGH CARPENTRY INSTALLATION

a. See Connection Schedule on the drawings for sizes and locations of connectors.

b. Strictly follow the Florida Building Code with reference to all nailing requirements and patterns to meet the requirements of Coastal Construction.

c. Walls shall be plumb and square.

d. Sill Connections: In no case shall there be less than two (2) bolts per length in any member.

e. Install fire stops in frame walls strictly according to state and local code. (Where applicable).

f. Install all blocking and grounds needed for hanging plumbing, bathroom accessories, molding, and all other items needing wall or ceiling substrate blocking.

g. Mortise nailers into framing wherever moldings are called for.

h. Subfloor sheathing shall be continuously mechanically fastened to the concrete slab.

i. Headers shall be packed with P.T. plywood solid to width of stud wall.

j. Apply soffits in long lengths to minimize joints.

k. Fine mesh insect screen shall be continuous over vent hole.

l. Glues shall be waterproof and non-staining.

m. Siding and trim nails shall not penetrate the surface more than 1/32” and shall be caulked smooth by the painter. Cement fiber board shall be nailed pneumatically with a flush mount attachment.

o. Install cement fiber board products strictly to manufacturer's installation Requirements. PROVIDE JOINT FLASHING BEHIND FIELD BUTT JOINTS per manufacturer's installation requirements.

p. Where Simpson Strong Tie connectors are specified strictly follow Simpson Strong Tie specifications for type, number, and size of fasteners.

Q. Embedment of Anchor Bolts: Anchor bolts shall be imbedded in concrete either at the pour or a minimum or seven (7) days after using gun grade two part epoxy such as QuickSet High Strength Anchoring Epoxy or Simpson Set-XP 10. If using the epoxy method follow the manufacturer's instructions for mixing and placing epoxy. Holes drilled for epoxy sets shall be drilled 1/4" larger than the anchor bolt and prepared for the epoxy by blowing and brushing debris completely from the hole. Once set, anchor bolts must be left undisturbed until cured. Only workmen experienced in mixing epoxy and placing anchor bolts shall do the work. See drawings for locations, sizes and conditions.

DIVISION 6C: FINISH CARPENTRY

1. GENERAL REQUIREMENTS

a. Include GENERAL CONDITIONS, SUPPLEMENTARY GENERAL CONDITIONS as part of this section.

b. RELATED SECTIONS: Division 1 GENERAL REQUIREMENTS; Division 6B, Rough Carpentry; Division 8A FRONT DOOR AND TRANSOM; Division 8C INTERIOR DOORS; Division 8E FINISH HARDWARE; Division 9A PAINT; Division 9B GYPSUM WALLBOARD; Division 10A BATHROOM ACCESSORIES; Division 16, ELECTRICAL.

c. Examine all other Sections of the Specifications for requirements that affect the work of this Section whether or not such work is specifically mentioned in this section.

d. Coordinate work with that of all other trades affecting or affected by the work of this section. Cooperate with such trades to assure the steady progress of all work under the contract.

2. SCOPE: Furnish and/or install all finish carpentry items including but not limited to window and door installation, decorative columns, casework, interior and exterior moldings, interior stairs and balustrades, and interior trim.

3. CODES: All carpentry work shall conform to the Florida Building Code, 2010, “Wood Construction".

4. QUALITY STANDARDS: Finish carpentry shall be installed by master finish carpenter and their helpers only. Framing carpenters may not install finish carpentry unless directly and full time supervised by a master finish carpenter. Where AWI standard apply, work shall conform to AWI Custom standards.

5. HANDLING AND STORAGE: All wood, plastic moldings, and other items specified herein shall be stored on site in a dry, ventilated location, off the ground, with a tarp covering at day’s end. Wood specified to be air dried shall be stacked with a minimum of 1” sticking between individual pieces. Interior millwork shall be accepted only when delivered dry, when the building is dried in, and when a suitably dry and protected area is available for storing it. All finish wood specified herein shall be stored on site in a dry, ventilated location, off the ground, with a tarp covering at day’s end. Wood specified to be air dried shall be stacked with a minimum of 3/4” sticking between individual pieces. Protect all work against damage during construction.

6. SUBMITTALS: Submit sample and/or manufacturer’s data of all components of moldings, and other items specified herein.

7. SCAFFOLDS: Furnish, install, and maintain for all the trades all necessary scaffolding, staging, and planking except as otherwise stipulated.

8. MATERIALS SCHEDULE

   a. <u>Interior Pocket Door</u>
      1) See Division 8A DOORS AND WINDOWS

   b. <u>Finish Hardware:</u>
      2) See Division 8: DOORS AND WINDOWS, and Division 10, SPECIALTIES.

   c. <u>Exterior Trim</u>: Consisting of bay window trim and casings, frieze boards, corners, fascias, belt trim, etc. shall be cement fiber board (CFB) as follows:
      1) HZ5 Fiber Cement Board by Hardie Systems or Composite TRIM by Miratek to sizes and thicknesses indicated on plans.
      2) Finish shall be smooth, both sides and ends; factory primed.

   d. <u>Eave Soffit Vents:</u>. Eave Vents shall be 1" wide slots in the soffit of the eave in locations indicated on the reflected ceiling plan and shall have a continuous rolled stainless steel 20/20 fine insect mesh cut to cover the inside face of the vent.

   e) <u>Prefabricated Columns:</u> See Division 6E PREFABRICATED COLUMNS.

   f) <u>Moldings:</u> See Division 6D MOLDINGS.

   g) <u>Interior Door and Window Trim</u>
      1) Bay Windows: 1 X Poplar.
      2) Other Windows: None (drywall returns)

3) All doors EXCEPT Vestibule and Family Room: 1X4 Poplar with poplar jamb extenders.

h) Casework: See Division 6F CASEWORK.

i) Glue for Finish Carpentry:
1) Glue for wood moldings and other wood finish items shall be Tite-Bond Type 2.
2) Glue for PVC items shall be Polyseamseal adhesive, or as approved by the Owner's Representative.

9. INSTALLATION

a) Finish woodwork shall be dressed and sanded, free from machine and tool marks, abrasion, raised grain, splice marks, and other defects on surfaces exposed to view.

b) Attach interior trim with 8d finish nails, set.

c) Joints shall be tight and so formed as to conceal shrinkage.

d) All nail heads in finished work shall be sunken 1/16" with nail set.

e) Woodwork shall be properly framed, closely fitted, and accurately set to the required lines and levels and shall be rigidly secured in place.

f) Fitting of doors and frames shall be done carefully. Sandpaper carefully, by hand, and leave finish free from all marks, roughness and imperfections. Remove and replace hardware as required for painting.

g) Install all weather-stripping and thresholds specified under DIVISION 10 FINISH HARDWARE.

h) Obtain from finish hardware supplier all hardware schedules, templates, and hardware samples for the correct installation of hardware.

i) Eave vents shall be securely fastened to achieve an unbroken insect barrier.

DIVISION 6D: MOLDINGS

1. GENERAL REQUIREMENTS

a. Include GENERAL CONDITIONS, SUPPLEMENTARY GENERAL CONDITIONS as part of this section.

b. RELATED SECTIONS: Division 1 GENERAL REQUIREMENTS; Division 6C Finish Carpentry; Division 9, FINISHES.

c. Examine all other Sections of the Specifications for requirements that affect the work of this Section whether or not such work is specifically mentioned in this section.

d. Coordinate work with that of all other trades affecting or affected by the work of this section. Cooperate with such trades to assure the steady progress of all work under the contract.

2. SCOPE: Furnish and install all exterior and interior moldings and trim. See drawings for locations and sizes.

3. QUALITY STANDARDS: Finish carpentry shall be installed by master finish carpenter and their helpers only. Framing carpenters may not install finish carpentry unless directly and full time supervised by a master finish carpenter.

4. HANDLING AND STORAGE: All moldings, and other items specified herein shall be stored on site in a dry, ventilated location, off the ground, on a perfectly flat surface, with a tarp covering at day's end. Protect all work against damage during construction. Moldings shall be delivered to the jobsite in rigid packaging with the manufacturer's name and address clearly marked on each package. Wood moldings shall be inspected upon delivery and, if free of warp, checking, knots, splits or other defects, shall be returned to their original packaging and stored in a dry air conditioned space off the floor time of installation. Moldings shall be handled by finish carpenters only.

5. SUBMITTALS: Submit 4" samples of all moldings, and data sheets for glues to be used for Owner's Representative's approval prior to ordering. Include matching manufacturer's installation data sheets.

6. MOCK-UP: Contractor shall construct a full size mock-up of the entablature (cornice, frieze and architrave. The mock-up shall be 18" in length and shall include the roof pitch and connection of roof sheathing to cornice crown. Crowns and other moldings shall be constructed of the specified shapes. All other materials shall be as called out on the drawings. See drawings for detail of mock-up.

7. LENGTHS: Contractor shall order lengths of moldings to minimize waste.

8. SCAFFOLDS: Furnish, install, and maintain for all the trades all necessary scaffolding, staging, and planking except as otherwise stipulated.

8. MATERIAL LIST:

a. Moldings and Casings: Consisting of exterior cornice crowns, belt trim water table, and bay window drip caps, and interior ceiling crowns, chair rail, bases, and door casings.

1) Exterior Moldings shall be manufactured by Azek Building Products or approved equal by Owner. See drawings for numbers and locations.

2) Interior Moldings: Shall be solid pine manufactured by WoodGrain Distribution Inc., Titusville, Titusville, Florida or approved equal by Owner and shall be as follows:

a) Crowns
Type C: 9/16"X5-1/4" No. F514

Type D: 9/16”X 4-1/4” No. 48

b) Bases
Type A (Family Room, and Vestibule): 1X4 Poplar with No. 166 11/16”X 1-1/4” Base Cap
Type B (Sexton’s Office, Archives, Storeroom, and Bathroom): 1X4 Poplar (WITHOUT CAP).

c) Chair Rail (Family Room Only):1-1/8”X 2-1/4” No. 392

d) Family Room Door Casings (Each Side) and Archives and Sexton’s Office Door Casings (Vestibule Side Only):
7/16” X 1-1/4” No. 937 Stop atop 1X4 poplar. See drawings for details.

e) Picture Mould (Sexton's Office and Archives only): 11/16" x 1-5/8" No. 272.

f) Front Door Casings: Interior and Exterior: By door manufacturer. See Division 8A DOORS.

b. Fasteners

1) Nails
a) Interior Wood Moldings: 16 or 18 GA. galvanized steel pin nails allowing 1” embedment into substrate..
b) Exterior Moldings: 18 GA stainless steel pin nails allowing 1-1/2” into blocking.

2) Glue
a) Interior Wood Moldings: Titebond II or approved equal by Owner.
b) Exterior Moldings: Water based Azek Adhesive Cement or approved equal by Owner.

9. INSTALLATION

a. Moldings may be installed only by experienced finish carpenters in possession of their own molding installation tools (coping saws, etc.). Carpenter helpers or framing carpenters may not install moldings but may assist the finish carpenter.

b. Interior moldings may not be installed until acclimated to air conditioned space.

c. Moldings shall be installed with a hand held pneumatic or electric finish nailer with a booted nose to prevent marring. Only master finish carpenters may hand nail moldings. Hammer bruises will result in rejection of the installation.

d. Fastening:

1) Interior Wood Moldings: Nails shall be 16 gauge galvanized pin nails set below surface of the molding and penetrating at least 1” into blocking or framing. All unset nails must be hand set.

2) Exterior Moldings: Nails shall be 16 gauge stainless steel pin nails set below surface of the molding and penetrating at least 1-1/2” into blocking or framing. All unset nails must be hand set.

e. Attach continuous wood blocking to wall studs behind all interior crowns.

f. Exterior crowns shall be backed by continuous pressure treated wood blocking cut to the exact angle of the crown molding and screwed to wood or concrete substrate. See drawings for details.

g. Outside molding corners shall be mitered and glued. Inside miters shall be coped and glued. All cuts shall be smooth; cover uniformly with glue.
PVC molding must be cut with carbide tip saws and miters (if applicable).

h. Butt joints shall be biased and glued. Unbiased butt joints will be rejected.

DIVISION 6E: PREFABRICATED COLUMNS

1. GENERAL REQUIREMENTS

   a. Include GENERAL CONDITIONS, SUPPLEMENTARY GENERAL CONDITIONS as part of this section.

   b. RELATED SECTIONS: Division 1 GENERAL REQUIREMENTS; Division 4, MASONRY; Division 5, STEEL; Division 6A, Rough Carpentry; Division 6B FINISH CARPENTRY; Division 9, FINISHES.

   c. Examine all other Sections of the Specifications for requirements that affect the work of this Section whether or not such work is specifically mentioned in this section.

   d. Coordinate work with that of all other trades affecting or affected by the work of this section. Cooperate with such trades to assure the steady progress of all work under the contract.

2. SCOPE: Furnish and install prefabricator columns as indicated on the drawings

3. QUALITY STANDARDS: Prefabricated columns shall be installed by master finish carpenter and their helpers only. Framing carpenters may not install finish carpentry unless directly and full time supervised by a master finish carpenter.

4. HANDLING AND STORAGE: Prefabricated columns shall be stored on site in a dry, ventilated location, off the ground, with a tarp covering at day's end. Protect columns against damage during construction.

5. SUBMITTALS: Submit manufacturer's data of all components of columns and glues for Architect's approval.

6. SCAFFOLDS: Furnish, install, and maintain for all the trades all necessary scaffolding, staging, and planking except as otherwise stipulated.

7. MANUFACTURER: Prefabricated columns shall be "Polystone I" by Chatsworth's Columns, Wilmington, NC (1 800 COLUMNS) or approved equal by Owner to the following specifications:

a. Style shall be Roman Doric, plain, Design No. 200, Tuscan, Plain.

b. Base diameter shall be nominal 14" (13-5/8"). Neck diameter shall be 12". Overall length of column shall be 9'-0", delivered.

c. Column shaft shall be smooth, plain and tapered. Bottom third of the shaft shall be straight with the remaining 2/3 tapering to the neck.

d. Column Capital and Base molding, shall be constructed of reinforced polyester resin and marble dust fiberglass, per Polystone specifications.

e. Columns shall be splits and will be delivered in six pieces per column, consisting of split base, shaft, and capital.

9. SUBMITTALS: Submit catalog cuts to the Owner's Representative for approval prior to ordering.

10. HANDLING AND STORAGE: Columns shall be delivered to the jobsite in rigid packaging with the manufacturer's name and address clearly marked on each package. Moldings shall be inspected upon delivery and, if free of warp, cracks, or other defects, shall be returned to their original packaging and stored in a dry air conditioned space off the floor until time of installation. Columns shall be handled by finish carpenters only.

11. INSTALLATION

a. Columns shall be installed within two weeks of delivery and shall be installed according to the manufacturer's instructions. Please note that columns left stacked and uninstalled can deform and warp over time. The general contractor shall be responsible for installing the columns before defects occur. IF COLUMNS WARP BEFORE INSTALLATION THE GENERAL CONTRACTOR SHALL BE RESPONSIBLE TO REORDER COLUMNS AT HIS EXPENSE.

b. Shafts will be cut to length to meet drawing requirements and site conditions after conferring with the architect before cutting lengths. <u>Surplus shall be cut from the bottom of the column shafts.</u>

c. Columns shall be installed around structural steel tubes and shall be joined and attached strictly following the manufacturer's specifications.

d. Joining, Gluing and Finishing Columns: Strictly follow manufacture's installation instructions. The contractor may use the manufacturer's Split Kit, which includes bands, brackets and Duo-Sil glue, or may use Loctite PL Premium Advanced Polyurethane Construction Adhesive.

e. After columns have been glued and cured the seams shall be prepared for paint so that when finished no evidence of the seam will be evident in bright sunlight. Columns not prepared in this manner will be rejected.

DIVISION 6F: STORAGE ROOM CABINETS, COUNTERTOP, AND SHELVING

1. Include GENERAL CONDITIONS, GENERAL REQUIREMENTS as part of this section.

2. Examine all other Sections of the Specifications for requirements that affect the work of this Section whether or not such work is specifically mentioned in this section.

3. CORDINATION: Coordinate work with that of all other trades affecting or affected by the work of this section. Cooperate with such trades to assure the steady progress of all work under the contract.

4. SCOPE: Furnish and install wall and base cabinets, countertop and all utility shelving. See drawings for layouts and details.

5. RELATED SECTIONS: Division 1 GENERAL REQUIREMENTS; Division 6 CARPENTRY AND MILLWORK, Division 9, FINISHES; Division 10, SPECIALTIES; Division 16, ELECTRICAL.

6. GUARANTEE

   a. Attention is directed to provisions in the GENERAL CONDITIONS regarding guarantees and warranties for work under this Contract.

   b. Manufacturers shall provide their standard guarantees for work under this Section. However such guarantees shall be in addition to, not in lieu of all other liabilities which manufacturers and the Contractor may have by law or by other provisions of the Contract Documents.

   c. GUARANTEE: Casework contractor shall guarantee casework and installation to be free of defects in materials and workmanship for a period of one year from the date of the city's Certificate of Occupancy of the house.

7. SUBMITTALS: The contractor shall provide the following samples for the Owner's Representative's approval:

   1) Shop drawings for all casework. Shop drawings shall be prepared to scale by qualified and experienced draftsmen and shall be to scale, ½"=1'-0" and shall show all details required by the architect for approval.

   2) Samples: Finished cabinet doors, and cabinet hardware.

   3) Data Sheets: Cabinet manufacturer's specifications, hardware and lighting hardware sheets.

8. PROTECTION: Protect all work against damage during construction. Provide and lay all building paper required to protect finished floors.

9. QUALITY STANDARDS: Finish carpentry shall be installed by master finish

carpenter and their helpers only. Framing carpenters may not install finish carpentry unless directly and full time supervised by a master finish carpenter. Where AWI standard apply, work shall conform to AWI Custom standards.

10. HANDLING AND STORAGE:

    a. Casework shall be accepted only when delivered dry, when the building is dried in, and when a suitably dry and protected area is available for storing it. All finish wood specified herein shall be stored on site in a dry, ventilated location, off the ground, with a tarp covering at day's end. Protect all work against damage during construction.

    b. All materials shall be delivered to site in sizes that can be passed through a 3'-0"x 6'-8" opening. Delivery and storage of all materials shall be done under dry conditions. Material is to be stored on site, within a protected air conditioned space, and covered with furniture blankets until ready for installation. All casework shall be inspected upon delivery and shall not be accepted unless free from mars, scratches, damages and other defects.

11. FIELD DIMENSIONS: The casework contractor is responsible for taking all field dimensions necessary to assure a true and proper fit of all casework to field conditions.

12. TEMPLATES: The General Contractor shall provide the casework fabricator with all necessary templates and data sheets to be able to install all appliances and plumbing fixtures.

13. FILLERS: Provide filler pieces and scribe molds for closures against all walls where cabinets do not abut tightly.

B. MATERIALS:

1. CONSTRUCTION: Cabinets shall be flush of overlay construction (European). Cabinet carcass components including cabinet ends, bottom, tops, shelves, stretchers, toe kicks, and backs shall be ¾" thick plywood. End panels of base cabinets shall stop 3-1/2" above the floor. Drawer boxes shall be built with 5/8" thick hardwood with dovetailed corner joints to be mounted on full extension under mount drawer glides.

2. CABINET SHELVES: Provide two MDF shelves for all base cabinets and three half-shelves at wall cabinets. Shelves shall be adjustable. Shelves shall be plastic laminate finish, all surfaces.

3. DOORS, DRAWER FRONTS, VALANCE AND TOE KICK: All shall be flush 3/4" MDF with plastic laminate finish.

4. UTILITY SHELVES AND VERTICAL DIVIDERS: Provide shelves as indicated on the drawings. Shelves shall be constructed of 1" plywood with plastic laminate

top, nosing and underside. See drawings for details. Shelves shall be supported with Knape and Vogt 85 series heavy duty adjustable shelf standards and 185 Series heavy duty shelf brackets. Color shall be white.

5. PLASTIC LAMINATE: Formica Faux Gauze, Matte finish.

7. CABINET AND DRAWER INTERIORS: Cabinet interiors shall be maple plywood with roll coat clear finish.

8. HARDWARE: Provide the following base cabinet hardware:

   a. Hinges: Blum 33

   b. Drawer Glides: Blum Full Extension Under Mount

   c. Drawer Pulls: Top Knob with Satin Chrome finish.

   d. Door Handles: Top Knob with Satin Chrome finish.

9. COUNTERTOP AND BACKSPLASH FOR BASE CABINET

   a. Countertop: Substrate: 3/4" plywood with 1-1/2" nosing. Back side of substrate shall be laminated with liner grade laminate to equalize veneer stresses. Finish top and front.

   b. Backsplash shall be 3/4"X4" plywood and shall be fabricated integrally with the countertop. Finish top and front.

   c. Countertop Finish: Plastic Laminate: Formica Faux Gauze, Matte Finish with Formica Ideal Bull nose Edge.

   d. Back Splash: Formica Faux Gauze, Matte Finish.

C. INSTALLATION:

1. CABINETS

   a. Verify layout
      1) Plumbing
      2) Structural
      3) Window and door clearances.
      4) Bring errors to the designer's attention immediately.
   b. Verify Level and Plumb:
      1) Ceilings and floors out beyond ¼" in 10' should be adjusted prior to installation; Walls out beyond ¼" in 8' .
      2) Verify structural members cabinets to which they are attached.
   c. Install backs and grounds securely.
   d. Verify wall furring relative to cabinet widths.
   e. Open boxes; Inspect cabinets for damage and correct order per layout.
   f. Install cabinet consistent plumb, level, true and straight with no distortions. Shims are to be concealed.

g. Install cabinet level so that all shimming is done at floor and covered by kick. Do not shim at countertop. Level base cabinets with shims. In no event, however, are the cabinets to be shimmed greater than 5/8".

h. Cabinet must be attached through structural skeleton of the cabinet. No attachments may be made through cabinet back sheathing. Cabinets shall be secured to walls with wood screws provided with wood 1X4 wood grounds secured to CMU walls with tapcons. Cabinets shall be through bolted together with 5/16" diameter bolts, 1-1/4" diameter washers, lock washers, and nuts. All securing hardware shall be placed no greater than 12" on center.

i. Also read manufacturers spec for attachment for screw size and placement, but generally no further from corners than 4".

j. Scribe and cut in order to fit with other finished work. Secure to grounds and blocking with countersunk concealed fasteners.

k. Provide chases and holes as necessary to allow installation of plumbing fixtures.

l. Install toe kick base after shimming.

m. Adjust and lubricate all hardware so that the doors and drawers operate quietly and smoothly and that sightlines are even, straight and plumb.

n. Following installation casework shall be carefully cleaned and buffed. All tapes, labels, and markings shall be removed.

2. COUNTERTOP AND BACKSPLASH

a. Inspect materials and location of installation for conditions affecting performance of work in accordance with shop drawings.

b. Proceed with installation only after unsatisfactory conditions have been corrected.

c. Cure laminate countertops for 24 hours, minimum, before installation.

d. Field cut countertop and backsplash as required for plumbing fixtures. Scribe to end walls.

e. Screw countertop to base cabinet from below with wood screws 12" o.c.

f. Seal the seam between the backsplash and the wall with silicone caulk matching the color of the backsplash.

g. Remove adhesives, sealants and other stains.

h. Protect installed wall from damage. Repair or replace damaged work, to Owner's Representative's satisfaction.

3. UTILITY SHELVING:

a. Provided solid wood grounds for standards at partition and 2" masonry screws at exterior wall connections.

b. See drawings for spacing and layout of all components.

DIVISION 6G: CASEWORK - ALTERNATE NO. 3

A. GENERAL

1. Include GENERAL CONDITIONS, GENERAL REQUIREMENTS as part of this section.

2. Examine all other Sections of the Specifications for requirements that affect the work of this Section whether or not such work is specifically mentioned in this section.

3. COORDINATION: Coordinate work with that of all other trades affecting or affected by the work of this section. Cooperate with such trades to assure the steady progress of all work under the contract.

4. SCOPE: Furnish and install all cabinetry. See drawings for layouts and details.

5. RELATED SECTIONS: Division 1 GENERAL REQUIREMENTS; Division 6 CARPENTRY AND MILLWORK, Division 9, FINISHES; Division 10, SPECIALTIES; Division 16, ELECTRICAL.

6. GUARANTEE

a. Attention is directed to provisions in the GENERAL CONDITIONS regarding guarantees and warranties for work under this Contract.

b. Manufacturers shall provide their standard guarantees for work under this Section. However such guarantees shall be in addition to, not in lieu of all other liabilities which manufacturers and the Contractor may have by law or by other provisions of the Contract Documents.

c. GUARANTEE: Casework contractor shall guarantee casework and installation to be free of defects in materials and workmanship for a period of one year from the date of the city's Certificate of Occupancy of the house.

7. SUBMITTALS: The contractor shall provide the following samples for the Owner's Representative's approval:

1) Shop drawings for all casework. Shop drawings shall be prepared to scale by qualified and experienced draftsmen and shall be to scale, ½"=1'-0" and shall show all details required by the architect for approval.

2) Samples: Finished cabinet doors, and cabinet hardware.

3) Data Sheets: Cabinet manufacturer's specifications, hardware and lighting hardware sheets.

8. PROTECTION: Protect all work against damage during construction. Provide and lay all building paper required to protect finished floors.

9. QUALITY STANDARDS: Finish carpentry shall be installed by master finish carpenter and their helpers only. Framing carpenters may not install finish carpentry unless directly and full time supervised by a master finish carpenter. Where AWI standard apply, work shall conform to AWI Custom standards.

10. HANDLING AND STORAGE:

a. Casework shall be accepted only when delivered dry, when the building is dried in, and when a suitably dry and protected area is available for storing it. All finish wood specified herein shall be stored on site in a dry, ventilated location, off the ground, with a tarp covering at day's end. Protect all work against damage during construction.

b. All materials shall be delivered to site in sizes that can be passed through a 3'-0"x 6'-8" opening. Delivery and storage of all materials shall be done under dry conditions. Material is to be stored on site, within a protected air conditioned space, and covered with furniture blankets until ready for installation. All casework shall be inspected upon delivery and shall not be accepted unless free from mars, scratches, damages and other defects.

11. FIELD DIMENSIONS: The casework contractor is responsible for taking all field dimensions necessary to assure a true and proper fit of all casework to field conditions.

12. TEMPLATES: The General Contractor shall provide the casework fabricator with all necessary templates and data sheets to be able to install all appliances and plumbing fixtures.

13. FILLERS: Provide filler pieces and scribe molds for closures against all walls where cabinets do not abut tightly.

B. MATERIALS:

1. CONSTRUCTION: All cabinetry shall be face frame style with 1-1/2" stile and rail framing with full overlay doors and drawer fronts. All cabinet carcass components including cabinet ends, bottoms, tops, shelves, stretchers, toe kicks, and backs shall be ¾" thick, Maple veneer Plywood. All cabinet trims shall be Northern Hard maple. Drawer boxes shall be built with 5/8" thick hardwood with dovetailed corner joints to be mounted on full extension under mount drawer glides. End panels of base cabinets shall stop 3-1/2" above the floor.

2. SHELVES: Provide two shelves for all base cabinets and three half-shelves at wall

cabinets.

3. DOORS AND DRAWER FRONTS: Door and drawer fronts shall be Conastoga 3/4” MDF with raised panels.

4. VALANCE AND TOE KICK: Valance and toe kick shall be plastic laminate on 3/4" MDF.

5. CABINET INTERIORS: All cabinet interiors shall have a roll coat clear finish.

6. EXTERIOR VISIBLE SURFACES: All exterior surfaces shall have a pigmented conversion varnish with two clear, 15% sheen top coats for durability.
Color shall be:

7. HARDWARE: Provide the following hardware:

   a. Hinges: Blum 33

   b. Drawer Glides: Blum Full Extension Under Mount

   c. Drawer Pulls: Top Knob with Satin Chrome finish.

   d. Door Handles: Top Knob with Satin Chrome finish.

8. COUNTERTOP AND BACKSPLASH:

   a. Substrate: 3/4” plywood with 1-1/2” nosing. Back side of substrate shall be laminated with liner grade laminate to equalize veneer stresses. Finish top and front.

   b. Backsplash shall be 3/4”X4” plywood and shall be fabricated integrally with the countertop. Finish top and front.

   c. Countertop Finish: Plastic Laminate: Formica Faux Gauze, Matte Finish with Formica Ideal Bull nose Edge.

   d. Back Splash: Formica Faux Gauze, Matte Finish.

C. INSTALLATION:

1. CABINETS

   a. Verify layout
      1) Plumbing
      2) Structural
      3) Window and door clearances.
      4) Bring errors to the designer’s attention immediately.
   b. Verify Level and Plumb:
      1) Ceilings and floors out beyond ¼” in 10’ should be adjusted prior to installation; Walls out beyond ¼” in 8’.
      2) Verify structural members cabinets to which they are attached.

c. Install backs and grounds securely.

d. Verify studs and furring relative to cabinet widths.

e. Open boxes; Inspect cabinets for damage and correct order per layout.

f. Install cabinets consistent plumb, level, true and straight with no distortions. Shims are to be concealed.

g. Install base cabinets level so that all shimming is done at floor and covered by kick. Do not shim at countertop. Level base cabinets with shims. In no event, however, are the cabinets to be shimmed greater than 5/8".

h. Base and Uppers must be attached through structural skeleton of the cabinet. No attachments may be made through cabinet back sheathing. Cabinets shall be secured to walls with wood screws provided with wood 1X4 wood grounds secured to CMU walls with tapcons. Cabinets shall be through bolted together with 5/16" diameter bolts, 1-1/4" diameter washers, lock washers, and nuts. All securing hardware shall be placed no greater than 12" on center.

i. Also read manufacturers spec for attachment for screw size and placement, but generally no further from corners than 4".

j. Scribe and cut in order to fit with other finished work. Secure to grounds and blocking with countersunk concealed fasteners.

k. Provide chases and holes as necessary to allow installation of plumbing fixtures.

l. Install toe kick base after shimming.

m. Adjust and lubricate all hardware so that the doors and drawers operate quietly and smoothly and that sightlines are even, straight and plumb.

n. Following installation casework shall be carefully cleaned and buffed. All tapes, labels, and markings shall be removed.

2. COUNTERTOP AND BACKSPLASH

a. Inspect materials and location of installation for conditions affecting performance of work in accordance with shop drawings.

b. Proceed with installation only after unsatisfactory conditions have been corrected.

c. Cure laminate countertops for 24 hours, minimum, before installation.

d. Field cut countertop and backsplash as required for plumbing fixtures. Scribe to end walls.

e. Screw countertop to base cabinet from below with wood screws 12” o.c.

f. Seal the seam between the backsplash and the wall with silicone caulk matching the color of the backsplash.

g. Remove adhesives, sealants and other stains.

h. Protect installed wall from damage. Repair or replace damaged work, to Owner’s Representative’s satisfaction.

DIVISION 7A: V-CRIMP ROOF PANELS

A. GENERAL REQUIREMENTS

1. Include GENERAL CONDITIONS, SUPPLEMENTARY GENERAL CONDITIONS as part of this section.

2. RELATED SECTIONS: Division 1 GENERAL REQUIREMENTS; Division 6A PRE-ENGINEERED TRUSSES; Division 6B ROUGH CARPENTRY; Division 7C CAULKING AND SEALANTS; Division 15B HEATING VENTILATION AND AIR CONDITIONING.

3. Examine all other Sections of the Specifications for requirements that affect the work of this Section whether or not such work is specifically mentioned in this section.

4. Coordinate work with that of all other trades affecting or affected by the work of this section. Cooperate with such trades to assure proper sequencing and the steady progress of all work under the contract.

5. SCOPE: Provide all labor, materials, equipment services, and transportation required to complete all metal V-Crimp roofing as specified herein and indicated on the drawings.

6. QUALITY ASSURANCE:

a. Roofing and Sheet Metal materials and installation shall conform to the 2010 Florida Building Code latest edition, in particular to "Installation of Roof Coverings”, and to SMCA standards of Construction..

b. Roof work is to be done by a Florida Licensed roofing Contractors with ten (10) years minimum experience installing metal panel roofs.

c. Provide materials of standard factory fabrication as much as possible. Fabrication shall be for waterproof and weather resistant performance, with expansion provisions for running work, sufficient to permanently prevent leakage, damage.

7. SUBMITTALS:

a. Contractor shall submit to the Owner's representative for his approval, data sheets and samples of the roof panels, fasteners, and membrane.

8. DELIVERY, STORAGE AND HANDLING

a. Products shall be delivered in original, unbroken packages, containers, or bundles bearing the name of the manufacturer.

b. Upon receipt of panels and other materials, contractor shall examine the shipment for damage and completeness.

c. All materials shall be stored in a clean dry location. Panels shall have one end elevated to allow moisture to run off. Edges shall be protected. Panels showing edge rust will be rejected.

d. Stack all materials to prevent damage and allow for adequate ventilation.

9. GUARANTEE

a) Attention is directed to provisions in the GENERAL CONDITIONS regarding guarantees and warranties for work under this Contract.

b) Manufacturers shall provide their standard guarantees for work under this Section. However such guarantees shall be in addition to, not in lieu of all other liabilities which manufacturers and the Contractor may have by law or by other provisions of the Contract Documents.

c) Roof shall be bonded for 20 years from time of Substantial Completion.

B. MATERIALS

1. Panels: New roof shall be prefinished 26 gauge steel "Five V-Crimp" Galvalume panels. Panels and seams shall be cold-rolled in contiguous lengths. Panels must come from the same lot. An installation of panels with different shades of metal will be rejected.

2. Membrane: Membrane shall be thirty pound asphalt-impregnated felts, mechanically fastened to the roof sheathing, or MFM Building Products Co. (Coshocton, OH) "Peel and Seal" self stick aluminum roll roofing. If peel and stick roofing is used it must be installed strictly according to the manufacturer's instructions.

3. Accessories and Flashing: All accessories and metal flashing shall be Galvalume, Flashing shall be 26 GA. unless otherwise indicated on the plans and shall match the panels in color and finish. See drawings for size of eave drip.

4. Roofing Screws shall be 1-1/2 "in length and shall have integral rubber washers.

5. Ridge: Shall be FLAT 12"wide, 26 gauge Galvalume.

6. Sealants: All sealants must meet AAMA 800 or ASTM C920 Class 25 grade NS or ASTM C1281 or AAMA 812 as applicable

C. INSTALLATION:

1. Panels shall run from eave to ridge without break.

2. Metal panels must be installed with ten days of placement of membrane.

3. Preparation of roof sheathing to receive metal panels, including dry-in membrane shall conform strictly to roof panel manufacturer's recommendations, and to local governing codes.

4. Roofing screws shall penetrate only at vees and shall meet FBC 155 mph standards.

5. Metal roof insulation shall not be considered finished until all hand, foot, and other smudges, and other defacements are 100% removed.

DIVISION 7B: METAL SHINGLE ROOF - ALTERNATE NO. 1

A. GENERAL REQUIREMENTS

1. Include GENERAL CONDITIONS, SUPPLEMENTARY GENERAL CONDITIONS as part of this section.

2. RELATED SECTIONS: Division 1 GENERAL REQUIREMENTS; Division 6A PRE-ENGINEERED TRUSSES; Division 6B ROUGH CARPENTRY; Division 7C CAULKING AND SEALANTS; Division 15B HEATING VENTILATION AND AIR CONDITIONING.

3. Examine all other Sections of the Specifications for requirements that affect the work of this Section whether or not such work is specifically mentioned in this section.

4. Coordinate work with that of all other trades affecting or affected by the work of this section. Cooperate with such trades to assure proper sequencing and the steady progress of all work under the contract.

5. SCOPE: Provide all labor, materials, equipment services, and transportation required to complete all metal shingle roofing as specified herein and indicated on the drawings.

6. QUALITY ASSURANCE:

a. Roofing and Sheet Metal materials and installation shall conform to the 2010 Florida Building Code latest edition, in particular to "Installation of Roof Coverings“, and to SMCA standards of Construction..

b. Roof work is to be done by a Florida-licensed roofing Contractors with ten (10) years minimum experience installing metal shingle roofs.

c. Provide materials of standard factory fabrication as much as possible. Fabrication shall be for waterproof and weather resistant performance, with expansion provisions for running work, sufficient to permanently prevent leakage, damage.

7. SUBMITTALS:

a. Contractor shall submit to the Owner's representative for his approval, data sheets and samples of the roof shingles, fasteners, and membrane.

8. DELIVERY, STORAGE AND HANDLING

a. Products shall be delivered in original, unbroken packages, containers, or bundles bearing the name of the manufacturer.

b. Upon receipt of shingles and other materials, contractor shall examine the shipment for damage and completeness.

c. All materials shall be stored in a clean dry location. Shingles shall have one end elevated to allow moisture to run off. Edges shall be protected. Shingles showing edge rust will be rejected.

d. Stack all materials to prevent damage and allow for adequate ventilation.

9. GUARANTEE

a. Attention is directed to provisions in the GENERAL CONDITIONS regarding guarantees and warranties for work under this Contract.

b. Manufacturers shall provide their standard guarantees for work under this Section. However such guarantees shall be in addition to, not in lieu of all other liabilities which manufacturers and the Contractor may have by law or by other provisions of the Contract Documents.

c. Roof shall be bonded for 20 years from time of Substantial Completion.

B. MATERIALS

1. SHINGLES:

a. Shingles shall be preformed, prefinished 24 gauge steel, Class A Fire Rated Galvalume shingles, ASTM 792-86 AZ-55, manufactured by Berridge Manufacturing Company, Houston, Texas or approved equal by Owner.

b. Style shall be "Victorian".

c. Shingles shall have strippable film applied to the top side of the shingle during fabrication.

d. Each shingle shall have 9"x12" exposure to weather.

e. Shingles shall be of overlapping interlocking design, fastened to solid substrate with concealed fasteners.

2. FLASHING: All flashing details are either exactly from the Berridge detail sheets or are adapted from them. See the drawings for these details.

a. Metal flashing shall be 26 Ga. Galvalume and shall match the shingles in finish and shall consist of eave flashing, edge trim, wall flashing, ridge flashing to the following sizes, or as indicated on the drawings:

1) Eave Flashing and Edge Trim: 6" under shingle, with 1-1/2" drip, except at turret steeples where roofer is to consult architect regarding historic accuracy.

2) Wall Flashing: 8" min. under shingle and to closest masonry joint but not less than 3" nor more than 6" to weather and to a 2" deep reglet. Cut reglet into concrete if necessary to meet this requirement.

3) Ridge and Hip Flashing: 12" flat 24 GA. per drawings.

4) Flashing is to be protected while in storage to keep it dry at all times.

5) Rusted metal flashing will not be accepted under any circumstances.

3. FASTENERS

a. Unless otherwise indicated all fasteners shall be hot-dipped galvanized steel. Screws shall be 1-1/2" in length unless the plywood alternate is accepted in which case they shall be 2-1/2 inches in length.

4. MEMBRANE UNDERLAYMENT

a. Underlayment shall be 30 LB Grace Water and Ice Shield "Peel and Seal" OR GAF Everguard Freedom TPO.

5. SEALANTS:

a. <u>At Roof Flashing and Gutters:</u> Dap Premium Polyurethane Roof and Flashing Sealant.

b. <u>Epoxy Seam Sealer</u>: Non corrosive metal seam cementing compound recommended by gutter manufacturer for non-moving parts including riveted joints.

c. <u>Mastic Sealant</u>; SSPC-paint 12, solvent type bituminous mastic nominally free of sulfur, compounded for 15 mil dry film thickness per coat.

6. ROOFING CEMENT: ASTM D2822, asphaltic.

7. FLASHING BARRIER: Furnish and install flashing barrier between opposing metals and/or between metals and ACQ lumber to prevent galvanic reactive

corrosion. Flashing barrier shall be "Deck Flash" by Cofair Products, Inc., Glenview, IL or approved equal by Owner. Install according to manufacturer's instructions.

C. INSTALLATION

1. SUBSTRATE:

a. Examine existing roof sheathing for damage, projections, soft spots, and other conditions requiring attention in the preparation for underlayment application, and repair and prepare accordingly. Report to Owner's Representative all areas requiring repair under the SF allowance. Upon the Owner's Representative's approval commence repair work on these areas.

b. Where applicable, verify roof openings, curbs, pipes, sleeves, ducts and vents through roof are solidly set, cant strips and reglets in place and nailing strips located.

2. UNDERLAYMENT

a. Underlayment shall be installed strictly to membrane manufacturer's recommendation.

3. SHINGLES:

a. General:

1) Comply with shingle manufacturer's installation instructions and recommendations and with all standards set forth in the Architectural Sheet Metal Manual published by SMACNA, in order to achieve a watertight installation.

2) Roof shall meet ASCE 7-05 Category C 150 mph wind load.

3) Furnish Key West Building Department with manufacturer's NOAs as required for roof permit.

b. Install shingles in such a manner that horizontal lines are true and level and vertical lines are plumb.

c. Install starter and edge trim, and gutter straps before installing shingles.

d. Remove protective strippable film prior to installation of roof shingles.

e. Attach shingles using manufacturer's standard clips and fasteners, spaced according to manufacturer's recommendations.

f. Do not allow shingles to come into contact with dissimilar materials.

g. Do not allow traffic on completed roof.

h. Remove and replace any shingles or components that are damaged beyond successful repair.

i. Cleaning: Clean all grease, finger marks, stains or other marring of shingles before submitting for final payment. Metal roof insulation shall not be considered finished until all hand, foot, and other smudges, and other defacements are 100% removed.

DIVISION 7C: CAULKING AND SEALANTS

1. GENERAL REQUIREMENTS

1. SCOPE: Furnish and install caulking and sealants as required by all trades and good industry practice.

2. DEFINITIONS: For the purpose of this specification the terms caulking and sealant shall be used interchangeably.

3. QUALITY ASSURANCE: Manufacturers shall be as specified herein or approved equal by Owner subject to compliance with project requirements.

4. RELATED SECTIONS: Division 1 GENERAL REQUIREMENTS; 6A and 6B ROUGH AND FINISH CARPENTRY, Division 7A METAL ROOFING; Division 7C BUILDING FLASHING; All of Division 8 and Division 9, Division 15A PLUMBING, and Division 15B HVAC.

5. SUBMITTALS:

a. Provide manufacturer's data sheets for all caulking and sealants including catalog cuts and application instructions.

b. Submit a detailed list of all locations where materials will be used.

6. WARRANTY

a. Attention is directed to provisions in the GENERAL CONDITIONS regarding guarantees and warranties for work under this Contract.

b. Manufacturers shall provide their standard guarantees for work under this Section. However such guarantees shall be in addition to, not in lieu of all other liabilities which manufacturers and the Contractor may have by law or by other provisions of the Contract Documents.

7. STORAGE AND PROTECTION: Products shall be delivered in original, unbroken packages, containers, or bundles bearing the name of the manufacturer. Caulking and Sealants shall be carefully stored and completely protected while in storage and during application to keep it dry at all times.

B. MATERIALS

1. All sealants and caulking shall be gun grade.
2. Products shall be recommended by the manufacturer for the application indicated.
3. EXTERIOR SEALANT

   a. At Windows and Doors, around Bay Window Eave Rafters : DAP Premium Polyurethane Adhesive Sealant. Color to match Window, Door Frame, and color of Eave Rafters

   b. At Roof Flashing: Dap Premium Polyurethane Roof and Flashing Sealant. Color to match Flashing.

   c. At Reglet above Bay Window: DAP Premium Polyurethane Adhesive Sealant. Color to match Stucco Color.

4. INTERIOR CAULKING

   a. At all Trim, Casings and Moldings and Interiors Generally: DAP Dynaflex 230 Premium Elastomeric Sealant

   b. In Bathrooms Generally: DAP Kwik Seal Plus Premium Kitchen and Bath Adhesive Caulk with Microban, color to be selected by the Owner's Representative.

5. PRIMER FOR ELASTOMERIC SEALANTS DURING WET OR HUMID CONDITIONS: Quick drying type according to sealant manufacturer's written instructions.

6. BOND BREAKERS: Of the type and consistency recommended by the caulk or sealant manufacturer.

7. JOINT BACKER AND PREFORMED JOINT FILLERS: Fiberglass roving, neoprene, butyl, polyurethane, vinyl, or polyethylene foams free of oil or other staining elements.

8. CAULK AND SEALANT COLOR: Where caulk and/or sealant cannot be painted provide colored caulk to match adjoining surfaces as approved by the Owner's Representative.

9. CLEAN-UP AND CLEAN-UP SOLVENTS: As recommended by sealant or caulking manufacturer, such as DAP Caulk-Be-Gone.

C. INSTALLATION

1. See installation provisions under other Divisions.

2. Caulking and sealants shall be applied strictly to the manufacturer's instructions or recommendations for the application specified...

3. Joints and spaces to be caulked shall be clean, dry, free from dust, and primed

according to manufacturer's instructions. Clean surfaces with solvent to remove all surface oils.

4. Caulking compounds shall generally be applied by means of a hand gun. Exercise care to prevent smearing of adjacent surfaces. Use sufficient pressure to fill all voids and joints solidly.

5. Provide joint backing rod in all joints wider than 3/8". Failure of caulking or sealants to hold because of the absence of joint backing will result in the caulking being removed, the joint being thoroughly cleaned and prepared, backing installed and re-caulking at the Contractor's expense.

6. Caulk joints before final coat of stain or paint is applied to adjacent surfaces. Allow to cure per manufacturer's instruction before painting.

7. Allow caulk to dry fully before exposing to weather. Contractor shall plan accordingly.

8. Thresholds of exterior doors shall be set in a bed of exterior sealant not less than 3/8" thick. Clean off excess compound after installing.

9. Use clean-up compound recommended by the manufacturer of the compound being used.

10. Tool joints or apply sealant so that exposed sealants are free of wrinkles and sags and are left slightly convex. Completely fill joints.

DIVISION 7D: BUILDING INSULATION

A. GENERAL REQUIREMENTS

1. SCOPE: Furnish and install building insulation at entire building envelope and interior partitions. See drawings for locations.

2. DEFINITIONS: For the purpose of this specification the terms caulking and sealant shall be used interchangeably.

3. QUALITY ASSURANCE: Manufacturers shall be as specified herein, or as accepted by the Architect, subject to compliance with project requirements.

4. RELATED SECTIONS: Division 1 GENERAL REQUIREMENTS; 6A and 6B ROUGH AND FINISH CARPENTRY, Division 7A METAL ROOFING; Division 7B SINGLE PLY ROOF; Division 7C BUILDING FLASHING; All of Division 8 and Division 9, Division 15A PLUMBING, and Division 15B HVAC.

5. SUBMITTALS:

   a. Provide manufacturer's data sheets for all insulation for Owner's approval prior to ordering.

6. WARRANTY

a. Attention is directed to provisions in the GENERAL CONDITIONS regarding guarantees and warranties for work under this Contract.

b. Manufacturers shall provide their standard guarantees for work under this Section. However such guarantees shall be in addition to, not in lieu of all other liabilities which manufacturers and the Contractor may have by law or by other provisions of the Contract Documents.

7. STORAGE AND PROTECTION:

a. Products shall be delivered in original, unbroken packages, containers, or bundles bearing the name of the manufacturer. Caulking and Sealants shall be carefully stored and completely protected while in storage and during application to keep it dry at all times.

b. Insulation shall be completely protected while in storage and during application to keep it dry at all times. Insulation shall be stacked on pallets at least 4" above the existing slab. Wet, damp, or damaged insulation may not be installed under any circumstances.

B. MATERIALS

1. Batt Insulation: Batt insulation in attic and exterior walls. See plans for R Values.

2. Sound Attenuation Batt Insulation in Partitions: Sound attenuation batts shall be thickness of partition and shall be Owens Corning Sound Attenuation Batt Insulation or approved equal by Owner.

3. Rigid Insulation: Rigid insulation shall be thick Owens Corning polyisocyuranate, foil-faced, foil to outside or approved equal by Owner to required thickness.

C. INSTALLATION:

1. BATT INSULATION:

a. Scope: Install thermal; batt insulation at roof and sound batts at interior partitions

b. Insulation shall be installed solely by an experienced insulation contractor.

c. Roof: Batt insulation shall be loosely laid between ceiling joists with foil side up. Use double layers if preferred. Lap joints in adjacent layers. Do not pack down.

d. Thickness shall be determined by the R values indicated on the drawings unless otherwise indicated.

2. RIGID INSULATION:

a. Scope: Install rigid insulation at exterior walls.

b. Rigid insulation shall be cut to snugly fit between furring members. The reflective side shall face the weather side of the house.

DIVISION 8A: HARDWOOD FRONT DOOR AND TRANSOM--BASE BID

1. GENERAL REQUIREMENTS

a. Include GENERAL CONDITIONS, SUPPLEMENTARY GENERAL CONDITIONS as part of this section.

b. RELATED SECTIONS: Division 1 GENERAL REQUIREMENTS; Division 3, Concrete; Division 4A, MASONRY; Division 6B ROUGH CARPENTRY; Division 6C FINISH CARPENTRY; Division 7D INSULATION; Division 8e FINISH HARDWARE; Division 9A PAINT; Division 9B GYPSUM WALLBOARD; Division 9C STUCCO.

c. Examine all other Sections of the Specifications for requirements that affect the work of this Section whether or not such work is specifically mentioned in this section.

d. Coordinate work with that of all other trades affecting or affected by the work of this section. Cooperate with such trades to assure the steady progress of all work under the contract.

e. SCOPE: Provide solid white oak paneled front door and integral transom, threshold, weather stripping, and all interior and exterior casings (trim). See drawings for details.

f. SUBMITTALS: Submit manufacturer's door and hardware data sheets, shop drawings, and finish samples for doors and hardware for Owner’s Representative approval.

g. SHIPPING AND HANDLING AND STORAGE: All materials shall be delivered to site in original packages or containers bearing manufacturer's brand name, type of material, and applicable standard designation. Delivery and storage of doors shall be done under dry conditions. Handle unfinished doors with clean hands or gloves. Doors stored at the job site must be sealed.

h. DOOR FINISH: Door, transom, frame, and casings will be either stained and varnished or painted per color selection by Owner. Door and transom will be stained and varnished on both sides per color selection by Owner; frame and casings will be painted high gloss WHITE on both sides. See Division 9A PAINT for painting details; Division 9G d VARNISH FINISHING.

2. MATERIALS

a. MATERIALS: All wood material shall be paint grade White Oak.

b. DESIGN: Raised Panel. See drawings for design.

c. QUALITY STANDARDS: Components must meet AWI Quality Standards for Custom construction.

d. CONSTRUCTION

1. Door
   a) Door shall be of raised panel construction to proportions shown on the drawings, conforming to AWI Custom standards or better. See drawings for profile of panel, sticking, and sizes of rails and stiles.
   b) Rails and stiles shall be blind doweled. Bottom rail shall be rabbeted. Glue shall be Resorcinal 150 g including hardener (Pencolite Adhesive G-1131) or approved equal by Owner.
   c) Panels shall float between sticking.
   d) Sticking shall be back sanded to prevent “white lining”.
   e) Door shall be 1-3/4" thick, beveled 3/32” at strike side.
   f) Door shall be constructed without predrilled lock bores.
   g) Doors shall be pre-hung with 1-1/2 pair of 4" square cornered Architectural grade ball bearing hinges with security studs. Finish: brushed nickel.
   h) Swing shall be left hand out swing.

2. Transom
   a) Sash: Full 180 degree round top; 1-3/8" thick White Oak with 1/4" wood stops with brass screws.
   b) Muntin Bars: 9/16" Ogee T-mullions with wood stops and brass screws.
   c) Glass: Clear, fixed 1/8" authentic divided lites.

3. Frame
   a) Frame shall be constructed of 6/4 White Oak. Frames and threshold shall have fully rebated strikes and be fully kerfed for weather stripping.

4. Weather Stripping
   a) Material and Manufacturer: Schlegel Q-Lon model QEBD-650. Weather stripping or as approved by the owner’s representative. Color shall be White.

5. Threshold
   a) Material: White Oak 1-3/4" x 9-5/8" per drawing profile

6. Moldings: (See Drawings for profiles and details)
   a) Brick molding, exterior, interior trim, panel stops, stops, and covers: White Oak, see drawings for profiles.

7. Finish Hardware (See also DIVISION 8E Finish Hardware)
   a) Lockset: Hager or approved equal by Owner .
   b) Deadbolt: Hager or approved equal by Owner.
   c) Closer : Hager or approved equal by Owner.
   d) Finishes: Brushed Nickel or brushed Chrome.

DIVISION 8B: IMPACT RATED MAHOGANY FRONT DOOR AND TRANSOM - ALTERNATE NO. 4.

1. GENERAL REQUIREMENTS

   a. Include GENERAL CONDITIONS, SUPPLEMENTARY GENERAL CONDITIONS as part of this section.

   b. RELATED SECTIONS: Division 1 GENERAL REQUIREMENTS; Division 3, Concrete; Division 4A, MASONRY; Division 6B ROUGH CARPENTRY; Division 6C FINISH CARPENTRY; Division 7D INSULATION; Division 8e FINISH HARDWARE; Division 9A PAINT; Division 9B GYPSUM WALLBOARD; Division 9C STUCCO.

   c. Examine all other Sections of the Specifications for requirements that affect the work of this Section whether or not such work is specifically mentioned in this section.

   d. Coordinate work with that of all other trades affecting or affected by the work of this section. Cooperate with such trades to assure the steady progress of all work under the contract.

   e. SCOPE: Provide solid mahogany paneled front door, threshold, and weather stripping. See drawings for details.

   f. SUBMITTALS: Submit door manufacturing data sheets, Dade County NOAs, shop drawings, and finish samples for doors and hardware for Architect's approval.

   g. SHIPPING AND HANDLING AND STORAGE: All materials shall be delivered to site in original packages or containers bearing manufacturer's brand name, type of material, and applicable standard designation. Delivery and storage of doors shall be done under dry conditions. Handle unfinished doors with clean hands or gloves. Doors stored at the job site must be sealed.

   h. DOOR FINISH: Door, transom, frame, and casings will be either stained and varnished or painted per color selection by Owner. Door and transom will be stained and varnished on both sides per color selection by Owner; frame and casings will be painted high gloss WHITE on both sides. See Division 9A PAINT for painting details; Division 9G d VARNISH FINISHING.

2. MATERIALS

   a. MATERIALS: All wood material shall be paint grade mahogany.

   b. DESIGN: Raised Panel. See drawings for design.

   c. QUALITY STANDARDS: Components must meet AWI Quality Standards for Custom construction.

   d. CONSTRUCTION

1. Door
   a) Door shall be of raised panel construction to proportions shown on the drawings, conforming to AWI Custom standards or better. See drawings for profile of panel, sticking, and sizes of rails and stiles.
   b) Rails and stiles shall be blind doweled. Bottom rail shall be rabbeted. Glue shall be Resorcinal 150 g including hardener (Pencolite Adhesive G-1131) or approved equal by Owner.
   c) Panels shall float between sticking.
   d) Sticking shall be back sanded to prevent “white lining”.
   e) Door shall be 2-14" thick, beveled 3/32” at strike side.
   f) Door shall be constructed without predrilled lock bores.
   g) Doors shall be pre-hung. Frames shall be constructed of 6/4 paint grade (FAS) mahogany. Frames and threshold shall have fully rebated strikes and be fully kerfed for weather stripping.
   h) Swing shall be left hand out swing.

2. Transom
   a) Sash: Full 180 degree round top; 1-3/8" thick mahogany with 1/4" wood stops with brass screws.
   b) Muntin Bars: 9/16" Ogee T-mullions with wood stops and brass screws. Grill or applied.
   c) Glass: Clear, fixed impact.

3. Frame
   a) Material: Mahogany 1-5/8" x 8 1/2".
   b) Transom Bar: Mahogany per profile on drawings.

4. Weather Stripping
   a) Material and Manufacturer: Schlegel Q-Lon model QEBD-650. Weather stripping or approved equal by Owner. Color shall be White.

5. Threshold
   a) Material: White Oak 1-3/4" x 9-5/8"

6. Moldings: (See Drawings for profiles and details)
   a) Brick molding, exterior, interior trim, panel stops, stops, and covers: Mahogany, see drawings for profiles.

7. Finish Hardware (See also DIVISION 8E Finish Hardware)
   a) Hinges: Four Hager Mortise 4-1/2"x 4-1/2"
   b) Lockset: Multi-point as approved by Owner
   c) Deadbolt: Hager or equal approved by Owner Closer : Hager or equal approved by Owner.

DIVISION 8C: INTERIOR WOOD DOORS AND FRAMES

1. GENERAL REQUIREMENTS

   a. Include GENERAL CONDITIONS, SUPPLEMENTARY GENERAL

CONDITIONS as part of this section.

b. RELATED SECTIONS: Division 1 GENERAL REQUIREMENTS; Division 6B ROUGH CARPENTRY; Division 6C FINISH CARPENTRY; Division 8E FINISH HARDWARE; Division 9A PAINT; Division 9B GYPSUM WALLBOARD.

c. Examine all other Sections of the Specifications for requirements that affect the work of this Section whether or not such work is specifically mentioned in this section.

d. Coordinate work with that of all other trades affecting or affected by the work of this section. Cooperate with such trades to assure the steady progress of all work under the contract.

e. SCOPE: Furnish and install interior pre-hung wood doors. See drawings for locations and details.

2. MATERIALS

a. Manufacturer: Interior wood doors shall be manufactured by Rogue Valley Doors or approved equal by Owner.

b. Models and sizes: See door schedule for sizes, thicknesses, and design.

c. Doors shall be paint grade pine. Frames shall be 5/4 solid pine without finger joints.

d. Doors shall be procured pre-hung. Hinges shall be square cornered satin bronze 4”X 4” fully mortised, three per door.

e. Doors shall be constructed without predrilled lock bores.

3. INSTALLATION: See Division 6B, FINISH CARPENTRY.

4. FINISHING: Doors shall be painted according to the paint specification herein and the architect’s color schedule. Doors shall be removed by carpenters for preparation and painting by the painting contractor (See Division 9, PAINTING), and shall be re-hung by carpenters only after paint has cured properly. Doors may not be painted while hung.

DIVISION 8D: HOLLOW METAL DOORS AND FRAMES

1. GENERAL REQUIREMENTS

a. Include GENERAL CONDITIONS, SUPPLEMENTARY GENERAL CONDITIONS as part of this section.

b. RELATED SECTIONS: Division 1 GENERAL REQUIREMENTS; Division 3, Concrete; Division 4, Masonry; Division 6, CARPENTRY AND MILLWORK; Division 7, INSULATION; Division 9, GYPSUM WALLBOARD, STEEL STUDS, PAINTING.

c. Examine all other Sections of the Specifications for requirements that affect the work of this Section whether or not such work is specifically mentioned in this section.

d. Coordinate work with that of all other trades affecting or affected by the work of this section. Cooperate with such trades to assure the steady progress of all work under the contract.

e. SCOPE: Provide hollow metal doors and frames. See drawings for locations and details.

f. SUBMITTALS: Submit door data sheets, shop drawings for doors and hardware for Owner's Representative's approval.

g. SHIPPING AND HANDLING AND STORAGE: All materials shall be delivered to site in original packages or containers bearing manufacturer's brand name, type of material, and applicable standard designation. Delivery and storage of doors shall be done under dry conditions. Store all materials on planks or dunnage in a dry location in a vertical position, allowing air circulation between units. Cover to protect. Doors stored at the job site must be sealed.

h. STANDARDS OF PERFORMANCE AND REFERENCES: HMMA 820, 830, 831, 840, 850, and 861; ANSI A250 or if superseded, as current.

i. SUBMITTALS: Furnish manufacturers data for all doors.

j. WARRANTY: Doors and frames shall be warranted from defects in workmanship and quality for a period of one year.

2. MATERIALS

a. DESIGN: Work in this section is based on systems provided by Curries Doors and Frames (Regional Distributor is American Door and hardware, Crystal River, FL or approved equal by Owner, See drawings for specific door types.

b. FABRICATION:

1) General: Assemble work using all welded construction.

2) Materials: All Materials shall be constructed from formed sheet shapes or structural shapes and bars, commercial quality, cold-rolled steel conforming to ASTM A366. Steel shapes shall comply with ASTM A36, and bars with ASTM A108. Frames shall be sized to partitions. Doors shall be solid core full flush pre-hung metal doors with cold-rolled 18 gauge outer sheets, with edges welded and finished flush, with internal steel reinforcing and mineral wool filler. Frames shall be cold-rolled, stretcher-leveled sheet metal, standard size and profile, 18 gauge. All corner joints shall be mitered. Joints shall be closed tight, continuously welded, and ground smooth and flush.

3) Design: Doors shall be constructed with panel faces with no visible seams.

See drawings for details. Frames shall be welded units with integral stops and trim conforming to configurations indicated on the drawings. Knock down frames are not accepted without Owner's Representative's written approval. All field welds must be made by certified welders meeting AWS D1.1. See drawings for details.

4) Hardware Reinforcement: Factory mortise, reinforce, drill, and tap doors and frames for all mortise hardware. Provide hinges to ASTM standards for fire and sound retardant doors. Provide reinforcing plates for surface-type hardware. All drilling and tapping shall be done in the field. Provide dust cove boxes on frame mortises.

5) Painting and Cleaning: After fabrication all tool marks and surface imperfections shall be removed and exposed faces of all welded joints dressed smooth. Chemically treat all surfaces to insure maximum paint adhesion and coat with a rust-inhibitive primer compatible with finish paint specified under Division 9, Painting.

3. INSTALLATION

a. GENERAL:

1) Install doors and frames in accordance with approved shop drawings and recommended installation instructions of the manufacturer.

2) Floor and Jamb Anchors: Provide suitable anchors for particular application, per HMMA 861.

3) Obtain from Finish Hardware supplier all required schedules, templates, and hardware samples to permit correct installation of hardware.

b. SETTING FRAMES

1) Set all frames in accordance with SDI 105-92.

2) Set welded frames in position prior to beginning partition work. Brace frames until permanent anchors are set.

3) Set anchors for frames as work progresses. Install anchors at hinge and strike levels. Anchors shall be as follows:

a) Wall anchors for frame attachment to masonry construction: Masonry anchors, adjustable, flat, corrugated or perforated 'T' shaped anchors with leg not less than 2 inches(50) wide by 10 inches (254)long or masonry "wire" type not less than 3/16 inch (5) diameter.

b) Wall anchors for attachment to drywall partitions: Jamb anchors to be provided; one each jamb per 30 inches of frame height or fraction thereof, two min. per jamb.

c) Floor anchors: Angle clip type, 16 ga. (1.4) minimum welded to

the bottom of each jamb.

4) Install frames in prepared openings in wood or masonry walls using countersunk bolts and expansion shields: 3/8 inch (9.5) countersunk flat head stove bolt and expansion shields. Weld pipe spacers or other type of spacers per manufacturer's standard design in back of frame soffit to protect frame profile during tightening of bolts and anchors.

5) Jambs must be plumb and square.

6) Frames shall be sized to partitions or as otherwise indicated on the plans.

7) Use temporary setting spreaders at all locations. Use intermediate spreaders to assure proper door clearances and header braces for grouted frames.

8) Set sill members and exterior trim members in and/or against a bed of exterior sealant.

c. DOOR INSTALLATION

1) The General Contractor shall comply with the Door Manufacturer's recommended installation instructions.

2) Install hollow metal doors in frames. Set units plumb, level and true to line, without warp or rack of jamb/frame, sash or glazing. Clearances at edge of doors shall be 1/8 inch. Set at sills without thresholds: 5/8 inch (15.9) maximum above finish floor.

3) Obtain from Finish Hardware supplier all required schedules, templates, and hardware samples to permit correct installation of hardware.

4) Fasteners, sealants and other materials required to successfully complete the door installation that are not specified and supplied by the Door Manufacturer, shall be the responsibility of the General Contractor.

5) Hardware shall be installed by skilled mechanics and shall be accurately fitted and adjusted using hardware specified in Division 8D FINISH HARDWARE.

6) Adjustment and Cleaning:

a) Remove dirt and excess sealants, mortar or glazing compounds from exposed surfaces.

b) Adjust moving parts for smooth operation. Use shims if necessary to allow for proper closing.

c) Fill all dents, holes, etc. with metal filler, sand smooth and flush with adjacent surfaces - Re-prime/paint to match finish.

d. FINISHING: Doors shall be painted according to the paint specification herein and the architect’s color schedule. Doors shall be removed by carpenters for

preparation and painting by the painting contractor (See Division 9, PAINTING), and shall be re-hung by carpenters only after paint has cured properly. Doors may not be painted while hung.

DIVISION 8E: FINISH HARDWARE

1. GENERAL REQUIREMENTS

   a. Include GENERAL CONDITIONS, SUPPLEMENTARY GENERAL CONDITIONS as part of this section.

   b. RELATED SECTIONS: Division 1 GENERAL REQUIREMENTS; Division 6C FINISH CARPENTY; Division 8A MAHOGANY FRONT DOOR; Division 8B HOLLOW METAL DOORS; Division 8C WOOD DOORS; Division 9A PAINT.

   c. Examine all other Sections of the Specifications for requirements that affect the work of this Section whether or not such work is specifically mentioned in this section.

   d. Coordinate work with that of all other trades affecting or affected by the work of this section. Cooperate with such trades to assure the steady progress of all work under the contract.

   e. SCOPE: General Contractor is solely responsible for coordinating purchasing and installing finish hardware. See door schedule and drawings for locations.

   f. HARDWARE CONSULTANT: Contractor shall procure all hardware through a DHI certified consultant.

   g. SUBMITTALS: The general Contractor shall provide the Owner's Representative with finish hardware submittals for approval prior to ordering materials. Submittals shall consist of the following:

      1) <u>Door Hardware Schedule</u>: Organized into door hardware sets indicating type, style, function, size, label, hand, keying, manufacturer, fasteners, location, and finish of each door hardware item, complete for ordering purposes.

      2) <u>Catalog photographs or actual samples</u> and model numbers of all items.

      3) <u>Samples</u>: For each exposed finish.

      4) <u>Master Keying Schedule</u>: Detail Owner's final keying instructions using the manufacturer's Master keying Instruction sheet.

   h. COMPONENTS

      1) <u>Hinges</u>
         a) Manufacturer shall be Hager or approved equal by Owner.
         b) Provide only template-produced units.

c) All hinges shall be architectural grade, fully mortised, with square corners and shall be specified to match size and weight of door and frequency of its use.
d) Front door hinge shall be ball-bearing.
e) Base metals shall be stainless steel for exterior doors and brass for interior hinges.
f) Provide non-removable pins: Provide set screw in hinge barrel that prevents removal of pin while door is closed; for out-swinging exterior doors.
g) Provide security studs where called out on the Outline Hardware Schedule.
h) Screws shall be Phillips stainless steel flat-head screws; screw heads finished to match surface of hinges. For metal doors and frames: Machine screws (drilled and tapped holes).
i) Tips shall be standard.
j) Finish: Satin Chrome.

2) Pocket Slide Track and Glides
a) Manufacturer: L.E. Johnson Products or approved equal by Owner.
b) Model: 2700 Preassembled Door Frames with pre-installed 100 series box track.

3) Locksets
a) Manufacture shall be Hager or approved equal by Owner.
b) Cylinders: Tumbler type, constructed from brass or bronze, stainless steel, or nickel silver from same manufacturer as for locks and latches.
c) Number of Pins: Six.
d) Security Grade: BHMA Grade 2, Light commercial.
e) Cores: Interchangeable, finish face to match lockset.
f) Design: 3700 series interconnected/ sectional.
g) Lever and Trim Style: August
h) Backset: 2-3/4 inches.
i) Strikes: T-Strike.
j) Finish: Satin Chrome

4) Pocket Slider Lockset
a) Manufacturer: Accurate Lock and Hardware, Stamford, CN or approved equal by Owner.
b) Flush pulls and Lock: Model CN PD R161 w/2-3/8" backset.
c) Finish: Satin Chrome.

5) Passages
a) Manufacture shall be Hager or approved equal by Owner.
b) Design: 3600 series.
c) Knob and Trim Style: August
d) Backset: 2-3/4 inches.
e) Strikes: T-Strike.
f) Finish: Satin Chrome

6) Dead Bolts

a) Manufacture shall be Hager or approved equal by Owner.
b) Design: 3100 series, single cylinder with thumb latch.
c) Knob and Trim Style: August
h) Backset: 2-3/4".
i) Strikes: Standard)
c) Finish: Satin Chrome

7) Door Closers
1) Manufacturers: LCN Closers or approved equal by Owner.
2) Model: LCN 4031 Medium Duty Door Closer.
3) Finish: Satin Chrome.

8) Kick Plate (Door No. 3)
1) Manufacturer: Hager or approved equal by Owner.
2) Beveled three sides.
3) Thickness: .038 gauge.
4) Size: 6" by width of door.
5) Material: Stainless Steel, brushed.

9) Floor and Wall Stops and Holders
1) Manufacturer: Hager or approved equal by Owner.
2) Provide floor stops for doors, unless wall or other type stops are scheduled or indicated. Do not mount floor stops where they will impede traffic. Use appropriate fasteners for application. If mounted on stud partition provide wall grounds (blocking) for purchase. Where floor or wall stops are not appropriate, provide overhead holders. See outline schedule for locations.
3) Screws: Stainless steel.
4) Finish: Satin Chrome.

j. Thresholds: See drawings.
1) Finish: Mill finish, brushed.

i. GUARANTEE AND WARRANTIES

1) Attention is directed to provisions in the GENERAL CONDITIONS regarding guarantees and warranties for work under this Division.

2) Manufacturers shall provide their standard guarantees for work under this Section. However such guarantees shall be in addition to, not in lieu of all other liabilities which manufacturers and the Contractor may have by law or by other provisions of the Contract Documents

3) Warranty Period: Three (3) years from date of Substantial Completion, unless otherwise indicated including but not limited to:
a) Structural failures including excessive deflection, cracking or breakage.
b) Faulty operation of operators and door hardware.
c) Deterioration of metals, metal finishes, and other materials beyond normal weathering.

j. DELIVERY, STORAGE, AND PROTECTION OF MATERIALS

1) All materials shall be brought to the site in manufacturer's original unbroken factory-sealed containers bearing the manufacturer's standard label indicating product, brand name, manufacturer, weight, product type, and color.

2) Handle and protect material from rain and moisture and contamination in transit and after arrival on the job.

3) The General Contractor shall receive, check against owner's list all items, and store them at a secure location until ready to install. The General Contractor shall be solely responsible for all items of hardware after receipt from manufacturer.

k. QUALITY ASSURANCE

1) Supplier Qualifications: Supplier must be or employs a qualified Door and Hardware Institute Architectural Hardware Consultant (DHI) or as approved by the Owner's Representative.

l. MASTER KEY SYSTEM

1) Keys: Provide nickel-silver keys, with one extra blank key for each lock, and three change keys and three master keys.

2) Key Control System: Include key-holding hooks, labels, key tags, self-locking key holders, envelopes, and markers.

3) Manufacturers: Key Control Systems, Inc. (KCS) or approved equal by Owner.

m. ADA REQUIREMENTS

1) All hardware shall meet ADA requirements and the FBC.

2. OUTLINE HARDWARE SCHEDULE: The following is intended to provide the Hardware Consultant with the architect's intent. Consultant shall use it to designers intent and finish concept:

a. <u>Door No. 1 (Base Bid)</u>

Hinges (3): <u>By door manufacturer</u>. Lifetime Satin Nickel finish. Provide security studs.

Deadbolt: By door manufacturer (1) Split: Lifetime Satin Nickel Finish outside/Satin Nickel inside.
Closer with Holder (1): Satin Chrome.

b. <u>Door No. 1(Alternate No.4)</u>

Hinges (3): By door manufacturer. Lifetime Satin Nickel finish. Provide security studs.
Lockset with lever: By door manufacturer: Multipoint by door manufacturer. Lifetime Satin Nickel Finish outside and inside.
Deadbolt: By door Manufacturer: (1) Split: Lifetime Satin Nickel Finish outside/Satin Nickel inside.
Closer with Holder (1).

b. Door No. 2

Hinges (3).
Interconnected/sectional Privacy with Deadbolt (1) with lever.
Closer with Holder (1).

c. Door No. 3

Hinges (3).
Interconnected/sectional Privacy with Deadbolt (1) with lever.
Closer with Holder (1).
Threshold (Type A/ADA): See drawings.

d. Door No. 4

Hinges (3).
Interconnected/sectional Privacy with Deadbolt (1) with lever.
Closer with Holder (1).

e. Door No. 5

Hinges (3).
Passage with lever (1).
Deadbolt (1).
Wall Stop (1).

f. Door No. 6

Hinges: (3).
Privacy with lever (1).
Wall Stop (1).
Closer with holder (1).

g. Door No. 7

Hinges: (3).
Privacy with lever (1).
Deadbolt (1).
Closer with Holder (1).

h. Door No. 8 (Pair)

Hinges (6).

Passage with lever.
Deadbolt (1).
Surface Bolts (2).
Door Holder (2).
Threshold: See drawings.
Astragal.

j. Door No.9 (Pair)

Door Frame (2) Preassembled Door Frames with pre-installed box track.
Tracks (2) Commercial door track with integral guide.
Flush Pulls and Flush pull Sliding Door Lock (2).

g. Door No. 10

Hinges: (3).
Passage with lever (1).

h. Door No. 11

Hinges: (3).
Lockset: Storage Room Lock with lever.

3. INSTALLATION

a. Examine doors and frames for compliance with requirements for installation tolerances, wall and floor construction, and other conditions affecting performance.

b. Steel Door and Frame Preparation: Comply with DHI A115 series. Drill and tap doors and frames for surface-applied hardware according to SDI 107.

c. Mounting Heights: Comply with DHI "Recommended Locations for Architectural Hardware for Standard Steel Doors and Frames."

d. Adjust and reinforce attachment substrates as necessary for proper installation and operation. Drill and countersink units that are not factory prepared for anchorage fasteners. Space fasteners and anchors according to industry standards.

f. Adjust door control devices to compensate for final operation of heating and ventilating equipment and to comply with accessibility requirements.

g. Door Closers: Adjust sweep period so that from an open position of 70 degrees, the door will take at least three seconds to move to a point 3 inches (75 mm) from the latch, measured to the leading edge of the door.

h. Thresholds: Contractor shall construct slab block-outs to accept the specified thresholds. See drawings for details.

DIVISION 8F: WINDOWS

1. GENERAL REQUIREMENTS

   a. Include GENERAL CONDITIONS, SUPPLEMENTARY GENERAL CONDITIONS as part of this section.

   b. RELATED SECTIONS: Division 1 GENERAL REQUIREMENTS; Division 4A Concrete Masonry Units; Division 4B PRECAST CONCRETE WINDOW SILLS; Division 4C MARBLE INTERIOR WINDOW SILLS; Division 6B ROUGH CARPENTRY; Division 6C FINISH CARPENTRY; Division 7C CAULKING AND SEALANTS; Division 9A PAINTING; Division 9B GYPSUM WALLBOARD.

   c. Examine all other Sections of the Specifications for requirements that affect the work of this Section whether or not such work is specifically mentioned in this section.

   d. Coordinate work with that of all other trades affecting or affected by the work of this section. Cooperate with such trades to assure the steady progress of all work under the contract.

   e. SCOPE: Furnish and install windows and window flashing. See drawings for locations and sizes.

   f. SUBMITTALS: Submit window data sheets, shop drawings, and color sample for Owner's Representative's approval. Shop drawings must include muntin and mullion layouts as indicated on the elevation drawings.

   g. SHIPPING AND HANDLING AND STORAGE: All materials shall be delivered to site in original packages or containers bearing manufacturer's brand name, type of material, and applicable standard designation. Delivery and storage of windows shall be done under dry conditions. Handle unfinished windows with clean hands or gloves. Windows stored at the job site must be sealed.

   h. WARRANTY: Doors shall carry the manufacturer's warranty, which includes but is not limited to all parts and labor for a period of one year and three years parts and components against manufacturer's defects excepting finish for three years; three years parts and components for weather-stripping; five years parts and components against delaminating or color change of laminated glass; and five years parts and components against sealant adhesive failure.

2. MATERIALS

   a. MANUFACTURER: All exterior windows shall be manufactured by PGT Industries, North Venice, Florida or approved equal by Owner.

   b. STANDARDS: Windows shall meet all requirements of current State of Florida Building code for Large Missile Impact Resistant windows.

   c. MODELS: All windows shall be PGT WinGuard or approved equal by Owner. See window schedule for types and sizes.

d. COLOR: Color shall be factory white.

e. GLAZING: Glass shall be clear impact glass

f. MULLIONS AND MUNTINS: Provide double extruded mullions and muntins to match sightlines on drawings.

g. INSTALLATION: Install windows strictly to approved manufacturer's requirements for hurricane loading required by code and to conform to the details on the architectural drawings. Fasteners shall be stainless steel.

DIVISION 8G: IMPACT STORM PANELS

1. GENERAL REQUIREMENTS

a. Include GENERAL CONDITIONS, SUPPLEMENTARY GENERAL CONDITIONS as part of this section.

b. RELATED SECTIONS: Division 1 GENERAL REQUIREMENTS; Division 4A CONCRETE MASONRY UNITS; Division 4B PRECAST WINDOW SILLS.

c. Examine all other Sections of the Specifications for requirements that affect the work of this Section whether or not such work is specifically mentioned in this section.

d. Coordinate work with that of all other trades affecting or affected by the work of this section. Cooperate with such trades to assure the steady progress of all work under the contract.

e. SCOPE: Furnish and install removable storm panels for all exterior doors, except Door No. 1 (Front Door) if Alternate No. 4 is accepted. See drawings for locations and sizes.

f. SUBMITTALS: Submit manufacturer's panel data sheets and Dade County Notice of Acceptance and material sample for Owner’s Representative’s approval.

g. SHIPPING AND HANDLING AND STORAGE: All materials shall be delivered to site in original packages or containers bearing manufacturer's brand name, type of material, and applicable standard designation. Delivery and storage of panels shall be done under dry conditions.

h. WARRANTY: Doors shall carry the manufacturer’s warranty, which includes but is not limited to all parts and labor for a period of one year and three years parts and components against manufacturer’s defects.

2. MATERIALS

a. PRODUCT: Panels shall be made of clear polycarbonate resin and shall be furnished with removable top and bottom mounting tracks and all necessary screws, anchors, plastic caps, wing nuts and threaded inserts.

b. STANDARDS: Panels shall meet all requirements of current State of Florida Building code for Large Missile Impact Resistant openings.

d. COLOR: Tracks shall be factory WHITE.

e. SUBMITTALS: Provide manufacturer's data sheets and Dade County Notice of Acceptance or affidavits of conformance acceptable to the Building Official.

g. INSTALLATION

1. Size panels to mount within masonry openings to fully cover window and door frames.

2. Install all panels as a condition substantial completing of the project. Upon Owner's Representatives approval of the installation remove the panels and tracks and them according to the manufacturer's recommendations at a location selected by the Owner's Representative.

3. Neatly mark all panels and tracks with numbers or letters denoting the opening they are to protect. Marking shall be made in 1" letters at the lower right hand corner of each item with indelible black ink.

DIVISION 9A: PAINT

1. GENERAL REQUIREMENTS

a. Include GENERAL CONDITIONS, SUPPLEMENTARY GENERAL CONDITIONS as part of this section.

b. Examine all other Sections of the Specifications for requirements that affect the work of this Section whether or not such work is specifically mentioned in this section.

c. Coordinate work with that of all other trades affecting or affected by the work of this section. Cooperate with such trades to assure the steady progress of all work under the contract.

d. SCOPE: All new construction shall be painted, inside and out.

e. RELATED SECTIONS: Division 1 GENERAL REQUIREMENTS; Division 4A CONCRETE MASONRY UNITS Division 6B FINISH CARPENTRY; Division 7C CAULKING AND SEALANTS; Division 8A FRONT DOOR AND TRANSOM; Division 8C INTERIOR WOOD DOORS AND FRAMES; Division 8D HOLLOW METAL DOORS; Division 8F WINDOWS; Division 9B GYPSUM WALLBOARD; Division 9C STUCCO.

f. SUBMITTALS: Provide for the Owner’s Representative’s approval the following:

1) Manufacturer’s Data Sheets: For all paints. Indicate surfaces that apply.

2) Control Samples: 6"'X 12" Masonite color samples of all paint applications, one prime coats and two finish coats.

g. SHIPPING AND HANDLING AND STORAGE: All materials shall be delivered and stored under dry conditions. Follow specifications for Doors and Windows for delivery, site storage, protection and installation.

h. STANDARD: Unless otherwise indicated in schedule or drawings, all surfaces shall be painted with not less than one (1) shop or prime coat and two (2) finish coats of an appropriate paint.

i. MANUFACTURER: All paints and finishes used for the project shall be manufactured by Sherwin Williams Paint Company or approved equal by Owner. See Paint Schedule for specific types, locations and colors.

j. GENERAL: Mechanical Subcontractors or the General Contractor will remove and replace where necessary, accessories, plates, hardware, lighting fixtures, heating units, and all other finished items to allow painting of obstructed materials. In no case shall this Subcontractor attempt to paint around finish hardware of other removable items that are already fitted into place.

j. CLEAN-UP: At completion of work in each area, remove all paint spots, oil, and stain from all surfaces, including finish hardware.

k. SPRAY PAINTING: <u>Spray painting of paint will not be accepted under any circumstances unless approved by the Owner's representative. Any spraying of finish coats, if approved, must be back-brushed.</u>

l. KNOT SEALING: All visible knots lumber or woodwork to be painted shall be spot primed with at least two coats pigmented shellac. Bleed through will require refinishing of affected areas.

m. WEATHER: Exterior painting is not to be done immediately following wet weather or during windy or threatening weather.

n. PAINT SCHEDULE: The following paint material list is based on products of Sherwin Williams Paint Company. Submit Manufacturer's data sheet for Owner's Representative's approval prior to purchasing paint.

1) <u>Exterior Stucco</u>

One primer coat: Loxon Primer A24w8300 series.

Two finish coats: A100 Exterior FLAT A6w151 series.

Color: SW BLONDE, SW6128.

2) <u>Ferrous Metals and Metal Doors (Factory Primed)</u>

Two finish coats: SuperPaint Ext HIGH GLOSS A85w51 series.

Color: SW WESTHIGHLAND WHITE SW 7566.

3) Exterior Wood Trim, Fascias, Soffits, and Bay Window Paneling

One prime coat: Multi Purpose Primer B51w450 series.

Two finish coats: SuperPaint Ext HIGH GLOSS A85w51 series.

Color: SW WESTHIGHLAND WHITE SW 7566.

4) Fiberglass-Cement Prefabricated Porch Columns

One prime coat: Multi Purpose Primer B51w450 series.

Two finish coats: SuperPaint Ext HIGH GLOSS A85w51 series.

Color: SW WESTHIGHLAND WHITE SW 7566.

5) Exterior PVC Moldings

One prime coat: Multi Purpose Primer B51w450 series.

Two finish coats: SuperPaint Ext HIGH GLOSS A85w51 series.

Color: SW WESTHIGHLAND WHITE SW 7566.

6) Exterior and Interior of Front Door

One prime coat: Multi Purpose Primer B51w450 series

Two finish coats: All Surface Enamel A41b200 Factory Black.

7) Interior Side of Wood Bay Window Casings and all other Interior Wood Trim and Wood Moldings

One prime coat: Multi Purpose Primer B51w450.

Two finish coats: ProMar 200 INTERIOR GLOSS B21w151 series.

Color: SW PURE WHITE SW 7005

8) Interior Gypsum Board Walls and Ceilings

a) Vestibule (Room 2)

One prime coat: Multi Purpose Primer B51w450 series.

Two Washable finish coats: Promar 200 Interior Zero VOC B30w20651 series, MATTE.

Color: KILIM BEIGE SW 6106.

b) Family Room (Room 3)

One prime coat: Multi Purpose Primer B51w450 series.

Two Washable finish coats: Promar 200 Interior Zero VOC B30w20651 series, MATTE.

Color: KILIM BEIGE SW 6106.

c) Office (Room 4)

One prime coat: Multi Purpose Primer B51w450 series.

Two Washable finish coats: Promar 200 Interior Zero VOC B30w20651 series, MATTE.

Color: DEVINE WHITE SW 6105.

d) Archives (Room 4)

One prime coat: Multi Purpose Primer B51w450 series.

Two Washable finish coats: Promar 200 Interior Zero VOC B30w20651 series, MATTE.

Color: KILIM BEIGE SW 6106.

j) Store Room and Bathroom (Rooms 6 and 7) (Washable)

One prime coat: Multi Purpose Primer B51 series.

Two finish coats: Super Paint Interior SATIN A87 series.

Color: SW KILIM BEIGE SW 6106.

9) Interior Concrete Block Walls (Washable)

One primer coat: Loxon Primer A24w8300 series.

Two finish coats: A100 Exterior Gloss

Color: SW BLONDE, SW6128.

10) Handicapped Parking Lot Stripes

One Coat Heavy Duty: DTM GLOSS B66 series

C. EXECUTION

1. PAINTER RESPONSIBILITY FOR INSPECTION: Starting of work under this Section will be construed an acceptance of such surfaces as being satisfactory. Defects in work resulting from such accepted surfaces shall be corrected by the painter at his own expense if defects fall under the painting specification or by the General contractor otherwise.

2. PREPARATION:

   a. All spaces shall be broom-clean and all surfaces dry before painting is started. All dust, dirt, plaster, grease, and other extraneous matter, affecting finish work shall be removed. The respective trades shall remove foreign matter on surfaces left by other trades.

   b. All nail holes and cracks on both exterior and interior work shall be carefully putty stopped or plugged. Natural or stained wood finishes shall be done after prime coat or sealer has been applied.

   c. Metal surfaces shall be properly cleaned of all scale, rust, grease, oil, dirt, and other foreign matter, the properly washed with an appropriate solvent or cleaning agent. Puttying shall be done after application of prime coat.

   d. Remove blisters and other imperfections in previous coats caused by foreign substances or paint skins from all painted surfaces before the subsequent coat is applied. All wood and metal surfaces shall be rubbed down before finishing and between coats with fine sandpaper or steel wool, leaving a perfectly clean surface. Smooth finished surfaces shall be sanded before finishing and between coats as required to smooth out rough area and to assure a smooth, even surface.

   e. All surfaces to receive paint shall be smooth and free of sandpaper scratches, mill marks, and other imperfections.

   f. Stained and natural finished woodwork shall be back sealed with one coat of clears sealer or one coat of approved house paint primer.

   g. All visible knots shall be spot primed with at least two coats pigmented shellac before applying first coat of paint. Bleed through will require refinishing of affected areas.

   h. All trim shall be caulked with the specified interior or exterior caulk.

3. PAINTING

   a. PROTECTION: Furnish and lay suitable drop cloths in all areas where painting is being done to protect floors and all other surfaces from damage during the work.

   b. WEATHER: Exterior painting is not to be done immediately following wet weather or during windy or threatening weather.

   c. SCAFFOLDING: Furnish, erect, maintain, and remove all scaffolds,

staging, and rigging required for the work.

d. SPRAY PAINTING: Spray painting of paint will not be accepted under any circumstances unless approved by the Owner's representative. Any spraying of finish coats, if approved, must be back-brushed.

e. SEQUENCE: No painters finish shall be applied until the preceding coat is thoroughly dry and in no case less than seven (7) days for exterior work and forty-eight (48) hours for interior work.

f. COORDINATION: Mechanical Subcontractors or the General Contractor will remove and replace where necessary, accessories, plates, hardware, lighting fixtures, heating units, and all other finished items to allow painting of obstructed materials. In no case shall this Subcontractor attempt to paint around finish hardware of other removable items that are already fitted into place.

g. TOUCH UP: Touch-up finish coats of factory finished items that become damaged before the completion of the building. Sand damaged areas smooth and apply the specified primer before applying finished coat. Where spot touch-up cannot be done neatly and blended smoothly with other finish material, repaint the entire surface as approved by the Owner's Representative.

h. CLEAN-UP: At completion of work in each area, remove all paint spots, oil, and stain from all surfaces, including finish hardware.

DIVISION 9B: GYPSUM WALLBOARD

1. GENERAL REQUIREMENTS

a. Include GENERAL CONDITIONS, SUPPLEMENTARY GENERAL CONDITIONS as part of this section.

b. Examine all other Sections of the Specifications for requirements that affect the work of this Section whether or not such work is specifically mentioned in this section.

c. Coordinate work with that of all other trades affecting or affected by the work of this section. Cooperate with such trades to assure the steady progress of all work under the contract.

d. SCOPE: Furnish and install all gypsum wallboard. All walls and ceilings of the project shall be finished with gypsum wallboard except for those where other materials are indicated on the room finish schedule.

e. RELATED SECTIONS: Division 1 GENERAL REQUIREMENTS; Division 6A PRE-ENGINEERED TRUSSES; Division 6B ROUGH CARPENTRY; Division 6B FINISH CARPENTRY; Division 7C CAULKING AND SEALANTS; Division 9A PAINTING; Division 9C TILE; Division 9D STUCCO.

f. SHIPPING AND HANDLING AND STORAGE: All materials shall be delivered and stored under dry conditions.

g. SHIPPING AND HANDLING AND STORAGE: All materials shall be delivered and stored under dry conditions. Store gypsum board inside horizontally and above ground slab. Protect board and all materials from damage by moisture, weather, and all other causes. Provide adequate ventilation to prevent condensation. Stack boards flat; do not allow sagging or damage to the edges, ends, and surfaces. Storage supports should be at least 4" width.

h. MATERIALS: Unless approved otherwise by the Owner's representative, all site-installed wallboard shall be as follows:

1) Regular Board: Shall be Georgia Pacific Glass-Mat, Mold and Mildew Resistant Interior Wall Panels: ASTM 1177, coated inorganic glass mat-faced back and paper-faced front, enhanced mold and mildew-resistant gypsum core wallboard. Long edges shall be tapered. Size shall be 5/8" thick and 48" wide. In lengths to eliminate end-joint conditions.

2) Moisture Resistant Board: Where indicated on the room finish schedule install Georgia Pacific Glass-Mat, Water Resistant, Mold and Mildew Resistant interior wall panels per ASTM 1177, coated inorganic glass mat-faced, water-resistant treated gypsum core wallboard. Long edges shall be tapered.

3) Porch Soffit: Front porch soffit shall be Georgia Pacific "Dens glass" 5/8" thick.

4) Corner Bead: 1-1/8"x1-1/8" vinyl with perforated flanges for all outside corners.

5) Casing Beads: Provide casing beads at top of stucco under the entablature and as needed as all other terminations. Casing beads shall be vinyl and manufactured by ClarkDietrich/Vinyl Corp. or approved equal by Owner.

6) Fasteners for gypsum board to wood members: Type W bugle head screws; for wallboard to metal channel use Type S. Penetration should be at least 3/8" beyond the gypsum board surface.

7) Joint treatment: Regular perforated tape, joint compound and topping compound as recommended by wallboard manufacturer.

i. INSTALLATION

1) Do not commence installation until the building is closed-in.

2) Ceilings: Install ceilings first. Apply ceiling board of maximum practical length with the long dimension at right angles to the furring. Center end joints over furring; fir joints neatly and accurately; stagger end joints from those in adjacent panel rows and from base layer in 2-layer construction. At

acoustically isolated ceiling construction apply resilient channels not over 24" o.k. at right angles to the joists using type S Hi-Lo screws. Install gypsum board as specified above.

3). Walls: Except as otherwise specified herein, all gypsum wallboard shall be installed vertically and all edges and joints shall be centered over studs or blocking. Joints shall not occur within 12 inches of door or window frame on opposite sides of partition be allowed over same stud or post, unless specifically indicated. Stagger vertical joints with respect to base layer when applying finish layer of double board walls.

4) Screws: Fasten all wallboard by means of power-driven metal screws, located not over 12" on center at all edge and in the field. Stagger screws in adjacent sheets on opposite sides of joints. Depress screw heads slightly below surface of the wallboard. Do not drive screws closer than 3/8" from edges and ends of the board.

5) Taping, Compounding, and Sanding: At internal corners, fold tape lengthwise through the middle, and fit neatly into corner. Dimples at screw heads shall receive three (3) coats of compound. Allow 24 hours drying time between applications. Flanges of metal corner and casing bead shall be concealed by at least two (2) coats of compound which, when finished, shall extend approximately 8" from exposed nosing. Each coat shall be sanded as necessary after compound has dried. Use topping compound for finishing coats. Final coat after sanding shall leave the gypsum wallboard and treated areas smooth with joints concealed from view in the finished work. Care shall be taken not to scuff the paper surface of the board when sanding.

DIVISION 9C: STUCCO

1. GENERAL REQUIREMENTS

a. Include GENERAL CONDITIONS, SUPPLEMENTARY GENERAL CONDITIONS as part of this section.

b. Examine all other Sections of the Specifications for requirements that affect the work of this Section whether or not such work is specifically mentioned in this section.

c. Coordinate work with that of all other trades affecting or affected by the work of this section. Cooperate with such trades to assure the steady progress of all work under the contract.

d. SCOPE: Furnish and install a two-coat stucco system atop concrete masonry units and concrete beams and columns prepared with a bonding agent. See drawings for locations.

e. RELATED SECTIONS: Division 3 CONCRETE; Division 4A CONCRET MASONRY UNITS; Division 6B FINISH CARPENTRY.

f. SUBMITTALS: Provide manufacturer's data sheets for all materials.

g. SCAFFOLDING: Furnish scaffolding under PAINTING section.

h. DELIVERY, STORAGE, AND PROTECTION OF MATERIALS:

1) All materials shall be brought to the sight manufacturer's original unbroken factory-sealed containers bearing the manufacturer's standard label indicating product, brand name, manufacturer, weight, product type, and color.

2) Handle and protect material from rain and moisture and contamination in transit and after arrival on the job.

2. MATERIALS

a. Cement: Portland Type I or IA (if with air-entraining agent).

b. Lime: Containing not more than 8% by weight of unhydrated oxide.

c. Sand: Clean, sound, and graded uniformly.

d. Water: Potable, from public main.

e. Bonding Agent: Bond-It manufactured by Associated Paint, Inc.

f. EXECUTION

a. Surface Preparation: All surfaces to receive stucco shall be free of dirt, grease, oil, dust, paint, protrusions, build-out, or deficiencies so the wall varies more than 1/4" from flatness, and shall be cured for 30 days.

b. Commencement of installation of stucco means acceptance of substrate conditions by stucco applier.

c. Bonding Agent: All surfaces to receive stucco shall be prepared with the application of the specified bonding agent. Preparation shall conform to the bonding manufacturer's surface preparation requirement. All form release and curing agents must be removed.

d. Mixing: Proportion and mix all Portland cement plaster in accordance with prevailing conditions on the jobsite. Do not apply stucco if ambient air temperature exceeds 80 degrees without using a proper admixture. Admixtures shall be proportioned-mixed and applied in accordance with the printed directions of the manufacturer. Prepare all stucco coats in a mechanical mixer for at least ten (10) minutes using sufficient water to produce a workable consistency and uniform color. Moisten surface evenly to reduce excessive suction.

f. Base coat: Apply a 3/8" base coat to the entire wall without interruptions to avoid cold joints. Float surface uniformly to promote densification of the coat and provide a surface receptive to bonding the finish coat.

g. Curing time between Coats: Base coat shall be cured by fogging the surface with water at least once a day, depending upon ambient air humidity. Allow sufficient time between coats to permit each coat to cure or develop enough rigidity to resist cracking or other physical damage when finish coat is applied.

h. Finish Coat: Moisten entire base coat. Apply finish coat with sufficient material and pressure to ensure tight contact with, and complete coverage of the basecoat to a minimum thickness of 1/8". Finish shall be fine float finish. Application shall be unbroken to avoid cold joints.

i Curing Finish Coat: Except during damp weather surface shall be dampened slightly every twelve (12) hours after completion until it hardens.

DIVISION 9D: VINYL FLOORING

1. GENERAL

a. Include GENERAL CONDITIONS, SUPPLEMENTARY GENERAL CONDITIONS as part of this section.

b. Examine all other Sections of the Specifications for requirements that affect the work of this Section whether or not such work is specifically mentioned in this section.

c. Coordinate work with that of all other trades affecting or affected by the work of this section. Cooperate with such trades to assure the steady progress of all work under the contract.

d. SCOPE: Provide and install resilient flooring and base where called for on drawings and finish schedule.

e. RELATED SECTIONS: Division 1 GENERAL REQUIREMENTS; Division 3 CONCRETE ; Division 6B ROUGH CARPENTRY.

f. SHIPPING AND HANDLING AND STORAGE: All materials are to be delivered to the installation location within 48 hours of installation in its original packaging with labels intact. Store products in a dry area protected from the weather with temperatures maintained between 65°F (19°C) and 85°F (30°C). Do not stack pallets. Remove the tile from the cartons and stack evenly on a smooth dry surface with each stack no more than 18" high at least 48 hours prior to installation in order to acclimate. The installation area, substrate, tile, and adhesive are to be maintained between 65°F (19°C) and 85°F (30°C) for at least 48 hours before, during and after installation. Maintain room temperatures between 65°F (19°C) and 85°F (30°C) thereafter to prevent adhesive failure and to prevent distortion or destruction of the tile. Store boxes of tile above the ground slab. Protect boxes and all materials from damage by moisture, weather, and all other causes. Provide adequate ventilation to prevent condensation. Stack boxes without crushing. Contractor shall inspect all tile before installation and shall reject all chipped, cracked, discolored, defaced, or otherwise damaged tile.

g. SUBMITTALS: Contractor shall submit samples of all specified tile, and grout and shall submit manufacturer's data sheets for all sealer proposed.

h. WARRANTY: In addition to the standard warranties and guaranties of the material manufacturer, all tile.

1) Attention is directed to provisions in the GENERAL CONDITIONS regarding guarantees and warranties for work under this Division.

2) Applicable manufacturers shall provide their standard guarantees for work under this Section. However such guarantees shall be in addition to, not in lieu of all other liabilities which manufacturers and the Contractor may have by law or by other provisions of the Contract Documents.

2. MATERIALS

a. VINYL TILE: Vinyl floor tile shall be SafeTcork solid vinyl tile manufactured by Roppe Corporation, Fostoria, Ohio or approved equal by Owner.

1) Gauge: .080"
2) Size: 24"X 24"
3) Colors: Ivory, Sahara, and Moss in random patterns.

b. ADHESIVE

1) Adhesive shall be Roppe 535 "Universal" Urethane Enhanced Epoxy Two-Part Adhesive.

3. INSTALLATION: Concrete slab shall have a wet trowel finish properly prepared according to Roppe substrate preparation specifications.

DIVISION 9E: FLOORING - N.A.

DIVISION 9F: MARBLE TILE FLOOR

1. GENERAL

a. Include GENERAL CONDITIONS, SUPPLEMENTARY GENERAL CONDITIONS as part of this section.

b. Examine all other Sections of the Specifications for requirements that affect the work of this Section whether or not such work is specifically mentioned in this section.

c. Coordinate work with that of all other trades affecting or affected by the work of this section. Cooperate with such trades to assure the steady progress of all work under the contract.

d. SCOPE: Provide and install stone tile floor in Vestibule.

e. RELATED SECTIONS: Division 1 GENERAL REQUIREMENTS; Division 3

CONCRETE.

f. SHIPPING AND HANDLING AND STORAGE: All materials shall be delivered and stored under dry conditions. Store boxes of tile and grout above the ground slab. Protect boxes and all materials from damage by moisture, weather, and all other causes. Provide adequate ventilation to prevent condensation. Stack boxes without crushing. Contractor shall inspect all tile before installation and shall reject all chipped, cracked, discolored, defaced, or otherwise damaged tile.

g. SUBMITTALS: Contractor shall submit samples of all specified tile, and grout and shall submit manufacturer's data sheets for all sealer proposed.

h. QUALITY STANDARDS: Installation of all tile shall be in accordance with TILE council of America (TCA) handbook for the particular installation.

i. WARRANTY: In addition to the standard warranties and guaranties of the material manufacturer, all tile.

1) Attention is directed to provisions in the GENERAL CONDITIONS regarding guarantees and warranties for work under this Division.

2) Applicable manufacturers shall provide their standard guarantees for work under this Section. However such guarantees shall be in addition to, not in lieu of all other liabilities which manufacturers and the Contractor may have by law or by other provisions of the Contract Documents.

2. MATERIALS:

a. TILE: Field tiles shall be "Diana Royal" 18"X18" provided by Island City Tile, Key West or approved equal by Owner. Border tiles shall be six inches (6") wide cut from field tiles.

b. GROUT: Grout shall be latex, color to match lightest tone of color in tile.

c. THIN SET: Thin set shall be high strength latex fortified such as made by Laticrete, Jamo, or as approved by Owner's Representative. Latex additive may be used.

d. DRY PACK: Natural aggregate, high strength, non-shrink material designed specifically for mixing and placing at a damp pack consistency. Mix with a minimum of water, and place into voids and spaces to provide a level surface for thin set.

3. INSTALLATION

a. STANDARDS: Installation of all tile shall be in accordance with TCA Handbook.

b. LIGHTING CONDITIONS: Install all tile using lighting conditions that will closely approximate the proposed lighting in the areas involved in order to achieve uniformity in finished work.

c. TILE LAYOUT: As far as possible, lay out tiles so that no less than

half sizes occur. Work from middle of vestibule out and butt all joints. Joints shall be perfectly aligned. Field shall be placed at 45 degrees to walls and border tile. Border tiles shall surround the vestibule.

d. TILE COLORATION: All tile shall be inspected for damage, chipped edges, etc, and color before installation. Mis-colored, cracked, stained, or tile with chipped edges shall be discarded. Contractor shall lay out tile prior to commencing installation. Tile shall be laid out so that gradation in color and pattern is minimized.

e. DOOR THRESHOLDS AND DOORWAYS: Tile shall align with adjacent vinyl tile flooring at center of door when closed, so as to be unseen when doors are closed.

f. GROUT: Do not commence grouting for at least 24 hours after placing of tile. Follow specific instructions of listed standards. Do not grout until sealant has set up.

g. CURING: Cure grout joints by maintaining damp condition for three (3) days by sponging down, fog-spraying or other methods approved by the Architect. Allow floors to set 48 hours before permitting ordinary foot traffic. Cleaning: After tile has thoroughly set, sponge and wash tile thoroughly and diagonally across joints. remove all surface cement and take care not to damage tile or adjacent materials. Do not use acid cleaners.

h. CLEANING: After tile has thoroughly set, sponge and wash tile thoroughly and diagonally across joints. remove all surface cement and take care not to damage tile or adjacent materials. Do not use acid cleaners.

i. SEALING: Tile sealer shall be either that provided by Aqua Mix Company or Miracle Sealants Company using the product and application procedure recommended by the manufacturer for the particular stone or grout specified. Seal tile strictly according to sealer manufacturer's instruction, leaving the required curing time between coats. General Contractor shall coordinate all work in the vicinity of tile work so that newly sealed tile will not be walked upon until the time required by the sealer manufacturer has passed. No claims for delay of job will be considered in fulfilling this requirement.

j. PROTECTION: Protect tile after cleaning with non-staining heavy kraft paper or other approved coverage until acceptance of the building.

DIVISION 9G: HEART PINE FLOOR (ALTERNATE NO. 2)

1. GENERAL

a. Include GENERAL CONDITIONS, SUPPLEMENTARY GENERAL CONDITIONS as part of this section.

b. Examine all other Sections of the Specifications for requirements that affect the work of this Section whether or not such work is specifically mentioned in this

section.

c. Coordinate work with that of all other trades affecting or affected by the work of this section. Cooperate with such trades to assure the steady progress of all work under the contract.

d. SCOPE: Furnish and install heart pine flooring at Family Room.

e. RELATED SECTIONS: Division 1 GENERAL REQUIREMENTS; Division 3 CONCRETE ; Division 6B ROUGH CARPENTRY.

f. SHIPPING AND HANDLING: All materials shall be delivered to site in original packages or containers bearing manufacturer's brand name, type of material, and applicable standard designation. Delivery and storage of flooring shall be done under dry conditions. Flooring must be covered with a tarpaulin at all times during shipment to the jobsite. Flooring shall not be unloaded in the rain and must be stored either in an air-conditioned warehouse or, if at the jobsite, only after the building's air-conditioned system is operational and the permanent ambient air temperature and humidity has been achieved. Buckled, warped, or cupped stock will not be accepted and shall be discarded or returned to the manufacturer at the time of sticking.

g. SUBMITTALS: Contractor shall submit three pine planks eighteen inches (18") in length indicating the full range of grain configuration to be installed. Planks shall be finished exactly to the varnish specifications herein, and shall be use as control samples during the actual installation.

h. WARRANTY: Contractor shall warrant the pine floor for labor and materials against cupping, bowing, checking, splitting, squeaking, and finish failure, including discoloration and alligatoring for a period of five (5) years from its completion.

2. MATERIALS:

a. PINE FLOORING: Pine flooring shall be River Recovered Heart Pine Select as milled by Goodwin Heart Pine Co., Micanopy, FL or approved equal by Owner. Boards shall be 3-1/4" wide graded tongue and groove delivered at not more than 12% moisture content. Lengths shall be from two feet to twelve feet (2'-12') average length, with not more than 15% of the planks being from two to five feet in length.

b. UNDERLAYMENT: 3/4" B-C pine plywood or 3/4" A-C Douglas fir plywood. Underlayment shall not be pressure treated.

c. VAPOR BARRIER:

1) <u>On Top Of Concrete Under Underlayment</u>: 8 mil polyethylene with taped seams (if any).

2) <u>On Top Of Underlayment Under Wood Flooring</u>: Vapor barrier shall be "Aquabar B" as manufactured by Fortifiber Building Systems and available

through Goodwin Heart Pine or equal approved by Owner.

d. FASTENERS: Stainless steel.

e. ACCESSORIES: Contractor is responsible for providing all accessories necessary to install flooring.

3. INSTALLATION

a. VAPOR BARRIER: There shall be two (2) vapor barriers: On top of the slab under the underlayment and under the floor itself (two layers total).

1) On Top of Slab: Roll out polyethylene flattening it to the slab

2) On Top of Underlayment: Read manufacturer's instructions that come with the product.
Roll out, dimples down, allowing 1/4" opening from walls, stairs, pipe columns and other structures. Cut and overlap per instructions. Apply elastomeric caulking at all penetrations and joints.

b. UNDERLAYMENT: Underlayment shall be mechanically fastened to the slab 24" O.C. and 24" O.C. around perimeter.

c. PINE FLOORING: Before commencing installation of pine flooring the building must have acclimated to the air conditioning a point where the average moisture content of the framing members and underlayment is 14% or lower. The underlayment must be clean and thoroughly dry. Prepare boards as follows:

1) Seal back surfaces of all planks with a wood sealer.

2) Re-nail any loose areas of the underlayment and sweep clean.

3) Cut back boards up to 10" to remove prominent knots.

4) Use oldest flooring on jobsite first. Use long strips at entrances and doorways. Short pieces must be used at random and not be grouped.

5) Install to pattern provided by manufacturer or as approved by the architect and in the East-West direction. Use a slip-tongue at any change of direction.

6) Attachment shall be blind, six inches (6") on center using 1- 1/2" barbed stainless steel flooring cleats, with one at each end of individual boards.

7) Provide 1/2"– 3/4"expansion space at walls. Floor shall be laid before installing base and shoe molding.

8) Conspicuous dark boards in prominent locations will be rejected.

d. FINISHING

1) Sanding:

a) Floor shall be swept immediately before sanding.

b) Sanding Grit Standards:

Very Coarse: 20, 24, and 30
Coarse: 36 and 40
Medium: 50, 60, and 80
Fine: 80, 100, and 120
Very Fine: 120 and 150
Extremely Fine: 220

c) Floor shall be finished by a professional floor finisher with not less than ten years experience with finishing plank pine floors and shall be equipped with his own sanders, vacuums, buffers, scrapers, nailers, saws, machine parts, and accessories. At no time shall trainees or laborers be allowed to work unsupervised.

d) The sanding operation shall remove no more than 1/32" of wood.

e) Swirl scratches will not be accepted.

f) Hand sand perimeter and scraped areas. Hand scrape corners and areas inaccessible to machines.

2) Varnishing

a) Preparation of Floor: Inspect the floor, spot fill missed cracks, and nail holes with commercial flooring filler. When dry, hand sand with fine sandpaper with the same grit as final sanding. Completely sweep and vacuum the floor. Wipe and/or vacuum all dust on walls, ceiling, windows, sills, doors, doorframes, and baseboards.

b) **The finishing process shall begin immediately after sanding and cleaning is completed.**

c) Varnishing shall be done as follows unless approved otherwise by the Architect:

First Coat: ZAR 32813 High Gloss Oil-based Interior Fast-Dry Polyurethane for Floors cut 50% with mineral spirits. Let dry 24 hours.

Sand lightly with 220 grit.

Second Coat: ZAR 32813 High Gloss Oil-based Interior Fast-Dry Polyurethane cut 25% with mineral spirits. Let dry 24 hours.

Sand lightly with 220 grit.

Third (last) Coat: ZAR 32912 Satin Gloss Interior Oil-based Fast-Dry Polyurethane for Floors cut 10% with mineral spirits. Let dry 24 hours before covering with kraft paper.

d) Safety Considerations: If recommended by varnish manufacturer turn off the air-conditioning system and all gas flames. Open all windows to maximize ventilation but do not apply on a windy day or wet day. Always follow ALL of the manufacturer's safety precaution recommendations, including, but not limited to, skin contact, ventilation, breathing apparatus, fire hazards, and disposal. Open doors or use fans to exhaust moisture-laden air when finish

films over and is dust-free to facilitate curing. If recommended, buff all rough raised grain after first coat.

e) Application: Follow manufacturer's instructions regarding coverage figures and open time. Use catalyst, if required, stir in and let stand if recommended. Use non-metal trays and buckets. Follow buffing directions and use fiber pads or screens, or as specified herein.

DIVISION 10A: BATHROOM ACCESSORIES

1. GENERAL REQUIREMENTS

a. Include GENERAL CONDITIONS, SUPPLEMENTARY GENERAL CONDITIONS as part of this section.

b. Examine all other Sections of the Specifications for requirements that affect the work of this Section whether or not such work is specifically mentioned in this section.

c. Coordinate work with that of all other trades affecting or affected by the work of this section. Cooperate with such trades to assure the steady progress of all work under contract.

d. SCOPE: Furnish and install all toilet accessories, including towel bars, rings, and hooks; paper dispensers, soap dishes, etc.

e. RELATED SECTIONS: Division 1 GENERAL REQUIREMENTS; Division 4A CONCRETE MASONRY UNITS; Division 9A PAINT; Division 9B GYPSUM WALLBOARD;

f. DELIVERY, STORAGE, AND PROTECTION OF MATERIALS

1) All materials shall be brought to the site in manufacturer's original unbroken factory-sealed containers bearing the manufacturer's standard label indicating product, brand name, manufacturer, weight, product type, and color.

2) Handle and protect material from rain and moisture and contamination in transit and after arrival on the job.

g. WARRANTY: In addition to the standard warranties and guaranties of the material manufacturer, all tile.

1) Attention is directed to provisions in the GENERAL CONDITIONS regarding guarantees and warranties for work under this Division.

2) Applicable manufacturers shall provide their standard guarantees for work under this Section. However such guarantees shall be in addition to, not in lieu of all other liabilities which manufacturers and the Contractor may have by law or by other provisions of the Contract Documents.

h. MODELS: All Bathroom Accessories shall be stainless steel and manufactured by Bobrick Green or approved equal by Owner, as follows:

1) Paper Towel Dispenser: (1) B-253; (1) B262.
2) Toilet Tissue Dispenser: (2) B-685.
3) Grab Bars: (1) B-5806 X 42; (1) B-5806 X 36
4) Mirrors: (2) B-166 1830
5) Soap Dispenser: (2) B155

i. FINISH: Satin.

j. FASTENERS: Use Bobrick fasteners only in installation.

k. SUBMITTALS: Provide manufacturer's cut sheets to Owner's Representative for all items, identifying location and rough-out requirements.

l. COORDINATION: General contractor is to provide construction of all rough-outs, blocking, and grounds. Grab bars are to be mounted per FBC height A.F.F. See drawings for locations.

m. GROUNDS; Provide all necessary wall grounds for screw attachment per manufacturer's specifications. Gypsum fasteners will not be accepted.

DIVISION 10B: FRONT PORCH DOOR MAT

1. GENERAL REQUIREMENTS

a. Include GENERAL CONDITIONS, SUPPLEMENTARY GENERAL CONDITIONS as part of this section.

b. Examine all other Sections of the Specifications for requirements that affect the work of this Section whether or not such work is specifically mentioned in this section.

c.. SCOPE: Furnish and install interior floor mats.

d. DELIVERY, STORAGE, AND PROTECTION OF MATERIALS

1) All materials shall be brought to the site in manufacturer's original unbroken factory-sealed containers bearing the manufacturer's standard label indicating product, brand name, manufacturer, weight, product type, and color.

2) Handle and protect material from rain and moisture and contamination in transit and after arrival on the job.

e. WARRANTY: In addition to the standard warranties and guaranties of the material manufacturer, all tile.

1) Attention is directed to provisions in the GENERAL CONDITIONS regarding guarantees and warranties for work under this Division.

2) Applicable manufacturers shall provide their standard guarantees for work under this Section. However such guarantees shall be in addition to, not in lieu of all other liabilities which manufacturers and the Contractor may have by law or by other provisions of the Contract Documents.

f. MATERIALS:

1) Majestic Half-Oval Mat, Aquasorb Swirl, Black 71”X40” or approved equal by Owner.

DIVISION 11: EQUIPMENT - N.A.

DIVISION 12: BICYCLE RACKS

1. GENERAL REQUIREMENTS

a. Include GENERAL CONDITIONS, SUPPLEMENTARY GENERAL CONDITIONS as part of this section.

b. Examine all other Sections of the Specifications for requirements that affect the work of this Section whether or not such work is specifically mentioned in this section.

c.. SCOPE: Furnish and install bollard surface mount style with two arms bicycle racks.

d. DELIVERY, STORAGE, AND PROTECTION OF MATERIALS

1) All materials shall be brought to the site in manufacturer’s original unbroken factory-sealed containers bearing the manufacturer’s standard label indicating product, brand name, manufacturer, weight, product type, and color.

2) Handle and protect material from rain and moisture and contamination in transit and after arrival on the job.

e. WARRANTY: In addition to the standard warranties and guaranties of the material manufacturer, all tile.

1) Attention is directed to provisions in the GENERAL CONDITIONS regarding guarantees and warranties for work under this Division.

2) Applicable manufacturers shall provide their standard guarantees for work under this Section. However such guarantees shall be in addition to, not in lieu of all other liabilities which manufacturers and the Contractor may have by law or by other provisions of the Contract Documents.

f. MATERIALS:

1) Belson Outdoors Model No. BOL450-2R-SF-G with Stainless Steel Anchors or approved equal by Owner.

DIVISION 13: SPECIAL CONSTRUCTION - N.A.

DIVISION 14: CONVEYING SYSTEMS - N.A.

DIVISION 15A: PLUMBING

1. GENERAL REQUIREMENTS

a. Include GENERAL CONDITIONS, SUPPLEMENTARY GENERAL CONDITIONS as part of this section.

b. Examine all other Sections of the Specifications for requirements that affect the work of this Section whether or not such work is specifically mentioned in this section.

c. Coordinate work with that of all other trades affecting or affected by the work of this section. Cooperate with such trades to assure the steady progress of all work under the contract.

d. SCOPE OF WORK: Furnish and install a complete plumbing system. Furnish and install complete hot and cold water supply systems to service all fixtures and equipment indicated on the drawings, or specified as requiring cold water. Furnish and install complete system of vent and waste piping to vent all stacks, fixtures, traps, and appliances, as indicated on drawings and/or required to meet the Plumbing Code.

e. RELATED SECTIONS: Division 2B SITE PREPARATION; Division 3, CONCRETE; Division 4, CONCRETE MASONRY UNITS; Division 6A ROUGH CARPENTRY; Division 7A METAL V-CRIMP ROOF; Division 9B GYPSUM WALLBOARD; Division 10A BATHROOM ACCESSORIES; Division 15B HEATING VENTILATION AND AIR CONDITIONING; Division 16, ELECTRICAL.

f. DELIVERY, STORAGE, AND PROTECTION OF MATERIALS

1) All materials shall be brought to the site in manufacturer's original unbroken factory-sealed containers bearing the manufacturer's standard label indicating product, brand name, manufacturer, weight, product type, and color.

2) Handle and protect material from rain and moisture and contamination in transit and after arrival on the job.

3) Materials stored on site must be stored under roof and shall not be removed from their shipping boxes until ready to install.

g. PERMITS: Contractor shall obtain and pay for all permits, inspection, licenses, and certificates required for work under this Section.

h. CODES: Comply with laws, ordinances, rules and regulations of all Local, State, and Federal authorities having jurisdiction, the rules and regulations of the National Board of Fire Underwriters and of the Public Utility Companies serving the building.

i. GUARANTY: Plumbing Subcontractor shall guarantee that all elements of the systems are of sufficient capacity to meet the specified performance requirements as set forth herein or as indicated.

j. SUBMITTALS: Provide manufacturers data sheets for the Owner Representative's approval for all fixtures specified.

k. DRAWINGS: It is not intended that the drawings shall show every pipe, fitting, and appliance, but the Plumbing Subcontractor shall furnish and install all such parts as may be necessary to complete the systems in accordance with the best trade practice and to the satisfaction of the Architect. Drawings are generally diagrammatic and indicative of work to be installed. Runs and arrangements of piping shall be approximately as indicated, subject to modification as required to suit conditions at building, to avoid interference with work of other trades, or for proper, convenient and accessible location of all parts of piping systems.

l. COORDINATION: Keep other Subcontractors fully informed as to the shape, size, and position of all openings required for plumbing apparatus and give full information to the General Contractor and other Subcontractors sufficiently in advance of the work so that all openings may be built in advance. Furnish and install all sleeves, supports, etc., hereinafter specified or required.

m. MATERIALS:

1) Piping: Domestic cold and hot water piping and instant water heater piping: Copper tube type "K" or "L" with solder joints, minimum 125 lbs with WGO bronze valves.
2) Sanitary Waste and Vent: PVC plastic pipe. See riser diagrams for sizing.
3) Air Conditioning Condensate: Copper DWV and fittings or PVC pipe schedule 40.
4) Rough Hardware: Provide Simpson Z-max nail Stoppers at all stud walls where nails or screws from other trades can pierce water or sanitary piping.

n. INSULATION: All sanitary waste lines within walls shall be insulated for sound.

o. BELOW GRADE DOMESTIC WATER LINE PROTECTION: Provide 1/2" foam insulation around underground domestic water lines. Trenches for domestic water lines shall be covered on all sides with a minimum of 4" rice rock.

p. POINT-OF-USE HOT WATER HEATERS (DWH): Point-Of-Use Hot water heater shall be installed by the plumbing contractor and wired by the electrical contractor according to the manufacturer's installation manual, and shall be installed

in Room 6 (Storeroom) under counter in the location indicated on the Domestic Water Plan. Model shall be Rheem RTE 7 or approved equal by Owner. Provide manufacturer's Owner's Manual.

q. FIXTURES LIST:

1) Toilets

a) ADA Bathroom (Room 7): American Standard Cadet 3 Right-Height. 2589.101 Right side trip lever: 1.28 gpm or approved equal by Owner.
b) Employee's Bathroom (Room 8): American Standard Yorkville Pressure-Assisted Elongated Toilet. 1.6 gpm. 2878.016 or approved equal by Owner.

2) Lavatories

a) ADA Bathroom (Room 7): American Standard Wheel Chair Users Wall-Mount Sink. O436.008. Faucet: Moen Two-Handle Lavatory Faucet Model 8228F15 (1.5 gpm) Brushed Chrome or approved equal by Owner.
b) Employee's Bathroom (Room 8): American Standard All Purpose Sink. 0356.015. Faucet: Moen Two-Handle Lavatory Faucet Model 8228F15 (1.5 gpm) Brushed Chrome or approved equal by Owner.
c) Store Room (Room 6): Moen 222127 with 22037 basket Strainer. Faucet: Moen 8289 Chrome or approved equal by Owner.

r. APPLIANCE LIST:

1) Under-counter Refrigerator: Maytag 5.6 cu. ft. Model # MURM24FWBS or approved equal by Owner.

2) Disposal: Waste King L8000 Legend 1hp or approved equal by Owner.

DIVISION 15B: HEATING, VENTILATION, AND AIR CONDITIONING

1. GENERAL REQUIREMENTS

a. Include GENERAL CONDITIONS, SUPPLEMENTARY GENERAL CONDITIONS as part of this section.

b. Examine all other Sections of the Specifications for requirements that affect the work of this Section whether or not such work is specifically mentioned in this section.

c. Coordinate work with that of all other trades affecting or affected by the work of this section. Cooperate with such trades to assure the steady progress of all work under the contract.

d. DESIGN OF SYSTEM: The HVAC subcontractor shall size the unit, ducts,

registers and all components, and shall balance the system so as to obtain even comfort conditions without draft in all areas and deliver adequate air quantities without audible air noise.

e. SCOPE OF WORK: Furnish and install one ducted central air conditioning. See drawings for schematic distribution system.

ALTERNATE NO. 5: INSTALL AIR HANDLING UNIT IN THE ATTIC ABOVE THE EMPLOYEE'S BATHROOM.

This alternate requires the general contractor to delete the base bid AHU closet and convert the attic space above the employees bathroom (Room 8) into an AHU room, providing the necessary fire separation and ceiling height with stick framing. Duct distribution system redesigned accordingly as indicated on Drawings. The Communications Closet will shift to the closet adjacent to the bathroom.

f. RELATED SECTIONS: Division 4A, CONCRETE MASONRY UNITS; MASONRY; Division 6B ROUGH CARPENTRY; CARPENTRY AND MILLWORK; Division 7, ROOFING; Division 9, FINISHES; Division 11, EQUIPMENT; Division 16, ELECTRICAL.

g. DELIVERY, STORAGE, AND PROTECTION OF MATERIALS

1) All materials shall be brought to the site in manufacturer's original unbroken factory-sealed containers bearing the manufacturer's standard label indicating product, brand name, manufacturer, weight, product type, and color.

h. COORDINATION: Coordinate work with that of all other trades affecting, or affected by work of this Section. Cooperate with such trades to assure steady progress of all work under the Contract.

i. WIRING: Power wiring, starters, disconnect switches and electric interlock wiring not specified herein shall be furnished and installed under ELECTRICAL Section except starters which are an integral part of heating and air conditioning equipment.

j. SUBMITTALS: Submit catalog cuts for the following:

1) Compressor Unit
2) Air Handling Unit
3) All air registers
4) Filters
5) Ductwork
6) Thermostat
7) Bathroom Exhaust Fans
8) Attic Exhaust Fan

k. DRAWINGS: It is not intended that the Drawings shall show every pipe, fitting and appliance, but the HVAC Subcontractor shall furnish and install all such parts as may be necessary to complete the systems in accordance with

the best trade practice and to the satisfaction of the Owner's Representative and Mechanical Engineer.

2. MATERIALS

a. COMPRESSOR: Compressor shall be of the welded-hermetic type specified with internal vibration isolation and be covered with a shield to muffle operating sound. Compressor motor power inputs shall not exceed the manufacturer's specified operating conditions. New system shall have a SEER of 16. The units shall contain sufficient refrigerant charge for complete system. System shall be equipped with refrigerant line fittings which permit mechanical or sweat connections. Brass service valves with fittings and gage ports shall be located on exterior of units. Compressors shall be mounted on a level elevated stand (see below).

b. AIR HANDLER: Air Handling Unit shall have electric heating coils to meet heating requirements of spaces served. Air handlers shall be mounted atop vibration dampers.

c. AIR FILTRATION: The HVAC system shall be equipped with air filtration rating of MERV 13 or better.

d. REFRIGERANT LINES: Refrigerant lines shall be Type L Copper or as indicated on the drawings. Joints shall be silver soldered. Refrigerant lines shall be as short as possible to minimize heat gain and pressure drop, but not more than 50 feet in length with a vertical length of less than 20 feet. Refrigerant lines shall be pitched and trapped according to manufacturer's requirements. Bends and elbow shall have a radius of not less than twice the pipe diameter. Lines shall be supported with hangers that avoid cutting the line or its insulation. Suction lines shall be insulated with a minimum of on-half inch (1/2") thick closed cell elastomeric foam pipe insulation to prevent condensation and heat gain. Refrigerant line insulation located outside must have a waterproof covering and must be protected from ultraviolet radiation.
Building penetrations for refrigerant lines must be caulked (color to match surrounding material); Entry holes into indoor units must be sealed.

e. CONDENSATE DRAIN LINES: Provide condensate drain lines to the outside. Provide a P-trap at discharge.

f. DUCTS

1) Air conditioning trunk ductwork shall be constructed of one and one half inch thick R-6 min. fiberglass duct board with reinforced aluminum foil faced covering fabricated and installed per S.M.A.C.N.A. recommendations. Use R-4.2 in conditioned spaces.

2) All duct elbows greater than 45 degrees shall be fitted with turning vanes.

3) Flexible duct, when approved by the Owner's Representative shall be factory fabricated round ducts composed of corrosion resistant reinforcing wire helix permanently bonded and enclosed in polyester film, then covered with 1-1/2" ¾ PCF (R-6) density fiber glass insulation blanket sheathed in a

vapor barrier of aluminum metalized polyester film laminated to wire mesh, elastomeric back coated.

4) Duct Turns: Air turns shall be quiet and free from vibration. Offsets shall be made in a gradual manner.

g. BATHROOMS AND MAINTENANCE ROOM EXHAUST FANS:

1) Remote fans are to be ducted to the outside, discharged from the roof, as indicated on the plans. Fans are to be switched from wall switches in each space, connected to room lights.

2) Manufacturer and Models:

a) EF-1(One Fan - Room 7): Fantech FR 125 or approved equal by Owner in-line exhaust fan. Provide Fantech accessories including but not limited to ceiling grill, ducting, clamps, roof exhaust hood, damper, and controls to fully equip system for everyday performance with warranty. See drawings for location.

b) EF-2 (One Fan for two rooms – Room 8 and Room 9): Fantech FR 150 or approved equal by Owner in-line exhaust fan. Provide Fantech accessories including but not limited to ceiling grills, ducts and T connection, clamps, roof exhaust hood, damper, and controls to fully equip system for everyday performance with warranty. See drawings for location.

3) Coordinate location of all visible components with the Owner. Refer to the reflected ceiling plan. Provide complete submittals.

h. SOLAR POWERED ATTIC EXHAUST FAN: Furnish and install the following solar powered attic exhaust fan as follows:

1) Manufacturer: Attic Breeze or approved equal by Owner

2) Model: The Zepher AB-201A-NAT.

3) Provide the following Options:
a) Breeze Mate control system
b) Pivot Bracket

4) Interface with Roofer: GC shall assure coordination between roof in contractor and fan installer.

5) Location: See drawings for location.

i. LOW VOLTAGE WIRING: Provide all low voltage wiring for HVAC system

j. JOINTS AND SEAMS: Joints and seams in all supply ductwork shall be sealed. All adhesive and mastic shall be a fire resistant type and meet the Florida energy code requirements.

k. THERMOSTAT: Digital, programmable, hardwired, with advanced installer settings by Jackson Systems.

l. CONTROLS: Controls shall be factory wired and located in a readily accessible location

m. PAD AND ATTACHMENT: Condensing units shall be securely bolted to a steel stand outside the building that is bolted to a concrete pad to prevent movement and vibration and to withstand winds as required by law. The bottom of the compressor shall be at or above flood level. See plans for location.

n. DIFFUSERS: All wall and ceiling diffusers, grilles, and registers shall be manufactured by Titus or as approved by the architect. Contractor shall submit catalog cuts of all diffusers for the architect's and engineer's approval.

o. SLEEVES: Furnish and install all sleeves, supports, etc., hereinafter specified or required.

p. STRUCTURAL CUTTING: All structural cutting is to be done by General Contractor.

q NAIL STOPPERS: Provide Simpson Z-max nail Stoppers at all stud walls where nails or screws from other trades can pierce HVAC lines.

r. TESTING: The contractor, through his subcontractors, shall be responsible for his work and equipment until finally inspected, tested, and accepted. Carefully store materials and equipment that are not immediately installed after delivery to site. Close open ends of work with temporary covers or plugs during construction to prevent entry of obstructing material.

SECTION 16: ELECTRICAL

1. GENERAL REQUIREMENTS

a. Include GENERAL CONDITIONS, SUPPLEMENTARY GENERAL CONDITIONS as part of this section.

b. Examine all other Sections of the Specifications for requirements that affect the work of this Section whether or not such work is specifically mentioned in this section.

c. Coordinate work with that of all other trades affecting or affected by the work of this section. Cooperate with such trades to assure the steady progress of all work under the contract.

d. RELATED SECTIONS: Division 2, SITEWORK; Division 3, CONCRETE; Division 4, MASONRY; Division 6, CARPENTRY AND MILLWORK; Division 9, FINISHES; Division 11, EQUIPMENT; Division 15B, HVAC.

e. DELIVERY, STORAGE, AND PROTECTION OF MATERIALS: All materials

shall be brought to the site in manufacturer's original unbroken factory-sealed containers bearing the manufacturer's standard label indicating product, brand name, manufacturer, weight, product type, and color.

f. SHEET NOTES: Refer to drawings for additional requirements.

g. COORDINATION WITH OTHER TRADES: The General Contractor shall be responsible for coordinating the work of the electrical contractor with other trades. Subcontractor shall keep other Subcontractors fully informed as to the shape, size, and position of all openings required for electrical conduit and apparatus and give full information to the General Contractor sufficiently in advance of the work so that all openings may be built in advance. Furnish and install all sleeves, supports, etc., hereinafter specified or required.

h. SCOPE OF WORK: Provide all labor, material equipment, appurtenances, and services necessary for an incidental to the completion of all work in this Division, as indicated on the Drawings and as specified, unless specifically accepted. The following items are a partial outline of the work of this Division.

1) Load centers.

2) Over current protection.

3) Branch wiring.

4) Conduit and cable trays.

5) Lighting fixtures and lamps.

6) Wiring devices.

7) Grounding and bonding.

8) Temporary wiring.

9) Cutting and drilling for concealed wiring and boxes.

10) Testing.

i. PERMITS: Contractor shall pay for all permits, inspection, licenses, and certificates required for work under this section.

j. CODES: Comply with laws, ordinances, rules, and regulations of the Florida Building Code, the City of Key West Ordinance. The rules and regulations of the National Board of Fire Underwriters, the Life Safety Code, NFPA, UL, NEMA, and OSHA and the National Electric Code will be referred to as authority, as required.

k. INSPECTIONS: Electrical contractor shall not call for his inspections without the approval of the general contractor.

l. GUARANTEE: All materials and workmanship are to be guaranteed against defects for a period of one (1) year from date of acceptance.

m. TEMPORARY POWER: Upon commencement of work, Electrical Contractor shall provide temporary establish an electrical service to provide power to the jobsite. It shall be mounted on a pole, meeting all code requirements for the application. The power must come from a separate outlets, as necessary to service construction work, using new wiring (Romex Cable permitted). Outlets shall be GFI. Provide temporary lighting according to code. In the event that the contractor wishes to use the Owner's power, he must have the owner's permission in writing.

n. MANUFACTURER'S INSTRUCTIONS: Install all products in strict accordance with manufacturer's recommendations. Provide complete owner's manuals for all equipment.

o. WIRING METHODS: Without limiting the requirements of work to be performed, the basic wiring methods and materials to be employed in this Section are as follows:

1) Hollow partitions, and other dry voids: Conduit

2) Branch circuits: EMT

3) Feeder and/or sub feeders: New raceway in conformance with National Electric Code.

4) Masonry and concrete construction: Use EMT where furred, PVC schedule 40 where imbedded.

5) Outdoor: Schedule 40 PVC heavy wall underground, under floor slabs and walkways to depth per NEC.

6) Insulated ground shall be installed with phase conductors.

7) Panel boards shall be of the same manufacturer throughout, supplied by a single manufacturer, Westinghouse, Square D, or General Electric.

p. PANEL SCHEDULES: The electrical contractor's work shall not be complete until complete panel schedules are permanently affixed to panel doors. Schedules must be typed, legible, indelible, and suitable for use by the owner. All breakers shall be clearly numbered and correspond to the schedule. Provide a copy of each schedule with the project close-out documents.

q. TESTING: Test all equipment before turning over completed work to Owner.

r. CLOSE-OUT DOCUMENTS: Close-out documents shall consist of, but not be limited to:

1) Warranties

2) Panel Schedules

3) Owner Manuals

s. GROUNDING: Verify grounding continuity at each receptacle outlet and fixture.

t. CLEANING: Panels, disconnects, starters, and similar items shall be cleaned and left in a neat manner, and painted where finish material has been removed.

u. NAIL STOPPERS: Provide Simpson Z-max nail Stoppers at all stud walls where nails or screws from other trades can pierce electrical lines.

v. DEVICES: Devices shall be commercial grade Leviton of a color and style selected by the Owner.

w. LIGHTING FIXTURES: Provide lighting fixtures and lamps as indicated on fixture schedule.

x. TELEPHONE LINES: Furnish and install all communication lines.

1) Communication cable shall be four pair unshielded and twisted pair (CAT 6), unless otherwise indicated.

2) Provide dedicated lines as indicated on plans.

3) All communication wiring shall be run in conduit.

4) All underground and television shall be run in Schedule 40 PVC conduit.

5) Underground cable should be specified as "flooded," meaning filled with gel, where it is subject to water.

6) Coordination with Bellsouth, KES etc responsibility of GC.

7) Coordinate Voice Over IP System with City of Key West IT department.

y. SMOKE DETECTORS:

1) Provide First Alert SA302CN or approved equal by Owner hard-wired, interconnected smoke detectors as indicated on the drawings. Refer to the architectural reflected ceiling plan for locations of smoke detectors.

2) If the building inspector requires smoke detectors other than those shown on the drawings they must, for appearance, be placed in line with adjacent lights or diffusers as indicated by the Owner's Representative. See Division 1, GENERAL REQUIREMENTS for instructions regarding changes to the design ordered by the building official.

End of Specifications

CITY OF KEY WEST
SEXTON'S HOUSE

KEY WEST CEMETERY
701 PASSOVER LANE
KEY WEST, FLORIDA

INDEX OF DRAWINGS

SHEET NUMBER	TITLE
C1	SITE PLAN, SITE DATA AND SITE DETAILS
C2	DEMOLITION SITE PLAN
A1	FIRST FLOOR AND REFLECTED CEILING PLAN
A2	SCHEDULES AND DETAILS
A3	ROOF PLAN AND DETAILS
A4	EXTERIOR ELEVATIONS
A5	BUILDING SECTIONS
A6	WALL SECTIONS AND DETAILS
A7	PORCH DETAILS
A8	INTERIOR ELEVATIONS AND DETAILS
S1	FOUNDATION PLAN AND WALL REINFORCEMENT PLAN
S2	ROOF FRAMING PLAN AND STRUCTURAL DETAILS
S3	STRUCTURAL DETAILS
E1	ELECTRICAL PLANS,
E2	ELECTRICAL PANEL SCHEDULE, RISER DIAGRAMS AND LIGHT FIXTURE SCHEDULE
M1	HVAC PLANS AND DETAILS
P1	PLUMBING PLANS AND ISOMETRICS

MICHAEL MILLER ARCHITECTS

517 DUVAL STREET
KEY WEST, FLORIDA
(305) 294-7687

Copyright © 2014 Michael Miller Architecture Inc. The design or any part of it and/ or the drawings on this sheet may not be used without written permission of Michael Miller, Architect.

2/10/15

ITB 15-013 DRAWINGS FOR CONSTRUCTION

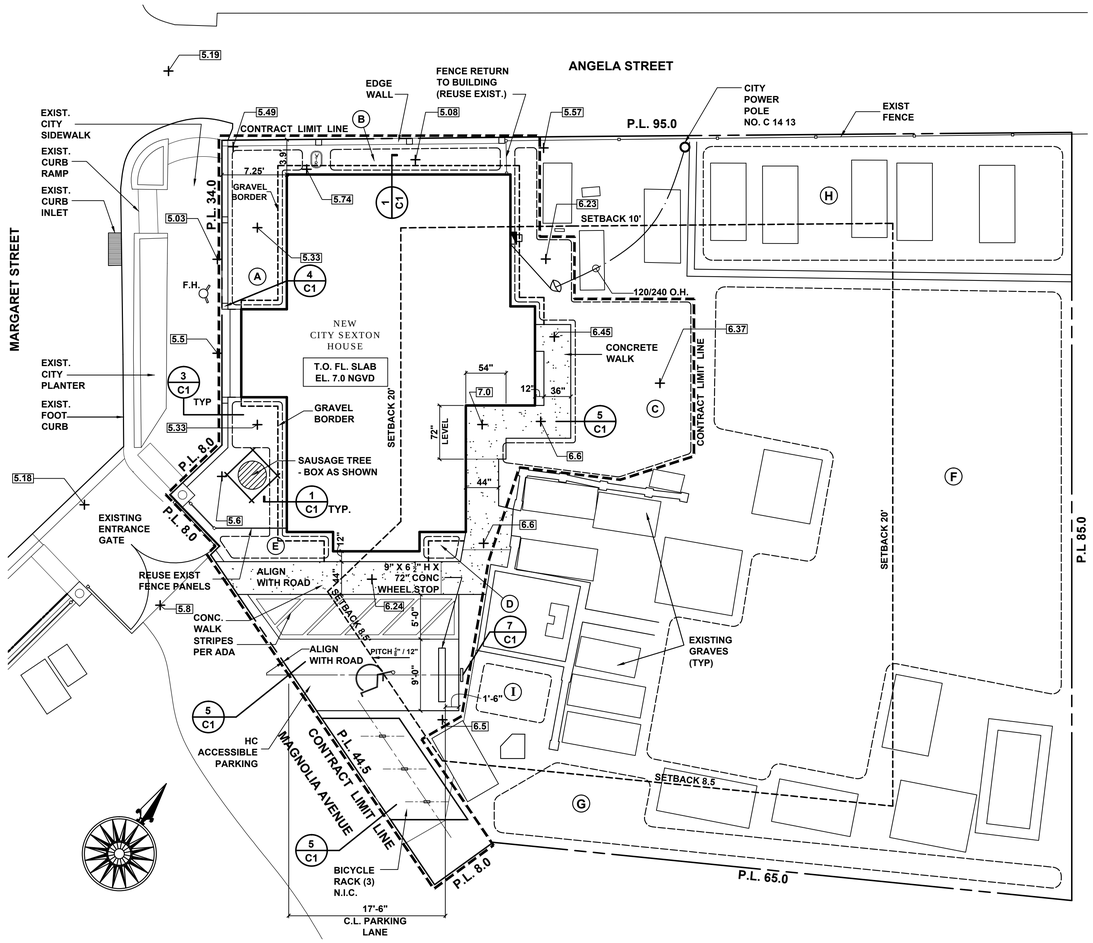

1 / C1 SITE PLAN
SCALE: 1/8"=1'-0"

PLANNING DATA

CITY ZONING REQUIREMENTS

ZONE:	HPS
SETBACKS	
Front (West)	20 FT
Side (South)	8.5 FT
Rear (East)	20 FT
Street Side (North)	10 FT
PROPOSED SETBACKS	
Front (West)	0.9 FT
Side (South)	8.5 FT
Rear (East)	20 FT
Street Side (North)	3.9 FT
LOT SIZE	7,419.6 SF
LOT COVERAGE	
Allowable	40%
Proposed	14%
IMPERVIOUS COVERAGE	
Allowable	50%
Proposed	46.6%
BUILDING HEIGHT	
Allowable	25 FT
Proposed	16'- 6" FT
FEMA FLOOD ZONE	AE 6
FINISH FLOOR ELEVATION	7.0 NGVD

FBC

OCCUPANCY CLASSIFICATION	GROUP B CIUIC ADMIN
CONSTRUCTION TYPE	TYPE 3
OCCUPANT LOAD	ALLOWANCE 100 GSF /OCCUPANT (GROUP B) 8 MAX.
NUMBER OF EXITS	TWO REQUIRED, TWO PROVIDED
EXIT DISCHARGE	MEETS FBC
ADA ACCESS	MEETS ADA
EXIT ACCESS TRAVEL DISTANCE	200 FT MIN. (20 PROVIDED)

STORMWATER RETENTION CALCULATION

A. LOT AREA: 7,419.6 SF

B. DISTURBED (IMPERVIOUS) AREAS

1. Roofed Structures 1,198.1 SF
2. Paving, Graves and Parking 2,158.2 SF
   Total 3,356.3 SF

Proposed Lot Coverage Percentage: 46.6%

C. STORM DRAINAGE CALCULATIONS

1. Impervious Coverage = 46.6%
2. Rainfall = .466 X 2.5 In = 1.17 IN
3. Cubic Feet of Retention Required =

   Lot Area in SF X Rainfall in Inches / 12

   = 7,419.6 SF X 1.7 In / 12 = 1051 CU FT

4. Retention Area Provided Using Entire Property

Swale Ⓐ	3.5 SF
Swale Ⓑ	38 SF
Swale Ⓒ	352 SF
Swale Ⓓ	10 SF
Swale Ⓔ	70 SF
Swale Ⓕ	2,297 SF
Swale Ⓖ	235 SF
Swale Ⓗ	240 SF
Swale Ⓘ	64 SF
	3,389 SF

5. Average Depth of Swales Required =

   1,051 CU FT / 3,389 SF = .31 FT = 3.73 IN

BECAUSE IT IS IMPRACTICAL TO CREATE NEW SWALES AT ANY OTHER LOCATION THAN WITHIN THE CONTRACT LIMIT LINES ONLY SWALES A THROUGH E (THOSE DIRECTLY AROUND THE BUILDING WILL BE USED FOR EFFECTIVE STORMWATER RETENTION. THUS:

6. Effective Retention Area Using only Swales around New Building

Swale A	93.5 SF
Swale B	38 SF
Swale C	352 SF
Swale D	10 SF
Swale E	70 SF
	533 SF

7. Cubic Feet of Retention Required Around New Building

   = Disturbed Area in SF Around Building X Rainfall in Inches / 12

   = 2,138* SF X 1.7 IN / 12 = 305 CU FT

8. Average Depth of Swales Required around New Building

   = 305 CU FT / 533 SF = .57 FT IN = 6.84 IN

CONTRACTOR SHALL MAKE SWALES A-E AN AVERAGE DEPTH OF 6.84 IN.

SHEET NOTES:

1. Drawings and specifications are to be used together. Contractors and workers shall consult both when questions concerning the letter and/or intent of the design arise.

2. No changes to the drawings or to the design may be made without the written approval of the architect and Owner's representative.

3. All work shall be done in accordance with all applicable local, state, and national building and life safety codes. The contractor and all Subcontractors shall be familiar with these codes and shall build accordingly.

4. When a conflict or ambiguity exists between a Contractor's understanding of a code and the drawings and specifications, it is the Contractor's responsability to cease work on the item in question and notify the owner's representative in a manner that will allow a timely resolution. Work undertaken as instructed by the building inspector without the Architect's or Owner's representative's permission will be removed at the Contractor's expense.

5. When a conflict or ambiguity exists between the drawings or within the specifications, or if the contractor cannot find information he needs on the drawings or in the specifications it is the responsibility of the Contractor cease work on the item in question and notify the Owner's representative in a manner that will allow timely resolution.

6. In general, interior dimensions are taken from the face of stud or furring strip. Nominal dimensions are noted for standard lumber sizes but actual sizes are given where lumber is to be milled to a non-standard dimension. Exterior dimension lines are taken from face of concrete (e.g. not from the face of the stucco finish).

7. Drawings shall not be scaled. Where errors or inconsistencies exist regarding dimensions on the drawings, the Contractor shall notify the Owner's representative for a resolution before proceeding.

8. "V.I.F." means "Verify in Field". It is the Contractor's responsibility to measure or otherwise confirm a site condition that cannot be accurately determined before construction begins, and to notify the Owner's representative if it differs from what is on the drawings before proceeding with the affected work.

9. The Drawings, Specifications, and other documents prepared by the Architect, belong to the city of Key West and are Copyright © 2014 by Michael Miller, Architects INC ARC10013216.

10. The site and floor plans are laid out according to the survey provided by the Owner, The Contractor shall verify any inconsistencies between the drawings and field conditions before proceeding with the affected work.

CONFORMS TO FLORIDA BUILDING CODE 2010
ASCE 7-10: CATEGORY C WIND LOADING

MICHAEL MILLER ARCHITECTS
517 DUVAL STREET
KEY WEST, FLORIDA
(305) 294 - 7687

CITY SEXTON'S HOUSE
KEY WEST CEMETERY

701 PASSOVER LANE
KEY WEST, FLORIDA

DATE: MAY 22, 2014
SCALE: AS NOTED
DRAWN BY: AA, AR, AG
CHECKED BY: MM
PROJECT NO: 1203

SITE PLAN, SITE DATA AND SITE DETAILS

C1

Copyright © 2014 Michael Miller Architecture Inc. The design or any part of it and/ or the drawings on this sheet may not be used without written permission of Michael Miller, Architect.

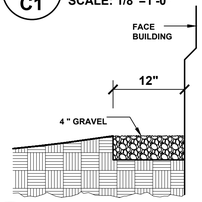

1 / C1 GRAVEL BORDER
SCALE: 1"=1'-0"

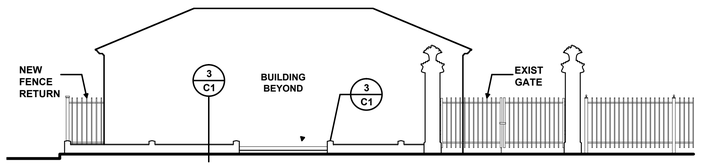

2 / C1 EDGE WALL ELEVATION
SCALE: 1/8"=1'-0"

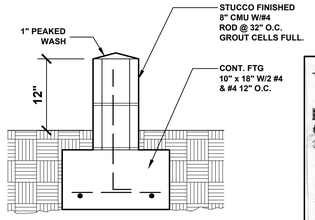

3 / C1 EDGE WALL
SCALE: 1"=1'-0"

PROJECT LOCATION

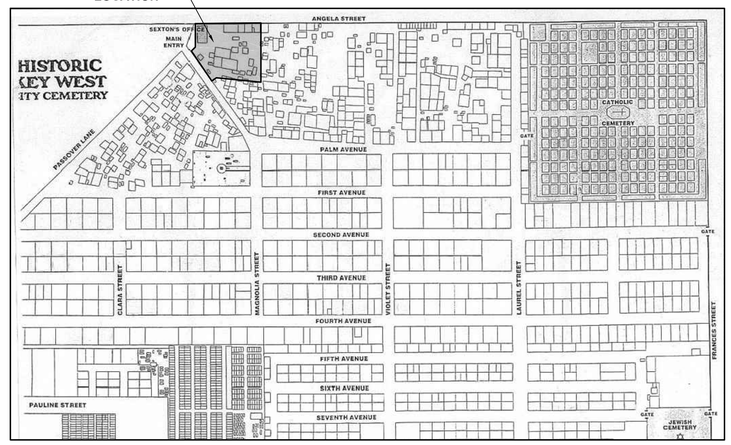

KEY WEST CEMETERY

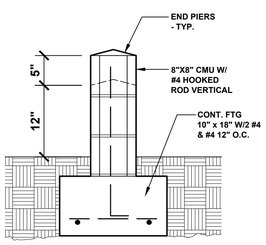

4 / C1 EDGE WALL PIER
SCALE: 1"=1'-0"

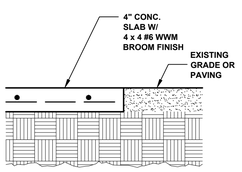

5 / C1 CONCRETE SIDE WALK
SCALE: 1"=1'-0"

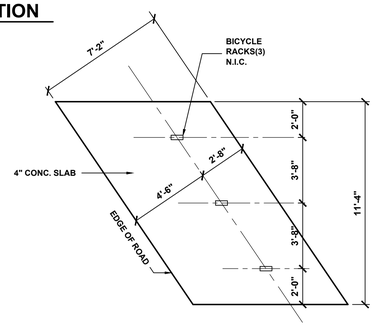

6 / C1 BICYCLE RACK SLAB
SCALE: 1/4"=1'-0"

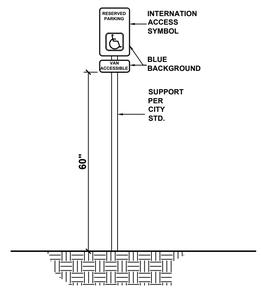

7 / C1 VAN ACCESSIBLE PARKING SIGN
SCALE: 1/2"=1'-0"

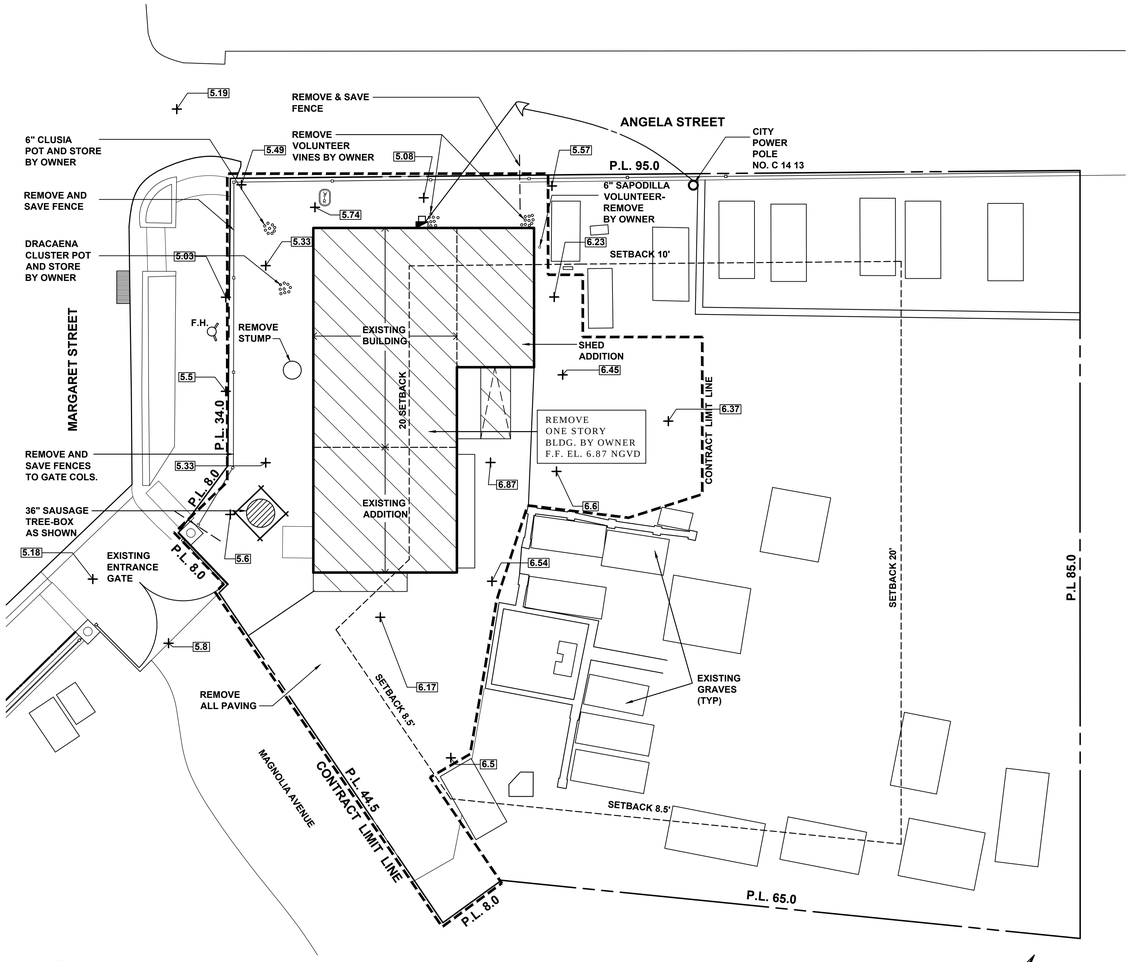

1 / C2 **EXISTING SITE PLAN**

SCALE: 1/8"=1'-0"

PROJECT ABBREVIATIONS LEGEND :

ACRY	*ACRYLIC*	DWGS	*DRAWINGS*	LAM	*LAMINATED*	STL	*STEEL*
ADA	*AMERICAN DISABILITIES ACT*	EA	*EACH*	LAV	*LAVATORY*	T	*TREAD*
ADJ	*ADJUSTABLE*	E.S.	*EACH SIDE*	MARB	*MARBLE*	T.O.	*TOP OF*
ALUM	*ALUMINUM*	EXIST	*EXISTING*	MFR	*MANUFACTURE*	TPD	*TOILET PAPER DISPENSER*
BACKSPL.	*BACKSPLASH*	FAC	*FACTORY FINISHED*	MG	*MARINE GRADE*	TRL	*TROWEL*
BR	*BROOM*	FC	*FIRECODE GWB*	MRB	*MOISTURE RESISTANT BOARD*	UNFIN	*UNFINISHED*
CAB	*CABINET*	FIX.	*FIXED*	MTL	*METAL*	V	*VERTICAL*
CARP	*CARPET*	FLR.	*FLOOR*	NTS	*NOT TO SCALE*	VARN	*VARNISHED*
CFB	*CEMENT FIBER BOARD*	FLRG.	*FLOORING*	O.C.	*ON CENTER*	VB	*VINYL BASE*
CLG	*CEILING*	FM	*FRAME/FRAMING*	PLAS	*PLASTIC*	VCB	*VINYL CARPET BASE*
CMU	*CONCRETE MASONRY UNIT*	FRM.	*FROM*	PLY	*PLYWOOD*	VIF	*VERIFY IN FIELD*
C.O. (ELEC.)	*CONVENIENCE OUTLET*	FTG	*FOOTING*	PNT	*PAINT*	VT	*VINYL TILE*
C.O. (PLUMB.)	*CLEAN OUT*	GL	*GLASS*	PREP	*PREPARED*	W/	*WITH*
COL	*COLUMN*	GWB	*GYPSUM WALL BOARD*	Q.R.	*QUARTER ROUND*	WC	*WATER CLOSET*
CONC	*CONCRETE*	HOR.	*HORIZONTAL*	R	*RISER*	WD	*WOOD*
CONT	*CONTINUOUS*	H.	*HORIZONTAL*	REFRIG	*REFRIGERATOR*	WDO	*WINDOW*
C.T.	*CERAMIC TILE*	HN	*HONED*	REQ'D	*REQUIRED*	@	*AT*
DR	*DOOR*	HB	*HOSE BIBB*	RFL	*RESILIENT FLOOR TILE*		
DRW	*DRAWER*	HSS	*HIGH STRENGTH STEEL*	S.A.	*SMOKE ALARM*		
DWG	*DRAWING*	HTB	*HARDIE TRIM BOARD*				

SITE DEMOLITION NOTES

1. **SCOPE OF WORK: BY CITY The demolition work consists of the demolition of the existing Sexton's House at the Key West Cemetery and the legal removal and disposal of all demolished material, and the removal for Owner's reuse of landscape and fencing material.**

2. **ARCHEOLOGICAL CONSIDERATIONS: The site is part of an historic burial ground and may or may not have important artifacts below the existing house. The contractor may not commence work until his methods and plans have been review and coordinated with the Owner's representative. If during demolition an artifact is unearthed the demolition work shall cease immediately and the Owner's representative notified. Work may not again commence until approved by the Owner's representative.**

3. **CONTRACT LIMIT LINE: See Demolition Plan, this sheet for location of contract limit line.**

4. **SPECIFICATIONS: Contractor shall familiarize himself with Division 1, GENERAL REQUIREMENTS and Division 2A, DEMOLITION before commencing demolition. Also, examine all other Sections of the Specifications for requirements that affect the work of this Section whether or not such work is specifically mentioned in this section.**

5. **CODES: All work shall be in conformity with the Florida Building Code 2010 Edition and all applicable laws, codes, and ordinances of the City of Key West.**

6. **SAFETY: The Contractor shall provide for the safety, prevention of injury, and loss of property at the job site to all persons employed on the work, persons visiting the work, cemetery employees, and the general public and shall save the Owner and Architect and his consultants harmless from all claims arising from the use of public streets, sidewalks, and adjoining premises for construction purposes.**

7. **PROTECTION OF PROPERTY: The contractor shall be wholly responsible for protecting the work under construction, construction materials stored on site, and the Owner's property adjacent to or in the path of the work, and shall insure himself for any losses, damages, or injuries related herein.**

8. **USE OF ADJACENT STREETS AND SIDEWALKS: Unless permitted in writing by the owner's representative to use adjacent streets and sidewalks Contractor shall keep all public streets and sidewalks adjacent to the property clear of debris, materials, and construction equipment during work. Repair all public property where disturbed or damaged during construction and leave them is as good condition after the completion of work as before operations began.**

9. **TEMPORARY FENCING AND BARRICADE: Install temporary fencing and barricades along the contract limit lines as described in Division 2A DEMOLITION, Section 8. See Sheet 2A for location of contract limit line.**

10. **PERMITS: Contractor shall be responsible for procuring all necessary construction permits. The cost of the permits shall be reimbursable to the Owner.**

11. **REMOVAL OF UTILITIES: Contractor is responsible for identifying and locating all utilities. Contractor responsible for damage to any utility. Before demolishing and removing any part of the existing electrical, water and sanitary sewer system the Contractor shall notify the Owner's representative, city departments having jurisdiction, and utility companies, and confirm that these items are out of service and can be removed without danger. Water lines to be demolished shall be disconnected and capped by the Contractor. Abandoned sewer lines shall be plugged with concrete. Utilities to remain shall be capped in place.**

12. **REMOVAL OF FOUNDATIONS AND BELOW GRADE STRUCTURES: Structures below grade shall be removed strictly to the instructions of the Owner's representative.**

13. **STAGING AND SPOILS: Contractor shall meet with the Owner's Representative prior to commencing work and together shall determine where within the contract limit lines the job shall be staged and where spoils shall be temporarily stored.**

14. **TEMPORARY SHORING: Provide all temporary shoring and bracing necessary to withstand winds and other loads during demolition.**

15. **FIRE EXTINGUISHERS: Provide two (2) 10 lb ABC fire extinguishers ready for instant use during duration of demolition.**

16. **DUST CONTROL: Provide hosed water during demolition to control dust from becoming a nuisance and hazard to the public and neighborhood.**

17. **SMOKE FREE WORKSITE: All Contractors and sub-contractors shall abide by this regulation. Anyone caught smoking on the worksite will be warned once, second will be removal from job.**

18. **Any damage to asphalt roadways within the cemetery due to construction work will be the general contractors responsibility to repair to the city's satisfaction.**

SHEET NOTES:

1. Drawings and specifications are to be used together. Contractors and workers shall consult both when questions concerning the letter and/or intent of the design arise.

2. No changes to the drawings or to the design may be made without the written approval of the architect and Owner's representative.

3. All work shall be done in accordance with all applicable local, state, and national building and life safety codes. The contractor and all Subcontractors shall be familiar with these codes and shall build accordingly.

4. When a conflict or ambiguity exists between a Contractor's understanding of a code and the drawings and specifications, it is the Contractor's responsability to cease work on the item in question and notify the owner's representative in a manner that will allow a timely resolution. Work undertaken as instructed by the building inspector without the Architect's or Owner's representative's permission will be removed at the Contractor's expense.

5. When a conflict or ambiguity exists between the drawings or within the specifications, or if the contractor cannot find information he needs on the drawings or in the specifications it is the responsibility of the Contractor cease work on the item in question and notify the Owner's representative in a manner that will allow timely resolution.

6. In general, interior dimensions are taken from the face of stud or furring strip. Nominal dimensions are noted for standard lumber sizes but actual sizes are given where lumber is to be milled to a non-standard dimension. Exterior dimension lines are taken from face of concrete (e.g. not from the face of the stucco finish).

7. Drawings shall not be scaled. Where errors or inconsistencies exist regarding dimensions on the drawings, the Contractor shall notify the Owner's representative for a resolution before proceeding.

8. "V.I.F." means "Verify in Field". It is the Contractor's responsibility to measure or otherwise confirm a site condition that cannot be accurately determined before construction begins, and to notify the Owner's representative if it differs from what is on the drawings before proceeding with the affected work.

9. The Drawings, Specifications, and other documents prepared by the Architect, belong to the city of Key West and are Copyright © 2014 by Michael Miller, Architects INC ARC10013216.

10. The site and floor plans are laid out according to the survey provided by the Owner, The Contractor shall verify any inconsistencies between the drawings and field conditions before proceeding with the affected work.

CONFORMS TO FLORIDA BUILDING CODE 2010
ASCE 7-10: CATEGORY C WIND LOADING

MICHAEL MILLER ARCHITECTS

517 DUVAL STREET
KEY WEST, FLORIDA
(305) 294 - 7687

CITY SEXTON'S HOUSE
KEY WEST CEMETERY

701 PASSOVER LANE
KEY WEST, FLORIDA

DATE: MAY 22, 2014

SCALE: AS NOTED

DRAWN BY: AA, AR, AG

CHECKED BY: MM

PROJECT NO: 1203

CITY SITE DEMOLITION PLAN

C2

Copyright © 2014 Michael Miller Architecture Inc. The design or any part of it and/ or the drawings on this sheet may not be used without written permission of Michael Miller, Architect.

ITB 15-013 DRAWINGS FOR CONSTRUCTION

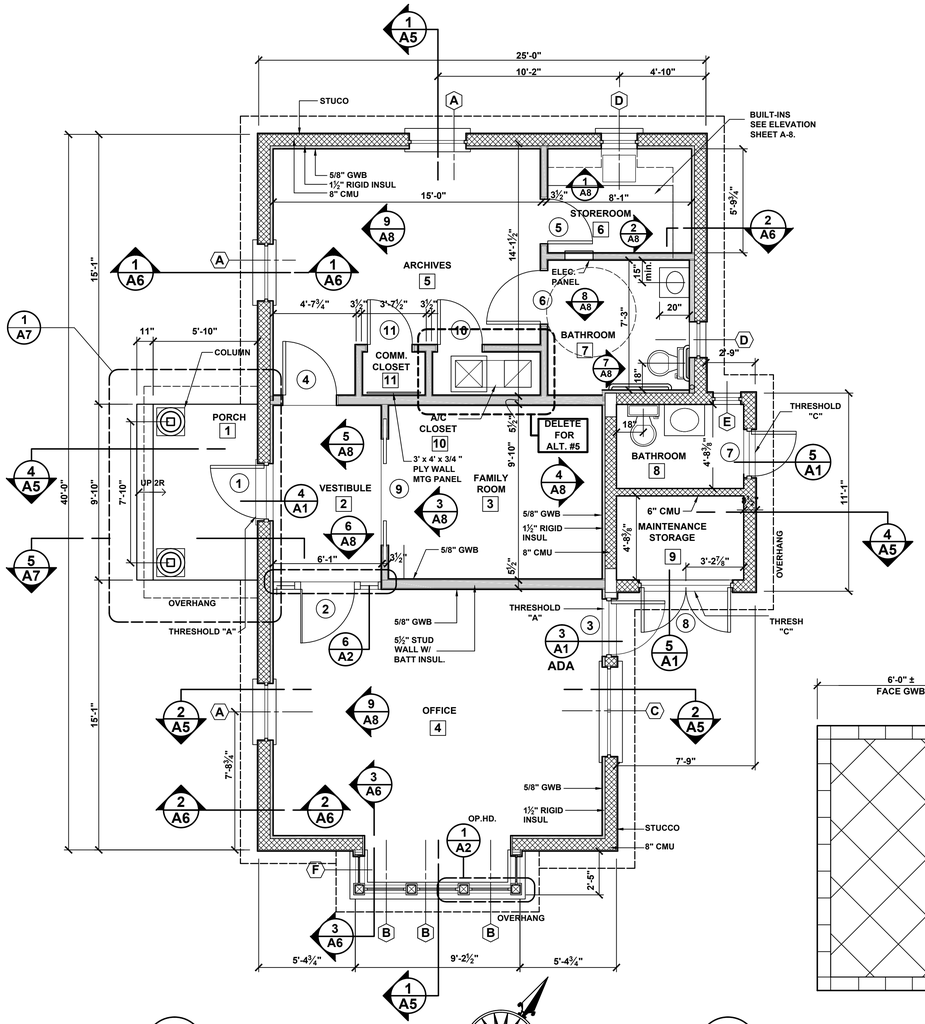

1 A1 FLOOR PLAN
SCALE: 1/4"=1'-0"

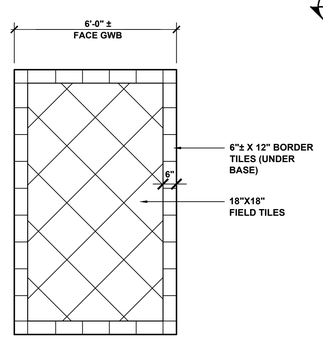

6 A1 VESTIBULE FLOOR TILE LAYOUT
SCALE: 3/8 "=1'-0"

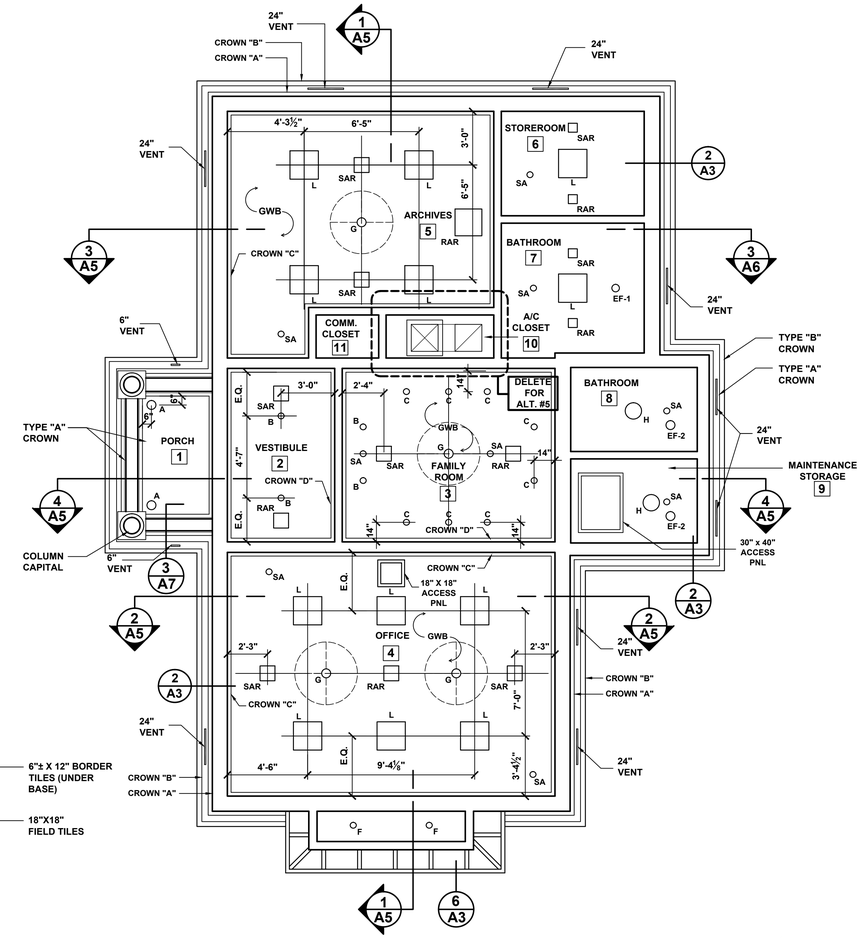

2 A1 REFLECTED CEILING PLAN
SCALE: 1/4"=1'-0"

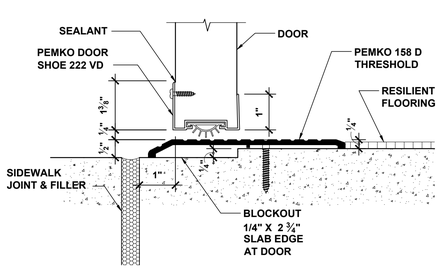

3 A1 TYPE A THRESHOLD
SCALE: 1/2 FS

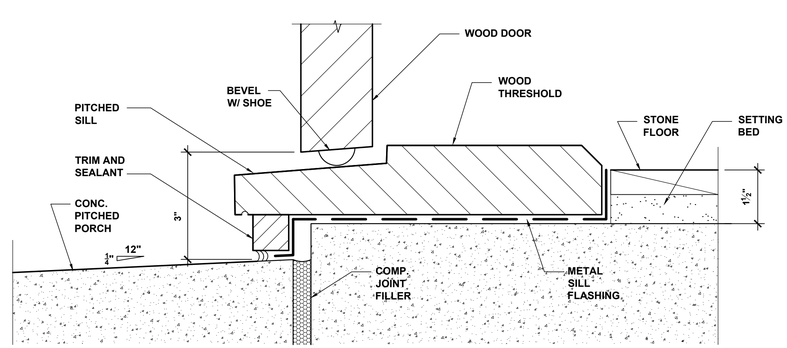

4 A1 TYPE B THRESHOLD
SCALE: 1/2 FS

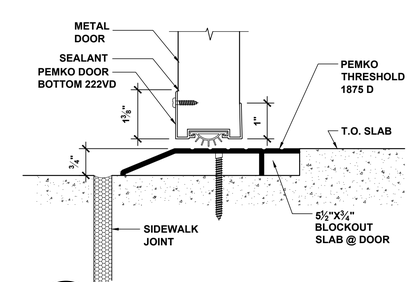

5 A1 TYPE C THRESHOLD
SCALE: 1/2 FS

SHEET NOTES:

1. Drawings and specifications are to be used together. Contractors and workers shall consult both when questions concerning the letter and/or intent of the design arise.

2. No changes to the drawings or to the design may be made without the written approval of the architect and Owner's representative.

3. All work shall be done in accordance with all applicable local, state, and national building and life safety codes. The contractor and all Subcontractors shall be familiar with these codes and shall build accordingly.

4. When a conflict or ambiguity exists between a Contractor's understanding of a code and the drawings and specifications, it is the Contractor's responsability to cease work on the item in question and notify the owner's representative in a manner that will allow a timely resolution. Work undertaken as instructed by the building inspector without the Architect's or Owner's representative's permission will be removed at the Contractor's expense.

5. When a conflict or ambiguity exists between the drawings or within the specifications, or if the contractor cannot find information he needs on the drawings or in the specifications it is the responsibility of the Contractor cease work on the item in question and notify the Owner's representative in a manner that will allow timely resolution.

6. In general, interior dimensions are taken from the face of stud or furring strip. Nominal dimensions are noted for standard lumber sizes but actual sizes are given where lumber is to be milled to a non-standard dimension. Exterior dimension lines are taken from face of concrete (e.g. not from the face of the stucco finish).

7. Drawings shall not be scaled. Where errors or inconsistencies exist regarding dimensions on the drawings, the Contractor shall notify the Owner's representative for a resolution before proceeding.

8. "V.I.F." means "Verify in Field". It is the Contractor's responsibility to measure or otherwise confirm a site condition that cannot be accurately determined before construction begins, and to notify the Owner's representative if it differs from what is on the drawings before proceeding with the affected work.

9. The Drawings, Specifications, and other documents prepared by the Architect, belong to the city of Key West and are Copyright © 2014 by Michael Miller, Architects INC ARC10013216.

10. The site and floor plans are laid out according to the survey provided by the Owner, The Contractor shall verify any inconsistencies between the drawings and field conditions before proceeding with the affected work.

CONFORMS TO FLORIDA BUILDING CODE 2010
ASCE 7-10: 180 MPH WINDSPEEC, CAT. II,
EXPOSURE C

MICHAEL MILLER ARCHITECTS

517 DUVAL STREET
KEY WEST, FLORIDA
(305) 294 - 7687

CITY SEXTON'S HOUSE
KEY WEST CEMETERY

701 PASSOVER LANE
KEY WEST, FLORIDA

DATE: MAY 22, 2014

SCALE: AS NOTED

DRAWN BY: AA, AR, AG

CHECKED BY: MM

PROJECT NO: 1203

FIRST FLOOR AND REFLECTED CEILING PLAN

A1

Copyright © 2014 Michael Miller Architecture Inc. The design or any part of it and/ or the drawings on this sheet may not be used without written permission of Michael Miller, Architect.

ITB 15-013 DRAWINGS FOR CONSTRUCTION

DOOR SCHEDULE

MK.	ROOM LOCATION	TYPE	SIZE	M.O. / R.O.	DOOR MAT.	DOOR FIN.	FRAME MAT.	FRAME FIN.	THRESHOLD TYPE	THRESHOLD MAT.	REMARKS
1	VESTIBULE	A	2'-6" x 6'-8" x 2 ¼"	3'-11" x 8'-7"	WD	PNT	WD	PNT	WD	TYPE B	SEE DETAILS FOR THRESHOLD AND TRANSOM
2	OFFICE	B	2'-6" x 6'-8" x 1 ¾"	3'-2 1/2" x 6'-9 ½"	WD/GL	PNT	WD	PNT	WD	——	CLEAR GLASS
3	OFFICE	D	2'-6" x 6'-8" x 1 ¾"	3'-2 ½" x 6'-10 ½"	HM	PNT	HM	PNT	HM	TYPE A	
4	ARCHIVES	C	2'-6" x 6'-8" x 1 ¾"	3'-2 1/2" x 6'-9 ½"	WD/GL	PNT	WD	PNT	WD	——	SEMI-OPAQUE GLASS
5	STOREROOM	C	2'-6" x 6'-8" x 1 ¾"	2'-8 1/2" x 6'-9 ½"	WD	PNT	WD	PNT	WD	——	CLEAR GLASS
6	BATHROOM	D	2'-6" x 6'-8" x 1 ⅜"	3'-2 1/2" x 6'-9 ½"	WD	PNT	WD	PNT	WD	——	
7	BATHROOM	E	2'-6" x 6'-8" x 1 ¾"	2'-10 ½" x 6'-10 ½"	HM	PNT	WD	PNT	HM	——	
8	MAINTENANCE STORAGE	F	PR 2'-6" x 6'-8" x 1 ¾"	5'-3" x 6'-9 ½"	HM	PNT	HM	PNT	HM	TYPE C	
9	FAMILY ROOM	G	DBL 2'-6" x 6'-8" x 1 ¾"	5'-2" x 6'-9 ½"	WD	PNT	WD	PNT	WD	——	SEMI-OPAQUE GLASS/CLOSER
10	AC CLOSET	D	2'-6" x 6'-8" x 1 ¾"	2'-8 1/2" x 6'-9 ½"	WD	PNT	WD	PNT	WD	——	
11	COMMUNICATION CLOSET	E	2'-6" x 6'-8" x 1 ⅜"	2'-8 1/2" x 6'-9 ½"	WD	PNT	WD	PNT	WD	——	

SEE SHEET A2 FOR CASING DETAILS

WINDOW SCHEDULE

NOTE : CONTRACTOR TO VERIFY M.O.'S WITH WDO MFR.

MK.	TYPE	R.O/M.O. SIZE / WxH	MFR. / NO.	MAT.	FIN.	GLASS	HEADER MO/RO HEIGHT	INTERIOR TRIM	EXTERIOR TRIM	REMARKS
A	CASEMENT	2'-9" x 4'- 4 ½"	PGT	ALUM	PNT	IMPACT	7'-2"	NONE	NONE	SEE DETAILS FOR SILL & STOOL AND SEE ELEVATIONS FOR GRILLS
B	CASEMENT	2'-5 ½" x 3'-9"	PGT	"	"	"	6'-8"	"	"	"
C	HOR. ROLLER	5'-0 ½" x 4'-0 ½"	PGT	"	"	"	6'-10"	"	"	"
D	CASEMENT	1'-8 ½" x 2'-6 ½"	PGT	"	"	"	6'-10"	"	"	"
E	CASEMENT	1'-7 ½" x 2'-8"	PGT	"	"	"	6'-10"	"	"	"
F	CASEMENT	1'-8 ½" x 3'-9"	PGT	"	"	"	6'-8"	"	"	"

ROOM FINISH SCHEDULE

NO.	ROOM NAME	FLOOR MAT.	FLOOR FIN.	CEILING MAT.	CEILING FIN.	CEILING HT.	WEST WALL MAT.	WEST WALL FIN.	NORTH WALL MAT.	NORTH WALL FIN.	EAST WALL MAT.	EAST WALL FIN.	SOUTH WALL MAT.	SOUTH WALL FIN.	BASE MAT.	BASE FIN.	REMARKS
1	PORCH	CONC	TRW	WD	PNT	10'-1" NOM	STUCCO	FLT	——	——	——	——	——	——	——	——	COLOR ADDITIVE IN CONC. FLR.
2	VESTIBULE	MARB	HN	GWB	PNT	10'- 1" NOM	GWB	PNT	GWB	PNT	GWB	PNT	GWB	PNT	WD	PNT	
3	FAMILY ROOM	VT	NAT	GWB	PNT	10'-1" NOM	GWB	PNT	GWB	PNT	GWB	PNT	GWB	PNT	WD	PNT	DROP CLG.
4	OFFICE	VT	ACRY	GWB	PNT	10'-1" NOM	GWB	PNT	GWB	PNT	GWB	PNT	GWB	PNT	WD	PNT	DROP CLG.
5	ARCHIVES	VT	ACRY	GWB	PNT	10'-1" NOM	GWB	PNT	GWB	PNT	GWB	PNT	GWB	PNT	WD	PNT	
6	STOREROOM	VT	ACRY	GWB	PNT	10'-1" NOM	GWB	PNT	GWB	PNT	GWB	PNT	GWB	PNT	WD	PNT	DROP CLG.
7	BATHROOM	VT	ACRY	GWB	PNT	8'-0" NOM	CMU	PNT	CMU	PNT	CMU	PNT	CMU	PNT	WD	PNT	DROP CLG.
8	BATHROOM	CONC	TRL	GWB	PNT	7'-0" NOM	CMU	PNT	CMU	PNT	CMU	PNT	CMU	PNT	NONE	——	DROP CLG. IF ALTERNATE IS ACCEPTED
9	MAINTENANCE STORAGE	CONC	TRL	GWB	PNT	7'-0" NOM	CMU	PNT	CMU	PNT	CMU	PNT	CMU	PNT	NONE	——	DROP CLG. IF ALTERNATE IS ACCEPTED
10	AC CLOSET	CONC	TRL	GWB	PNT	10'-1" NOM	GWB	PNT	GWB	PNT	GWB	PNT	GWB	PNT	NONE	——	
11	COMMUNICATION CLOSET	VT	NAT	GWB	PNT	10'-1" NOM	GWB	PNT	GWB	PNT	GWB	PNT	GWB	WD	PNT		

DOOR TYPE

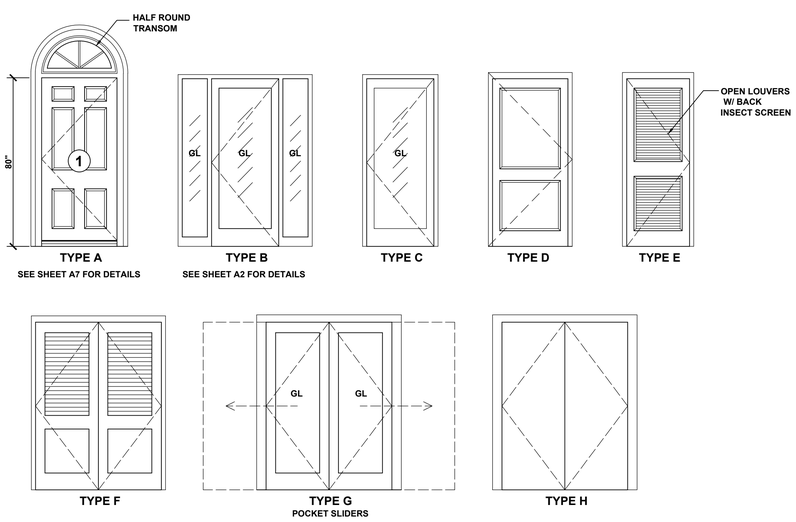

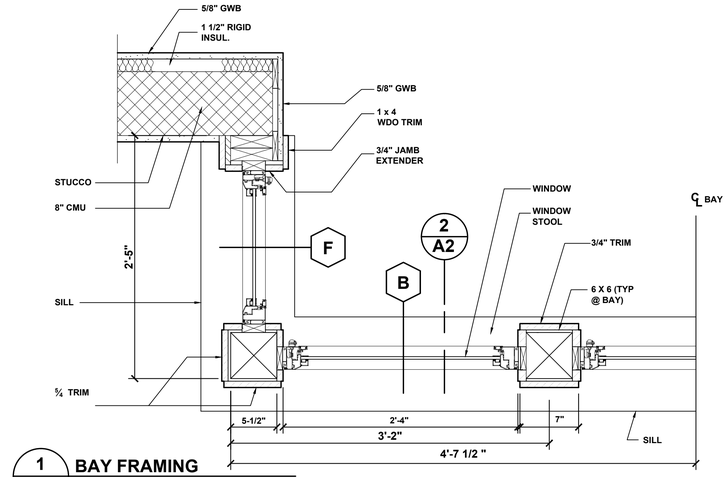

1 A2 **BAY FRAMING**
SCALE: 1½"=1'-0"

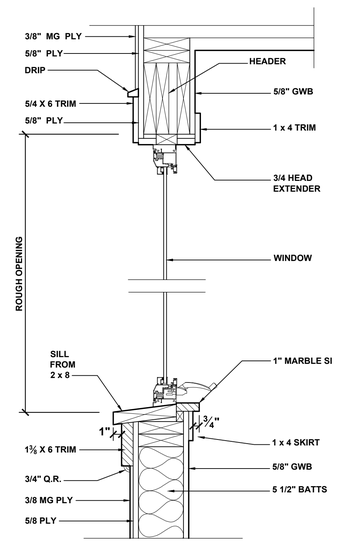

2 A2 **BAY WINDOW SECTION**
SCALE: 1½"=1'-0"

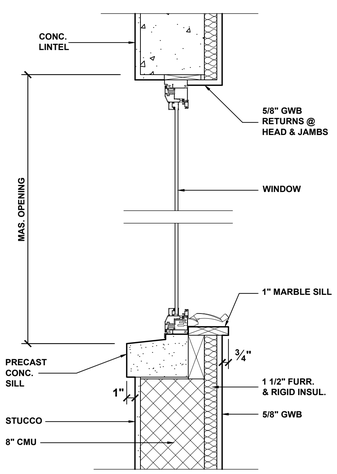

3 A2 **TYPICAL WINDOW SECTION**
SCALE: 1½"=1'-0"

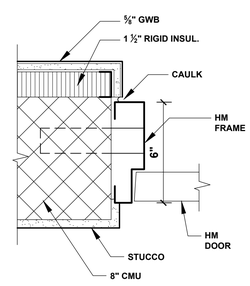

4 A2 **EXTERIOR HM DOOR**
SCALE: 3"=1'-0"

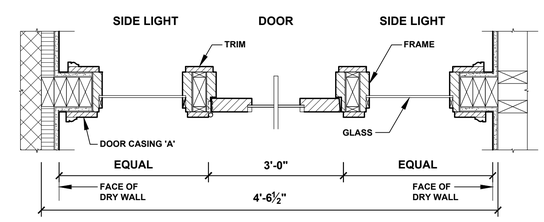

5 A2 **OFFICE DOOR AND SIDELIGHTS**
SCALE: 1½"=1'-0"

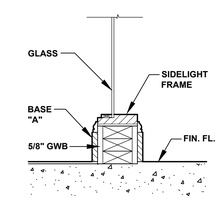

6 A2 **SIDELIGHT BASE**
SCALE: 1½"=1'-0"

SHEET NOTES:

1. Drawings and specifications are to be used together. Contractors and workers shall consult both when questions concerning the letter and/or intent of the design arise.

2. No changes to the drawings or to the design may be made without the written approval of the architect and Owner's representative.

3. All work shall be done in accordance with all applicable local, state, and national building and life safety codes. The contractor and all Subcontractors shall be familiar with these codes and shall build accordingly.

4. When a conflict or ambiguity exists between a Contractor's understanding of a code and the drawings and specifications, it is the Contractor's responsability to cease work on the item in question and notify the owner's representative in a manner that will allow a timely resolution. Work undertaken as instructed by the building inspector without the Architect's or Owner's representative's permission will be removed at the Contractor's expense.

5. When a conflict or ambiguity exists between the drawings or within the specifications, or if the contractor cannot find information he needs on the drawings or in the specifications it is the responsibility of the Contractor cease work on the item in question and notify the Owner's representative in a manner that will allow timely resolution.

6. In general, interior dimensions are taken from the face of stud or furring strip. Nominal dimensions are noted for standard lumber sizes but actual sizes are given where lumber is to be milled to a non-standard dimension. Exterior dimension lines are taken from face of concrete (e.g. not from the face of the stucco finish).

7. Drawings shall not be scaled. Where errors or inconsistencies exist regarding dimensions on the drawings, the Contractor shall notify the Owner's representative for a resolution before proceeding.

8. "V.I.F." means "Verify in Field". It is the Contractor's responsibility to measure or otherwise confirm a site condition that cannot be accurately determined before construction begins, and to notify the Owner's representative if it differs from what is on the drawings before proceeding with the affected work.

9. The Drawings, Specifications, and other documents prepared by the Architect, belong to the city of Key West and are Copyright © 2014 by Michael Miller, Architects INC ARC10013216.

10. The site and floor plans are laid out according to the survey provided by the Owner, The Contractor shall verify any inconsistencies between the drawings and field conditions before proceeding with the affected work.

CONFORMS TO FLORIDA BUILDING CODE 2010
ASCE 7-10: CATEGORY C WIND LOADING

MICHAEL MILLER ARCHITECTS

517 DUVAL STREET
KEY WEST, FLORIDA
(305) 294 - 7687

CITY SEXTON'S HOUSE
KEY WEST CEMETERY

701 PASSOVER LANE
KEY WEST, FLORIDA

DATE: MAY 22, 2014
SCALE: AS NOTED
DRAWN BY: AA, AR, AG
CHECKED BY: MM
PROJECT NO: 1203

SCHEDULES AND DETAILS

A2

Copyright © 2014 Michael Miller Architecture Inc. The design or any part of it and/ or the drawings on this sheet may not be used without written permission of Michael Miller, Architect.

ITB 15-013 DRAWINGS FOR CONSTRUCTION

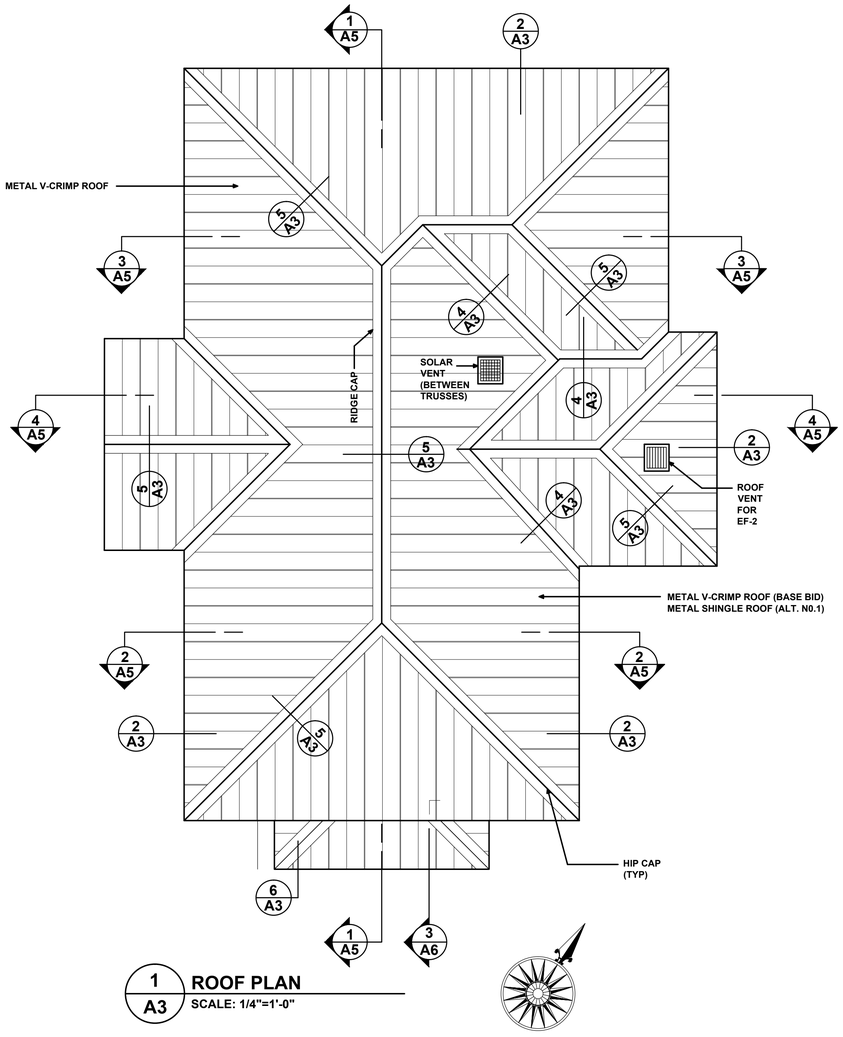

1 / A3 ROOF PLAN
SCALE: 1/4"=1'-0"

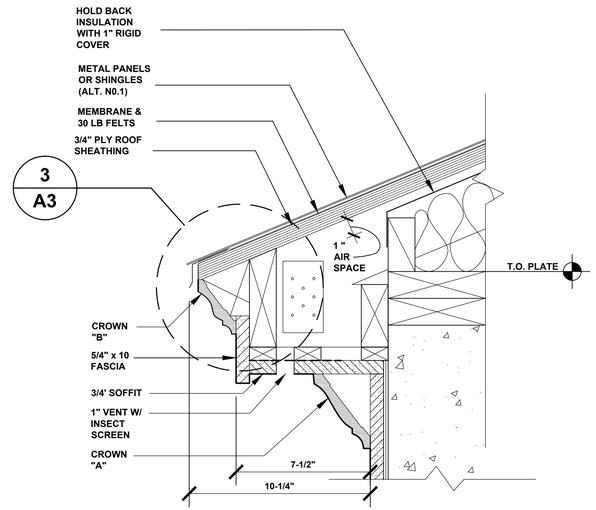

2 / A3 EAVE SECTION DETAIL
SCALE: 3"=1'-0"
NOTE: SEE RCP FOR LOCATION OF VENTS

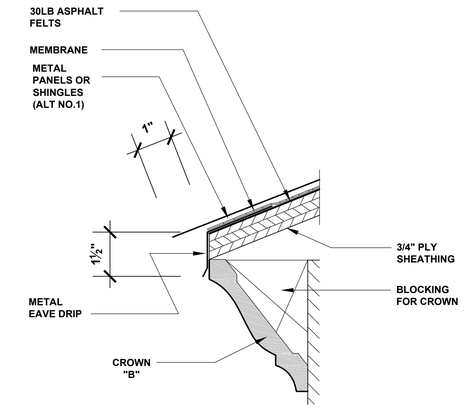

3 / A3 EAVE DRIP
SCALE: 1/2 FULL SIZE

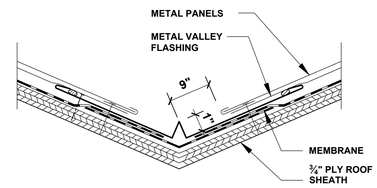

4 / A3 VALLEY
SCALE: 3"=1'-0"

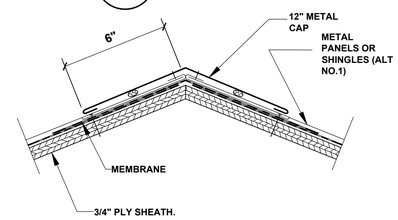

5 / A3 RIDGE AND HIP
SCALE: 3"=1'-0"

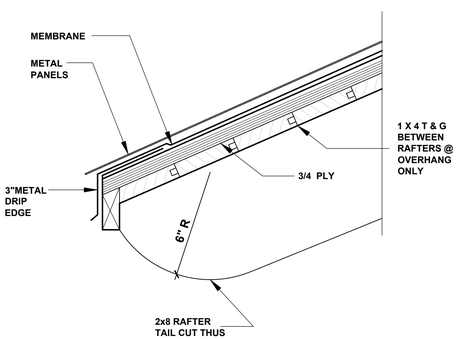

6 / A3 EAVE AT BAY
SCALE: 3"=1'-0"

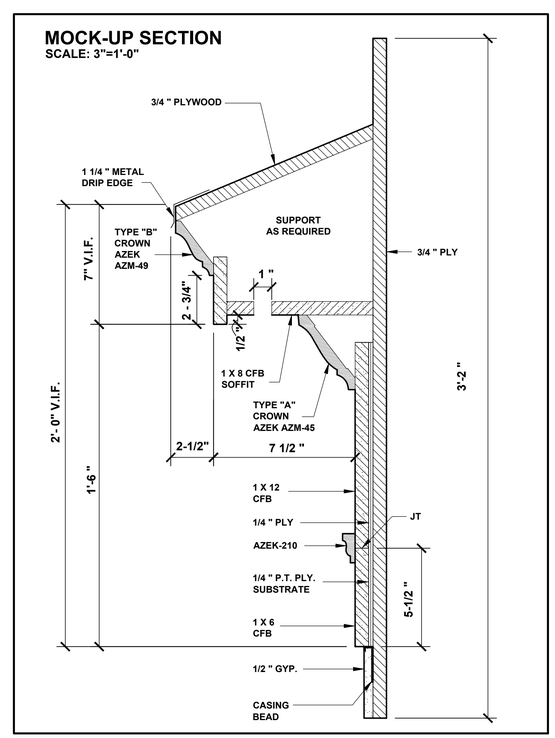

SHEET NOTES:

1. Drawings and specifications are to be used together. Contractors and workers shall consult both when questions concerning the letter and/or intent of the design arise.

2. No changes to the drawings or to the design may be made without the written approval of the architect and Owner's representative.

3. All work shall be done in accordance with all applicable local, state, and national building and life safety codes. The contractor and all Subcontractors shall be familiar with these codes and shall build accordingly.

4. When a conflict or ambiguity exists between a Contractor's understanding of a code and the drawings and specifications, it is the Contractor's responsability to cease work on the item in question and notify the owner's representative in a manner that will allow a timely resolution. Work undertaken as instructed by the building inspector without the Architect's or Owner's representative's permission will be removed at the Contractor's expense.

5. When a conflict or ambiguity exists between the drawings or within the specifications, or if the contractor cannot find information he needs on the drawings or in the specifications it is the responsibility of the Contractor cease work on the item in question and notify the Owner's representative in a manner that will allow timely resolution.

6. In general, interior dimensions are taken from the face of stud or furring strip. Nominal dimensions are noted for standard lumber sizes but actual sizes are given where lumber is to be milled to a non-standard dimension. Exterior dimension lines are taken from face of concrete (e.g. not from the face of the stucco finish).

7. Drawings shall not be scaled. Where errors or inconsistencies exist regarding dimensions on the drawings, the Contractor shall notify the Owner's representative for a resolution before proceeding.

8. "V.I.F." means "Verify in Field". It is the Contractor's responsibility to measure or otherwise confirm a site condition that cannot be accurately determined before construction begins, and to notify the Owner's representative if it differs from what is on the drawings before proceeding with the affected work.

9. The Drawings, Specifications, and other documents prepared by the Architect, belong to the city of Key West and are Copyright © 2014 by Michael Miller, Architects INC ARC10013216.

10. The site and floor plans are laid out according to the survey provided by the Owner, The Contractor shall verify any inconsistencies between the drawings and field conditions before proceeding with the affected work.

CONFORMS TO FLORIDA BUILDING CODE 2010
ASCE 7-10: CATEGORY C WIND LOADING

MICHAEL MILLER ARCHITECTS

517 DUVAL STREET
KEY WEST, FLORIDA
(305) 294 - 7687

CITY SEXTON'S HOUSE
KEY WEST CEMETERY

701 PASSOVER LANE
KEY WEST, FLORIDA

DATE: MAY 22, 2014
SCALE: AS NOTED
DRAWN BY: AA, AR, AG
CHECKED BY: MM
PROJECT NO: 1203

ROOF PLANS AND DETAILS

A3

Copyright © 2014 Michael Miller Architecture Inc. The design or any part of it and/ or the drawings on this sheet may not be used without written permission of Michael Miller, Architect.

ITB 15-013 DRAWINGS FOR CONSTRUCTION

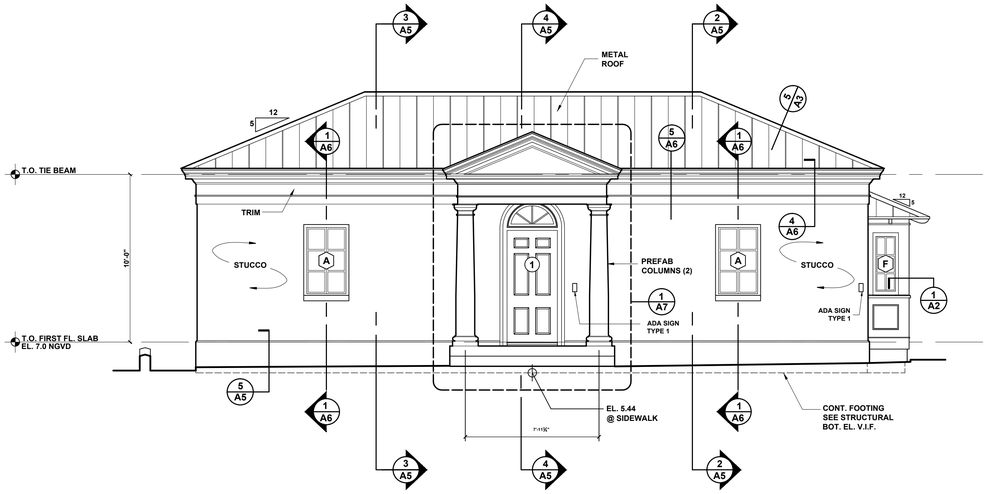

1 / A4 WEST EXTERIOR ELEVATION

SCALE: 1/4"=1'-0"
NOTE: WALL @ SIDEWALK NOT SHOWN

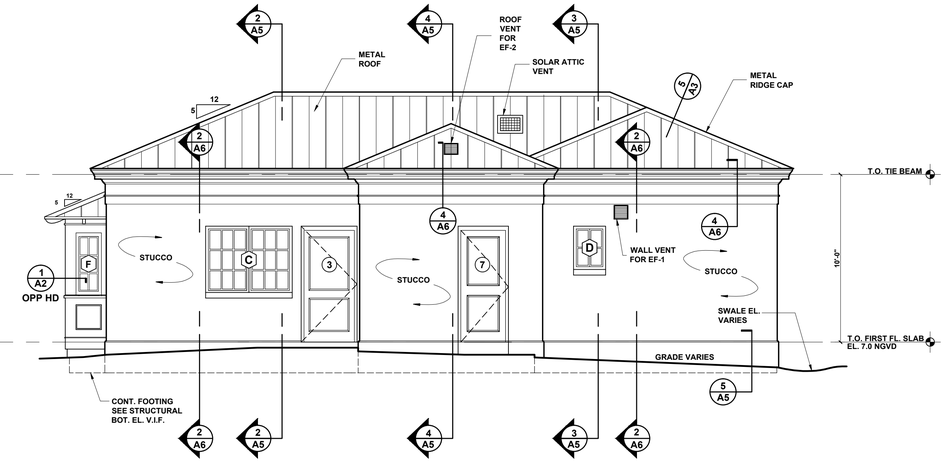

2 / A4 EAST EXTERIOR ELEVATION

SCALE: 1/4"=1'-0"

EXTERIOR MOLDINGS

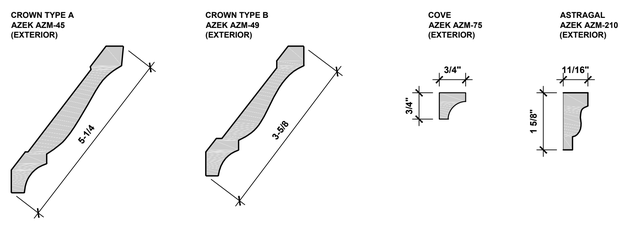

INTERIOR MOLDINGS

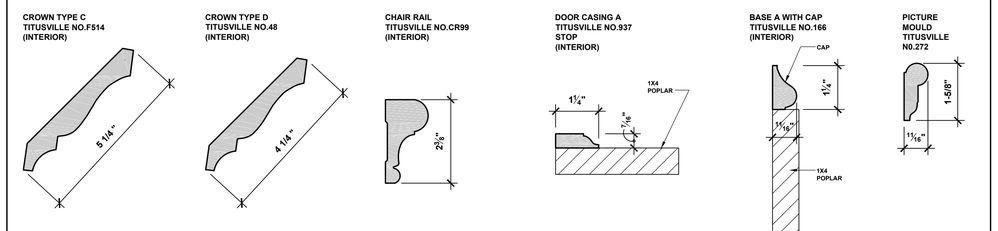

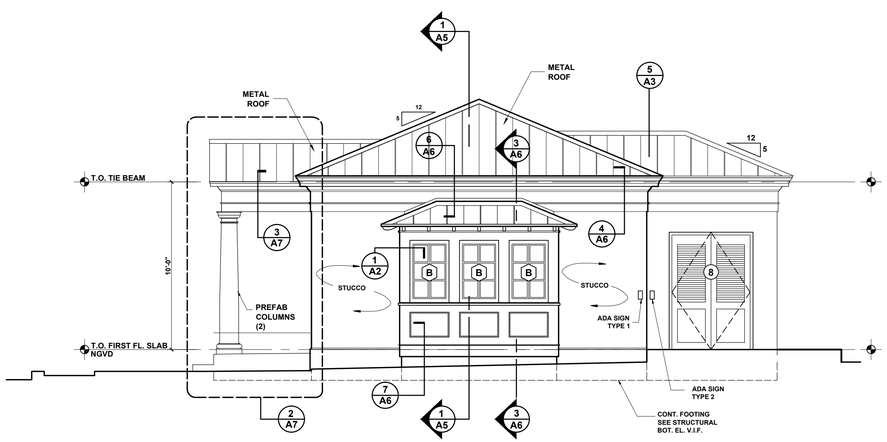

3 / A4 SOUTH EXTERIOR ELEVATION

SCALE: 1/4"=1'-0"

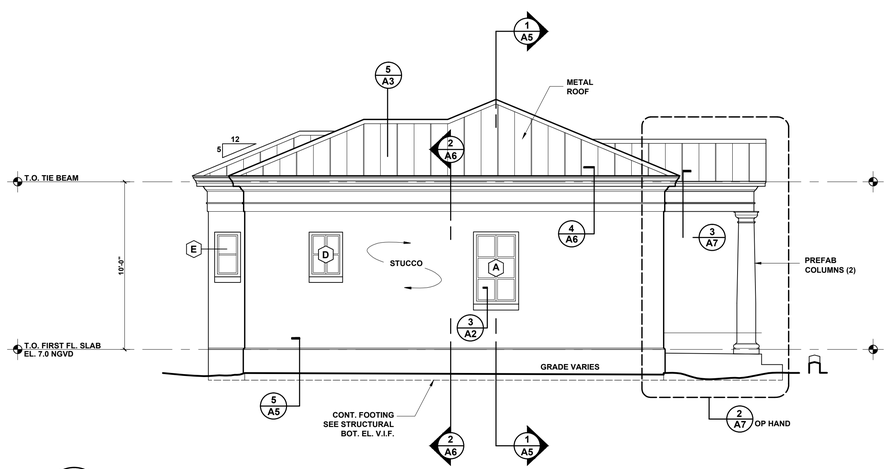

4 / A4 NORTH EXTERIOR ELEVATION

SCALE: 1/4"=1'-0"

SHEET NOTES:

1. Drawings and specifications are to be used together. Contractors and workers shall consult both when questions concerning the letter and/or intent of the design arise.

2. No changes to the drawings or to the design may be made without the written approval of the architect and Owner's representative.

3. All work shall be done in accordance with all applicable local, state, and national building and life safety codes. The contractor and all Subcontractors shall be familiar with these codes and shall build accordingly.

4. When a conflict or ambiguity exists between a Contractor's understanding of a code and the drawings and specifications, it is the Contractor's responsability to cease work on the item in question and notify the owner's representative in a manner that will allow a timely resolution. Work undertaken as instructed by the building inspector without the Architect's or Owner's representative's permission will be removed at the Contractor's expense.

5. When a conflict or ambiguity exists between the drawings or within the specifications, or if the contractor cannot find information he needs on the drawings or in the specifications it is the responsibility of the Contractor cease work on the item in question and notify the Owner's representative in a manner that will allow timely resolution.

6. In general, interior dimensions are taken from the face of stud or furring strip. Nominal dimensions are noted for standard lumber sizes but actual sizes are given where lumber is to be milled to a non-standard dimension. Exterior dimension lines are taken from face of concrete (e.g. not from the face of the stucco finish).

7. Drawings shall not be scaled. Where errors or inconsistencies exist regarding dimensions on the drawings, the Contractor shall notify the Owner's representative for a resolution before proceeding.

8. "V.I.F." means "Verify in Field". It is the Contractor's responsibility to measure or otherwise confirm a site condition that cannot be accurately determined before construction begins, and to notify the Owner's representative if it differs from what is on the drawings before proceeding with the affected work.

9. The Drawings, Specifications, and other documents prepared by the Architect, belong to the city of Key West and are Copyright © 2014 by Michael Miller, Architects INC ARC10013216.

10. The site and floor plans are laid out according to the survey provided by the Owner, The Contractor shall verify any inconsistencies between the drawings and field conditions before proceeding with the affected work.

CONFORMS TO FLORIDA BUILDING CODE 2010
ASCE 7-10: CATEGORY C WIND LOADING

MICHAEL MILLER ARCHITECTS
517 DUVAL STREET
KEY WEST, FLORIDA
(305) 294 - 7687

CITY SEXTON'S HOUSE
KEY WEST CEMETERY

701 PASSOVER LANE
KEY WEST, FLORIDA

DATE: MAY 22, 2014
SCALE: AS NOTED
DRAWN BY: AA, AR, AG
CHECKED BY: MM
PROJECT NO: 1203

EXTERIOR ELEVATIONS

A4

Copyright © 2014 Michael Miller Architecture Inc. The design or any part of it and/ or the drawings on this sheet may not be used without written permission of Michael Miller, Architect.

ITB 15-013 DRAWINGS FOR CONSTRUCTION

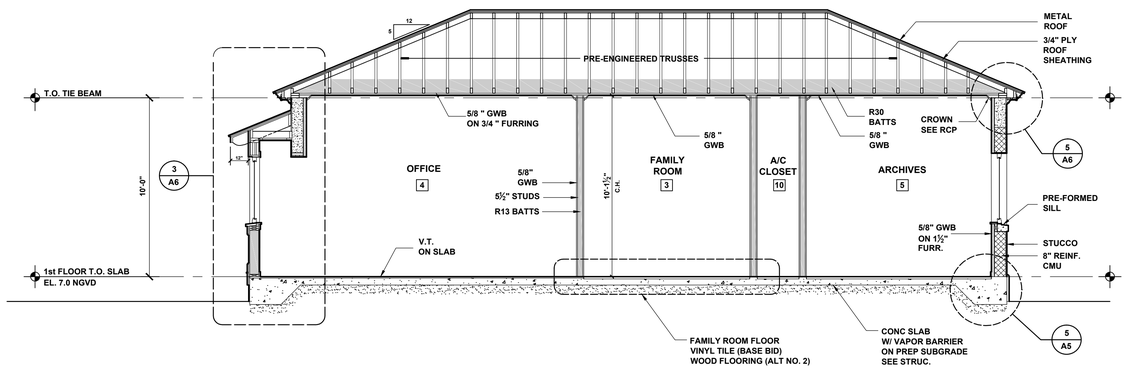

1 / A5 BUILDING SECTION

SCALE: 1/4"=1'-0"

NOTE: TRUSS PLACEMENT IS APPROXIMATE-
SEE PRE-ENGINEERED TRUSS MFR'S SEALED DWGS

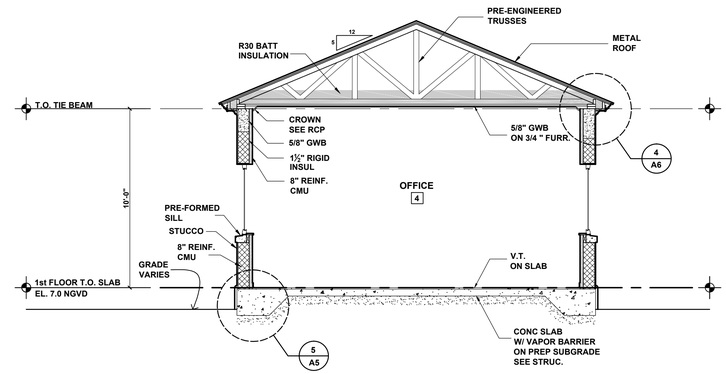

2 / A5 BUILDING SECTION

SCALE: 1/4"=1'-0"

NOTE: TRUSS PLACEMENT IS APPROXIMATE-
SEE PRE-ENGINEERED TRUSS MFR'S SEALED DWGS

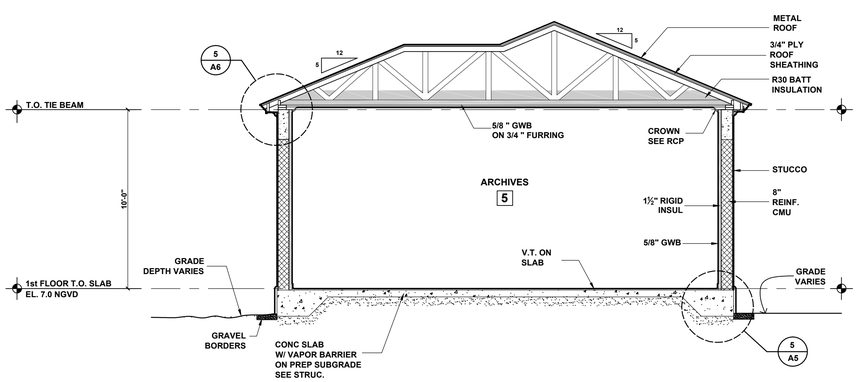

3 / A5 BUILDING SECTION

SCALE: 1/4"=1'-0"

NOTE: TRUSS PLACEMENT IS APPROXIMATE-
SEE PRE-ENGINEERED TRUSS MFR'S SEALED DWGS

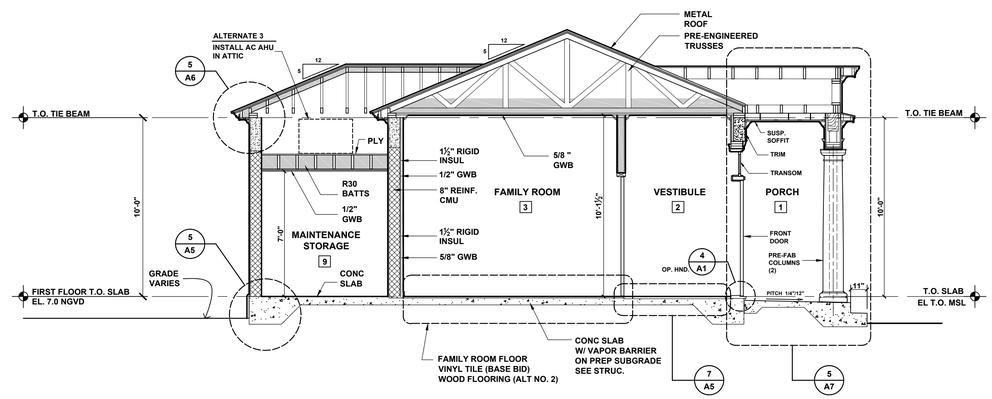

4 / A5 BUILDING SECTION

SCALE: 1/4"=1'-0"

NOTE: TRUSS PLACEMENT IS SCHEMATIC
SEE PRE-ENGINEERED TRUSS MFR'S SEALED DWGS
FOR COMPLETE LAYOUT DWGS

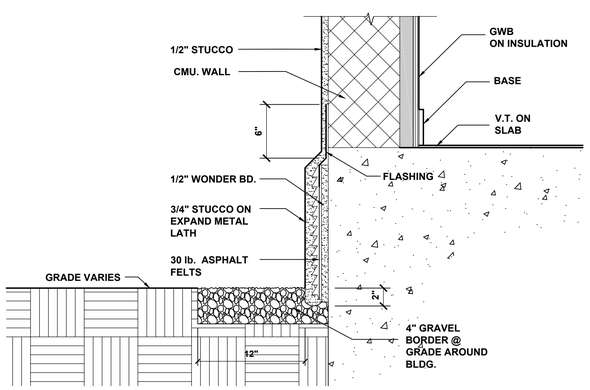

5 / A5 STUCCO BUILDING BASE

SCALE: 1 1/2"=1'-0"

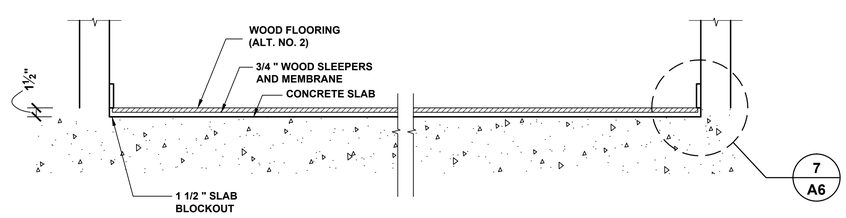

6 / A5 SLAB BLOCKOUT ALT NO.2 WOOD FLOOR IN FAMILY ROOM

SCALE: 1"=1'-0"

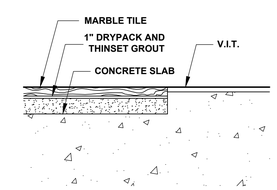

7 / A5 MARBLE FLOOR

SCALE: 3"=1'-0"

SHEET NOTES:

1. Drawings and specifications are to be used together. Contractors and workers shall consult both when questions concerning the letter and/or intent of the design arise.

2. No changes to the drawings or to the design may be made without the written approval of the architect and Owner's representative.

3. All work shall be done in accordance with all applicable local, state, and national building and life safety codes. The contractor and all Subcontractors shall be familiar with these codes and shall build accordingly.

4. When a conflict or ambiguity exists between a Contractor's understanding of a code and the drawings and specifications, it is the Contractor's responsability to cease work on the item in question and notify the owner's representative in a manner that will allow a timely resolution. Work undertaken as instructed by the building inspector without the Architect's or Owner's representative's permission will be removed at the Contractor's expense.

5. When a conflict or ambiguity exists between the drawings or within the specifications, or if the contractor cannot find information he needs on the drawings or in the specifications it is the responsibility of the Contractor cease work on the item in question and notify the Owner's representative in a manner that will allow timely resolution.

6. In general, interior dimensions are taken from the face of stud or furring strip. Nominal dimensions are noted for standard lumber sizes but actual sizes are given where lumber is to be milled to a non-standard dimension. Exterior dimension lines are taken from face of concrete (e.g. not from the face of the stucco finish).

7. Drawings shall not be scaled. Where errors or inconsistencies exist regarding dimensions on the drawings, the Contractor shall notify the Owner's representative for a resolution before proceeding.

8. "V.I.F." means "Verify in Field". It is the Contractor's responsibility to measure or otherwise confirm a site condition that cannot be accurately determined before construction begins, and to notify the Owner's representative if it differs from what is on the drawings before proceeding with the affected work.

9. The Drawings, Specifications, and other documents prepared by the Architect, belong to the city of Key West and are Copyright © 2014 by Michael Miller, Architects INC ARC10013216.

10. The site and floor plans are laid out according to the survey provided by the Owner, The Contractor shall verify any inconsistencies between the drawings and field conditions before proceeding with the affected work.

CONFORMS TO FLORIDA BUILDING CODE 2010
ASCE 7-10: CATEGORY C WIND LOADING

MICHAEL MILLER ARCHITECTS

517 DUVAL STREET
KEY WEST, FLORIDA
(305) 294 - 7687

CITY SEXTON'S HOUSE
KEY WEST CEMETERY

701 PASSOVER LANE
KEY WEST, FLORIDA

DATE: MAY 22, 2014

SCALE: AS NOTED

DRAWN BY: AA, AR, AG

CHECKED BY: MM

PROJECT NO: 1203

BUILDING SECTIONS

A5

Copyright © 2014 Michael Miller Architecture Inc. The design or any part of it and/ or the drawings on this sheet may not be used without written permission of Michael Miller, Architect.

ITB 15-013 DRAWINGS FOR CONSTRUCTION

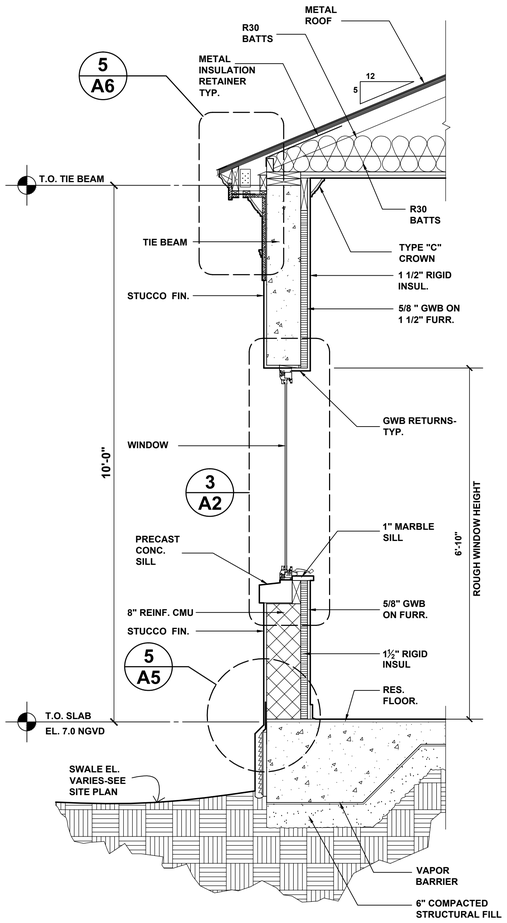

1 A6 WALL SECTION
SCALE: 3/4"=1'-0"

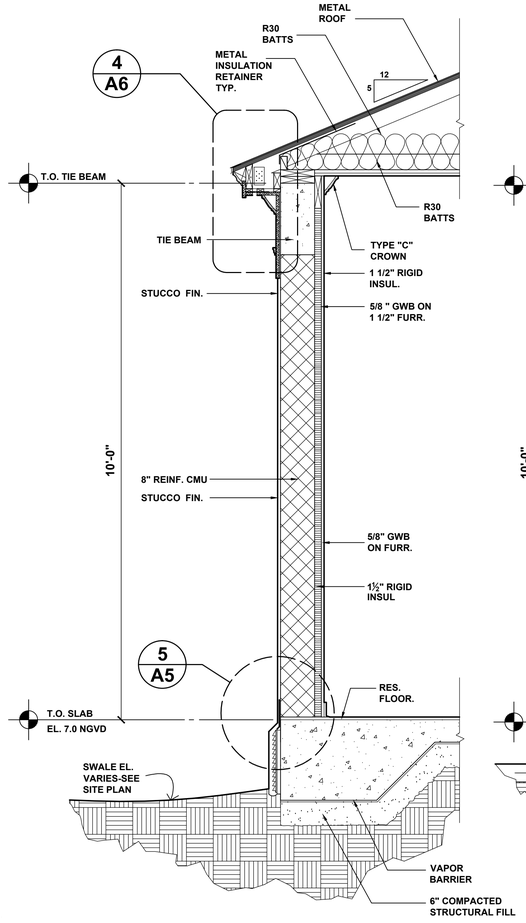

2 A6 WALL SECTION
SCALE: 3/4"=1'-0"

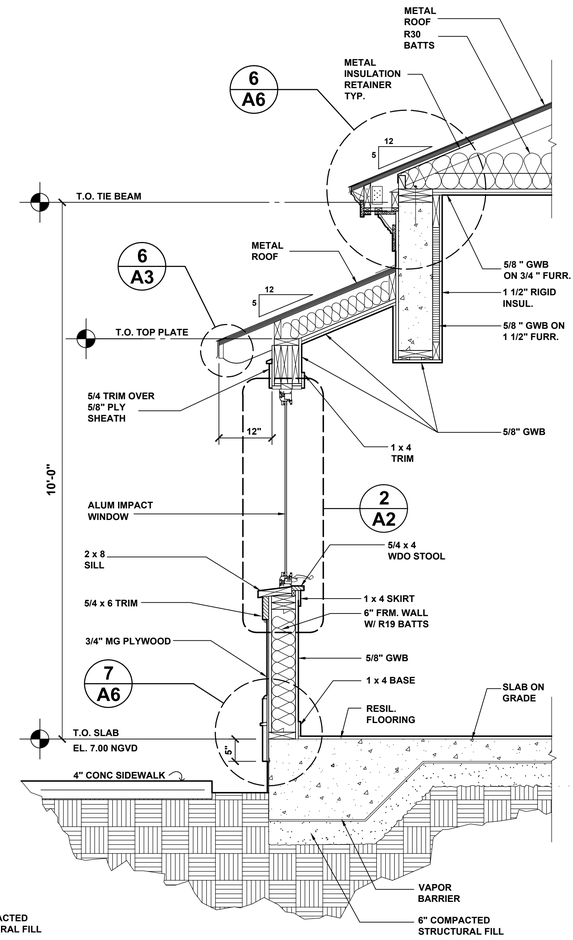

3 A6 WALL SECTION
SCALE: 3/4"=1'-0"

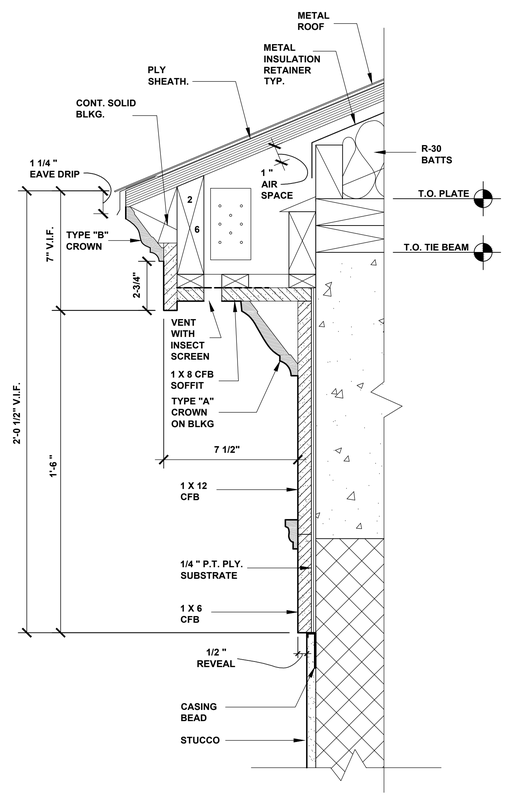

4 A6 ENTABLATURE DETAIL
SCALE: 3"=1'-0"

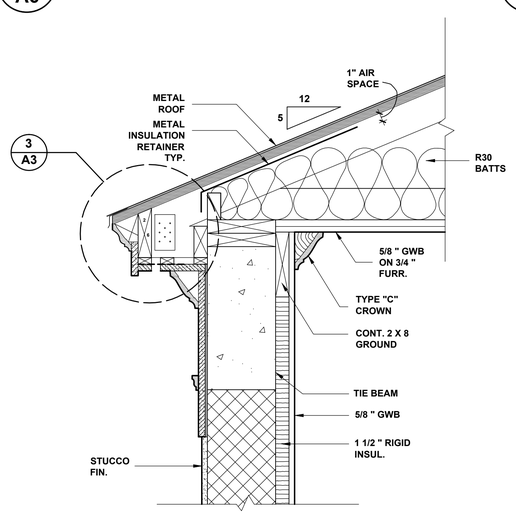

5 A6 EAVE
SCALE: 1 1/2"=1'-0"

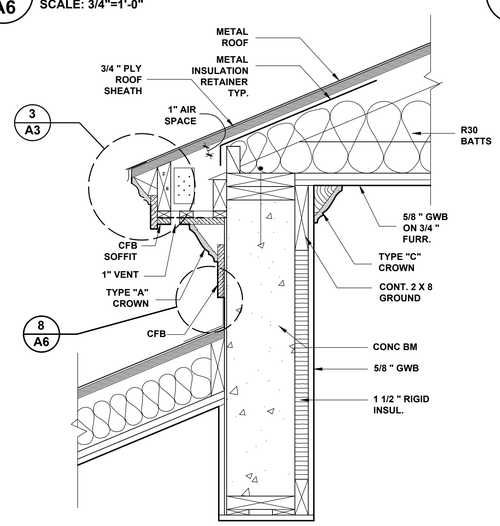

6 A6 EAVE @ BAY WINDOW ROOF
SCALE: 1 1/2"=1'-0"

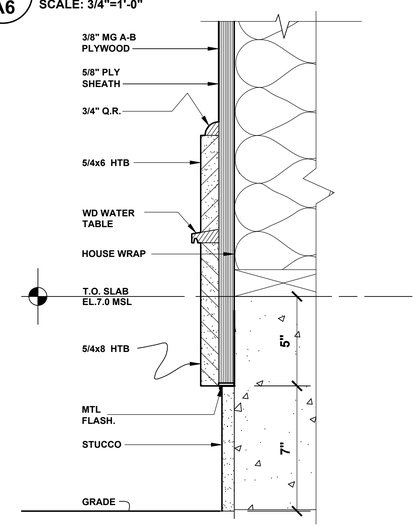

7 A6 WATER TABLE @ BAY WDO
SCALE: 3"=1'-0"

SHEET NOTES:

1. Drawings and specifications are to be used together. Contractors and workers shall consult both when questions concerning the letter and/or intent of the design arise.

2. No changes to the drawings or to the design may be made without the written approval of the architect and Owner's representative.

3. All work shall be done in accordance with all applicable local, state, and national building and life safety codes. The contractor and all Subcontractors shall be familiar with these codes and shall build accordingly.

4. When a conflict or ambiguity exists between a Contractor's understanding of a code and the drawings and specifications, it is the Contractor's responsability to cease work on the item in question and notify the owner's representative in a manner that will allow a timely resolution. Work undertaken as instructed by the building inspector without the Architect's or Owner's representative's permission will be removed at the Contractor's expense.

5. When a conflict or ambiguity exists between the drawings or within the specifications, or if the contractor cannot find information he needs on the drawings or in the specifications it is the responsibility of the Contractor cease work on the item in question and notify the Owner's representative in a manner that will allow timely resolution.

6. In general, interior dimensions are taken from the face of stud or furring strip. Nominal dimensions are noted for standard lumber sizes but actual sizes are given where lumber is to be milled to a non-standard dimension. Exterior dimension lines are taken from face of concrete (e.g. not from the face of the stucco finish).

7. Drawings shall not be scaled. Where errors or inconsistencies exist regarding dimensions on the drawings, the Contractor shall notify the Owner's representative for a resolution before proceeding.

8. "V.I.F." means "Verify in Field". It is the Contractor's responsibility to measure or otherwise confirm a site condition that cannot be accurately determined before construction begins, and to notify the Owner's representative if it differs from what is on the drawings before proceeding with the affected work.

9. The Drawings, Specifications, and other documents prepared by the Architect, belong to the city of Key West and are Copyright © 2014 by Michael Miller, Architects INC ARC10013216.

10. The site and floor plans are laid out according to the survey provided by the Owner, The Contractor shall verify any inconsistencies between the drawings and field conditions before proceeding with the affected work.

CONFORMS TO FLORIDA BUILDING CODE 2010
ASCE 7-10: CATEGORY C WIND LOADING

MICHAEL MILLER ARCHITECTS

517 DUVAL STREET
KEY WEST, FLORIDA
(305) 294 - 7687

CITY SEXTON'S HOUSE
KEY WEST CEMETERY

701 PASSOVER LANE
KEY WEST, FLORIDA

DATE: MAY 22, 2014
SCALE: AS NOTED
DRAWN BY: AA, AR, AG
CHECKED BY: MM
PROJECT NO: 1203

WALL SECTIONS AND DETAILS

A6

Copyright © 2014 Michael Miller Architecture Inc. The design or any part of it and/ or the drawings on this sheet may not be used without written permission of Michael Miller, Architect.

ITB 15-013 DRAWINGS FOR CONSTRUCTION

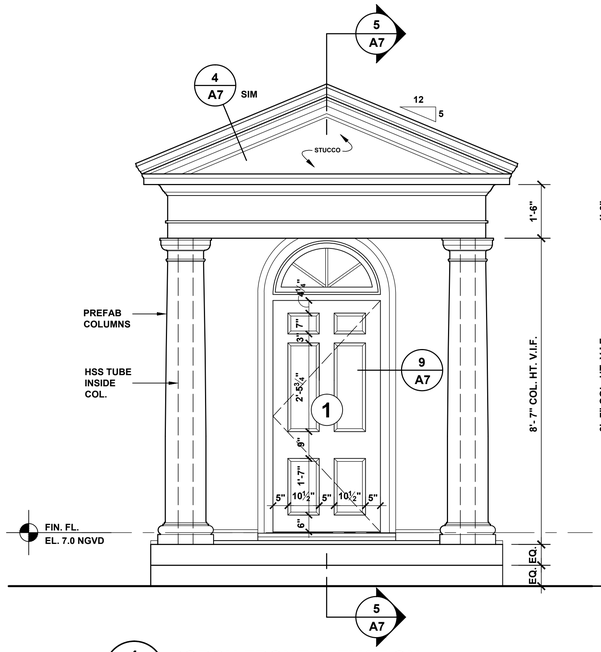

1 A7 **PORCH FRONT ELEVATION**
SCALE: 1/2 " = 1'-0"

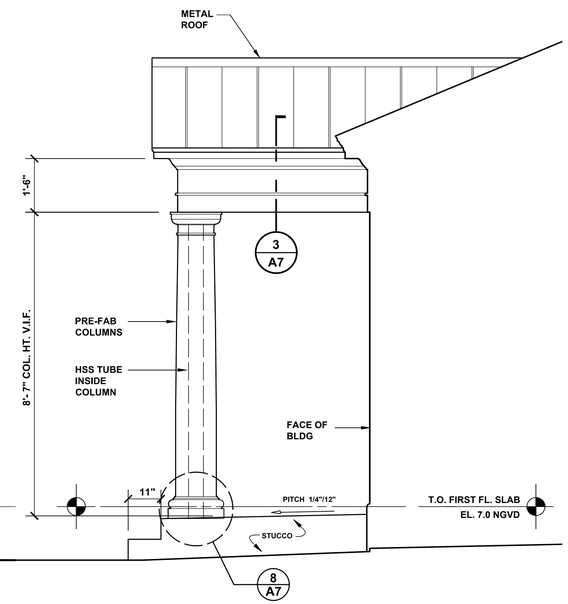

2 A7 **PORCH SIDE ELEVATION**
SCALE: 1/2 " = 1'-0"

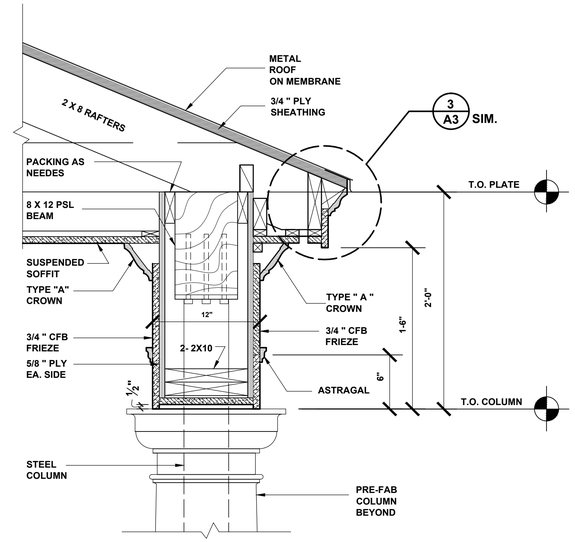

3 A7 **PORCH EAVE**
SCALE: 1 1/2" = 1'-0"

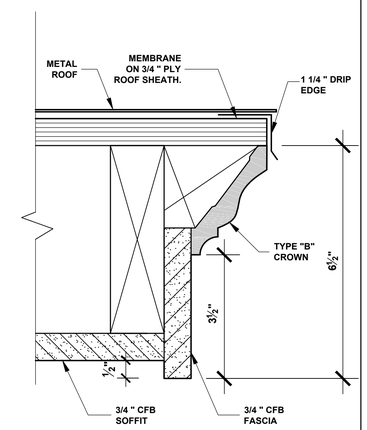

4 A7 **CORNICE**
SCALE: 1/2" FS

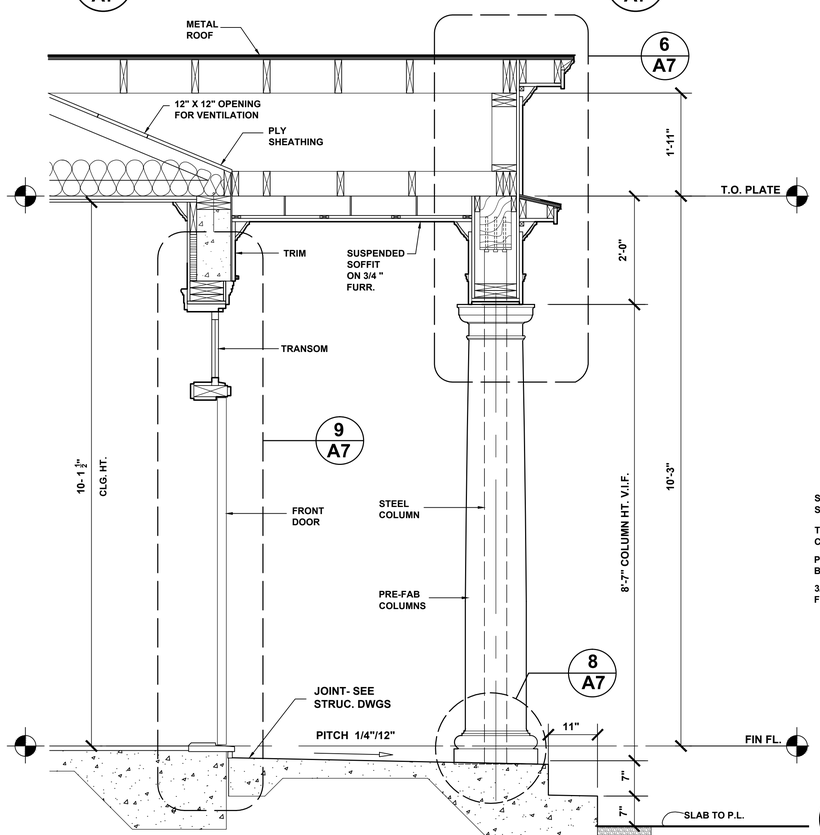

5 A7 **SECTION THRU PORCH**
SCALE: 3/4 " = 1'-0"

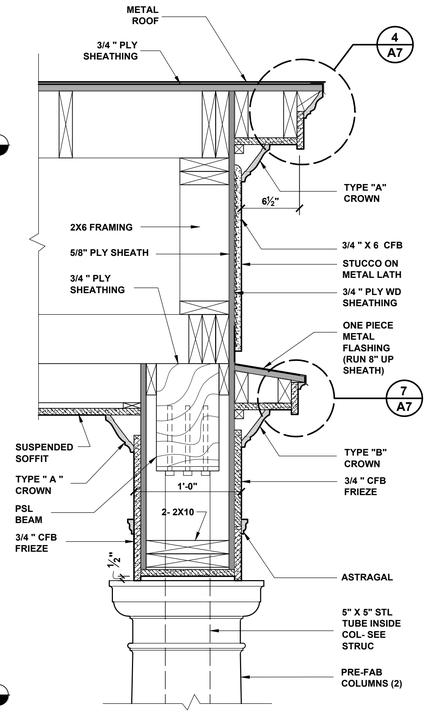

6 A7 **PORCH GABLE**
SCALE: 1 1/2" = 1'-0"

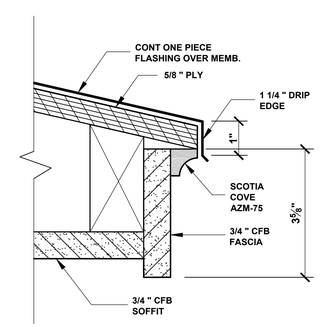

7 A7 **PEDIMENT CORNICE**
SCALE: 1/2" FS

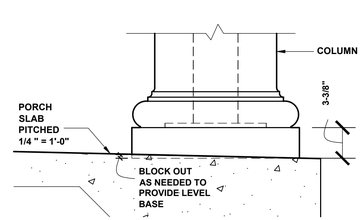

8 A7 **PORCH COL. BASE**
SCALE: 1 1/2"= 1'-0"

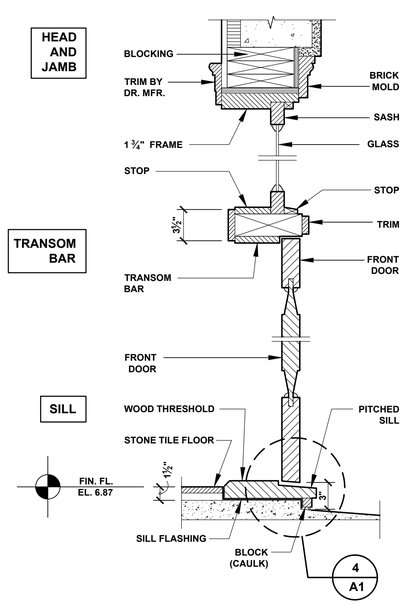

9 A7 **FRONT DOOR SECTION**
SCALE: 1 1/2"= 1'-0"

SHEET NOTES:

1. Drawings and specifications are to be used together. Contractors and workers shall consult both when questions concerning the letter and/or intent of the design arise.

2. No changes to the drawings or to the design may be made without the written approval of the architect and Owner's representative.

3. All work shall be done in accordance with all applicable local, state, and national building and life safety codes. The contractor and all Subcontractors shall be familiar with these codes and shall build accordingly.

4. When a conflict or ambiguity exists between a Contractor's understanding of a code and the drawings and specifications, it is the Contractor's responsability to cease work on the item in question and notify the owner's representative in a manner that will allow a timely resolution. Work undertaken as instructed by the building inspector without the Architect's or Owner's representative's permission will be removed at the Contractor's expense.

5. When a conflict or ambiguity exists between the drawings or within the specifications, or if the contractor cannot find information he needs on the drawings or in the specifications it is the responsibility of the Contractor cease work on the item in question and notify the Owner's representative in a manner that will allow timely resolution.

6. In general, interior dimensions are taken from the face of stud or furring strip. Nominal dimensions are noted for standard lumber sizes but actual sizes are given where lumber is to be milled to a non-standard dimension. Exterior dimension lines are taken from face of concrete (e.g. not from the face of the stucco finish).

7. Drawings shall not be scaled. Where errors or inconsistencies exist regarding dimensions on the drawings, the Contractor shall notify the Owner's representative for a resolution before proceeding.

8. "V.I.F." means "Verify in Field". It is the Contractor's responsibility to measure or otherwise confirm a site condition that cannot be accurately determined before construction begins, and to notify the Owner's representative if it differs from what is on the drawings before proceeding with the affected work.

9. The Drawings, Specifications, and other documents prepared by the Architect, belong to the city of Key West and are Copyright © 2014 by Michael Miller, Architects INC ARC10013216.

10. The site and floor plans are laid out according to the survey provided by the Owner, The Contractor shall verify any inconsistencies between the drawings and field conditions before proceeding with the affected work.

CONFORMS TO FLORIDA BUILDING CODE 2010
ASCE 7-10: CATEGORY C WIND LOADING

MICHAEL MILLER ARCHITECTS

517 DUVAL STREET
KEY WEST, FLORIDA
(305) 294 - 7687

CITY SEXTON'S HOUSE
KEY WEST CEMETERY

701 PASSOVER LANE
KEY WEST, FLORIDA

DATE: MAY 22, 2014
SCALE: AS NOTED
DRAWN BY: AA, AR, AG
CHECKED BY: MM
PROJECT NO: 1203

PORCH DETAILS

A7

Copyright © 2014 Michael Miller Architecture Inc. The design or any part of it and/ or the drawings on this sheet may not be used without written permission of Michael Miller, Architect.

ITB 15-013 DRAWINGS FOR CONSTRUCTION

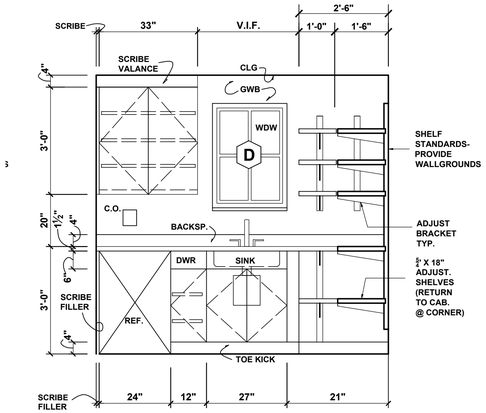

1 / A8 STOREROOM NORTH WALL

SCALE: 1/2"=1'-0"

NOTE: CONTRACTOR TO VERIFY CLEARANCES IN FIELD

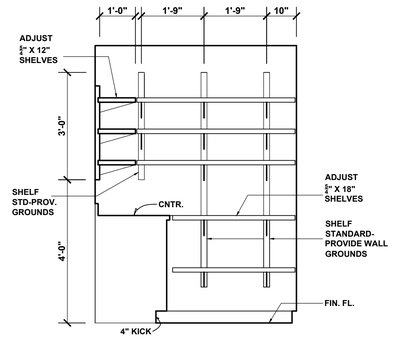

2 / A8 STOREROOM EAST WALL

SCALE: 1/2"=1'-0"

NOTE: CONTRACTOR TO VERIFY CLEARANCES IN FIELD

ALTERNATE NO.3

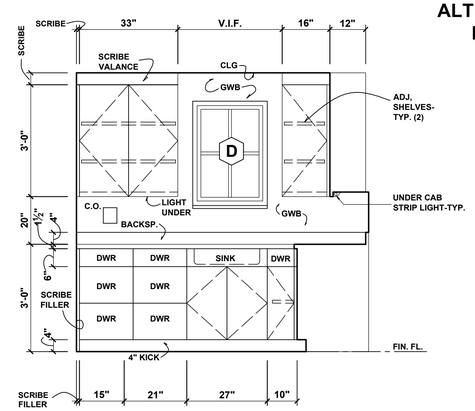

1 / A8 STOREROOM NORTH WALL

SCALE: 1/2"=1'-0"

NOTE: CONTRACTOR TO VERIFY CLEARANCES IN FIELD

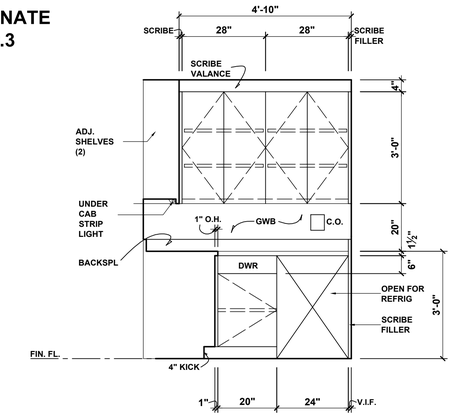

2 / A8 STOREROOM EAST WALL

SCALE: 1/2"=1'-0"

NOTE: CONTRACTOR TO VERIFY CLEARANCES IN FIELD

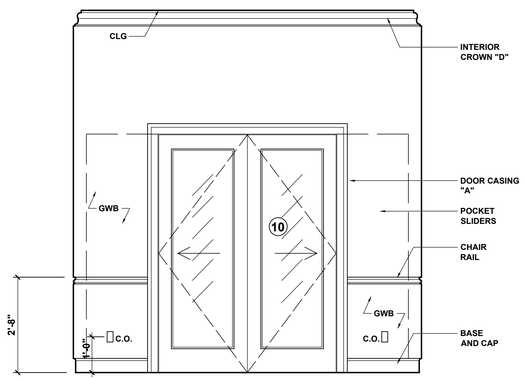

3 / A8 FAMILY ROOM WEST ELEVATION

SCALE: 1/2"=1'-0"

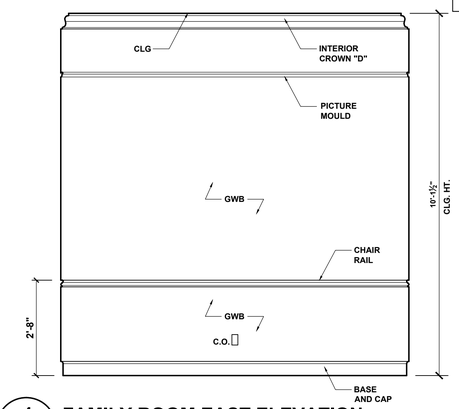

4 / A8 FAMILY ROOM EAST ELEVATION

SCALE: 1/2"=1'-0"

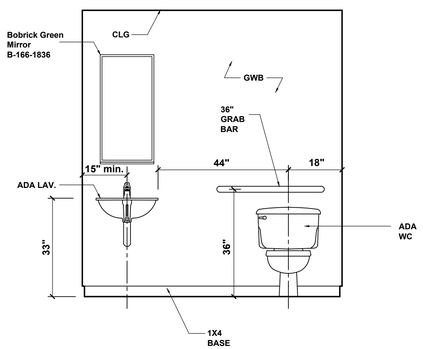

7 / A8 BATHROOM 7 EAST WALL

SCALE: 1/2"=1'-0"

NOTE: CONTRACTOR TO VERIFY CLEARANCES IN FIELD

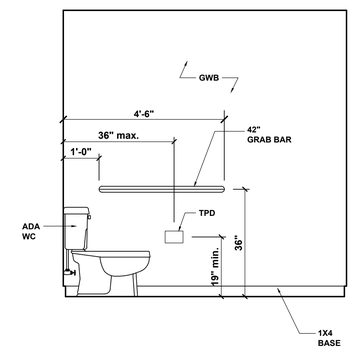

8 / A8 BATHROOM 7 SOUTH WALL

SCALE: 1/2"=1'-0"

NOTE: CONTRACTOR TO VERIFY CLEARANCES IN FIELD

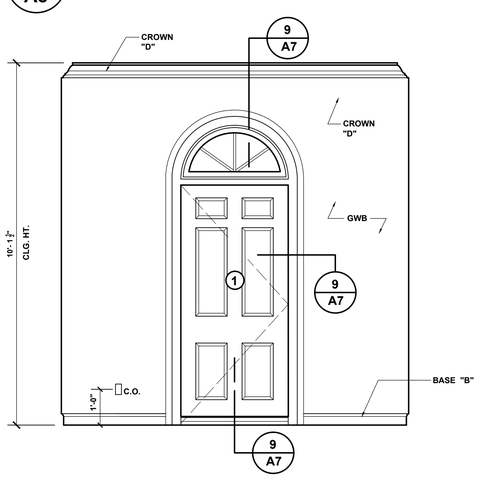

5 / A8 VESTIBULE WEST ELEVATION

SCALE: 1/2"=1'-0"

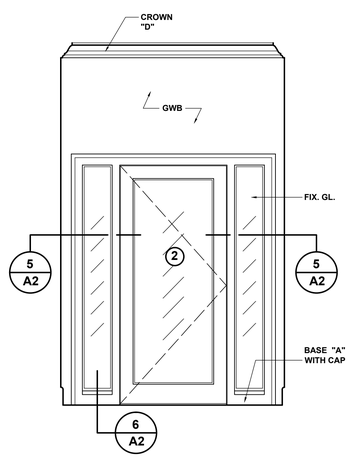

6 / A8 VESTIBULE SOUTH ELEVATION

SCALE: 1/2"=1'-0"

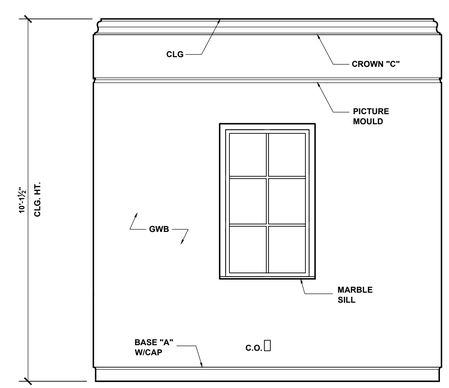

9 / A8 ARCHIVE 6 AND SEXTON'S OFFICE 4 WEST ELEVATION

SCALE: 1/2"=1'-0"

SHEET NOTES:

1. Drawings and specifications are to be used together. Contractors and workers shall consult both when questions concerning the letter and/or intent of the design arise.

2. No changes to the drawings or to the design may be made without the written approval of the architect and Owner's representative.

3. All work shall be done in accordance with all applicable local, state, and national building and life safety codes. The contractor and all Subcontractors shall be familiar with these codes and shall build accordingly.

4. When a conflict or ambiguity exists between a Contractor's understanding of a code and the drawings and specifications, it is the Contractor's responsability to cease work on the item in question and notify the owner's representative in a manner that will allow a timely resolution. Work undertaken as instructed by the building inspector without the Architect's or Owner's representative's permission will be removed at the Contractor's expense.

5. When a conflict or ambiguity exists between the drawings or within the specifications, or if the contractor cannot find information he needs on the drawings or in the specifications it is the responsibility of the Contractor cease work on the item in question and notify the Owner's representative in a manner that will allow timely resolution.

6. In general, interior dimensions are taken from the face of stud or furring strip. Nominal dimensions are noted for standard lumber sizes but actual sizes are given where lumber is to be milled to a non-standard dimension. Exterior dimension lines are taken from face of concrete (e.g. not from the face of the stucco finish).

7. Drawings shall not be scaled. Where errors or inconsistencies exist regarding dimensions on the drawings, the Contractor shall notify the Owner's representative for a resolution before proceeding.

8. "V.I.F." means "Verify in Field". It is the Contractor's responsibility to measure or otherwise confirm a site condition that cannot be accurately determined before construction begins, and to notify the Owner's representative if it differs from what is on the drawings before proceeding with the affected work.

9. The Drawings, Specifications, and other documents prepared by the Architect, belong to the city of Key West and are Copyright © 2014 by Michael Miller, Architects INC ARC10013216.

10. The site and floor plans are laid out according to the survey provided by the Owner, The Contractor shall verify any inconsistencies between the drawings and field conditions before proceeding with the affected work.

CONFORMS TO FLORIDA BUILDING CODE 2010
ASCE 7-10: CATEGORY C WIND LOADING

MICHAEL MILLER ARCHITECTS

517 DUVAL STREET
KEY WEST, FLORIDA
(305) 294 - 7687

CITY SEXTON'S HOUSE
KEY WEST CEMETERY

701 PASSOVER LANE
KEY WEST, FLORIDA

DATE: MAY 22, 2014

SCALE: AS NOTED

DRAWN BY: AA, AR, AG

CHECKED BY: MM

PROJECT NO: 1203

INTERIOR ELEVATIONS AND DETAILS

A8

Copyright © 2014 Michael Miller Architecture Inc. The design or any part of it and/ or the drawings on this sheet may not be used without written permission of Michael Miller, Architect.

ITB 15-013 DRAWINGS FOR CONSTRUCTION

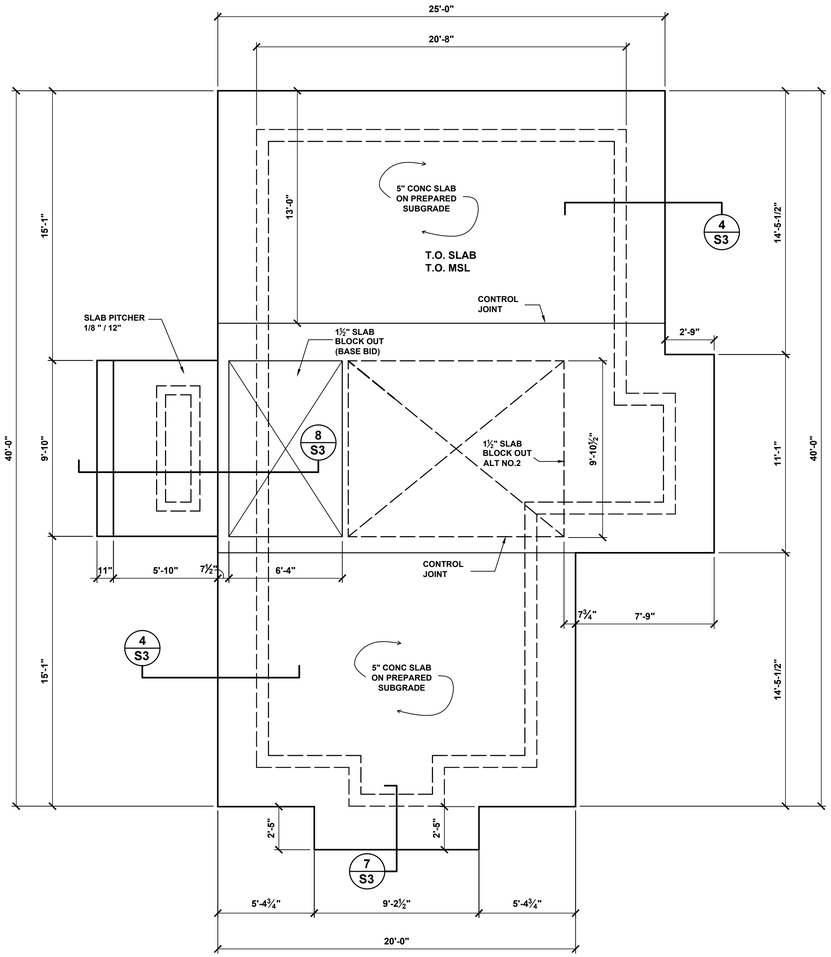

1 / S1 FOUNDATION SLAB PLAN

SCALE: 1/4"=1'-0"

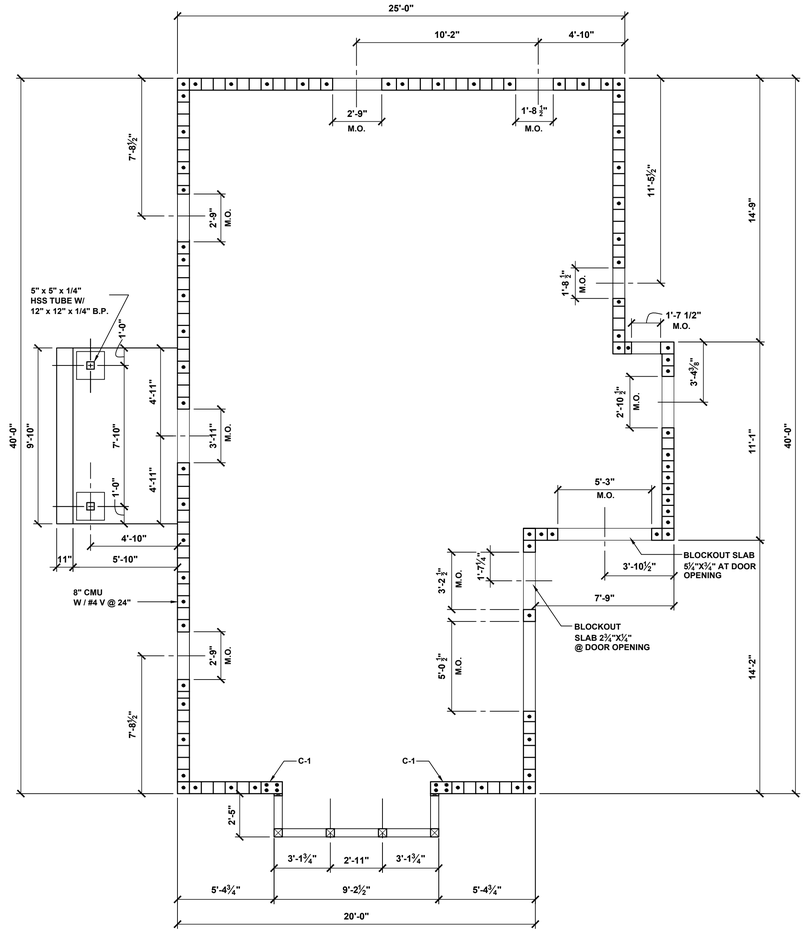

2 / S1 CONCRETE WALLS REINFORCEMENT PLAN

SCALE: 1/4"=1'-0"

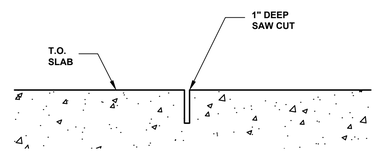

3 / S1 CONTROL JOINT

NO SCALE

SHEET NOTES:

1. Drawings and specifications are to be used together. Contractors and workers shall consult both when questions concerning the letter and/or intent of the design arise.

2. No changes to the drawings or to the design may be made without the written approval of the architect and Owner's representative.

3. All work shall be done in accordance with all applicable local, state, and national building and life safety codes. The contractor and all Subcontractors shall be familiar with these codes and shall build accordingly.

4. When a conflict or ambiguity exists between a Contractor's understanding of a code and the drawings and specifications, it is the Contractor's responsability to cease work on the item in question and notify the owner's representative in a manner that will allow a timely resolution. Work undertaken as instructed by the building inspector without the Architect's or Owner's representative's permission will be removed at the Contractor's expense.

5. When a conflict or ambiguity exists between the drawings or within the specifications, or if the contractor cannot find information he needs on the drawings or in the specifications it is the responsibility of the Contractor cease work on the item in question and notify the Owner's representative in a manner that will allow timely resolution.

6. In general, interior dimensions are taken from the face of stud or furring strip. Nominal dimensions are noted for standard lumber sizes but actual sizes are given where lumber is to be milled to a non-standard dimension. Exterior dimension lines are taken from face of concrete (e.g. not from the face of the stucco finish).

7. Drawings shall not be scaled. Where errors or inconsistencies exist regarding dimensions on the drawings, the Contractor shall notify the Owner's representative for a resolution before proceeding.

8. "V.I.F." means "Verify in Field". It is the Contractor's responsibility to measure or otherwise confirm a site condition that cannot be accurately determined before construction begins, and to notify the Owner's representative if it differs from what is on the drawings before proceeding with the affected work.

9. The Drawings, Specifications, and other documents prepared by the Architect, belong to the city of Key West and are Copyright © 2014 by Michael Miller, Architects INC ARC10013216.

10. The site and floor plans are laid out according to the survey provided by the Owner, The Contractor shall verify any inconsistencies between the drawings and field conditions before proceeding with the affected work.

CONFORMS TO FLORIDA BUILDING CODE 2010
ASCE 7-10: CATEGORY C WIND LOADING

MICHAEL MILLER ARCHITECTS

517 DUVAL STREET
KEY WEST, FLORIDA
(305) 294 - 7687

CITY SEXTON'S HOUSE
KEY WEST CEMETERY

701 PASSOVER LANE
KEY WEST, FLORIDA

DAT: MAY 22, 2014

SCALE: AS NOTED

DRAWN BY: AA, AR, AG

CHECKED BY: MM

PROJECT NO: 1203

FOUNDATION PLAN AND WALL REINFORCEMENT PLAN

S1

Copyright © 2014 Michael Miller Architecture Inc. The design or any part of it and/ or the drawings on this sheet may not be used without written permission of Michael Miller, Architect.

ITB 15-013 DRAWINGS FOR CONSTRUCTION

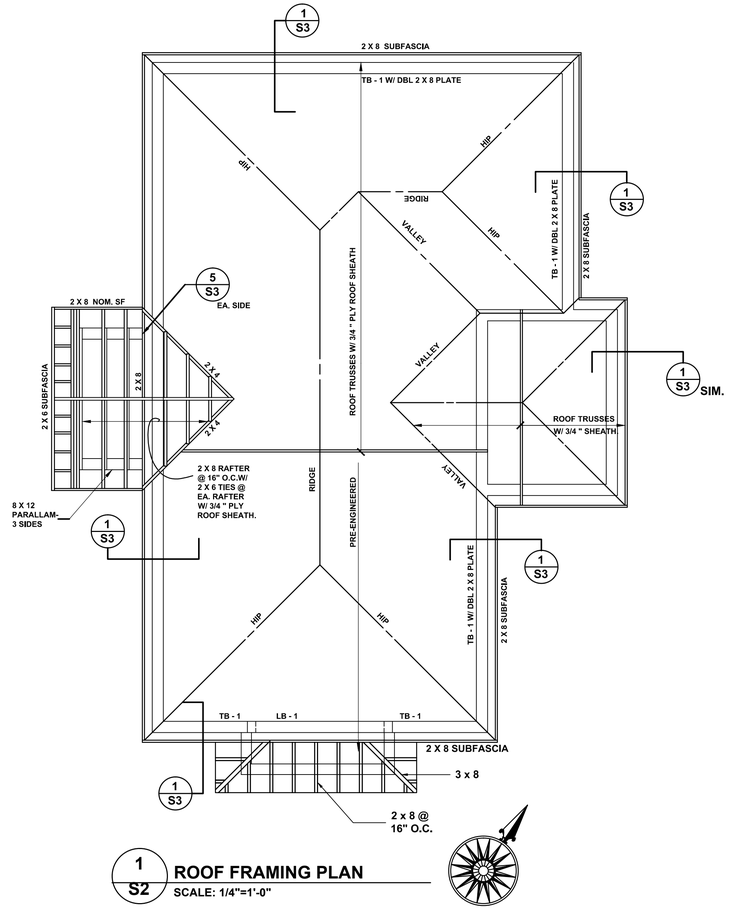

1/S2 ROOF FRAMING PLAN

SCALE: 1/4"=1'-0"

NOTE: PROVIDE STRONGBACKS PER PRE-ENG. TRUSS INSTRUCTIONS

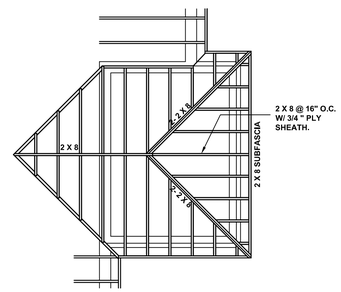

2/S2 ALTERNATE NO.5 ROOF FRAMING PLAN

SCALE: 1/4"=1'-0"

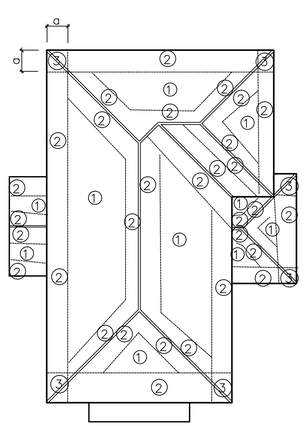

4/S2 ROOF WIND PRESSURES

SCALE: 1/8"=1'-0"

WIND PRESSURES

ULTIMATE/WORKING LOADS

ZONE	+	- (UPLIFT)
1	35.8 / 21.5	-73.1 / -43.9
2	35.8 / 21.5	-103 / -61.8
3	35.8 / 21.5	-103 / -61.8

a = TYPICAL ZONE WIDTH DIMENSION

CONNECTOR SCHEDULE

NOTE: ALL CONNECTORS ARE TO BE MADE BY SIMPSON STRONG-TIE CO., INC. AND SHALL CONFORM TO SIMPSON REQUIREMENTS UNLESS INDICATED OTHERWISE DRAWINGS OR BELOW. SEE DRAWINGS AND DETAILS FOR SPECIFIC CONDITIONS.

WHERE IN CONTACT WITH PRESSURE TREATED LUMBER ALL BOLTS, NAILS, SCREWS AND OTHER FASTENERS SHALL BE HOT-DIPPED GALVANIZED OR STAINLESS STEEL. ALL SIMPSON CONNECTORS IN CONTACT WITH PRESSURE TREATED LUMBER SHALL BE "Z-MAX" GRADE.

SEE DIVISION 6A OF THE SPECIFICATIONS, ROUGH CARPENTRY, FOR EXECUTION REQUIREMENTS. WHERE FASTENERS ARE NOT SPECIFIED USE SIMPSON TABLES FOR THE PARTICULAR CONNECTOR.

WHERE A SPECIFIC CONDITION CANNOT BE MATCHED EXACTLY WITH A SCHEDULED CONNECTOR OR IF THE SCHEDULED CONNECTOR CANNOT BE USED BECAUSE OF A CONFLICT WITH THE ACTUAL SITE CONDITIONS OR BECAUSE OF LACK OF AVAILABILITY THE CONTRACTOR SHALL INFORM THE ARCHITECT, WHO WILL SPECIFY AN ALTERNATIVE CONNECTOR.

ALTERNATE CONNECTORS PROPOSED BY THE GENERAL CONTRACTOR OR BUILDING INSPECTOR MUST BE APPROVED BY THE ARCHITECT.

CONNECTION	CONNECTOR
Foundation Slab to Framing sole plate	1/2 " dia. x 6" all thread anchor bolts 16" o.c. cast in place or epoxied.
Bay Window Sole Plate to Bay Studs	1- H2.5A at each stud.
Bay Window 6x6 Posts to Sole Plate	1-HD3B at each post w/. w/ 3- 5/8 " dia. bolts.
Bay Posts to Lintel Beam	2- 5/8 " dia. thru bolts countersunk each end.
Bar Rafters to Header	1-H2.5A at each rafter.
Bay Ho[Rafter to Header @ Corner	1- HCP at each corner.
Porch Roof Rafters to Parallam Beam	1-H10 at each rafter.
Trusses to Tie Beam and Roof Plate	1-H16 @ each truss w/ 8 1/4 " x 1 3/4 " masonry screws.
Over Trusses and Rafters at Ridges	1-LSTA24 at each rafter and truss.
2 x 8" Roof Rafters to Roof Plate (ALT. NO.5)	1-H10 at each rafter.

BEAM SCHEDULE

MK.	TYPE	SIZE	REINFORCING	REINFORCING
TB-1	CONCRETE TIE BEAM	8" x 16"	6 #4 & #3 STIRRUPS @ 10"	
LB-A	CONCRETE TIE BEAM	8" x 30"	10 #4 & #3 STIRRUPS @ 10"	BEAR ON COL C-1 EA END

COLUMN SCHEDULE

MK.	TYPE	SIZE	REINFORCING	BASE
C-1	CONCRETE	8" x 16"	4 #5 W/ #3 TIES @ 8"	——

SHEET NOTES:

1. Drawings and specifications are to be used together. Contractors and workers shall consult both when questions concerning the letter and/or intent of the design arise.

2. No changes to the drawings or to the design may be made without the written approval of the architect and Owner's representative.

3. All work shall be done in accordance with all applicable local, state, and national building and life safety codes. The contractor and all Subcontractors shall be familiar with these codes and shall build accordingly.

4. When a conflict or ambiguity exists between a Contractor's understanding of a code and the drawings and specifications, it is the Contractor's responsability to cease work on the item in question and notify the owner's representative in a manner that will allow a timely resolution. Work undertaken as instructed by the building inspector without the Architect's or Owner's representative's permission will be removed at the Contractor's expense.

5. When a conflict or ambiguity exists between the drawings or within the specifications, or if the contractor cannot find information he needs on the drawings or in the specifications it is the responsibility of the Contractor cease work on the item in question and notify the Owner's representative in a manner that will allow timely resolution.

6. In general, interior dimensions are taken from the face of stud or furring strip. Nominal dimensions are noted for standard lumber sizes but actual sizes are given where lumber is to be milled to a non-standard dimension. Exterior dimension lines are taken from face of concrete (e.g. not from the face of the stucco finish).

7. Drawings shall not be scaled. Where errors or inconsistencies exist regarding dimensions on the drawings, the Contractor shall notify the Owner's representative for a resolution before proceeding.

8. "V.I.F." means "Verify in Field". It is the Contractor's responsibility to measure or otherwise confirm a site condition that cannot be accurately determined before construction begins, and to notify the Owner's representative if it differs from what is on the drawings before proceeding with the affected work.

9. The Drawings, Specifications, and other documents prepared by the Architect, belong to the city of Key West and are Copyright © 2014 by Michael Miller, Architects INC ARC10013216.

10. The site and floor plans are laid out according to the survey provided by the Owner, The Contractor shall verify any inconsistencies between the drawings and field conditions before proceeding with the affected work.

CONFORMS TO FLORIDA BUILDING CODE 2010
ASCE 7-10: CATEGORY C WIND LOADING

MICHAEL MILLER ARCHITECTS

517 DUVAL STREET
KEY WEST, FLORIDA
(305) 294 - 7687

CITY SEXTON'S HOUSE
KEY WEST CEMETERY

701 PASSOVER LANE
KEY WEST, FLORIDA

DATE: MAY 22, 2014

SCALE: AS NOTED

DRAWN BY: AA, AR, AG

CHECKED BY: MM

PROJECT NO: 1203

ROOF FRAMING PLAN AND STRUCTURAL DETAILS

S2

Copyright © 2014 Michael Miller Architecture Inc. The design or any part of it and/ or the drawings on this sheet may not be used without written permission of Michael Miller, Architect.

ITB 15-013 DRAWINGS FOR CONSTRUCTION

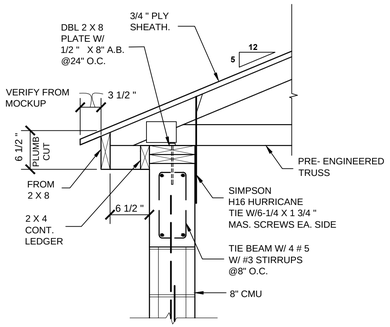

1 / S3 EAVE DETAIL
SCALE: 1"=1'-0"

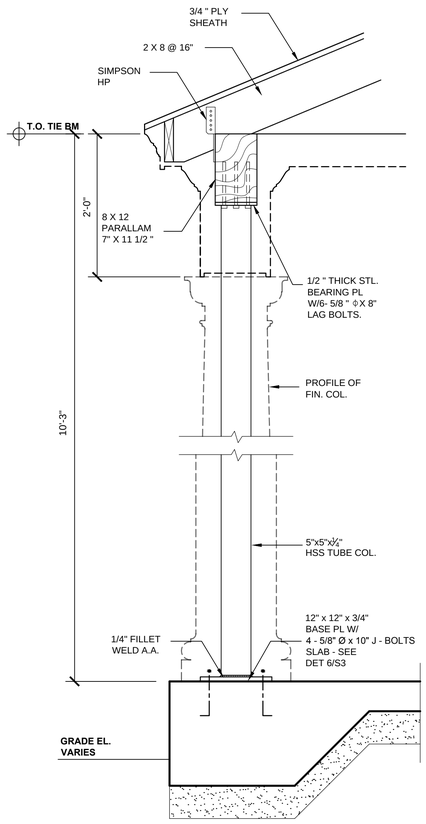

5 / S3 PORCH COLUMN
SCALE: 1"=1'-0"

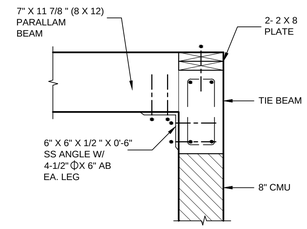

2 / S3 PORCH BM. CONN. @ MAS. WALL
SCALE: 1"=1'-0"

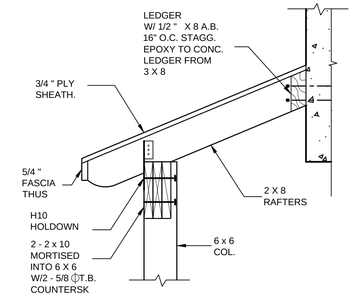

3 / S3 BAY WINDOW ROOF CONNECTORS
SCALE: 1"=1'-0"

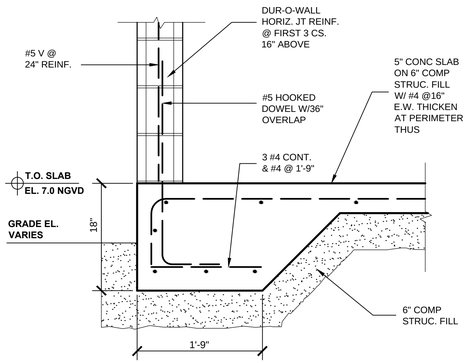

4 / S3 SLAB EDGE DETAIL
SCALE: 1"=1'-0"

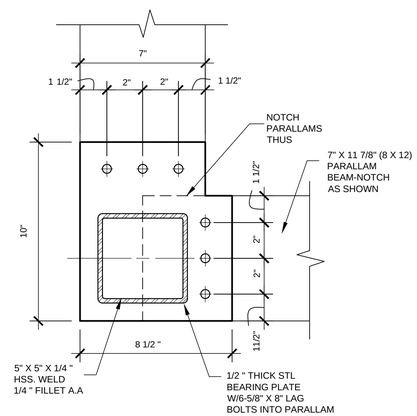

6 / S3 BEARING PLATE AT TOP OF COL.
SCALE: 3"=1'-0"

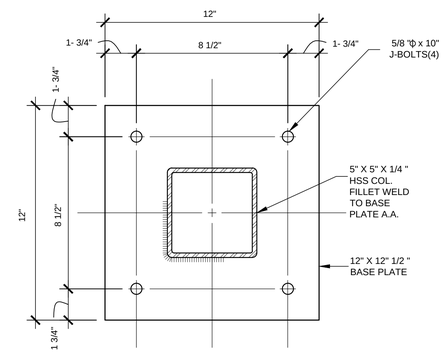

6 / S3 COLUMN BASE PLATE
SCALE: 3"=1'-0"

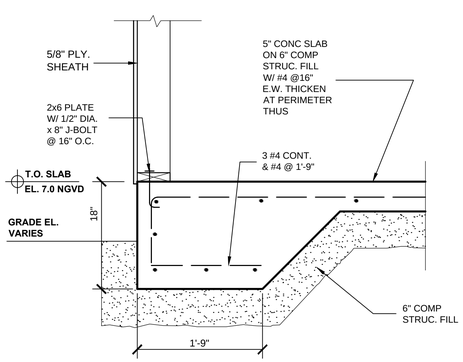

7 / S3 SLAB EDGE DETAIL
SCALE: 1"=1'-0"

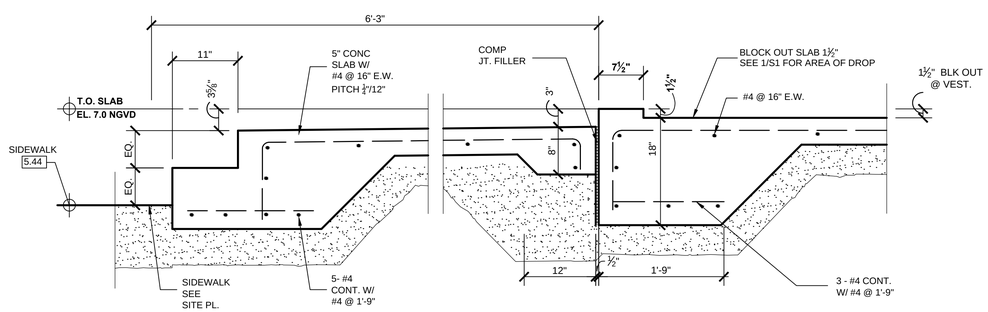

8 / S3 DROP SLAB AT ENTRANCE PORCH
SCALE: 1"=1'-0"

SHEET NOTES:

1. Drawings and specifications are to be used together. Contractors and workers shall consult both when questions concerning the letter and/or intent of the design arise.

2. No changes to the drawings or to the design may be made without the written approval of the architect and Owner's representative.

3. All work shall be done in accordance with all applicable local, state, and national building and life safety codes. The contractor and all Subcontractors shall be familiar with these codes and shall build accordingly.

4. When a conflict or ambiguity exists between a Contractor's understanding of a code and the drawings and specifications, it is the Contractor's responsability to cease work on the item in question and notify the owner's representative in a manner that will allow a timely resolution. Work undertaken as instructed by the building inspector without the Architect's or Owner's representative's permission will be removed at the Contractor's expense.

5. When a conflict or ambiguity exists between the drawings or within the specifications, or if the contractor cannot find information he needs on the drawings or in the specifications it is the responsibility of the Contractor cease work on the item in question and notify the Owner's representative in a manner that will allow timely resolution.

6. In general, interior dimensions are taken from the face of stud or furring strip. Nominal dimensions are noted for standard lumber sizes but actual sizes are given where lumber is to be milled to a non-standard dimension. Exterior dimension lines are taken from face of concrete (e.g. not from the face of the stucco finish).

7. Drawings shall not be scaled. Where errors or inconsistencies exist regarding dimensions on the drawings, the Contractor shall notify the Owner's representative for a resolution before proceeding.

8. "V.I.F." means "Verify in Field". It is the Contractor's responsibility to measure or otherwise confirm a site condition that cannot be accurately determined before construction begins, and to notify the Owner's representative if it differs from what is on the drawings before proceeding with the affected work.

9. The Drawings, Specifications, and other documents prepared by the Architect, belong to the city of Key West and are Copyright © 2014 by Michael Miller, Architects INC ARC10013216.

10. The site and floor plans are laid out according to the survey provided by the Owner, The Contractor shall verify any inconsistencies between the drawings and field conditions before proceeding with the affected work.

CONFORMS TO FLORIDA BUILDING CODE 2010
ASCE 7-10: CATEGORY C WIND LOADING

MICHAEL MILLER ARCHITECTS

517 DUVAL STREET
KEY WEST, FLORIDA
(305) 294 - 7687

CITY SEXTON'S HOUSE
KEY WEST CEMETERY

701 PASSOVER LANE
KEY WEST, FLORIDA

DATE: MAY 22, 2014

SCALE: AS NOTED

DRAWN BY: AA, AR, AG

CHECKED BY: MM

PROJECT NO: 1203

STRUCTURAL DETAILS

S3

Copyright © 2014 Michael Miller Architecture Inc. The designs or any part of it and/or the drawings on this sheet may not

ITB 15-013 DRAWINGS FOR CONSTRUCTION

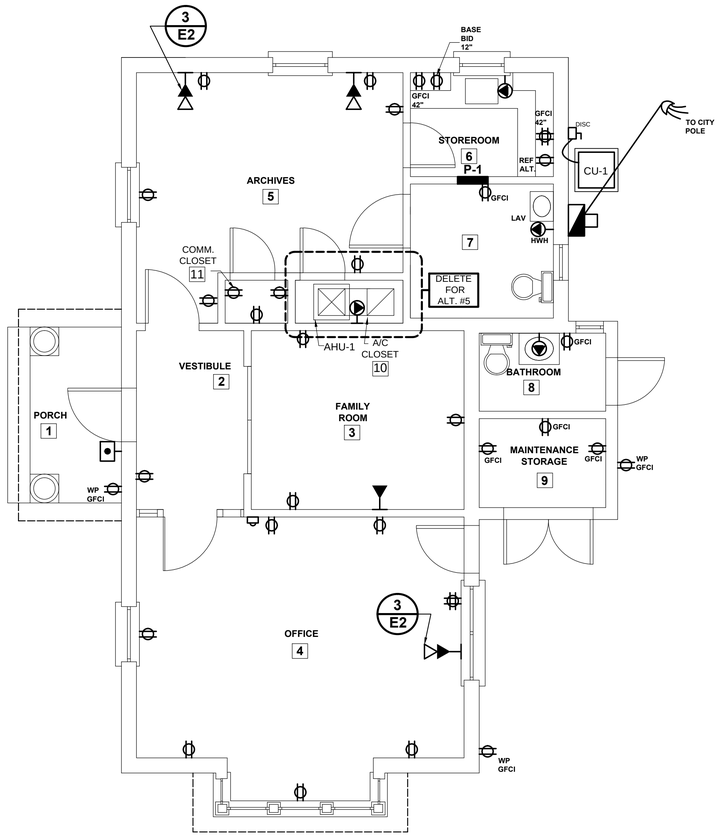

1 E2 POWER PLAN

SCALE: 1/4"=1'-0"

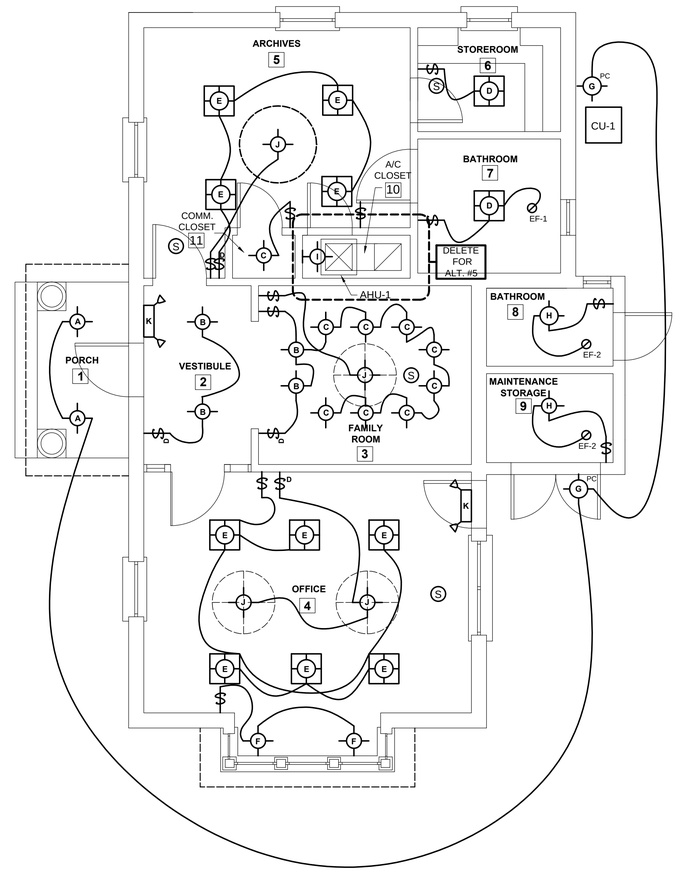

2 E1 LIGHTING PLAN

SCALE: 1/4"=1'-0"

NOTE: SEE REFLECTED CEILING PLAN FOR EXACT LOCATIONS OF FIXTURES (ADJUSTED FOR TRUSS LOCATIONS)

ELECTRICAL LEGEND

- SERVICE MAIN WITH METER
- POWER PANEL
- AC — SPECIAL PURPOSE HARD WIRED CONNECTION
- DUPLEX RECEPTACLE OUTLET
- FOUR-PLEX RECEPTACLE OUTLET
- GFCI — GROUND FAULT CONNECTION INTERCEPT
- WP — WATERPROOF DUPLEX RECEPTACLE OUTLET
- SINGLE POLE SWITCH
- D — SINGLE POLE SWITCH W/DIMMER
- 3 — THREE WAY SWITCH
- CEILING LIGHT FIXTURE
- WALL MOUNTED LIGHT FIXTURE
- R — RECESSED CEILING LIGHT FIXTURE
- SURFACE FLUORESCENT LIGHT FIXTURE
- WALL MOUNTED LIGHT FIXTURE
- J — JUNCTION BOX
- PS — LIGHT W/PULL SWITCH
- PC — LIGHT W/PHOTOCELL SENSOR
- CEILING FAN
- LAND LINE OUTSIDE TELEPHONE CONNECTION
- DEDICATED COMPUTER OUTLET
- INTERCONNECTED LAND LINE TELEPHONE C.
- VOICE OVER IP
- C — CABLE TV OUTLET
- DOOR BELL
- BELL OR CHIME
- CONCEALED WIRING
- UNDERGROUND CONDUIT
- EXIT SIGN
- K — EMERGENCY LIGHT W/BATTERY PACK
- SERVICE RISER AND WEATHER HEAD
- DISCONNECT SWITCH
- S — SMOKE ALARM
- V — CEILING VENT
- PO — PHOTO CELL
- HWH — HOT WATER HEATER
- UR — UNDER COUNTER REFRIGERATOR
- CEILING EXHAUST REGISTER

SHEET NOTES:

1. Drawings and specifications are to be used together. Contractors and workers shall consult both when questions concerning the letter and/or intent of the design arise.

2. No changes to the drawings or to the design may be made without the written approval of the architect and Owner's representative.

3. All work shall be done in accordance with all applicable local, state, and national building and life safety codes. The contractor and all Subcontractors shall be familiar with these codes and shall build accordingly.

4. When a conflict or ambiguity exists between a Contractor's understanding of a code and the drawings and specifications, it is the Contractor's responsability to cease work on the item in question and notify the owner's representative in a manner that will allow a timely resolution. Work undertaken as instructed by the building inspector without the Architect's or Owner's representative's permission will be removed at the Contractor's expense.

5. When a conflict or ambiguity exists between the drawings or within the specifications, or if the contractor cannot find information he needs on the drawings or in the specifications it is the responsibility of the Contractor cease work on the item in question and notify the Owner's representative in a manner that will allow timely resolution.

6. In general, interior dimensions are taken from the face of stud or furring strip. Nominal dimensions are noted for standard lumber sizes but actual sizes are given where lumber is to be milled to a non-standard dimension. Exterior dimension lines are taken from face of concrete (e.g. not from the face of the stucco finish).

7. Drawings shall not be scaled. Where errors or inconsistencies exist regarding dimensions on the drawings, the Contractor shall notify the Owner's representative for a resolution before proceeding.

8. "V.I.F." means "Verify in Field". It is the Contractor's responsibility to measure or otherwise confirm a site condition that cannot be accurately determined before construction begins, and to notify the Owner's representative if it differs from what is on the drawings before proceeding with the affected work.

9. The Drawings, Specifications, and other documents prepared by the Architect, belong to the city of Key West and are Copyright © 2014 by Michael Miller, Architects INC ARC10013216.

10. The site and floor plans are laid out according to the survey provided by the Owner, The Contractor shall verify any inconsistencies between the drawings and field conditions before proceeding with the affected work.

CONFORMS TO FLORIDA BUILDING CODE 2010
ASCE 7-10: CATEGORY C WIND LOADING

MICHAEL MILLER ARCHITECTS

517 DUVAL STREET
KEY WEST, FLORIDA
(305) 294 - 7687

CITY SEXTON'S HOUSE
KEY WEST CEMETERY

701 PASSOVER LANE
KEY WEST, FLORIDA

DATE: MAY 22, 2014

SCALE: AS NOTED

DRAWN BY: AA, AR, AG

CHECKED BY: MM

PROJECT NO: 1203

ELECTRICAL PLANS

E1

Copyright © 2014 Michael Miller Architecture Inc. The design or any part of it and/ or the drawings on this sheet may not be used without written permission of Michael Miller, Architect.

ITB 15-013 DRAWINGS FOR CONSTRUCTION

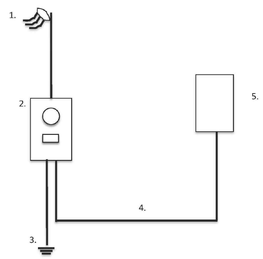

Riser Schematic (N.T.S.)

1. New 200 A 120/240 Volt service. Coordinate weatherhead location with Keys Energy Services. 2" conduit with (2) 3/0, (1) 1/0 THHN.
2. Square D Meter/Main QCB16F200C with feed through lugs. Provide QO2175SB surge breaker.
3. 5/8 x8' copper clad grounding electrode with #6 grounding electrode conductor. Add second ground rod @6'0" if more than 25 Ohms resistance.
4. 2" conduit with (3) 3/0, (1) #6 equipment ground.
5. Square D load center # QO 140L200G.

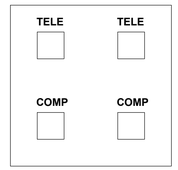

VOICE OVER IP BOARD

3 / E2 VOICE OVER IP BOARD
SCALE: NS

1ϕ 3-WIRE PANELBOARD SCHEDULE			VOLTAGE 120/240 1ϕ 3W
Jobsite: Sexton's House			
PANEL #: P1	Mounting - Flush		Main Amperage: M.L.O.
Location: Store Room			Bus Amperage: 200

Ct. #	KVA ϕA	KVA ϕC	Description	Pole	A/C	Phase	Pole	A/C	Description	KVA ϕA	KVA ϕC	Ct. #
1	1.0		Porch, vestibule, family rm	1	20	A	2	60	ACU (3 ton) *	2.0		2
3		1.2	Office receptacles	1	20	C			"		2.0	4
5	1.0		Office lights	1	20	A	2	30	AHU (5 KW heat)	2.6		6
7		1.0	Bath, store room	1	20	C			"		2.6	8
9	1.0		Archives	1	20	A	1	20	Spare	-		10
11		-	Spare	1	20	C					-	12
13	-		Spare	1	20	A	2	30	Tankless water heater	3.5		14
15		0.8	Maint/Storage/Bath	1	20	C			" " "		3.5	16
17			Space			A			Space			18
19						C						20
21						A						22
23						C						24
25						A						26
27						C						28
29						A						30
31						C						32
33						A						34
35						C						36
37						A						38
39						C						40

Total KVA / ϕA	9.1
Total KVA / ϕC	9.1
Total KVA	18.2
Line Amperes connected	75.9

* non coincidental

LIGHT FIXTURE SCHEDULE

MK	FIXTURE TYPE	MFR/CATALOG NO.	LAMP
A	LED SPOT	WINONA ASBRLED-3024-12V-L0-BRZ-F0-SH0-C3-STD	
B	RECESSED DOWNLIGHT	ELITE # B5IC-LED-14W-120V-DIM-FL-30K-AT with #L507W-WH	
C	RECESSED SPOT LIGHT	ELITE # LD6IC-AT-RL663-14W-120V-DIMTR-30K-W-WH	
D	SURFACE FLUORESCENT	LITHONIA # LHQM- S W 3 RN	
E	SURFACE FLUORESCENT	LITHONIA # FM 72 ACLS LP	1-32/40 CIRCLINE LAMP
F	RECESSED DOWNLIGHT	ELITE # B6IC-LED-14W-120-DIM-FL-30K/L607CL-WH	
G	SECURITY LIGHT	WF HARRIS 300S-OW-HW-13QD-HPF-120-LP-PC-3BW-DBK	1-13W FL-120
H	SURFACE FIXTURE	WF HARRIS #80-CP-HW-26PLT-HPF-120-LP	1-26 QUAD LAMP
I	WALL MOUNT	LITHONIA # VW1501 M12	150 A
J	CEILING FAN	HUNTER CLASSIC 23855/ 22691/ 23194	52" WALNUT BLADES; 12" DOWN ROD, BLACK.
K	EXIT EMERGENCY LIGHT	LITHONIA LHQM - P - W - 3 -G- N - ELA - MR24K0606	

SHEET NOTES:

1. Drawings and specifications are to be used together. Contractors and workers shall consult both when questions concerning the letter and/or intent of the design arise.

2. No changes to the drawings or to the design may be made without the written approval of the architect and Owner's representative.

3. All work shall be done in accordance with all applicable local, state, and national building and life safety codes. The contractor and all Subcontractors shall be familiar with these codes and shall build accordingly.

4. When a conflict or ambiguity exists between a Contractor's understanding of a code and the drawings and specifications, it is the Contractor's responsability to cease work on the item in question and notify the owner's representative in a manner that will allow a timely resolution. Work undertaken as instructed by the building inspector without the Architect's or Owner's representative's permission will be removed at the Contractor's expense.

5. When a conflict or ambiguity exists between the drawings or within the specifications, or if the contractor cannot find information he needs on the drawings or in the specifications it is the responsibility of the Contractor cease work on the item in question and notify the Owner's representative in a manner that will allow timely resolution.

6. In general, interior dimensions are taken from the face of stud or furring strip. Nominal dimensions are noted for standard lumber sizes but actual sizes are given where lumber is to be milled to a non-standard dimension. Exterior dimension lines are taken from face of concrete (e.g. not from the face of the stucco finish).

7. Drawings shall not be scaled. Where errors or inconsistencies exist regarding dimensions on the drawings, the Contractor shall notify the Owner's representative for a resolution before proceeding.

8. "V.I.F." means "Verify in Field". It is the Contractor's responsibility to measure or otherwise confirm a site condition that cannot be accurately determined before construction begins, and to notify the Owner's representative if it differs from what is on the drawings before proceeding with the affected work.

9. The Drawings, Specifications, and other documents prepared by the Architect, belong to the city of Key West and are Copyright © 2014 by Michael Miller, Architects INC ARC10013216.

10. The site and floor plans are laid out according to the survey provided by the Owner, The Contractor shall verify any inconsistencies between the drawings and field conditions before proceeding with the affected work.

CONFORMS TO FLORIDA BUILDING CODE 2010
ASCE 7-10: CATEGORY C WIND LOADING

MICHAEL MILLER ARCHITECTS

517 DUVAL STREET
KEY WEST, FLORIDA
(305) 294 - 7687

CITY SEXTON'S HOUSE
KEY WEST CEMETERY

701 PASSOVER LANE
KEY WEST, FLORIDA

DATE: MAY 22, 2014

SCALE: AS NOTED

DRAWN BY: AA, AR, AG

CHECKED BY: MM

PROJECT NO: 1203

ELECTRICAL PANEL SCHEDULE, RISER DIAGRAMS AND LIGHT FIXTURE SCHEDULE

E2

Copyright © 2014 Michael Miller Architecture Inc. The design or any part of it and/ or the drawings on this sheet may not be used without written permission of Michael Miller, Architect.

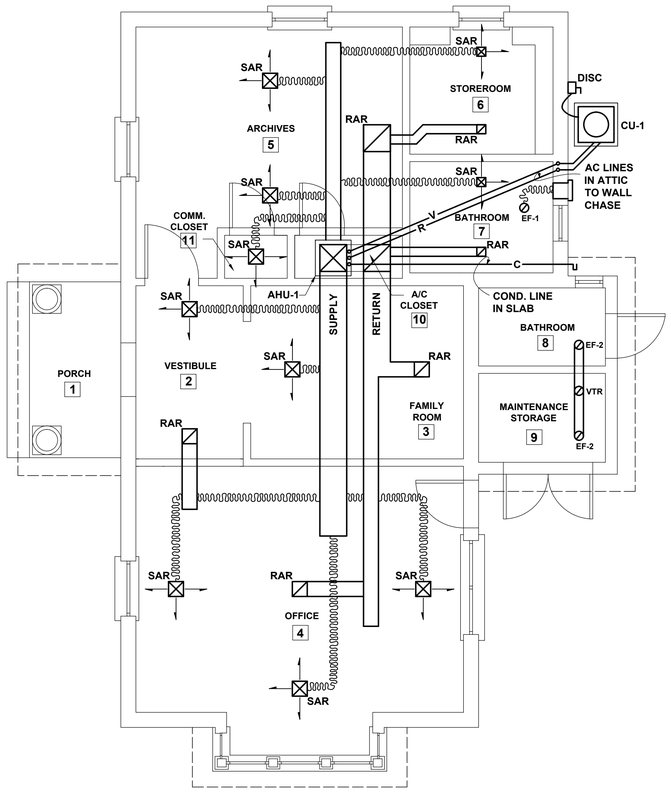

1 / M1 **REFLECTED FIRST FLOOR HVAC PLAN**
SCALE: 1/4"=1'-0"

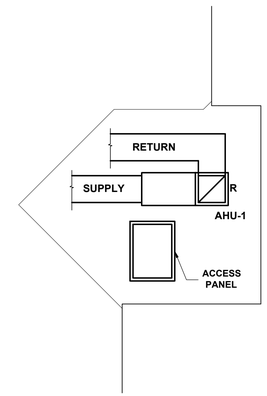

2 / M1 **ALTERNATE NO.5 SCHEMATIC AHU ON ATTIC OVER MAINT. STORAGE**
SCALE: 1/4"=1'-0"

LEGEND

CU	COMPRESSOR UNIT
AHU	AIR HANDLING UNIT
DS	DISCONNECT SWITCH
C	CONDENSATE
R	REFRIGERANT
V	VACUUM
RAR	RETURN AIR REGISTER
SAG	SUPPLY AIR GRILL
EF	EXHAUST FAN

SAR — CEILING AIR SUPPLY REGISTER

EXHAUST FAN REGISTER

RAR — CEILING AIR RETURN REGISTER

EXHAUST FAN WALL HOOD

WALL AIR SUPPLY REGISTER

INSULATED FLEX DUCT

SHEET NOTES:

1. Drawings and specifications are to be used together. Contractors and workers shall consult both when questions concerning the letter and/or intent of the design arise.

2. No changes to the drawings or to the design may be made without the written approval of the architect and Owner's representative.

3. All work shall be done in accordance with all applicable local, state, and national building and life safety codes. The contractor and all Subcontractors shall be familiar with these codes and shall build accordingly.

4. When a conflict or ambiguity exists between a Contractor's understanding of a code and the drawings and specifications, it is the Contractor's responsability to cease work on the item in question and notify the owner's representative in a manner that will allow a timely resolution. Work undertaken as instructed by the building inspector without the Architect's or Owner's representative's permission will be removed at the Contractor's expense.

5. When a conflict or ambiguity exists between the drawings or within the specifications, or if the contractor cannot find information he needs on the drawings or in the specifications it is the responsibility of the Contractor cease work on the item in question and notify the Owner's representative in a manner that will allow timely resolution.

6. In general, interior dimensions are taken from the face of stud or furring strip. Nominal dimensions are noted for standard lumber sizes but actual sizes are given where lumber is to be milled to a non-standard dimension. Exterior dimension lines are taken from face of concrete (e.g. not from the face of the stucco finish).

7. Drawings shall not be scaled. Where errors or inconsistencies exist regarding dimensions on the drawings, the Contractor shall notify the Owner's representative for a resolution before proceeding.

8. "V.I.F." means "Verify in Field". It is the Contractor's responsibility to measure or otherwise confirm a site condition that cannot be accurately determined before construction begins, and to notify the Owner's representative if it differs from what is on the drawings before proceeding with the affected work.

9. The Drawings, Specifications, and other documents prepared by the Architect, are instruments of the Architect's service and are Copyright © 2014 by Michael Miller, Architects INC ARC10013216.

10. The site and floor plans are laid out according to the survey provided by the Owner, The Contractor shall verify any inconsistencies between the drawings and field conditions before proceeding with the affected work.

CONFORMS TO FLORIDA BUILDING CODE 2010
ASCE 7-10: CATEGORY C WIND LOADING

MICHAEL MILLER ARCHITECTS

517 DUVAL STREET
KEY WEST, FLORIDA
(305) 294 - 7687

CITY SEXTON'S HOUSE
KEY WEST CEMETERY

701 PASSOVER LANE
KEY WEST, FLORIDA

DATE: MAY 22, 2014

SCALE: AS NOTED

DRAWN BY: AA, AR, AG

CHECKED BY: MM

PROJECT NO: 1203

HVAC PLANS AND DETAILS

M1

Copyright © 2014 Michael Miller Architecture Inc. The design or any part of it and/ or the drawings on this sheet may not be used without written permission of Michael Miller, Architect.

ITB 15-013 DRAWINGS FOR CONSTRUCTION

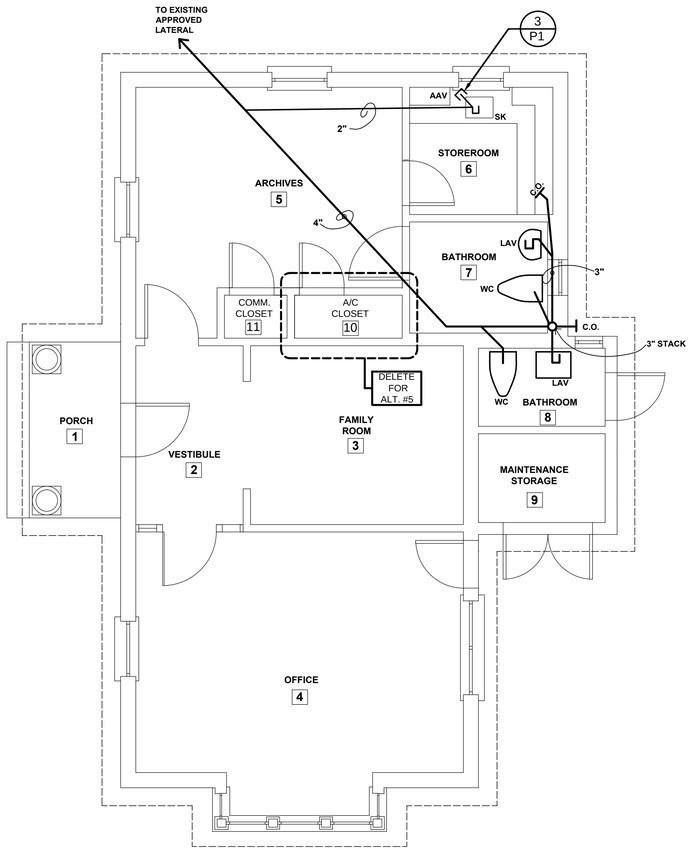

1 / P1 **SANITARY PLUMBING PLAN**

SCALE: 1/4"=1'-0"

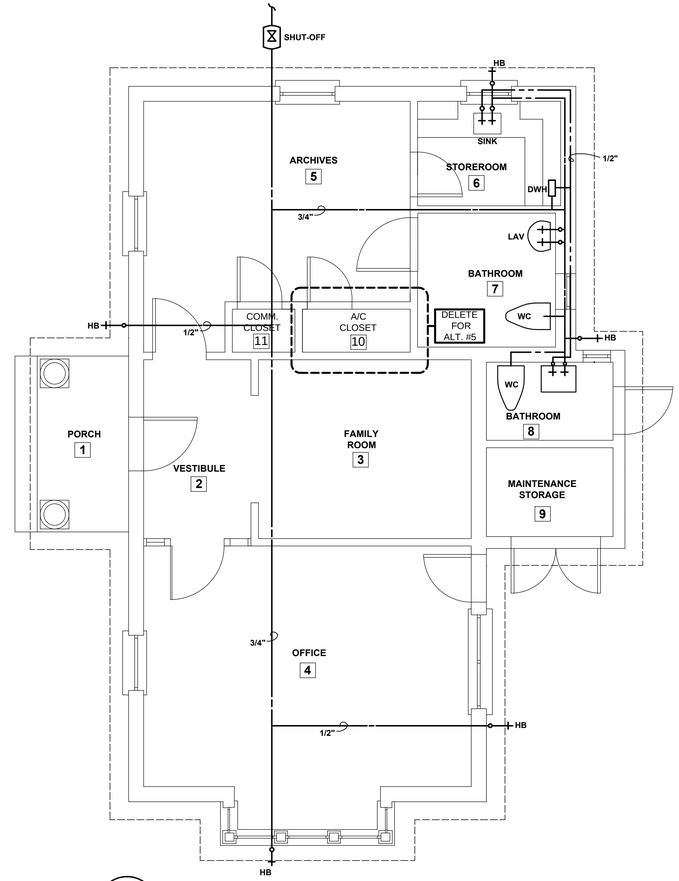

2 / P1 **DOMESTIC PLUMBING PLAN**

SCALE: 1/4"=1'-0"

LEGEND

A.A.	SHUT OFF
AAV	AIR ADMITTANCE VALVE
DWH	DEMAND HOT WATER HEATER
LAT	LATERAL
LAV	LAVATORY
SAN	SANITARY WASTE LINE
TWH	TANKLESS WATER HEATER
V	VENT
VTR	VENT THROUGH ROOF
WC	WATER CLOSET
— — — —	COLD WATER
— — — —	HOT WATER
SK	SINK
HB	HOSE LIFT

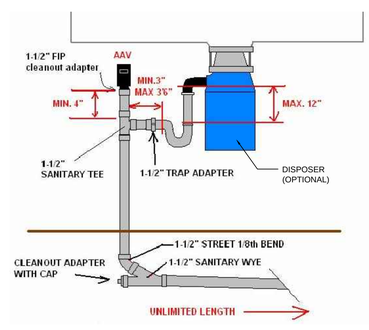

3 / P1 **SINK VENT**

SCALE: NS

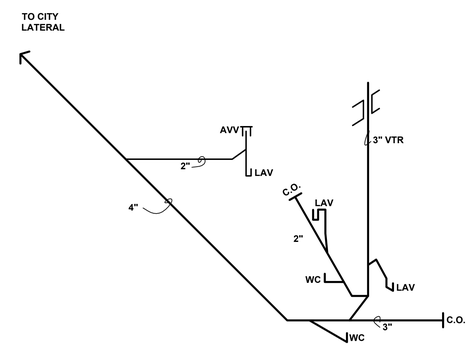

4 / P1 **SANITARY ISOMETRIC**

SCALE: NS

SHEET NOTES:

1. Drawings and specifications are to be used together. Contractors and workers shall consult both when questions concerning the letter and/or intent of the design arise.

2. No changes to the drawings or to the design may be made without the written approval of the architect and Owner's representative.

3. All work shall be done in accordance with all applicable local, state, and national building and life safety codes. The contractor and all Subcontractors shall be familiar with these codes and shall build accordingly.

4. When a conflict or ambiguity exists between a Contractor's understanding of a code and the drawings and specifications, it is the Contractor's responsability to cease work on the item in question and notify the owner's representative in a manner that will allow a timely resolution. Work undertaken as instructed by the building inspector without the Architect's or Owner's representative's permission will be removed at the Contractor's expense.

5. When a conflict or ambiguity exists between the drawings or within the specifications, or if the contractor cannot find information he needs on the drawings or in the specifications it is the responsibility of the Contractor cease work on the item in question and notify the Owner's representative in a manner that will allow timely resolution.

6. In general, interior dimensions are taken from the face of stud or furring strip. Nominal dimensions are noted for standard lumber sizes but actual sizes are given where lumber is to be milled to a non-standard dimension. Exterior dimension lines are taken from face of concrete (e.g. not from the face of the stucco finish).

7. Drawings shall not be scaled. Where errors or inconsistencies exist regarding dimensions on the drawings, the Contractor shall notify the Owner's representative for a resolution before proceeding.

8. "V.I.F." means "Verify in Field". It is the Contractor's responsibility to measure or otherwise confirm a site condition that cannot be accurately determined before construction begins, and to notify the Owner's representative if it differs from what is on the drawings before proceeding with the affected work.

9. The Drawings, Specifications, and other documents prepared by the Architect, belong to the city of Key West and are Copyright © 2014 by Michael Miller, Architects INC ARC10013216.

10. The site and floor plans are laid out according to the survey provided by the Owner, The Contractor shall verify any inconsistencies between the drawings and field conditions before proceeding with the affected work.

CONFORMS TO FLORIDA BUILDING CODE 2010
ASCE 7-10: CATEGORY C WIND LOADING

MICHAEL MILLER ARCHITECTS

517 DUVAL STREET
KEY WEST, FLORIDA
(305) 294 - 7687

CITY SEXTON'S HOUSE
KEY WEST CEMETERY

701 PASSOVER LANE
KEY WEST, FLORIDA

DATE: MAY 22, 2014

SCALE: AS NOTED

DRAWN BY: AA, AR, AG

CHECKED BY: MM

PROJECT NO: 1203

PLUMBING PLANS AND ISOMETRIC

P1

Copyright © 2014 Michael Miller Architecture Inc. The design or any part of it and/ or the drawings on this sheet may not be used without written permission of Michael Miller, Architect.

ITB 15-013 DRAWINGS FOR CONSTRUCTION