STRUCTURAL NOTES

GENERAL NOTES:

1. The Governing Code for this project is the Florida Buiding Code, 2010 Edition. This Code prescribes which Edition of each referenced standard applies to this project.

2. To the best of our knowledge, the Structural drawings and specifications comply with the applicable requirements of the Governing Building Code.

3. Construction is to comply with the requirements of the Governing Building Code and all other applicable Federal, State, and local Codes, Standards, Regulations and Laws.

4. The Structural documents are to be used in conjunction with the Architectural documents. Use these notes in conjunction with the project specifications. If a conflict exist, notify the Architect.

5. Details labeled "Typical" apply to all situations that are the same or similar to those specifically referenced, whether or not they are keyed in at each location. Questions regarding the applicability of typical details shall be resolved by the Architect.

6. Openings shown on Structural drawings are only pictorial. See the Architectural and M.E.P. drawings for the size and location of openings in the structure.

7. Contractors who discover discrepancies, omissions or variations in the contract documents during bidding shall immediately notify the Architect. The Architect will resolve the condition and issue a written clarification.

8. The General Contractor shall coordinate all contract documents with field conditions and dimensions and project shop drawings prior to construction. Do not scale drawings; use only printed dimensions. Report any discrepancies in writing to the Architect prior to proceeding with work. Do not change size or location of Structural members without written instructions from the Structural Engineer of record.

9. The contractor shall protect adjacent property, his own work and the public from harm. The contractor is solely responsible for construction means and methods, and jobsite safety including all OSHA requirements.

10. The Structure is designed to be structurally sound when completed. Prior to completion, the Contractor is responsible for stability and temporary bracing, including, but not limited to, masonry walls. Wherever the Contractor is unsure of these requirements, the Contractor shall retain a Florida Licensed Engineer to design and inspect the temporary bracing and stability of the Structure.

11. DESIGN WIND LOADS :

Governing Code	ASCE 7-10
Basic Wind Speed	Vult= 180 MPH/Vasd= 140 MPH
Risk Category	II
Building Enclosure	Enclosed
Directionality Factor	Kd = 0.85
Exposure	D
Mean Roof Height	<15'-0" FEET

Wood Construction:

1. All wood construction and connections shall conform to AITC "American Institute of Timber Construction" manual, and the "National Design Specification for Wood Construction", 2005 edition, and Florida Building Code, chapter 23.

2. All wood in contact with concrete or masonry shall be pressure treated.

3. All bolts and bolted connections shall conform to ASTM A307. Use washers between wood and all bolt heads and nuts.

4. All metal wood connectors shall be galvanized and shall be manufactured by Simpson Strong Tie Co., or approved equivalent.

5. Unless noted otherwise on plan, provide double studs at all jambs of openings up to 6'-0". Use triple studs for openings greater than 6'-0" and less than 10'-0".

6. Where beams or columns are formed of two (2) or more members, they shall be full length and fastened together per chapter 23 of the Florida Building Code.

7. Exterior walls shall have 5/8" CDX or better plywood nailed with 10d galvanized box nails at 6" o.c. maximum at all panel edges. Space nails at 12" o.c. maximum along intermediate framing. Block all panel edges.

Slabs on Grade:

1. Refer to geotechnical report for subgrade preparation more than 12" below bottom of slab.

2. Above subgrade, use fill containing not more than 10% passing #200 sieve and maximum 1 inch diameter. Compact to 95% of maximum dry density as determined by modified proctor ASTM D-1557. Each layer of fill shall not exceed 6" loose thickness. Compact prior to placement of the next layer.

3. Fill placement and compaction shall be monitored and accepted by the testing agency. Take a min. of one field density test (ASTM D-1556 or D-2922) for each 2,500 square feet of each layer. The testing agency shall randomly select test locations.

4. For interior slabs place 10 mil polyethylene sheeting between soil and bottom of slab. Do not use any sheeting below exterior concrete slabs.

5. See the Architectural drawings for slab on grade depressions and other requirements.

Reinforced Concrete:

1. Comply with ACI 301 and 318.

2. Provide Structural Concrete with a minimum ultimate Compressive Design Strength of 4,000 psi (W/C=0.40) in 28 days.

3. Use normal weight concrete for all Structural Members. u.o.n.

4. Provide ASTM A-615 Grade 60 reinforcing steel. Reinforcing shall be accurately placed, rigidly supported and firmly tied in place, with appropriate bar supports and spacers. Lap bottom steel over supports and top steel at midspan (u.o.n.). Hook discontinuous ends of all top bars and all bars in walls, u.o.n. Provide cover over reinforcing as follows:

Element	bottom	top	sides
Slabs on Grade	2"	1"	2"
Walls Retaining Fill	–	–	2"
Walls Above Grade	–	–	1"

5. Tension Development Length and Lap Dplice Lengths shall be as follows:

TENSION DEVELOPMENT LENGTH FOR BARS (IN)		
REBAR	TOP BARS	OTHER BARS
#3	22	17
#4	29	22
#5	36	28
#6	43	33
#7	63	48
#8	72	55

LAP SPLICE LENGTH FOR BARS (IN)		
REBAR	TOP BARS	OTHER BARS
#3	28	22
#4	37	29
#5	47	36
#6	56	43
#7	81	63
#8	93	72

(F'c = 3,000 PSI, cover ≥ Db, spacing ≥ 2Db for beams & columns, spacing ≥ 3Db for others bars.
Top bars are horizontal bars with more than 12 inches of concrete cast below bars.)

6. Provide construction joints in accordance with ACI 318, section 6.4. Provide keyways and adequate dowels. Submit drawings showing location of construction joints and direction of pour for review.

7. Provide 3/4" chamfer for all exposed corners.

8. Provide reinforcing steel placer with a set of Structural Drawings for field reference. Inspect reinforcing steel placing from Structural Drawings.

Chemical Adhesive for anchoring reinforcing bars, threaded bars and anchor bolts:

1. Use an epoxy, acrylic or polyester resin adhesive system such as the Hilti Hit HY150, ITW ramset/red head epcon A7 or C6 injection system, powers rawl power-fast system, Simpson strong-tie AT or ET, allied fastener allied gold a-1000, or accepted equivalent. Follow manufacturer's specifications for use and installation.

2. Confirm the absence of reinforcing steel by drilling a 1/4" diameter pilot hole for each anchor. Do not cut reinforcing steel without approval of the Structural Engineer.

3. Refer to manufacturer's installation instructions for appropriate drill size. Thoroughly clean hole including removal of dust prior to filling with epoxy.

4. Provide anchor embedment, spacing and edge distance as shown on the drawings.

5. Threaded rods are A-36 galvanized steel, u.o.n.

ASD WIND LOAD PRESSURE FOR WINDOWS & DOORS Kd = 0.85

TRIBUTARY AREA	ZONE 4 (PSF)		ZONE 5 (PSF)	
	(+)	(-)	(+)	(-)
0 sf to 19 sf	+47.0	-50.9	+47.0	-62.7
20 sf to 29 sf	+44.9	-48.8	+44.9	-58.4
30 sf to 49 sf	+43.6	-47.5	+43.6	-56.2
50 sf to 99 sf	+42.2	-46.2	+42.2	-53.2
100 sf to 199 sf	+40.1	-44.0	+40.1	-48.8

NOTES:

1. ZONE ⑤ IS DEFINED AS ANY DOOR OR WINDOW WITHIN 3'-0" FROM ANY CORNER OF THE BUIILDING. ALL OTHER LOCATIONS ARE DEFINED AS ZONE ④ .
2. VALUES INDICATED CAN BE INTERPOLATED.
3. FOR Kd = 1.0, MULTIPLY VALUES BY 1.18.
4. FOR ULTIMATE VALUES, MULTIPLY VALUES IN TABLE BY 1.67.

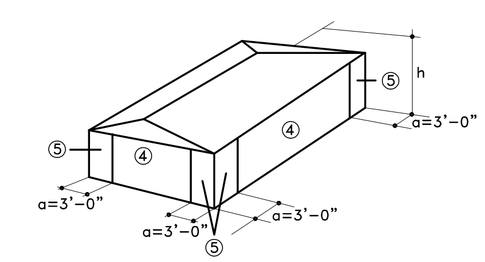

WIND PRESSURE DIAGRAM
WALLS

UNITED Engineering, Inc.
STRUCTURAL ENGINEERS
12595 SW 137 Avenue, Suite 112
Miami, Florida 33186
Tel: 786.425.0500
Email: info@unitedeng.pro
Certificate of Authorization No: 29691
UNITED Project No.: 0301-13

NO.	DATE	REVISION	BY
5			
4			
3			
2			
1			

DESIGNER: AM
DRAWN BY: DE
CHECKER: JF
SCALE: AS SHOWN

01/26/15
JUAN J. FUENTES, PE, SE, LEED AP
STRUCTURAL ENGINEER
FLORIDA LICENSE NO. 82436

CHEN·MOORE &ASSOCIATES
155 South Miami Ave.
Miami, FL 33130
Tel: 786.497.1500
Fax: 786.497.2300
EB 0004593

FOR: CITY OF KEY WEST
TURTLE KRAALS WALL REPAIR
231 MARGARET STREET
KEY WEST, FLORIDA 33040

General Notes and Wind Pressures

Date: January 26, 2014

S1.0

Drawing:

PROJECT NO.: 0301-13

P:\0301-13 Turtle Kraals\4-Drawings\UEI TB-24x36.dwg last edited on November 7, 2014 6:28 PM by jfuentes

DOOR/WINDOW SCHEDULE

MARK	SIZE WIDTH x HEIGHT	NOA #	GLASS TYPE	ANCHOR TYPE	MULLIAN TYPE	COMMENTS	DESIGN PRESSURE (PSF)
1	36" x 84"	12-0223.29	N/A	A	–	PANIC HARDWARE	+44.9/-48.8

NOTES:
1. CONTRACTOR SHALL FIELD VERIFY & COORD. WINDOW SIZES.
2. CONTRACOR SHALL INSTALL DOOR & WINDOW IN ACCORDANCE WITH NOA

NOTE TO CONTRACTOR:

EXISTING CMU WALL SUPPORTS NUMEROUS CONDUITS AND PIPING. PRIOR TO CONSTRUCTION, THE CONTRACTOR SHALL FIELD VERIFY EXISTING CONDUITS TO DETERMINE IF THEY ARE IN CURRENT USE. CONTRACTOR SHALL BE RESPONSIBLE FOR MAINTAINING SERVICES WITHOUT INTERRUPTION.

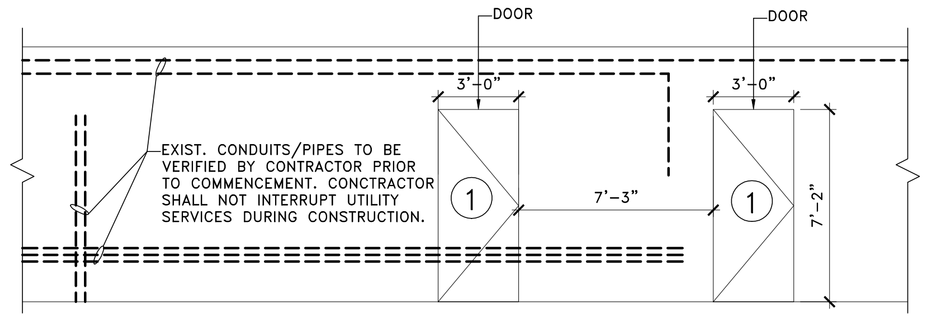

PARTIAL SW ELEVATION

SCALE: 1/4"=1'-0"

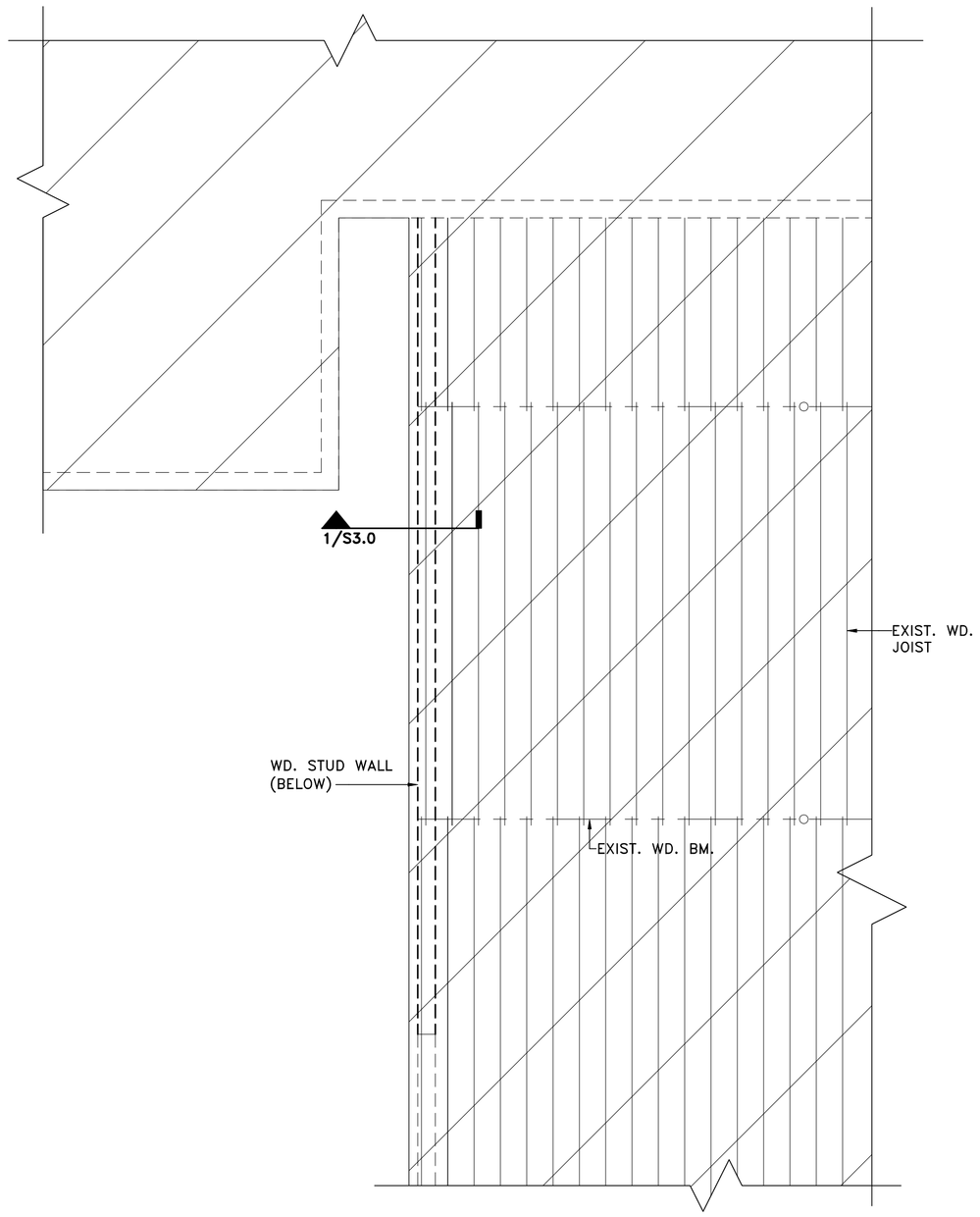

PARTIAL ROOF FRAMING PLAN

SCALE: 1/4"=1'-0"

NOTE TO CONTRACTOR:

CONTRACTOR TO MATCH EXIST. FLOOR AND WALL FINISHES.

"SUGGESTED CONSTRUCTION SEQUENCE":

1. FIELD VERIFY EXISTING CONDITIONS. ANY DISCREPANCIES SHALL BE REPORTED TO THE EOR.
2. INSTALL SHORING (BY DELEGATED ENGINEER).
3. SAWCUT AND REMOVE EXISTING CMU WALL AND SLAB.
4. PRESSURE GROUT BELOW FOOTING.
5. INSTALL CONCRETE THICKENED EDGE AND CONCRETE SLAB.
6. INSTALL WOOD STUD WALL (PALTES, STUD, SILLS, HEADERS, PLYWOOD, AND CONNECTORS).
7. REMOVE SHORING.

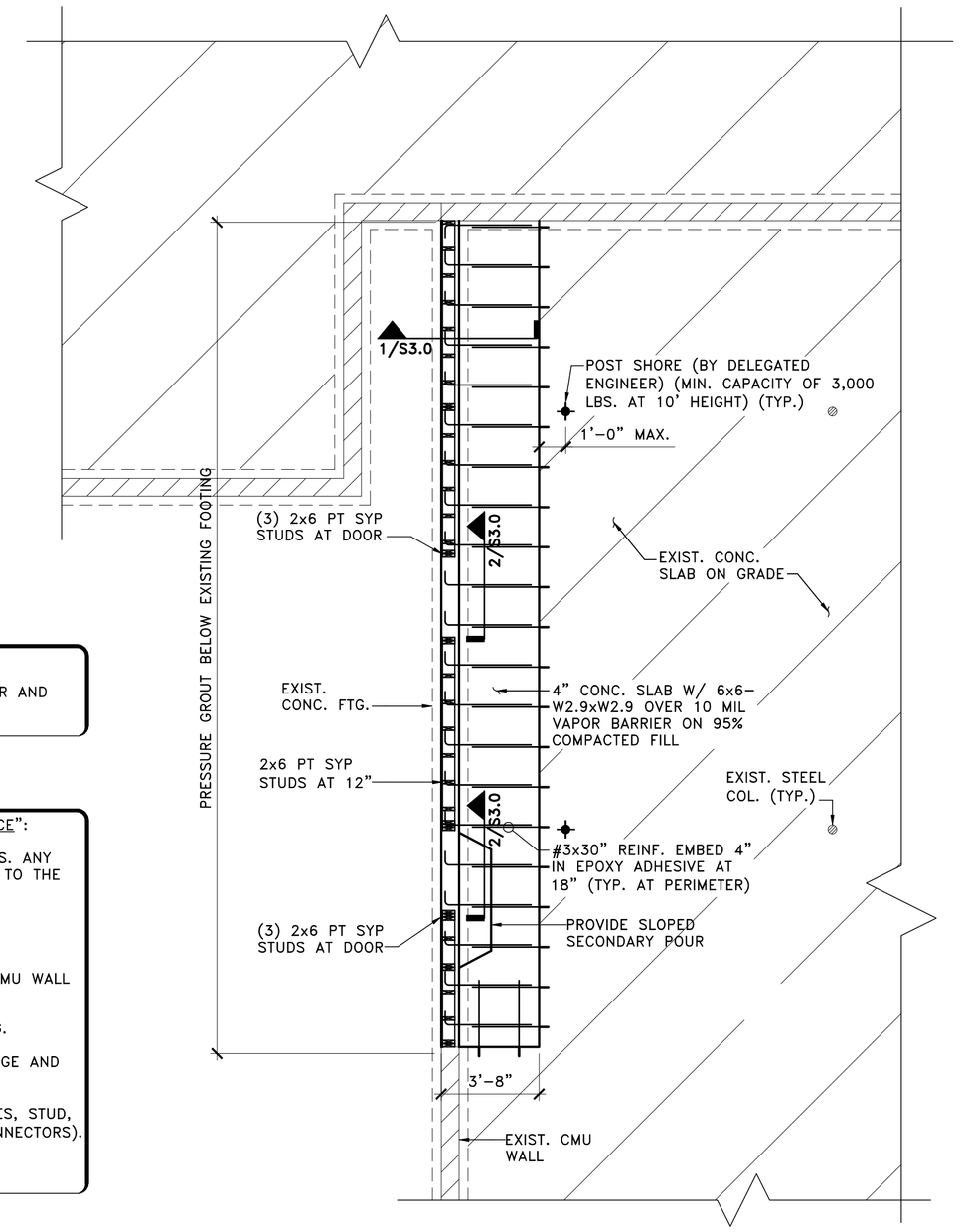

PARTIAL FLOOR PLAN

SCALE: 1/4"=1'-0"

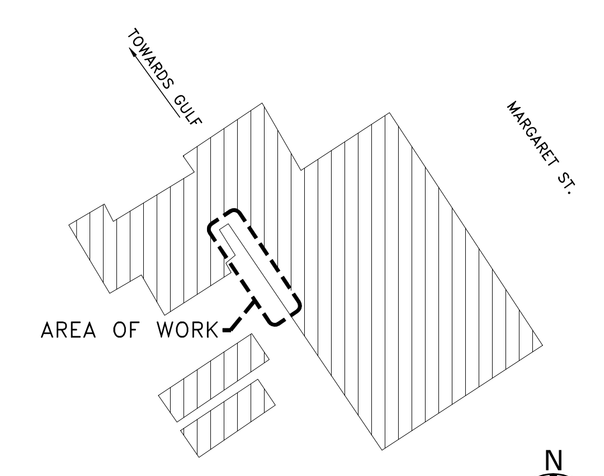

KEY PLAN

NTS

UNITED Engineering, Inc.
STRUCTURAL ENGINEERS
12595 SW 137 Avenue, Suite 112
Miami, Florida 33186
Tel.: 786.347.5250
Email: info@unitedeng.pro
Certificate of Authorization No. 29691
UNITED Project No.: 0301-13

NO.	DATE	REVISION	BY
5			
4			
3			
2			
1			

DESIGNER: AM
DRAWN BY: DE
CHECKER: JF
SCALE: AS SHOWN

01/26/15
JUAN J. FUENTES, PE, SE, LEED AP
STRUCTURAL ENGINEER
FLORIDA LICENSE No. 62426

CHEN·MOORE &ASSOCIATES
155 South Miami Ave,
Penthouse 11-A
Miami, Florida 33130
Tel: 786.497.1500
Fax: 786.497.2300
EB 0004593

FOR: CITY OF KEY WEST
TURTLE KRAALS WALL REPAIR
231 MARGARET STREET
KEY WEST, FLORIDA 33040

Partial Roof and Floor Plans

Date: January 26, 2014

S2.0

Drawing:
PROJECT NO.: 0301-13

P:\0301-13 Turtle Kraals\4-Drawings\UEI TB-24x36.dwg last edited on November 7, 2014 6:28 PM by jfuentes

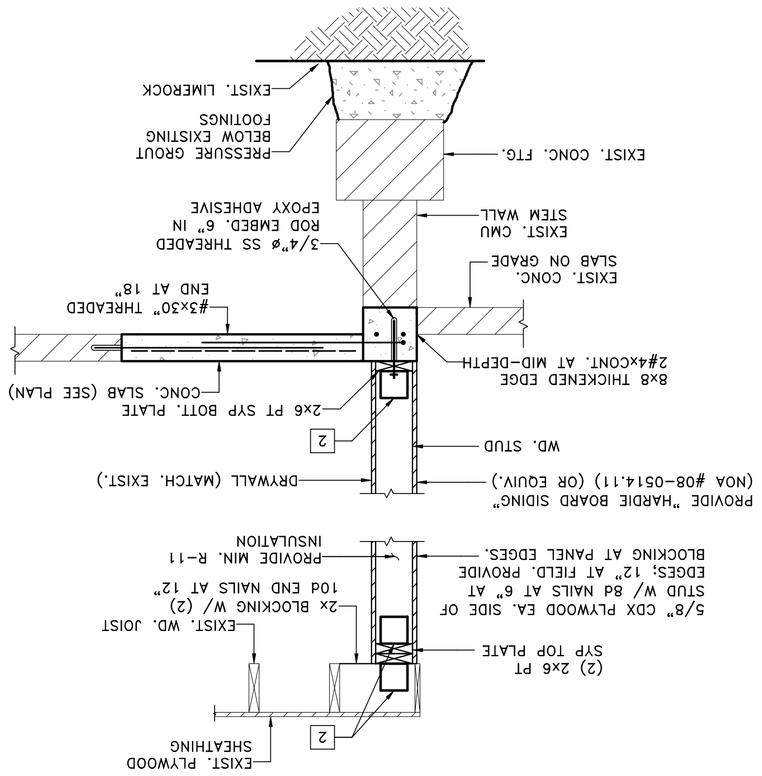

1 WD. STUD WALL SECTION
SCALE: 3/4"=1'-0"

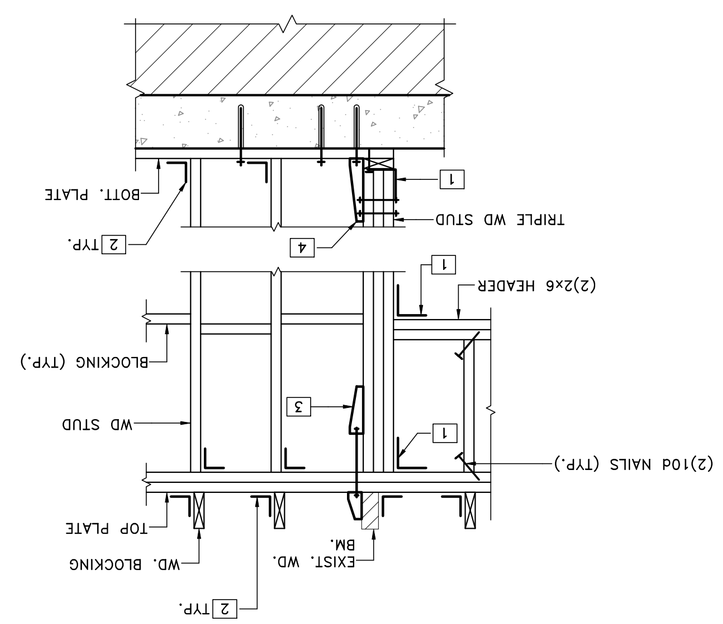

2 WALL AT DOOR OPENING
SCALE: 3/4" = 1'-0"

WOOD CONNECTOR SCHEDULE

MARK	DESCRIPTION	NOA #/FL #	CONNECTOR ALLOWABLE LOAD VALUES (LBS) UPLIFT	DOWN	LATERAL LOAD PARALLEL	LATERAL LOAD PERPENDICULAR	NAIL SIZE & QUANTITY
1	L550	10446.16	--	--	600	-	(8) 10d NAILS
2	L50	10446.12	--	--	360	-	(6) 10d×1½" NAILS
3	VGT W/ HDU2	11470.7	4,940	--	-	-	(16) SDS 1/4"x3" SCREWS (OR EQUIV.) INTO BEAM (10) SDS 1/4"x3" SCREWS (OR EQUIV.) INTO STUD
4	HD5	12708.2	4,875	-	-	-	(2) 3/4"ø A307 INTO STUDS 3/4"ø THREADED ROD IN EPOXY ADHESIVE

Sections

FOR: CITY OF KEY WEST
TURTLE KRAALS WALL REPAIR
231 MARGARET STREET
KEY WEST, FLORIDA 33040

CHEN•MOORE &ASSOCIATES
155 South Miami Ave,
Penthouse 11-A
Miami, Florida 33130
Tel: 786.497.1500
Fax: 786.497.2300
EB 0004593

01/26/15
JUAN J. FUENTES, PE, SE, LEED AP
STRUCTURAL ENGINEER
FLORIDA LICENSE No. 62426

DESIGNER: AM
DRAWN BY: DE
CHECKER: JF
SCALE: AS SHOWN

NO.	DATE	REVISION	BY
5			
4			
3			
2			
1			

UNITED Engineering, Inc.
STRUCTURAL ENGINEERS
12595 SW 137 Avenue, Suite 112
Miami, Florida 33186
Tel: 786.347.5250
Email: info@unitedeng.pro
Certificate of Authorization No. 29691
UNITED Project No.: 0301-13

Date: January 26, 2014
Drawing: S3.0
PROJECT NO.: 0301-13

P:\0301-13 Turtle Kraals\4-Drawings\UEI TB-24x36.dwg last edited on November 7, 2014 6:28 PM by jfuentes