KEY WEST HISTORIC SEAPORT
PHASE ONE
KEY WEST, FLORIDA

ADDENDUM NO. 1

February 17, 2015

The information contained in this Addendum adds information to be included in the Bid and is hereby made a part of the Contract Documents.

1. Sheet A-2 and A-4 show "flush concrete retaining curb/ 6" conc. edge at both sides" of the new brick boardwalk. Sheet C-3 detail 5 shows "12"x12" concrete grade beam both sides of crosswalk" with an 8" slab under the brick. Please confirm we will follow detail 5 on sheet C-3 for both locations.

   Yes, follow detail 5 on sheet C-3 for both locations.

2. Sheet A-4 and A-5 shows "6" conc. curb" at both parking areas. Please confirm this will be a FDOT Type "D" Curb as shown in detail 8 on sheet C-3.

   Yes, use FDOT type "D" curb for all 6" concrete curbing.

3. Sheet A-4 shows "existing contrasting brick" at the southwest area of work. This contrasting brick does NOT exist. Also, the drawings show this brick running perpendicular to the ramp direction. Please advise.

   Add the contrasting brick to the end of the existing ramp to form a square (approximately 4'x4') of contrasting brick.

4. Please provide additional information for the "Conc. Edges" shown on sheet A-4 around the new brick pavers leading into Key West Bait and Tackle.

   The concrete edging for this area will be 6" wide X 12" deep concrete curb w/2 #5 continuous (top is flush with brick).

5. Will there be a concrete slab under these brick pavers? If so, how thick.

   There will be a 4" concrete slab under the bricks. Provide a 6" sub-base of crushed little stone, compacted to 95% density. Remove any rocks from the setting bed to create a smooth bearing surface. Place 2" of compacted sand over base prior to laying brick.

6. Sheet S-1 Wood and Framing Note 6 shows "provide blocking between all joists 2x6 or greater at intervals not to exceed 8 feet." Please confirm we need 2x10 blocking for the new deck framing.

Provide full depth blocking (2x12)

7. Sheet S-1 Foundation & Concrete Note 7 shows "exposed edges of concrete shall have 1/2" chamfer. Please confirm the new 12"x24" grade beam will have chamfered edges.

   Yes, provide ½" chamfer edges.

8. Sheet S-1 Foundation & Concrete Note 19 shows "anchor bolts... shall be minimum 5/8" galvanized steel and embedded minimum 7" into concrete". Do we need the 7" embedment?

   Use 5/8" Stainless Steel, 5" embedment. See Revised S-1

9. Sheet A-2 - Areas #3 shows new Ipe decking under the existing stairs. Sheet S-1 - Area 3 does NOT show any framing in this location. Please advise.

   Area revised to show concrete slab in area described above. See Revised S-1

10. The existing wood ramp for the bathrooms at area 3 has concrete footers poured over the existing brick pavers. The Deck Framing Plan at Area 1 on Sheet S-1 shows a new "12x24" grade beam" which will be poured against these pavers. We are concerned the wood ramp / footers will undermine during the installation of this grade beam. Also, due to the 3' thick layer of #57 stone, the trench will be 5' below these footers. Please advise.

    See Revised S-1 for new section cut and shallower trench. Contractor to shore/support adjacent structures and appurtenances as necessary to build to construction documents.

11. **All "IPE" wood decking will be- premium grade IPE, 5/4"x6" surface four sides, eased edge, at least partially air dried, wood decking dock boards shall be full length boards. Provide ¼" spacing between all boards.**

12. **See attached light pole anchor detail for all poles attached to wood boardwalk.**

13. Please advise if detail A S-1 is to be used at the Deck Framing Plan – Area 1 on sheet S-1. Currently this detail is not indicated in Area 1.

    Yes it will be used in Area 1.

14. Will a staging area be provided?

a. How close to the project will this staging area be located?

   Within project limits.

15. It was mentioned at the pre-bid meeting that the pavers would be supplied by the owner.

a. Please confirm that all pavers required for the project be supplied by the owner?

b. If pavers are not supplied by the owner please provide a specification for the pavers that are to be used.

The contractor is to supply the brick pavers for the "new" brick areas, including the crosswalks and the area in front of the bait shop (Area 5).

The owner will provide brick pavers for approximately 2,500 S.F. of 4x8 brick pavers. The area for the 2,500 S.F. brick replacement includes the raised brick work (in area one, waterside of the recording studio), in front and side of Conch Republic Seafood Restaurant (water side) and replacement of remaning old brick at the Elizabeth Street Plaza by the water. The contractors price will include removal of existing pavers, preparation of existing base and the pick up of the owner provided pavers from Fleming Key. Price shall also include the disposal of broken brick and "good" brick to be placed on pallets and delivered to owners storage area. Add this cost to the bid form miscellaneous line items.

Brick Paving shall be modular solid masonry unit, grade A, 3-5/8" x 2-1/4" x 7-5/8". Units shall comply w/ASTM C-216/SW (severe weathering) standards for face brick. Brick shall be as manufactured by ACME BRICK CO., BELDON BRICK CO., or approved equal. Installation shall be over 4" min., thickness, reinf. soil supported conc. base slab, sloped to drain, and provided/expansion joints to all structural elements. See conc. specification for additional information. Brick units shall be set in a full mortar bed, types per ASTM 270.

16. Please provide a specification on the paint that is to be used the striping of the parking lots.

Thermoplastic per FDOT design standards.

17. The bid form indicates that a schedule of values broken down by trade / type of work needs to be submitted with the bid. The current bid form/schedule has all scopes of work/trades broken down/separated. This bid form in turn becomes the schedule of values. Please advise if other documents are required at the time of bid.

The bid form is not the schedule of values. In addition to the bid form you must provide a schedule of values that breaks down your bid costs further.

a. Typically the bidders and/or low bidder has 24 hours to submit a schedule of values for a project. I propose for your consideration that all bidders must submit a SOV with 24 hours of the bid date and time. Please advise if this is acceptable for this project.

No, the bidder will be considered non-responsive if schedule of values is not included in bid package.

18. Specification section 02240 Dewatering indicates that all work must be completed/installed "in the dry". This specification section speaks specifically to the requirements of dewatering which include the following:

a. 920 GPM groundwater treatment system. This work will be taking place during rainy season. Do provisions need to be made to handle surface water?

b. Contractor shall apply and obtain dewatering permit from SFWMD including fees and charges for dewatering and disposal. Based on past experience obtaining SFWMD dewatering permits can be a lengthy process.

Dewatering permit may or may not be required.

c. It was discussed at the pre-bid meeting that a May start date should be expected with a duration of 90 days. Will obtaining a SFWMD permit be included in the 90 day project duration?

No. It will not.

19. Sheet E-3 does not specify which light fixture is Type 3 and which fixture is Type 4. Please clarify.

Type 3 light fixture is the same as type 4. The only difference is that type 3 has a reflector that makes a wide beam of light and type 4 is a narrower width but projects the light out further (as shown on photometrics).

20. Please clarify how much brick will be required to be replace at Area 1.

The contractor is responsible for this. All brick in the higher walkway area needs to be replaced.

21. Sheet C-3 Detail 5 indicates that the concrete bands on either side of brick paver crosswalk are to be colored concrete. Color is to be white. Please confirm that these bands are to be colored concrete.

The concrete bands will be regular concrete color.

22. Sheet C-3 detail 11 Pay Station Base/Anchor. Please a specification and dimensions, material, manufacture etc. There is not sufficient information in this detail.

The manufacturer is Cale America (www.caleamerica.com, I-877-620-2253). See attached cut sheets of base.

23. Will as-built drawing be required? Please provide a specification of what will be required for as-builts.

    Yes. In front end docs, PG. 66- supp conditions Art. 72 "Final Payment".

24. It was discussed to seal coat the existing asphalt once all work is complete. Please provide the extents of seal coating.

    Provide price to seal coat the entire parking lot of Area 5 (within the limit of work area shown on revised sheet A-4. Include within this price 4 direction arrows (shown on revised A-4) and restriping all existing striping being covered over by seal coat (including loading zone, fire lanes and other existing striping).

a. If required what line item is this be included on the bid form?

    Line item #8 (misc. items).

25. Sheet A-5 indicates a tree that is in conflict with a new "D" curb. Please advise if this tree is to be removed.

    See landscape plan L-0 for information on all existing trees and removals.

26. The landscape sheets indicated new trees, plants and shrubby in locations of existing trees. It is not clearly indicated if these existing trees and vegetation need to be removed. Please advise.

    See sheet L-0.

27. **Contractor shall purchase and install 15 bike racks to be located in the field. This will include all anchorage hardware (stainless steel) and a 16"x16"x16" concrete foundation base (if placed individually). Add this cost in the bid form miscellaneous line items.**

    Brick rack: SKTRO, AL, PC, SFM

    Product: Trio Bike Rack

    Body Material: Cast Aluminum

    Body Powder Coat Color: Aluminum texture

    Dimensions: 12" L x 2.75" D x 33.5" H

    Mounting: Surface mounted

    See attached photo/ cut sheet of bike rack.

28. **The existing water meters the contractor can use for his irrigation system is located on Margaret Street in the sidewalk at the entrance to the gavel parking lot.**

29. **Attached is the pre-bid sign-in sheet.**

All other elements of the Contract and Bid documents, including the Bid Date shall remain unchanged.

All bidders shall acknowledge receipt and acceptance of this Addendum No.1 by submitting the Addendum with their proposal. Proposals submitted without acknowledgment or without this addendum may be considered non-responsive.

X _____ X _____

Signature Name of Business

End of Addendum No 1.

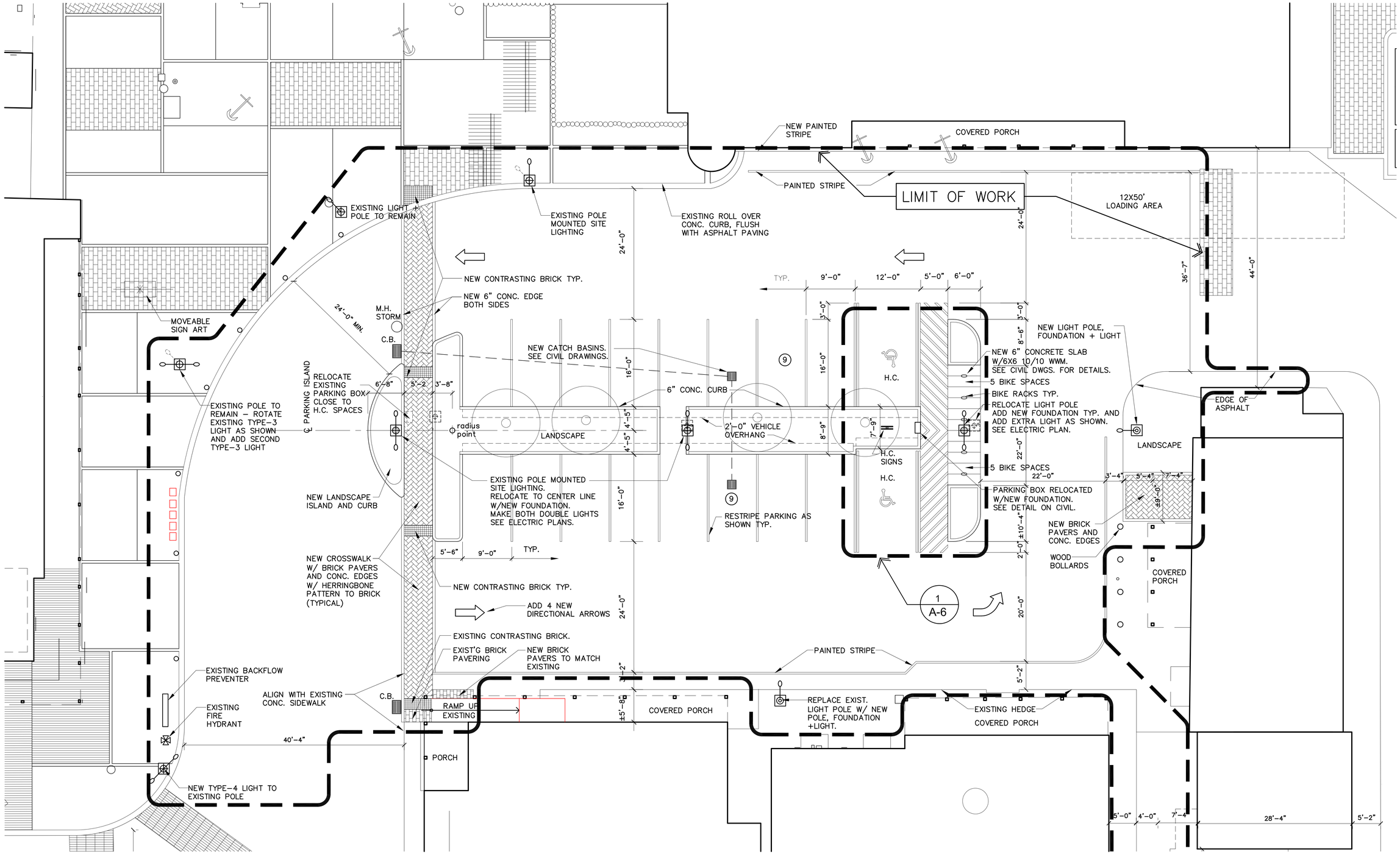

HISTORIC SEAPORT HARBORWALK - AREA #5 (PROPOSED)

SCALE: 1/8"=1'-0"

KEY WEST HISTORIC SEAPORT
PHASE I
KEY WEST, FLORIDA

WILLIAM P. HORN
ARCHITECT, P.A.

915 EATON ST.
KEY WEST,
FLORIDA
33040

TEL. (305) 296-8302
FAX (305) 296-1033

LICENSE NO.
AA 0003040

KEY WEST HISTORIC SEA PORT PHASE 1

KEY WEST BIGHT
KEY WEST, FL. 33040

SEAL

THESE DRAWINGS MAY NOT BE REPRODUCED WITHOUT WRITTEN AUTHORIZATION BY WILLIAM P. HORN

DATE
02-25-14
06-19-14 HARC
01-12-15 BID

REVISIONS
02-18-15 ADDENDUM #1

DRAWN BY
OCE
FH
EMA

PROJECT NUMBER
1226

A-4

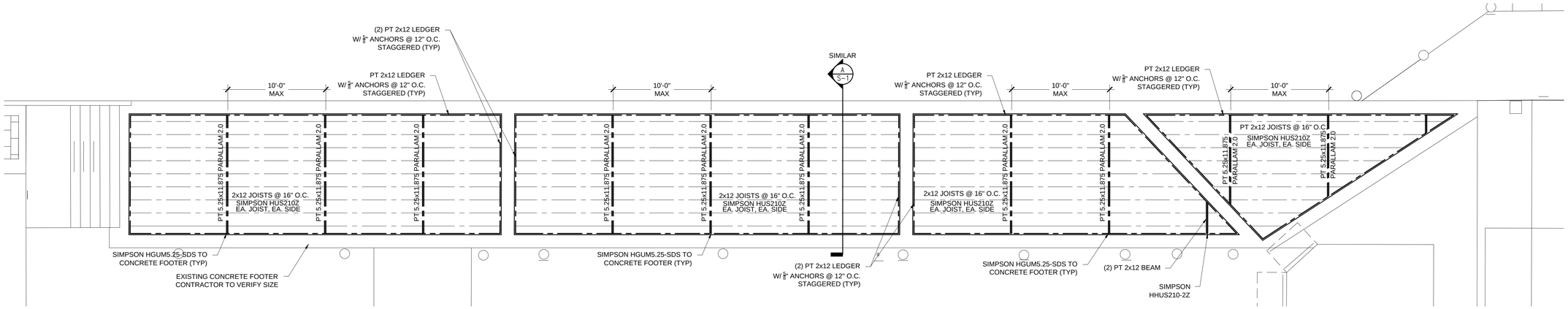

DECK FRAMING PLAN - AREA 1

SCALE: 3/16"=1'-0"

ALL FASTENERS TO BE STAINLESS STEEL

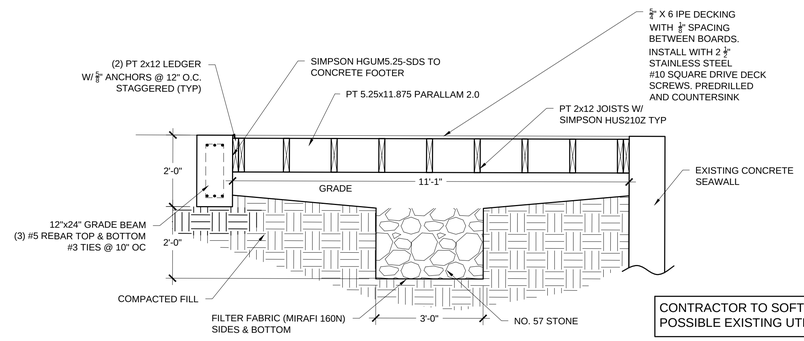

CONTRACTOR TO SOFT DIG FOR
POSSIBLE EXISTING UTILITIES

DECK SECTION

A
S-1

SCALE:1/2"=1'-0"

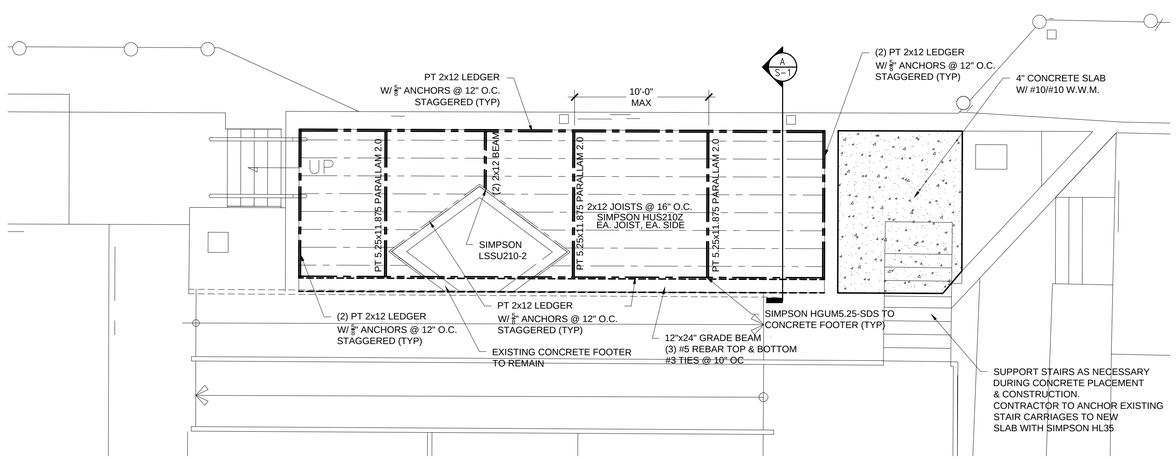

DECK FRAMING PLAN - AREA 3

SCALE: 3/16"=1'-0"

GENERAL STRUCTURAL NOTES

1. THESE PLANS ARE FOR THE WORK AT THE LOCATION SO DESIGNATED HEREIN.
2. THE CONTRACTOR SHALL PROVIDE ALL MATERIAL, LABOR, EQUIPMENT AND SUPERVISION NECESSARY TO PROVIDE THE WORK COMPLETE AND READY FOR USE.
3. THERE SHALL BE NO DEVIATION FROM THESE PLANS WITHOUT PRIOR APPROVAL FROM THE ENGINEER OF RECORD.
4. THE CONTRACTOR SHALL VISIT THE SITE AND BECOME FAMILIAR WITH EXISTING CONDITIONS BEFORE BID. CHECK AND VERIFY ALL DIMENSIONS AND CONDITIONS OF THE WORK SITE AND REPORT ANY DISCREPANCIES, DIFFERENCES OR CONDITIONS THAT ARE UNSATISFACTORY OR UNSAFE.
5. NOTIFY THE ENGINEER OF RECORD IMMEDIATELY OF ANY DISCREPANCIES, DIFFERENCES, UNSATISFACTORY OR UNSAFE CONDITIONS. ANY MODIFICATIONS OR CHANGES MADE WITHOUT PRIOR WRITTEN APPROVAL FROM THE OWNER AND ENGINEER OF RECORD SHALL NOT BE ALLOWED. ANY REWORK, RESTORATION OR OTHER IMPACT AS A RESULT OF NOT OBTAINING SUCH PRIOR APPROVAL WILL BE MADE BY THE CONTRACTOR WITHOUT ADDITIONAL COST OR COMPENSATION FROM THE OWNER.
6. THE CONTRACTOR SHALL PROVIDE FOR THE SAFETY, PREVENTION OF INJURY OR OTHER LOSS AT THE JOB TO ALL PERSONS EMPLOYED IN THE WORK, PERSONS VISITING THE WORK AND THE GENERAL PUBLIC. THE CONTRACTOR SHALL ALSO BE RESPONSIBLE FOR THE PREVENTION OF DAMAGE, DUE TO THE WORK, TO MATERIALS OR EQUIPMENT AND OTHER PROPERTY AT THE SITE OR ADJACENT THERETO.
7. NO RESEARCH AS TO THE PRESENCE OF UNDERGROUND UTILITIES HAS BEEN INCLUDED ON OR PERFORMED FOR THIS PROJECT. CONTRACTOR SHALL BE RESPONSIBLE FOR CALLING SUNSHINE UTILITY LOCATE SERVICE PRIOR TO ANY CONSTRUCTION WITHIN ANY PUBLIC RIGHT-OF-WAY OR OTHER AREAS WHERE UNDERGROUND UTILITIES MAY BE PRESENT (I.E. IN AND AROUND UTILITY EASEMENTS, ETC.)
8. THE GENERAL CONTRACTOR SHALL PROVIDE AN ON-SITE DUMPSTER IN A LOCATION COORDINATED WITH THE OWNER FOR THE DISPOSAL OF REMOVED MATERIAL AND CONSTRUCTION DEBRIS. THE DUMPSTER SHALL BE EMPTIED AT APPROPRIATE INTERVALS TO PREVENT OVERFLOW AND UNSIGHTLY CONDITIONS.
9. THE CONTRACTOR SHALL PERFORM ALL WORK IN STRICT CONFORMANCE WITH THE PLANS, 2010 FLORIDA BUILDING CODE, LOCAL CODES AND ORDINANCES, MANUFACTURER RECOMMENDATIONS AND ACCEPTABLE TRADE PRACTICES. ANY CONFLICT BETWEEN THESE REQUIREMENTS AND THE MOST STRINGENT REQUIREMENTS SHALL GOVERN THE WORK.
10. THE CONTRACTOR SHALL NOT SCALE DRAWINGS. ANY INFORMATION THAT THE CONTRACTOR CANNOT OBTAIN FROM DIMENSIONS, DETAIL OR SCHEDULE SHALL BE OBTAINED FROM THE ENGINEER OF RECORD.
11. THE CONTRACTOR SHALL COORDINATE THE WORK OF ALL TRADES TO PREVENT ANY CONFLICTS.
12. THE CONTRACTOR SHALL FURNISH ALL SUBCONTRACTORS WITH A COMPLETE SET OF PLANS. ALL CHANGES SHALL BE NOTED ON THE DRAWINGS AND (2) COMPLETE AS-BUILT SETS SHALL BE DELIVERED TO THE OWNER AFTER COMPLETION OF WORK.

FOUNDATION & CONCRETE NOTES

1. ALL FOOTINGS ARE TO BE PLACED ON FIRM, UNDISTURBED, NATURAL ROCK UNLESS OTHERWISE NOTED.
2. AUGER PILE DIAMETERS AND EMBEDMENT INTO ROCK SHALL BE NO LESS THAN 16" DIAMETER NOR LESS THAN 3' INTO ROCK WITH (4) 2'x4' #4 BENT BARS WITH SHORT LEG TIED TO #5'S AND LONG LEG EXTENDED INTO SLAB IN FOUR DIRECTIONS UNLESS OTHERWISE NOTED. CONCRETE SHALL NOT BE MIXED IN PLACE IN A WET AUGER HOLE.
3. CENTER ALL FOOTINGS UNDER WALLS, COLUMNS OR GRID LINES UNLESS OTHERWISE NOTED.
4. CONTRACTOR SHALL FURNISH FIELD DENSITY TESTS ON COMPACTED FILL UNDER FOOTINGS AND SLABS PRIOR TO PLACING CONCRETE. A MINIMUM OF 3 REPRESENTATIVE TESTS SHALL BE TAKEN FOR EACH FOOTING AND SLAB POUR.
5. ALL CAST-IN-PLACE CONCRETE SHALL BE MADE WITH TYPE I PORTLAND CEMENT, STONE AGGREGATE AND SHALL DEVELOP AT LEAST 4000 PSI COMPRESSIVE STRENGTH IN 28 DAYS. (UNLESS OTHERWISE NOTED.)
6. SLABS, TOPPING, FOOTINGS, BEAMS AND WALLS SHALL NOT HAVE JOINTS IN THE HORIZONTAL PLANE. ANY STOP IN CONCRETE WORK MUST BE MADE AT THE CENTER OF SPAN WITH VERTICAL BULKHEADS AND SHEAR KEYS, UNLESS OTHERWISE NOTED. ALL CONSTRUCTION JOINTS SHALL BE AS DETAILED OR OTHERWISE APPROVED BY THE ENGINEER.
7. ALL CONCRETE WORK AND REINFORCING DETAILS SHALL BE CONSTRUCTED IN ACCORDANCE WITH ACI 318. EXPOSED EDGES OF CONCRETE SHALL HAVE 1/2" CHAMFER. USE STANDARD HOOKS ON DOWELS UNLESS OTHERWISE NOTED.
8. CONCRETE FORMS SHALL BE WETTED IMMEDIATELY PRIOR TO PLACING CONCRETE.
9. MIXING, PLACING AND CURING OF ALL CONCRETE MUST BE IN ACCORDANCE WITH ACI 305R, HOT WEATHER CONCRETING. NEW CONCRETE EXPOSED TO DIRECT SUNLIGHT SHALL BE SPRAYED OR MOPPED WITH A CURING COMPOUND TO SEAL IN MOISTURE AFTER THE FINISH HAS SET, OR THE CONCRETE COVERED AND SPRAYED.
10. PROVIDE PLASTIC SLEEVES IN MASONRY PARTITIONS AND CONCRETE FOUNDATIONS AS INDICATED AND REQUIRED FOR UTILITY SERVICES. NO OTHER PIPE, CONDUIT OR ACCESSORY SHALL BE PLACED IN STRUCTURAL SLABS, COLUMNS OR BEAMS UNLESS SPECIFICALLY SHOWN ON STRUCTURAL DRAWINGS.
11. PROVIDE MASONRY FILLED CELL OR CONCRETE COLUMN WITH (1) #6 REBAR FROM BEAM TO BEAM ON BOTH SIDES OF ALL EXTERIOR OPENINGS.
12. ALL REINFORCING SHALL BE HIGH STRENGTH DEFORMED BARS CONFORMING TO ASTM A-615, GRADE 60.
13. WELDED WIRE FABRIC SHALL CONFORM TO ASTM A-185 AND SHALL BE LAPPED ONE FULL MESH AND AT SIDE AND END SPLICES AND WIRED TOGETHER.
14. REINFORCEMENT COVERAGE SHALL BE 2" MINIMUM WHEN FORMS ARE USED AND 3" MINIMUM WHEN POURED AGAINST THE EARTH, UNLESS OTHERWISE NOTED.
15. LAP SPLICES SHALL BE A MINIMUM OF 48 BAR DIAMETERS. MAKE ALL BARS CONTINUOUS AROUND CORNERS.
16. PROVIDE ALL ACCESSORIES NECESSARY TO SECURE REINFORCING IN PROPER POSITION AS INDICATED ON THE DRAWINGS AND IN ACCORDANCE WITH ACI 318. ALL ACCESSORIES TO BE GALVANIZED.
17. ALL UNIT MASONRY CONSTRUCTION AND DETAILS SHALL BE IN ACCORDANCE WITH ACI 530.
18. CONCRETE BLOCK SHALL CONFORM WITH ASTM C90. MORTAR SHALL BE TYPE S, ASTM C270.
19. ANCHOR BOLTS, NUTS AND WASHERS SHALL BE MINIMUM 1/2" DIAMETER AND EMBEDDED MINIMUM 5" INTO CONCRETE AND SPACED MAXIMUM 4' CC
20. MANUFACTURED STRAPS AND ANCHORS SHALL BE GALVANIZED AND SHALL BE FASTENED PER THE MANUFACTURER RECOMMENDATIONS. IN NO EVENT SHALL A STRUCTURAL MEMBER SUCH AS PIER, SILL, JOIST, PLATE, RAFTER OR TRUSS BE WITHOUT ANCHORAGE DEVICES FOR HURRICANE PROTECTION, UNLESS SPECIFICALLY NOTED AND ADDRESSED BY OTHER MEANS.

WOOD AND FRAMING NOTES

1. EXCEPT WHERE NOTED OTHERWISE, ALL FRAMING LUMBER SHALL BE SOUTHERN PINE, MC 19%, NO. 2 DENSE, AS GRADED BY THE SOUTHERN PINE INSPECTION BUREAU.
2. ALL TIMBER CONSTRUCTION SHALL CONFORM TO THE LATEST EDITION AFTC.
3. ALL WOOD SHALL BE PRESSURE TREATED WITH CHEMICALS TO PROTECT FROM INSECTS AND DECAY AS REQUIRED. ALLOW TO DRY AFTER TREATMENT. PROVIDE CONNECTORS AND FASTENERS COMPATIBLE WITH PRESSURE TREATED WOOD FRAMING. PROVIDE SEPARATION BARRIER SUCH AS BUILDING PAPER FOR NON-COMPATIBLE COMPONENTS SUCH AS ALUMINUM WINDOW FRAMES.
4. ALL WOOD CONNECTIONS SHALL HAVE SIMPSON STRONG-TIE CO. OR EQUAL CONNECTORS. ALL CONNECTORS SHALL BE INSTALLED WITH MANUFACTURER RECOMMENDED FASTENERS BEFORE LOADING.
5. CUTTING AND NOTCHING OF FLOOR JOISTS SHALL CONFORM TO THE FOLLOWING:
   A. NOTCH DEPTH IN THE TOP OR BOTTOM OF THE JOISTS AND BEAMS SHALL NOT EXCEED ONE-SIXTH OF THE DEPTH OF THE MEMBER AND SHALL NOT BE LOCATED IN THE MIDDLE ONE-THIRD OF THE SPAN. (INCLUDING BIRDS MOUTH CUTS).
   B. NOTCH DEPTH AT THE ENDS OF THE MEMBER SHALL NOT EXCEED ONE-FOURTH THE DEPTH OF THE MEMBER.
   C. THE TENSION SIDE OF BEAMS, JOISTS AND RAFTERS OF FOUR INCHES OR GREATER NOMINAL THICKNESS SHALL NOT BE NOTCHED, EXCEPT AT ENDS OF MEMBERS.
   D. HOLES BORED OR CUT INTO JOISTS SHALL NOT BE CLOSER THAN TWO INCHES TO THE TOP OF BOTTOM OF THE JOISTS. THE DIAMETER OF THE HOLE SHALL NOT EXCEED ONE-THIRD THE MEMBER DEPTH.
6. PROVIDE FULL DEPTH BLOCKING BETWEEN ALL JOISTS 2 X 6 OR GREATER AT INTERVALS NOT TO EXCEED 8 FEET AND AT ALL SUPPORTS.
7. WHERE WOOD JOISTS/BEAMS ETC. FRAME INTO OTHER MEMBERS INSTALL SIMPSON "HUS" SERIES GALVANIZED JOIST HANGERS.

KEY WEST HISTORIC SEAPORT
PHASE I
KEY WEST, FLORIDA

WILLIAM P. HORN
ARCHITECT , P.A.

915 EATON ST.
KEY WEST,
FLORIDA
33040

TEL (305) 296-8302
FAX (305) 296-1033

LICENSE NO.
AA 0003040

PEREZ ENGINEERING
& DEVELOPMENT, INC
CERTIFICATE OF AUTHORIZATION NO. 8579
KEY WEST OFFICE
1010 EAST KENNEDY DRIVE, SUITE 201
KEY WEST, FLORIDA 33040
TEL: (305) 293-9440 FAX: (305) 294-0243

KEY WEST
HISTORIC
SEA PORT
PHASE I

KEY WEST BIGHT
KEY WEST, FL. 33040

SEAL
ALLEN E. PEREZ, P.E.
P.E. #51468

DECK
FRAMING
PLAN

THESE DRAWINGS MAY
NOT BE REPRODUCED
WITHOUT WRITTEN
AUTHORIZATION BY
WILLIAM P. HORN

DATE
02-25-14
06-19-14 HARC
01-12-15 BID

REVISIONS

DRAWN BY
OCE
FH
EMA

PROJECT
NUMBER
1226

S-1

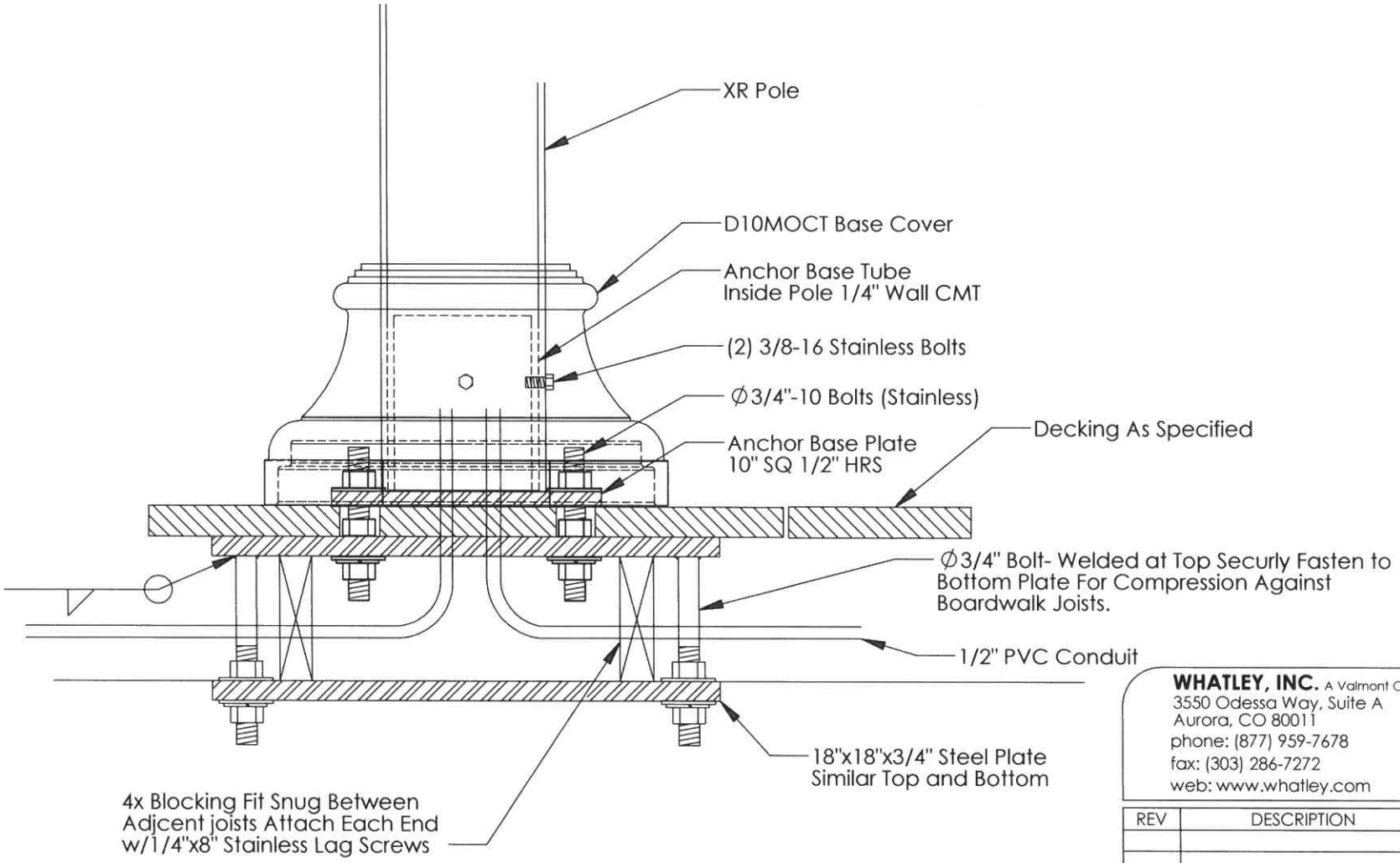

WHATLEY, INC. A Valmont Company
3550 Odessa Way, Suite A
Aurora, CO 80011
phone: (877) 959-7678
fax: (303) 286-7272
web: www.whatley.com

REV	DESCRIPTION	DATE

PART NO.	REV.

DESCRIPTION: Mounting Detail

pg. 7 of 7

SCALE: 1:50

SIZE: A

DO NOT SCALE DRAWING

DOCUMENTATION	INITIAL	DATE
DRAWN	JTC	4/5/11
QUOTE REQUEST		
TOOLING REQUEST		
FIRST ARTICLE REQUEST		
FIRST ARTICLE INSPECTION		
PRODUCTION RELEASE		

UNLESS OTHERWISE NOTED:

DIMENSIONS ARE IN INCHES

TOLERANCES:
DECIMAL .XX ± .03
DECIMAL .XXX± .010
ANGLE ± 1/2

PROPRIETARY AND CONFIDENTIAL
THE INFORMATION CONTAINED IN THIS DRAWING IS THE SOLE PROPERTY OF WHATLEY, INC. ANY REPRODUCTION IN PART OR AS A WHOLE WITHOUT THE WRITTEN PERMISSION OF WHATLEY, INC. IS PROHIBITED.

GROUND PREPARATION

When choosing a location for a meter, there are several factors to consider.

- Picture the area full of traffic and normal congestion:
- Is there adequate room for customers to gain access to the meter?
- Does the position block a business doorway or access area?
- Is the meter in danger of being hit by traffic? If yes protective bollards may be needed

There are also several factors to consider when installing the Cale parking terminals.

- The meter should be positioned, if possible, to make the best possible use of sunlight to charge the battery.
- Cale meters are bigger than the template or base anchor. Make sure enough room is given in all directions for proper mounting.
- Cale meters needs to be mounted in a level position for proper operation.
- The surrounding concrete area should be in good condition.
- When installing on a median strip or near a curb, make sure the added height does not cause an inconvenience for customers using the meter.
- If using lag inserts, the concrete must be at least 4” deep and in good overall condition.
- The meter weighs approximately 200 lbs depending on configuration. Take adequate precautions when moving or mounting the meter.

The two most common mounting methods are base anchors and lag inserts.

A. Base Anchors

- The base anchor is designed for use in new concrete. The minimum concrete slab should be 28”w x 24” (front to back) by 10” deep.
- The anchor should be installed so that the metal top is completely level. The concrete must not be higher than the top surface of the anchor at any point within 4” of the edges of the anchor.
- If the surrounding area is not level, the concrete must be brought up to level,
- If an AC line or network connection will be made, it should be routed up through the center cutout on the anchor using a conduit.

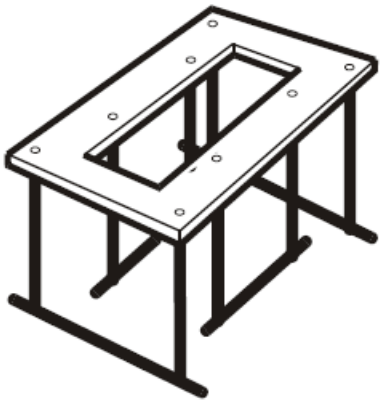

Base anchor 0403-B0120

B. Template / Lag Inserts *** DO NOT INSTALL THE LAG INSERTS INTO THE GROUND ***

If you are mounting in existing concrete, you will be sent templates in order to pre-drill the holes needed for installation.

1. Place the template on the ground in the correct position. The front of the meter will be flush with the template. The back will stick out approximately 3” beyond the back of the template.
2. Stand on the template to keep it in position.
3. Using a ½” masonry drill, drill at each hole location on the template, deep enough to clearly mark the position of the hole in the concrete.
4. Remove the template and drill pilot holes ½” by 3” deep.
5. Using a 5/8” drill bit, re-drill the back corner holes to the proper size.
6. Using a ¾” drill bit, re-drill the remaining 6 holes to the correct size.

Installing the Meter yourself:

7. Apply epoxy to the Lag Inserts and insert them into the correct size hole, one at a time. Do not push the lag insert too far into the hole. The top of the Lag Insert should be level with the concrete.
8. Dry fit the meter. Check the level of the meter. Install washer shims on the necessary corners to level the meter**. Failure to level the meter can result in operational problems**
9. Bolt down the meter. Tighten down all 6 of the big size bolts, then tighten the two smaller size bolts in the back corners.
10. Check the level of the meter once all of the bolts are tightened down. The meter may move once torque down. If the meter is off level remove all of the bolts and repeat steps 8-10.

OR:

A technician will be installing the meter:

Perform steps 1-6 prior to installation technician's arrival.
Mounting hardware will be shipped with your meters. Please hold all of the mounting hardware for the technician. PLEASE DO NOT INSTALL THE LAG INSERTS INTO THE GROUND**.** The installation technician will need to apply epoxy to the lag inserts before installing them into the ground. Failure to apply the epoxy before installing the lag inserts into the ground will cause a lengthy delay.

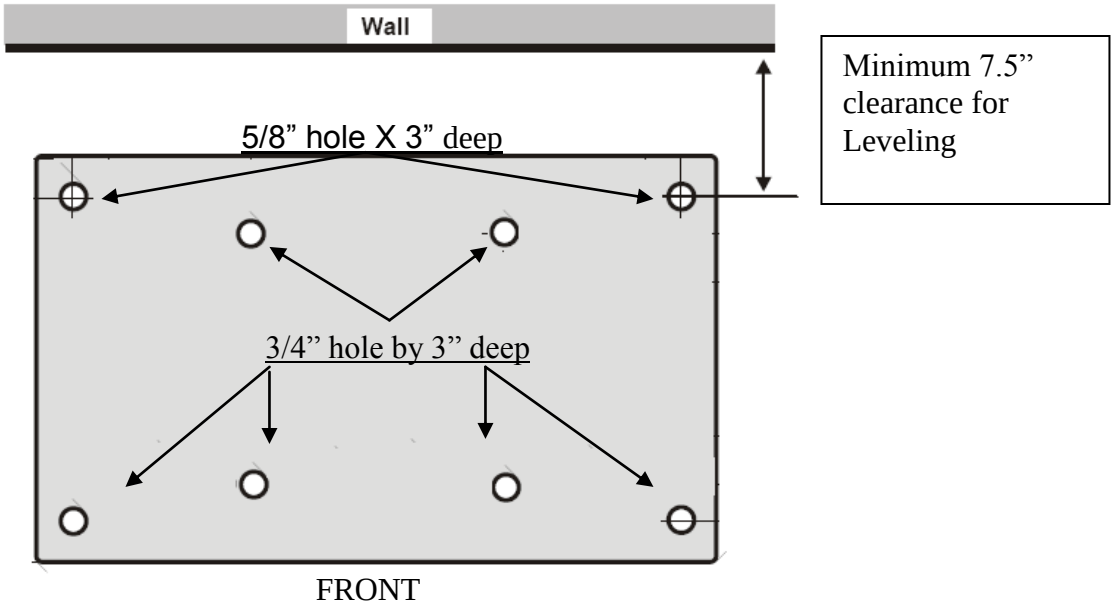

TRIO™ BIKE RACK

PRODUCT DATA

FORMS+SURFACES®

TRIO™ BIKE RACK

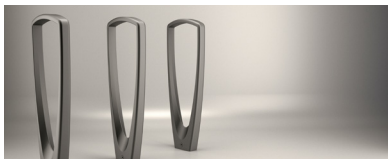

PRODUCT DATA

The **Trio Bike Rack** is the perfect complement to our Trio product line. Providing an excellent opportunity for design continuity, the Trio Bike Rack draws on the same triangular shape and exaggerated void seen in both our Trio Bench and Trio Lighting. Contemporary in design, its simple yet sculptural form allows it to be integrated into a myriad of settings.

MATERIAL & FINISHES

MATERIAL	FINISHES
• Body is made of corrosion-resistant cast aluminum with powdercoat finish.	• Standard colors are Aluminum Texture and Slate Texture; optional colors from the F+S color chart and custom RAL colors are available for an upcharge. • Due to the inherent nature of metal castings, gloss powdercoats are not offered for cast components.

INSTALLATION & MAINTENANCE

INSTALLATION	MAINTENANCE
• Trio Bike Racks must be surface mounted. Anchors and stainless steel screws are included.	• Metal surfaces can be cleaned as needed using a soft cloth or brush with warm water and a mild detergent. Avoid abrasive cleaners.

NOMINAL DIMENSIONS

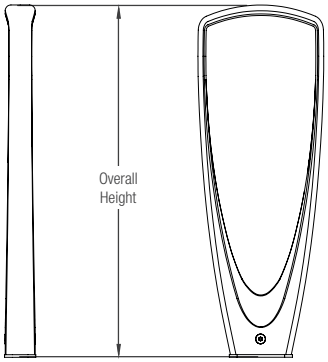

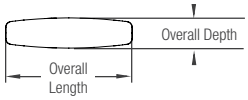

OVERALL LENGTH	OVERALL DEPTH	OVERALL HEIGHT	WEIGHT
12" (305 mm)	2.75" (70 mm)	33.5" (851 mm)	24 lbs (10.9 kg)

ENVIRONMENTAL CONSIDERATIONS

- Please refer to the Trio Bike Rack Environmental Data Sheets for detailed environmental impact information.
- Trio aluminum casting has up to 95% recycled content and is fully recyclable.
- Standard powdercoat finishes are no-VOC; non-standard powdercoat finishes are no- or low-VOC, depending on color.
- Low maintenance.

NET PRICING AND ORDERING INFORMATION (pricing does not include freight)

MODEL	DESCRIPTION	NET PRICE
SKTRO	Trio Bike Rack	$399
	Optional powdercoat color from Forms+Surfaces standard color chart	+ $200 per color/per order
	Custom RAL powdercoat color	+ min. $500 per color/per order

TO ORDER SPECIFY: quantity, model and powdercoat color for body casting.

LEAD TIME: 6 to 8 weeks. Shorter lead times may be available upon request. Please contact us to discuss your specific timing requirements.

T 800.451.0410 | www.forms-surfaces.com

FORMS+SURFACES®

© 2012 Forms+Surfaces® | All dimensions are nominal. Specifications and pricing subject to change without notice. For the most current version of this document, please refer to our website at www.forms-surfaces.com.

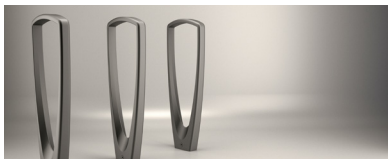

CONFIGURATION OPTIONS

The Trio Bike Rack was designed to allow for a multitude of configuration options to meet your individual needs. Please note that for optimal performance, Forms+Surfaces recommends a 30" center to center placement (see diagrams below for more details).

SIDE DETAIL

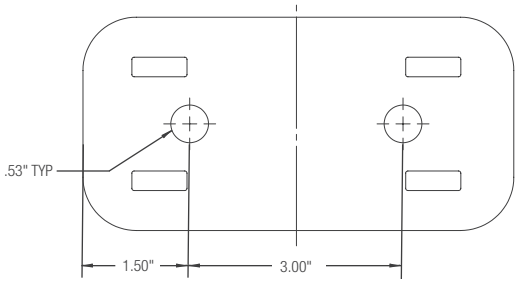

MOUNTING / HARDWARE DETAIL

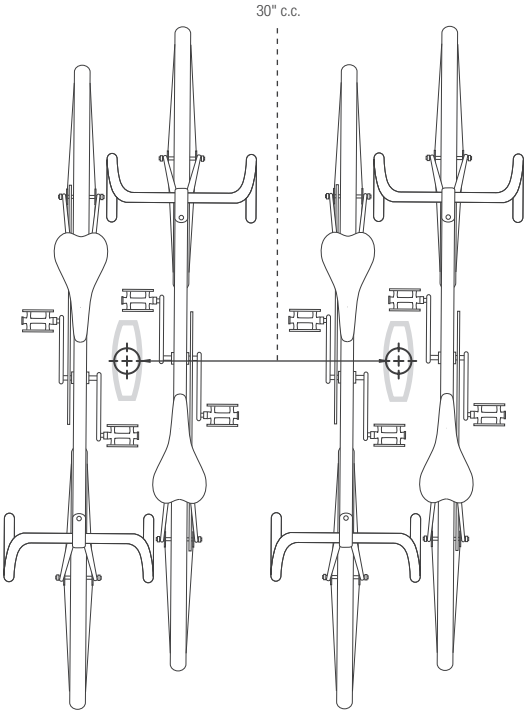

CONFIGURATION OPTION A

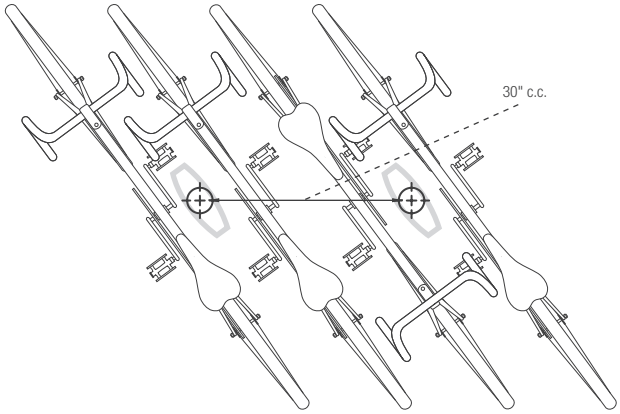

CONFIGURATION OPTION B

© 2012 Forms+Surfaces® | All dimensions are nominal. Specifications and pricing subject to change without notice. For the most current version of this document, please refer to our website at www.forms-surfaces.com.

KWHS Common Area Enhancements – Phase 1
ITB #15-004
MANDATORY PRE-BID SIGN-IN SHEET

February 11, 2015
2:30 PM

NAME / COMPANY	CONTACT #	EMAIL
Tim Root Patricia Neyra Mingo + Co.	305-293-0442	Tim@mingoandcollc.com Patty@mingoandcollc.com
Doug Masch DEC Contracting Group, Inc.	239.332.4322	Doug@DECcontracting.com
Bryan Wolfe Barracuda Builders	747-4637	info@barracudabuilders.com
William Hunt McCarthy, PA	296-8302	wpahm@aol.com
Ken Bygler Pedro Falcon	305-872-2200 Ext 28	ken@pedrofalcon.com
Robert Blanchard D.L. Porter Constructors	941-929-9400	mwhite@dlporter.com
Alex Perez Perez Engineering	(305) 293-9440	aperez@perezeng.com
Andrew Toppino Charley Toppino + Sons	305-797-5834	AJToppino@gmail.com
Paul R Waters DNHI	305-792-1019	Paulw@dnhiggins.com