CONTRACT DOCUMENTS FOR:

RIGHT-OF-WAY IMPROVEMENTS 2015

ITB 15 - 006

FEBRUARY 2015

MAYOR: CRAIG CATES

COMMISSIONERS:

TERRI JOHNSTON

BILLY WARDLOW

JIMMY WEEKLEY

MARK ROSSI

CLAYTON LOPEZ

TONY YANIZ

PREPARED BY:
ENGINEERING SERVICES

COPY NO: _____

CONTRACT DOCUMENTS

For

RIGHT-OF- WAY IMPROVEMENTS 2015

ITB 15-006

KEY WEST, FLORIDA

****

Consisting of:
Bidding Requirements
Contract Forms
Conditions of the Contract
Specifications
Details

****

The City Of Key West
Engineering Services
3126 Flagler Avenue
Key West, Florida
33040

FEBRUARY 2015

TABLE OF CONTENTS

PART 1 BIDDING REQUIREMENTS **PAGE NO.**

INVITATION TO BID 1
INSTRUCTIONS TO BIDDERS 3
PROPOSAL BID FORM 9
FLORIDA BID BOND 19
PUBLIC ENTITY CRIMES FORM 21
ANTI-KICKBACK AFFIDAVIT 23
CITY OF KEY WEST INDEMNIFICATION 24
LOCAL VENDORS 25
DOMESTIC PARTNERSHIP AFFIDAVIT 26
CONE OF SILENCE 27
BIDDER'S CHECKLIST 28

PART 2 CONTRACT FORMS

CONTRACT 30
FLORIDA PERFORMANCE BOND 32
FLORIDA PAYMENT BOND 34

PART 3 CONDITIONS OF THE CONTRACT

GENERAL CONDITIONS 36
SUPPLEMENTARY CONDITIONS 57

PART 4 TECHNICAL SPECIFICATIONS

01001 GENERAL REQUIREMENTS 74
01010 SUMMARY OF WORK 82
01014 ENVIRONMENTAL PROTECTION 85
01025 MEASUREMENT & PAYMENT 87
01050 FIELD ENGINEERING 92
01300 SUBMITTALS 94
01390 PRECONSTRUCTION VIDEO 96
01005 TESTING SERVICES 97
01500 BARRIERS 99
01700 CONTRACT CLOSEOUT 101

PART 5 SITE WORK

02221 FAILED TRENCH RESTORATION 105
02555 ASPHALT CONCRETE PAVEMENT 111
02575 SURFACE RESTORATION 118
02731 ROADWAY SIGNS 127
03002 CONCRETE CURBS, CONC. PLACEMENT, AND SIDEWALKS 130
03240 SYNTHETIC FIBER REINFORCEMENT 137

PART 6 DETAILS

SEEPAGE TRENCH 141
TRENCH RESTORATION 142
SWALE RESTORATION 143

PART 1

BIDDING REQUIREMENTS

INVITATION TO BID

Sealed bids for RIGHT-OF- WAY IMPROVEMENTS 2015 / ITB 15-006 addressed to the City of Key West, will be received at the Office of the City Clerk, 3126 Flagler Avenue St., Key West Florida, until 3:00 p.m., local time, on the 11th day of MARCH 2015, and then will be publicly opened and read. Any bids received after the time and date specified will not be considered.

Please submit ONE (1) ORIGINAL and TWO (2) USB drives each with a single file of the entire bid proposal package. Bid package shall be enclosed in a sealed envelope clearly marked on the outside "ITB 15-006: RIGHT-OF-WAY IMPROVEMENTS"; addressed and delivered to the City Clerk's office at the address noted above.

The City retains the right to award bid to the bidder that best meet the needs of the City.

The Project contemplated consists of work within the City's rights -of -ways including asphalt paving, sidewalk construction and shoulder restoration required for the and other similar items as directed by the City.

Drawings and Specifications may be obtained from Demand Star by Onvia. Please contact Demand Star at www.demandstar.com or call 1-800-711- 1712.Also available on the City's website at www.cityofkeywest-fl.gov

The successful Bidder will be required to furnish the necessary additional bond(s) for the faithful performance of the Contract, as Prescribed in the Bidding Documents. Within 10 days after the Notice of Award, the successful Bidder will also be required to furnish documentation showing that he is in compliance with the licensing requirements of the state and that the Provisions of Chapter 66 of the Code of Ordinances of the City of Key West. Compliance with these Provisions is required before the Contractor can enter into the agreement contained in the Contract Documents.

EACH BID MUST BE SUBMITTED ON THE PRESCRIBED FORM AND ACCOMPANIED BY BID SECURITY AS PRESCRIBED IN THE INSTRUCTIONS TO BIDDERS, PAYABLE TO THE CITY OF KEY WEST, FLORIDA, IN AN AMOUNT NOT LESS THAN FIVE (5) PERCENT OF THE AMOUNT BID.

THE BIDDER MUST BE A LICENSED CONTRACTOR BY THE STATE OF FLORIDA AND SUBMIT PROOF OF SUCH WITH THE BID.

The Bidder shall furnish documentation showing that he is in compliance with the licensing requirements of the provisions of Chapter 66 Section 87 of the Code of Ordinances of the City of Key West; within 10 days the following the Notice of Award and must demonstrate that he holds at a minimum, the following licenses & certificates;

A. City of Key West Business Tax License Receipt
B. A valid Certificate of Competency issued by the Chief Building Official of Key West, Florida.

All bid bonds, contract bonds, insurance contracts, and certificates of insurance shall be either executed by or countersigned by a licensed resident agent of the Surety or Insurance Company having his place of business in the State of Florida, and in all ways complying with the insurance laws of the State of

Florida. Further, the said Surety or Insurance Company shall be duly licensed and qualified to do business in the State of Florida.

Before a Contract will be awarded for the work contemplated herein, the OWNER will conduct such investigation as is necessary to determine the performance record and ability of the apparent low Bidder to perform the size and type of work specified under this Contract. Upon request, the Bidder shall submit such information as deemed necessary by the OWNER to evaluate the Bidder's qualifications.

At the time of the award, the successful Bidder must show satisfactory document of such State, County, and City licenses as would be required. Any permit and/or license requirement and subsequent costs are located within the bid documents. The successful Bidder must also be able to satisfy the City Attorney as to such insurance coverage and legal requirements as may be demanded by the Bid in question. The City may reject bids for any and/or all of the following reasons: (1) for budgetary reasons, (2) if the bidder misstates or conceals a material fact in its bid, (3) if the bid does not strictly conform to the law or is non-responsive to the bid requirements, (4) if the bid is conditional, or (5) if a change of circumstances occurs making the purpose of the bid unnecessary to the City. The City may also waive any minor formalities or irregularities in any bid.

Dated this _____ day of _____, 2015.

CITY OF KEY WEST

By_____
Jim Scholl, City Manager

INSTRUCTIONS TO BIDDERS

1. CONTRACT DOCUMENTS

A. FORMAT

The Contract Documents are divided into parts, divisions, and sections for convenient organization and reference. Generally, there has been no attempt to divide the Specification sections into work performed by the various building trades, work by separate subcontractors, or work required for separate facilities in the Project.

B. DOCUMENT INTERPRETATION

The separate sections contained within these Contract Documents are intended to be mutually cooperative and to provide all details reasonably required for the execution of the proposed work.

Should there be any doubt as to the meaning or intent of said Contract Documents, the Bidder should request of the Engineer, in writing (at least eight (8) calendar days Prior to the Bid opening) an interpretation thereof. Any interpretation or change in said Contact Documents will be made only in writing, in the form of addenda to the Documents which will be furnished to all registered holders of Bidding Documents. Bidders shall submit with their PROPOSALS, or indicate receipt of, all Addenda. The Owner will not be responsible for any other explanation or interpretations of said Documents.

2. GENERAL DESCRIPTION OF THE PROJECT

A general description of the work to be done is contained in the Invitation to Bid and the scope is specified in applicable parts of these Contract Documents.

3. QUALIFICATION OF CONTRACTORS

The Prospective Bidders must meet the statutorily prescribed requirements before award of the Contract by the Owner.

4. BIDDER'S UNDERSTANDING

Each Bidder must inform himself of the conditions relating to the execution of the work and make himself thoroughly familiar with all the Contract Documents. Failure to do so will not relieve the successful Bidder of his obligation to enter into a Contract and complete the contemplated work in strict accordance with the Contract Documents. Each Bidder shall inform himself of, and the Bidder awarded a Contract shall comply with, federal, state, and local laws, statutes, and ordinances relative to the execution of the work. This requirement includes, but is not limited to, applicable regulations concerning minimum wage rates, nondiscrimination in the employment of labor, protection of public and employee safety and health, environmental protection, the protection of natural resources, fire protection, burning and non-burning requirements, permits, fees, and similar subjects.

5. TYPE OF PROPOSAL

A. UNIT PRICE

The proposal for the work is to be submitted on a Unit Price basis. Unit prices shall be submitted in all appropriate places in the Bid Proposal Form.

6. PREPARATION OF PROPOSALS

A. GENERAL

All blank spaces in the Proposal form must be filled in, as required, in BLACK INK. All Price information will be shown in both words and figures where required. No changes shall be made in the phraseology of the forms. Written amounts shall govern in case of discrepancy between amounts stated in writing and the amounts stated in figures.

Any Proposal shall be deemed informal which contains omissions erasures, alterations, or additions of any kind, or Prices uncalled for, or in which any of the Prices are obviously unbalanced, or which in any manner shall fail to conform to the conditions of the published Invitation to Bid.

Only one Proposal from any individual, firm, partnership, or corporation under the same or different names, will be considered. Should it appear to the Owner that any Bidder is interested in more than one Proposal for work contemplated, all Proposals in which such Bidder is interested will be rejected.

B. SIGNATURE

The Bidder shall sign his Proposal in the blank space provided therefore. If Bidder is a corporation, the legal name of the corporation shall be set forth above, together with the signature of the officer or officers authorized to sign Contracts on behalf of the corporation. If the Bidder is a partnership, the true name of the firm shall be set forth above, together with the signature of the partner or partners authorized to sign Contracts on behalf of the partnership. If signature is by an agent, other than an officer of a corporation or a member of a partnership, a notarized power of attorney must be on file with the Owner Prior to opening of Proposals or submitted with the Proposal, otherwise the Proposal will be regarded as not properly authorized.

C. SPECIAL BIDDING REQUIREMENTS

The Bidder's attention is brought to the hiring Practices and licenses and permits of the City of Key West. These are defined in the addition to Article 38, ORDINANCES, PERMITS, AND LICENSES, as set forth in the Supplementary Conditions.

The Bidder shall submit with his Bid his experience record showing their experience and expertise in right-of-way improvement work. Such experience record shall provide at least ten (10) current or recent Projects of similar work, preferably within Florida or the

Southeastern United States. For each Project the following information will be provided:

1. Description and location of work
2. Contract amount
3. Dates work was performed
4. Owner
5. Name of Owner's contact person and phone number

D. ATTACHMENTS

Bidder shall complete and submit the following forms with his Bid:

Anti-Kickback Affidavit
Public Entity Crime Form
Key West Insurance Form
Local Vendors Certification
Domestic Partnership Affidavit
Cone of Silence

7. STATE AND LOCAL SALES AND USE TAX

Unless the Supplementary Conditions contains a statement that the Owner is exempt from state sales tax on materials incorporated into the work due to the qualification of the work under this Contract, the Contractor, as required by the laws and statutes of the state and its political subdivisions, shall pay all state and local sales and use taxes. Prices quoted in the Proposal shall include all nonexempt sales and use taxes, unless Provision is made in the Proposal form to separately itemize the tax.

8. SUBMISSION OF PROPOSALS

All Proposals must be submitted not later than the time Prescribed, at the place, and in the manner set forth in the Invitation to Bid. Proposals must be made on the Proposal forms provided herewith and submitted intact with the volume containing the Bidding requirements, Contract forms, and Conditions of the Contract.

Each Proposal must be submitted in a sealed envelope, so marked as to indicate the Bidder's name and its contents without being opened, and addressed in conformance with the instructions in the Invitation to Bid .

9. MODIFICATION OR WITHDRAWAL OF PROPOSALS

Prior to the time and date designated for receipt of Proposals, any Proposal submitted may be modified or withdrawn by notice to the party receiving Proposals at the place designated for the receipt of Proposals. Such notice shall be in writing over the signature of the Bidder or by email. If by email, written confirmation over the signature of the Bidder shall be mailed and postmarked on or before the date and time set for receipt of Proposals, and it shall be so worded as not to reveal the amount of the original Proposal. No Proposal may be withdrawn after the time

scheduled for the opening of Proposals, unless the time specified in paragraph AWARD OF CONTRACT of these Instructions to Bidders shall have elapsed.

10. BID SECURITY

Proposals must be accompanied by cash, a certified check drawn on a bank in good standing, or a Bid Bond issued by a Surety authorized to issue such bonds in the state where the work is located, in the amount of five (5) percent of the total amount of the Proposal submitted. This Bid security shall be given as a guarantee that the Bidder will not withdraw his Proposal for a period of Sixty (60) days after Bid opening, and that if awarded the Contract, the successful Bidder will execute the attached Contract within the time specified.

The attorney-in-Fact who executes this bond in behalf of the Surety must attach a notarized copy of his power-of-attorney as evidence of his authority to bind the Surety on the date of the execution of the bond. Where State Statute requires, certification by a resident agent shall also be provided.

If the Bidder elects to furnish a Bid Bond, he shall use the Bid Bond form bound herewith, or one conforming substantially thereto in form and content.

11. RETURN OF BID SECURITY

Within fifteen (15) days after the award of the Contract, the Owner will return the Bid securities to all Bidders whose Proposals are not to be further considered in awarding the Contract. Retained Bid securities will be held until the Contract has been finally executed, after which all Bid securities, other than Bidder's Bonds and any guarantees which have been forfeited, will be returned to the respective Bidders whose Proposals they accompanied.

12. AWARD OF CONTRACT

Within forty-five (45) calendar days after the opening of the Proposals, the Owner will accept one of the Proposals or will act in accordance with the following paragraphs. The acceptance of the Proposal will be by written notice of award, mailed to the office designated in the Proposal, or delivered to the Bidder's representative. In the event of failure of the lowest responsive Bidder to sign the Contract and provide acceptable insurance certificate(s), the Owner may award the Contract to the next lowest, responsive, responsible Bidder. Such award, if made, will be made within sixty (60) days after the opening of the Proposals.

The Owner reserves the right to accept or reject any and all Proposals, and to waive any informalities and irregularities in said Proposals.

13. BASIS OF AWARD

The award will be made by the Owner on the basis of that Proposal from the lowest responsive, responsible Bidder, which in the Owner's sole and absolute judgment, will serve the best interests of the Owner.

The Owner reserves the right to accept or reject any or all Proposals and to waive any informalities and irregularities in said Proposals.

If at the time this Contract is to be awarded, the total of the lowest acceptable Proposal exceeds the funds then estimated by the Owner as available, the Owner may reject all Proposals or take such other action as best serves the Owner's interest.

14. EXECUTION OF CONTRACT

The successful Bidder shall, within ten (10) working days after receiving notice of award, sign and deliver to the Owner a Contract in the form hereto attached together with the acceptable insurance certificates as required in these Documents. Within ten (10) working days after receiving the signed Contract, with acceptable insurance from the successful Bidder, the Owner's authorized agent will sign the Contract. Signature by both parties constitutes execution of the Contract.

15. CONTRACT BONDS

A. PERFORMANCE AND PAYMENT BONDS

The successful Bidder shall file with the Owner, at the time of delivery of the signed Contract, and a Performance Bond and Payment Bond on the forms bound herewith, each in the full amount of the Contract Price in accordance with the requirements of Florida Statutes Section 255.05 or 713.23, as applicable, as security for the faithful performance of the Contract and the payment of all persons supplying labor and materials for the construction of the work, and to cover all guarantees against defective workmanship or materials, or both, during the warranty period following the date of final acceptance of the work by the Owner. The Surety furnishing this bond shall have a sound financial standing and a record of service satisfactory to the Owner, shall be authorized to do business in the State of Florida, and shall be listed on the current U.S. Department of Treasury Circular Number 570, or amendments thereto in the Federal Register, of acceptable Sureties for federal Projects. Section 255.05(7), Florida Statutes, in lieu of the bond required by law, the contractor may file with the city an alternative form of security in the form of cash, a money order, a certified check, a cashier’s check or an irrevocable letter of credit.

B. POWER-OF-ATTORNEY

The Attorney-in-Fact (Resident Agent) who executes this Performance and Payment Bond in behalf of the Surety must attach a notarized copy of his power-of-attorney as evidence of his authority to bind the Surety on the date of execution of the bond.
All Contracts, Performance and Payment Bonds, and respective powers-of-attorney will have the same date.

16. FAILURE TO EXECUTE CONTRACT AND FURNISH BOND

The Bidder who has a Contract awarded to him and who fails to Promptly and Properly execute the Contract or furnish the required Bonds shall forfeit the bid security that accompanied his bid, and the

bid security shall be retained as liquidated damages by the Owner, and it is agreed that this said sum is a fair estimate of the amount of damages the Owner will sustain in case the Bidder fails to enter into a Contract or furnish the required Bonds. Bid security deposited in the form of cash, a certified check, or cashier's check shall be subject to the same requirement as a Bid Bond.

17. PERFORMANCE OF WORK BY CONTRACTOR

The Contractor shall perform on site and with his own organization, labor equivalent to at least forty (40) percent of the total amount of the work to be performed under this Contract. If, during the Progress of the work hereunder, the Contractor requests a reduction of such percentage, and the Engineer determines that it would be to the client's advantage, the percentage of labor to be performed by the Contractor's own organization may be reduced; provided prior written approval of such reduction is obtained by the Contractor from the Engineer.

18. TIME OF COMPLETION

The time of completion of the work to be performed under this Contract is the essence of the Contract. Delays and extensions of time may be allowed in accordance with the Provisions stated in the General Conditions. Work Orders will be issued as a means to track time & materials for work performed in the referenced right-of way. A time estimate for the completion of each work order will be stated in that particular Work Order; when the Contractor receives a Work Order, work shall commence as soon as possible and all work shall be completed within the number of calendar days stipulated in that particular Work Order.

Should the Contractor disagree with the time of completion for a specific Work Order, he shall, within five calendar days of the receipt of the Work Order, make a written claim to the Engineer and Owner for an extension in the time of completion. If, in the opinion of the Engineer, the Contractor presents sufficient evidence to justify the claim, an extension in the time of completion will be allowed for the period determined by the Engineer.

Should a Work Order extend past the one (1) year contract period for unforeseen reasons the work shall be automatically extended to the date of completion not to exceed 60 days.

NOTE TO BIDDER: Use Preferably BLACK ink for completing this Proposal form.

PROPOSAL

To: The City of Key West, Florida

Address: 3126 Flagler Avenue
Key West, Florida 33040

Project Title: RIGHT-OF- WAY IMPROVEMENTS 2015

Project No.: ITB 15-006

Bidder's person to contact for additional information on this Proposal:

Name: _____

Telephone: _____

E mail: _____

BIDDER'S DECLARATION AND UNDERSTANDING

The undersigned, hereinafter called the Bidder, declares that the only persons or parties interested in this Proposal are those named herein, that this Proposal is, in all respects, fair and without fraud, that it is made without collusion with any official of the Owner, and that the Proposal is made without any connection or collusion with any person submitting another Proposal on this Contract.

The Bidder further declares that he has carefully examined the Contract Documents for the construction of the Project, that he has satisfied himself as to the work involved, including materials and equipment, and conditions of work, including the fact that the description of the quantities of work and materials, as included herein, is brief and is intended only to indicate the general nature of the work and to identify the said quantities with the detailed requirements of the Contract Documents, and that this Proposal is made according to the Provisions and under the terms of the Contract Documents, which Documents are hereby made a part of this Proposal.

The Bidder further agrees that he has exercised his own judgment regarding the interpretation of subsurface information and has utilized all data which he believes pertinent from the Engineer, Owner, and other sources in arriving at his conclusions.

The Bidder further agrees, as evidenced by signing the Proposal that if awarded a Contract, the Florida Trench Safety Act and applicable trench safety standards will be complied with.

CONTRACT EXECUTION AND BONDS

The Bidder agrees that if this Proposal is accepted, he will, within 10 days, not including Sundays and legal holidays, after Notice of Award, sign the Contract in the form annexed hereto, and will at that time, deliver to the Owner examples of the Performance Bond and Payment Bond required herein, and evidence of holding required licenses and certificates, and will, to the extent of his Proposal, furnish all machinery, tool, apparatus, and other means of construction and do the work and furnish all the materials necessary to complete all work as specified or indicated in the Contract Documents.

CERTIFICATES OF INSURANCE

Bidder agrees to furnish the Owner, before commencing the work under this Contract, the certificates of insurance as specified in these Documents.

START OF CONSTRUCTION AND CONTRACT COMPLETION TIME

The Bidder further agrees to begin work within 10 calendar days after the date of the Notice to Proceed to complete the construction, in all respects, within the number of calendar days set forth in each Work Order.

This Contract will automatically expire and be terminated 1 year after the date of the execution of the Contract by the Owner.

LIQUIDATED DAMAGES

In the event the Bidder is awarded the Contract and shall fail to complete the work authorized by a particular Work Order within the time limit or extended time limit agreed upon in that Work Order, as more particularly set forth in the Contract Documents, liquidated damages shall be paid to the Owner at the rate of $500 per day for all work authorized under said Work Order until the work shall have been satisfactorily completed as provided by the Contract Documents. Sundays and legal holidays shall be included in determining days in default.

ADDENDA

The Bidder hereby acknowledges that he has received Addenda No's. ____, _____, _____, ____, ____, (Bidder shall insert No. of each Addendum received) and agrees that all addenda issued are hereby made part of the Contract Documents, and the Bidder further agrees that his Proposal(s) includes all impact result in from said addenda.

SALES AND USE TAXES

The Bidder agrees that all federal, state, and local sales and use taxes are included in the stated bid Prices for the work.

ABREVIATIONS

Refer to Specification Section 01025 for a list of abbreviations used in the Bid Proposal for below.

BID PROPOSAL FORM

ITEM QUANTITY UNIT	UNIT PRICE FIGURES	TOTAL EXTENDED AMOUNT FIGURES

1. Performance and Payment Bonds

One Lump Sum $_____

2. Mobilization / Demobilization

1 Per Each $ _____ $_____

3. Asphaltic Concrete Leveling Course SP-12.5 (0.5" Thick) (Traffic Level C)

1,260 Ton $_____ $_____

4. Asphaltic Concrete Friction Course SP-9.5 (1.5" Thick - overlay) (Traffic Level C)

1,260 Ton $_____ $_____

5. Asphalt Milling (approx. 1.5 to 2 inch thickness, includes disposal)

22,900 S.Y. $_____ $_____

6. Asphalt Removal (over 2" thickness, includes disposal)

5,630 S.Y. $_____ $_____

7. Rework Existing Base (up to 10" deep)

5,630 S.Y. $_____ $_____

8. 12" Thick Lime Rock Stabilized Base (Per FDOT Section 230 at 98% modified proctor density)

3,000 S.Y. $_____ $_____

9. 6" Pavement Striping (70 Mil Thermoplastic in yellow / white / blue)

4,000 LF $_____ $_____

ITEM QUANTITY UNIT	UNIT PRICE FIGURES	TOTAL EXTENDED AMOUNT FIGURES

10. 12" Pavement Striping (70 Mil Thermoplastic in white / yellow)

500 LF $_____ $_____

11. 18" Pavement Striping (70 Mil Thermoplastic in white / yellow)

500 LF $_____ $_____

12. 24" Pavement Striping (70 Mil Thermoplastic in white)

250 LF $_____ $_____

13. Handicap Parking Space (70 Mil Thermoplastic including symbol)

15 Each $_____ $_____

14. Stop Bars (24 inch by 10 feet 70 Mil Thermoplastic)

80 Each $_____ $_____

15. Pavement Message (Per word in70 Mil Thermoplastic)

25 Each $_____ $_____

16. Directional Markings (70 Mil Thermoplastic)

10 each $_____ $_____

17. Reflective Pavement Markers (RPM's)

200 Each $_____ $_____

18. Reflective Curb Paint (FDOT Approved)

3,000 LF $_____ $_____

19. Raise / Lower Manholes

10 Each $_____ $_____

ITEM QUANT. UNIT	UNIT PRICE FIGURES	TOTAL EXTENDED AMOUNT FIGURES

20. Raise / Lower Water Valves

10 Each $_____ $_____

21. Raise / Lower Storm Water Inlet Grate

10 Each $_____ $_____

22. Replace Existing Storm Water Inlet Grate w/ ADA Compliant Inlet Grate (including frame)

10 Each $_____ $_____

23. Single Post Sign (includes existing sign/post removal, 3.5 inch diameter aluminum post, sign, brackets, concrete footer and installation)

20 Each $_____ $_____

24. Single Sign Post Reusing Existing Sign (includes post removal, 3.5”dia. alum. post, brackets, concrete footer and installation) (re-use existing sign)

20 Each. $_____ $_____

25. 4 inch thick sidewalk

50,000 SY $_____ $_____

26. 6 inch thick sidewalk

10,000 SY $_____ $_____

27. Synthetic Fiber Reinforcement (per Square Yard of Concrete)

1 Each $_____ $_____

28. Thickened Edge

2,000 LF $_____ $_____

29. FDOT Type “D” curb

1,000 LF $_____ $_____

ITEM QUANTITY UNIT	UNIT PRICE FIGURES	TOTAL EXTENDED AMOUNT FIGURES

30. FDOT Type "F" curb

1,000 LF $_____ $_____

31. Shoulder / Swale Restoration (include all equipment, labor and material (Washed Miami No. 57 Stone)

21,800 SY $_____ $_____

32. Seepage Trench

500 LF $_____ $_____

33. Failed Trench Restoration (per drawing)

1,000 LF $_____ $_____

34. Sod (w/ screenings and watering)

4,000 SF $_____ $_____

SUM OF EXTENDED TOTALS

_____ $_____

TOTAL IN WORDS TOTAL IN FIGURES

_____

Name of Firm Submitting Bid

_____

Signature of Bidder

_____

Title

SUBCONTRACTORS

The Bidder further Proposes that the following subcontracting firms or businesses will be awarded subcontracts for the following portions of the work in the event that the Bidder is awarded the Contract:

Portion of Work:_____

Name:_____

Address:_____

Phone:_____

Portion of Work:_____

Name:_____

Address:_____

Phone:_____

Portion of Work:_____

Name:_____

Address:_____

Phone:_____

Portion of Work:_____

Name:_____

Address:_____

Phone:_____

BIDDER

The name of the Bidder submitting this Proposal is: _____

_____ doing business at _____

_____, _____, _____

City State Zip

which is the address to which all communications concerned with this Proposal and with the Contract shall be sent.

The names of the Principal officers of the corporation submitting this Proposal, or of the partnership, or of all persons interested in this Proposal as Principals are as follows:

Name	Title

If Sole Proprietor or Partnership

IN WITNESS hereto the undersigned has set his (its) hand this_____ day of _____, 2015.

_____
Signature of Bidder

_____
Title

If Corporation

IN WITNESS WHEREOF the undersigned corporation has caused this instrument to be executed and its seal affixed by its duly authorized officers this ___ day of _____, 2015.

(SEAL)

Name of Corporation_____

By_____

Title_____

Attest_____
Secretary

EXPERIENCE OF BIDDER

The Bidder states that he is an experienced Contractor and has completed similar Projects within the last 5 years. Refer to Instructions to Bidders paragraph 6.D.

(List similar Projects, with types, names of clients, construction costs, and references with phone numbers. Use additional sheets if necessary.)

FLORIDA BID BOND

BOND NO._____

AMOUNT: $_____

KNOW ALL MEN BY THESE PRESENTS, that _____ hereinafter called the PRINCIPAL, and _____ a corporation duly organized under the laws of the State of_____ having its Principal place of business at _____ in the State of _____and authorized to do business in the State of Florida, as SURETY, are held firmly bound unto_____hereinafter called the Obligee, in the sum of DOLLARS($ _____)for the payment for which we bind ourselves, our heirs, executors, administrators, successors, and assigns, jointly and severally, firmly by these Presents.

THE CONDITION OF THIS BOND IS SUCH THAT:

WHEREAS, the PRINCIPAL is herewith submitting his or its Bid or Proposal for:

RIGHT-OF- WAY IMPROVEMENTS 2015, ITB 15 - 006, said Bid Proposal, by reference thereto, being hereby made a part hereof.

WHEREAS, the PRINCIPAL contemplates submitting or has submitted a bid to the OBLIGEE for the furnishing of labor, materials, (except those specifically furnished by the Owner), equipment, machinery, tools, apparatus, means of transportation for, and the performance of the work covered in the Proposal and the detailed Drawings and Specifications entitled:

RIGHT- OF - WAY IMPROVEMENTS 2015 / ITB 15-006

WHEREAS, it was a condition precedent to the submission of said bid that a cashier's check, certified check, or bid bond in the amount of 5 percent of the base bid be submitted with said bid as a guarantee that the Bidder would, if awarded the Contract, enter into a written Contract with the Owner for the performance of said Contract, within 5 working days after written notice having been given of the award of the Contract.

NOW, THEREFORE, the conditions of this obligation are such that if the PRINCIPAL within five working days after written notice of such acceptance, enters into a written Contract with the OBLIGEE then this obligation shall be void: otherwise the sum herein stated shall be due and payable to the OBLIGEE and the Surety herein agrees to pay said sum immediately upon demand of the OBLIGEE in good and lawful money of the United States of America, as liquidated damages for failure thereof of said

Principal.

Signed and sealed this _____ day of _____, 2015.

_____
PRINCIPAL

By : _____

_____
SURETY

By: _____
ATTORNEY IN FACT

SWORN STATEMENT UNDER SECTION 287.133(3)(a)
FLORIDA STATUTES, ON PUBLIC ENTITY CRIMES

THIS FORM MUST BE SIGNED IN THE PRESENCE OF A NOTARY PUBLIC OR OTHER OFFICE AUTHORIZED TO ADMINISTER OATHS.

1. This sworn statement is submitted with Bid, Proposal or Contract No._____

   for_____

2. This sworn statement is submitted by_____
   (name of entity submitting sworn statement)

   whose business address is_____

   _____ and (if applicable) its Federal Employer

   Identification Number (FEIN) is _____ (If the entity has no FEIN, include the Social

   Security Number of the individual signing this sworn statement.)

3. My name is_____and my relationship

   to_____ (please Pint name of individual signing) the entity named above is

   .

4. I understand that a "public entity crime" as defined in Paragraph 287.133(1)(g), Florida Statutes, means a violation of any state or federal law by a person with respect to and directly related to the transaction of business with any public entity or with an agency or political subdivision of any other state or with the United States, including but not limited to, any bid or contract for goods or services to be Provided to any public entity or an agency or political subdivision of any other state or of the United States and involving antitrust, fraud, theft, bribery, collusion, racketeering, conspiracy, material misrepresentation.

5. I understand that "convicted" or "conviction" as defined in Paragraph 287.133(l)(b), Florida Statutes, means a finding of guilt or a conviction of a public entity crime, with or without an adjudication guilt, in any federal or state trial court of record relating to charges brought by indictment information after July 1, 1989, as a result of a jury verdict, non-jury trial, or entry of a plea of guilty or nolo contendere.

6. I understand that an "affiliate" as defined in Paragraph 287.133(1)(a), Florida Statutes, means

   1. A Predecessor or successor of a person convicted of a public entity crime: or

   2. An entity under the control of any natural person who is active in the management of t entity and who has been convicted of a public entity crime. The term "affiliate" includes those officers, directors, executives, partners, shareholders, employees, members, and agents who are active in the management of an affiliate. The ownership by one person of shares constituting controlling interest in another person, or a pooling of equipment or income among persons when not for fair market value under an arm's length agreement, shall be a prima facie case that one person controls another person. A person who knowingly enters into a joint venture with a person who has been convicted of a public entity crime in Florida during the Preceding 36 months shall be considered an affiliate.

7. I understand that a "person" as defined in Paragraph 287.133(1)(8), Florida Statutes, means any natural person or entity organized under the laws of any state or of the United States with the legal power to enter into a binding contract and which bids or applies to bid on contracts for the Provision of goods or services let by a public entity, or which otherwise transacts or applies to transact business with a public entity. The term

"person" includes those officers, directors, executives, partners, shareholders, employees, members, and agents who are active in management of an entity.

8. Based on information and belief, the statement that I have marked below is true in relation to the entity submitting this sworn statement. (Please indicate which statement applies.)

___Neither the entity submitting this sworn statement, nor any officers, directors, executives, partners, shareholders, employees, members, or agents who are active in management of the entity, nor any affiliate of the entity have been charged with and convicted of a public entity crime subsequent to July 1, 1989.

__The entity submitting this sworn statement, or one or more of the officers, directors, executives, partners, shareholders, employees, members, or agents who are active in management of the entity, or an affiliate of the entity has been charged with no convicted of a public entity crime subsequent to July 1, 1989, AND (Please indicate which additional statement applies.)

____There has been a Proceeding concerning the conviction before a hearing of the State of Florida, Division of Administrative Hearings. The final order entered by the hearing officer did not place the person or affiliate on the convicted vendor list. (Please attach a copy of the final order.)

____The person or affiliate was placed on the convicted vendor list. There has been a subsequent Proceeding before a hearing officer of the State of Florida, Division of Administrative Hearings. The final order entered by the hearing officer determined that it was in the public interest to remove the person or affiliate from the convicted vendor list. (Please attach a copy of the final order.)

____The person or affiliate has not been put on the convicted vendor list. (Please describe any action taken by or pending with the Department of General Services.)

_____
(signature)

_____
(date)

STATE OF_____

COUNTY OF_____

PERSONALLY APPEARED BEFORE ME, the undersigned authority,

_____ who, after first being sworn by me, affixed his/her signature

_____ in the space provided above on this

(name of individual signing)

day of_____, 2015

My commission expires: _____
NOTARY PUBLIC

ANTI-KICKBACK AFFIDAVIT

STATE OF FLORIDA)
: SS
COUNTY OF MONROE)

I, the undersigned hereby duly sworn, depose and say that no portion of the sum herein bid will be paid to any employees of the City of Key West as a commission, kickback, reward or gift, directly or indirectly by me or any member of my firm or by an officer of the corporation.

By: _____

Sworn and subscribed before me this

_____day of _____, 2015

_____
NOTARY PUBLIC, State of Florida at Large

My Commission Expires:_____

INDEMNIFICATION

To the fullest extent permitted by law, the CONTRACTOR expressly agrees to indemnify and hold harmless the City of Key West, their officers, directors, agents, and employees (herein called the "indemnitees") from liabilities, damages, losses and costs, including, but not limited to, reasonable attorney's fees and court costs, such legal expenses to include costs incurred in establishing the indemnification and other rights agreed to in this Paragraph, to persons or property, to the extent caused by the negligence, recklessness, or intentional wrongful misconduct of the CONTRACTOR, its Subcontractors or persons employed or utilized by them in the performance of the Contract. Claims by indemnitees for indemnification shall be limited to the amount of CONTRACTOR's insurance or $1 million per occurrence, whichever is greater. The parties acknowledge that the amount of the indemnity required hereunder bears a reasonable commercial relationship to the Contract and it is part of the project specifications or the bid documents, if any.

The indemnification obligations under the Contract shall not be restricted in any way by any limitation on the amount or type of damages, compensation, or benefits payable by or for the CONTRACTOR under workers' compensation acts, disability benefits acts, or other employee benefits acts, and shall extend to and include any actions brought by or in the name of any employee of the CONTRACTOR or of any third party to whom CONTRACTOR may subcontract a part or all of the Work. This indemnification shall continue beyond the date of completion of the work.

CONTRACTOR: _____ SEAL:

_____
Address

_____
Signature

_____
Print Name

_____
Title

DATE: _____

LOCAL VENDOR CERTIFICATION PURSUANT TO CKW ORDINANCE 09-22 SECTION 2-798

The undersigned, as a duly authorized representative of the vendor listed herein, certifies to the best of his/her knowledge and belief, that the vendor meets the definition of a "Local Business." For purposes of this section, "local business" shall mean a business which:

a. Principle address as registered with the FL Department of State located within 30 miles of the boundaries of the city, listed with the chief licensing official as having a business tax receipt with its principle address within 30 miles of the boundaries of the city for at least one year immediately prior to the issuance of the solicitation.

b. Maintains a workforce of at least 50 percent of its employees from the city or within 30 miles of its boundaries.

c. Having paid all current license taxes and any other fees due the city at least 24 hours prior to the publication of the call for bids or request for proposals.

- Not a local vendor pursuant to Ordinance 09-22 Section 2-798
- Qualifies as a local vendor pursuant to Ordinance 09-22 Section 2-798

If you qualify, please complete the following in support of the self-certification & submit copies of your County and City business licenses. Failure to provide the information requested will result in denial of certification as a local business.

Business Name _____ Phone: _____

Current Local Address: _____ Fax:_____
(P.O Box numbers may not be used to establish status)

Length of time at this address:_____

_____ Date: _____
Signature of Authorized Representative

STATE OF_____ COUNTY OF_____

The foregoing instrument was acknowledged before me this _____day of_____, 2015.

By_____, of _____
(Name of officer or agent, title of officer or agent) (Name of corporation acknowledging)

or has produced identification_____as identification
(Type of identification)

_____
Signature of Notary

_____
Print, Type or Stamp Name of Notary

_____
Title or Rank

Return Completed form with
Supporting documents to:
City of Key West Purchasing

EQUAL BENEFITS FOR DOMESTIC PARTNERS AFFIDAVIT

STATE OF _____)
: SS
COUNTY OF _____)

I, the undersigned hereby duly sworn, depose and say that the firm of _____ provides benefits to domestic partners of its employees on the same basis as it provides benefits to employees' spouses per City of Key West Ordinance Sec. 2-799.

By: _____

Sworn and subscribed before me this

_____ Day of _____, 2015.

_____
NOTARY PUBLIC, State of _____ at Large

My Commission Expires: _____

CONE OF SILENCE AFFIDAVIT

STATE OF _____)
: SS
COUNTY OF _____)

I the undersigned hereby duly sworn depose and say that all owner(s), partners, officers, directors, employees and agents representing the firm of _____ have read and understand the limitations and procedures regarding communications concerning City of Key West issued competitive solicitations pursuant to City of Key West Ordinance Section 2-773 Cone of Silence (attached).

Sworn and subscribed before me this

_____ Day of _____, 2015.

_____

NOTARY PUBLIC, State of _____ at Large

My Commission Expires: _____

BIDDER'S CHECKLIST

(Note: The purpose of this checklist is to serve as a reminder of major items to be addressed in submitting a bid and is not intended to be all inclusive. It does not alleviate the Bidder from the responsibility of becoming familiar with all aspects of the Contract Documents and Proper completion and submission of his bid.)

1. All Contract Documents thoroughly read and understood ☐
2. All blank spaces in Proposal filled in black ink. ☐
3. Total and unit Prices added correctly. ☐
4. Addenda acknowledged. ☐
5. Subcontractors are named as indicated in the Proposal. ☐
6. Experience record included. ☐
7. Proposal signed by authorized officer. ☐
8. Bid Bond completed and executed, including power-of-attorney dated the same day. ☐
9. Bidder familiar with federal, state, and local laws, ordinances, rules and regulations affecting performance of the work. ☐
10. Bidder, if successful, able to obtain and/or demonstrate possession of required licenses and certificates within 10 days after receiving a Notice of Award. ☐
11. Proposal submitted intact with the volume containing the Bidding Requirements, Contract Forms, and Conditions of the Contract. ☐
12. Bid Documents submitted in sealed envelope and addressed and labeled in conformance with the instructions in the Invitation to Bid. ☐
13. Anti-kickback Affidavit, Public Entity Crime Forms, City of Key West Indemnification Form, Local Vendor Certification, Equal Benefits, Cone of Silence. ☐

PART 2

CONTRACT FORMS

CO N T R A C T

This Contract, made and entered into this _____ day of _____ , 2015, by and between the City of Key West, hereinafter called the "Owner", and _____ hereinafter called the "Contractor";

WITNESSETH:

The Contractor, in consideration of the sum to be paid him by the Owner and of the covenants and agreements herein contained, hereby agrees at his own Proper cost and expense to do all the work and furnish all the materials, tools, labor, and all appliances, machinery, and appurtenances necessary for installation, repair and replacement work of, sidewalks, curbs, storm inlets, handicap ramps, , located throughout the City of Key West, FL, to the extent of the Proposal made by the Contractor, dated the _____ day of _____, 2015, all in full compliance with the Contract Documents referred to herein:

INVITATION TO BID, PROPOSAL, PERFORMANCE AND PAYMENT BONDS, CONTRACT FORMS, CONDITIONS OF THE CONTRACT, SPECIFICATIONS, DRAWINGS, which consists of RIGHT-OF-WAY IMPROVEMENTS 2015, ITB 15 - 006 are hereby referred to and by reference made a part of this Contract as fully and completely as if the same were fully set forth herein and are mutually cooperative therewith.

In consideration of the performance of the work as set forth in these Contract Documents, the Owner agrees to pay to the Contractor the amount bid in the Proposal as adjusted in accordance with the Contract Documents, or as otherwise herein provided, and to make such payments in the manner and at the times provided in the Contract Documents.

The Contractor agrees to complete the work within the time specified in the Work Orders and to accept as full payment hereunder the amounts computed as determined by the Contract Documents and based on the said Proposal.

The Contractor agrees to remedy all defects appearing in the work or developing in the materials furnished and the workmanship performed under this Contract during the warranty period after the date of final acceptance of the work by the Owner, and further agrees to indemnify and save the Owner harmless from any costs encountered in remedying such defects.

It is agreed that the Contract, based upon the Proposal, shall be fully complete within the stated number of consecutive calendar days from the date the Notice to Proceed is issued, for each Work Order.

In the event that the Contractor shall fail to complete the work within the time limit or the extended time limit agreed upon, as more particularly set forth in the Contract Documents, liquidated damages shall be paid at the rate of $500 per day. Sundays and legal holidays shall be included in determining days in default. This Contract will automatically expire and be terminated one (1) years after the date of the execution of the Contract by the Owner.

IN WITNESS WHEREOF, we, the parties hereto, each herewith subscribe the same, this _____day of _____ , 2015.

CITY OF KEY WEST, FLORIDA

_____

By: Jim Scholl, CITY MANAGER

Contractor: _____

By: _____

Title: _____

FLORIDA PERFORMANCE BOND

BOND NO._____

AMOUNT: $_____

KNOW ALL MEN BY THESE PRESENTS, that _____of _____hereinafter called the CONTRACTOR (Principal), and _____a corporation duly organized and existing under and by virtue of the laws of the State of Florida, hereinafter called the SURETY, and authorized to transact business within the State of Florida, as SURETY, are held firmly bound unto The City of Key West as Owner (Obligee), in the sum of:

_____ DOLLARS ($_____),

lawful money of the United States of America, for the payment of which, well and truly be made to the Owner, the CONTRACTOR and the SURETY bind themselves and each of their heirs, executors, administrators, successors, and assigns, jointly and severally, firmly by these Presents as follows:

THE CONDITION OF THE ABOVE OBLIGATION IS SUCH THAT:

WHEREAS, the CONTRACTOR has executed and entered into a certain Contract for

RIGHT-OF- WAY IMPROVEMENTS 2015 / ITB 15-006

hereto attached, with the Owner, dated _____, 2015 to furnish at his own cost, charges, and expense all the necessary materials, equipment, and/or labor in strict and express accordance with the Contract Documents, and Specifications Prepared by the Owner, all of which is made a part of said Contract by certain terms and conditions in said Contract more particularly mentioned, which Contract, consisting of the various Contract Documents specifically mentioned herein and relative thereto, is made a part of this bond as fully and completely as if said Contract Documents were set forth herein.

NOW, THEREFORE, the conditions of this obligation are such that if the above bound CONTRACTOR shall in all respects comply with the terms and conditions of said Contract and his obligation thereunder, including the Contract Documents (which include the Specifications, and conditions as Prepared by the Owner, Invitation to Bid, Instructions to Bidders, the CONTRACTOR'S bid as accepted by the above OWNER, the Bid and the Contract Performance and Payment Bonds, and all Addenda, if any, issued Prior to the opening of bids), and shall indemnify and save harmless the above OWNER against and from all costs, expenses, damages, attorney fees, including appellate proceedings, injury, or loss to which said OWNER may be subject by reason of any wrongdoing, misconduct, want of care or skill, negligence, failure to petition within the prescribed time, or default, including patent infringements, on

the part of said CONTRACTOR, his agents or employees, in the execution or performance of said Contract: then this obligation shall be void; otherwise, to remain in full force and effect for the term of said Contract, including any and all guarantee periods as specifically mentioned in said Contract Documents;

RIGHT-OF- WAY IMPROVEMENTS 2015 / ITB 15-006

AND, the said SURETY, for value received, hereby stipulates and agrees that no change involving any extension of time, or addition to the terms of the Contract or to the work to be performed, or materials to be furnished thereunder, or in the CONTRACT DOCUMENTS or Specifications accompanying the said Contract shall affect said obligation of said SURETY on this bond, and the said SURETY does hereby waive notice of any such changes, extension of time, alterations, or additions of the terms of the Contract, or to the work, or to the Contract Documents and Specifications. Claimant shall give written notice to the CONTRACTOR and to the SURETY as required by Florida Statutes, Section 255.05 or Section 713.23. Any actions against the CONTRACTOR or the SURETY shall be brought within the time specified by Section 255.05 or Section 713.23.

IN WITNESS WHEREOF, the above parties bound together have executed this instrument this

_____ day of _____, 2015 the name and corporate seal of each corporate party being hereto affixed and those Presents duly signed by its undersigned representative, pursuant to authority of its governing body.

CONTRACTOR:

_____

By: _____(Seal)

_____Attest

SURETY

_____

By: _____(Seal)

_____
Attest

FLORIDA PAYMENT BOND

BOND NO. _____

AMOUNT: $ _____

KNOW ALL MEN BY THESE PRESENTS, that _____

of_____hereinafter called

the CONTRACTOR (Principal), and _____a

corporation duly organized under and by virtue of laws the State of Florida, herein after called the SURETY, and authorized to transact business within the State of Florida, as SURETY, are held and firmly bound unto The City of Key West as OWNER (OBLIGEE) in the sum of:

_____ Dollars ($ _____

), lawful money of the United States of America, for the payment of which, well and truly be made to the OWNER, THE CONTRACTOR and the SURETY bind themselves, each of their heirs, executors, administrators, successors, and assigns, jointly and severally, firmly by these Presents as follows:

THE CONDITION OF THE ABOVE OBLIGATION IS SUCH THAT:

WHEREAS, the CONTRACTOR has executed and entered into a certain Contract for

RIGHT-OF- WAY IMPROVEMENTS 2015, ITB 15 - 006

hereto attached, with the OWNER, dated _____, 2015 to furnish at his own cost, charges and expense all the necessary materials, equipment and/or labor in strict and express accordance with said Contract and Specifications Prepared by the Owner all of which is made a part of said Contract by certain terms and conditions in said Contract more particularly mentioned, which Contract, consisting of the various Contract Documents specifically mentioned herein and relative thereto, is made a part of this Bond as fully and completely as if said Contract Documents were set forth herein;

NOW THEREFORE, the conditions of this obligation are such that if the above bound CONTRACTOR shall in all respects comply with the terms and conditions of said Contract and his obligation thereunder, including the Contract Documents (which include the Specification and conditions as Prepared by the Owner, Invitation to Bid, Instruction to Bidders, the Contractor's bid as accepted by the above Owner, the Bid and the Contract Performance and Payment Bonds, and all Addenda, if any, issued Prior to the opening of bids) and further that if said CONTRACTOR shall Promptly make payments to all persons supplying materials, equipment, and/or labor, used directly or indirectly by said Contractor or subcontractors in the Prosecution of the work Provided for in said Contract in accordance with Florida Statutes, Section 255.05 or Section 713.23; then this obligation

shall be void; otherwise to remain in full force and effect for the term of said Contract, including any and all guarantee periods as specifically mentioned in said Contract Documents;

RIGHT-OF- WAY IMPROVEMENTS 2015 / ITB 15 - 006

AND, the said SURETY for value received, hereby stipulates and agrees that no change involving, or addition to the terms of the Contract or to the work to be performed, or materials to be furnished hereunder, Contract Documents and Specifications accompanying the said Contract shall affect said obligation of said SURETY on this Bond, and said SURETY does hereby waive notice of any such changes, alterations, or additions, of the terms of the Contract, or to the work, or to Specifications. Claimant shall give written notice to the Contractor and to the SURETY as required by Florida Statutes, Section 255.05 or Section 713.23.. Any actions against the Contractor or to the SURETY shall be brought within the time specified by Section 255.05 or Section 255.05 or Section 713.23.

IN WITNESS WHEREOF, the above parties bound together have executed this instrument this____ day of _____, 2015, the name and corporate seal of each corporate party being hereto affixed and those Presents duly signed by its undersigned representative, pursuant to authority of its governing body.

CONTRACTOR

_____

By:_____

_____

Attest

SURETY

By _____

Attorney-In-Fact

_____

Attest

GENERAL CONDITIONS

Article

DEFINITIONS

1. AS APPROVED
2. AS SHOWN, AND AS INDICATED
3. BIDDER
4. CONTRACT DOCUMENTS
5. CONTRACTOR
6. CONTRACT COMPLETION
7. DAYS
8. DRAWINGS
9. ENGINEER
10. NOTICE
11. OR EQUAL
12. OWNER
13. PLANS
14. SPECIFICATIONS
15. NOTICE TO PROCEED
16. SUBSTANTIAL COMPLETION
17. WORK

CONTRACT DOCUMENTS

18. INTENT OF CONTRACT DOCUMENTS
19. DISCREPANCIES AND OMISSIONS
20. CHANGES IN THE WORK
21. EXAMINATION AND VERIFICATION OF CONTRACT DOCUMENTS
22. DOCUMENTS TO BE KEPT ON THE JOBSITE
23. ADDITIONAL CONTRACT DOCUMENTS
24. OWNERSHIP OF CONTRACT DOCUMENTS

THE ENGINEER

25. AUTHORITY OF THE ENGINEER
26. DUTIES AND RESPONSIBILITIES OF THE ENGINEER
27. LIMITATIONS ON ENGINEER'S RESPONSIBILITIES
28. REJECTED WORK
29. LINES AND GRADES
30. SUBMITTALS
31. DETAIL DRAWINGS AND INSTRUCTIONS

THE CONTRACTOR AND HIS EMPLOYEES

32. CONTRACTOR, AN INDEPENDENT AGENT
32. (a) ASSIGNMENT OF CONTRACT
33. SUBCONTRACTING
34. INSURANCE AND LIABILITY
    A. GENERAL
    B. CONTRACTOR AND SUB-CONTRACTOR INSURANCE
    C. COMPENSATION AND EMPLOYER'S LIABILITY INSURANCE
    D. GENERAL LIABILITY INSURANCE (INCLUDING AUTOMOBILE)
    E. BUILDER'S RISK ALL RISK INSURANCE
    F. NO PERSONAL LIABILITY OF PUBLIC OFFICIALS
35. INDEMNITY
36. EXCLUSION OF CONTRACTOR CLAIMS

Article

37. TAXES AND CHARGES
38. REQUIREMENTS OF STATE LAW FOR PUBLIC WORKS PROJECTS
39. CODES, ORDINANCES, PERMITS, AND LICENSES
40. SUPERINTENDENCE
41. RECEPTION OF ENGINEER'S COMMUNICATIONS
42. SAFETY
43. PROTECTION OF WORK AND PROPERTY
44. RESPONSIBILITY OF CONTRACTOR TO ACT IN AN EMERGENCY
45. MATERIALS AND APPLIANCES
46. CONTRACTORS' AND MANUFACTURERS' COMPLIANCE WITH STATE SAFETY, OSHA, AND OTHER CODE REQUIREMENTS
47. SUBSTITUTION OF MATERIALS
48. TESTS, SAMPLES, AND OBSERVATIONS
49. ROYALTIES AND PATENT
50. CONTRACTOR'S RIGHT TO TERMINATE CONTRACT
51. CORRECTION OF DEFECTIVE WORK DURING WARRANTY PERIOD

PROGRESS OF THE WORK

52. BEGINNING OF THE WORK
53. SCHEDULES AND PROGRESS REPORTS
54. PROSECUTION OF THE WORK
55. OWNER'S RIGHT TO RETAIN IMPERFECT WORK
56. OWNER'S RIGHT TO DO WORK
57. OWNER'S RIGHT TO TRANSFER EMPLOYMENT
58. DELAYS AND EXTENSION OF TIME
59. DIFFERING SITE CONDITION
60. LIQUIDATED DAMAGES
61. OTHER CONTRACTS
62. USE OF PREMISES
63. SUBSTANTIAL COMPLETION DATE
64. PERFORMANCE TESTING
65. OWNER'S USE OF PORTION OF THE WORK
66. CUTTING AND PATCHING
67. CLEANING UP
68. PAYMENT FOR CHANGE ORDERS
A. UNIT PRICE
B. LUMP SUM
C. COST REIMBURSEMENT WORK
69. PARTIAL PAYMENTS
A. GENERAL
B. ESTIMATE
C. DEDUCTION FROM ESTIMATE
D. QUALIFICATIONS FOR PARTIAL PAYMENT FOR MATERIALS DELIVERED
E. PAYMENT
70. CLAIMS FOR EXTRA WORK
71. RELEASE OF LIENS OR CLAIMS
72. FINAL PAYMENT
73. NO WAIVER OF RIGHTS
74. ACCEPTANCE OF FINAL PAYMENT CONSTITUTES RELEASE

DEFINITIONS

Whenever in the Contract Documents the following terms are used, the intent and meaning shall be interpreted as follows:

1. AS APPROVED

The words "as approved", unless otherwise qualified, shall be understood to be followed by the words "by the Engineer for conformance with the Contract Document".

2. AS SHOWN, AND AS INDICATED

The words "as shown" and "as Indicated" shall be understood to be followed by the words "on the Drawings".

3. BIDDER

The person or persons, partnership, firm, or corporation submitting a Proposal for the work contemplated.

4. CONTRACT DOCUMENTS

The "Contract Documents" consist of the Bidding Requirements, Contract Forms, Conditions of the Contact, Specifications, Drawings, all modifications thereof incorporated into the Documents before their execution, Change Orders, and all other requirements incorporated by specific reference thereto. These form the Contract.

5. CONTRACTOR

The person or persons, partnership, firm, or corporation who enters into the Contract awarded him by the Owner.

6. CONTRACT COMPLETION

The "Contract Completion" is the date the Owner accepts the entire work as being in compliance with the Contract Documents, or formally waives nonconforming work to extent of nonconformity, and issues the final payment in accordance with the requirements set forth in Article, "Final Payment" of these General Conditions.

7. DAYS

Unless otherwise specifically stated, the term "days" will be understood to mean calendar days. Business day or working day means any day other than Saturday, Sunday, or legal holiday.

8. DRAWINGS

The term "Drawings" refers to the official Drawings, Profiles, cross sections, elevations, details, and other working drawings and supplementary drawings, or reproductions thereof, signed by the Engineer, which shows the location, character, dimensions, and details of the work to be performed. Drawings may either be bound in the same book as the balance of the Contract Documents, or bound in separate sets, and are a part of the Contract Documents, regardless of the method of binding.

9. ENGINEER

The person or organization identified as such in the Contract Documents. The Term "Engineer" means Engineer or his authorized representative.

10. NOTICE

The term "notice" or the requirement to notify, as used in the Contract Documents or applicable state or federal statutes, shall signify a written communication delivered in person or by registered mail to the individual, or to a member of the

firm, or to an officer of the corporation for whom it is intended. Certified or registered mail shall be addressed to the last business address known to him who gives the notice.

11. OR EQUAL

The term "or equal" shall be understood to indicate that the "equal" Product is equivalent to or better than the Product named in function, performance, reliability, quality, and general configuration. Determination of equality in reference to the Project design requirements will be made by the Engineer. Such equal Products shall not be purchased or installed by the Contractor without written authorization.

12. OWNER

The person, organization, or public body identified as such in the Contract Documents.

13. PLANS (See Drawings)

14. SPECIFICATIONS

The term "Specifications" refers to those portions of the Contract Documents consisting of written technical descriptions of materials, equipment, construction systems, standards, and workmanship as applied to the work and certain administrative details applicable thereto. Where standard specifications, such as those of ASTM, AASHTO, etc., have been referred to, the applicable portions of such standard specifications shall become a part of these Contract Documents. If referenced specifications conflict with specifications contained herein, the requirements contained herein shall prevail.

15. NOTICE TO PROCEED

A written notice given by the Owner to the Contractor (with a copy to the Engineer) fixing the date on which the Contract time will commence to run and on which the Contractor shall start to perform his obligation under the Contract Documents. The Notice to Proceed will be given within 30 days following the execution of the Contract by the Owner.

16. SUBSTANTIAL COMPLETION

"Substantial Completion" shall be that degree of completion of the Project or a defined portion of the Project, as evidenced by the Engineer's written notice of Substantial Completion, sufficient to Provide the Owner, at his discretion, the full-time use of the Project or defined portion of the Project for the purposes for which it was intended. "Substantial Completion" of an operating facility shall be that degree of completion that has Provided a minimum of 7 continuous days of successful, trouble-free, operation, which period shall begin after all performance and acceptance testing has been successfully demonstrated to the Engineer. All equipment contained in the work, plus all other components necessary to enable the Owner to operate the facility in a manner that was intended, shall be complete on the substantial completion date.

17. WORK

The word "work" within these Contract Documents shall include all material, labor, tools, and all appliances, machinery, transportation, and appurtenances necessary to perform and complete the Contract, and such additional items not specifically indicated or described which can be reasonably inferred as belonging to the item described or indicated and as required by good Practice to Provide a complete and satisfactory system or structure. As used herein, "Provide" shall be understood to mean "furnish and install, complete in-place ".

<u>CONTRACT DOCUMENTS</u>

18. INTENT OF CONTRACT DOCUMENTS

The Contract Documents are complementary, and what is called for by one shall be as binding as if called for by all. The intent of the Documents is to describe a functionally complete Project (or part thereof) to be constructed in

accordance with the Contract Documents. Any work, materials, or equipment that may reasonably be inferred from the Contract Documents as being required to produce the intended result shall be supplied whether or not specifically called for. When words which have a well-known technical or trade meaning are used to describe work, materials, or equipment, such words shall be interpreted in accordance with that meaning.

Reference to standard specifications, manuals, or codes of any technical society, organization or association, or to the laws or regulations of any governmental authority, whether such reference be specific or by implication, shall mean the latest standard specification, manual, code or laws or regulations in effect on the first published date of the Invitation to Bid, except as may be otherwise specifically stated. However, no Provision of any referenced standard specification, manual or code (whether or not specifically incorporated by reference in the Contract Documents) shall be effective to change the duties and responsibilities of Owner, Contractor, or Engineer, or any of their consultants, agents, or employees from those set forth in the Contract Documents, nor shall it be effective to assign to Engineer, or any Engineer's consultants, agents, or employees, any duty or authority to supervise or direct the furnishing or performance of the work or any duty or authority to undertake responsibility contrary to the Provisions of Article LIMITATIONS ON ENGINEER'S RESPONSIBILITIES.

19. DISCREPANCIES AND OMISSIONS

Any discrepancies or omissions found in the Contract Documents shall be reported to the Engineer immediately. The Engineer will clarify discrepancies or omissions, in writing, within a reasonable time.

In resolving inconsistencies among two or more sections of the Contract Documents, Precedence shall be given in the following order:

A. CONTRACT
B. PROPOSAL
C. SUPPLEMENTARY CONDITIONS
D. INVITATION TO BID
E. INSTRUCTIONS TO BIDDERS
F. GENERAL CONDITIONS
G. SPECIFICATIONS
H. DRAWINGS

Addenda shall take Precedence over all sections referenced therein. Figure dimensions on Drawings shall take Precedence over scale dimensions. Detailed Drawings shall take Precedence over general Drawings.

20. CHANGES IN THE WORK

The Owner, without notice to the Sureties and without invalidating the Contract, may order changes in the work within the general scope of the Contract by altering, adding to, or deducting from the work, the Contract being adjusted accordingly. All such work shall be executed under the conditions of the original Contract, except as specifically adjusted at the time of ordering such change.

In giving instructions, the Engineer may order minor changes in the work not involving extra cost and not inconsistent with the purposes of the Project, but otherwise, except in an emergency endangering life and Property, additions or deductions from the work shall be performed only in pursuance of an approved Change Order from the Owner, countersigned by the Engineer.

If the work is reduced by alterations, such action shall not constitute a claim for damages based on loss of anticipated Profits.

21. EXAMINATION AND VERIFICATION OF CONTRACT DOCUMENTS

The Contractor shall thoroughly examine and become familiar with all of the various parts of these Contract Documents and determine the nature and location of the work, the general and local conditions, and all other matters, which can in any way affect the work under this Contract. Failure to make an examination necessary for this determination shall not release the Contractor from the obligations of this Contract. No verbal agreement or conversation with any officer, agent, or employee of the Owner, or with the Engineer either before or after the execution of this Contract shall affect or modify any of the terms or obligations herein contained.

22. DOCUMENTS TO BE KEPT ON THE JOBSITE

The Contractor shall keep one copy of the Contract Documents on the job- site, in good order, available to the Engineer and to his representatives.

The Contractor shall maintain on a daily basis at the jobsite, and make available to the Engineer on request, one current record set of the Drawings which have been accurately marked to indicate all modifications in the completed work that differ from the design information shown on the Drawings. Upon Substantial completion of the work, the Contractor shall give the Engineer one complete set of these marked up record Drawings.

23. ADDITIONALCONTRACT DOCUMENTS

Copies of Contract Documents or Drawings may be obtained on request from the Engineer and by paying the actual cost of reproducing the Contract Documents or Drawings.

24. OWNERSHIP OF CONTRACT DOCUMENTS

All portions of the Contract Documents, and copies thereof furnished by the Engineer are instruments of service for this Project. They are not to be used on other work and are to be returned to the Engineer on request at the completion of the work. Any reuse of these materials without specific written verification or adaptation by the Engineer will be at the risk of the user and without liability or legal expense to the Engineer. Such user shall hold the Engineer harmless from any and all damages, including reasonable attorneys' fees, from any and all claims arising from any such reuse. Any such verification and adaptation shall entitle the Engineer to further compensation at rates to be agreed upon by the user and the Engineer.

THE ENGINEER

25. AUTHORITY OF THE ENGINEER

The Engineer will be the Owner's representative during the construction period. His authority and responsibility will be limited to the Provisions set forth in these Contract Documents. The Engineer will have the Authority to reject work that does not conform to the Contract Documents. However, neither the Engineer's authority to act under this Provision, nor any decision made by him in good faith either to exercise or not to exercise such authority, shall give rise to any duty or responsibility of the Engineer to the Contractor, any Subcontractor, their respective Sureties, any of their agents or employees, or any other person performing any of the work.

26. DUTIES AND RESPONSIBILITIES OF THE ENGINEER

The Engineer will make periodic visits to the site at various stages of construction to observe the Progress and quality of the work and to determine, in general, if the work is proceeding in accordance with the intent of the Contract Documents. He will not make comprehensive or continuous review or observation to check quality or quantity of the work, and will not be responsible for construction means, methods, techniques, sequences, or Procedures, or for safety Precautions and Programs in connection with the work. Visits and observations made by the Engineer shall not relieve the Contractor of his obligation to conduct comprehensive inspections of the work and to furnish materials and perform acceptable work, and to provide adequate safety Precautions, in conformance with the intent of the Contract.

The Engineer will make recommendations to the Owner, in writing, on all claims of the Owner or the Contractor arising from interpretation or execution of the Contract Documents. Such recommendations will be of factual and/or technical nature, and will not include the legal interpretation of the Contract Documents. Any necessary legal interpretation of the Contract Document will be made by the Owner. Such recommendation shall be necessary before the Contractor can receive additional money under the terms of the Contract. Changes in work ordered by the Engineer shall be made in compliance with Article CHANGES IN THE WORK.

One or more Project representatives may be assigned to observe the work. It is understood that such Project representatives shall have the authority to issue notice of nonconformance and make decisions within the limitations of the authority of the Engineer. The Contractor shall furnish all reasonable assistance required by the Engineer or Project representatives for Proper observation of the work. The above-mentioned Project representatives shall not relieve the Contractor of his obligations to conduct comprehensive inspections of the work and to furnish materials and perform acceptable work, and to provide adequate safety Precautions, in conformance with the intent of the Contract.

27. LIMITATIONS ON ENGINEER'S RESPONSIBILITIES

Engineer will not be responsible for Contractor's means, methods, techniques, sequences, or Procedures of construction, or the safety Precautions and Programs incident thereto, and Engineer will not be responsible for Contractor's failure to perform or furnish the work in accordance with the Contract Documents.

Engineer will not be responsible for the acts or omissions of Contractor or of any Subcontractor, any supplier, or of any other person or organization performing or furnishing any of the work.

Whenever in the Contract Documents the terms "as ordered", "as directed", "as required", "as allowed", "as approved", or terms of like effect or import are used, or the adjectives "reasonable", "suitable", "acceptable", "Proper", or "satisfactory", or adjectives of like effect or import are used to describe a requirement, direction, review or judgment of Engineer as to the work, it is intended that such requirement, direction, review or judgment will be solely to evaluate the work for compliance with the Contract Documents (unless there is a specific statement indicating otherwise). The use of any such term or adjective shall not be effective to assign to Engineer any duty or authority to supervise or direct the furnishing or performance of the work or any duty or authority to undertake responsibility contrary to the Provisions of this Article.

28. REJECTED WORK

Any defective work or nonconforming materials or equipment that may be discovered at any time prior to expiration of the warranty period, shall be removed and replaced by work which shall conform to the Provisions of the Contract Documents. Any material condemned or rejected shall be removed at once from the Project site.

Failure on the part of the Engineer to condemn or reject bad or inferior work or to note nonconforming materials or equipment on Contractor submittals shall not be construed to imply acceptance of such work. The Owner shall reserve and retain all of its rights and remedies at law against the Contractor and its Surety for correction of any and all latent defects discovered after the guarantee period.

29. LINES AND GRADES

Lines and grades shall be established as provided in the supplementary conditions. All stakes, marks, and other reference information shall be carefully Preserved by the Contractor, and in case of their careless or unnecessary destruction or removal by him or his employees, such stakes, marks, and other information shall be replaced at the Contractor's expense.

30. SUBMITTALS

After checking and verifying all field measurements and after complying with applicable Procedures specified in Division I, GENERAL REQUIREMENTS, Contractor shall submit to Engineer, in accordance with the schedule for submittals for review, shop drawings, electrical diagrams, and catalog cuts for fabricated items and manufactured items (including mechanical and electrical equipment), which shall bear a stamp or specific written indication that Contractor has satisfied

Contractor's responsibilities under the Contract Documents with respect to the review of the submittal. All submittals shall be identified as Engineer may require. The data shown shall be complete with respect to quantities, dimensions specified, performance and design criteria, materials, and similar data to enable Engineer to review the information. Contractor shall also submit to Engineer for review, with such Promptness as to cause no delay in work, all samples required by the Contract Documents. All samples shall have been checked by and accompanied by a specific written indication that Contractor has satisfied Contractor's responsibilities under the Contract Documents with respect to the review of the submission and shall be identified clearly as to material, supplier, pertinent data such as catalog numbers and the use for which intended.

Before submission of each submittal, Contractor shall have determined and verified all quantities, dimensions, specified performance criteria, installation requirements, materials, catalog numbers, and similar data with respect thereto and reviewed or coordinated each submittal with other submittals and with the requirements of the work and the Contract Documents.

At the time of each submission, Contractor shall give Engineer specific written notice of each variation that the submittal may have from the requirements of the Contract Documents, and, in addition, shall cause a specific notation to be made on each shop drawing submitted to Engineer for review and approval of each variation.

Engineer will review submittals with reasonable Promptness, but Engineer's review will be only for conformance with the design concept of the Project and for compliance with the information given in the Contract Documents and shall not extend to means, methods, techniques, sequences, or Procedures of construction (except where a specific means, method, technique, sequence, or Procedure of construction is indicated in or required by the Contract Documents) or to safety Precautions or Programs incident thereto. The review of a separate item as such will not indicate review of the assembly in which the item functions. Contractor shall make corrections required by Engineer, and shall return the required number of corrected copies of shop drawings and submit as required new samples for review. Contractor shall direct specific attention in writing to revisions other than the corrections called for by Engineer on Previous submittals.

Engineer's review of submittals shall not relieve Contractor from the responsibility for any variation from the requirements of the Contract Documents unless Contractor has in writing called Engineer's attention to each such variation at the time of submission and Engineer has given written approval of each such variation by a specific written notation thereof incorporated therein or accompanying the shop drawing or sample approval; nor will any approval by Engineer relieve Contractor from responsibility for errors or omissions in the shop drawings or from responsibility for having complied with the Provisions herein.

Where a shop drawing or sample is required by the specifications, any related work performed prior to Engineer's review and approval of the pertinent submission shall be at the sole expense and responsibility of the Contractor.

31. DETAIL DRAWINGS AND INSTRUCTIONS

The Engineer will furnish, with reasonable Promptness, additional instructions by means of Drawings or otherwise, if, in the Engineer's opinion, such are required for the Proper execution of the work. All such Drawings and instructions will be consistent with the Contract Documents, true developments thereof, and reasonably inferable there from.

<u>THE CONTRACTOR AND HIS EMPLOYEES</u>

32. CONTRACTOR, AN INDEPENDENT AGENT

The Contractor shall independently perform all work under this Contract and shall not be considered as an agent of the Owner or of the Engineer, nor shall the Contractor's Subcontractors or employees be subagents of the Owner or of the Engineer.

32. (a) ASSIGNMENT OF CONTRACT

Assignment of any part or the whole of this Contract shall be subject to review and approval of the City Commission.

33. SUBCONTRACTING

Unless modified in the Supplementary Conditions, within 10 days after the execution of the Contract, the Contractor shall submit to the Engineer the names of all Subcontractors Proposed for the work, including the names of any Subcontractors that were submitted with the Proposal. The Contractor shall not employ any subcontractors to which the Owner may object to as lacking capability to properly perform work of the type and scope anticipated.

The Contractor is as fully responsible to the Owner for the acts and omissions of his Subcontractors and of persons either directly or indirectly employed by them as he is for the acts and omissions of persons directly employed by him.

Nothing contained in the Contract Documents shall create any contractual relationship between any Subcontractor and the Owner or Engineer.

34. INSURANCE AND LIABILITY

A. GENERAL

The Contractor shall provide (from insurance companies acceptable to the Owner) the insurance coverage designated hereinafter and pay all costs before commencing work under this Contract. Contractor shall furnish the Owner with certificates of insurance specified herein showing the type, amount class of operations covered, effective dates, and date of expiration of policies, and containing substantially the following statement:
"The insurance covered by this certificate shall not be canceled or materially altered, except after 30 days' written notice has been received by the Owner."

In case of the breach of any Provision of this Article, the Owner, at his option, may take out and maintain, at the expense of the Contractor, such insurance as the Owner may deem Proper and may deduct the cost of such insurance from any monies which may be due or become due the Contractor under this Contract.

B. CONTRACTOR & SUBCONTRACTOR INSURANCE

The Contractor shall not commence work under this Contract until he has obtained all the insurance required hereunder and such insurance has been reviewed by the Owner, nor shall the Contractor allow any Subcontractor to commence work on his subcontract until insurance specified below has been obtained. Review of the insurance by the Owner shall not relieve or decrease the liability of the Contractor hereunder.

C. COMPENSATION AND EMPLOYER'S LIABILITY INSURANCE

The Contractor shall maintain during the life of this Contract the statutory amount of Workmen's Compensation Insurance, in addition, Employer's Liability Insurance in an amount as specified in the Supplementary Conditions, for each occurrence, for all of his employees to be engaged in work on the Project under this Contract. In case any such work is subcontracted, the Contractor shall require the Subcontractor to provide similar Workmen's Compensation and Employer's Liability Insurance for all of the Subcontractor's employees to be engaged in such work.

D. GENERAL LIABILITY INSURANCE (INCLUDING AUTOMOBILE)

The Contractor shall maintain during the life of this Contract such general liability, completed operations and Products liability, and automobile liability insurance as will Provide coverage for claims for damages for personal injury, including accidental death, as well as for claims for Property damage, which may arise directly or indirectly from performance of the work under this Contract. The general liability policy shall include contractual liability assumed by the Contractor under Article **INDEMNITY.** Coverage for Property damage shall be on a "broad form" basis with no exclusions for "X, C & U". The amount of insurance to be provided shall be as specified in the Supplementary Conditions.
In the event any work under this Contract is performed by a Subcontractor, the Contractor shall be responsible for any liability directly or indirectly arising out of the work performed by the Subcontractor, to the extent such liability is not covered by the Subcontractor's insurance.

The Owner and Engineer, their officers, agents, and employees shall be named as Additional Insured’s on the Contractor's and any Subcontractor's general liability and automobile liability insurance policies for any claims arising out of work performed under this Contract.

E. BUILDERS RISK ALL RISK INSURANCE

Unless otherwise modified in the Supplementary Conditions, the Contractor shall secure and maintain during the life of this Contract, Builders Risk All Risk Insurance coverage in an amount equal to the full value of the facilities under construction. Such insurance shall include coverage for earthquake, landslide, flood, collapse, loss due to the results of faulty workmanship or design, and all other normally covered risks, and shall provide for losses to be paid to the Contractor, Owner, and Engineer as their interests may appear.

The Owner and Engineer, their officers, agents, and employees shall be named as additional insured's on the Contractor's and any subcontractor's Builders Risk All Risk insurance policies for any claims arising out of work performed under this Contract.

This insurance shall include a waiver of subrogation as to the Engineer, the Owner, the Contractor, and their respective officers, agents, employees and subcontractors.

F. NO PERSONAL LIABILITY OF PUBLIC OFFICIALS

In carrying out any of the Provisions hereof in exercising any authority granted by the Contract, there will be no personal liability upon any public official.

35. INDEMNITY

To the maximum extent permitted by law, the Contractor shall indemnify and defend the Owner and the Engineer, and their officers, employees, agents, and sub-consultants, from all claims and losses, including attorney's fees and litigation costs arising out of Property losses or health, safety, personal injury, or death claims by the Contractor, its subcontractors of any tier, and their employees, agents, or invitees regardless of the fault, breach of Contract, or negligence of the Owner or Engineer, excepting only such claims or losses that have been adjudicated to have been caused solely by the negligence of the Owner or the Engineer and regardless of whether or not the Contractor is or can be named a party in a litigation.

36. EXCLUSION OF CONTRACTOR CLAIMS

In performing its obligations, the Engineer and its consultants may cause expense for the Contractor or its subcontractors and equipment or material suppliers. However, those parties and their sureties shall maintain no direct action against the Engineer, its officers, employees, agents, and consultants for any claim arising out of, in connection with, or resulting from the engineering services performed or required to be performed.

37. TAXES AND CHARGES

The Contractor shall withhold and pay any and all sales and use taxes and all withholding taxes, whether State or Federal, and pay all Social Security charges and also all State Unemployment Compensation charges, and pay or cause to be withheld, as the case may be, any and all taxes, charges, or fees or sums whatsoever, which are now or may hereafter be required to be paid or withheld under any laws.

38. REQUIREMENTS OF STATE LAW FOR PUBLIC WORKS PROJECTS

When the Contract Documents concern public works of the state or any county, municipality, or political subdivision created by its laws, the applicable statutes shall apply. All parties to this Contract shall determine the contents of all applicable statutes and comply with their Provisions throughout the performance of the Contract.

39. CODES, ORDINANCES, PERMITS AND LICENSES

The Contractor shall keep himself fully informed of all local codes and ordinances, as well as state and federal laws, which in any manner affect the work herein specified. The Contractor shall at all times comply with said codes and ordinances, laws, and regulations, and Protect and indemnify the Owner, the Engineer and their respective employees,

and its officers and agents against any claim or liability arising from or based on the violation of any such laws, ordinances, or regulations. All permits, licenses and inspection fees necessary for Prosecution and completion of the work shall be secured and paid for by the Contractor, unless otherwise specified.

40. SUPERINTENDENCE

The Contractor shall keep at the Project site, competent supervisory personnel. The Contractor shall designate, in writing, before starting work, a Project superintendent who shall be an employee of the Contractor and shall have complete authority to represent and to act for the Contractor. Engineer shall be notified in writing prior to any change in superintendent assignment. The Contractor shall give efficient supervision to the work, using his best skill and attention. The Contractor shall be solely responsible for all construction means, methods, techniques, and Procedures, and for providing adequate safety Precautions and coordinating all portions of the work under the Contract. It is specifically understood and agreed that the Engineer, its employees and agents, shall not have control or charge of and shall not be responsible for the construction means, methods, techniques, Procedures, or for providing adequate safety Precautions in connection with the work under Contract.

41. RECEPTION OF ENGINEER'S COMMUNICATIONS

The superintendent shall receive for the Contractor all communications from the Engineer. Communications of major importance will be confirmed in writing upon request from the Contractor. The Engineer may schedule Project meetings for the purposes of discussing and resolving matters concerning the various elements of the work. Time and place for these meetings and the names of persons required to be Present shall be as determined by the Engineer. Contractor shall comply with these attendance requirements and shall also require his Subcontractors to comply.

42. SAFETY

The Contractor shall be solely and completely responsible for conditions of the jobsite, including safety of all persons (including employees) and Property during performance of the work. This requirement shall apply continuously and not be limited to normal working hours. Safety Provisions shall conform to U.S. Department of Labor (OSHA), and all other applicable federal, state, county, and local laws, ordinances, codes, and regulations. Where any of these are in conflict, the more stringent requirement shall be followed. The Contractor's failure to thoroughly familiarize himself with the aforementioned safety Provisions shall not relieve him from compliance with the obligations and penalties set forth therein.

The Contractor shall develop and maintain for the duration of this Contract, a safety Program that will effectively incorporate and implement all required safety Provisions. The Contractor shall appoint an employee who is qualified and authorized to supervise and enforce compliance with the safety Program.
The duty of the Engineer to conduct construction review of the work does not include review or approval of the adequacy of the Contractor's safety Program, safety supervisor, or any safety measures taken in, on, or near the construction site.
The Contractor, as a part of his safety Program, shall maintain at his office or other well-known place at the jobsite, safety equipment applicable to the work as Prescribed by the aforementioned authorities, all articles necessary for giving first-aid to the injured, and shall establish the Procedure for the immediate removal to a hospital or a doctor's care of persons (including employees) who may be injured on the jobsite.

If death or serious injuries or serious damages are caused, the accident shall be reported immediately by telephone or messenger to both the Engineer and the Owner. In addition, the Contractor must promptly report in writing to the Engineer all accidents whatsoever arising out of, or in connection with, the performance of the work whether on, or adjacent to, the site, giving full details and statements of witnesses.

If a claim is made by anyone against the Contractor or any Subcontractor on account of any accident, the Contractor shall promptly report the facts in writing to the Engineer, giving full details of the claim.

43. PROTECTION OF WORK AND PROPERTY

The Contractor shall at all times safely guard and Protect from damage the Owner's Property, adjacent Property, and his own work from injury or loss in connection with this Contract. All facilities required for Protection by federal, state, or municipal laws and regulations and local conditions must be provided and maintained.

The Contractor shall Protect his work and materials from damage due to the nature of the work, the elements, carelessness of other contractors, or from any cause whatever until the completion and acceptance of the work. All loss or damages arising out of the nature of the work to be done under these Contract Documents, or from any unforeseen obstruction or defects which may be encountered in the Prosecution of the work, or from the action of the elements, shall be sustained by the Contractor.

44. RESPONSIBILITY OF CONTRACTOR TO ACT IN AN EMERGENCY

In case of an emergency which threatens loss or injury of Property, and/or safety of life, the Contractor shall act, without previous instructions from the Owner or Engineer, as the situation may warrant. The Contractor shall notify the Engineer thereof immediately thereafter. Any claim for compensation by the Contractor, together with substantiating documents in regard to expense, shall be submitted to the Owner through the Engineer and the amount of compensation shall be determined by agreement.

45. MATERIALS AND APPLIANCES

Unless otherwise stipulated, the Contractor shall Provide and pay for all materials, labor, water, tools, equipment, heat, light, fuel, power, transportation, construction equipment and machinery, appliances, telephone, sanitary facilities, temporary facilities and other facilities and incidentals necessary for the execution and completion of the work.

Unless otherwise specified, all materials shall be new, and both workmanship and materials shall be of good quality. The Contractor shall, if required, furnish satisfactory evidence as to the kind and quality of materials.
In selecting and/or approving equipment for installation in the Project, the Owner and Engineer assume no responsibility for injury or claims resulting from failure of the equipment to comply with applicable federal, state, and local safety codes or requirements, or the safety requirements of a recognized agency, or failure due to faulty design concepts, or defective workmanship and materials.

46. CONTRACTORS' AND MANUFACTURERS' COMPLIANCE WITH STATE SAFETY, OSHA, AND OTHER CODE REQUIREMENTS

The completed work shall include all necessary permanent safety devices, such as machinery guards and similar ordinary safety items required by the state and federal (OSHA) industrial authorities and applicable local and national codes. Further, any features of the work subject to such safety regulations shall be fabricated, furnished, and installed (including Owner-furnished equipment) in compliance with these requirements. Contractors and manufacturers of equipment shall be held responsible for compliance with the requirements included herein. Contractors shall notify all equipment suppliers and Subcontractors of the Provisions of this Article.

47. SUBSTITUTION OF MATERIALS

Except for Owner-selected equipment items, and items where no substitution is clearly specified, whenever any material, article, device, Product, fixture, form, type of construction, or Process is indicated or specified by patent or Proprietary name, by name of manufacturer, or by catalog number, such specifications shall be deemed to be used for the purpose of establishing a standard of quality and facilitating the description of the material or Process desired. This Procedure is not to be construed as eliminating from competition other Products of equal or better quality by other manufacturers where fully suitable in design, and shall be deemed to be followed by the words "or equal". The Contractor may, in such cases, submit complete data to the Engineer for consideration of another material, type, or Process that shall be substantially equal in every respect to that so indicated or specified. Substitute materials shall not be used unless approved in writing. The Engineer will be the sole judge of the substituted article or material.

48. TESTS, SAMPLES, AND OBSERVATIONS

The Contractor shall furnish, without extra charge, the necessary test pieces and samples, including facilities and labor for obtaining the same, as requested by the Engineer. When required, the Contractor shall furnish certificates of tests of materials and equipment made at the point of manufacture by a recognized testing laboratory.

The Owner, Engineer, and authorized government agents, and their representatives shall at all times be Provided safe access to the work wherever it is in Preparation or Progress, and the Contractor shall Provide facilities for such access and for observations, including maintenance of temporary and permanent access.

If the Specifications, laws, ordinances, or any public authority require any work, to be specially tested or approved, the Contractor shall give timely notice of its readiness for observations. If any work should be covered up without approval or consent of the Engineer, it shall, if required by the Engineer, be uncovered for examination at the Contractor's expense.

Reexamination of questioned work may be ordered by the Engineer, and, if so ordered, the work shall be uncovered by the Contractor. If such work is found to be in accordance with the Contract Documents, the Owner will pay the cost of uncovering, exposure, observation, inspection, testing and reconstruction. If such work is found to be not in accordance with the Contract Documents, the Contractor shall correct the defective work, and the cost of reexamination and correction of the defective work shall be paid by the Contractor.

49. ROYALTIES AND PATENTS

The Contractor shall pay all royalty and licenses fees, unless otherwise specified. The Contractor shall defend all suits or claims for infringement of any patent rights and shall save the Owner and the Engineer harmless from any and all loss, including reasonable attorneys' fees, on account thereof.

50. CONTRACTOR'S RIGHT TO TERMINATE CONTRACT

If the work should be stopped under an order of any court or other public authority for a period of more than 3 months, through no act or fault of the Contractor, its Subcontractors, or respective employees or if the Engineer should fail to make recommendation for payment to the Owner or return payment request to Contractor for revision within 30 days after it is due, or if the Owner should fail to pay the Contractor within 30 days after time specified in Article PARTIAL PAYMENTS, any sum recommended by the Engineer, then the Contractor may, upon 15 days' written notice to the Owner and the Engineer, stop work or terminate this Contract and recover from the Owner payment for all acceptable work performed and reasonable termination expenses, unless said default has been remedied.

51. CORRECTION OF DEFECTIVE WORK DURING WARRANTY PERIOD

The Contractor hereby agrees to make, at his own expense, all repairs or replacements necessitated by defects in materials or workmanship, Provided under terms of this Contract, and pay for any damage to other works resulting from such defects, which become evident within 2 years after the date of final acceptance of the work or within 2 years after the date of substantial completion established by the Engineer for specified items of equipment, or within such longer period as may be Prescribed by law or by the terms of any applicable special guarantee required by the Contract Documents. Un-remedied defects identified for correction during the warranty period but remaining after its expiration shall be considered as part of the obligations of the warranty. Defects in material, workmanship, or equipment which are remedied as a result of obligations of the warranty shall subject the remedied portion of the work to an extended warranty period of 2 years after the defect has been remedied.

The Contractor further assumes responsibility for a similar guarantee for all work and materials provided by Subcontractors or manufacturers of packaged equipment components. The effective date for the start of the guarantee or warranty period for equipment qualifying as substantially complete is defined in Article SUBSTANTIAL COMPLETION, AND Article SUBSTANTIAL COMPLETION DATE, in these General Conditions.

The Contractor also agrees to hold the Owner and the Engineer harmless from liability of any kind arising from damage due to said defects. The Contractor shall make all repairs and replacements promptly upon receipt of written order for same from the Owner. If the Contractor fails to make the repairs and replacements promptly, or in an emergency where delay would cause serious risk, or loss, or damage, the Owner may have the defective work corrected or the rejected work removed and replaced, and the Contractor and his Surety shall be liable for the cost thereof.

PROGRESS OF THE WORK

52. BEGINNING OF THE WORK

Following execution of the Contract, the Contractor shall meet with the Owner and Engineer relative to his arrangements for prosecuting the work.

53. SCHEDULES AND PROGRESS REPORTS

Prior to starting the construction, the Contractor shall Prepare and submit to the Engineer, a Progress schedule showing the dates on which each part or division of the work is expected to be started and finished, and a Preliminary schedule for submittals. The Progress schedule for submittals shall be brought up to date and submitted to the Engineer at the end of each month or at such other times the Engineer may request.

The Contractor shall forward to the Engineer, at the end of each month, an itemized report of the delivery status of major and critical items of purchased equipment and material, including shop drawings and the status of shop and field fabricated work. These Progress reports shall indicate the date of the purchase order, the current percentage of completion, estimated delivery, and cause of delay, if any.

If the completion of any part of the work or the delivery of materials is behind the submitted Progress schedule, the Contractor shall submit in writing a plan acceptable to the Owner and Engineer for bringing the work up to schedule.

The Owner shall have the right to withhold Progress payments for the work if the Contractor fails to update and submit the Progress schedule and reports as specified.

54. PROSECUTION OF THE WORK

It is expressly understood and agreed that the time of beginning, rate of Progress, and time of completion of the work are the essence of this Contract. The work shall be prosecuted at such time, and in or on such part or parts of the Project as may be required, to complete the Project as contemplated in the Contract Documents and the Progress schedule.

If the Contractor desires to carry on work at night or outside the regular hours, he shall give timely notice to the Engineer to allow satisfactory arrangements to be made for observing the work in Progress.

55. OWNER'S RIGHT TO RETAIN IMPERFECT WORK

If any part or portion of the work completed under this Contract shall Prove defective and not in accordance with the Drawings and Specifications, and if the imperfection in the same shall not be of sufficient magnitude or importance as to make the work dangerous or unsuitable, or if the removal of such work will create conditions which are dangerous or undesirable, the Owner shall have the right and authority to retain such work but will make such deductions in the final payment therefore as may be just and reasonable.

56. OWNER'S RIGHT TO DO WORK

Should the Contractor neglect to Prosecute the work in conformance with the Contract Documents or neglect or refuse at his own cost to remove and replace work rejected by the Engineer, then the Owner may notify the Surety of the condition, and after 10 days' written notice to the Contractor and the Surety, or without notice if an emergency or danger to the work or public exists, and without Prejudice to any other right which the Owner may have under Contract, or otherwise, take over that portion of the work which has been improperly or non-timely executed, and make good the deficiencies and deduct the cost thereof from the payments then or thereafter due the Contractor.

57. OWNER'S RIGHT TO TRANSFER EMPLOYMENT

If the Contractor should abandon the work or if he should persistently or repeatedly refuse or should fail to make Prompt payment to Subcontractors for material or labor, or to persistently disregard laws, ordinances, or to Prosecute the work in

conformance with the Contract Documents, or otherwise be guilty of a substantial violation of any Provision of the Contract or any laws or ordinance, then the Owner may, without Prejudice to any other right or remedy, and after giving the Contractor and Surety 10 days' written notice, transfer the employment for said work from the Contractor to the Surety. Upon receipt of such notice, such Surety shall enter upon the Premises and take possession of all materials, tools, and appliances thereon for the purpose of completing the work included under this Contract and employ by Contract or otherwise, any qualified person or persons to finish the work and Provide the materials therefore, in accordance with the Contract Documents, without termination of the continuing full force and effect of this Contract. In case of such transfer of employment to such Surety, the Surety shall be paid in its own name on estimates according to the terms hereof without any right of the Contractor to make any claim for the same or any part thereof.

If, after the furnishing of said written notice to the Surety, the Contractor and the Surety still fail to make reasonable Progress on the performance of the work, the Owner may terminate the employment of the Contractor and take possession of the Premises and of all materials, tools, and appliances thereon and finish the work by whatever method he may deem expedient and charge the cost thereof to the Contractor and the Surety. In such case, the Contractor shall not be entitled to receive any further payment until the work is finished. If the expense of completing the Contract, including compensation for additional managerial and administrative services, shall exceed such unpaid balance, the Contractor and the Surety shall pay the difference to the Owner.

58. DELAYS AND EXTENSION OF TIME

If the Contractor is delayed in the Progress of the work by any act or neglect of the Owner or the Engineer, or by any separate Contractor employed by the Owner, or by strikes, lockouts, fire, adverse weather conditions not reasonably anticipated, or acts of Nature, and if the Contractor, within 48 hours of the start of the occurrence, gives written notice to the Owner of the cause of the potential delay and estimate of the possible time extension involved, and within 10 days after the cause of the delay has been remedied, the Contractor gives written notice to the Owner of any actual time extension requested as a result of the aforementioned occurrence, then the Contract time may be extended by change order for such reasonable time as the Engineer determines. It is agreed that no claim shall be made or allowed for any damages, loss, or expense which may arise out of any delay caused by the above referenced acts or occurrences other than claims for the appropriate extension of time. No extension of time will be granted to the Contractor for delays occurring to parts of the work that have no measurable impact on the completion of the total work under this Contract. No extension of time will be considered for weather conditions reasonably anticipated for the area in which the work is being performed. Reasonably anticipated weather conditions will be based on official records of monthly Precipitation and other historical data. Adverse weather conditions, if determined to be of a severity that would impact Progress of the work, may be considered as cause for an extension of Contract completion time.

Delays in delivery of equipment or material purchased by the Contractor or his Subcontractors, including Owner-selected equipment shall not be considered as a just cause for delay, unless the Owner determines that for good cause the delay is beyond the control of the Contractor. The Contractor shall be fully responsible for the timely ordering, scheduling, expediting, delivery, and installation of all equipment and materials.

Within a reasonable period after the Contractor submits to the Owner a written request for an extension of time, the Engineer will Present his written opinion to the Owner as to whether an extension of time is justified, and, if so, his recommendation as to the number of days for time extension. The Owner will make the final decision on all requests for extension of time.

59. DIFFERING SITE CONDITIONS

The Contractor shall promptly, and before the conditions are disturbed, give a written notice to the Owner and Engineer of:

A. subsurface or latent physical conditions at the site which differ materially from those indicated in this contract,

B. unknown physical conditions at the site, of an unusual nature, which differ materially from those ordinarily encountered and generally recognized as inherent in work of the character provided for in the Contract.

The Engineer will investigate the site conditions promptly after receiving the notice. If the conditions do materially so

differ and cause an increase or decrease in the Contractor's cost of, or the time required for, performing any part of the work under this Contract, whether or not changed as a result of the conditions, and equitable adjustment shall be made under this Article and the Contract modified in writing accordingly.

No request by the Contractor for an equitable adjustment to the Contract under this Article will be allowed, unless the Contractor has given the written notice required; Provided that the time prescribed above for giving written notice may be extended by the Owner.

No request by the Contractor for an equitable adjustment to the Contract for differing site conditions will be allowed if made after final payment under this Contract.

60. LIQUIDATED DAMAGES

Should the Contractor fail to complete the work, or any part thereof, in the time agreed upon in the Contract or within such extra time as may have been allowed for delays by extensions granted as Provided in the Contract, the Contractor shall reimburse the Owner for the additional expense and damage for each calendar day, Sundays and legal holidays included, that the Contract remains uncompleted after the Contract completion date. It is agreed that the amount of such additional expense and damage incurred by reason of failure to complete the work is the per-diem rate, as stipulated in the Proposal. The said amount is hereby agreed upon as a reasonable estimate of the costs, which may be accrued by the Owner after the expiration of the time of completion. It is expressly under- stood and agreed that this amount is not to be considered in the nature of a penalty, but as liquidated damages which have accrued against the Contractor. The Owner shall have the right to deduct such damages from any amount due, or that may become due the Contractor, or the amount of such damages shall be due and collectible from the Contractor or Surety.

61. OTHER CONTRACTS

The Owner reserves the right to let other Contracts in connection with the work. The Contractor shall afford other Contractors reasonable opportunity for the introduction and storage of their materials and the execution of their work and shall properly connect and coordinate his work with theirs.

If any part of the work under this Contract depends for Proper execution or results upon the work of any other Contractor, utility service company or Owner, the Contractor shall inspect and Promptly report to the Engineer in writing any patent or apparent defects to deficiencies in such work that render it unsuitable for such Proper execution and results. The Contractor's failure to so report shall constitute and acceptance of the work by others as being fit and Proper for integration with work under this Contract, except for latent or non-apparent defects and deficiencies in the work.

62. USE OF PREMISES

The Contractor shall confine his equipment, the storage of materials and the operation of his workers to limits shown on the Drawings or indicated by law, ordinances, permits, or directions of the Engineer, and shall not unreasonably encumber the Premises with his materials. The Contractor shall provide, at his own expense, the necessary rights-of-way and access to the work, which may be required outside the limits of the Owner's Property and shall furnish the Engineer copies of permits and agreements for use of the Property outside that provided by the Owner.

The Contractor shall not load nor permit any part of the structure to be loaded in any manner that will endanger the structure, nor shall Contractor subject any part of the work or adjacent Property to stresses or Pressures that will endanger it.

63. SUBSTANTIAL COMPLETION DATE

The Engineer may issue a written notice of substantial completion for the purpose of establishing the starting date for specific equipment guarantees, and to establish the date that the Owner will assume the responsibility for the cost of operating such equipment. Said notice shall not be considered as final acceptance of any portion of the work or relieve the Contractor from completing the remaining work within the specified time and in full compliance with the Contract Documents. See SUBSTANTIAL COMPLETION under DEFINITIONS of these General Conditions.

64. PERFORMANCE TESTING

Operating equipment and systems shall be performance tested in the Presence of the Engineer to demonstrate compliance with the specified requirements. Performance testing shall be conducted under the specified design operating conditions or under such simulated operating conditions as recommended or approved by the Engineer. Schedule such testing with the Engineer at least one week in advance of the planned date for testing.

65. OWNER'S USE OF PORTIONS OF THE WORK

Following issuance of the written notice of Substantial Completion, the Owner may initiate operation of the facility. Such use shall not be considered as final acceptance of any portion of the work, nor shall such use be considered as cause for an extension of the Contract completion time, unless authorized by a Change Order issued by the Owner.

66. CUTTING AND PATCHING

The Contractor shall do all cutting, fitting, or patching of his work that may be required to make its several parts come together Properly and fit it to receive or be received by work of other Contractors shown upon or reasonably implied by the Drawings.

67. CLEANING UP

The Contractor shall, at all times, keep Property on which work is in Progress and the adjacent Property free from accumulations of waste material or rubbish caused by employees or by the work. Upon completion of the construction, the Contractor shall remove all temporary structures, rubbish, and waste materials resulting from his operations.

PAYMENT

68. PAYMENT FOR CHANGE ORDERS

The Owner's request for quotations on alterations to the work shall not be considered authorization to proceed with the work prior to the issuance of a formal Change Order, nor shall such request justify any delay in existing work. Quotations for alterations to the work shall include substantiating documentation with an itemized breakdown of Contractor and Subcontractor costs, including labor, material, rentals, approved services, overhead, and profit. Owner may require detailed cost data in order to substantiate the reasonableness of the proposed costs.

Any compensation paid in conjunction with the terms of a Change Order shall comprise total compensation due the Contractor for the work or alteration defined in the Change Order. By signing the Change Order, the Contractor acknowledges that the stipulated compensation includes payment for the work or alteration plus all payment for the interruption of schedules, extended overhead, delay, or any other impact claim or ripple effect, and by such signing specifically waives any reservation or claim for additional compensation in respect to the subject Change Order.

At the Owner's option, payment or credit for any alterations covered by a Change Order shall be determined by one or a combination of the methods set forth in A, B, or C below, as applicable:

A. UNIT PRICES

Those unit Prices stipulated in the Proposal shall be utilized where they are applicable. In the event the Change Order results in a change in the original quantity that is materially and significantly different from the original bid quantity, a new unit Price shall be negotiated upon demand of either party. Unit Prices for new items included in the Change Order shall be negotiated and mutually agreed upon.

B. LUMP SUM

A total lump sum for the work negotiated and mutually acceptable to the Contractor and the Owner.

Lump sum quotations for modifications to the work shall include substantiating documentation with an itemized

breakdown of Contractor and Subcontractor costs, including labor, material, rentals, approved services, overhead, and Profit, all calculated as specified under "C" below.

C. COST REIMBURSEMENT WORK

The term "cost reimbursement" shall be understood to mean that payment for the work will be made on a time and expense basis, that is, on an accounting of the Contractor's forces, materials, equipment, and other items of cost as required and used to do the work.

If the method of payment cannot be agreed upon Prior to the beginning of the work, and the Owner directs by written Change Order that the work be done on a cost reimbursement basis, then the Contractor shall furnish labor, and furnish and install equipment and materials necessary to complete the work in a satisfactory manner and within a reasonable period of time. For the work performed, payment will be made for the documented actual cost of the following:

1. Labor including foremen for those hours they are assigned and participating in the cost reimbursement work (actual payroll cost, including wages, fringe benefits as established by negotiated labor agreements, labor insurance, and labor taxes as established by law). No other fixed labor burdens will be considered, unless approved in writing by the Owner.

2. Material delivered and used on the designated work, including sales tax, if paid by the Contractor or his Subcontractor.

3. Rental or equivalent rental cost of equipment, including necessary transportation for items having a value in excess of $100.

   Rental or equivalent rental cost will be allowed for only those days or hours during which the equipment is in actual use. Rental and transportation allowances shall not exceed the current rental rates prevailing in the locality. The rentals allowed for equipment will, in all cases, be understood to cover all fuel, supplies, repairs, and renewals, and no further allowances will be made for those items, unless specific agreement to that effect is made.

4. Additional bond, as required and approved by the owner.

5. Additional insurance (other than labor insurance) as required and approved by the Owner.

   In addition to items 1 through 5 above, an added fixed fee for general overhead and Profit shall be negotiated and allowed for the Contractor (or approved Subcontractor) actually executing the Cost Reimbursement work.

   An additional fixed fee shall be negotiated and allowed the Contractor for the administrative handling of portions of the work that are executed by an approved Subcontractor. No additional fixed fee will be allowed for the administrative handling of work executed by a Subcontractor of a Subcontractor, unless by written permission from the Owner.

The added fixed fees shall be considered to be full compensation, covering the cost of general supervision, overhead, Profit, and any other general expense. The Contractor's records shall make clear distinction between the direct costs of work paid for on a cost reimbursement basis and the costs of other work. The Contractor shall furnish the Engineer report sheets in duplicate of each day's cost reimbursement work no later than the working day following the performance of said work. The daily report sheets shall itemize the materials used, and shall cover the direct cost of labor and the charges for equipment rental, whether furnished by the Contractor, Subcontractor or other forces. The daily report sheets shall provide names or identifications and classifications of workers, the hourly rate of pay and hours worked, and also the size, type, and identification number of equipment and hours operated.

Material charges shall be substantiated by valid copies of vendors' invoices.. Such invoices shall be submitted with the daily report sheets, or, if not available, they shall be submitted with subsequent daily report sheets. Said daily report sheets shall be signed by the Contractor or his authorized agent.

The Owner reserves the right to furnish such materials and equipment as he deems expedient, and the Contractor shall have no claim for Profit or added fees on the cost of such materials and equipment. To receive partial payments and final payment for cost reimbursement work, the Contractor shall submit to the Engineer, detailed and complete documented verification of the Contractor's and any of his Subcontractors' actual costs involved in the cost reimbursement work. Such costs shall be submitted within 30 days after said work has been performed.

69. PARTIAL PAYMENTS

A. GENERAL

Nothing in this Article shall be construed to affect the right, hereby reserved, to reject the whole or any part of the aforesaid work, should such work be later found not to comply with the Provisions of the Contract Documents. All estimated quantities of work for which partial payments have been made are subject to review and correction on the final estimate. Payment by the Owner and acceptance by the Contractor of partial payments based on periodic estimates of quantities of work performed shall not, in any way, constitute acceptance of the estimated quantities used as a basis for computing the amounts of the partial payments.

B. ESTIMATE

At least 30 days before each Progress payment falls due, as specified in the Supplementary Conditions, the Contractor shall submit to the Engineer a detailed estimate of the amount earned during the Preceding month for the separate portions of the work, and request payment. As used in this Article, the words "amount earned" means the value, on the date of the estimate for partial payment, of the work completed in accordance with the Contract Documents, and the value of approved materials delivered to the Project site suitable stored and Protected Prior to incorporation into the work.

Engineer will, within 7 days after receipt of each request for payment, either indicate in writing a recommendation of payment and present the request to Owner, or return the request to Contractor indicating in writing Engineer's reasons for refusing to recommend payment. In the latter case, Contractor may, within 7 days, make the necessary corrections and resubmit the request.

Engineer may refuse to recommend the whole or any part of any payment if, in his opinion, it would be incorrect to make such representations to Owner. Engineer may also refuse to recommend any such payment, or, because of subsequently discovered evidence or the results of subsequent inspections or tests, nullify any such payment previously recommended to such an extent as may be necessary in Engineer's opinion to protect the Owner from loss because:

1. The work is defective, or completed work has been damaged requiring correction or replacement;

2. Written claims have been made against Owner or Liens have been filed in connection with the work;

3. The Contract Price has been reduced because of Change Orders;

4. Owner has been required to correct defective work or complete the work in accordance with Article OWNER'S RIGHT TO DO WORK;

5. Of Contractor's unsatisfactory Prosecution of the work in accordance with the Contract Documents; or

6. Contractor's failure to make payment to Subcontractors or for labor, materials, or equipment.

C. DEDUCTION FROM ESTIMATE

Unless modified in the Supplementary Conditions, deductions from the estimate will be as described below:
The Owner will deduct from the estimate, and retain as part security, 10 percent of the amount earned for work satisfactorily completed. A deduction and retainage of 10 percent will be made on the estimated amount earned for approved items of material delivered to and properly stored at the jobsite but not incorporated into the work. When the work is 50 percent complete, the Owner may reduce the retainage to 5 percent of the dollar value of all work satisfactorily

completed to date provided the Contractor is making satisfactory progress and there is no specific cause for a greater retainage. The Owner may reinstate the retainage up to 10 percent if the Owner determines, at his discretion, that the Contractor is not making satisfactory Progress or where there is other specific cause for such withholding.

D. QUALIFICATION FOR PARTIAL PAYMENT FOR MATERIALS DELIVERED

Unless modified in the Supplementary Conditions, qualification for partial payment for materials delivered but not yet incorporated into the work shall be as described below:

1. Materials, as used herein, shall be considered to be those items which are fabricated and manufactured material and equipment. No consideration shall be given to individual purchases of less than $200 for any one item.

2. To receive partial payment for materials delivered to the site, but not incorporated in the work, it shall be necessary for the Contractor to include a list of such materials on the Partial Payment Request. At his sole discretion, the Engineer may approve items for which partial payment is to be made. Partial payment shall be based on the Contractor's actual cost for the materials as evidenced by invoices from the supplier. Proper storage and Protection shall be provided by the Contractor, and as approved by the Engineer. Final payment shall be made only for materials actually incorporated in the work and, upon acceptance of the work, all materials remaining for which advance payments had been made shall revert to the Contractor, unless otherwise agreed, and partial payments made for these items shall be deducted from the final payment for the work.

3. Contractor warrants and guarantees that title to all work, materials, and equipment covered by any Application for Payment, whether incorporated in the Project or not, will pass to Owner at the time of payment free and clear of all liens, claims, security interests, and encumbrances.

4. If requested by the Engineer, the Contractor shall provide, with subsequent pay requests, invoices receipted by the supplier showing payment in full has been made.

E. PAYMENT

After deducting the retainage and the amount of all Previous partial payments made to the Contractor from the amount earned, the amount due will be made payable to the Contractor. Recommendations for payment received by the Owner less than 9 days Prior to the scheduled day for payment will not be Processed or paid until the following month.

70. CLAIMS FOR EXTRA WORK

In any case where the Contractor deems additional time or compensation will become due him under this Contract for circumstances other than those defined in Article DELAYS AND EXTENSION OF TIME, the Contractor shall notify the Engineer, in writing, of his intention to make claim for such time or compensation before he begins the work on which he bases the claim, in order that such matters may be settled, if possible, or other appropriate action taken. The notice of claim shall be in duplicate, in writing, and shall state the circumstances and the reasons for the claim, but need not state the amount. If such notification is not given or if the Engineer is not afforded Proper facilities by the Contractor for keeping strict account of actual cost, then the Contractor hereby agrees to waive the claim for such additional time or compensation. Such notice by the Contractor, and fact that the Engineer has kept account of the cost as aforesaid, shall not in any way be construed as Proving the validity of the claim.

No extension of time will be granted to the Contractor for delays resulting from extra work that have no measurable impact on the completion of the total Work under this Contract. Claims for additional time or compensation shall be made in itemized detail and submitted, in writing, to the Owner and Engineer within 10 days following completion of that portion of the work for which the Contractor bases his claim. Failure to make the claim for additional compensation in the manner and within the time specified above shall constitute waiver of that claim. In case the claim is found to be just, it shall be allowed and paid for as provided in Article PAYMENT FOR CHANGE ORDERS.

71. RELEASE OF LIENS OR CLAIMS

The Contractor shall indemnify and hold harmless the Owner from all claims for labor and materials furnished under this Contract. Prior to the final payment, the Contractor shall furnish to the Owner, as part of his final payment request, a certification that all of the Contractor's obligations on the Project have been satisfied and that all monetary claims and indebtedness have been paid. The Contractor shall furnish complete and legal effective releases or waivers, satisfactory to the Owner, of all liens arising out of or filed in connection with the work.

72. FINAL PAYMENT

Upon completion of all the work under this Contract, the Contractor shall notify the Engineer, in writing, that he has completed his part of the Contract and shall request final payment. Upon receipt of such notice the Engineer will inspect and, if acceptable, submit to the Owner his recommendation as to acceptance of the completed work and as to the final estimate of the amount due the Contractor. Upon approval of this final estimate by the Owner and compliance by the Contractor with Provisions in Article **RELEASE OF LIENS OR CLAIMS,** and other Provisions as may be applicable, the Owner shall pay to the Contractor all monies due him under the Provisions of these Contract Documents.

73. NO WAIVER OF RIGHTS

Neither the inspection by the Owner, through the Engineer or any of his employees, nor any order by the Owner for payment of money, nor any payment for, or acceptance of, the whole or any part of the work by the Owner or Engineer, nor any extension of time, nor any possession taken by the owner or its employees, shall operate as a waiver of any Provision of this Contract, or any power herein reserved to the Owner, or any right to damages herein Provided, nor shall any waiver of any breach in this Contract be held to be a waiver of any other or subsequent breach. Acceptance or final payment shall not be final and conclusive with regards to latent defects, fraud, or such gross mistakes as may amount to fraud, or as regards the Owner's rights under the warranty.

74. ACCEPTANCE OF FINAL PAYMENT CONSTITUTES RELEASE

The acceptance by the Contractor of the final payment shall release the Owner and the Engineer, as representatives of the Owner, from all claims and all liability to the Contractor for all things done or furnished in connection with the work, and every act of the Owner and others relating to or arising out of the work except claims Previously made in writing and still unsettled. No payment, however, final or otherwise, shall operate to release the Contractor or his Sureties from obligations under this Contract and the Performance Bond, Payment Bond, and other bonds and warranties, as herein provided.

SUPPLEMENTARY CONDITIONS

REVISIONS AND ADDITIONS TO THE GENERAL CONDITIONS

The General Conditions are hereby revised as follows:

ARTICLE 9 "ENGINEER"

Add the following:

Wherever in these Documents the word "Engineer" appears, it shall be understood to mean the City Engineer or his/her authorized representative, who will perform the Contract administrative and field inspections as authorized agents of the Owner.

ARTICLE 12 "OWNER"

Add the following:

Wherever in these Documents the word "Owner" appears, it shall be understood to mean the City of Key West whose address is 3140 Flagler Avenue, P.O. Box 1409, Key West, Florida 33041-1409.

ARTICLE 14 "SPECIFICATIONS"

Add the following:

FEDERAL, STATE, COUNTY, AND LOCAL STANDARD SPECIFICATIONS

Where portions of the work traverse or cross federal, state, county, or local highways, roads, or streets, and the agency in control of such Property has established standard specifications governing items of work that differ from these Specifications, the most stringent requirements shall apply.

The Contractor shall comply with all regulations and requirements of the Florida Department of Transportation and the County Road Department wherever the work traverses or crosses state or county highways.

ARTICLE 29 "LINES AND GRADES"

Add the following:

It will be the Contractor's responsibility to layout the work and to transfer elevations from benchmarks. Where new construction connects to existing facilities, the Contractor shall check and establish the exact location prior to construction of the facilities.

The Contractor shall furnish all surveys, labor, and equipment, including setting all alignment and gradient, grade stakes, batter boards, and everything necessary to lay out his work. The Contractor shall be responsible for maintaining and re-establishing at his expense, all control points. After completion of his construction, he shall reset all permanent monuments at their original locations and elevations through the use of registered surveys.

Layout work may be checked by the Engineer, and the Contractor shall furnish all necessary labor, equipment, and materials, and shall cooperate and assist the Engineer in making such checks.

The dimensions for lines and elevations for grades of the structures, appurtenances, and utilities will be shown on Drawings attached to each Work Order, together with other pertinent information required for laying out the work. If site conditions vary from those indicated, the Contractor shall notify the Engineer immediately, who will make any minor adjustment as required.

ARTICLE 34 "INSURANCE & LIABILITY"

Contractor shall maintain limits no less than those stated below:

CONTRACTOR is to secure, pay for, and file with the City of Key West, prior to commencing any work under the Contract, all certificates for workers' compensation, public liability, and property damage liability insurance, and such other insurance coverages as may be required by specifications and addenda thereto, in at least the following minimum amounts with specification amounts to prevail if greater than minimum amounts indicated. Notwithstanding any other provision of the Contract, the CONTRACTOR shall provide the minimum limits of liability insurance coverage as follows:

Auto Liability	$1,000,000	Combined Single Limit
General Liability	$2,000,000	Aggregate (Per Project)
	$2,000,000	Products Aggregate
	$1,000,000	Any One Occurrence
	$2,000,000	Personal Injury
	$ 300,000	Fire Damage/Legal
Additional Umbrella Liability	$2,000,000	Occurrence / Aggregate

CONTRACTOR shall furnish an original Certificate of Insurance indicating, and such policy providing coverage to, City of Key West named as an additional insured on a PRIMARY and NON CONTRIBUTORY basis utilizing an ISO standard endorsement at least as broad as CG 2010 (11/85) or its equivalent, (combination of CG 20 10 07 04 and CG 20 37 07 04, providing coverage for completed operations, is acceptable) including a waiver of subrogation clause in favor of City of Key West on all policies. CONTRACTOR will maintain the General Liability and Umbrella Liability insurance coverages summarized above with coverage continuing in full force including the additional insured endorsement until at least 3 years beyond completion and delivery of the work contracted herein.

Notwithstanding any other provision of the Contract, the CONTRACTOR shall maintain complete workers' compensation coverage for each and every employee, principal, officer, representative, or agent of the CONTRACTOR who is performing any labor, services, or material under the Contract. Further, CONTRACTOR shall additionally maintain the following minimum limits of coverage:

Bodily Injury Each Accident	$1,000,000
Bodily Injury by Disease Each Employee	$1,000,000
Bodily Injury by Disease Policy Limit	$1,000,000

If the work is being done on or near a navigable waterway, CONTRACTOR's workers compensation policy shall be endorsed to provide USL&H Act (WC 00 01 06 A) and Jones Act (WC 00 02 01 A) coverage if specified by the City of Key West. CONTRACTOR shall provide the City of Key West with a Certificate of Insurance verifying compliance with the workman's compensation coverage as set forth herein and shall provide as often as required by the City of Key West such certification which shall also show the insurance company, policy number, effective and expiration date, and the limits of workman's compensation coverage under each policy.

CONTRACTOR's insurance policies shall be endorsed to give 30 days' written notice to the City of Key West in the event of cancellation or material change, using form CG 02 24, or its equivalent.

Certificates of Insurance submitted to the City of Key West will not be accepted without copies of the endorsements being requested. This includes additional insured endorsements, cancellation/material change notice endorsements, and waivers of subrogation. Copies of USL&H Act and Jones Act endorsements will also be required if necessary. PLEASE ADVISE YOUR INSURANCE AGENT ACCORDINGLY.

CONTRACTOR will comply with any and all safety regulations required by any agency or regulatory body including but not limited to OSHA. CONTRACTOR will notify City of Key West immediately by telephone at (305) 809-3867 any accident or injury to anyone that occurs on the jobsite and is related to any of the work being performed by the CONTRACTOR.

Add the following Article:

G. SURETY AND INSURER QUALIFICATIONS

All bonds, insurance contracts, and certificates of insurance shall be either executed by or countersigned by a licensed resident agent of the Surety or insurance company, having his place of business in the State of Florida, and in all ways complying with the insurance laws of the State of Florida. Further, the said Surety or Insurance Company shall be duly licensed and qualified to do business in the State of Florida. If requested, Contractor shall Provide Proof of Florida Licensure for all insurance companies. The City of Key West shall be named as Additional Insured on the insurance certificates.

ACORD™ CERTIFICATE OF LIABILITY INSURANCE

DATE (MM/DD/YYYY)

THIS CERTIFICATE IS ISSUED AS A MATTER OF INFORMATION ONLY AND CONFERS NO RIGHTS UPON THE CERTIFICATE HOLDER. THIS CERTIFICATE DOES NOT AFFIRMATIVELY OR NEGATIVELY AMEND, EXTEND OR ALTER THE COVERAGE AFFORDED BY THE POLICIES BELOW. THIS CERTIFICATE OF INSURANCE DOES NOT CONSTITUTE A CONTRACT BETWEEN THE ISSUING INSURER(S), AUTHORIZED REPRESENTATIVE OR PRODUCER, AND THE CERTIFICATE HOLDER.

IMPORTANT: If the certificate holder is an ADDITIONAL INSURED, the policy(ies) must be endorsed. If SUBROGATION IS WAIVED, subject to the terms and conditions of the policy, certain policies may require an endorsement. A statement on this certificate does not confer rights to the certificate holder in lieu of such endorsement(s).

PRODUCER	CONTACT NAME:	
	PHONE (A/C, No, Ext):	FAX (A/C, No):
	E-MAIL ADDRESS:	
	INSURER(S) AFFORDING COVERAGE	NAIC #
	INSURER A :	
INSURED **Vendor Sample**	INSURER B :	
	INSURER C :	
	INSURER D :	
	INSURER E :	
	INSURER F :	

COVERAGES **CERTIFICATE NUMBER:** **REVISION NUMBER:**

THIS IS TO CERTIFY THAT THE POLICIES OF INSURANCE LISTED BELOW HAVE BEEN ISSUED TO THE INSURED NAMED ABOVE FOR THE POLICY PERIOD INDICATED. NOTWITHSTANDING ANY REQUIREMENT, TERM OR CONDITION OF ANY CONTRACT OR OTHER DOCUMENT WITH RESPECT TO WHICH THIS CERTIFICATE MAY BE ISSUED OR MAY PERTAIN, THE INSURANCE AFFORDED BY THE POLICIES DESCRIBED HEREIN IS SUBJECT TO ALL THE TERMS, EXCLUSIONS AND CONDITIONS OF SUCH POLICIES. LIMITS SHOWN MAY HAVE BEEN REDUCED BY PAID CLAIMS.

INSR LTR	TYPE OF INSURANCE	ADDL INSR	SUBR WVD	POLICY NUMBER	POLICY EFF (MM/DD/YYYY)	POLICY EXP (MM/DD/YYYY)	LIMITS	
	GENERAL LIABILITY						EACH OCCURRENCE	$1,000,000
	X COMMERCIAL GENERAL LIABILITY						DAMAGE TO RENTED PREMISES (Ea occurrence)	$300,000
	CLAIMS-MADE X OCCUR	X	X				MED EXP (Any one person)	$
							PERSONAL & ADV INJURY	$1,000,000
							GENERAL AGGREGATE	$2,000,000
	GEN'L AGGREGATE LIMIT APPLIES PER: POLICY PRO-JECT LOC						PRODUCTS - COMP/OP AGG	$2,000,000
								$
	AUTOMOBILE LIABILITY						COMBINED SINGLE LIMIT (Ea accident)	$1,000,000
	X ANY AUTO						BODILY INJURY (Per person)	$
	ALL OWNED AUTOS / SCHEDULED AUTOS	X	X				BODILY INJURY (Per accident)	$
	X HIRED AUTOS / X NON-OWNED AUTOS						PROPERTY DAMAGE (Per accident)	$
								$
	X UMBRELLA LIAB X OCCUR						EACH OCCURRENCE	$,000,000
	EXCESS LIAB CLAIMS-MADE	X	X				AGGREGATE	$,000,000
	DED X RETENTION $							$
	WORKERS COMPENSATION AND EMPLOYERS' LIABILITY						X WC STATU-TORY LIMITS / OTH-ER	
	ANY PROPRIETOR/PARTNER/EXECUTIVE OFFICER/MEMBER EXCLUDED? Y/N N (Mandatory in NH) If yes, describe under DESCRIPTION OF OPERATIONS below	N/A	X				E.L. EACH ACCIDENT	$1,000,000
							E.L. DISEASE - EA EMPLOYEE	$1,000,000
							E.L. DISEASE - POLICY LIMIT	$1,000,000
	Professional Liability (if applicable)						**Per Claim**	$1,000,000
							Aggregate	$1,000,000

DESCRIPTION OF OPERATIONS / LOCATIONS / VEHICLES (Attach ACORD 101, Additional Remarks Schedule, if more space is required)

CERTIFICATE HOLDER

City of Key West
P.O. Box 1409
Key West, FL 33041-1409

CANCELLATION

SHOULD ANY OF THE ABOVE DESCRIBED POLICIES BE CANCELLED BEFORE THE EXPIRATION DATE THEREOF, NOTICE WILL BE DELIVERED IN ACCORDANCE WITH THE POLICY PROVISIONS.

AUTHORIZED REPRESENTATIVE

© 1988-2010 ACORD CORPORATION. All rights reserved.

THIS ENDORSEMENT CHANGES THE POLICY. PLEASE READ IT CAREFULLY.

ADDITIONAL INSURED – OWNERS, LESSEES OR CONTRACTORS – AUTOMATIC STATUS WHEN REQUIRED IN CONSTRUCTION AGREEMENT WITH YOU

This endorsement modifies insurance provided under the following:

COMMERCIAL GENERAL LIABILITY COVERAGE PART

A. **Section II – Who Is An Insured** is amended to include as an additional insured any person or organization for whom you are performing operations when you and such person or organization have agreed in writing in a contract or agreement that such person or organization be added as an additional insured on your policy. Such person or organization is an additional insured only with respect to liability for "bodily injury", "property damage" or "personal and advertising injury" caused, in whole or in part, by:

1. Your acts or omissions; or
2. The acts or omissions of those acting on your behalf;

in the performance of your ongoing operations for the additional insured.

A person's or organization's status as an additional insured under this endorsement ends when your operations for that additional insured are completed.

B. With respect to the insurance afforded to these additional insureds, the following additional exclusions apply:

This insurance does not apply to:

1. "Bodily injury", "property damage" or "personal and advertising injury" arising out of the rendering of, or the failure to render, any professional architectural, engineering or surveying services, including:
   a. The preparing, approving, or failing to prepare or approve, maps, shop drawings, opinions, reports, surveys, field orders, change orders or drawings and specifications; or
   b. Supervisory, inspection, architectural or engineering activities.
2. "Bodily injury" or "property damage" occurring after:
   a. All work, including materials, parts or equipment furnished in connection with such work, on the project (other than service, maintenance or repairs) to be performed by or on behalf of the additional insured(s) at the location of the covered operations has been completed; or
   b. That portion of "your work" out of which the injury or damage arises has been put to its intended use by any person or organization other than another contractor or subcontractor engaged in performing operations for a principal as a part of the same project.

© ISO Properties, Inc., 2004

POLICY NUMBER:

COMMERCIAL GENERAL LIABILITY
CG 20 10 07 04

THIS ENDORSEMENT CHANGES THE POLICY. PLEASE READ IT CAREFULLY.

ADDITIONAL INSURED – OWNERS, LESSEES OR CONTRACTORS – SCHEDULED PERSON OR ORGANIZATION

This endorsement modifies insurance provided under the following:

COMMERCIAL GENERAL LIABILITY COVERAGE PART

SCHEDULE

Name Of Additional Insured Person(s) Or Organization(s):	Location(s) Of Covered Operations
Information required to complete this Schedule, if not shown above, will be shown in the Declarations.	

A. **Section II – Who Is An Insured** is amended to include as an additional insured the person(s) or organization(s) shown in the Schedule, but only with respect to liability for "bodily injury", "property damage" or "personal and advertising injury" caused, in whole or in part, by:

1. Your acts or omissions; or
2. The acts or omissions of those acting on your behalf;

in the performance of your ongoing operations for the additional insured(s) at the location(s) designated above.

B. With respect to the insurance afforded to these additional insureds, the following additional exclusions apply:

This insurance does not apply to "bodily injury" or "property damage" occurring after:

1. All work, including materials, parts or equipment furnished in connection with such work, on the project (other than service, maintenance or repairs) to be performed by or on behalf of the additional insured(s) at the location of the covered operations has been completed; or
2. That portion of "your work" out of which the injury or damage arises has been put to its intended use by any person or organization other than another contractor or subcontractor engaged in performing operations for a principal as a part of the same project.

© ISO Properties, Inc., 2004

POLICY NUMBER:

COMMERCIAL GENERAL LIABILITY
CG 20 37 07 04

THIS ENDORSEMENT CHANGES THE POLICY. PLEASE READ IT CAREFULLY.

ADDITIONAL INSURED – OWNERS, LESSEES OR CONTRACTORS – COMPLETED OPERATIONS

This endorsement modifies insurance provided under the following:

COMMERCIAL GENERAL LIABILITY COVERAGE PART

SCHEDULE

Name Of Additional Insured Person(s) Or Organization(s):	Location And Description Of Completed Operations
Information required to complete this Schedule, if not shown above, will be shown in the Declarations.	

Section II – Who Is An Insured is amended to include as an additional insured the person(s) or organization(s) shown in the Schedule, but only with respect to liability for "bodily injury" or "property damage" caused, in whole or in part, by "your work" at the location designated and described in the schedule of this endorsement performed for that additional insured and included in the "products-completed operations hazard".

© ISO Properties, Inc., 2004

THIS ENDORSEMENT CHANGES THE POLICY. PLEASE READ IT CAREFULLY.

EARLIER NOTICE OF CANCELLATION PROVIDED BY US

Number of Days Notice 30

For any statutorily permitted reason **other than nonpayment of premium**, the number of days required for notice of cancellation is increased to the number of days shown in the Schedule above.

If this policy is cancelled by us we will send the Named Insured and any party listed in the following schedule notice of cancellation based on the number of days notice shown above.

Schedule

Name of Person or Organization

Mailing Address

POLICY NUMBER:

COMMERCIAL GENERAL LIABILITY
CG 24 04 05 09

WAIVER OF TRANSFER OF RIGHTS OF RECOVERY AGAINST OTHERS TO US

This endorsement modifies insurance provided under the following:

COMMERCIAL GENERAL LIABILITY COVERAGE PART
PRODUCTS/COMPLETED OPERATIONS LIABILITY COVERAGE PART

SCHEDULE

Name Of Person Or Organization:
Information required to complete this Schedule, if not shown above, will be shown in the Declarations.

The following is added to Paragraph **8. Transfer Of Rights Of Recovery Against Others To Us** of **Section IV – Conditions:**

We waive any right of recovery we may have against the person or organization shown in the Schedule above because of payments we make for injury or damage arising out of your ongoing operations or "your work" done under a contract with that person or organization and included in the "products-completed operations hazard". This waiver applies only to the person or organization shown in the Schedule above.

© Insurance Services Office, Inc., 2008

WAIVER OF OUR RIGHT TO RECOVER FROM OTHERS ENDORSEMENT

We have the right to recover our payments from anyone liable for an injury covered by this policy. We will not enforce our right against the person or organization named in the Schedule. (This agreement applies only to the extent that you perform work under a written contract that requires you to obtain this agreement from us.)

This agreement shall not operate directly or indirectly to benefit anyone not named in the Schedule.

Schedule

This endorsement changes the policy to which it is attached and is effective on the date issued unless otherwise stated.

(The information below is required only when this endorsement is issued subsequent to preparation of the policy.)

Endorsement
Insured

Effective Policy No.

Endorsement No.
Premium

Insurance Company

Countersigned by_____

© 1983 National Council on Compensation Insurance.

ARTICLE 35 "INDEMNITY"

Delete Text for Article 35 "INDEMNITY" in its entirety and substitute the following:

To the fullest extent permitted by law, the CONTRACTOR expressly agrees to indemnify and hold harmless the City of Key West, their officers, directors, agents, and employees (herein called the "indemnitees") from liabilities, damages, losses and costs, including, but not limited to, reasonable attorney's fees and court costs, such legal expenses to include costs incurred in establishing the indemnification and other rights agreed to in this Paragraph, to persons or property, to the extent caused by the negligence, recklessness, or intentional wrongful misconduct of the CONTRACTOR, its Subcontractors or persons employed or utilized by them in the performance of the Contract. Claims by indemnitees for indemnification shall be limited to the amount of CONTRACTOR's insurance or $1 million per occurrence, whichever is greater. The parties acknowledge that the amount of the indemnity required hereunder bears a reasonable commercial relationship to the Contract and it is part of the project specifications or the bid documents, if any. The indemnification obligations under the Contract shall not be restricted in any way by any limitation on the amount or type of damages, compensation, or benefits payable by or for the CONTRACTOR under workers' compensation acts, disability benefits acts, or other employee benefits acts, and shall extend to and include any actions brought by or in the name of any employee of the CONTRACTOR or of any third party to whom CONTRACTOR may subcontract a part or all of the Work. This indemnification shall continue beyond the date of completion of the work.

ARTICLE 39 "CODES, ORDINANCES, PERMITS, AND LICENSES"

Add the following:

A. PERMIT FOR WORK WITHIN LOCAL RIGHTS-OF-WAY

For each Work Order issued, the Contractor shall obtain from the City of Key West the necessary permits for work within the rights-of-way. The Contractor shall abide by all regulations and conditions, including maintenance of traffic. Permit fees will be waived by the City for work within the City's rights-of way.

B. NOISE ORDINANCE

City of Key West has a noise ordinance that allows working hours between 8:00 AM to 7:00 PM, Monday through Friday. No work should be performed during weekends or City Holidays, State Holidays and National Holidays. Any construction operations outside these hours and these days will require a variance from the City of Key West Commission.

C. "LICENSES"

THE BIDDER MUST BE A LICENSED CONTRACTOR BY THE STATE OF FLORIDA AND SUBMIT PROOF OF SUCH WITH THE BID.

1. Within 10 days of Notice of Award, the successful Bidder must represent that he holds all applicable, county, and City of Key West licenses and permits required to

do business as a contractor with respect to the work described in the Contract Documents.

2. Further, the successful Bidder must, within 10 days of Notice of Award, furnish documentation showing that, as a minimum, he has complied with the provisions of Chapter 18 of the Code of Ordinances of the City of Key West in order to enter into the Agreement contained in the Contract Documents.

3. Specifically, within 10 days after Notice of Award, the successful Bidder must demonstrate that he holds, as a minimum, the following licenses and certificates:

   a.) City of Key West Tax License Receipt;
   b.) A valid Certificate of Competency issued by the Chief Building Official of Key West, Florida
   c.) A valid occupational license issued by the City of Key West, Florida.

D. WORK DURING HOLIDAYS

There shall be no work during City Holidays, State Holidays and National Holidays. Any construction operations during these days shall be approved by the City of Key West.

ARTICLE 40 "SUPERENTENDENCE"

Add the following sub article:

The CONTRACTOR shall keep at the project site, competent supervisory personnel, able to read, write and speak English to effectively communicate with City staff.

ARTICLE 42 "SAFETY"

Add the following sub article:

OCCUPATIONAL SAFETY AND HEALTH

The Contractor shall observe and comply with all applicable local, state, and federal occupational safety and health regulations during the prosecution of work under this Contract. In addition, full compliance by the Contractor with the U.S. Department of Labor's Occupational Safety and Health Standards, as established in Public Law 91-596, will be required under the terms of this Contract.

ARTICLE 43 "PROTECTION OF WORK AND PROPERTY"

Add the following Article:

HISTORIC PRESERVATION

The Contractor shall comply with Florida's Archives and Historic Act (Florida Statutes, Chapter 267) and the regulations of the local historic preservation board as applicable and protect against the potential loss or destruction of significant historical or archaeological data, sites, and properties in connection with the project.

ARTICLE 57 "OWNERS RIGHT TO TRANSFER EMPLOYMENT"

Add the following Article:

TERMINATION FOR CONVENIENCE AND RIGHT OF SUSPENSION

A. Owner shall have the right to terminate this Contract without cause by written notice of Termination to the Contractor. In the event of such termination for convenience, the Contractor's recovery against the Owner shall be limited to that portion of the Contract amount earned through the date of termination, together with any retainage withheld and reasonable termination expenses incurred. Contractor shall not be entitled to any other or further recovery against the Owner, including, but not limited to, damages or any anticipated profit on portions of the Work not performed.

B. The Owner shall have the right to suspend all or any portions of the Work upon giving the Contractor prior written notice of such suspension. If all or any portion of the Work is so suspended, the Contractor shall be entitled to reasonable costs, expenses and time extension associated with the suspension.

ARTICLE 60 "LIQUIDATED DAMAGES"

Delete Article "LIQUIDATED DAMAGES" in its entirety and substitute the following:
LIQUIDATED DAMAGES

Should the Contractor fail to complete the work or any part thereof (e.g., individual Work Order) in the time agreed upon in the Contract Documents or within such extra time as may have been allowed for delays by extensions granted as provided in the Contract, the Contractor shall reimburse the Owner for the additional expense and damage for each calendar day, Sundays and legal holidays included, that project outlined in Contract Documents remains uncompleted after the completion date. Liquidated damages shall be assessed. It is agreed that the amount of such additional expense and damage incurred by reason of failure to complete the work is the per diem rate as stipulated in the Proposal. The said amount is hereby agreed upon as a reasonable estimate of the costs which may be accrued by the Owner after the expiration of the time of completion. It is expressly understood and agreed that this amount is not to be considered in the nature of a penalty but as liquidated damages, which have accrued against the Contractor. The Owner shall have the right to deduct such damages from

any amount due or that may become due the Contractor or the amount of such damages shall be due and collectible from the Contractor or Surety.

ARTICLE 68 "PAYMENT"

Sub article C. "COST REIMBURSEMENT WORK"

Delete the third & fourth paragraph in its entirety & substitute the following;

In addition to 1 through 5 above , an added fixed fee of 15 percent (%) for general overhead & profit shall be allowed for the CONTRACTOR (or approved SUBCONTRACTOR) actually executing the Cost Reimbursement work.

An additional fixed fee of 5 % will be allowed the CONTRACTOR for the administrative handling of portions of the work that are executed by an approved SUBCONTRACTOR. No additional fixed fee will be allowed for the administrative handling of work executed by the SUBCONTRACTOR of a SUBCONTRACTOR.

ARTICLE 69 "PARTIAL PAYMENTS"

Delete the first paragraph of Sub article B. "ESTIMATE" and substitute the following:

No more than once each month the Contractor shall submit to the Engineer a detailed estimate of the amount earned during the preceding month for the separate portions of the work and request payment. As used in this Article the words "amount earned" means the value, on the date of the estimate, for partial payment of the work completed in accordance with the Contract Documents and the value of approved materials delivered to the project site suitably stored and protected prior to incorporation into the work. Payment will be made by the Owner to the Contractor within 40 days receipt of the written recommendation of payment from the Engineer.

Sub Article C. "DEDUCTION FROM ESTIMATE

Delete fourth sentence in its entirety and substitute add the following;

1. The OWNER shall hold retainage for an individual Work Order until such time as work associated with that Work Order is deemed complete by the OWNER.

Delete Sub article E. "PAYMENT" in its entirety and substitute the following:

After deducting the retainage and the amount of all previous partial payments made to the Contractor from the amount earned the amount due will be made payable to the Contractor. Recommendations for payment received by the Owner less than 40 days prior to the scheduled day for payment will not be processed or paid until the following month.

ARTICLE 72 "FINAL PAYMENT"

Delete Article "FINAL PAYMENT" in its entirety and substitute the following:

FINAL PAYMENT

Upon completion of the an individual Work Order, the Contractor shall notify the Engineer, in writing, that he has completed it and shall request final payment for that Work Order. The Contractor shall be responsible for keeping an accurate and detailed record of his actual construction. Upon completion of construction and before final acceptance and payment the Contractor shall furnish the Engineer as-built drawings of his construction. Upon receipt of a request for final payment and the as-built drawings the Engineer will inspect and, if acceptable, submit to the Owner his recommendation as to acceptance of the completed work and as to the final estimate of the amount due the Contractor. Upon approval of this final estimate by the Owner and compliance by the Contractor with provisions in Article RELEASE OF LIENS OR CLAIMS, and other provisions as may be applicable, the Owner shall pay to the Contractor all monies due him under the provisions of these Contract Documents.

* * * * * *

PART 4

SPECIFICATIONS

DIVISION 1

GENERAL REQUIREMENTS

SECTION 01001
GENERAL REQUIREMENTS

PART 1 - GENERAL

1.1 PROJECT DESCRIPTION

A. The following information though not all-inclusive, is given to assist Contractors in the evaluation of the work required to meet the project objectives.

B. A brief description of the work is stated in the Invitation to Bid. To determine the full scope of the project or of any particular part of the project, coordinate the applicable information in the several parts of these Contract Documents.

C. Individual project assignments shall be in accordance with Work Orders approved by the City and issued for the specific project. Work Order costs will be based on agreed upon estimates of quantities and unit prices included in the Bid Proposal. Each Work Order shall include a project duration for basis of Liquid Damages assessment.

1.2 FDOT SPECIFICATIONS

A. Portions of The Florida Department of Transportation (FDOT) Standard Specifications for Road and Bridge Construction and their Roadway and Traffic Design Standards, hereinafter referred to as the DOT Specifications, are referred to herein and amended, in part, and the same are hereby made a part of this Contract to the extent of such references and shall be as binding upon the Contract as though reproduced herein. Such reference shall mean the current edition, including all supplements. In case of a conflict in the requirements of the DOT Specifications and the requirements stated herein, the requirements herein shall prevail.

1.3 MOBILIZATION AND DEMOBILIZATION

A. Contractor shall be responsible for mobilization and demobilization of labor, materials and equipment. Payment for mobilization and demobilization will be included in the unit price indicated in the BID.

B. DAILY REPORTS
   1) The CONTRACTOR shall submit daily reports of construction activities for each site, including non-work days. The report shall include:
      a) Manpower, number of men by craft
      b) Quality Control
      c) Equipment on the Project
      d) Major deliveries
      e) Activities worked with reference to the Work Order items
      f) New problems
      g) Other pertinent information
   2) A similar report shall be submitted for/by each Subcontractor.
   3) The reports shall be submitted to the ENGINEER each month.

1.4 SCHEDULING

A. Plan the work and carry it out with minimum interference to the operation of the existing facilities. Prior to starting the work, confer with the Engineer and Owner's representative to develop an approved work schedule, which will permit the facilities to function as normally as practical. It may be necessary to do certain parts of the work outside normal working hours in order to avoid undesirable conditions. The Contractor shall do this work at such times and at no additional cost to the Owner.

B. SPECIAL EVENTS: Contractor may be asked to stop work during special events. No work will be allowed for intersections (TBD) on days corresponding to the events and schedule listed below. All material and equipment shall be totally off all streets by 5:00 P.M. the day before these dates:

No work on roads and streets shall be allowed to interfere with polling locations open on election days. Monroe County Precincts (as of June 2012)

PRECINCT#	ADDRESS		CITY
Prec. #1	Jaycee Clubhouse, 3825 Flagler Avenue.		Key West
Prec. #2	Key West High School Auditorium, 2100 Flagler Ave		Key West
Prec. #3	Key West High School Auditorium, 2100 Flagler Ave.		Key West
Prec. #4	Martin Luther King Community Pool, 300 Catherine St.		Key West
Prec. #5	Old City Hall, 510 Greene Street.		Key West
Prec. #6	St. Mary’s Convent, 724 Truman Avenue.		Key West
Prec. #7	Moose Club, 700 Eisenhower Dr.		Key West
Prec. #8	Glad Tiding Tabernacle Assembly of God1209 United St (Georgia St Entrance).		Key West
Prec. #9	Senior Citizens Plaza Auditorium(Rear Entrance), 1400 Kennedy Dr.		Key West
Prec. #10	Church of Jesus Christ of Latter Day Saints, 3424 Northside Dr.		Key West

1.5 COORDINATION

A. Contractors shall cooperate in the coordination of their separate activities in a manner that will provide the least interference with the Owner's operations and other contractors and utility companies working in the area, and in the interfacing and connection of the separate elements of the overall project work.

B. If any difficulty or dispute should arise in the accomplishment of the above, the problem shall be brought immediately to the attention of the Engineer.

1.6 WORK TO BE PERFORMED BY OTHERS

A. During the construction period for this project, the Owner (either with his own forces or under a separate contract) may be performing work that may require the cooperation of the Contractors in scheduling and coordination to avoid conflicts.

B. If any difficulty or dispute should arise in the accomplishment of the above, the problem shall be brought immediately to the attention of the Engineer.

C. All Contractors working on this site are subject to this requirement for cooperation, and all shall abide by the Engineer's decision in resolving project coordination problems without additional cost to the Owner.

1.7 SITE INVESTIGATION AND REPRESENTATION

A. The Contractor acknowledges satisfaction as to the nature and location of the work, the general and local conditions, particularly those bearing upon availability of transportation, access to the site, disposal, handling and storage of materials, availability of labor, water, electric power, roads, and uncertainties of weather, or similar physical conditions at the site, the conformation and conditions of the ground, the character of equipment and facilities needed preliminary to and during the prosecution of the work, and all other matters which can any way affect the work or the cost thereof under this Contract.

B. The Contractor further acknowledges satisfaction as to character, quality, and quantity of surface and subsurface materials to be encountered from his inspection of the site and from reviewing any available records of exploratory work furnished by the Owner or included in these Documents. Failure by the Contractor to become acquainted with the physical conditions of the site and all available information will not relieve the Contractor from responsibility for properly estimating the difficulty or cost of successfully performing the work.

C. The Contractor warrants that as a result of examination and investigation of all the aforesaid data, the contractor can perform the work in a good and workmanlike manner and to the satisfaction of the Owner.

D. The Owner assumes no responsibility for any representations made by any of its officers or agents during or prior to the execution of this Contract, unless (1) such representations are expressly stated in the Contract, and (2) the Contract expressly provides that the responsibility therefore is assumed by the Owner.

1.8 INFORMATION ON SITE CONDITIONS

A. General: Any information obtained by the Engineer regarding site conditions, subsurface information, water level, existing construction of site facilities as applicable, and similar data will be available for inspection at the office of the Engineer upon request. Such information is offered as supplementary information only. Neither the Engineer nor the Owner assumes any responsibility for the completeness or interpretation of such supplementary information.

1.9 DIFFERING SUBSURFACE CONDITIONS

A. The Engineer shall investigate such conditions promptly and following this investigation, the Contractor shall proceed with the work, unless otherwise instructed by the Engineer. If the Engineer finds that such conditions do so materially differ and cause an increase or decrease in the cost of, or in the time required for performing the work, the Engineer will recommend to the Owner the amount of adjustment in cost and time he considers reasonable. The Owner will make the final decision on all Change Orders to the Contract regarding any adjustment in cost or time for completion.

1.10 UTILITIES

A. During excavation the Contractor shall be responsible for determining, at his cost, the locations of all known utilities in the project area.

B. Contractor shall notify utility location service (e.g. Call Sunshine 1-800-432-4770) a minimum for 48 hours prior to work order mobilization. Assigned notification number shall be maintained at the job site at all times and recorded in the daily reports.

1.11 CONTRACTOR'S RESPONSIBILITY FOR UTILITY PROPERTIES AND SERVICE

A. Where the Contractor's operations could cause damage or inconvenience to telephone, television, gas, water, sewer, or irrigation systems, the operations shall be suspended until all arrangements necessary for the protection of these utilities and services have been made by the Contractor.

B. Notify all utility offices, which are affected by the construction operation at least 48 hours in advance. Under no circumstances expose any utility without first obtaining permission from the appropriate agency. Once permission has been granted, locate, expose, and provide temporary support for all existing underground utilities.

C. The Contractor shall be solely and directly responsible to the Owner and operators of such properties for any damage, injury, expense, loss, inconvenience, delay, suits, actions, or claims of any character brought because of any injuries or damage which may result from the construction operations under this Contract

D. Neither the Owner nor its Officers or agents shall be responsible to the Contractor for damages as a result of the Contractor's failure to protect utilities encountered in the work.

E. In the event of interruption to domestic water, sewer, storm drain, or other utility services as a result of accidental breakage due to construction operations, promptly notify the proper authority. Cooperate with said authority in restoration of service as promptly as possible and bear all costs of repair. In no case shall interruption of any water or utility service be allowed to exist outside working hours unless prior approval is granted.

F. In the event the Contractor encounters water service lines that interfere with trenching, he may, by obtaining prior approval of the property owner, Florida Keys Aqueduct Authority

(FKAA), or Fire Department as applicable, and the ENGINEER, cut the service dig through, and restore service with similar and equal materials at the Contractor's expense.

G. The Contractor shall replace, at his own expense, all existing utilities or structures removed or damaged during construction, unless otherwise provided for in these Contract Documents or ordered by the Engineer.

1.12 TEMPORARY WATER

A. The Contractor shall make his own arrangements to obtain suitable water for any need and shall pay all costs.

1.13 TEMPORARY ELECTRIC POWER

A. The Contractor shall make his own arrangements to obtain and pay for electrical power used until final acceptance by the Owner.

1.14 SAFETY REQUIREMENTS FOR TEMPORARY ELECTRIC POWER

A. Temporary electric power installation shall meet the construction Safety requirements of OSHA, State, and other governing agencies.

1.15 SANITARY FACILITIES

A. The Contractor shall provide and maintain sanitary facilities for his employees and his subcontractor's employees that will comply with the regulations of the local and State Departments of Health and as directed by the Owner.

1.16 STORAGE OF MATERIALS

A. Materials shall be so stored as to ensure the preservation of their quality and fitness for the work. When considered necessary, they shall be placed on wooden platforms or other clean hard surfaces and not on the ground. Stored materials shall be located so as to facilitate prompt inspection. Stored materials in the right –of –way shall be fully barricaded and must be fitted with lights at night. Private property shall not be used for storage purposes without the written permission of the owner or lessee. Materials shall not be stored where access to any structure, plot, or road is blocked. Location of stored materials approved by the ENGINEER or his designee.

B. Delicate instruments and materials subject to vandalism shall be placed under lock cover and, if necessary, provided with temperature control as recommended by the manufacturer.

1.16 CONSTRUCTION SAFETY PROGRAM

A. The Contractor shall develop and maintain for the duration of this Contract, a safety program that will effectively incorporate and implement all required safety provisions. The

Contractor shall appoint an employee who is qualified and authorized to supervise and enforce compliance with the safety program.

B. The duty of the Engineer to conduct construction review of the Contractor's performance is not intended to include a review or approval of the adequacy of the Contractor's safety supervisor, the safety program or any safety measures taken in, on, or near the construction site.

C. The Contractor shall do all work necessary to protect the general public from hazards, including, but not limited to, surface irregularities, or unramped grade changes in pedestrian sidewalk or roadway. Barricades, lights, and proper signs shall be furnished in sufficient amount to safeguard the public and the work.

D. The performance of all work and all completed construction, particularly with respect to ladders, platforms, structure openings, scaffolding, shoring, lagging, machinery guards and the like, shall be in accordance with the applicable governing safety authorities.

E. During construction, the Contractor shall construct and at all times maintain satisfactory and substantial temporary chain link fencing, solid fencing, railing, barricades or steel plates, as applicable, at all openings, obstructions, or other hazards in streets, sidewalks, floors, roofs, and walkways. All such barriers shall have adequate warning lights as necessary, or required for safety. Also all barriers shall have a lower horizontal continuous frame member at a maximum of 17” above grade.

1.17 ACCIDENT REPORTS

A. If death or serious injuries or serious damages are caused; the Contractor must promptly report by telephone or messenger to the Engineer. In addition, the Contractor must promptly report in writing to the Engineer all accidents whatsoever arising out of or in connection with, the performance of the work whether on, or adjacent, to the site, giving full details and statements of witnesses.

B. If a claim is made against the Contractor or any subcontractor on account of any accident, the Contractor shall promptly report the facts in writing to the Engineer, giving full details of the claim.

1.18 TRAFFIC MAINTENANCE AND SAFETY

A. Comply with all rules and regulations of the state, county, and city authorities regarding closing or restricting the use of public streets or highways. No public or private road shall be closed, except by express permission of the owner. Conduct the work so as to assure the least possible obstruction to traffic and normal commercial pursuits. Protect all obstructions within traveled roadways by installing approved signs, barricades, and lights where necessary for the safety of the public. The convenience of the general public and residents adjacent to the project and the protection of persons and property are of prime importance and shall be provided for in an adequate and satisfactory manner.

B. Maintenance of Traffic shall be maintained at all construction sites until the work is either completed or any open trenches have been properly covered and all equipment is properly stored. Contractor shall maintain Maintenance of Traffic (MOT) signs in good repairs and required MOT lights should be operative at all times. The Owner shall stop work if MOT is not properly maintained; there shall not be any additional cost to the Owner for this downtime.

C. When flagmen and guards are required by regulation, permits, or when deemed necessary for safety, they shall be furnished with approved orange wearing apparel and other regulation traffic-control devices. Flaggers shall be certified by State approved agency.

D. MOT plans shall be submitted with the Work Order Right-of-Way Permit application for review and approval by the Engineering Department.

1.19 STREET MAINTENANCE

A. CONTRACTOR shall notify all residents and proprietors adjacent to construction site of work to be performed, more specifically the notice shall state the day and time construction will begin, the name and phone number of the Contractor's representative responsible for the completion of the proposed improvements. Notice shall also include the Owner's representative for the project.

1.20 FIRE PREVENTION AND PROTECTION

A. The Contractor shall perform all work in a fire-safe manner and shall supply and maintain on the site adequate fire-fighting equipment capable of extinguishing incipient fires. The Contractor shall comply with applicable federal, state, and local fire-prevention regulations. Where these regulations do not apply, applicable parts of the National Fire Prevention Standard for Safeguarding Building Construction Operations (NFPA No. 241) shall be followed.

1.21 HURRICANE PREPAREDNESS PLAN

A. Within 30 days of the date of Notice to Proceed, the CONTRACTOR shall submit to the ENGINEER and City Representative a Hurricane Preparedness Plan. The plan should outline the necessary measures which the CONTRACTOR proposes to perform at no additional cost to the OWNER in case of a hurricane warning.

B. In the event of inclement weather, or whenever Owners Representative shall direct, CONTRACTOR will, and will cause Subcontractors to protect carefully the Work and materials against damage or injury from the weather. If, in the opinion of Owner's Representative, any portion of Work or materials shall have been damaged or injured by reason of failure on the part of CONTRACTOR or any Subcontractors to so protect the Work, such Work and materials shall be removed and replaced at the expense of the CONTRACTOR.

1.22 SITE RESTORATION AND CLEANUP:

A. At all times during the work keep the premises clean and orderly and upon completion of daily work repair all damage caused by equipment and leave the project free of rubbish or excess materials of any kind.

B. Stockpile excavated materials in a manner that will cause the least damage to adjacent lawns, grassed areas, gardens, shrubbery, or fences regardless of whether these are on private property, or State, County, or City rights-of-way. Remove all excavated materials from grassed and planted areas, and leave these surfaces in a condition equivalent to their original condition.

1.23 FINISHING OF SITE, BORROW, AND STORAGE AREAS

A. Upon completion of the project, all areas used by the Contractor shall be properly cleared of all temporary structures, rubbish and waste materials and properly graded to drain and blend in with the abutting property. Areas used for the deposit of waste materials shall be finished to properly drain and blend in with the surrounding terrain.

1.24 AREA CLEANUP DURING CONSTRUCTION

A. Thoroughly clean all spilled dirt, gravel, sand, concrete, or other foreign materials caused by the construction operations from all streets and roads, grass, pathways, or concrete walkways and from adjacent areas at the conclusion of each day's operation. Wet concrete is not to be stored, dumped, or placed on the ground or other structures on any City property at any time. Truck or equipment wash down is not to be performed on City Property.

1.25 PREVENTION

A. Give all unpaved areas used in the construction area an approved dust-preventive treatment or periodically water to prevent dust during construction. Applicable environmental regulations for dust prevention shall be strictly adhered to.

1.26 SUBMITTALS

A. See Submittals section of the specifications

1.27 PAYMENT

A. The cost of the work in this section is considered incidental to the contract.

PART 2 – Not used

PART 3 – Not used

END OF SECTION

SECTION 01020
SUMMARY OF WORK

PART 1 - GENERAL

1.1 DESCRIPTION

A. Work Included: Furnishing all materials, equipment and labor for the construction and/ or replacement of pavement overlay and reconstruction, shoulder restoration, sidewalks, curbs, gutters, crosswalks, site clean-up, and all necessary appurtenances and incidental work to provide a complete and serviceable project identified as:

CITY OF KEY WEST, FLORIDA
RIGHT-OF- WAY IMPROVEMENTS 2015

B. Related requirements in other parts of the Contract Documents: General Conditions of the Contract for Construction.

C. Contractor's Duties:

1. In addition to provisions stipulated in other portions of the Contract Documents, the Contractor shall:

   a. Secure permits (including City of Key West Right-of-Way Permit) as necessary for proper execution and completion of the work.

   b. Give required notices.

2. The Contractor shall be totally responsible for all permits required and shall ensure that construction complies with all applicable local, state, and federal codes.

3. Provide an experienced, qualified, and competent Superintendent to oversee the Work. Prior to starting construction, the Proposed Superintendent's qualifications shall be submitted in writing to the City for approval. The approved Superintendent shall be expected to remain for the duration of the Project, unless the Owner or Engineer deem him inadequate and requests his removal or the Contractor cannot continue his services to the project for a reason or reasons that shall be communicated to the Owner. A replacement Superintendent shall be required to follow the same approval process as required for the original.

4. It shall be the Contractor's responsibility to request approval for performance of work on Saturdays, Sundays, holiday, and weekday hours other than 7:00 am until 7:00 pm. Work shall not begin prior to 8:00 am.

5. The Contractor shall provide two (2) copies of Material Safety Data Sheets (MSDS) for chemicals, paints, coatings and materials used on-site prior to initiation of work.

1.2 CONTRACTOR'S USE OF PREMISES

A. Work shall be scheduled as to not interfere with on-going area activities.

B. Coordinate use of premises and requirements for security under direction of City.

C. Assume full responsibility for the protection and safekeeping of products under this Contract, stored on the site.

D. Obtain and pay for the use of additional storage or work areas needed for operation.

E. Contractor shall provide drinking water and sanitary facilities for construction personnel

1.3 MAINTENANCE OF EXISTING UTILITIES OPERATION

A. Provide at least three weeks' notice prior to interruption of utility services for temporary or permanent connections.

B. Keep interruption of utility services, and utility outages during disconnection, moving, and reconnection to a minimum.

1.4 PROPOSED WORK

A. Work associated with this contract is anticipated to include, but may not be limited to, locations listed in the following paragraphs.

B. Asphalt Paving Locations

Street / Segment	**Paving**	**Asphalt Quantities**
Northside Drive (14th Street to Toppino Drive)	Mill and Pave	6,440 SY
Reynolds Street (Von Phister Street to Atlantic Boulevard)	Mill and Pave	3,240 SY
Simonton Street (Southard Street to Olivia Street)	Mill and Pave	4,378 SY
White Street (Eaton Street to Truman Street)	Mill and Pave	8,539 SY
12th Street (North End to Harris Avenue)	Mill and Pave	2,664 SY
12th Street (Harris Avenue to Seidenberg Avenue)	Reconstruction	982 SY
12th Street (Seidenberg Avenue to Flagler Avenue)	Mill and Pave	2,116 SY

Whitehead Street (Amelia Street to Catherine Street)	Mill and Pave	666 SY
Whitehead Street (Catherine Street to United Street)	Reconstruction	1,321 SY
Ann Street (Front Street to Caroline Street)	Reconstruction	1,818 SY

Note: 1. Mill and Pave - Mill existing pavement 1 ½ to 2 inches and replace with new asphalt.
2. Reconstruction – Removal of existing asphalt and rework existing and /or add base material; pave with 1 ½ to 2 inches of new asphalt.

C. Sidewalk and ADA Ramp Locations

Street / Segment		Concrete	Est. Quantities
Angela St.	(Simonton to Duval / Southside) Need survey / both sides	remove & replace & ADA	215 SY
Simonton St.	(Olivia to Angela / west side) Need survey / 800' to gov't	remove & replace & ADA	458 SY
Catherine St.	(Duval to Thomas / Both sides) Need survey / encroachments	new 5' sidewalk & ADA	1,000 SY
White St.	(East side Flagler to Atlantic) **(**West side 2 ADA**)**	new 5' sidewalk & ADA	666 SY
Ann Street	(Front to Caroline St. both sides) Need survey	remove & replace & ADA	1,024 SY
20th St.	(West side from Duck to past Donald)	remove & replace & ADA	555 SY
19th St.	(East side from Flagler to Donald)	remove & replace & ADA	772 SY
Donald Ave.	(North 18th terrace to 20th, up 19th & 20th)	remove & replace & ADA	1,971 SY

* All sidewalks shall be 5' except Simonton will match existing

D. Swale /Shoulder Restoration Locations

Staples Avenue	(10th to 12th)
Seminary Street	(White to Thompson)
South Street	(White to Thompson)
Staples Avenue	(1st to 5th)
Seidenberg Avenue	(1st to 5th)
Patterson Avenue	(2nd to 5th)
Patterson Avenue	(3rd to 5th)

Swale / Shoulder Restoration to be performed according to the detail in PART 6 DETAILS

END OF SECTION

SECTION 01014
ENVIRONMENT PROTECTION

PART 1 GENERAL

1.1 GENERAL

A. The Contractor shall maintain all work areas within and outside the project boundaries free from environmental pollution, which would be in violation to any federal, state, or local regulations.

B. The work specified in this Section consists of designing, providing, maintaining and removing temporary erosion and sedimentation controls as necessary.

C. Temporary erosion controls include, but are not limited to, grassing, mulching, watering, and reseeding on-site surfaces and spoil and borrow area surfaces and providing interceptor ditches at ends of berms and at those locations which will ensure that erosion during construction will be either eliminated or maintained within acceptable limits as established by the OWNER.

D. Temporary sedimentation controls include, but are not limited to, silt dams, traps, barriers, and appurtenances at the foot of sloped surfaces which will ensure that sedimentation pollution will be either eliminated or maintained within acceptable limits as established by the OWNER.

E. CONTRACTOR is responsible for providing effective temporary erosion and sediment control measures during construction or until final controls become effective.

1.2 PROTECTION OF AIR QUALITY

A. The air pollution likely to occur due to construction operations shall be minimized by wetting down bare soils during windy periods, requiring the use of properly operating combustion emission control devices on construction vehicles and equipment used by contractors, and by encouraging the shutdown of motorized equipment not actually in use.

B. Trash burning will not be permitted on the construction site.

C. Contractor shall provide dust control for any asphalt / concrete removal and during the asphalt milling operations.

1.3 CONSTRUCTION NOISE CONTROL

A. The Contractor shall conduct all his work, use appropriate construction methods and equipment, and furnish and install acoustical barriers, all as necessary so that no noise emanating from the process or any related tool or equipment will exceed legal noise levels, as set forth in the Code of Ordinances, City of Key West, Florida.

1.4 MITIGATION OF CONSTRUCTION NOISE IMPACT

A. The Contractor shall submit to the Engineer his plans to mitigate the construction noise impacts and to comply with the noise criteria specified herein, including the method of construction, the equipment to be used, and acoustical treatments if necessary.

1.5 PAYMENT

A. Payment for the work associated with this Section will be incidental to the contract.

PART 2 – Not used

PART 3 – Not used

END OF SECTION

SECTION 01025
MEASUREMENT AND PAYMENT

PART 1 GENERAL

1.1 GENERAL

A. The CONTRACTOR shall receive and accept the compensation as provided in the BID and the Contract in full payment for performing all operations necessary to complete the work under this Contract, and also in full payment for all loss or damages arising from the nature of the work, until the final acceptance by the OWNER.

B. The Unit prices stated in the Proposal include all costs and expenses for performing and completing the work as ordered and as described in the Contract Documents, details, technical specifications, and specified herein. Measurement and payment for an item at a Unit Price or Lump Sum shown in the Proposal shall be in accordance with the description of the item in this section.

C. The CONTRACTOR'S attention is called to the fact that the quotations for various items of work are intended to establish a total price for completing the work. Should the CONTRACTOR feel that the cost for an item has not been established in the BID, or this section, they shall include the cost for that work in an applicable BID item, so that this bid reflects his total Unit Prices and Aggregate Sums for completing the work in its entirety.

D. The quantities for payment under this Contract shall be determined by actual measurement of completed items, in-place, and ready for service and accepted by the OWNER, in accordance with the applicable method of payment therefore contained herein. The CONTRACTOR shall designate and provide a representative to be present at, to witness, and to assist in the making of field measurement of payment.

1.2 MEASUREMENT–GENERAL

A. Whenever pay quantities of material are determined by weight, the material shall be weighed on scales furnished by CONTRACTOR and certified accurate by the state agency responsible. A weight or load slip shall be obtained from the weigher and delivered to the OWNER'S representative at the point of delivery of the material.

B. Vehicles used to haul material being paid for by weight shall be weighed empty daily and at such additional times as required by ENGINEER. Each vehicle shall bear a plainly legible identification mark.

C. All materials which are specified for measurement by the cubic yard "measured in the vehicle" shall be hauled in vehicles of such type and size that the actual contents may be readily and accurately determined. Unless all vehicles are of uniform capacity, each vehicle must bear a plainly legible identification mark indicating its water level capacity. All vehicles shall be loaded to at least their water level capacity. Loads hauled in vehicles not meeting the above requirements or loads of a quantity less than the capacity of the vehicle, measured after being leveled off as above provided, will be subject to rejection, and no

compensation will be allowed for such material.

D. Units of measure shown on the Proposal shall be as follows unless specified otherwise.

Item	**Method of Measurement**
CY	Cubic Yard: Field Measure by ENGINEER within the limits specified or shown
EA	Each: Field Count by ENGINEER
LF	Linear Foot: Field Measure by ENGINEER
LS	Lump Sum: Unit is one; no measurement will be made
SF	Square Foot: Measurement & calculation
SY	Square Yard: Measurement & calculation
TON	Ton: Haul tickets

1.3 PAYMENT

A. General: Progress payments on individual Work Orders will be made monthly based on the date of Work Order Notice to Proceed.

B. Payment for all Work shown or specified in the Contract Documents is included in the Contract Price. No measurement or payment will be made for individual items except as itemized herein as unit price items.

C. Payment will not be made for following:
   1. Loading, hauling, and disposing of rejected material.
   2. Quantities of material wasted or disposed of in manner not called for under Contract Documents.
   3. Rejected loads of material, including material rejected after it has been placed by reason of failure of CONTRACTOR to conform to provisions of Contract Documents.
   4. Material not unloaded from transporting vehicle.
   5. Defective Work not accepted by OWNER.
   6. Material remaining on hand after completion of Work.

D. Partial Payment: No partial payments will be made for materials and equipment delivered or stored.

E. Disregard references to method of payment in the referenced Standard Specifications.

1.3 DESCRIPTION OF PROPOSAL ITEMS

A. Bonds (Item 1) shall be paid as a lump sum based on the "Sum of Extended Totals" in the Bid Proposal. Subject to ENGINEER's approval, total bond amount may be reduced as Work Orders are completed.

B. Mobilization/Demobilization (Item 2) shall be paid at the unit price per each Work Order issued.

C. Asphalt Concrete Courses (Items 3 and 4)

1. Payment for the asphalt concrete pavement overlay will be made at the unit price per ton of concrete asphalt stated in the CONTRACTOR's Proposal, and shall constitute full compensation for milling pavement connections, furnishing and applying the tack coat, furnishing, laying, and compacting the leveling course and asphalt concrete. Measurement for payment will be based on the number of tons (2,000 pounds) of asphalt concrete incorporated in the pavement, as weighed on tested scales. Present trip ticket to the ENGINEER for signature as the material is delivered. Each trip ticket will show the date and time of delivery, truck number or driver's name, net weight of the material, and shall be considered as valid delivery receipts only when signed by the ENGINEER. Payment will be made only for the items of work shown in the Schedule of Unit Prices and individual Work Order. All other labor, materials, equipment, testing and incidentals necessary to complete the work shall be considered incidental to the unit prices shown in the Proposal.

D. Asphalt Milling (Item 5) ordered by the ENGINEER will be paid at the unit price per square feet of asphalt concrete pavement milled as stated in the CONTRACTOR's Proposal, and shall constitute full compensation for all asphalt concrete pavement milled beyond that considered to be incidental and required for connections to existing pavement. Milling in areas damaged due to the CONTRACTOR's failure to protect surface will not be paid for.

E. Asphalt Removal (Item 6) of existing bituminous surface will be made at the unit price per square yard of bituminous surface removed as stated in the CONTRACTOR's Proposal, and shall constitute full compensation for the work of removal and disposal of existing bituminous surfaces that is not paid for under Trench Restoration.

F. Rework Existing Base (Item 7) shall be paid at the unit price per square yard of base course material reworked as stated in the CONTRACTOR's Proposal and shall constitute full compensation for all earthwork required for this work.

G. 12-inch Thick Limerick Stabilized Base (Item 8) shall be paid at the unit price per ton of limerock as stated in the CONTRACTOR's Proposal and shall constitute full compensation for furnishing and delivering the limerock. Measurement for payment will be based on the number of tons (2,000 pounds) of limerock used, as weighed on tested scales. Present trip tickets to the ENGINEER for his signature as the material is delivered. Each trip ticket will show the date and time of delivery, truck number or driver's name, net

weight of the material and shall be considered as valid delivery receipts only when signed by the ENGINEER. Payment will be made only for the items of work shown in the schedule of unit prices and individual Work Order. All other labor, materials, equipment, compaction, testing and incidentals necessary to complete the work shall be considered incidental to the unit price as stated in the CONTRACTOR's proposal.

H. Pavement Striping (Items 9-12) shall be paid by the linear foot of striping as stated in the CONTRACTOR's Proposal and shall constitute full compensation for furnishing and installing striping.

I. Pavement Markings (Items 13-16) shall be paid per each handicap space, stop bar, pavement message and directional marking stated in the CONTRACTOR's Proposal and shall constitute full compensation for furnishing and installing said marking.

J. Reflective Pavement Markers (Item 17) shall be paid per each marker the unit price stated in the CONTRACTOR's Proposal and shall constitute full compensation for furnishing and installing said marker.

K. Reflective Curb Paint (Item 18) shall be paid by the linear foot of paint as stated in the CONTRACTOR's Proposal and shall constitute full compensation for furnishing and painting.

L. Utility Appurtenance Extensions (Items 19-21) including extensions of valve boxes, manholes, catch basins, inlets or other appurtenances will include full compensation for all work and materials required to raise or extend each appurtenance. Payment for utility appurtenance extensions will be based on the unit price for each extension stated in the CONTRACTOR's Proposal.

M. Replace Existing Storm Water Inlet Grate with ADA Compliant Inlet Grate and Frame (Item 22) shall be paid by each grate replaced at the unit price as stated in the CONTRACTOR's Proposal and shall constitute full compensation for furnishing and installation.

N. Single Post Sign (Item 23) shall be paid for each sign at the unit price as stated in the CONTRACTOR's Proposal and shall constitute full compensation for furnishing and installation.

O. Single Post Sign Reusing Existing Sign (Item 24) shall be paid for each sign post at the unit price as stated in the CONTRACTOR's Proposal and shall constitute full compensation for removal, furnishing and installation of the new pole and existing sign.

P. Sidewalks (Items 25 and 26) shall be paid by the square yard of concrete surface at unit prices stated in the Contractor's BID. Payment shall be considered full compensation for furnishing all labor, materials, and equipment to complete the work as specified under this section. Payment for replacing sidewalks damaged by contractor will be incidental to the contract.

Q. Curbs (Items 27-29) shall be paid by the linear foot of curb and thickened edge constructed at unit prices stated in the Contractor's BID. Payment shall be considered full compensation for furnishing all labor, materials, and equipment to complete the work. Payment for replacing curbs damaged by contractor will be incidental to the contract.

R. Shoulder / Swale Restoration (Item 30) shall be paid at the unit price per square yard of restoration as stated in the CONTRACTOR's Proposal and shall constitute full compensation for all labor, materials and equipment required for this work.

S. Seepage Trench (Item 31) shall be paid at the unit price per linear feet of trench construction as stated in the CONTRACTOR's Proposal and shall constitute full compensation for all labor, materials and equipment required for this work.

T. Failed Trench Restoration (Item 32) shall be paid at the unit price per linear feet of trench restoration as stated in the CONTRACTOR's Proposal and shall constitute full compensation for all labor, materials, equipment, compaction, testing and incidentals required for this work.

U. Sod (Item 33) shall be paid at the unit price per square yard of sod as stated in the CONTRACTOR's Proposal and shall constitute full compensation for all labor, materials and equipment required for this work.

PART 2 – Not used

PART 3 – Not used

END OF SECTION

.

SECTION 01050
FIELD ENGINEERING

PART 1 - GENERAL

1.1 DESCRIPTION:

A. Work Included:

1. Provide field-engineering services required for the Project, including but not limited to survey work required in execution of the Work.

B. Related Work:

1. General and Supplementary Conditions of the Contract.
2. Section 01020 Summary of Work.

1.2 QUALITY ASSURANCE:

A. Qualifications of Surveyor or Engineer: Professional Engineer and/or Surveyor currently licensed in the State of Florida.

1.3 SUBMITTALS:

A. Submit name and address of proposed Surveyor and/or Contractor's Engineer to the City.

B. Upon request of the City's Engineer, submit documentation to verify accuracy of field engineering work.

C. Submit certificates signed by the Surveyor or Engineer certifying that elevations and locations of the work of this Project are in conformance, or non-conformance, with the Contract Documents.

PART 2 – MATERIALS (not used)

PART 3 - EXECUTION

3.1 EXAMINATION AND PREPARATION OF SITE

A. Before starting operations, Contractor shall examine site of work to acquaint himself with conditions to be encountered.

B. Compare actual site with drawings and specifications.

C. Report discrepancies affecting work or cost thereof to the City.

D. Verify exact locations of sewers, water mains, gas mains, above or below ground electrical wires and conduits and structures which may interfere with work.

E. No extra compensation will be allowed for any extra work made necessary due to conditions or obstacles encountered during progress of work, which could have been determined by examination of site or by contacting Owners of utilities, pipelines and conduits before starting operations.

F. Comply with State law concerning Sunshine State One Call of Florida, State Statute Title 33, Chapter 556.

3.2 LINES AND GRADES

A. Prior to staking out work, Contractor shall verify established base line, benchmarks, and control points provided.

B. Contractor shall furnish and maintain lines and grades.

C. Contractor shall take immediate steps to correct errors or inconsistencies in lines and grades of work to be in conformity with Contract Documents.

D. Contractor shall be fully responsible for accuracy of lines and grades of work and control and checking and immediate correction of it.

3.3 RESTORATION

A. Items to remain which are disturbed, damaged, or removed when performing required work or for convenience of Contractor or to expedite his operations shall be restored, repaired, reinstalled, or replaced with new work and refinished, as appropriate, so as to be left in as good condition as existed before work commenced and such restoration shall be considered incidental to the work.

B. Any sidewalks or pavement replaced or installed shall meet ADA requirements.

C. Existing items to be altered, extended, salvaged, or relocated and reused, if found to be defective in any way, shall be reported to the City before items are disturbed.

D. Materials and workmanship used in restoring work shall conform in type and quality to original existing construction.

3.4 PAYMENT

A. Payment for work specified in this section will be incidental to the contract.

END OF SECTION

SECTION 01300
SUBMITTALS

PART 1 - GENERAL

1.1 GENERAL

A. Inquiries: Direct to ENGINEER regarding procedure, purpose, or extent of Submittal.

B. Submittal Submission Procedures: As provided in General Conditions, as specified herein, and as may otherwise be established during the preconstruction conference.

C. OWNER's Authorization: At any time, OWNER may authorize changes to procedures and requirements for Submittals, as necessary to accomplish specific purpose of each Submittal. Such authorization will be by Field Order or Work Change Directive.

D. Timeliness: Make submissions in accordance with requirements of individual Specification sections, as shown on the current accepted schedule of Submittals submissions, and in such sequence as to cause no delay in Work or in work of other contractors.

E. Identification of Submittals:

1. Complete, sign, and transmit with each Submittal package, one Transmittal of CONTRACTOR's Submittal Form attached at the end of this section.
2. Identify each Submittal with numbering and tracking system reviewed by ENGINEER:
   a. Sequentially number each Submittal.
   b. Resubmission of a Submittal will have original number with sequential alphabetic suffix.
3. Show date of submission and dates of previous submissions.
4. Show Project title and OWNER's contract identification and contract number.
5. Show names of CONTRACTOR, Subcontractor or Supplier, and manufacturer as appropriate.
6. Identify, as applicable, Contract Document section and paragraph to which Submittal applies.
7. Clearly identify revisions from previous submissions.

F. Incomplete Submittal Submissions:

1. At ENGINEER's sole discretion, ENGINEER will either (i) return the entire Submittal for CONTRACTOR's revision/correction and resubmission, or (ii) retain portions of the Submittal and request submission/resubmission of specified items or as noted thereon.

2. Submittals which do not clearly bear CONTRACTOR's specific written indication of CONTRACTOR review and approval of Submittal or which

are transmitted with an unsigned or uncertified submission form or as may otherwise be required under Contract Documents, will be returned to CONTRACTOR unreviewed for resubmission in accordance with Contract Documents.

3. Delays, re-sequencing or other impact to Work resulting from CONTRACTOR's submission of unchecked or unreviewed, Incomplete, inaccurate or erroneous, or nonconforming Submittals, which will require CONTRACTOR's resubmission of a Submittal for ENGINEER's review, shall not constitute a basis of claim for adjustment in Contract Price or Contract Times.

G. Non-specified Submissions: Submissions not required under these Contract Documents and not shown on schedule of Submittals submissions will not be reviewed and will be returned to CONTRACTOR.

H. Transmit submittals in accordance with current accepted schedule of Submittal submissions, and deliver the Engineer designated by the Engineering Department of the City of Key West.

I. Disposition of Submittals: As specified herein for administrative Submittals. ENGINEER will review, stamp, and indicate requirements for resubmission or acceptance on Submittal as follows:

1. No Exceptions Taken.

2. Reviewed as Noted:
   a. Reference the General Conditions for intent.
   b. CONTRACTOR may proceed to perform Submittal related Work.
   d. One copy for ENGINEER’s file.
   e. One copy returned to CONTRACTOR.

3. Revise and Resubmit (Revise/Correct or Develop Replacement and Resubmit):
   a. Revise/correct in accordance with ENGINEER's comments and resubmit.
   b. One copy to ENGINEER's file.
   c. One copy returned to CONTRACTOR appropriately annotated.

J. Payment for the work in this section will be incidental

PART 2 - Not used

PART 3 - Not used

END OF SECTION

SECTION 01390
PRECONSTRUCTION AUDIO-VIDEO RECORDINGS

PART 1 – GENERAL

1.1 REQUIREMENTS

A. For each Work Order, the Contractor shall provide a color audio-video recording showing the entire preconstruction site. All videos shall be taken by a professional commercial video photographer. The video photographer shall be an established enterprise that routinely provides these services. The videos shall be in DVD format or .wav files on removable USB drive, indicating the date, project name, and a brief description of the location where the video was taken. The Contractor shall submit one (1) copy of the preconstruction audio-video to the OWNER.

B. No construction shall begin prior to the review and approval of the preconstruction audio-video tape by the OWNER.

C. The total audio-video recording system and the procedures employed in its use shall be such as to produce a finished product that will fulfill the technical requirements of the project. The video portion of the recording shall produce bright sharp, and clear pictures with accurate colors and shall be free from distortion, and any other form of picture imperfection. All video recordings shall, by electronic means, display on the screen the time of day, the month, day, and year of the recording.

PART 2 – PRODUCTS (Not used)

PART 3 – EXECUTION

3.1 GENERAL

A. The following shall be included with the audio-video documentation:

1. Coverage is required within and adjacent to the right of way, easements, storage, and staging areas where the work is to be constructed.

2. Documentation of the conditions of the adjacent properties or any affected structures as a result of the impending construction.

3. Videos shall be properly identified by project name. Video shall include direction of coverage, the name of the streets or easements, engineering station numbers, date and time of coverage.

4. Provide a written video log to aid in locating any section of the construction site that may be in question.

B. There will be no separate payment for this preconstruction audio-video recording. The cost will be incidental to the contract.

END OF SECTION

SECTION 01500
TESTING SERVICES

PART 1 - GENERAL

1.1 WORK INCLUDED

A. The Contractor shall employ and pay for the services of a qualified commercial independent testing laboratory acceptable to the Owner to perform specified services.

B. Inspection, sampling, and testing is required for:

1. Backfill
2. Paving and surfacing
3. Concrete
3. Additional quality checks as required by the Engineer

C. Employment of a testing laboratory shall in no way relieve the Contractor of his obligation to perform work in accordance with the Contract.

PART 2 - PRODUCTS

2.1 SUBMITTALS

A. For each Work Order, submit two copies of reports of inspections and tests to Engineer promptly upon completion of inspections and tests, including: Provide one copy in PDF.

1. Date issued.
2. Project title and Engineer's job number.
3. Testing laboratory name and address.
4. Name and signature of inspector.
5. Date of inspection or sampling.
6. Record of temperature and weather.
7. Date of test.
8. Location of inspection or test.
9. Identification of product and specification section.
10. Type of inspection or test.
11. Observation regarding compliance with the Contract Documents.

PART 3 - EXECUTION

3.1 LABORATORY DUTIES - LIMITATIONS OF AUTHORITY

A. Cooperate with the Owner and Contractor; provide qualified personnel promptly on notice.

B. Perform specified inspections, sampling, and testing of materials and methods of construction:

1. Comply with specified standards; ASTM, other recognized standards, authorized and as specified.
2. Ascertain compliance with requirements of Contract Documents.

C. Notify the Engineer and Contractor immediately of irregularities or deficiencies of work that are observed during performance of services.

D. Perform additional services as required by the Engineer.

3.2 ON SITE TESTING

A. On site testing must be performed by technical staff certified/accredited by state approved agencies and industry standards.

B. Testing as required by other sections of this document.

3.3 PAYMENT

A. Payment for the work in this section will be incidental to the respective unit price items.

END OF SECTION

SECTION 01530
BARRIERS

PART 1 – GENERAL

1.1 REQUIREMENTS

A. Furnish, install, and maintain suitable barriers as required to prevent public entry, and to protect the work, existing facilities, trees, and plants from construction operations; remove when no longer needed, or at completion of work.

1.2 RELATED REQUIREMENTS

A. Section 01020 Summary of Work.

PART 2 - PRODUCTS

2.1 MATERIALS – GENERAL

A. Materials may be new or used, suitable for the intended purpose, but must not violate requirements of applicable codes and standards.

2.02 FENCING

A. Minimum fence height shall be four feet. Open-mesh orange plastic fence shall be used to prohibit entry to the construction zone.

2.03 BARRIERS

A. Materials are Contractor's option, as appropriate to serve required purpose.

PART 3 - EXECUTION

3.01 GENERAL

A. Install facilities of a neat and reasonably uniform appearance, structurally adequate for the required purposes.

B. Maintain barriers during entire construction period.

C. Relocate barriers as required by the progress of construction.

3.02 FENCES

A. Provide and maintain fences necessary to assure security of the site during construction to keep unauthorized people and animals from the site when construction is not in progress.

B. Provide additional security measures as deemed necessary and approved by the OWNER.

3.03 TREE AND PLANT PROTECTION

A. Preserve and protect existing trees and plants at site which are designated to remain, and those adjacent to site.

B. Consult with the ENGINEER and the City's Urban Forestry Manager and remove agreed-on roots and branches which interfere with construction. Employ a qualified tree surgeon to remove branches and treat cuts. No trees or roots shall be removed without approval and/or a permit issued by the City Tree Commission.

C. Protect root zones of trees and plants:

1. Do not allow vehicular traffic or parking.
2. Do not store materials or products.
3. Prevent dumping of refuse or chemically injurious materials or liquids.
4. Prevent puddling or continuous running water.

D. Carefully supervise excavating, grading and filling, and other construction operations, to prevent damage.

E. Replace, or suitably trim trees and plants designated to remain which are damaged or destroyed due to construction operations.

3.04 REMOVAL

A. Completely remove barricades when construction has progressed to the point that they are no longer needed and when approved by the OWNER.

B. Repair damage caused by construction. Fill and grade areas of the site to the required evaluations, and clean up the area.

END OF SECTION

SECTION 01700
CONTRACT CLOSEOUT

PART 1 – GENERAL

1.1 REQUIREMENTS

A. Work Order completion includes substantial completion, final inspection after completion, final cleaning, contractor's closeout submittals, and final adjustment of accounts.

1.2 SUBSTANTIAL COMPLETION

A. When Contractor considers work has reached substantial completion for an individual Work Order, they shall submit to the OWNER the following:

1. Written notice that the work is substantially complete in accordance with Contract Documents.

2. A list of items yet to be completed or corrected and explanations thereof.

B. Within a reasonable time upon receipt of such notice, the OWNER will make an inspection, if necessary, to determine the status of completion.

C. Should the OWNER determine that the Work Order is not substantially complete:

1. The OWNER will promptly notify the Contractor in writing, giving the reasons thereof.

2. Contractor shall remedy the deficiencies in the work and send a second written notice of Substantial Completion to the OWNER.

3. Upon receipt of the second notice, the OWNER will review the work.

D. When the OWNER finds that the Work Order is substantially complete, they will issue a Certificate of Substantial Completion with a tentative list of items to be completed or corrected before final inspection.

1.3 FINAL INSPECTION AFTER COMPLETION

A. When Contractor considers the Work Order complete with all minor deficiencies completed or corrected, he shall submit written certification that:

1. Contract Document requirements have been met.

2. Work has been inspected for compliance with Contract Documents.

3. Work has been completed in accordance with Contract Documents.

4. All minor deficiencies have been corrected or completed and the Work is ready for final inspection.

5. Project record documents are complete and submitted.

B. Within a reasonable time upon receipt of such certification, the OWNER will make an inspection to verify the status of completion.

C. Should the OWNER determine that the work is incomplete or defective:

1. The OWNER will promptly notify the Contractor in writing, listing the incomplete or defective work.

2. Contractor shall remedy the deficiencies in the work and send a second written certification to the OWNER that the work is complete.

3. Upon receipt of the second certification, the OWNER will review the Work.

D. When the OWNER determines that the work is acceptable under the Contract Documents, the Contractor shall provide all closeout submittals.

1.4 FINAL CLEANING

A. Execute final cleaning prior to final inspection.

B. Clean site; sweep paved areas, rake clean other surfaces.

C. Remove waste and surplus materials, rubbish, and construction facilities from the Project and from the site.

1.5 CONTRACTOR'S CLOSEOUT SUBMITTALS

A. Project Record Documents

1. At Contract Closeout, submit documents with transmittal letter containing date, project title, Contractor’s name and address, list of documents, and signature of Contractor.

2. Changes made by Field Order or by Change Order.

B. Evidence of payment and Release of Liens.

1.6 FINAL ADJUSTMENT OF ACCOUNTS

A. Submit a final statement of accounting to the OWNER.

B. Statement shall reflect all adjustments to the Contract Sum.
   1. The original Contract sum.
   2. Additions and deductions resulting from:
      a. Previous change orders or written amendment.
      b. Allowances
      c. Unit prices
      d. Deductions for uncorrected work.
      e. Deductions for liquidated damages
      f. Other adjustments
   3. Total contract sum as adjusted
   4. Previous payments
   5. Sum remaining due

1.7 FINAL AS-BUILT OR RECORD DRAWINGS

A. All supplied data collections, as-builts, drawings and files to be compatible with esri ArcGIS 10.2.2 Software. The OWNER's current computing environment consists of *Microsoft SQL Server - Windows 7/Server 2008 - ESRI GIS Platform*.

B. Interfaces and Integrations:

   1. The City of Key West uses a number of software applications critical to its core operation and mission. The proposed mobile asset data collection solution will need to interface or integrate with these existing platforms. - Arc Collector-ArcGIS Online - ArcMap 10.2

C. Contact Nicholas Osterhoudt, City GIS Manager, at 305-809-3721 with software related questions.

PART 2 - PRODUCTS (not used)

PART 3 - EXECUTION (not used)

END OF SECTION

DIVISION 2

SITE WORK

SECTION 02221
FAILED TRENCH RESTORATION
EXCAVATION & BACKFILL

PART 1 GENERAL

1.1 WORK INCLUDED

A. This Section covers the work necessary for the failed trench excavation and backfill, complete.

B. Refer to *Repairs for Asphalt Trench* detail in Part 6 of these Contract Documents.

1.2 TRENCH EXCAVATION

A. Excavation is unclassified. Complete all excavation regardless of the type of materials encountered. The CONTRACTOR shall make own estimate of the kind of extent of the various materials, which will be encountered in the excavation. It is the contractors responsibly to comply with the laws and regulations pertaining to the Florida Trench Safety Act. Any cost for any engineering, material, labor, and administrative cost shall be included in the proposal cost for that line item.

1.3 RELATIVE COMPACTION

A. "Relative compaction" is defined as the ratio, in percent, of the as-compacted field dry density to the laboratory maximum dry density as determined by ASTM D1557. Corrections for oversize material may be applied to either the as-compacted field dry density or the maximum dry density, as determined by the ENGINEER.

1.4 OPTIMUM MOISTURE CONTENT

A. "Optimum moisture content" shall be determined by the ASTM Standard specified to determine the maximum dry density for relative compaction. Field moisture content shall be determined on the basis of the fraction passing the 3/4-inch sieve.

1.5 SUBMITTALS

A. Submittals shall be made in accordance with the requirements specified in Section GENERAL REQUIREMENTS.

PART 2 - PRODUCTS

2.1 TRENCH BACKFILL

A. Refer to *Repairs for Asphalt Trench* detail in Part 6 of these Contract Documents for products used in trench backfill.

2.2 WATER FOR TRENCH BACKFILL

A. The CONTRACTOR shall make all arrangements for a source of water and bear all costs for the delivery of the water to the trench side.

2.3 COMPACTION EQUIPMENT

A. Compaction equipment shall be of suitable type and adequate to obtain the amount of compaction specified. Compaction equipment shall be operated in strict accordance with the manufacturer's instructions and recommendations and shall be maintained in such condition that it will deliver the manufacturer's rated compactive effort.

2.4 GRASSING

A. All grassed areas that have been damaged by trench excavation shall be sodded with Floratam St. Augustine Sod.

PART 3 EXECUTION

3.1 PREPARATION OF RIGHT-OF-WAY

A. The CONTRACTOR shall perform all clearing necessary for the proper installation of all utility lines, structures, and appurtenances in the locations specified in the Work Order. All utility poles or structures subject to damage resulting from excavation shall be protected during construction and restored to original condition upon completion of the work.

3.2 DISPOSAL OF CLEARED MATERIAL

A. The CONTRACTOR shall bear all costs of disposing of trees, stumps, brush, roots, limbs, and other waste materials from the clearing operation. Material shall be disposed of in such a manner as to meet all requirements of state, county, and local regulations regarding health, safety, and public welfare.

B. In no case shall any material be left on the project, shoved onto abutting private properties, or be buried in embankments or trenches on the project.

3.3 OBSTRUCTIONS

A. This item refers to obstructions which may be removed and do not require replacement. Remove obstructions within the trench area or adjacent thereto such as tree roots, stumps, abandoned piling, buildings and concrete structures, logs, and debris of all types without additional compensation. The ENGINEER may, if requested, make changes in the trench alignment to avoid major obstructions, if such alignment changes can be made within the easement or right-of-way without adversely affecting the intended function of the facility. The CONTRACTOR shall pay all additional costs or

credit the OWNER for any savings resulting from such alignment changes.

B. Dispose of obstructions removed from the excavation in accordance with Paragraph DISPOSAL OF CLEARED MATERIAL.

3.4 PAVEMENT, CURB, AND SIDEWALK REMOVAL

A. Cut all bituminous and concrete pavements, regardless of the thickness, and all curbs and sidewalks, prior to excavation of the trenches with an approved pavement saw, hydro-hammer, or approved pavement cutter. Width of the pavement cut shall be at least equal to the required width of the trench at ground surface. Pavement and concrete materials removed shall be hauled from the site and not used for trench backfill.

3.5 BRICK REMOVAL

A. Carefully remove all bricks encountered during excavation. The CONTRACTOR shall salvage all bricks and deliver them to the City at a specified site. The CONTRACTOR shall make arrangements with the City a minimum of 48 hours in advance of delivery of the bricks. This work shall be considered incidental.

3.6 TRENCH WIDTH

A. Refer to Repairs for Asphalt Trench detail in Part 6 of these Contract Documents.

B. Confine trench widths to dedicated rights-of-way or construction easements, unless special written agreements have been made with the affected property owner.

3.7 GRADE

A. Excavate the trench to the depth established by the ENGINEER.

B. It shall be the CONTRACTOR'S responsibility to make exploratory excavations as required to verify location, size, and elevation of existing utilities. The CONTRACTOR shall call “48 hours before digging” the underground utilities location center at 1-800-432-4770.

3.8 SHORING, SHEETING, AND BRACING OF TRENCHES

A. Sheet and brace the trench when necessary to prevent caving during excavation in unstable materials, or to protect adjacent structures, property, workers, and the public. Increase trench widths accordingly by the thickness of the sheeting. Maintain sheeting in place until the pipe has been placed and backfilled at the pipe zone. Shoring and sheeting shall be removed, as the backfilling is done, in a manner that will not damage the pipe or permit voids in the backfill. All sheeting, shoring, and bracing of trenches shall conform to the safety requirements of the federal, state, or local public agency having jurisdiction. The most stringent of these requirements shall apply.

3.9 LOCATION OF EXCAVATED MATERIALS

A. During trench excavation, place the excavated material only within the construction easement, right-of-way, or approved working area. Do not obstruct any private or public-traveled roadways or streets. Conform to all federal, state, and local codes governing the safe loading of all trenches with excavated material.

3.10 STABILIZATION

A. When, in the opinion of the ENGINEER, the existing material in the bottom of the trench is unsuitable for supporting the pipe, excavate below the flow line of the pipe, as directed by the ENGINEER. Backfill the trench to sub-grade of pipe base with stabilization material approved by the ENGINEER.

3.11 TRENCH BACKFILL ABOVE PIPE ZONE

A. Refer to Repairs for Asphalt Trench detail in Part 6 of these Contract Documents.
B. Place rock backfill material in horizontal lifts not exceeding 12 inches in un-compacted thickness. Compact to not less than 95 percent relative compaction. If compaction requirements are not met, the thickness of the un-compacted horizontal lifts shall be reduced as directed by the ENGINEER. Repair any subsequent damage caused by settlement of trenches at the CONTRACTOR'S sole expense. Under no circumstances allow sharp, heavy pieces of material to drop directly onto the pipe or the tamped material around the pipe. Do not use backfill material of consolidated masses larger than 1/2 cubic foot.

C. Where backfill is placed in water, use # 57 crushed stone backfill at no additional cost to the Owner.

D. The # 57 rock must be vibrated to achieve consolidation to a point where rock does not settle.

3.12 MAINTENANCE OF TRENCH BACKFILL

A. Maintain the backfilled trench surface until surface restoration has been completed.

B. This maintenance shall include, but not be limited to, the addition of crushed rock backfill material to keep the surface of backfilled trenches reasonably smooth, free from ruts and potholes, and suitable for normal traffic flow.

C. No additional payment will be made for the maintenance of the trench backfill prior to completion of the work outlined above.

D. No pavement replacement shall be undertaken until all items outlined above have been completed and approved by the ENGINEER.

3.13 DISPOSAL OF EXCESS EXCAVATED MATERIAL

A. Dispose of all excess excavated materials. Make arrangements for the disposal and bear all costs or retain any profit incidental to such disposal.

3.14 BLASTING

A. No blasting of any kind will be permitted.

3.15 SETTLEMENT

A. Any settlement noted within 5 feet from fill and within the 2-year warranty period in accordance with the General Conditions will be considered to be caused by improper compaction methods and shall be corrected at no cost to the OWNER. Structures damaged by settlement shall be restored to their original condition by the CONTRACTOR at no cost to the OWNER.

3.16 MOISTURE CONTROL

A. During all compacting operations, maintain optimum practicable moisture content required for compaction purposes in each lift of fill. Maintain moisture content uniform throughout the lift. At the time of compaction, the water content of the material shall be at optimum moisture content, plus or minus 2 percentage points.

B. Insofar as practicable, add water to the material at the site of excavation. Supplement, if required, by sprinkling the fill.

C. Do not attempt to compact fill material that contains excessive moisture. Aerate material by blading, disking, harrowing, or other methods, to hasten the drying process.

3.17 TESTING

A. Field Density and Moisture Tests: The Independent Testing Laboratory will determine in-place density and moisture content by any one or combination of the following methods:

1. ASTM D2922, D1556, D2216, or other methods selected by the ENGINEER. Cooperate with this testing work by leveling small test areas as designated.

Test areas shall be backfilled at CONTRACTOR'S sole expense. One (1) field density moisture test per trench, with additional every 50 feet if found that any part of the intersection does not does not meet compaction requirements. Additionally, a Vibratory Test shall be performed every 50 feet in rock back fill, should any settlement occur testing will be performed every 10 feet. Any section found not meeting the requirements shall be removed for 10 feet on either side of the failed tests and be reinstalled in 6 inch lifts. However, any lift of fill may be

tested at any time, location, or elevation. See Section TESTING SERVICES.

PART 2 - PRODUCTS (not used)

PART 3 - EXECUTION (not used)

END OF SECTION

SECTION 02555
ASPHALT PAVEMENT OVERLAY

PART 1 – GENERAL

1.1 WORK INCLUDED: This section covers the work necessary for the construction of asphalt pavement overlay and incidental work, complete.

1.2 GENERAL: See CONDITIONS OF THE CONTRACT and GENERAL REQUIREMENTS, which contain information and requirements that apply to the work specified herein and are mandatory for this project.

1.3 STANDARD SPECIFICATIONS: Where the term "Standard Specifications" is used, such reference shall mean the current edition of Florida Department of Transportation Standard Specification for Road and Bridge Construction. Where reference is made to a specific part of the Standard Specifications, such applicable part shall be considered as part of this section of the Specifications. In case of a conflict in the requirements of the Standard Specification and the requirements stated herein, the requirements stated herein shall prevail.

1.4 SUBMITTALS: As Noted

A. Certificates:

1. Prior to the delivery of asphalt materials, and paving mixes to the site, that CONTRACTOR shall submit certificates and test results of compliance of such materials with these specifications.

2. Where laboratory testing is certified herein, the CONTRACTOR shall employ an independent testing laboratory to conduct such tests and submit certificates of the test results to ensure Specification conformance.

3. The costs for submittals shall be included in the price(s) quoted for the work under this section.

1.5 Listed Reference(s) from FDOT Standard Specifications:

1. 105 QC GENERAL SS1050000
2. 230 LIMEROCK STABILIZED BASE
3. 234 SUPERPAVE ASPHLAT BASE SS2340000
4. 300 PRIME AND TACK COATS FOR BASE COURSES
5. 300 TACK COAT
6. 327 MILLING OF EXISTING ASPHALT
7. SUPERPAVE ASPHALT CONCRETE SS3340000
8. 700 HIGHWAY SIGNING
9. 710 PAINTED PAVEMENT MARKINGS
10. THERMOPLASTIC TRAFFIC STRIPES AND MARKINGS
11. 911 LIMEROCK MATERIAL FOR BASE AND STABILIZED BASE
12. 914 MATERIALS FOR SUBGRADE STABIZATION SS9140000
10. 971 TRAFFIC MARKING MATERIALS

PART 2 - MATERIALS

2.1 GENERAL

A. All materials for an existing base course and asphalt surfacing shall conform to the Standard Specification as modified herein.

B. The CONTRACTOR will be responsible for furnishing satisfactory materials that meet the Specifications and shall make such tests during the course of the work as are necessary to assure that the quality of the materials used meets the Specifications.

2.2 RELATIVE COMPACTION

A. "Relative Compaction" is defined as the ratio, in percent, of the as-compacted field dry density to the laboratory maximum dry density as determined by ASTM D1557. Corrections for oversize material may be applied to either the as-compacted field dry density or the maximum dry density, as determined by the ENGINEER.

2.3 OPTIMUM MOISTURE CONTENT

A. “Optimum Moisture Content" shall be determined by the ASTM standard specified to determine the maximum dry density for relative compaction. Field moisture content shall be determined on the basis of the fraction passing the 3/4-inch sieve.

2.4 LIME ROCK BASE COURSE

A. Aggregate quality and gradation shall confirm to Section 911 of the FDOT Standard Specification for Road and Bridge Construction.

2.5 IMPORTED BASE COURSE ACCEPTANCE

A. Imported base course materials specified in this section are subject to the following requirements:

B. All tests necessary for the CONTRACTOR to locate an acceptable source of imported material shall be made by the CONTRACTOR. Certification that the material conforms to the Specification requirements along with copies of the test results from a qualified commercial testing laboratory shall be submitted to the ENGINEER for acceptance at least 10 days before the material is required for use. All material samples shall be furnished by the CONTRACTOR at the CONTRACTOR's sole expense. Samples shall be representative and be clearly marked to show the source of the material and the intended use on the project. Sampling of the material source shall be done by the CONTRACTOR in accordance with ASTM D75. Notify the ENGINEER at least 24 hours prior to sampling. The ENGINEER may, at the ENGINEER's option, observe the sampling procedures. Tentative acceptance of the material source shall be based on an inspection of the source by the ENGINEER and/or the certified test results submitted by the CONTRACTOR to the ENGINEER, at the ENGINEER's discretion. No imported material shall

be delivered to the site until the proposed source has been tentatively accepted in writing by the ENGINEER. Final acceptance will be based on tests made on samples of material taken from the completed and compacted course. The completed course is defined as a course or layer that is ready for the next layer or the next phase of construction.

C. Gradation tests by the CONTRACTOR shall be made on samples taken at the place of production prior to shipment. Samples of the finished product for gradation testing shall be taken from each 1,500 tons of prepared materials or more often as determined by the ENGINEER, if variation in gradation is occurring, or if the material appears to depart from the Specifications. Test results shall be forwarded to the ENGINEER within 48 hours after sampling.

D. If tests conducted by the CONTRACTOR or the ENGINEER indicate that the material does not meet Specification requirements, material placement will be terminated until corrective measures are taken. Material which does not conform to the Specification requirements and is placed in the work shall be removed and replaced at the CONTRACTOR's sole expense. Sampling and testing performed by the CONTRACTOR shall be done at the CONTRACTOR's sole expense.

2.6 BITUMINOUS PRIME AND TACK COAT

A. Prime Coat: Material shall be cutback asphalt, Grade RC-70 or RC-250 meeting DOT Specification 916-2, or other material acceptable to the ENGINEER and meeting DOT Specifications.

B. Tack Coat: Material shall be emulsified asphalt, Grade RS-2, SS-1, or SS-1H meeting requirements of FDOT Specification 916-4.

2.7 ASPHALT:

A. Asphalt for surfacing the designated area shall be hot-plant mix and all materials shall conform to the requirements of Section 331 of the Standard Specifications. Portions of the referenced specification that are obviously not applicable for the type of work to be done shall be disregarded.

B. Asphalt for leveling shall be in conformance with Section 331 of the Standard Specifications.

C. Aggregate: Asphalt aggregate shall meet the requirements of the Standard Specifications.

D. Submit test results from a commercial testing laboratory to the ENGINEER to show that the materials meet the quality and gradation requirements.

E. Submit to the ENGINEER mix designs for each type of asphalt from each plant.

F. Extension Grade Rings: Extension grade rings shall be steel or cast iron, with ground surfaces and a minimum height of 1 inch to match manhole cover size.

PART 3 - EXECUTION

3.1 REMOVAL OF EXISTING BITUMINOUS SURFACE

A. ASPHALTIC: Asphaltic surfaces shall be removed from the base prior to reworking the base. The materials removed shall be disposed of off the right-of-way, in areas provided by the CONTRACTOR.

B. BITUMINOUS SURFACE TREATMENT: Existing bituminous surface treatment shall be removed and disposed of, or if directed by the ENGINEER the surfacing can be mixed in with the existing limerock material.

C. REWORKING LIME ROCK BASE: Shall be performed in accordance with Section 210 of the FDOT Standard Specifications.

D. Where there is insufficient base material present, new lime rock material shall be supplied in conformance with Section 210.2 of the Standard Specifications.

F. Brick pavers removed during the work shall remain the property of the OWNER. The CONTRACTOR will separate them from all other excavated material and deposit them at a location to be specified by the ENGINEER.

3.2 COMPACTION

A. Compaction of each layer of base shall be performed in accordance with Section 200 of the FDOT Standard Specifications.

B. Compaction equipment must be adequate in design to provide compaction and obtain the specified density for each layer. Water shall be applied as needed to obtain the specified densities at the CONTRACTOR' sole expense.

C. In-place density and moisture content will be determined by any one or combination of the following methods: ASTM D2922, D1556, D2216, or methods selected by the ENGINEER. Cooperate with this testing work by leveling small test areas designated. Backfill test areas at CONTRACTOR's sole expense. The frequency and location of testing shall be per Section 200 of the FDOT Standard Specifications or as directed by the ENGINEER.

3.3 PREPARATION OF ROADWAY TO BE OVERLAYED: Before construction of the asphalt pavement overlay over the existing roads to be surfaced, all fatty asphalt patches, grease drippings and other objectionable matter shall be entirely removed from the existing pavement. The areas to be surfaced shall be thoroughly cleaned by sweeping to remove dust and other foreign matter.

A. Leveling Course:

1. The ENGINEER and CONTRACTOR will review grades and determine which areas to be surfaced require a leveling course.

2. The CONTRACTOR shall place a layer of tack coat at a rate of 0.05 to 0.12 gallons per square yards over all areas requiring a leveling course.

3. Place sufficient leveling course material over the areas designated to eliminate all depressions and to provide positive drainage over the full width of the roadway overlaid. The CONTRACTOR shall place and compact the leveling course in accordance with Section 330 of the FDOT Standard Specifications.

3.5 CONSTRUCTION OF ASPHALT PAVEMENT OVERLAY:

A. The CONTRACTOR shall place a layer of tack coat at a rate of 0.05 to 0.12 gallons per square yard over all areas to receive asphalt concrete.

B. Lay asphalt over all areas designated to be resurfaced. The asphalt pavement overlay shall be placed in a single-lift to a compacted depth of 1 inch. The new asphalt concrete pavement shall be placed in one or more courses to a compacted depth of 2-inches or as directed by the ENGINEER. The method of proportioning, mixing, transporting, laying processing, rolling the material, and the standards of workmanship shall conform to the applicable requirements of Sections 320, 330, and 331, of FDOT Standard Specifications. At no time shall the coarse aggregate segregated from the mix either from hand spreading or raking of joints be scattered across the paved mat. Such matter shall be collected and disposed of.

C. The ENGINEER will examine the prepared roadway before the paving is begun and bring any deficiencies to the CONTRACTOR's attention to be corrected before the paving is started. Roll each lift of the asphalt concrete and compact to the density specified in the referenced Standard Specifications. The grade line and cross section of the finished surface shall conform to the Drawings. Asphalt or asphalt stains which are noticeable upon surfaces of concrete or materials which will be exposed to view shall be promptly and completely removed.

3.6 CONNECTIONS WITH EXISTING ASPHALT:

A. Where the asphalt is to be connected with an existing roadway surface or other facility, the CONTRACTOR shall be required to modify the existing roadway profile in such a manner as to produce a smooth riding connection to the existing facility.

B. Where it is necessary to remove existing asphalt surfaces or oil mat surfaces to provide proper meet lines and riding surfaces, the CONTRACTOR shall mill the existing surface so that there will be sufficient depth to provide a minimum of 1 1/2 inch of asphalt, and the waste material shall be disposed of to the satisfaction of the ENGINEER. Prior to placing the asphalt, these areas shall be tacked. Meet lines shall be saw cut straight and edges shall be vertical. The edges of meet line cuts shall be painted with tack coat material prior to placing asphalt. After placing the asphalt, the meet line shall be sealed by painting with a tack coat material and immediately covered with clean, dry sand.

3.7 SURFACE TOLERANCE NEW ASPHALT CONCRETE

A. Tests for conformity with the specified grade shall be made by the CONTRACTOR immediately after initial compression. Any variation shall be immediately corrected by the removal or addition of materials and by continuous rolling.

B. The completed surface of the pavement shall be of uniform texture, smooth, uniform as to grade, and free from defects of all kinds. The completed surface shall not vary more than 1/8-inch from the lower edge of a 10-foot straightedge placed on the surface along the centerline or across the trench.

C. After completion of the final rolling, the smoothness and grade of the surface shall again be tested by the CONTRACTOR.

D. When deviation in excess of the above tolerances are found, the pavement surfaces shall be corrected as stated in Section 330-12.5 of the FDOT Standard Specifications for Road and Bridge Construction.

E. All areas in which the surface of the completed pavement deviates more than twice the allowable tolerance described above shall be removed and replaced to the satisfaction of the ENGINEER.

F. All costs involved in making the corrections of defects described above shall be borne by the CONTRACTOR and no compensation will be made for this work.

3.8 SAMPLES

A. If directed by the ENGINEER, the CONTRACTOR shall without additional charge, provide the ENGINEER with test results of samples of asphalt concrete cut from the completed pavement or the individual courses thereof. Provide a minimum of three test cores located as directed by the ENGINEER. He shall also provide the ENGINEER with test results of samples of the uncompressed asphalt concrete mixtures, and all materials incorporated into the work.

3.9 WEATHER CONDITIONS

A. Asphalt shall not be applied to wet material. Asphalt shall not be applied during rainfall or any imminent storms that might adversely affect the construction. The ENGINEER will determine when surfaces and materials are dry enough to proceed with construction.

3.10 PROTECTION OF STRUCTURES:

A. Provide whatever protective coverings may be necessary to protect the exposed portions of bridges, fences, buildings, walls, culverts, curbs, gutters, posts, guard fences, road signs, and any other structures from splashing oil and asphalt from the paving operations. Remove any oil asphalt dirt, or any other undesirable matter that my come upon these structures by reason of the paving operations.

3.11 UTILITY APPURTENANCE EXTENSIONS:

A. Where valve boxes, manholes, catch basins, inlets or other appurtenances are within the area to receive asphalt pavement overlay, these appurtenances shall be raised so their top is level with the finished elevation or the overlay layer. Consider any delays or costs experienced from such obstructions as incidental to the paving operation. Protect all covers during asphalt application.

B. When valve boxes, manholes, catch basins, inlets or other appurtenances are raised the asphalt pavement will be saw cut and removed a minimum of one foot from the excavated area. The excavated area will be backfilled with crushed lime rock per section 2.4 LIME ROCK BASE COURSE of these specifications and compacted per section 3.3 COMPACTION of these specifications. Density tests will be taken at all locations or as directed by ENGINEER where appurtenances are raised and backfilled as above. The CONTRACTOR may opt to backfill the excavated areas with a minimum of 6 inches of 4000 PSI concrete.

C. Place manhole ring extensions on all manholes. If a 1-inch ring extension is not available for the existing cover size, the CONTRACTOR shall install an extender the next nominal size higher and taper the asphalt overlay at a rate of 20:1 or 5 percent to match the adjacent roadway. Manholes may be raised with appropriate extension rings with approval from the authority having jurisdiction.

3.12 CLEANUP: Immediately clean up all debris and unused material from the paving operation. Clean all surfaces that have been spattered or defaced as a result of the paving operation.

3.13 EXCESS MATERIALS: Dispose of all excess materials outside the limits of the project. Make arrangements for the disposal and bear all costs or retain any profit incidental to such disposal.

END OF SECTION

SECTION 02575
SURFACE RESTORATION

PART 1 - GENERAL

1.1 WORK INCLUDED

A. This section covers the work necessary to:

1. Install or replace all pavement, curbs, sidewalks, shoulders rock surfacing, swales, shoulders and other street features damaged either directly or indirectly by the operations incidental to the construction described in other Sections of these Specifications, or required for new installations.

2. Perform full reconstruction of pavement.

3. Perform full reconstruction of swales and shoulders.

B. Where the materials, construction procedures, degree of compaction of materials, and the method of control and testing, as required in these Specifications differ from the FDOT requirements, the more stringent requirements shall apply.

C. Cold patch asphalt shall be required for temporary restoration or “make safe” measures and is incidental to the contract.

D. Submittals are required for all products identified in this section.

E. The term "Standard Specifications" is used; such reference shall mean the most current edition of Florida Department of Transportation Standard Specification for Road and Bridge Construction. The Standard Specifications shall be considered as part of this section of the Specifications; below are Listed references for the contractor’s convenience; the contractor shall be responsible for obtaining and incorporation in the contract all of the Standard Specification’s and the most current revisions that apply to this contract scope of work. The contractor shall document in his daily reports the required Standard Specifications that are used.

F. Any reference of the following “FDOT”, “Agency” “Engineer” in the References; shall be considered to be the Owner (City of Key West) for this contract. Disregard all Basis of Payments in the FDOT specs. Payment shall be as per the Contractors Bid prices.

PART 2 - PRODUCTS

2.1 GENERAL

A. All materials for replacement of existing base course and asphalt surfacing shall conform to the FDOT Specifications except as modified herein.

B. The CONTRACTOR will be responsible for furnishing satisfactory materials that meet the Specifications and shall make such tests during the course of the work as are necessary to assure that the quality of the material used meets the Specifications.

2.2 RELATIVE COMPACTION

A. "Relative compaction" is defined as the ratio, in percent, of the as-compacted field dry density to the laboratory maximum dry density as determined by ASTM D1557. Corrections for oversize material may be applied to either the as-compacted field dry density or the maximum dry density, as determined by the Engineer.

2.3 OPTIMUM MOISTURE CONTENT

A. "Optimum moisture content" shall be determined by the ASTM standard specified to determine the maximum dry density for relative compaction. Field moisture content shall be determined on the basis of the fraction passing the 3/4-inch sieve.

2.4 LIME ROCK BASE COURSE

A. Aggregate quality and gradation shall confirm to Section 911 of the FDOT Standard Specifications for Road and Bridge Construction.

2.5 IMPORTED BASE COURSE ACCEPTANCE

A. Imported base course materials specified in this section are subject to the following requirement:

1. All tests necessary for the Contractor to locate an acceptable source of imported material shall be made by the Contractor. Certification that the material conforms to the Specification requirements along with copies of the test results from a qualified commercial testing laboratory shall be submitted to the Engineer for acceptance at least 10 days before the material is required for use. All material samples shall be furnished by the Contractor at the Contractor's sole expense. Samples shall be representative and be clearly marked to show the source of the material is required for use. All material samples shall be furnished by the Contractor at the Contractor's sole expense. Samples shall be representative and be clearly marked to show the source of the material and the intended use on the project. Sampling of the material source shall be done by the Contractor in accordance with ASTM D75. Notify the Engineer at least 24 hours proper to sampling. The Engineer may, at the Engineer's option, observe the sampling procedures. Tentative acceptance of the material source shall be based on an inspection of the source by the Engineer and/or the certified test results submitted by the Contractor to the Engineer, at the Engineer's discretion. No imported materials shall be delivered to the site until the proposed source and materials tests have been tentatively accepted in writing by the Engineer. Final acceptance will be based on tests made on samples of material taken from the completed and compacted course. The completed course is defined as a course or layer that is ready for the next layer or the next phase of construction.

2. Gradation tests by the Contractor shall be made on samples taken at the place of production prior to shipment. Samples of the finished project for gradation testing shall be taken from each site for prepared materials or more often as determined by the Engineer, if variation in gradation is occurring, or if the material appears to depart from the Specifications. Test results shall be forwarded to the Engineer within 48 hours after sampling.

3. If tests conducted by the Contractor or the Engineer indicate that the material does not meet Specification requirements, material placement which does not meet Specification requirements, material placement will be terminated until corrective measures are taken. Material which does not conform to the Specification requirements and is placed in the work shall be removed and replaced at the Contractor's sole expense. Sampling and testing performed by the Contractor shall be done at the Contractor's sole expense.

2.6 BITUMINOUS PRIME AND TACK COAT

A. Prime Coat: Material shall be cutback asphalt, Grade RC-70 or RC-250 meeting FDOT Specification 916-2, or other material acceptable to the ENGINEER and meeting FDOT Specifications.

B. Tack Coat: Material shall be emulsified asphalt, Grade RS-2, SS-1, or SS-1H meeting requirements of FDOT Specification 916-4.

2.8 ASPHALT

A. The asphalt shall be Type SP 9.5 or SP 12.5 in conformance with the most current, FDOT Specifications. Modification for Key West application may be used upon acceptance by the ENGINEER.

B. Aggregate: Asphalt concrete shall meet the requirements of FDOT Specifications.

C. Submit test results from a commercial testing laboratory to the ENGINEER to show that the materials meet the quality and graduation requirements.

2.9 CONCRETE

A. Refer to Section 03002, Concrete Curbs and Sidewalks

2.10 FLOWABLE FILL

A. Refer to Repairs to Asphalt Trench Detail for Flowable Fill use and specification.

2.11 TRAFFIC STRIPING MARKINGS

A. The CONTRACTOR shall place and maintain temporary striping markings throughout the course of the work until the permanent striping marking is placed on the final roadway surface. Temporary striping shall be 20 mils. As Per FDOT Section 711.

2.12 SWALE/SHOULDER FILL

A. Fill for swale/shoulder reconstruction shall be washed #57 stone.

PART 3 - EXECUTION

3.1 CONSTRUCTION PROCEDURE

A. Trench Repair backfill shall be as specified in Section 02221 FAILED TRENCH RESTORATION / EXCAVATION AND BACKFILL.

B. Replace all bituminous and concrete pavements damaged or removed under this Contract with asphalt regardless of original type.

C. In addition to the requirements set forth herein, the work shall conform to the applicable workmanship requirements of the state highway or municipal specifications.

3.2 REMOVAL OF PAVEMENT

A. Removal of all pavement shall conform to Section 02221 FAILED TRENCH RESTORATION / EXCAVATION AND BACKFILL and payment for removal shall be per Bid line item.

3.3 STREET MAINTENANCE

A. Maintain all trenches as specified under Section 02221 FAILED TRENCH RESTORATION / EXCAVATION AND BACKFILL.

3.4 SUBGRADE

A. Backfill and compaction of trenches shall be as specified in Section 02221 FAILED TRENCH RESTORATION / EXCAVATION AND BACKFILL. Shape sub-grade to required line, grade, and cross section. Remove all soft or otherwise unsuitable material disclosed and replace with suitable material. Fill holes and depressions to the required grade and cross sections with material from the excavation. The finished sub-grade shall be within a tolerance of plus or minus 0.08 of a foot of the grade and cross section, and shall be smooth and free from irregularities and at the density of 95 percent ASTM D1557.

3.5 CONSTRUCTION OF BASE COURSE

A. Obtain ENGINEER'S acceptance of the sub-grade prior to placing any base course material on the sub-grade. Place BASE COURSE in maximum 6-inch loose lifts and compact to not less than 98 percent relative compaction.

3.6 BASE COURSE REPAIR

A. General:

1. The base course repair work shall consist of constructing a compacted lime rock base course, of the thickness and width in accordance with FDOT Specifications.

2. All base course repair work shall conform to the grades and cross sections of the existing pavement. The finished grade of the lime rock base shall be level with the existing base course. The lime rock for base construction shall be Miami Lime rock, in accordance with Section 911, FDOT Specifications. The base course shall be constructed in accordance with all applicable provisions of Section 200, FDOT Specifications.

3. If at any time the sub-grade material becomes mixed with the base course materials, the Contractor shall, without additional compensation, dig out and remove the mixture, reshape, and re-compact the sub-grade and replace the materials removed with the clean rock which shall be watered and rolled until satisfactorily compacted.

3.7 DEPTH OF LAYERS

A. The base course shall be constructed in lifts of not more than 12 inches in thickness prior to compaction.

3.8 SPREADING MATERIALS

A. The base course material may be spread by any method that will result in an even distribution of the material upon the roadway without perceptible separation in gradation.

B. Should there occur during any stage of the surfacing or stockpiling, a separation of the coarser from the finer materials causing serious lack of uniformity in the grading, the CONTRACTOR shall immediately make changes in the method of handling such as will prevent separation and meet acceptance of the ENGINEER.

C. Equipment such as scrapers and other equipment essentially used for earth excavation will not be permitted.

3.9 ROLLING

A. Compaction of each layer of base shall be performed in accordance with Section 200 of the FDOT Standard Specifications for Roadway and Bridge Construction.

B. Compaction equipment shall be adequate in design to provide compaction and obtain the specified density for each layer. Water shall be applied as needed to obtain the specified densities at the CONTRACTOR'S sole expense.

C. In-place density and moisture content will be determined by any one, or combination of, the following methods: ASTM D2922, 1556, D2216, or other methods selected by the ENGINEER. Cooperate with this testing work by leveling small test areas designated. Backfill of the test areas shall be at the CONTRACTOR'S sole expense. The frequency and location of testing shall be a minimum of one test per intersection, with additional test required in the intersection if the original test fails, at the ENGINEERS direction.

D. Each layer of base course shall be placed and compacted to the specified density before a succeeding layer is placed.

E. The CONTRACTOR shall construct the base course in an orderly manner so that a reasonable length of trench will be ready for testing and a reasonable amount of time will be allowed for the ENGINEER to perform tests and obtain the test results during normal working hours.

F. Prior to testing any completed base course, the CONTRACTOR shall show reasonable proof that the completed section meets the requirements specified.

3.10 CORRECTION OF SURFACE DEFECTS

A. Should irregularities develop in any surface during or after rolling, they shall be remedied by loosening the surface and correcting the defects; after which the entire areas, including the surrounding surface, shall be re-rolled until thoroughly compacted. The finished surface shall be true to the proper grade and crown before proceeding with the surfacing.

3.11 SURFACE TOLERANCES

A. The finished surface of the base course at any point shall be within plus or minus 0.04 foot of the grade required to provide the specified pavement thickness.

3.12 BITUMINOUS PRIME AND TACK COAT

A. The provisions of FDOT Specifications shall be in effect for the construction of the prime coat.

B. The bituminous prime coat shall be applied to the lime rock base immediately prior to the placement of asphalt concrete.

C. The rate of application of the bituminous prime coat shall comply with FDOT Specifications.

D. The provisions of FDOT Specifications shall be in effect for the construction of the tack coat.

E. The bituminous tack coat shall be applied to existing asphalt surfaces prior to the placement of new asphalt, between layers of asphalt concrete surface courses, surfaces of concrete footings that will come in contact with the asphalt concrete pavement, and vertical faces of all longitudinal and transverse joints that have become compacted or cooled.

F. The rate of application for the bituminous tack cost shall comply with FDOT Specifications.

3.13 ASPHALT PAVEMENT REPLACEMENT

A. Preparation for Paving:

1. A prime coat shall be applied over the full length of the repair, and asphalt pavement shall not be placed until the prime coat has cured as per the manufacturer's recommendations.

2. Should any holes, breaks, or irregularities develop in the roadway surface after the prime coat has been applied, they shall be patched with asphalt concrete immediately in advance of placing the asphalt concrete.

3. After the maintenance, patching, or repair work has been completed and immediately prior to placing the asphalt concrete pavement, the surface of the prime coat shall be swept clean of all dirt, dust, or other foreign matter.

B. The proposed pavement construction schedule consists of immediately paving over storm drain, sewer line, and sewer service line trenches as soon as possible after it has been determined that sub-base and base have achieved required compactions. The base course will be brought up to the elevations indicated on the Drawings and asphalt placed to bring grade up to match existing pavement elevations.

3.14 ASPHALT CONCRETE PAVEMENT

A. Workmanship in producing, hauling, placing, compacting, and finishing asphalt concrete shall conform to the applicable portions of the FDOT Specifications.

3.15 CONSTRUCTION OF COURSES

A. The asphalt concrete pavement shall be constructed in one or more courses as required in the FDOT Specifications. Asphalt shall be no less than 1 ½ inch thick final.

B. Rolling shall continue until all roller marks are eliminated and the minimum percent compaction stated in the FDOT Specification has been obtained.

3.16 SURFACE TOLERANCE

A. Tests for conformity with the specified grade shall be made by the CONTRACTOR immediately after initial compression. Any variation shall be immediately corrected by the removal or addition of materials and by continuous rolling.

B. The completed surface of the pavement shall be of uniform texture, smooth, uniform as to grade, and free from defects of all kinds. The completed surface shall not vary more than 1/ 8 inch from the lower edge of a 10-foot straightedge placed on the surface along the centerline or across the trench.

C. After completion of the final rolling, the smoothness and grade of the surface shall again be tested by the CONTRACTOR.

D. When deviations in excess of the above tolerances are found, the pavement surface shall be corrected as stated in Section 330-12.4 of the FDOT Standard Specifications for Road and Bridge Construction.

E. All areas in which the surface of the completed pavement deviates more than twice the allowable tolerances described above shall be removed and replaced to the satisfaction of the ENGINEER.

F. All costs involved in making the corrections of defects described above shall be borne by the CONTRACTOR and no compensation will be made for this work.

3.19 SAMPLES

A. If directed by the ENGINEER, the CONTRACTOR shall without additional charge, provide the ENGINEER with test results of samples of asphalt concrete cut from the completed pavement or the individual courses thereof. Provide a minimum of three test cores located as directed by the ENGINEER. He shall also provide the ENGINEER with test results of samples of the uncompressed asphalt concrete mixtures, and all materials incorporated in the work.

3.20 WEATHER CONDITIONS

A. Asphalt shall not be applied to wet material. Asphalt shall not be applied during rainfall or any imminent storms that might adversely affect the construction. The ENGINEER will determine when surfaces and materials are dry enough to precede with construction.

3.22 PROTECTION OF STRUCTURES

A. Provide whatever protective coverings may be necessary to protect the exposed portions of bridges, culverts, curbs, gutters, posts, guard fences, road signs, and any other structures from splashing oil and asphalt from the paving operations. Remove any oil, asphalt, dirt, or any other undesirable matter that may come upon these structures by reason of the paving operations.

B. Where water valve boxes, manholes, catch basins, or other underground utility appurtenances are within the area to be surfaced, the resurfacing shall be level with the top of the existing finished elevation of these facilities. If they are not in accordance with the proposed finished surface elevations the CONTRACTOR shall notify the proper authority and either raise or lower the appurtenances or make arrangements with that authority and either raise or lower the appurtenances or make arrangement with that authority for having the facilities altered before proceeding with the resurfacing around the obstruction. The CONTRACTOR will be responsible for making certain that appurtenances are brought to proper grade to conform to finished surface elevations and any delays experienced from such obstructions will be considered as incidental to the paving operation. No additional payment will be made. Protect all covers during asphalt application.

3.23 EXCESS MATERIALS

A. Dispose of all excess materials in complete compliance with Federal, State and Local Statues. Make arrangements for the disposal and bear all costs or retain any profit incidental to such disposal.

3.24 CONTRACTOR'S RESPONSIBILITY

A. Settlement of replaced pavement over trenches within the 2 - year warranty period shall be considered the result of improper or inadequate compaction of the sub-base or base materials.

The CONTRACTOR shall promptly repair all pavement deficiencies noted during the warranty period at the CONTRACTOR'S sole expense.

3.25 SIDEWALKS AND CURBS

A. Replace concrete sidewalks and curbs to the same section width, depth, line, and grade as that damaged. The minimum thickness of sidewalks shall be 4 inches. Driveways will be replaced with a minimum thickness of 6". Cut ends of existing curb to a vertical plane. Prior to replacing the sections, properly backfill, and compact the trench to prevent subsequent settlement.

B. Replace concrete sidewalks and curbs between scored joints and make replacement in a manner that will avoid a patched appearance. Provide a minimum 2-inch thick compacted leveling course of clean, crushed rock or gravel of quality herein before specified. Finish concrete surface similar to the adjacent sidewalks while meeting all current codes. Cut back sidewalks as required to ensure transition from existing to new sidewalks meets ADA code.

C. Concrete shall be a 3000 psi minimum rating.

D. Refer to Specification Section 03002.

3.25 SHOULDER AND SWALE RESTORATION

A. Refer to this section and Swale Restoration Detail for shoulder and swale reconstruction requirements.

END OF SECTION

SECTION 02731
ROADWAY SIGNS

PART 1 - GENERAL

1.1 WORK INCLUDED

A. This section covers the work necessary for establishing a standard of signs, including furnishing and placing of signs and posts.

B. See CONDITIONS OF THE CONTRACT and Division 1, GENERAL REQUIREMENTS, which contain information and requirements that apply to the work specified herein and are mandatory for this project.

C. Areas disturbed by the CONTRACTOR whether inside or outside the limits of the construction area shall be restored in accordance with this section. Areas outside the limits of construction shall be restored at the CONTRACTOR'S sole expense.

1.2 SUBMITTALS

A. Shop Drawings: Product labels/data sheets.

PART 2 – PRODUCTS AND MATERIALS

2.1 SIGNS

A. Signs shall be 080 5052-H38 Aluminum w/ #1200 Alodine finish. Finish shall also be high intensity.

B. Color and dimensions shall be standard MUTCD compliant.

2.2 POSTS

A. Frangible supports: Provide posts for all frangible sign assemblies consisting of aluminum tubes up to 3-1/2 inches outside diameter with 3/16 in. wall thickness, or galvanized steel U-channel up to 3 lbs. /ft. in accordance with FDOT Roadway and Traffic Design standards, Index Nos. 11860 for frangible sign supports.

B. Provide all single column signs mounted on a tubular post, not requiring a foundation, with a standard extruded aluminum sign bracket clamped on the post 12 inches below grade. Match bracket size with the post diameter.

2.3 CONCRETE

A. For footings, use Class II concrete meeting the requirements of FDOT Section 346.

2.4 ALUMINUM MATERIALS

A. Aluminum materials, shall meet the general provisions of FDOT Section 965-1.

B. Channels: For aluminum channels, meet the requirements of ASTM B 308 [ASTM B 308M].

C. Bolts, Nuts, and Lock washers: Ensure that finished bolts and washers are given an anodic coating of at least 0.0002 inch in thickness and are chromate-sealed.

2.5 STEEL

A. Only use structural steel, including bolts, nuts, and washers that have been hot dip galvanized or metalized after fabrication. Perform hot dip galvanizing in accordance with ASTM A 123 [ASTM A 123M] or ASTM A 153 [ASTM 153M] and metalizing in accordance with FDOT Section 562. For galvanized steel members, meet the general requirements of Standard FDOT Section 962 and the specific requirements of 962-7.

B. Specific Uses of Aluminum and Galvanized Steel: Use aluminum bolts nuts, and hardware to connect parts of the cast base. Use galvanized steel anchor bolts for anchoring base plates to concrete bases and for the nuts and washers therefore. For all other metal parts, the ENGINEER will allow galvanized steel as an alternate to aluminum.

PART 3 - EXECUTION

3.1 ACCEPTANCE OF SIGNS

A. Manufacturer's Certification and Recommendations: Ensure that the sign manufacturer provides producer's certifications of materials incorporated into the signs. Ensure that the sign manufacturer certifies that the delivered signs conform to this Section and provides recommendations for storing and repairing signs.

B. Packaging and Shipping: Have the manufacturer package and ship the signs in a manner which will minimize possible damage.

C. Storage of Signs: If signs are stored prior to installation, store them in accordance with the manufacturer's recommendations.

D. Sign Inspection: Do not install signs until the ENGINEER inspects them for conformance with this Section. Provide all manufacturer certifications and recommendations prior to the ENGINEER's inspection. The ENGINEER will inspect the signs upon delivery to the storage or project site and again at the final construction inspection. Repair and replace signs deemed unacceptable by the ENGINEER at no expense to the City.

E. Imperfections and Repairs: Repair and replace signs containing imperfections or damage regardless of the kind, type, or cause of the imperfections or damage. Make repairs according to the manufacturer's recommendations and to the satisfaction of the ENGINEER. Ensure that completed repairs provide a level of quality necessary to maintain the service life warranty of the sign and are satisfactory in appearance to the ENGINEER.

3.2 FOOTINGS FOR SIGNS, POSTS, AND SUPPORTS

A. Excavation and Backfilling: Perform excavation and backfilling for the footings in accordance with FDOT Standard Section 125, with the exceptions that no specific density is required and that the backfill may be tamped in 4 inches maximum layers. Use material that is at near optimum moisture and neither dry or saturated, and tamp to the extent directed by the ENGINEER. The City may require that the backfilling be done with poured concrete.

B. Removal of Footings: When existing ground mounted signs are to be modified or removed, immediately remove supports and footings that project more than 6 inches above the ground surface after removing sign panel from the assembly. Remove existing footings to a depth of at least 12 inches below the ground surface. The cost will be included in the Contract unit price of the item to which it is incidental.

END OF SECTION

SECTION 03002
CONCRETE CURBS AND SIDEWALKS

PARK 1 – GENERAL

1.1 WORK INCLUDED: This section covers all formed, fiber mesh reinforced concrete work as required by the Project indicated on the plans or specified by the ENGINEER. **The CONTRACTOR is responsible for all site work and construction supervision required to meet ADAAG /ADA specifications when placing concrete.**

1.2 SUBMITTALS DURING CONSTRUCTION:

A. Submittal during construction shall be made as required in the Submittal section of these documents.

PART 2 - MATERIALS

2.1 FORMS:

A. Materials for curb forms shall be 2-inch dressed dimension lumber, fiberglass, or metal of equal strength, free from defects which would impair the appearance or structural quality of the complete curb. Where short-radius forms are required, 1-inch dressed lumber or plywood may be used. Form material for the face of the curb shall not have any horizontal joints closer than 7-inches from the top of the curb. Provide stakes and bracing materials as required to hold forms securely in place. Metal forms shall be subject to approval by the ENGINEER. Forms are incidental to the Contract Price.

B. Materials for sidewalk forms shall be 2-inch dressed lumber straight and free from defects or fiberglass or standard metal forms may be used. Where short radius forms are required, 1-inch dressed lumber is required to hold forms securely in place.

2.2 GRANULAR FILL:

A. Natural sand not having any piece of material larger than 1-inch, free from dirt, clay balls, or organic material, well graded from coarse to fine, containing sufficient finer material for proper compaction, and less than ten (10) percent by weight passing the No. 200 sieve. Payment shall be per the unit Price bid.

2.3 EARTH FILL:

A. Earth must be free from rocks 2-inches or larger and other foreign materials. Earth fill is incidental to contract Prices.

2.4 EXPANSION JOINT FILLERS:

A. Expansion joint fillers shall conform to FDOT Standard Specifications for Road and Bridge Construction 2000. Submit complete information regarding joint fillers for approval by the ENGINEER. Payment shall be included in unit price bid for sidewalk

2.5 CONCRETE:

A. Concrete shall be ready-mixed conforming to ASTM C 94, Alternate 2, and shall have a compressive strength of 3,000 psi at 28 days. Maximum size of aggregate shall be 1-inch to 1-1/2 inches. Slump shall between 2 and 4 inches. Submit complete information regarding mix to the ENGINEER for review in accordance with the requirements of the referenced ASTM Specification.

2.6 DETECTABLE WARNING SYSTEM:

A. Detectable Warning Systems on walking surfaces shall be "Endicott Handicap Detectable Warning Paver" or equal with raised truncated domes and specified color and must meet federal ADAAG guidelines. Payment shall be per unit Price bid.

2.7 CONCRETE SEALING:

A. Shall be "Lambert Clear Colorseal" and "Lambert Waterban 90 Siloxane Resin" or equal and follow all manufacturers' instructions for each installation. Payment shall be per unit Price bid.

2.8 TRAFFIC MARKING PAINT:

A. Reflective traffic marking paint shall conform to FDOT Specifications Section 971. Paint for curbs shall be Pride Baker Paint brand traffic marking paint or approved equal. Paint and labor shall be incidental to contract price for replacement markings and the unit price bid for new markings.

2.9 ASPHALT:

A. Cold patch asphalt and labor shall be incidental to the contract price for patches surrounding curbs and sidewalks. Hot mix asphalt conforming to FDOT R-3 shall be paid at the unit price bid for Asphalt paving repairs.

2.10 GRASSING:

A. Sod shall be of the St. Augustine Floratam type, conforming to FDOT Division III Section 981 and Division II Section 575. Payment shall be paid as bid in the Proposal.

2.13 ACCEPTANCE OF MATERIALS: All materials shall be subject to inspection for suitability, as the ENGINEER may elect, Prior to or during incorporation into the work.

PART 3 - EXECUTION

3.1 SIDEWALK & CURB EXCAVATION AND BACKFILL:

A. Cut the existing sidewalk regardless of the thickness, with an approved pavement saw or approved pavement cutter wherever sidewalk edges do not follow straight lines. Saw cutting of concrete shall be wet down to reduce air borne contamination. Remove and dispose of sidewalk at the CONTRACTOR's expense.

B. Prior to excavation of the sidewalk the CONTRACTOR's superintendent and the OWNER's ENGINEER or designee shall, together, walk the length of the site marking the limits of the excavation and marking any other pertinent information. Paint shall be supplied by the CONTRACTOR, incidental to the cost of the Contract.

C. At the time of each walk through described in Section 3.1.2, each water meter box and sewer cleanout shall be inspected for structural integrity. Those which are deemed in need of replacement at that time will be supplied by the OWNER or the Florida Keys Aqueduct Authority. Those which meet normal structural and functional standards, and are broken by the CONTRACTOR during the construction process shall be replaced by the CONTRACTOR at his cost.

1. Sewer cleanout boxes shall be made from 100% homogenous polyethylene material having a minimum wall thickness of .550 inch, a compartment size of 12-inches by 20-inches with a clear opening of 10-inches by 17-inches. Provide knockouts or notches in each end sized to allow placement of a 6-inch PVC pipe inside the box. Vertical crush to exceed 20,000 pounds and sidewall loading to exceed 180 pounds per square inch. A flange shall encircle the top area for installation in concrete. Cleanout covers shall be cast of ductile conforming to ASTM A-536-84; grade 60-40-18.The meter box covers shall meet or exceed Federal specifications RR-F-621D for a minimum Proof load of 25,000 pounds on 9”x 9” area. All boxes and covers shall be manufactured by Mid-States Plastics, Mount Sterling, KY. Florida Master Distributor: Okie Dokie Sales, Inc. (888-914-772) or approved equal.

2. Water meter boxes shall be Mid- States MS # 15P meter box or equal, covers shall have cast iron reading lid.

D. As directed by the ENGINEER remove any unsuitable material to such a depth that the addition of the subgrade and granular fill can be placed and compacted. Unsuitable material shall consist of and not be limited to top soil, wood, root matter, stumps, trunks, roots or root systems. Excavation that cannot be accomplished without endangering present structures shall be performed with hand tools.

3.2 PREPARATION OF SUBGRADE:

A. Bring the areas on which curbs and sidewalks are to be constructed to required grade and compact to 95 percent ASTM D 1557 by sprinkling and rolling or mechanical tamping. As depressions occur, refill with approved material and recompact until the surface is at the proper grade.

3.3 PLACING GRANULAR FILL:

A. After the subgrade for sidewalks and curbs is compacted and at the proper grade, spread 4-inches or more of granular fill. Sprinkle with water and compact to 95 percent ASTM D 1557 by rolling or other method. Top of the compacted fill shall be at the proper level to receive the concrete. Granular fill shall be used, when needed, to raise the level of grade to allow for proper thickness of concrete. After spreading fill, compact to 95 per cent.

3.4 SETTING FORMS:

A. Construct forms to the shape, lines, grades, and dimensions as required for proper installation or as called for on the drawings or as directed by the ENGINEER. Stake wood or steel forms securely in place, true to line and grade.

B. Provide forms at front and back of curbs. Forms on the face of the curb shall not have any horizontal joints within seven (7) inches of the top of the curb. Brace forms to prevent change of shape or movement in any direction resulting from the weight of the concrete during placement. Construct short-radius forms to exact radius. Tops of forms shall not depart from grade line more than 1/8-inch when checked with a ten-foot straightedge. Alignment of straight sections shall not vary more than 1/8-inch in ten (10) feet.

3.5 CURB/GUTTER CONSTRUCTION:

A. Construct curbs to line and grade of curbs and gutters removed, as shown on plans or as established or directed by the ENGINEER. Curbs shall conform to FDOT Type "D" or "F" or as directed by the ENGINEER.

B. Handicap ramps shall be constructed at locations shown on the drawings or as directed by the ENGINEER and in conformance with legal requirements.

C. Place preformed asphalt-impregnated expansion joints at intervals not exceeding 100 feet, at the beginning and ends of the curved portions of the curbs and at inlets.

D. Place contraction joints in the curb at intervals not exceeding fifteen (15) feet. Contraction joints shall be of the open joint type and shall be provided by inserting a thin, oiled steel sheet vertically into the fresh concrete to force coarse aggregate away from the joint. The steel sheet shall be inserted the full depth of the curb. Place, process, finish and cure concrete in conformance with the applicable requirements of ACI 614, and this Specification. Whenever the requirements differ, the higher shall govern. After initial set has occurred in the concrete and prior to removing the front curb form, the steel sheet shall be removed with a sawing motion. Finish top of curb with a steel trowel and finish edges with a steel edging tool.

E. As soon as the concrete has set sufficiently to support its own weight, remove the front form and finish all exposed surfaces. Finish formed face by rubbing with a burlap sack or similar device that will produce a uniformly textured surface, free of form marks, honeycombs and other defects. All defective concrete shall be removed and replaced at the CONTRACTOR's sole expense.

F. Upon completion of the curing period, backfill the curb with earth, free from rocks 2-inches and larger and other foreign materials. Tamp backfill firmly in place.

G. Finished curb shall present a uniform appearance for both grade and alignment. Remove any section of curb showing abrupt changes in alignment or grade, or which is more than 1/4-inch away from its location as staked, and construct new curb in its place at the CONTRACTOR's sole expense.

H. Upon completion of the curing period fill with asphalt any street side holes or ruts in the asphalt paving that was created by the installation of the sidewalk or the curb. When required by ENGINEER, saw cut, remove and replace sections as directed.

I. Where curbs that were painted for legal traffic markings (i.e., loading zones, driveways, no parking zones) prior to construction are removed, replaced, repaired or installed. These and any newly constructed curbs and sidewalks shall be repainted by the CONTRACTOR. Painting shall be performed upon completion of the curing period, but not less than seven (7) days have elapsed since pouring the concrete. Curbs are to be painted from the inside edge of the curb to the edge of the pavement.

3.6 SIDEWALK CONSTRUCTION:

A. Sidewalks shall be four-inches or six-inches thick as directed by the ENGINEER.

B. Place preformed asphalt expansion joints as in the adjacent curb, where the sidewalk ends at a curb, around posts, poles, concrete buildings or walls or other objects protruding through the sidewalk, and at locations shown on the Drawings.

C. Provide dummy joints transversely to the walks at locations opposite the contraction joints in the curb and at intervals not exceeding five (5) feet. These joints shall be 1/4-inch by 1-inch weakened plane joints. They shall be straight and at right angles to the surface of the walk.

D. Place, process, finish, and cure concrete in conformance with the applicable requirements of ACI 614 and this Specification. Where the requirements differ, the more rigid specification shall govern.

E. Broom the surface with a fine hair broom at right angles to the length of the walk and tool all edges, joints and markings. Mark the walks transversely at five (5) foot intervals with a jointing tool. Protect the sidewalk from damage for a period of seven (7) days.

F. Sidewalks shall be placed to slope towards the street at a maximum slope of 2% or as otherwise directed by the ENGINEER. All sidewalks shall conform to ADAAG guidelines.

G. Where sidewalks or curbs which were painted for legal traffic markings (i.e., loading zone, driveways, no parking zones) are removed and replaced with new curb or sidewalk or repaired, the CONTRACTOR shall be responsible to paint the new portions of the curbs or sidewalks in accordance with Section CURB CONSTRUCTION 3.5.9.

H. Upon completion of the curing period fill with asphalt, any street side holes or ruts in the asphalt paving that were created by the installation of the curbs or sidewalks.

3.7 GRANITE CURB RESTORATION:

A. Granite Curb Restoration shall take place in locations as directed by the ENGINEER.

B. The existing granite curb shall be removed from the ground and stored in a manner to preserve their quality and quantity as specified in the General Requirements. The CONTRACTOR shall

be solely and directly responsible to the OWNER for any curbing removed during the contract period.

C. After curb removal excavation and backfill shall be performed as specified in Specifications Section 3.1 through 3.4.

D. Curbing shall be reset, prior to sidewalk pour, as specified in the drawings, or as otherwise directed by the ENGINEER.

E. Any pavement disturbed by curb restoration shall be repaired as specified in Section 3.5.8

F. Curbs that were painted with legal traffic markings (i.e., loading zones, driveways) prior to removal shall be repainted as directed by the ENGINEER.

3.8 GRASSING

A. Grassing shall take place in locations as directed by the ENGINEER. All grassing shall be sodding.

B. Sodding: Before sod is laid, correct soft spots and inequalities in grade of prepared bed. Lay so that no voids occur and tamp or roll, brush or rake granular fill with no lumps or stones larger than 3/4-inch over sodded area, water sod thoroughly. Complete sod surface true to finished grade, even and firm.

C. Maintenance:

1. Maintenance period: Begin maintenance immediately after each portion of sod and grass is planted and continue for 8 weeks after all lawn planting is completed.

2. Maintenance Operations: Water to keep surface soil moist. Repair washed out areas by filling with topsoil, liming, fertilizing and seeding. Mow to 3 inches after grass reaches 4 inches in height, and mow frequently enough to keep grass from exceeding 4 inches. Weed by local spot application of selective herbicide only after first planting season when grass is established.

D. Guarantee:

1. If, at the end of the 8-week sod maintenance period, a satisfactory stand of sod or grass has not been produced, the CONTRACTOR shall renovate and resod all unsatisfactory portions thereof immediately.

2. A satisfactory stand is defined as a sodded area that has:

a. No bare spot larger than 3 square feet.
b. not more than 10 percent of total area with bare spots larger than 1 square foot
c. Not more than 15 percent of total area with bare spots larger than 6 inches square.

3. Inspection for Acceptance: Eight weeks after the start of maintenance on the last section of completed sodded area, and on written notice from the CONTRACTOR, the

ENGINEER will within 15 days of such written notice make an inspection to determine if a satisfactory stand has been produced. If a satisfactory stand has not been established, another inspection will be made after written notice from the CONTRACTOR that the sodded area is ready for inspection following the next growing season.

3.9 DETECTABLE WARNING SYSTEM:

A. Detectable Warning Systems on walking surfaces shall be "Endicott Handicap Detectable Warning Paver" or equal with raised truncated domes and specified color or equal and follow all manufacturers' instructions for installation and sealing and meet federal ADAAG guidelines.

3.10 CONCRETE SEALING:

A. Shall be Lambert Colorseal and /or Lambert Waterban 90 Siloxane Resin or equal and follow all manufacturers' instructions for each installation.

END OF SECTION

SECTION 03240
SYNTHETIC FIBER REINFORCEMENT

PART 1 GENERAL

1.1 SECTION INCLUDES

A. Polypropylene fibers used as concrete secondary reinforcement.

1.2 RELATED SECTIONS

A. Section 03002 – Concrete Curbs, Concrete Placement and Sidewalks.

B. Section 01300 - Submittals.

C. Section 01025 – Measurement & Payment.

1.3 REFERENCES

A. ASTM C 94 - Standard Specification for Ready-Mixed Concrete.

B. ASTM C 1116 - Standard Specification for Fiber-Reinforced Concrete and Shotcrete.

C. Southwest Certification Services (SWCS), Omega Point Laboratories No. 8662-1.

D. UL Report File No. R8534-11.

1.4 SUBMITTALS

A. Comply with Section 01300 - Submittals.

B. Product Data: Submit manufacturer's product data, including application rate and mixing instructions.

C. Manufacturer's Certification:
   1. Submit manufacturer's certification that synthetic fiber reinforcement complies with specified requirements.
   2. Submit evidence of manufacturer's ISO 9001:2000 certification.
   3. Submit evidence of satisfactory performance history of synthetic fiber reinforcement.

1.5 QUALITY ASSURANCE

A. Manufacturer's Qualifications:
   1. Synthetic fiber reinforcement manufactured in ISO 9001:2000 certified facility.
   2. Minimum 10-year satisfactory performance history of specified synthetic fiber reinforcement.

1.6 DELIVERY, STORAGE, AND HANDLING

A. Delivery: Deliver synthetic fiber reinforcement in manufacturer's original, unopened, undamaged containers and packaging, with labels clearly identifying product name, unique identification number, code approvals, directions for use, manufacturer, and weight of fibers.

B. Storage:
   1. Store synthetic fiber reinforcement in clean, dry area indoors in accordance with manufacturer's instructions.
   2. Keep packaging sealed until ready for use.

C. Handling: Protect synthetic fiber reinforcement during handling to prevent contamination.

PART 2 PRODUCTS

2.1 MANUFACTURER

A. Propex Operating Company, LLC, PO Box 22788, Chattanooga, Tennessee 37422. Toll Free (800) 621-1273. Website www.fibermesh.com. E-mail fibermesh@propexglobal.com.

B. Or Equal

2.2 SYNTHETIC FIBER REINFORCEMENT

A. Synthetic Fiber Reinforcement: Fibermesh 150.
   1. Material: 100 percent virgin homopolymer polypropylene multifilament fibers, containing no reprocessed olefin materials.
   2. Conformance: ASTM C 1116, Type III.
   3. Fire Classifications:
      a. UL Report File No. R8534-11.
      b. Southwest Certification Services (SWCS), Omega Point Laboratories No. 8662-1.
   4. Fiber Length: Graded
   5. Alkali Resistance: Alkali proof.
   6. Absorption: Nil.
   7. Specific Gravity: 0.91.
   8. Melt Point: 324 degrees F

PART 3 EXECUTION

3.1 MIXING

A. Add synthetic fiber reinforcement to concrete mixture in accordance with manufacturer's instructions.

B. Add synthetic fiber reinforcement into concrete mixer before, during, or after batching other concrete materials.

C. Application Rate: Add synthetic fiber reinforcement at standard application rate of 1.5 pounds per cubic yard (0.90 kg/m^3) of concrete.

D. Mix synthetic fiber reinforcement in concrete mixer in accordance with mixing time and speed of ASTM C 94 to ensure uniform distribution and random orientation of fibers throughout concrete.

END OF SECTION

PART 6

DETAILS

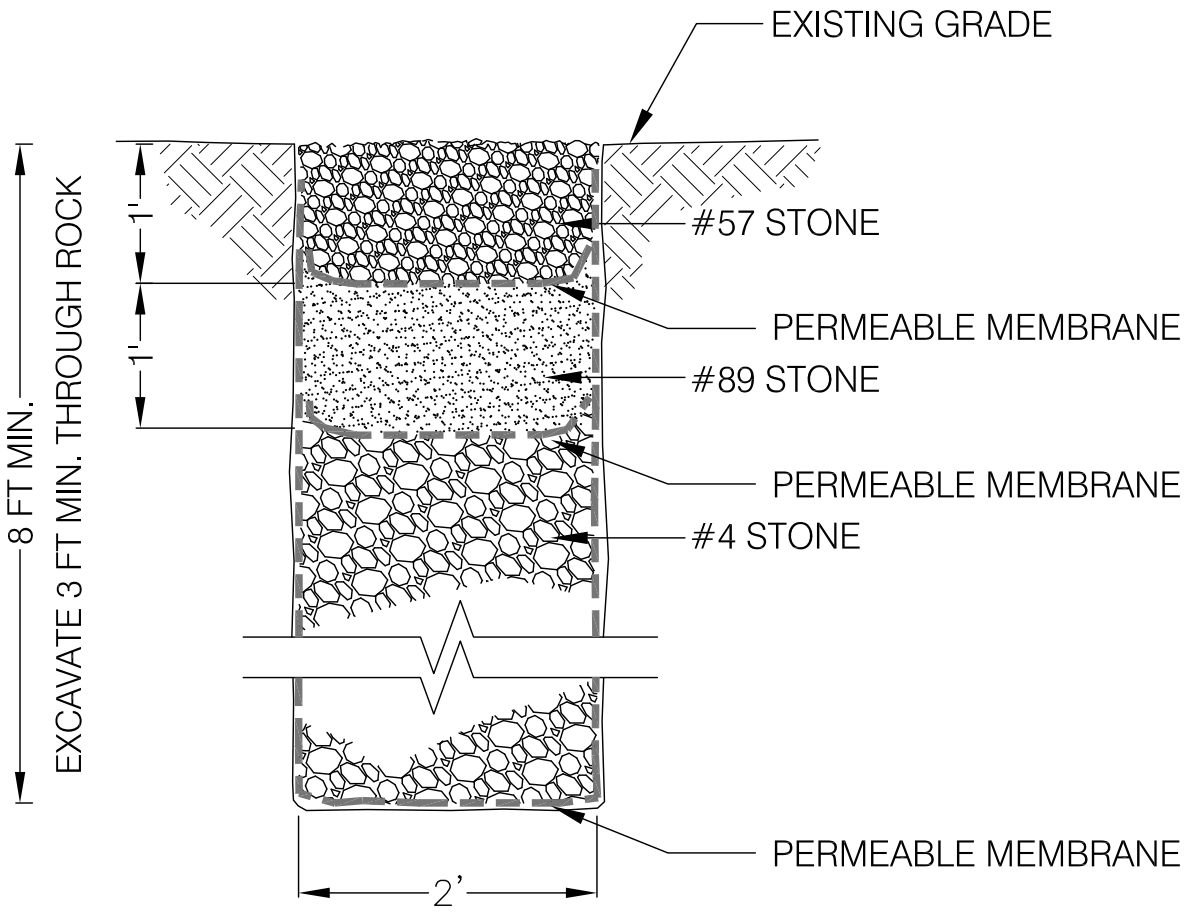

COMPACT IN 6" - 8" LIFTS W/ VIBRATORY COMPACTOR.

SEEPAGE TRENCH

NTS

City of Key West Engineering Services 3132 Flagler Avenue, Key West, FL 33040	TITLE	SEEPAGE TRENCH DETAIL (TYPICAL)		
	DRAWN GJV SCALE NTS	SECTION		Feb 2015 SHEET 1 of 1

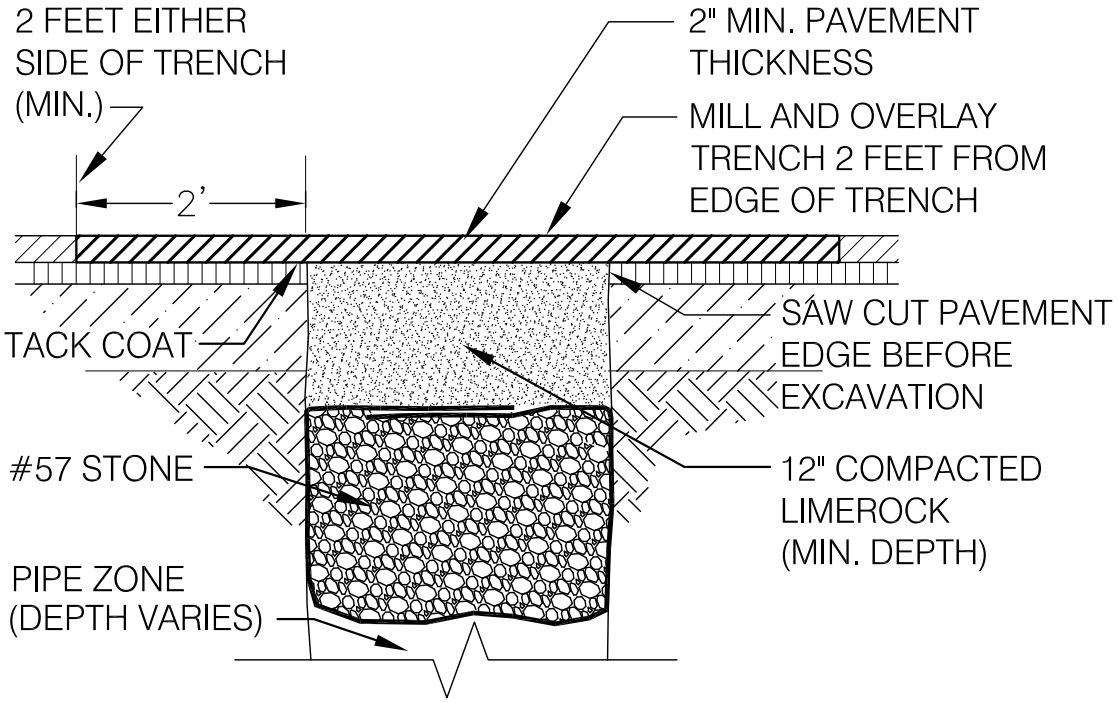

REPAIRS FOR ASPHALT TRENCH

NTS

1. Remove unsuitable Backfill Material above top of pipe. Replace with Select Backfill Material and compact in accordance with Section 125 of FDOT Standard Specifications
2. Adjust all ex. meter boxes and manhole rings impacted by construction.
2. Compact fill in 6" - 8" lifts w/ vibratory compactor.

SEAL OF THE CITY OF KEY WEST, FLORIDA	City of Key West	TITLE REPAIRS FOR ASPHALT TRENCH		
	Engineering Services 3132 Flagler Avenue, Key West, FL 33040	DRAWN GJV SCALE NTS	SECTION	Feb 2015 SHEET 1 of 1

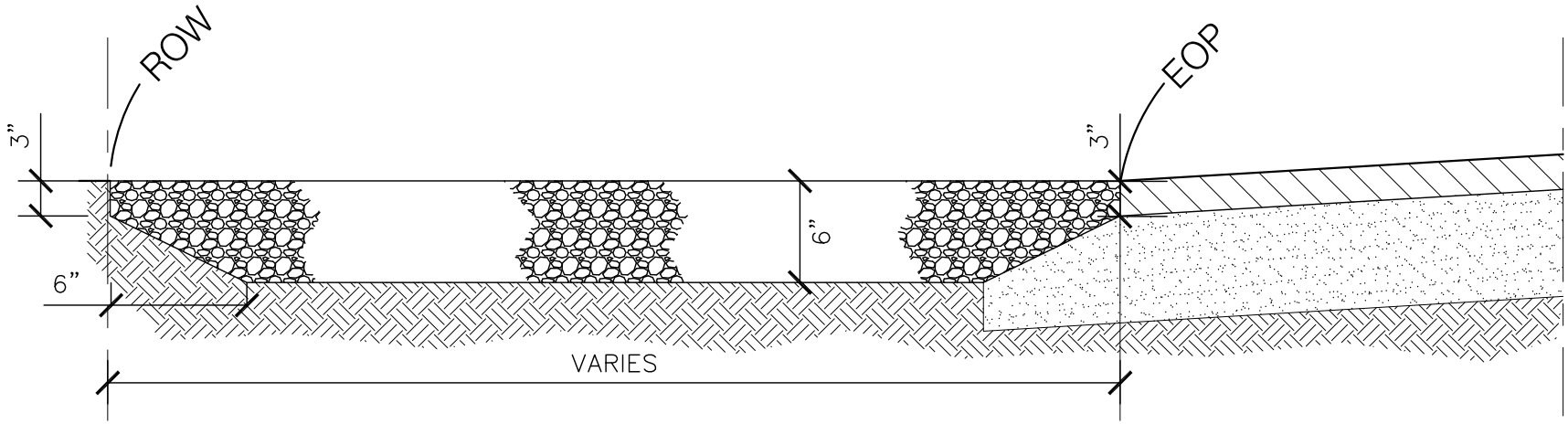

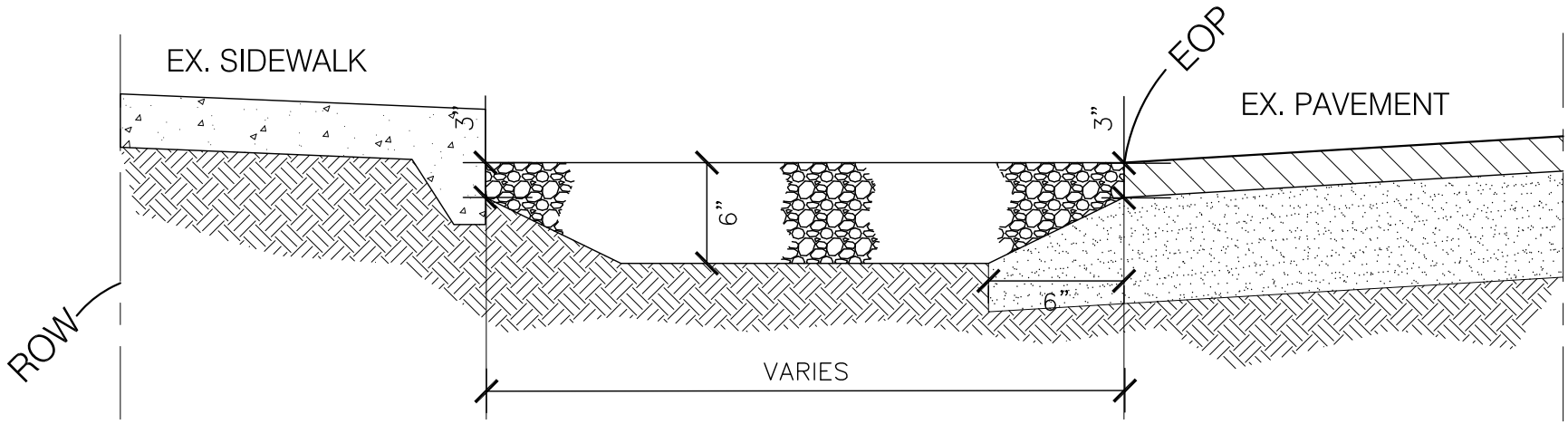

NOTES

1. GRADE EX. SWALE OR SHOULDER AS INDICATED.
2.. INSTALL WASHED #57 STONE; COMPACT W/ VIBRATORY COMPACTOR.

City of Key West Engineering Services 3132 Flagler Avenue, Key West, FL 33040	TITLE SWALE RESTORATION SECTIONS	DRAWN GJV SCALE NTS DATE Feb 2015 SHEET 1 of 1	