ADDENDUM NO. 2
TO THE CONTRACT DOCUMENTS
for the construction of the

Date: September 10, 2014
Project No.: 406518

PUMP STATION F IMPROVEMENTS

CITY OF KEY WEST
KEY WEST, FLORIDA

To All Planholders and/or Prospective Bidders:

The following changes, additions, and/or deletions are hereby made a part of the Contract Documents for the construction of the Pump Station F Improvements dated August 2014 as fully and completely as if the same were fully set forth therein:

CONTRACTOR'S QUESTIONS AND ANSWERS

6. **Question:** Are there going to be drains in check vault, back to wet well?

   Answer: No.

7. **Question:** While reinforcing the generator platform, where can we put the existing generator, to work with more space and comfort?

   Answer: See Specification 01 01 00, General Requirements, Part 5, Paragraph 5.01.E and included supplement at end of section for generator removal and preparation for long term storage.

8. **Question:** What does the asterisks (*) next to CP-1 and field instruments mean on Drawing I-2?

   Answer: See GENERAL NOTE 1 on Drawing G-7; sheet 5 of 30.

9. **Question:** Flow Meter Cable Length: Can you get an approximate distance from the engineer for the Doppler flow meter transducer cable for FE 1-2? It is the distance from the flow meter vault to the transmitter located on the platform (Refer to drawings E-2 note 18 for transmitter location). This is a manufacturer's armored cable that can't be spliced and it is very expensive. The spec calls for length "as required".

   Answer: The cable length will be based on the Contractor's routing of conduits and actual field location of the transmitter. Therefore, the Contractor needs to determine the length of the cable.

10. **Question:** I would like to visit the site and have someone open hatch covers so I could look inside wet well. Who do I contact?

    Answer: Contact: Sean Mc Coy; CH2M HILL; 305-432-9124.

PART 3 – SPECIFICATIONS

1. **TABLE OF CONTENTS**

   Section 40 27 00.01, DELETE "DS-Cement – Mortar Ductile Iron Pipe and Fittings" and REPLACE with "Ceramic Epoxy-Lined Ductile Iron Pipe and Fittings"

2. **SECTION 03 01 32, REPAIR OF VERTICAL AND OVERHEAD CONCRETE SURFACES**

   ADD this section in its entirety.

3. **SECTION 40 27 00.01, CERAMIC EPOXY-LINED DUCTILE IRON PIPE AND FITTINGS**

   ADD this section in its entirety.

4. **SECTION 40 27 00.01, DS – CEMENT-MOTAR DUCTILE IRON PIPE AND FITTINGS**

   DELETE this section in its entirety.

5. **SECTION 33 12 00, TEMPORARY WASTEWATER BYPASS PUMPING SYSTEM**

   Page 3, Paragraph 1.03.B, ADD the following sentences at the end of the paragraph:

   "A monitoring system can be utilized instead of an operator during non-work hours. The system will monitor as a minimum pumps run/stop, high level alarm and pump malfunction. The Contractor will respond to all alarms within 20 minutes. Failure of Contractor to respond within 20 minutes to any alarm during non-working hours will eliminate the option to monitor the bypass pumping remotely and require the Contractor to provide onsite operator."

Page 4, Paragraph 2.20.A, ADD the following sentence at the end of the paragraph:

"Contractor shall provide an emergency generator connection for the existing pumps upon disconnection of the generator and for the bypass pumps to provide power to operate the pumps should Keys Energy power be interrupted. An emergency generator will be provided by the City for use by the Contractor."

Page 4, Paragraph 2.02.C.2, ADD the following sentence at the end of the paragraph:

"Contractor to provide electrical wire to connect auxiliary contacts to existing RTU."

DRAWINGS

1. DRAWING SD-7: PROCESS MECHANICAL: STANDARD DETAILS: DELETE in its entirety and REPLACE with the attached Drawing SD-7.

2. DRAWING D-3: PROCESS MECHANICAL: PUMP STATION MODIFICATIONS: LOWER PLAN AND UPPER SECTION: DELETE in its entirety and REPLACE with the attached Drawing D-3.

All Bidders shall acknowledge receipt of Addendum No. 2 in the Bid Form. Bids submitted without this acknowledgement will be considered informal.

CH2M HILL

_____

Sean Mc Coy, P.E.

Appended hereto and part of Addendum No. 2:
Section 03 01 32, Repair of Vertical and Overhead Concrete Surfaces, attached.
Section 40 27 00.01, Ceramic Epoxy-Lined Ductile Iron Pipe and Fittings, attached.
Drawing SD-7; Process Mechanical; Standard Details, attached.
Drawing D-3; Process Mechanical; Pump Station Modifications; Lower Plan and Upper Section, attached.

END OF ADDENDUM

SECTION 03 01 32
REPAIR OF VERTICAL AND OVERHEAD CONCRETE SURFACES

PART 1 GENERAL

1.01 REFERENCES

A. The following is a list of standards which may be referenced in this section:

1. American Concrete Institute (ACI):
   a. 503R, Use of Epoxy Compounds with Concrete.
   b. 506R, Guide to Shotcrete.
2. ASTM International (ASTM):
   a. A82/A82M, Standard Specification for Steel Wire, Plain, for Concrete Reinforcement.
   b. A185/A185M, Standard Specification for Steel Welded Wire Reinforcement, Plain, for Concrete.
   c. C78, Standard Test Method for Flexural Strength of Concrete (Using Simple Beam with Third-Point Loading).
   d. C109/C109M, Standard Test Method for Compressive Strength of Hydraulic Cement Mortars (Using 2-in. or [50mm] Cube Specimen).
   e. C157/C157M, Standard Test Method for Length Change of Hardened Hydraulic-Cement, Mortar, and Concrete.
   f. C348, Standard Test Method for Flexural Strength of Hydraulic Cement Mortars.
   g. C496/C496M, Standard Test Method for Splitting Tensile Strength of Cylindrical Concrete Specimens.
   h. C596, Standard Test Method for Drying Shrinkage of Mortar Containing Hydraulic Cement.
   i. C666/C666M, Standard Test Method for Resistance of Concrete to Rapid Freezing and Thawing.
   j. C882, Standard Test Method for Bond Strength of Epoxy-Resin Systems Used with Concrete by Slant Shear.
   k. C1202, Standard Test Method for Electrical Indication of Concrete’s Ability to Resist Chloride Ion Penetration.
3. International Concrete Repair Institute (ICRI): 03730, Guide for Surface Preparation for the Repair of Deteriorated Concrete Resulting from Reinforcing Steel Corrosion.

1.02 DEFINITIONS

A. Low-Pressure Spray Mortar: Mortar applied by low-pressure spraying, or in small areas by hand troweling.

©COPYRIGHT 2014 CH2M HILL

B. Nonstructural Defects:

1. Areas with defects that meet the following:
   a. Deemed by Engineer to be superficial.
   b. Less than 1 inch in depth.
   c. Not subjected to structural loads or heavy wear.

C. Rebound: Shotcrete material, mostly aggregates, that bounce off a surface against which it is projected.

D. Shotcrete: Mortar pumped through a hose and projected at high velocity.

E. Structural Defects: Condition or characteristic that detracts from appearance, strength, or durability of concrete.

1. Structural defects may be in the following areas:
   a. Areas subject to structural loading.
   b. Areas subject to heavy wear.
   c. Interior of hydraulic structure.
   d. Below grade structure.
   e. Display defects or parts of defect that extend 1 inch or deeper into concrete and deemed by Engineer as structural defect.

1.03 SUBMITTALS

A. Action Submittals:

1. Product data sheets for each material supplied.
2. Samples: Mesh reinforcement and mesh anchor.

B. Informational Submittals:

1. Mortar System:
   a. Manufacturer’s installation bulletin.
   b. Manufacturer’s recommended fabric size for mesh reinforcement.
2. Mesh manufacturer’s installation instructions and allowable load criteria.
3. Written description of equipment proposed for hydrodemolition for surface preparation.
4. Certificates:
   a. Certificate of Compliance that proposed product system meets or exceeds specified performance criteria when tested in accordance with Article Field Quality Control.
   b. Mortar system Manufacturer’s Certificate of Proper Installation.
   c. Shotcrete Nozzleman: Current ACI Certification.

©COPYRIGHT 2010 CH2M HILL

5. Statements of Qualification:
   a. Shotcrete nozzleman.
   b. Mortar system manufacturer's representative.
   c. Mortar system applicator.
   d. Coating system applicator.
6. Mortar system manufacturer's proposed modified test procedures for ASTM C109/C109M and ASTM C882 test methods.

1.04 QUALITY ASSURANCE

A. Qualifications:

1. Mortar System Applicator:
   a. Experienced applicator endorsed by mortar system manufacturer.
   b. For low-pressure spray mortar system in lieu of endorsement, complete mortar system manufacturer's demonstration in accordance with Article Manufacturer's Services.
2. Mortar System Manufacturer's Representative: As specified in Section 01 43 33, Manufacturers' Field Services.
3. Shotcrete Nozzleman: ACI Certification in accordance with ACI 506R.

B. Mockups:

1. Mortar System Manufacturer's Demonstration:
   a. Schedule time for manufacturer's demonstration of repair system proposed for Project. Prepare mortar to specified consistency, for testing and placement. Initiate curing on portions of each type of surface to be repaired to include overhead and vertical applications.
   b. Prepare surface area in advance of demonstration and obtain manufacturer's acceptance of preparation for each type of application.
   c. Demonstrate:
      1) Mixing and application equipment capabilities and procedures, including the flow of material from nozzle or sprayer.
      2) Nozzle operator and person in charge of low-pressure sprayer, capabilities and ability to follow prescribed application procedures and properly operate equipment and apply surface repair materials.
   d. Make compression test samples during demonstration and deliver to an independent testing laboratory for testing at 7 days and 28 days. Take a core of the demonstration placement and test for tensile bond at 7 days.

©COPYRIGHT 2014 CH2M HILL

2. For each type of mortar system application demonstration, prepare area of at least 5 feet by 5 feet by the average thickness required for Project.

1.05 PREREPAIR CONFERENCE

A. Required Meeting Attendees:

1. Contractor.
2. Repair Subcontractor.
3. Technical representative for repair material manufacturer.
4. Engineer.

B. Schedule and conduct prior to incorporation of respective products into Project. Notify Engineer of location and time.

C. Agenda shall include:

1. Review of field conditions. Conduct field observations of Work to be performed.
2. Based on above observations, repair material manufacturer's technical representative shall make material selection and repair method recommendations.
3. Technical representative for repair material manufacturer shall review proposed surface preparation, material mixing, application, consolidation, finishing, curing, and protection of repair material from weather conditions.
4. Other specified requirements requiring coordination.

PART 2 PRODUCTS

2.01 SHOTCRETE MORTAR SYSTEM (STRUCTURAL)

A. Mortar Materials:

1. Blend of selected portland cements, microsilica, and specially graded aggregates and fibers applicable for vertical and overhead surfaces.
2. Materials shall not contain asbestos, chlorides, nitrates, added gypsum, added lime, or high aluminum cements.
3. Noncombustible before and after cure.
4. Furnish in a factory proportioned unit.
5. Workability from 1/4 inch in depth and greater.

B. Mixed Mortar Properties:

1. Working Time: 5 minutes to 10 minutes.
2. Finishing Time: 10 minutes to 20 minutes.

©COPYRIGHT 2010 CH2M HILL

3. Color: Dark gray.

C. Cured Mortar Properties:

1. Compressive strength for 2-inch cubes and in accordance with ASTM C109/C109M, or 3-inch cubes in accordance with manufacturer's modification to ASTM C109/C109M:
   a. 7 Days: 6,000 psi minimum.
   b. 28 Days: 7,000 psi minimum.
2. Flexural Strength (Modulus of Rupture) ASTM C78 at 28 Days: 1,100 psi minimum.
3. Tensile Strength, ASTM C496/C496M at 28 Days: 400 psi minimum.
4. Chloride Ion Penetrability Based on Charge Passed, ASTM C1202: 800 coulombs maximum.
5. Mortar shall not produce a vapor barrier.

D. Manufacturers and Products:

1. BASF Building Systems, Shakopee, MN; MBT P&R Shotpatch 21F.
2. Sika Corp., Lyndhurst, NJ; SIKACEM 103 with fibers added in accordance with manufacturer's recommendations.
3. Euclid Chemical Co., Cleveland, OH; Eucoshot with Tuf-Strand SF added per manufacturer's recommendations.

2.02 LOW-PRESSURE SPRAY MORTAR SYSTEM (STRUCTURAL)

A. Mortar:

1. One component, cement based, fiber reinforced, shrinkage compensated, gray in color, with a minimum 30-minute working time.
2. Cured materials mixed to a flow of 70 percent at five drops shall conform to the following criteria:
   a. Minimum Slant Shear Bond Strength: 3,000 psi in 28 days in accordance with ASTM C882 test method modified with no bonding agent.
   b. Minimum Compressive Strength: 6,000 psi at 28 days in accordance with ASTM C109/C109M.
   c. Minimum Tensile Bond Strength ACI 503R, Appendix A or ASTM C496/C496M: 300 psi in 28 days.
   d. Minimum Flexural Strength: 1,100 psi in 28 days in accordance with ASTM C348.
   e. Chloride Ion Penetrability Based on Charge Passed, ASTM C1202: 800 coulombs maximum.
   f. Drying Shrinkage at 28 Days: 0.1 percent maximum in accordance with ASTM C157 Modified.
   g. System shall not produce a vapor barrier.

©COPYRIGHT 2014 CH2M HILL

B. Sprayable, extremely low permeability, sulfate resistant, easy to use and requiring only the addition of water.

C. Free of chlorides and other chemicals causing corrosion.

D. Manufacturers and Products:

1. BASF Building Systems, Shakopee, MN; MBT P& R Emaco S88CI.
2. Sika Corp., Lyndhurst, NJ; SikaRepair 224.

2.03 POLYMER-MODIFIED REPAIR MORTAR (NONSTRUCTURAL)

A. Polymer-modified, cementitious based, chloride resistant, flowable, gray in color, working time of 20 minutes minimum, surface renovation mortar conforming to the following properties:

1. Minimum Slant Shear Bond Strength: 2,000 psi in 28 days in accordance in with ASTM C882 test method modified with no bonding agent.
2. Compressive Strength, ASTM C109/C109M at 28 Days: Minimum 7,000 psi.
3. Flexural Strength, ASTM C348 at 28 Days: Minimum 1,200 psi.
4. Chloride Ion Penetrability Based on Charge Passed, ASTM C1202: 800 coulombs maximum.
5. Splitting Tensile Strength, ASTM C496/C496M at 28 days: 500 psi minimum.
6. Drying Shrinkage, ASTM C596 at 28 Days: Maximum 0.12 percent.
7. Freeze Thaw Resistance, ASTM C666/C666M, at 300 Cycles: 90 percent RDF.

B. Manufacturers and Products:

1. BASF Building Systems, Shakopee, MN; MBT P&R Emaco R300 CI and R320 CI. Emaco R300 CI and R320 CI shall not be used in locations that will be continuously moist or wet.
2. Sika Corp., Lyndhurst, NJ; SikaTop 123 Plus.

2.04 SPRAY APPLIED CONCRETE COATING

A. Apply a 60 mil coating in areas shown on Drawings.

Manufacturer and Product: Sauereisen, Pittsburgh, PA; Sewergard- Spray Applied No. 210S.

©COPYRIGHT 2010 CH2M HILL

2.05 BONDING AGENT

A. Epoxy resin concrete cement adhesive, specifically formulated for bonding plastic portland cement concrete or mortar to hardened portland cement concrete.

1. Mixed Bonding Agent Properties:
   a. Pot Life: 75 minutes to 105 minutes.
   b. Contact Time: 24 hours.
   c. Concrete Color: Gray.
2. Cured Epoxy Resin Portland Cement Adhesive Properties:
   a. Splitting Tensile Strength, ASTM C496/C496M at 28 Days: 500 psi minimum.
   b. Flexural Strength, ASTM C348: 1,000 psi minimum.
   c. Bond Strength, ASTM C882 at 14 Days:
      1) 0 Hour Open Time: 2,500 psi minimum.
      2) 24 Hours Open Time: 2,000 psi minimum.
   d. Bonding agent shall not produce a vapor barrier.
   e. Compatible with mortar system.

B. Manufacturers and Products:

1. BASF Building Systems, Shakopee, MN; MBT P&R Emaco P24.
2. Sika Corp., Lyndhurst, NJ; Sika Armatec 110.

2.06 WATER

A. Clean and free from oil, acid, alkali, organic matter, or other deleterious substances, meeting federal drinking water standards.

2.07 ACCESSORIES

A. Mesh Reinforcement: Welded wire fabric with spacing of wires, and wire size in accordance with ASTM A185/A185M, ASTM A82/A82M, and mortar system manufacturer's recommendations.

B. Tie Wire: 16 gauge, galvanized.

C. Mesh Anchors:

1. Manufacturers and Products:
   a. Powers Fastening, Inc.; Tie Wire Version of Power-Stud.
   b. Hilti Fastener Systems; Kwik Bolt II HHDCA.
   c. UCAN Fastening Products; UCAN Tie Wire Wedge Anchor.

©COPYRIGHT 2014 CH2M HILL

D. Finishing Aid:

1. Manufacturers and Products:
   a. BASF Building Systems, Shakopee, MN; MBT P&R Confilm.
   b. Euclid Chemical Co., Cleveland, OH; Eucobar.
   c. Sika Corp., Lyndhurst, NJ; Sikafilm.

E. Flexible Cementitious Reinforcing Bar Coating:

1. Manufacturers and Products:
   a. Sika Corp., Lyndhurst, NJ; Armatec 110.

PART 3 EXECUTION

3.01 GENERAL

A. Concrete surface repair system may either be shotcrete mortar or low-pressure spray mortar for structural repairs, and hand or low-pressure spray applied polymer-modified mortar for nonstructural surface applications.

3.02 PREPARATION

A. Identify unsound and deteriorated concrete by sounding techniques and review proposed extent of repair with Engineer.

B. Remove unsound, honeycombed, deteriorated or otherwise defective concrete from work areas by high-pressure water blasting machine capable of removing concrete surfaces to a minimum amplitude roughness of 3/16 inch or as shown on Drawings. Where final surface is required to be flush with existing surface remove existing concrete depth as required for application of minimum thickness of mortar.

C. To avoid tapered shoulders square edges of patch areas by sawing or chipping.

D. Collect and dispose of water from removal operations in manner and location acceptable to Owner.

E. Do not use power-driven jackhammers and chipping hammers, unless water blasting is not practical or may cause other damage.

F. Where reinforcing steel is corroded, remove concrete minimum of 1-inch clear around reinforcing bar for application and bonding of new mortar to entire surface of exposed reinforcing steel if the following surface conditions exist:

1. 50 percent or more of reinforcing bar surface is exposed during removal of concrete.

©COPYRIGHT 2010 CH2M HILL

2. 25 percent or more of reinforcing steel surface is exposed during removal of concrete and extent of reinforcing bar corrosion is such that more than 25 percent of material is lost.
3. Bond between existing concrete and reinforcement has deteriorated as determined by Engineer.

G. Clean exposed reinforcing steel of rust and concrete per recommendations of repair material manufacturer and in accordance with recommendations ICRI 03730. Coat exposed reinforcing steel with flexible cementitious reinforcing bar coating.

H. Remove slurry from prepared areas before new mortar is applied.

I. Clean surface of laitance and contamination. Continuously soak and maintain in a wet condition the area to be patched and an area at least 6 inches beyond for at least 24 hours to prevent absorption of water from patching mortar. Provide saturated surface dry (SSD) condition for existing concrete at time of application of mortar.

3.03 MESH REINFORCEMENT INSTALLATION

A. Provide reinforcement when existing reinforcement is not exposed, and when mortar application is more than 3 inches deep, unless otherwise shown on Drawings.

B. Install mesh anchors in accordance with mesh manufacturer’s instructions.

C. Fasten reinforcement to mesh anchors with tie wire.

D. Lap reinforcement a minimum of one mesh spacing and secure with tie wire at intervals no less than 12 inches.

3.04 SHOTCRETE MORTAR APPLICATION

A. Apply mortar in accordance with manufacturer’s instructions.

B. Do not reuse rebound materials.

C. Apply mortar utilizing dry mix process.

D. Mortar shall emerge from nozzle in a steady, uninterrupted flow. If flow becomes intermittent, direct flow away from Work until flow of mortar becomes constant.

E. Minimum thickness of applied mortar 1-1/2 inches or 2 inches of cover over existing reinforcement which ever results in a thicker coat.

©COPYRIGHT 2014 CH2M HILL

F. Slice off excess material with a wire screed approximately 5 minutes to 10 minutes after initial set.

G. Apply finish to exposed mortar surfaces to match existing surfaces and in accordance with manufacturer's instructions. Steel trowel finish when finish coat is not applied. Apply full strength finishing aid.

H. Rebound Removal: Continuously throughout mortar application, remove rebound, sand, and miscellaneous debris.

I. Nozzle Position: Hold nozzle approximately at right angles to and at a distance from surface in accordance with mortar system manufacturer's instructions for type of application, nozzle, and air pressure used.

J. Reinforcing Steel Encasement: Modify procedure of shooting mortar to better direct material around reinforcement bars. Prevent mortar from building up on reinforcement steel when shooting on, around, through, and behind steel to eliminate voids. Provide dense void-free encasement of reinforcement steel.

K. Shotcreting More than One Layer: In accordance with mortar system manufacturer's instructions.

3.05 LOW-PRESSURE SPRAY MORTAR APPLICATION

A. Mix mortar in mortar-concrete mixer attached to pump-spray equipment for spray application. Mix with a slow speed drill and jiffler type paddle or small mortar type mixer for hand trowel application.

B. After priming substrate per manufacturer's recommendations, apply mortar by low pressure spraying equipment unless noted otherwise.

C. Bonding Agent:

1. Use bonding agent for hand applied areas.
2. Application of repair mortar over the bonding agent shall be completed within time frame recommended by bonding agent manufacturer.
3. Consult with manufacturer for optimum and minimum acceptable degrees of surface tackiness of coat.

D. Work mortar firmly and quickly into repair area.

E. Finish mortar with hand float application to smooth even surface matching adjacent concrete. Provide finishing aid at full strength.

©COPYRIGHT 2010 CH2M HILL

3.06 POLYMER-MODIFIED REPAIR MORTAR APPLICATION (NONSTRUCTURAL)

A. Mix mortar in mortar-concrete mixer attached to pump-spray equipment for spray application. Mix with a slow speed drill and jiffler type paddle or small mortar type mixer for hand trowel application.

B. Hand Troweling: Apply bond coat of the repair mortar to the SSD prepared substrate before application of mortar. Do not apply more of the bond coat than can be covered with mortar before the bond coat dries. Do not retemper this bond coat.

C. Place mortar by hand or low-pressure spray and trowel to specified surface finish.

3.07 SPRAY APPLIED CONCRETE COATING

A. Prepare substrate in accordance with manufacturer's instructions.

B. Apply in single coat of 60 mils. Application should be done with a 50 percent overlap in a 'cross hatch' pattern.

C. Utilize a holiday detector to ensure a pin hole free coating.

D. Use Sauereisen SewerGard Patch Kit for repair of pin holes.

3.08 CURING

A. Prior to curing, apply water fog to mortar system in accordance with mortar system manufacturer's instructions.

B. Commence water curing after mortar system application and when curing will not cause erosion of mortar.

C. Continuously cure mortar system for a period of 7 days.

D. Do not membrane cure, unless method is part of mortar system manufacturer's instructions and approval is obtained from Engineer.

E. Cure intermediate layers of mortar in accordance with manufacturer's instructions.

©COPYRIGHT 2014 CH2M HILL

3.09 FIELD QUALITY CONTROL

A. Testing laboratory will be retained by Owner and will test the following per "modified" ASTM C109/C109M and ASTM C882.

1. Production Samples of mixed materials during construction for compliance with the Specifications. A minimum of three Samples will be tested for mortar repair.
2. Core two 2-1/2- or 3-inch-diameter Samples from the completed repair Work.
   a. Cut cores through cured mortar repair and into base concrete to total depth equal to at least 2.5 times the repair mortar thickness.
   b. Sawcut cores after removal to trim base concrete thickness to same thickness as mortar so bond line is at center of prepared Sample.
   c. Bond Samples to steel plates at each end using epoxy bonding agent.
   d. Perform tension testing using calibrated independent test laboratory equipment and eyebolts or threaded connectors tapped and threaded into the base plate so that the tension load is concentric with the center of the core Sample.
   e. Bond line shall sustain minimum of 300 psi in direct tension without failure or movement.

B. Repair and fill holes using same repair mortar where core Samples have been removed.

C. Remove and replace unacceptable Work.

3.10 MANUFACTURER'S SERVICES

A. Provide mortar system manufacturer's representative at Site in accordance with Section 01 43 33, Manufacturers' Field Services, for installation assistance, inspection and Certification of Proper Installation, and training of mortar system applicators.

3.11 PROTECTION

A. Protect adjacent surfaces, and equipment, from being damaged by overshooting shotcrete mortar or low-pressure spray mortar.

©COPYRIGHT 2010 CH2M HILL

3.12 CLEANING

A. Remove overshot mortar and rebound materials as Work proceeds. Remove from Work waste materials, unsound material from concrete surfaces, material chipped from walls, and water used in preparation of application and finishing.

END OF SECTION

©COPYRIGHT 2014 CH2M HILL

SECTION 40 27 00.01 CERAMIC-LINED DUCTILE IRON PIPE AND FITTINGS	
Item	**Description**
General	Materials in contact with potable water shall conform to NSF 61 acceptance. Pipe manufacturer shall submit certification that source manufacturing facility has been producing ductile iron pipe of the specified diameters, dimensions, and standards for a period of not less than 10 years. Testing of pipe required by AWWA A21.51 shall be conducted in testing and laboratory facilities located in the USA and operating under USA laws and regulations. Pipe shall be handled during manufacture and shipped without nesting (without insertion of one pipe inside another).
Pipe	Buried Liquid Service Using Proprietary Restrained Joints: AWWA C111/A21.11, and AWWA C151/A21.51, pressure class conforming to Table 5 and Table 7 for Type 4 trench, 250 psi minimum working pressure. Follower glands shall be ductile iron. Exposed Pipe Using Grooved End and Flange Joints: AWWA C115/A21.15, thickness Class 53 minimum, 250 psi minimum working pressure.
Lining	Ceramic-epoxy: Pipe and fittings to be ceramic epoxy lined shall not have been previously lined. Surface preparation shall be made to surfaces free of grease, oil, or other substance with abrasive blasting using clean sand or grit abrasive. Lining shall be done within 8 hours of surface preparation and surfaces shall be reblasted if rusting appears before lining. Line with a total dry film thickness of 40-mils of ceramic epoxy. Ceramic epoxy shall be amine-cured Novolac epoxy with 20 percent minimum volume ceramic quartz pigment, Protecto 401 by Induron Coating, or equal. Lining shall be applied above 40 degrees F ambient temperature and shall not be applied to flange faces. Lining thickness shall be tested using a magnetic film thickness gauge. Lining integrity shall be tested on surfaces with a nondestructive, 2,500-volt dielectric resistance test.

©COPYRIGHT 2014 CH2M HILL

SECTION 40 27 00.01 CERAMIC-LINED DUCTILE IRON PIPE AND FITTINGS	
Item	**Description**
Fittings	Lined and coated same as pipe. Proprietary Restrained: AWWA C110/A21.10, AWWA C111/A21.11, and AWWA C153/A21.53, ductile iron, 250 psi minimum working pressure. Restraint shall be achieved with removable metal elements fitted between a welded bar on the pipe barrel and the inside of the joint bell or fitting sizes smaller than 16 inches may be mechanical joint, restrained by anchor gland followers, ductile iron anchor type, wedge action, with break-off tightening bolts. Assembled joints shall be rated for deflection in operation at rated pressure. Rated deflection shall be not less than 1-1/2 degrees for 36 inch and smaller pipe. Rated deflection shall be not less than 1/2 degree for 42-inch and larger pipe. Clow Corp., American Cast Iron Pipe Co., U.S. Pipe. Restrained joints relying on metal teeth molded into the gasket to prevent joint separation under pressure will not be accepted. Grooved End: AWWA C606 and AWWA C110/A21.10, ductile iron, 250 psi minimum working pressure; Victaulic. Flange: AWWA C110/A21.10 ductile iron, faced and drilled, Class 125 flat face. Gray cast iron will not be allowed.
Joints	Proprietary Restrained: 150 psi minimum working pressure. Clow Corp., Super-Lock; American Cast Iron Pipe Co., Flex-Ring or Lok-Ring; U.S. Pipe, TR Flex. Flange: Class 125 flat face, ductile iron, threaded conforming to AWWA C115/A21.15. Gray cast iron will not be allowed. Branch connections 3 inches and smaller, shall be made with service saddles as specified in Section 40 27 01, Process Piping Specialties.
Bolting	Mechanical, Proprietary Restrained, and Grooved End Joints: Manufacturer's standard. Class 125 Flat-Faced Flange: ASTM A307, Grade A carbon steel hex head bolts, ASTM A563, Grade A carbon steel hex head nuts and ASTM F436/F436M hardened steel washers at nuts and bolt heads. Achieve 40 percent to 60 percent of bolt minimum yield stress. Flanged Joints in Sumps, Wet Wells, and Submerged and Wetted Installations: Type 316 stainless steel, ASTM A320/A320M, Grade B8M hex head bolts; ASTM A194/A194M, Grade 8M hex nuts and ASTM F436/F436M Type 3 alloy washers at nuts and bolt heads. Achieve 40 percent to 60 percent of bolt minimum yield stress.

©COPYRIGHT 2014 CH2M HILL

SECTION 40 27 00.01 CERAMIC-LINED DUCTILE IRON PIPE AND FITTINGS	
Item	**Description**
Gaskets	General: Gaskets in contact with potable water shall be NSF 61 certified. Proprietary Restrained Joints; Water and Sewage Service: Rubber conforming to AWWA C111/A21.11. Grooved End Joints: Halogenated butyl conforming to ASTM D2000 and AWWA C606. Flanged, Water, and Sewage Services: 1/8-inch thick, homogeneous black rubber (EPDM), hardness 60 (Shore A), rated to 275 degrees F, conforming to ASME B16.21 and ASTM D2000 4CA 415 A25 B35 C32 EA14 F19. Full face for Class 125 flat-faced flanges, flat-ring type for Class 250 raised-face flanges. Blind flanges shall be gasketed covering entire inside face with gasket cemented to blind flange. Gasket pressure rating to equal or exceed the system hydrostatic test pressure.
Joint Lubricant	Manufacturer's standard.

END OF SECTION

©COPYRIGHT 2014 CH2M HILL

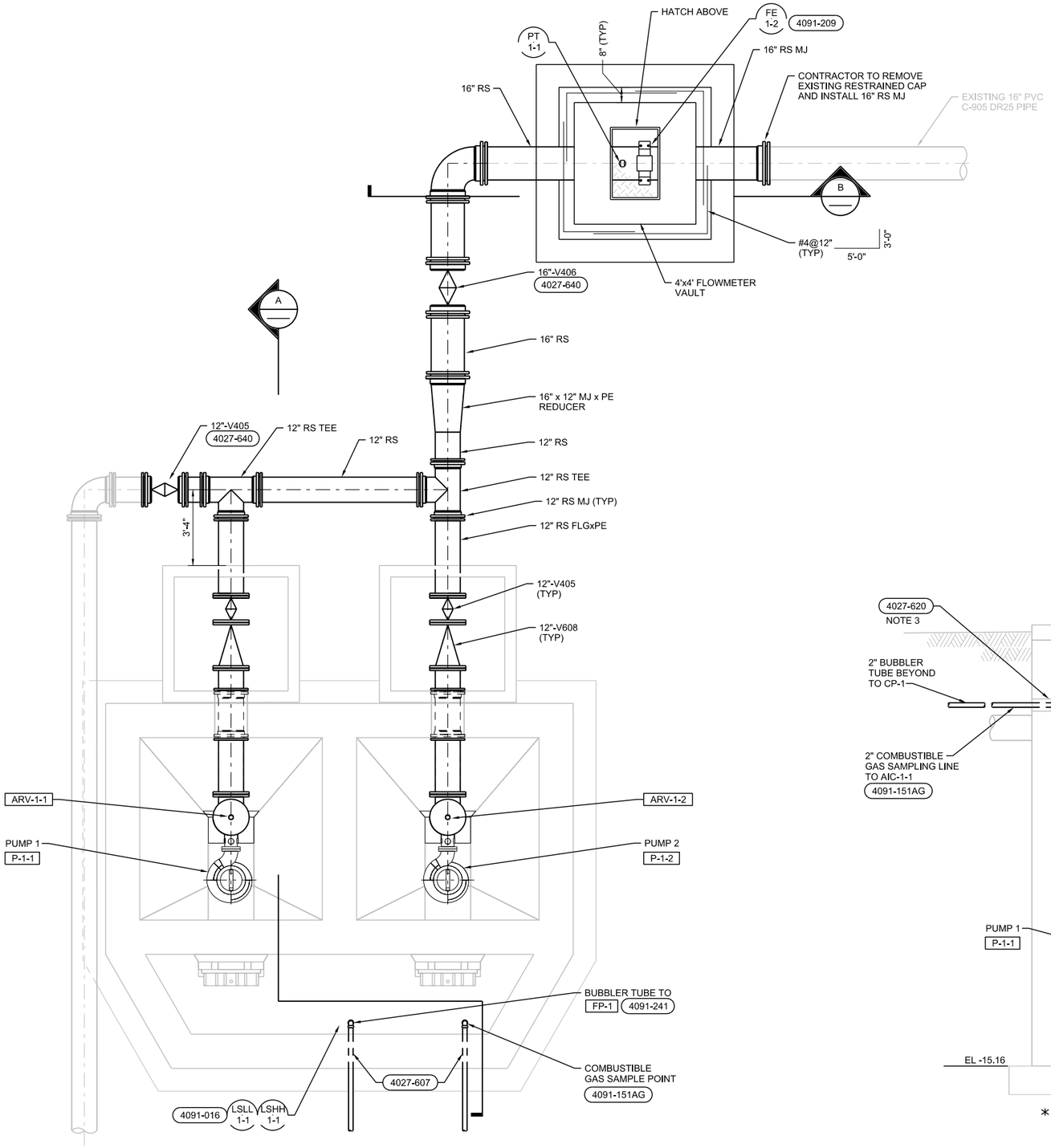

LOWER PLAN

3/8"=1'-0"

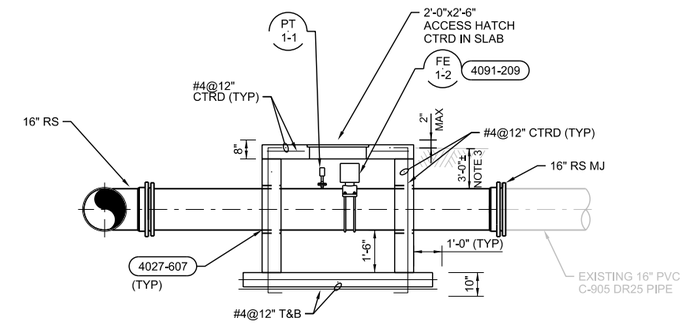

B SECTION

NTS

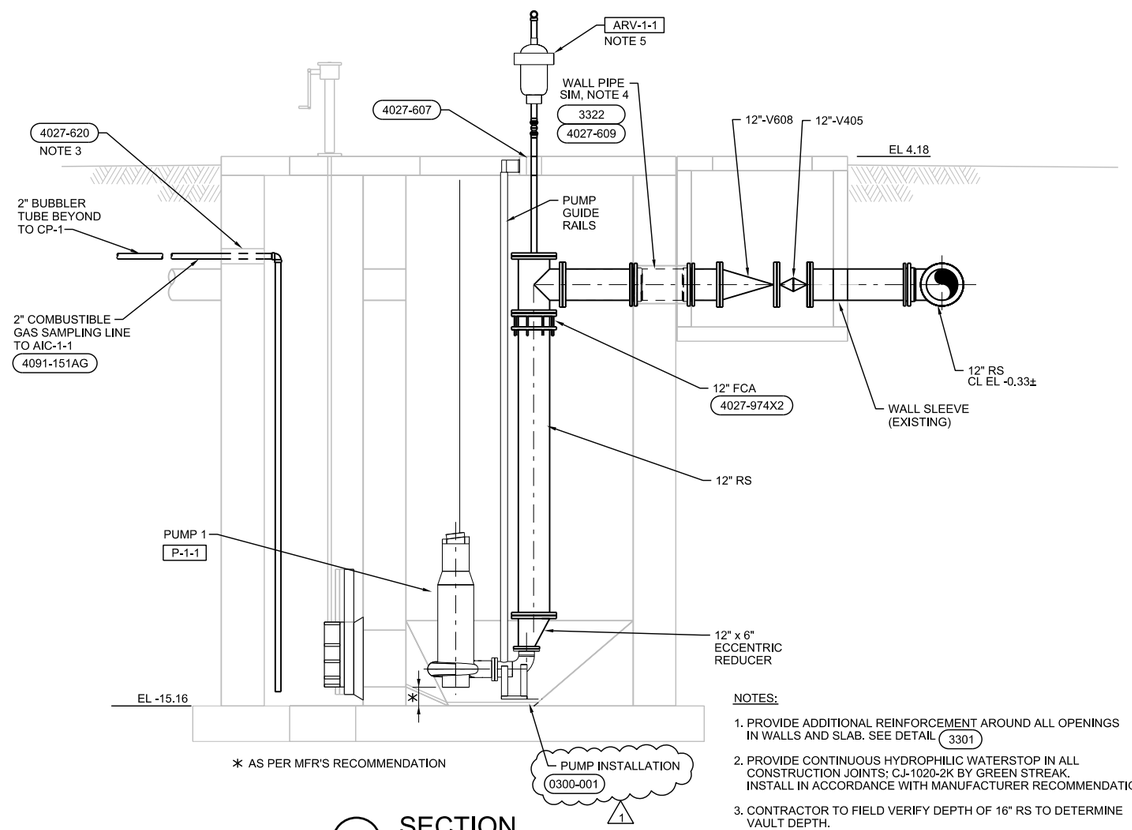

✱ AS PER MFR'S RECOMMENDATION

A SECTION

3/8"=1'-0"

NOTES:

1. PROVIDE ADDITIONAL REINFORCEMENT AROUND ALL OPENINGS IN WALLS AND SLAB. SEE DETAIL 3301
2. PROVIDE CONTINUOUS HYDROPHILIC WATERSTOP IN ALL CONSTRUCTION JOINTS; CJ-1020-2K BY GREEN STREAK. INSTALL IN ACCORDANCE WITH MANUFACTURER RECOMMENDATIONS.
3. CONTRACTOR TO FIELD VERIFY DEPTH OF 16" RS TO DETERMINE VAULT DEPTH.
4. DETAIL 3322 IS FOR CONCRETE WORK FOR THE PENETRATION THROUGH THE EXISTING WALL.
5. ROUTE ARV DISCHARGE BACK INTO WET WELL.

1	9/9/14	ADDENDUM NO. 2	AB	DG	O OKPECHI	J MAU	O OKPECHI
DSGN	DR	CHK	APVD				
O OKPECHI	S PASTEUR	J MAU	O OKPECHI				

3011 S.W. WILLISTON ROAD
GAINESVILLE, FLORIDA 32608
EB0000072 AAC001992
Immaculata Ogechi Okpechi PE 61794

PUMP STATION F

CITY OF KEY WEST
KEY WEST, FLORIDA

CH2MHILL

PROCESS MECHANICAL

PUMP STATION MODIFICAITONS LOWER PLAN AND SECTION

3/8" = 1'-0"

VERIFY SCALE

BAR IS ONE INCH ON ORIGINAL DRAWING, 0 1"

DATE	AUGUST 2014
PROJ	406518
DWG	D-3
SHEET	14 of 30

BID DOCUMENTS

REUSE OF DOCUMENTS: THIS DOCUMENT, AND THE IDEAS AND DESIGNS INCORPORATED HEREIN, AS AN INSTRUMENT OF PROFESSIONAL SERVICE, IS THE PROPERTY OF CH2M HILL AND IS NOT TO BE USED, IN WHOLE OR IN PART, FOR ANY OTHER PROJECT WITHOUT THE WRITTEN AUTHORIZATION OF CH2MHILL.

©CH2M HILL 2014. ALL RIGHTS RESERVED.

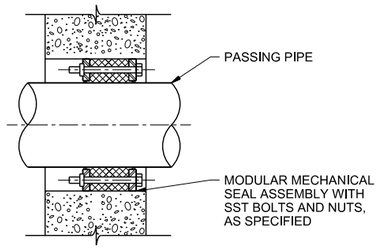

WALL PIPE PENETRATION SEAL

NTS

4027-607

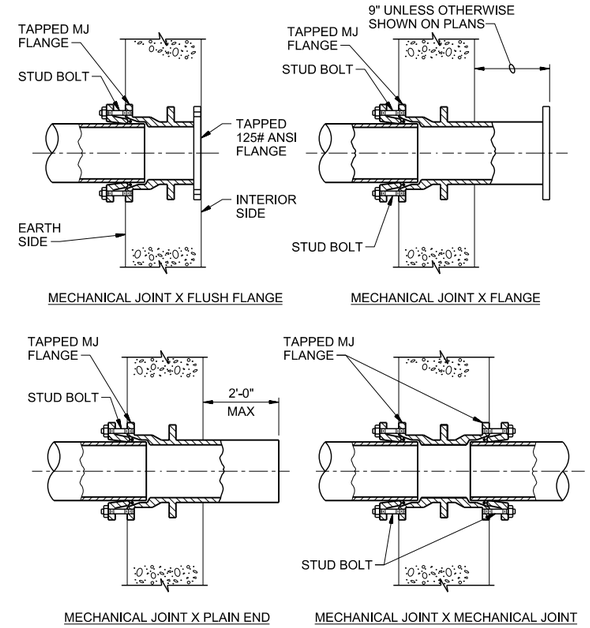

DUCTILE IRON WALL PIPES

NTS

4027-609

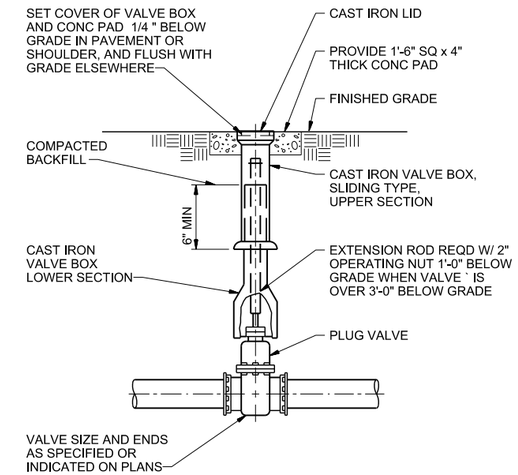

BURIED PLUG VALVE BOX

NTS

4027-640

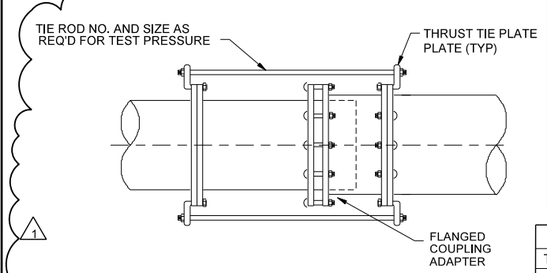

PIPE SIZE	X	T @ TEST PRESS <150 PSI	T @ TEST 150< PRESS <375 PSI
6"	2 3/4 "	5/8 "	5/8 "
8"	2 3/4 "	5/8 "	3/4 "
10"	2 3/4 "	5/8 "	1"
12"	3"	3/4 "	1"
14	3 1/4 "	3/4 "	1"
16"	3 1/4 "	1"	1"
18"	3 1/2 "	1"	1"
20"	3 3/4 "	1"	1 1/2 "
22"	4"	1"	1 3/4 "
24"	4 1/4 "	1 1/4 "	1 3/4 "

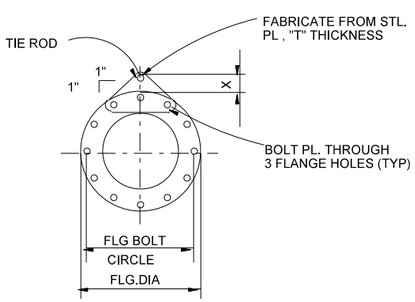

TIE ROD SCHEDULE													
TEST PRESSURE		25 PSI		50 PSI		100 PSI		150 PSI		225 PSI		375 PSI	
PIPE DIAM. (IN.)	MINIMUM PIPE WALL THICKNESS (IN.)	TIE RODS		TIE RODS		TIE RODS		TIE RODS		TIE RODS		TIE RODS	
		DIA. (IN.)	NO. REQD	DIA. (IN.)	NO. REQD	DIA. (IN.)	NO. REQD	DIA. (IN.)	NO. REQD	DIA. (IN.)	NO. REQD	DIA. (IN.)	NO. REQD
6	3/16	–	–	–	–	5/8	2	5/8	2	5/8	2	5/8	2
8	3/16	–	–	–	–	5/8	2	5/8	2	5/8	2	3/4	2
10	3/16	–	–	–	–	5/8	2	5/8	2	5/8	2	7/8	2
12	3/16	5/8	2	5/8	2	5/8	2	5/8	2	5/8	2	7/8	4
14	3/16	5/8	2	5/8	2	3/4	2	3/4	2	3/4	4	1	4
16	3/16	5/8	2	5/8	2	3/4	2	7/8	2	7/8	4	1	4
18	1/4	5/8	2	5/8	2	7/8	2	1	2	1	4	1-1/4	4
20	1/4	5/8	2	3/4	2	7/8	2	7/8	4	7/8	4	1-1/4	4
22	1/4	5/8	2	3/4	2	3/4	4	7/8	4	7/8	4	1-1/2	4
24	1/4	5/8	2	3/4	2	7/8	4	1	4	1	6	1-1/2	6

NOTES:

1. TIE RODS SHALL CONFORM TO ASTM A193 GRADE B7.
2. NUTS SHALL CONFORM TO ASTM A194 GRADE 2H.
3. PLATE SHALL CONFORM TO ASTM A283 GRADE D.
4. TIE ROD NUTS SHALL BE TIGHTENED GRADUALLY AND EQUALLY IN STAGES TO PREVENT UNEVEN ALIGNMENT AND TO ALLOW EQUAL STRESS ON ALL TIE RODS UNDER PRESSURE. TIGHTEN UNTIL SNUG. THREADS SHALL PROTRUDE FROM NUTS. PEEN THREADS AFTER TIGHTENING NUTS.
5. CONTRACTOR SHALL USE DATA FOR ONLY THOSE PIPE SIZES AND TEST PRESSURES SPECIFIED IN THIS CONTRACT.

RESTRAINED FLANGED COUPLING ADAPTER

NTS

4027-974X2

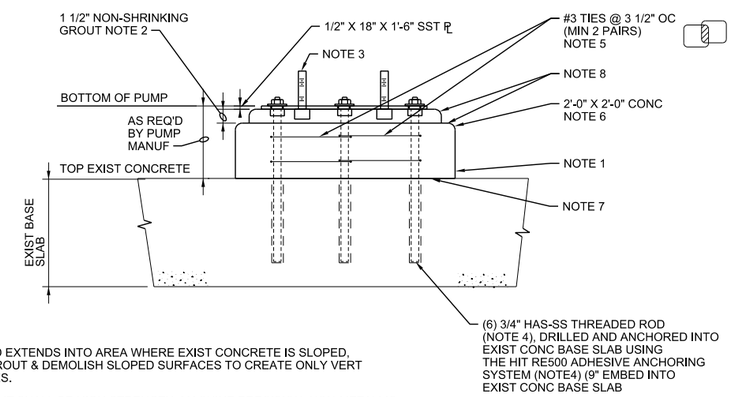

NOTES:

1. IF NEW EQUIP PAD EXTENDS INTO AREA WHERE EXIST CONCRETE IS SLOPED, REMOVE EXIST GROUT & DEMOLISH SLOPED SURFACES TO CREATE ONLY VERT & HORIZ SURFACES.
2. NON-SHRINK GROUT SHALL BE HIGH STRENGTH, MACHINE PRECISION, NON-METALLIC.
3. CONTRACTOR TO COORDINATE QUANTITY, SIZE, AND LAYOUT OF BOLTS FOR FASTENING PUMP ASSEMBLY TO PLATE. PROVIDE HOLES IN PLATE FOR THESE BOLTS AND TACK WELD HEAD OF BOLTS TO UNDERSIDE OF PLATE.
4. BY HILTI INC.
5. TIES SHALL BE STAINLESS STEEL REINFORCING STEEL, OR USE ASTM A615 REINFORCING AND COAT CONTACT SURFACES BETWEEN REINF STEEL AND ANCHORS WITH SYSTEM 27 IN SECTION 09902 OF SPECIFICATIONS.
6. CONCRETE: 7 DAY STRENGTH f'c = 4, 5 RH, W/CM = 0.45 MAX,, TYPE V CEMENT ASTM C: 50 TABLES 1 & 2 AND SULFATE EXPANSION REQUIREMENTS OF TABLE 4.
7. REMOVE DELETRIOUS MATERIAL AND EXIST SURFACE UNTIL EXIST CONCRETE HAS pH OF 9.0 MIN. ROUGHEN SURFACE TO 3/8" MINIMUM AMPLITUDE.
8. COAT WITH AN EPOXY COATING SUCH AS SIKADUR-SERIES, 84 SIKA CORP.

PUMP INSTALLATION

NTS

0330-001

DSGN	DR	CHK	APVD	J MAU	
O OKPECHI	O OKPECHI	S PASTEUR			

1	9-9-14	ADDENDUM NO. 2

3011 S.W. WILLISTON ROAD
GAINESVILLE, FLORIDA 32608
EB0000072 AAC001992
Immaculata Ogechi Okpechi PE 61794

PUMP STATION F

CITY OF KEY WEST
KEY WEST, FLORIDA

CH2MHILL

PROCESS MECHANICAL

STANDARD DETAILS

1" = X'

VERIFY SCALE

BAR IS ONE INCH ON ORIGINAL DRAWING.
0 1"

DATE	AUGUST 2014
PROJ	406518
DWG	SD-7
SHEET	28 of 30

BID DOCUMENTS

REUSE OF DOCUMENTS: THIS DOCUMENT, AND THE IDEAS AND DESIGNS INCORPORATED HEREIN, AS AN INSTRUMENT OF PROFESSIONAL SERVICE, IS THE PROPERTY OF CH2M HILL AND IS NOT TO BE USED, IN WHOLE OR IN PART, FOR ANY OTHER PROJECT WITHOUT THE WRITTEN AUTHORIZATION OF CH2MHILL.
©CH2M HILL 2014. ALL RIGHTS RESERVED.