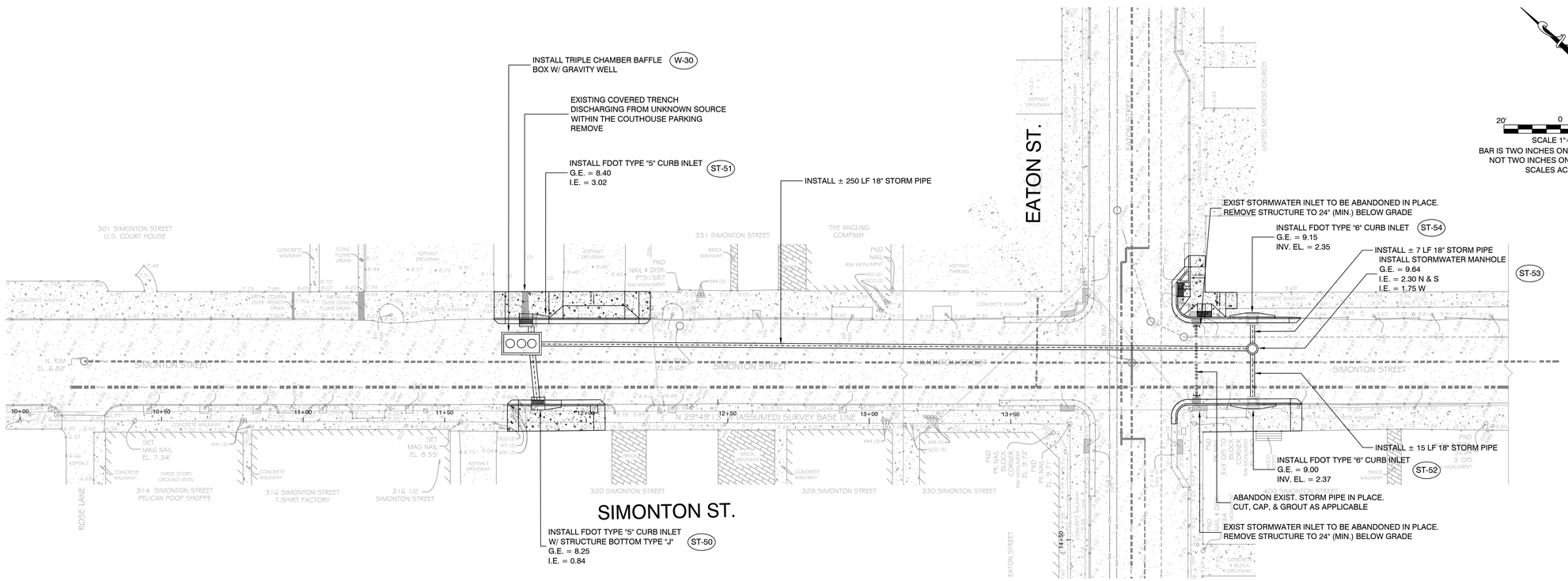

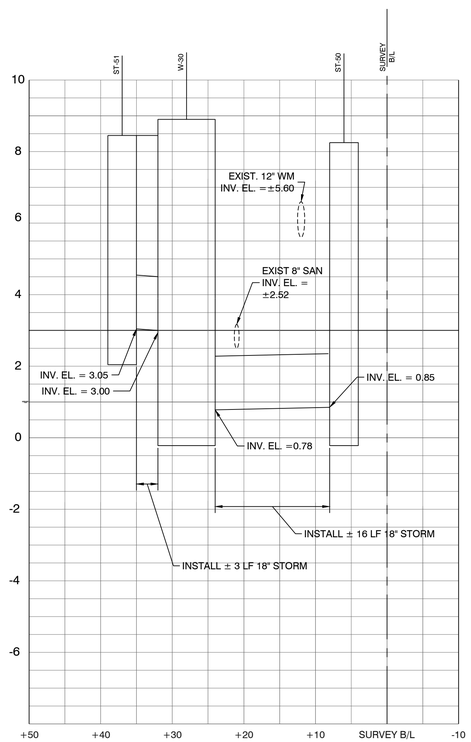

PROFILE SCALE:
SCALE HORIZONTAL: 1"=10'
SCALE VERTICAL: 1"=2'

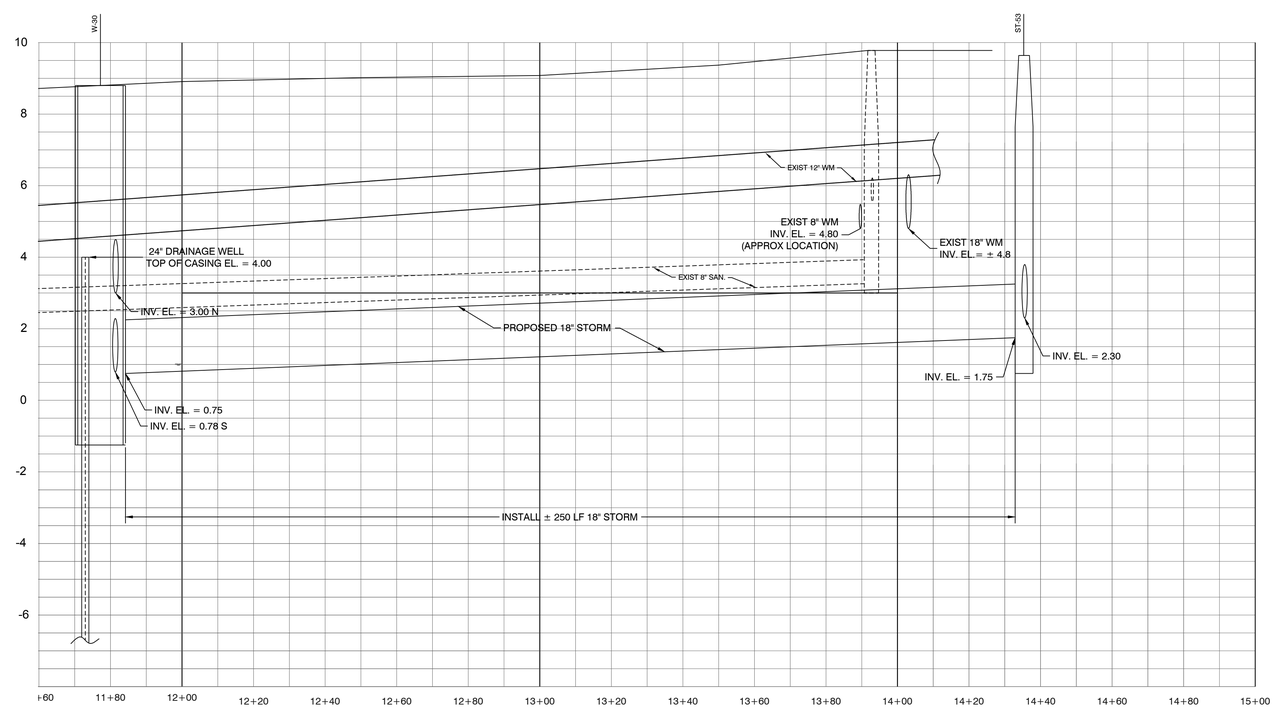

GENERAL NOTES:

1. LIMITS OF RECONSTRUCTION OF SIDEWALK, WITH THE CITY OF KEY WEST ROW, IS APPROXIMATE. ALL WORK SHALL TERMINATE AT THE NEAREST CONTROL JOINT.

PROFILE SCALE:
SCALE HORIZONTAL: 1"=10'
SCALE VERTICAL: 1"=2'

CIVIL ENGINEERING • REGULATORY PERMITTING • CONSTRUCTION MANAGEMENT
KEY WEST OFFICE
1010 EAST KENNEDY DRIVE, SUITE 400
KEY WEST, FLORIDA 33040
TEL: (305) 293-9440 FAX: (305) 296-0243
TAMPA OFFICE
CONCOURSE CENTER
3507 EAST FRONTAGE ROAD, SUITE 140
TAMPA, FLORIDA 33607
TEL: (813) 579-1616 FAX: (813) 289-0710
PEREZ ENGINEERING & DEVELOPMENT, INC
CERTIFICATE OF AUTHORIZATION No. 8579
ALLEN E. PEREZ, P.E.
Florida P.E. NO. 51468
December 14, 2012

ORIGINAL: SEPTEMBER 2012
REVISIONS: 1 2 3 4 5 6

EAST FRONT ST. FLOOD MITIGATION PROJECT

SIMONTON STREET
PLAN & PROFILE

CITY OF KEY WEST
3121 FLAGLER AVE.
KEY WEST, FL 33040

JOB NO. 121001
DRAWN RTM
DESIGNED AEP
CHECKED AEP
QC
SHEET C-9

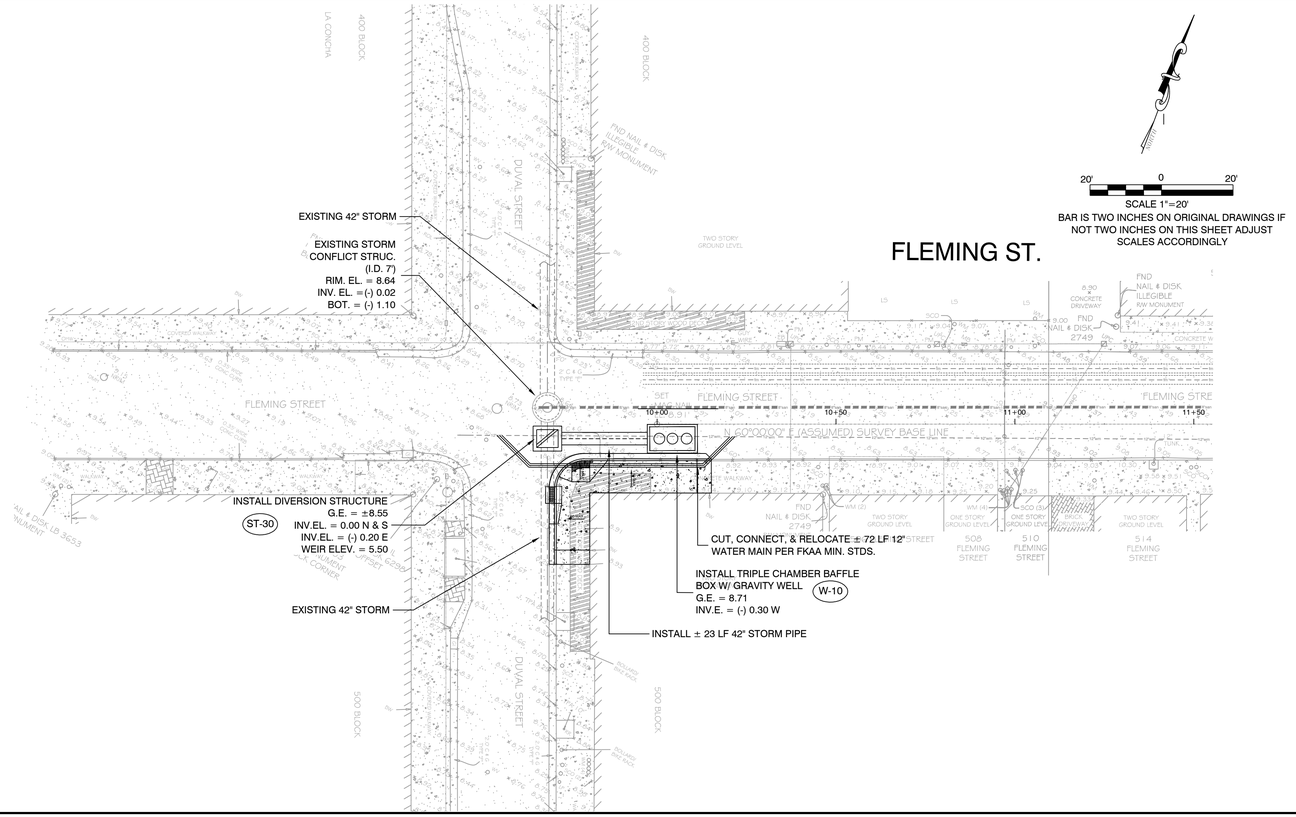

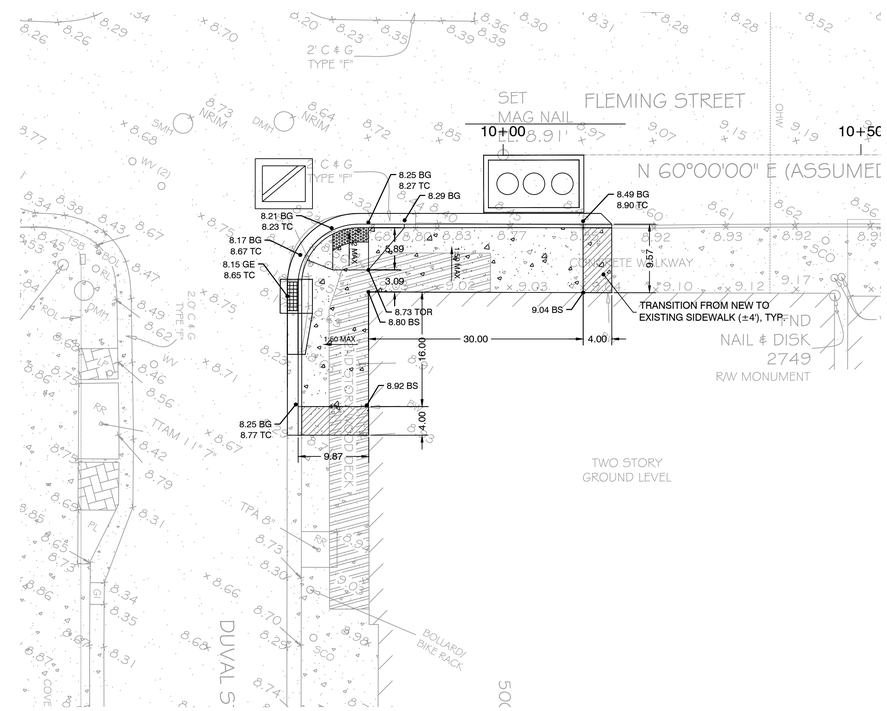

ADA ENLARGED PLAN A - FLEMING ST.

SCALE : 1" = 10'

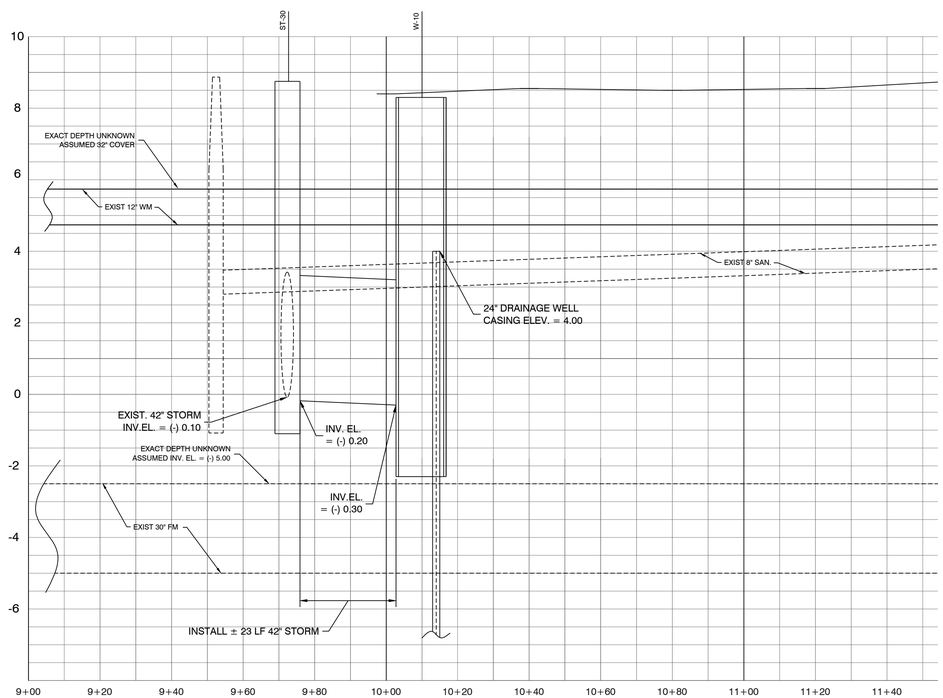

GENERAL NOTES:

1. LIMITS OF RECONSTRUCTION OF SIDEWALK, WITH THE CITY OF KEY WEST ROW, IS APPROXIMATE. ALL WORK SHALL TERMINATE AT THE NEAREST CONTROL JOINT.
2. ALL WATER MAIN RELOCATIO WORK MUST BE DONE IN ACCORDANCE WITH FKAA MINIMUM CONSTRUCTION STANDARDS AND SPECIFICATION AND ONLY WITH A REPRESENTATIVE OF THE FKAA ON-SITE.

PROFILE SCALE:
SCALE HORIZONTAL: 1"=20'
SCALE VERTICAL: 1"=2'

CIVIL ENGINEERING • REGULATORY PERMITTING • CONSTRUCTION MANAGEMENT
KEY WEST OFFICE
1010 EAST KENNEDY DRIVE, SUITE 400
KEY WEST, FLORIDA 33040
TEL: (305) 293-9440 FAX: (305) 296-0243
TAMPA OFFICE
CONCOURSE CENTER
3507 EAST FRONTAGE ROAD, SUITE 140
TAMPA, FLORIDA 33607
TEL: (813) 579-1616 FAX: (813) 289-0710
PEREZ ENGINEERING & DEVELOPMENT, INC
CERTIFICATE OF AUTHORIZATION No. 8579
ALLEN E. PEREZ, P.E.
Florida P.E. NO. 51468

December 14, 2012

ORIGINAL: SEPTEMBER 2012
REVISIONS:
1
2
3
4
5
6

EAST FRONT ST. FLOOD MITIGATION PROJECT

FLEMING STREET
PLAN & PROFILE

CITY OF KEY WEST
3121 FLAGLER AVE.
KEY WEST, FL 33040

JOB NO. 121001
DRAWN RTM
DESIGNED AEP
CHECKED AEP
QC
SHEET C-6

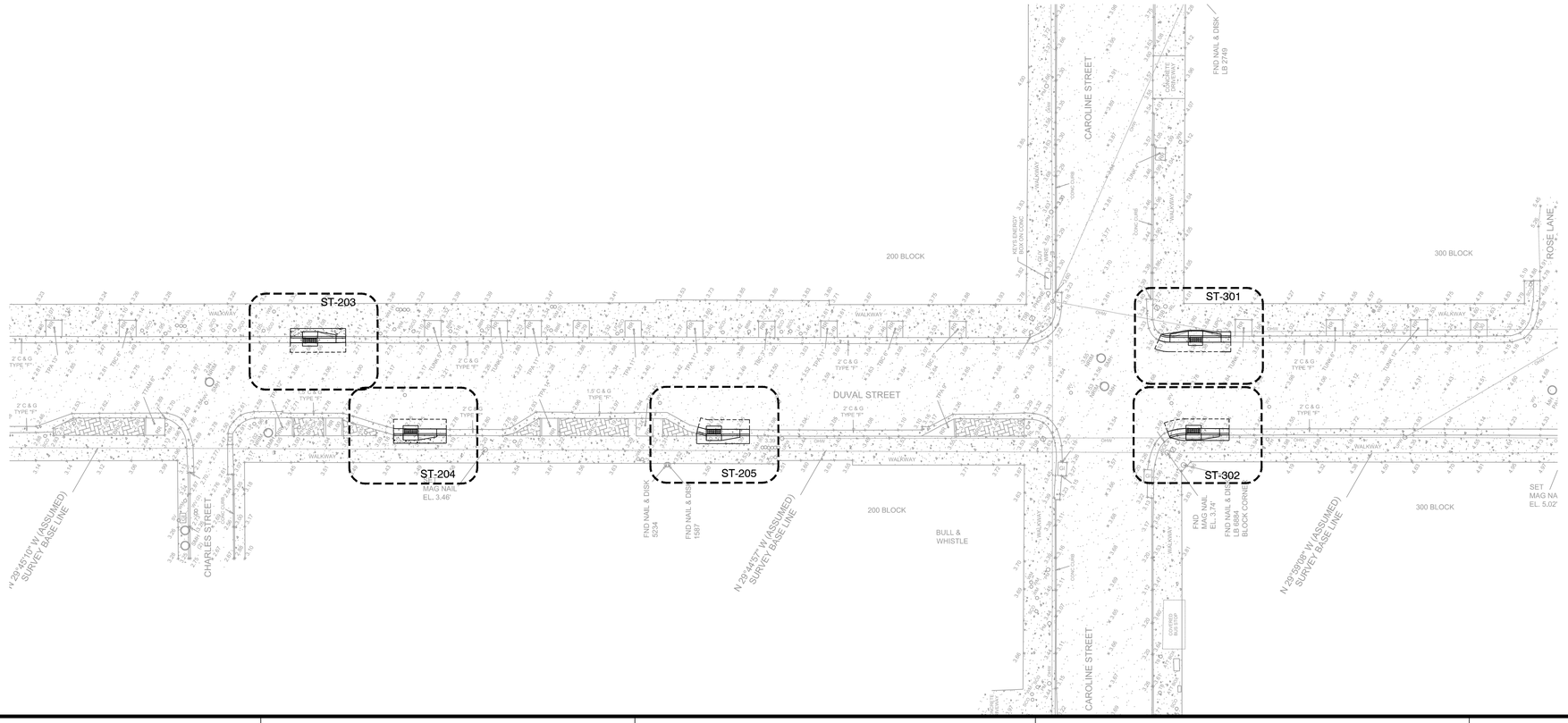

ST- 203

- REMOVE EXIST CURB INLET TOP
- PROVIDE CURB / GUTTER TRANSITION AS REQUIRED
- INSTALL FDOT TYPE 5 CURB INLET TOP
  G.E. = 2.66

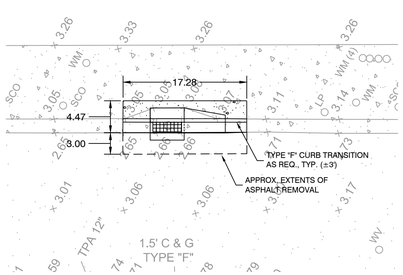

ST- 204

- REMOVE EXIST CURB INLET TOP
- PROVIDE CURB / GUTTER TRANSITION AS REQUIRED
- INSTALL FDOT TYPE 5 CURB INLET TOP
  G.E. = 2.75

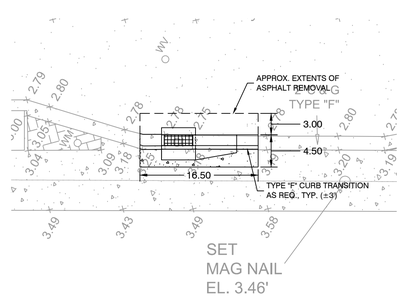

ST- 205

- REMOVE EXIST CURB INLET TOP
- BRICK PAVER REMOVAL
- PROVIDE CURB / GUTTER TRANSITION AS REQUIRED
- INSTALL FDOT TYPE 5 CURB INLET TOP
  G.E. = 2.95

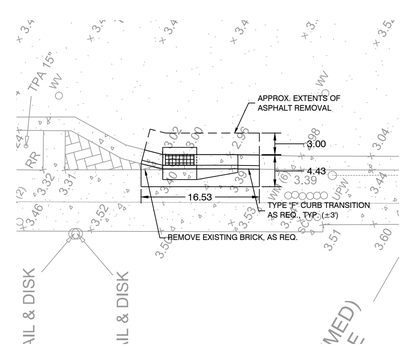

ST- 301

- REMOVE EXIST CURB INLET TOP
- PROVIDE TEMPORARY UPC SUPPORT AS NECESSARY
- PROVIDE CURB / GUTTER TRANSITION AS REQUIRED
- INSTALL FDOT TYPE 6 CURB INLET
  G.E. = 3.35

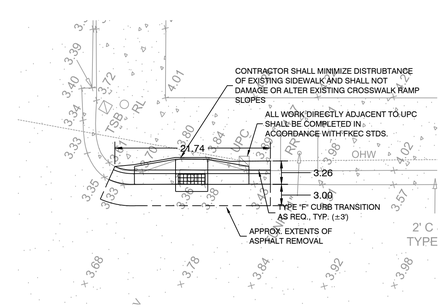

ST- 302

- REMOVE EXIST CURB INLET TOP
- REMOVE / RECONSTRUCT CORNER RADIUS / ADA IMPROVEMENTS
- PROVIDE CURB / GUTTER TRANSITION AS REQUIRED
- INSTALL FDOT TYPE 6 CURB INLET TOP
  G.E. = 3.35

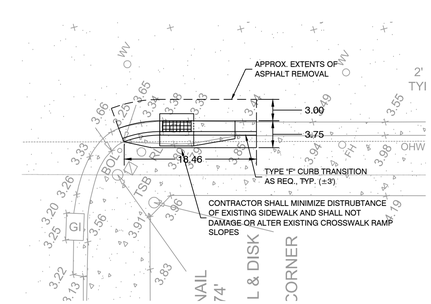

SCALE 1"=10'
BAR IS TWO INCHES ON ORIGINAL DRAWINGS IF NOT TWO INCHES ON THIS SHEET ADJUST SCALES ACCORDINGLY

CIVIL ENGINEERING • REGULATORY PERMITTING • CONSTRUCTION MANAGEMENT

PEREZ ENGINEERING & DEVELOPMENT, INC
CERTIFICATE OF AUTHORIZATION No. 8579

KEY WEST OFFICE
1010 EAST KENNEDY DRIVE, SUITE 400
KEY WEST, FLORIDA 33040
TEL: (305) 293-9440 FAX: (305) 296-0243

TAMPA OFFICE
CONCOURSE CENTER
3507 EAST FRONTAGE ROAD, SUITE 140
TAMPA, FLORIDA 33607
TEL: (813) 579-1616 FAX: (813) 289-0710

ALLEN E. PEREZ, P.E.
Florida P.E. NO. 51468
December 14, 2012

ORIGINAL: *SEPTEMBER 2012*

REVISIONS:
1
2
3
4
5
6

EAST FRONT ST. FLOOD MITIGATION PROJECT

DUVAL STREET CORRIDOR

CITY OF KEY WEST
3121 FLAGLER AVE.
KEY WEST, FL 33040

JOB NO. *121001*
DRAWN *RTM*
DESIGNED *AEP*
CHECKED *AEP*
QC
SHEET

C-16

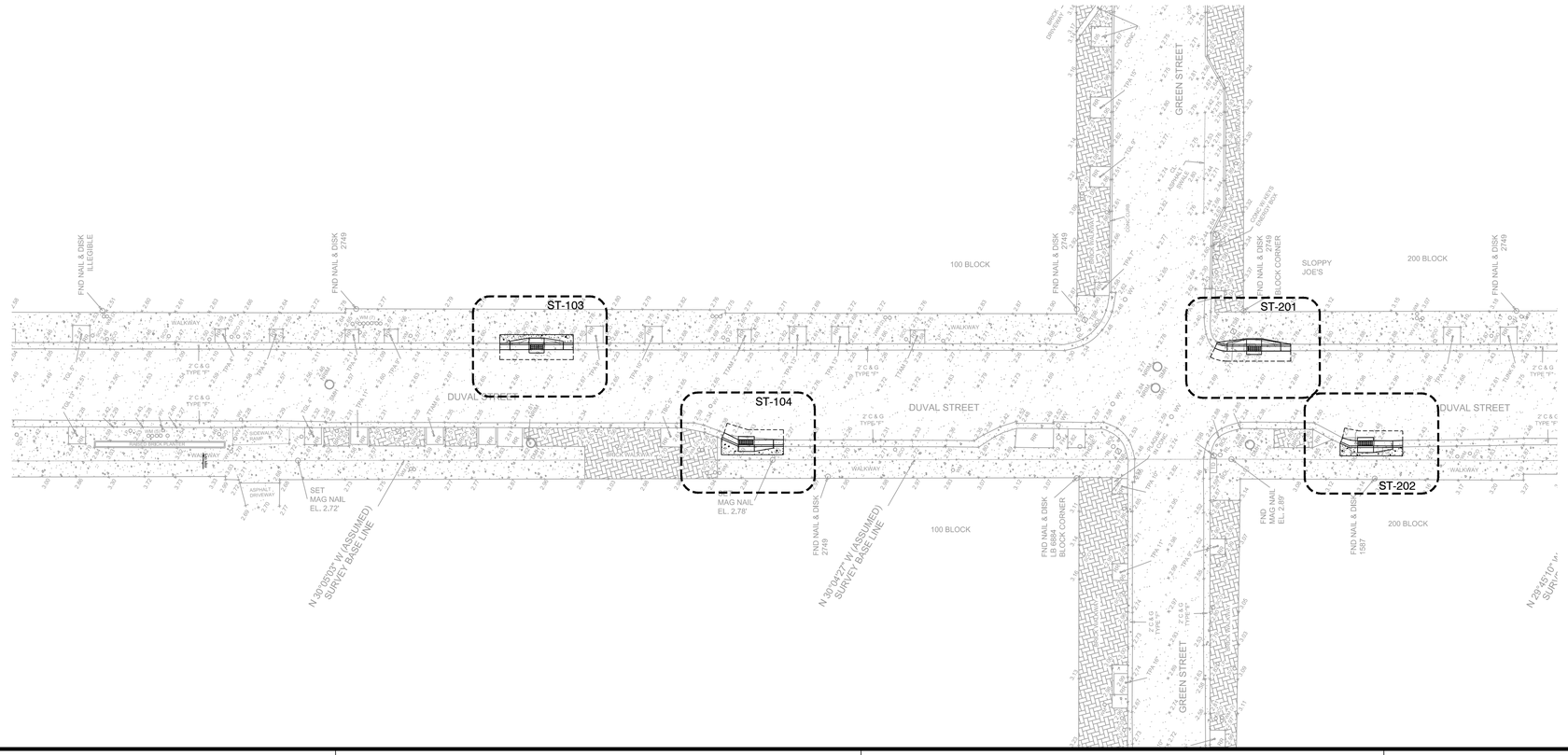

SCALE 1"=20'
BAR IS TWO INCHES ON ORIGINAL DRAWINGS IF NOT TWO INCHES ON THIS SHEET ADJUST SCALES ACCORDINGLY

ST- 103

- REMOVE EXIST CURB INLET TOP
- REMOVE / RELOCATE LIGHT POLE
- ADJUST WM / SEWER CLEANOUT BOXES, AS REQUIRED
- PROVIDE CURB / GUTTER TRANSITION AS REQUIRED
- INSTALL FDOT TYPE 6 CURB INLET TOP
  G.E. = 2.19

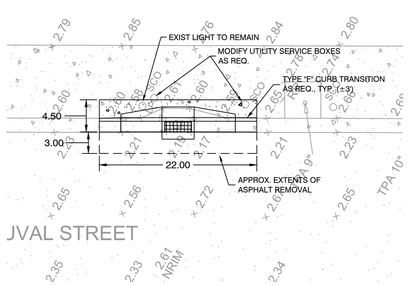

ST- 104

- REMOVE EXIST CURB INLET TOP
- PROVIDE CURB / GUTTER TRANSITION AS REQUIRED
- INSTALL FDOT TYPE 5 CURB INLET TOP
  G.E. = 2.30

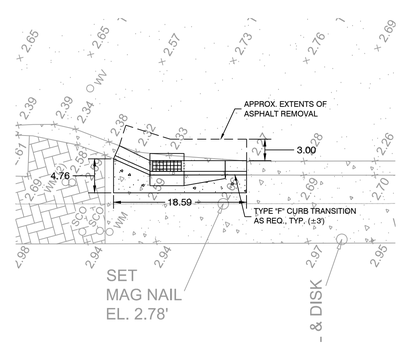

ST- 201

- REMOVE EXIST CURB INLET TOP
- ADJUST ELECTRICAL / TRAFFIC CONTROL/ WM / SEWER CLEANOUT BOXES, AS REQUIRED
- PROVIDE CURB / GUTTER TRANSITION AS REQUIRED
- INSTALL FDOT TYPE 6 CURB INLET TOP
  G.E. = 2.30

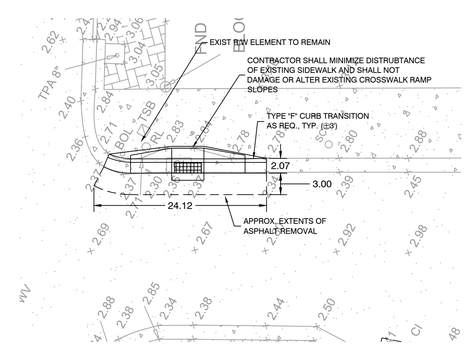

ST- 202

- REMOVE EXIST CURB INLET TOP
- PROVIDE CURB / GUTTER TRANSITION AS REQUIRED
- INSTALL FDOT TYPE 5 CURB INLET TOP
  G.E. = 2.41

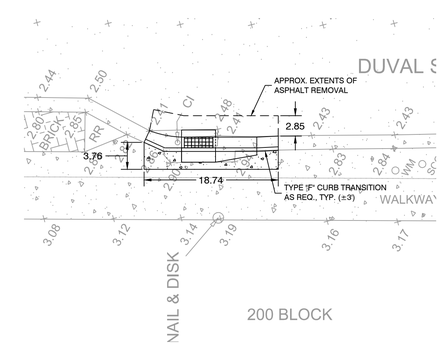

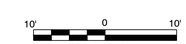

SCALE 1"=10'
BAR IS TWO INCHES ON ORIGINAL DRAWINGS IF NOT TWO INCHES ON THIS SHEET ADJUST SCALES ACCORDINGLY

CIVIL ENGINEERING • REGULATORY PERMITTING • CONSTRUCTION MANAGEMENT
KEY WEST OFFICE
1010 EAST WHITEHEAD STREET, SUITE 400
KEY WEST, FLORIDA 33040
TEL: (305) 293-9440 FAX: (305) 296-0243
TAMPA OFFICE
CONCOURSE CENTER
3507 EAST FRONTAGE ROAD, SUITE 140
TAMPA, FLORIDA 33607
TEL: (813) 579-1616 FAX: (813) 289-0710
PEREZ ENGINEERING & DEVELOPMENT, INC
CERTIFICATE OF AUTHORIZATION No. 8579
ALLEN E. PEREZ, P.E.
Florida P.E. NO. 51468
December 14, 2012

REVISIONS:
1
2
3
4
5
6

ORIGINAL: SEPTEMBER 2012

EAST FRONT ST. FLOOD MITIGATION PROJECT

DUVAL STREET CORRIDOR

CITY OF KEY WEST
3121 FLAGLER AVE.
KEY WEST, FL 33040

JOB NO. 121001
DRAWN RTM
DESIGNED AEP
CHECKED AEP
QC
SHEET C-15

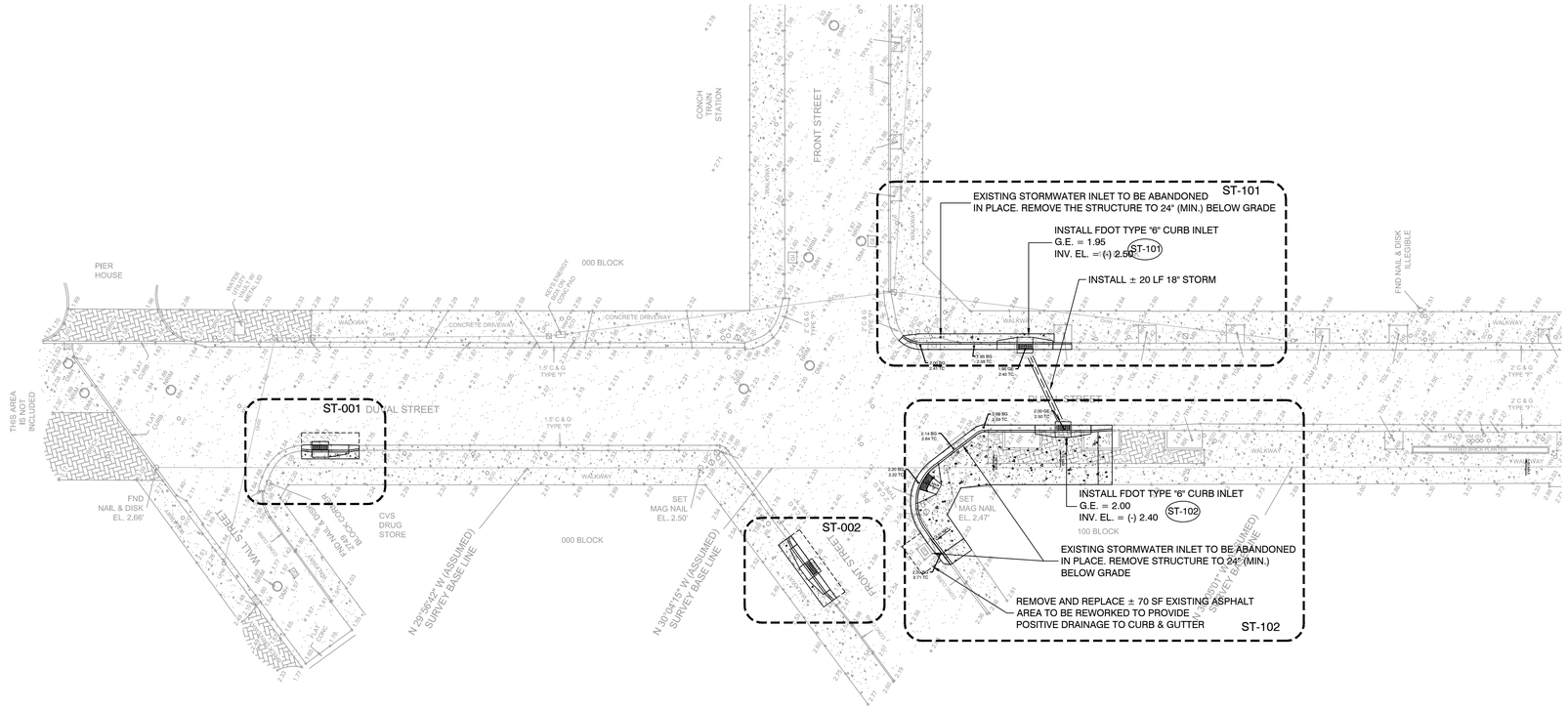

BAR IS TWO INCHES ON ORIGINAL DRAWINGS IF NOT TWO INCHES ON THIS SHEET ADJUST SCALES ACCORDINGLY

ST- 001

- REMOVE EXIST CURB INLET TOP
- PROVIDE CURB / GUTTER TRANSITION AS REQUIRED
- INSTALL FDOT TYPE 5 CURB INLET TOP
  G.E. = 1.70

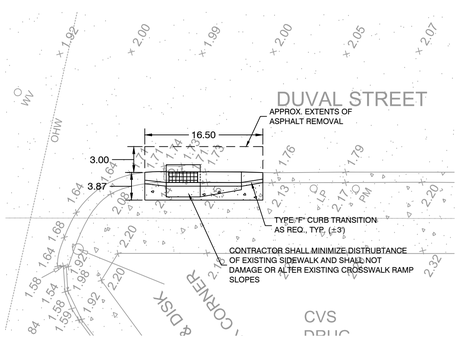

ST- 002

- REMOVE EXIST CURB INLET TOP
- ADJUST WATER UTILITY BOX, AS REQUIRED
- PROVIDE CURB / GUTTER TRANSITION AS REQUIRED
- INSTALL FDOT TYPE 6 CURB INLET TOP
  G.E. = 1.65

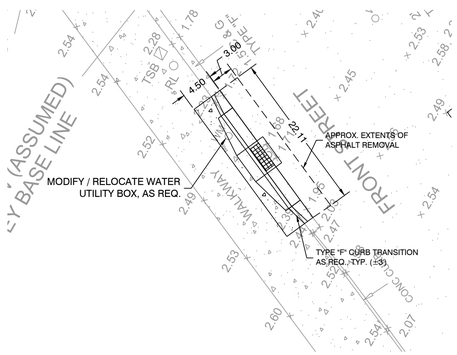

ST- 101

- REMOVE EXIST CURB INLET TOP AND ABANDON STRUCTURE TO 24" (MIN. BELOW GRADE
- PROVIDE CURB / GUTTER TRANSITION AS REQUIRED
- INSTALL FDOT TYPE 6 CURB INLET TOP AND STRUCTURE BOTTOM

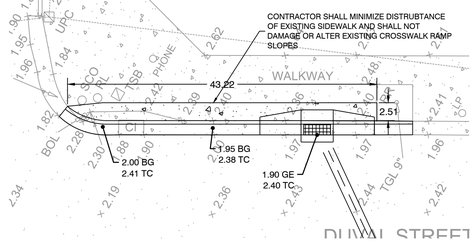

- ST- 102
- REMOVE EXIST DITCH BOTTOM INLET TOP AND ABANDON STRUCTURE TO 24" (MIN. BELOW GRADE
- PROVIDE CURB / GUTTER TRANSITION AS REQUIRED
- INSTALL FDOT TYPE 6 CURB INLET TOP AND STRUCTURE BOTTOM

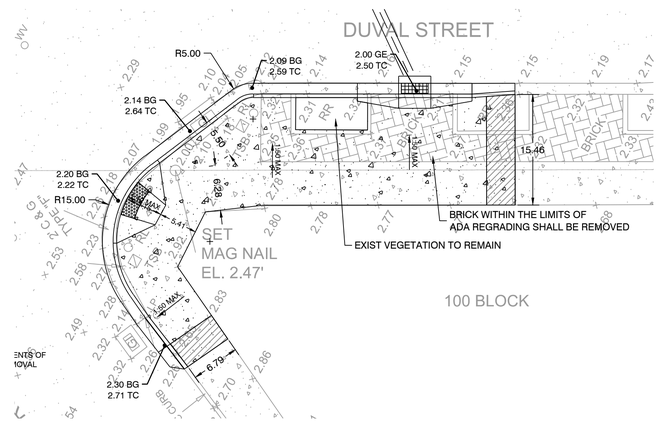

10' 0 10'
SCALE 1"=10'
BAR IS TWO INCHES ON ORIGINAL DRAWINGS IF NOT TWO INCHES ON THIS SHEET ADJUST SCALES ACCORDINGLY

CIVIL ENGINEERING • REGULATORY PERMITTING • CONSTRUCTION MANAGEMENT

KEY WEST OFFICE
1010 EAST KENNEDY DRIVE, SUITE 400
KEY WEST, FLORIDA 33040
TEL: (305) 293-9440 FAX: (305) 296-0243

TAMPA OFFICE
CONCOURSE CENTER
3507 EAST FRONTAGE ROAD, SUITE 140
TAMPA, FLORIDA 33607
TEL: (813) 579-1616 FAX: (813) 289-0710

PEREZ ENGINEERING & DEVELOPMENT, INC
CERTIFICATE OF AUTHORIZATION No. 8579

ALLEN E. PEREZ, P.E.
Florida P.E. NO. 51468
December 14, 2012

ORIGINAL: SEPTEMBER 2012

REVISIONS:
1
2
3
4
5
6

EAST FRONT ST. FLOOD MITIGATION PROJECT

DUVAL STREET CORRIDOR

CITY OF KEY WEST
3121 FLAGLER AVE.
KEY WEST, FL 33040

JOB NO. 121001
DRAWN RTM
DESIGNED AEP
CHECKED AEP
QC
SHEET C-14

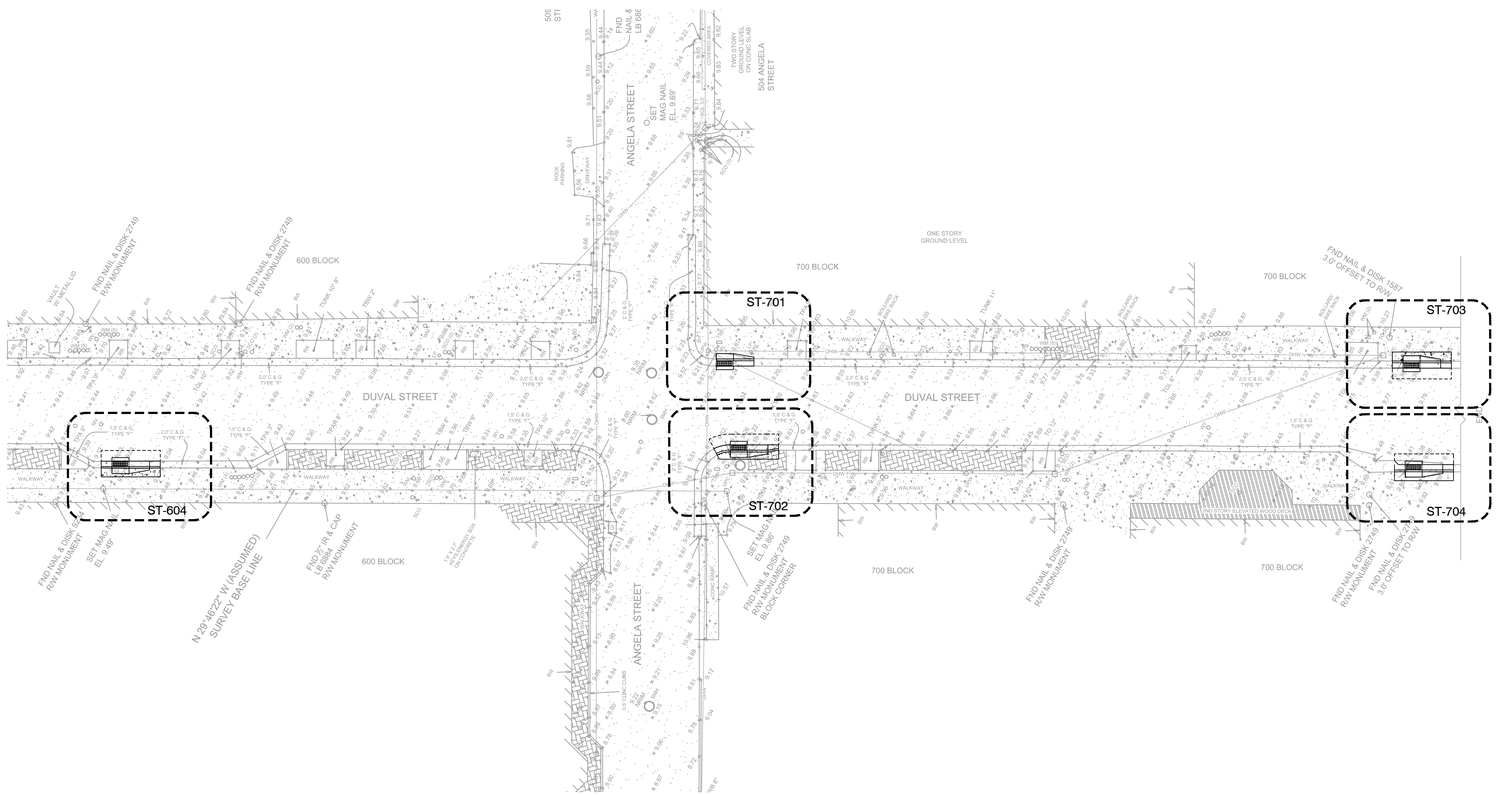

20' 0 20'
SCALE 1"=20'
BAR IS TWO INCHES ON ORIGINAL DRAWINGS IF NOT TWO INCHES ON THIS SHEET ADJUST SCALES ACCORDINGLY

ST- 604
- REMOVE EXIST CURB INLET TOP
- PROVIDE CURB / GUTTER TRANSITION AS REQUIRED
- INSTALL FDOT TYPE 5 CURB INLET TOP

G.E. = 9.03

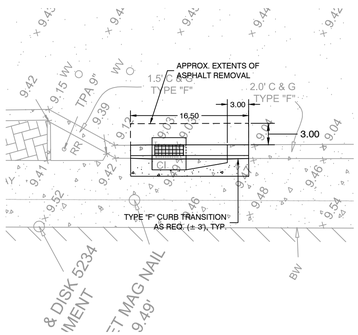

ST- 701
- REMOVE EXIST CURB INLET TOP
- PROVIDE CURB / GUTTER TRANSITION AS REQUIRED
- INSTALL FDOT TYPE 5 CURB INLET TOP

G.E. = 9.22

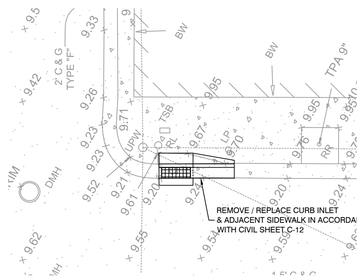

ST- 702
- REMOVE EXIST DITCH BOTTOM INLET
- REMOVE BRICK, AS REQUIRED
- RELOCATE EXIST LIGHT POLE
- PROVIDE CURB / GUTTER TRANSITION AS REQUIRED
- INSTALL FDOT TYPE 5 CURB INLET TOP

G.E. = 9.22

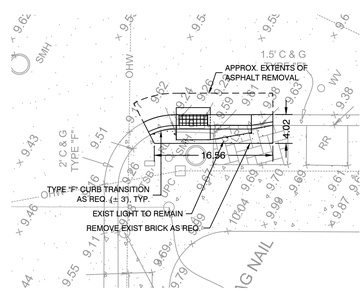

ST- 703
- REMOVE EXIST CURB INLET TOP
- PROVIDE CURB / GUTTER TRANSITION AS REQUIRED
- INSTALL FDOT TYPE 5 CURB INLET TOP

G.E. = 9.32

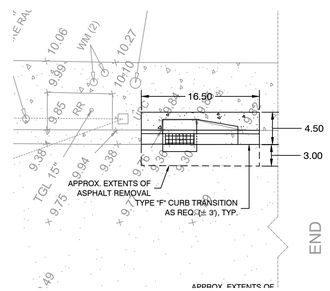

ST- 704
- REMOVE EXIST CURB INLET TOP
- PROVIDE CURB / GUTTER TRANSITION AS REQUIRED
- INSTALL FDOT TYPE 5 CURB INLET TOP

G.E. = 9.38

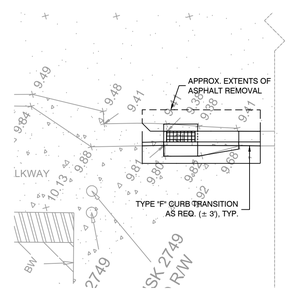

10' 0 10'
SCALE 1"=10'
BAR IS TWO INCHES ON ORIGINAL DRAWINGS IF NOT TWO INCHES ON THIS SHEET ADJUST SCALES ACCORDINGLY

CIVIL ENGINEERING • REGULATORY PERMITTING • CONSTRUCTION MANAGEMENT
PEREZ ENGINEERING & DEVELOPMENT, INC
CERTIFICATE OF AUTHORIZATION No. 8579
KEY WEST OFFICE
1010 EAST KENNEDY DRIVE, SUITE 400
KEY WEST, FLORIDA 33040
TEL: (305) 293-9440 FAX: (305) 296-0243
TAMPA OFFICE
CONCOURSE CENTER
3507 EAST FRONTAGE ROAD, SUITE 140
TAMPA, FLORIDA 33607
TEL: (813) 579-1616 FAX: (813) 289-0710
ALLEN E. PEREZ, P.E.
Florida P.E. NO. 51468
December 14, 2012

REVISIONS:
1
2
3
4
5
6

ORIGINAL: *SEPTEMBER 2012*

EAST FRONT ST. FLOOD MITIGATION PROJECT

DUVAL STREET CORRIDOR

CITY OF KEY WEST
3121 FLAGLER AVE.
KEY WEST, FL 33040

JOB NO. 121001
DRAWN RTM
DESIGNED AEP
CHECKED AEP
QC
SHEET C-20

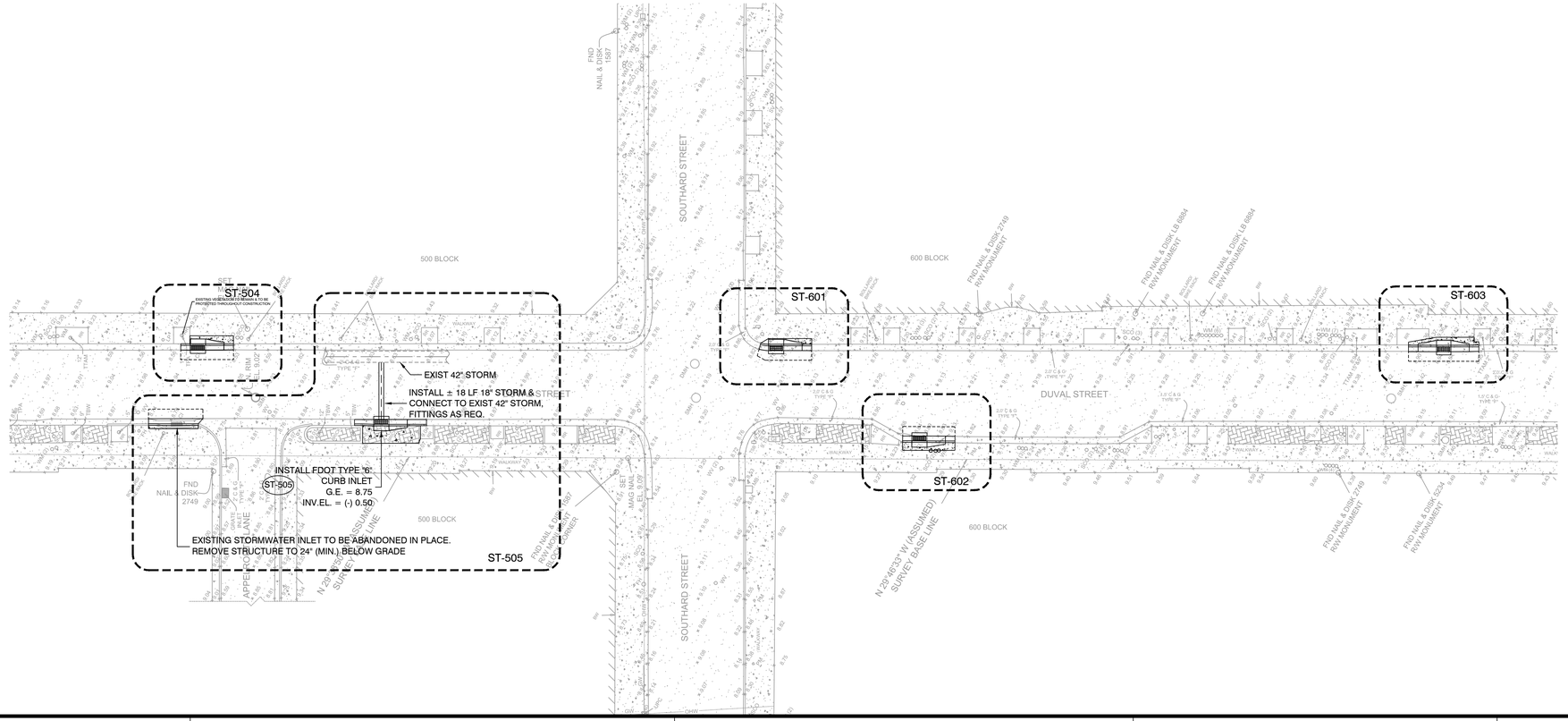

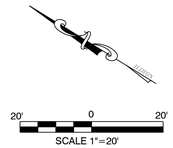

ST- 504

- REMOVE EXIST CURB INLET TOP
- REMOVE RECYCLED RUBBER, AS REQUIRED
- PROTECT EXIST VEGETATION
- PROVIDE CURB / GUTTER TRANSITION AS REQUIRED
- INSTALL FDOT TYPE 5 CURB INLET TOP
  G.E. = 8.50

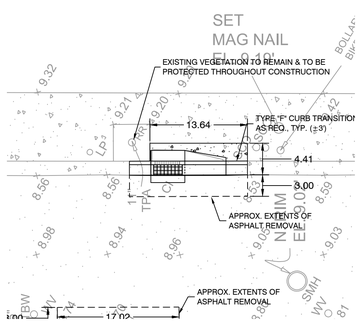

ST- 505

- REMOVE EXIST CURB INLET TOP AND ABANDON STRUCTURE TO 24" (MIN.) BELOW GRADE
- PROVIDE CURB / GUTTER TRANSITION AS REQUIRED
- INSTALL FDOT TYPE 5 CURB INLET TOP AND STRUCTURE BOTTOM

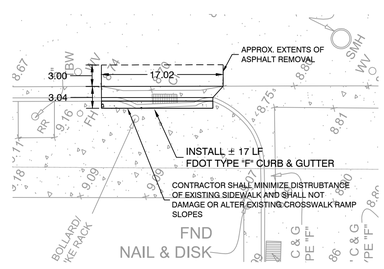

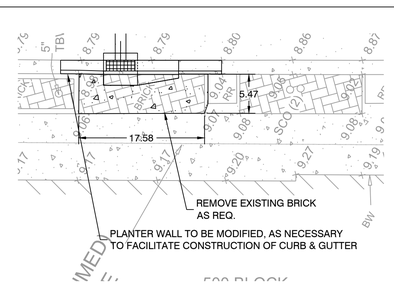

ST- 601

- REMOVE EXIST CURB INLET TOP
- EXISTING LIGHT POLE TO REMAIN
- PROVIDE CURB / GUTTER TRANSITION AS REQUIRED
- INSTALL FDOT TYPE 5 CURB INLET TOP
  G.E. = 8.72

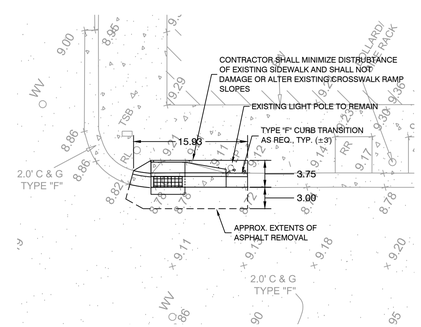

ST- 602

- REMOVE EXIST CURB INLET TOP
- ADJUST WM / SEWER CLEANOUT BOXES AS REQUIRED
- PROVIDE CURB / GUTTER TRANSITION AS REQUIRED
- INSTALL FDOT TYPE 5 CURB INLET TOP
  G.E. = ± 8.65

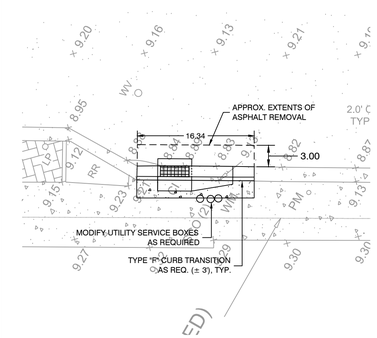

ST- 603

- REMOVE EXIST CURB INLET TOP
- REMOVE RECYCLED RUBBER, AS REQUIRED
- PROTECT EXIST VEGETATION
- PROVIDE CURB / GUTTER TRANSITION AS REQUIRED
- INSTALL FDOT TYPE 6 CURB INLET TOP
  G.E. = ±8.85

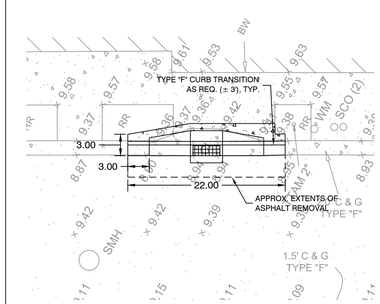

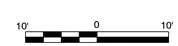

CIVIL ENGINEERING • REGULATORY PERMITTING • CONSTRUCTION MANAGEMENT

PEREZ ENGINEERING & DEVELOPMENT, INC
CERTIFICATE OF AUTHORIZATION No. 8579

KEY WEST OFFICE
1010 EAST KENNEDY DRIVE, SUITE 400
KEY WEST, FLORIDA 33040
TEL: (305) 293-9440 FAX: (305) 296-0243

TAMPA OFFICE
CONCOURSE CENTER
3507 EAST FRONTAGE ROAD, SUITE 140
TAMPA, FLORIDA 33607
TEL: (813) 579-1616 FAX: (813) 289-0710

ALLEN E. PEREZ, P.E.
Florida P.E. NO. 51468
August 7, 2012

ORIGINAL: *SEPTEMBER 2012*

REVISIONS:
1
2
3
4
5
6

EAST FRONT ST. FLOOD MITIGATION PROJECT

DUVAL STREET CORRIDOR

CITY OF KEY WEST
3121 FLAGLER AVE.
KEY WEST, FL 33040

JOB NO. 121001
DRAWN RTM
DESIGNED AEP
CHECKED AEP
QC
SHEET

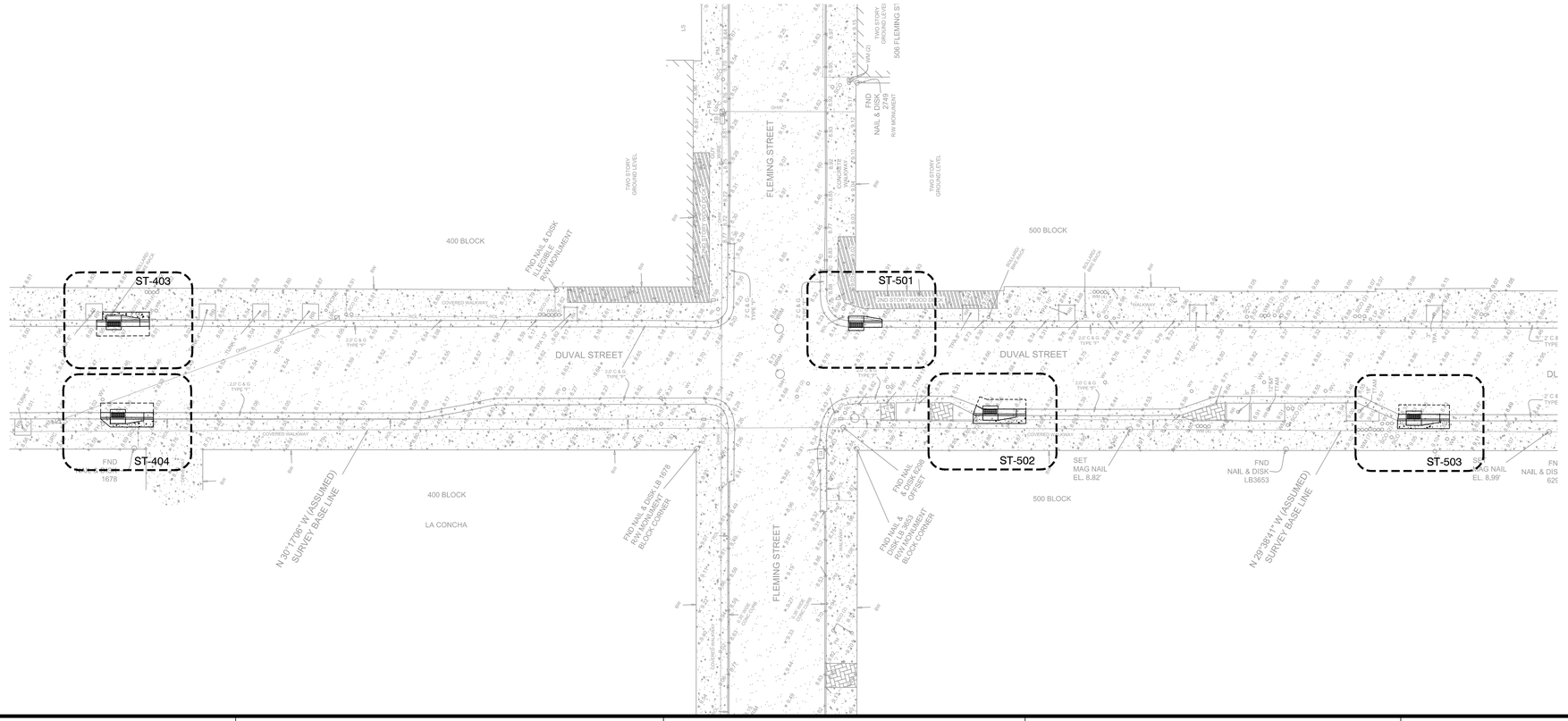

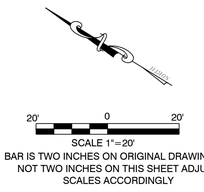

ST- 403
- REMOVE EXIST CURB INLET TOP
- RELOCATE EXIST BIKE STANION
- ADJUST WM / SEWER CLEANOUT BOXES, AS REQUIRED
- PROVIDE CURB / GUTTER TRANSITION AS REQUIRED
- INSTALL FDOT TYPE 5 CURB INLET TOP
  G.E. = 7.95

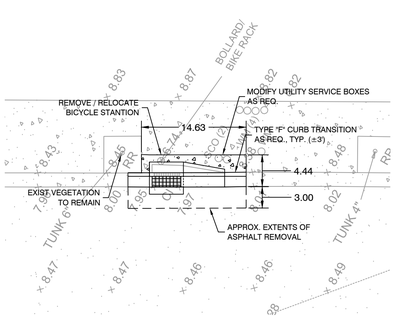

ST- 404
- REMOVE EXIST CURB INLET TOP
- PROVIDE CURB / GUTTER TRANSITION AS REQUIRED
- INSTALL FDOT TYPE 5 CURB INLET TOP
  G.E. = 7.95

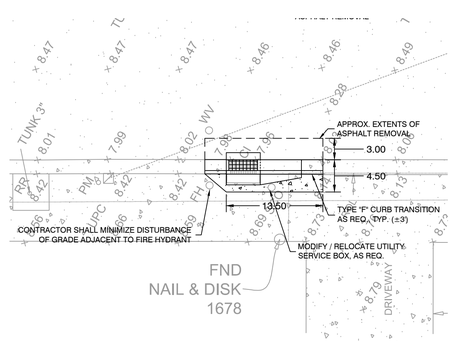

ST- 501
- REMOVE EXIST CURB INLET TOP
- PROVIDE CURB / GUTTER TRANSITION AS REQUIRED
- INSTALL FDOT TYPE 5 CURB INLET TOP
  G.E. = 8.15
- SEE CIVIL SHEET C-6 FOR COORD.

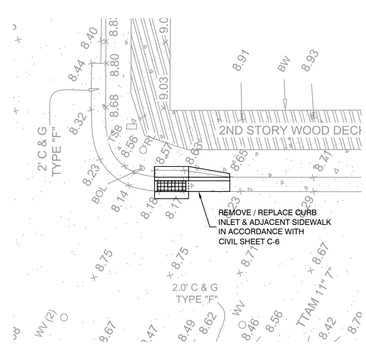

ST- 502
- REMOVE EXIST CURB INLET TOP
- PROVIDE CURB / GUTTER TRANSITION AS REQUIRED
- INSTALL FDOT TYPE 5 CURB INLET TOP
  G.E. = 8.35

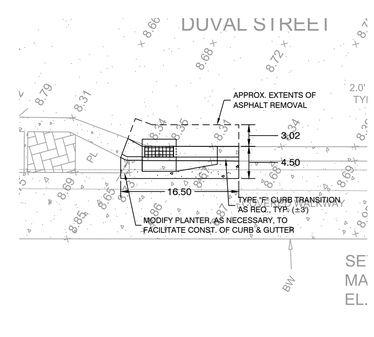

ST- 503
- REMOVE EXIST CURB INLET TOP
- PROVIDE CURB / GUTTER TRANSITION AS REQUIRED
- INSTALL FDOT TYPE 5 CURB INLET TOP
  G.E. = 8.35

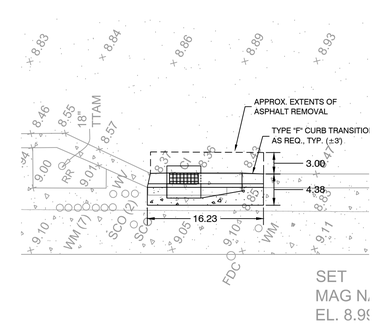

10' 0 10'
SCALE 1"=10'
BAR IS TWO INCHES ON ORIGINAL DRAWINGS IF NOT TWO INCHES ON THIS SHEET ADJUST SCALES ACCORDINGLY

CIVIL ENGINEERING • REGULATORY PERMITTING • CONSTRUCTION MANAGEMENT
PEREZ ENGINEERING & DEVELOPMENT, INC
CERTIFICATE OF AUTHORIZATION No. 8579
KEY WEST OFFICE
1010 EAST KENNEDY DRIVE, SUITE 400
KEY WEST, FLORIDA 33040
TEL: (305) 293-9440 FAX: (305) 296-0243
TAMPA OFFICE
CONCOURSE CENTER
3507 EAST FRONTAGE ROAD, SUITE 140
TAMPA, FLORIDA 33607
TEL: (813) 579-1616 FAX: (813) 289-0710
ALLEN E. PEREZ, P.E.
Florida P.E. NO. 51468
December 14, 2012

REVISIONS:
1
2
3
4
5
6

ORIGINAL: SEPTEMBER 2012

EAST FRONT ST. FLOOD MITIGATION PROJECT

DUVAL STREET CORRIDOR

CITY OF KEY WEST
3121 FLAGLER AVE.
KEY WEST, FL 33040

JOB NO. 121001
DRAWN RTM
DESIGNED AEP
CHECKED AEP
QC
SHEET C-18

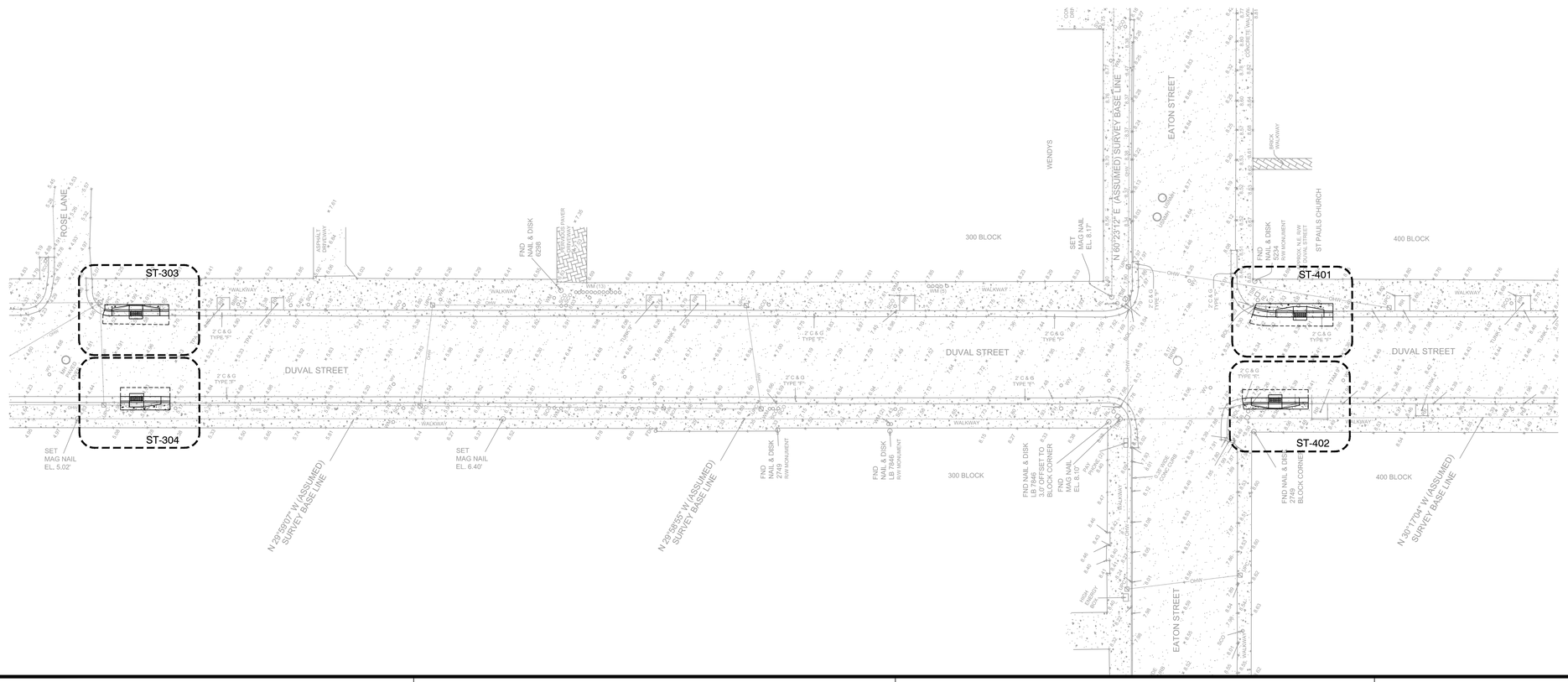

ST- 303

- REMOVE EXIST CURB INLET TOP
- RELOCATE EXIST BIKE STANION
- PROVIDE CURB / GUTTER TRANSITION AS REQUIRED
- INSTALL FDOT TYPE 6 CURB INLET TOP
  G.E. = 4.55

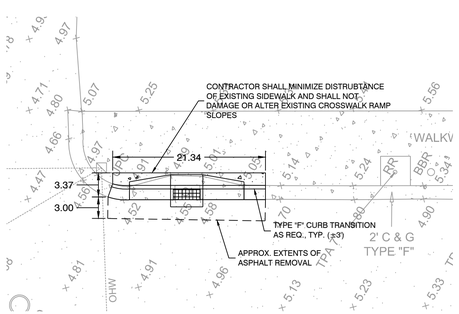

ST- 304

- REMOVE EXIST CURB INLET TOP
- ADJUST WM / SEWER CLEANOUT BOXES, AS REQUIRED
- PROVIDE CURB / GUTTER TRANSITION AS REQUIRED
- INSTALL FDOT TYPE 5 CURB INLET TOP
  G.E. = 4.53

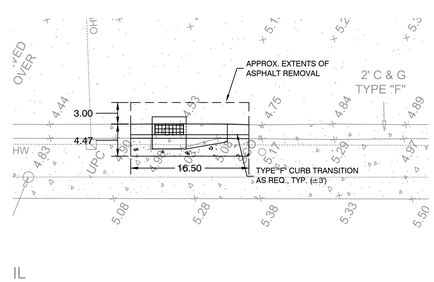

ST- 401

- REMOVE EXIST CURB INLET TOP AND ABANDON EXISTING STRUCTURE IN PLACE. REMOVE STRUCTURE TO 24" (MIN.) BELOW GRADE
- PROVIDE CURB / GUTTER TRANSITION AS REQUIRED
- INSTALL FDOT TYPE 6 CURB INLET TOP & STRUCTURE BOTTOM.
  G.E. = 7.92
  INV. EL. = (-) 1.95 N & S

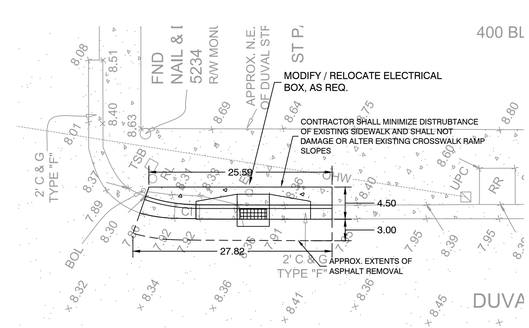

ST- 402

- REMOVE EXIST CURB INLET TOP
- PROVIDE CURB / GUTTER TRANSITION AS REQUIRED
- INSTALL FDOT TYPE 6 CURB INLET TOP
  G.E. = 7.95

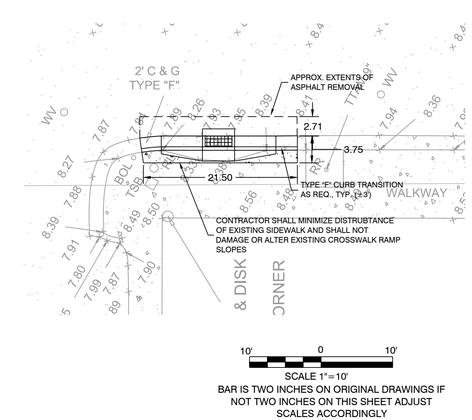

CIVIL ENGINEERING • REGULATORY PERMITTING • CONSTRUCTION MANAGEMENT

Key West Office
1010 East Kennedy Drive, Suite 400
Key West, Florida 33040
Tel: (305) 293-9440 Fax: (305) 296-0243

Tampa Office
Concourse Center
3507 East Frontage Road, Suite 140
Tampa, Florida 33607
Tel: (813) 579-1616 Fax: (813) 289-0710

PEREZ ENGINEERING & DEVELOPMENT, INC
Certificate of Authorization No. 8579

ALLEN E. PEREZ, P.E.
Florida P.E. NO. 51468
August 7, 2012

ORIGINAL: *SEPTEMBER 2012*

REVISIONS:
1
2
3
4
5
6

EAST FRONT ST. FLOOD MITIGATION PROJECT

DUVAL STREET CORRIDOR

CITY OF KEY WEST
3121 FLAGLER AVE.
KEY WEST, FL 33040

JOB NO. 121001
DRAWN RTM
DESIGNED AEP
CHECKED AEP
QC
SHEET C-17

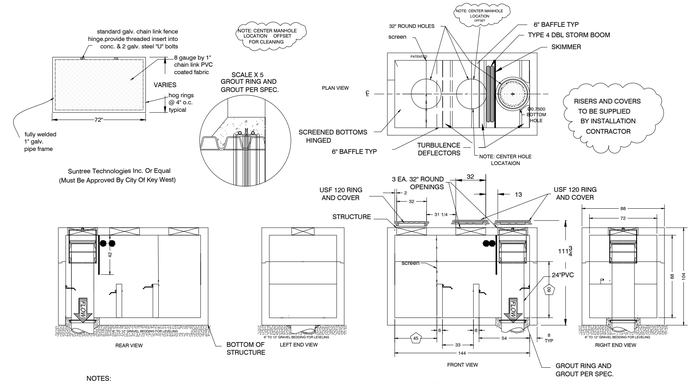

NOTES:

1. CONCRETE 28 DAY COMPRESSIVE STRENGTH fc=5,000 PSI.
2. REINFORCING: ASTM A-615, GRADE 60.
3. SUPPORTS AN H20 LOADING AS INDICATED BY AASHTO.
4. JOINT SEALANT: BUTYL RUBBER SS-S-00210
5. ALL WALLS, TOP + BOTTOM ARE 8" THICK.
6. STEEL EMBEDDED IN CONCRETE 3" MINIMUM FROM EDGE
7. GROUTING RING TO BE SUPPLIED BY INSTALL CONTRACTOR.
8. DIMENSIONS PENTAGON BLOCK ARE CRITICAL DIMENSIONS.
9. FRAMES & GRATE WHEN REQUIRED SHALL BE USF 4160-6611-GALVANIZED COATED

1 / C-21 Typical Triple Chamber Baffle Box with Injection Well (Gravity)
NTS

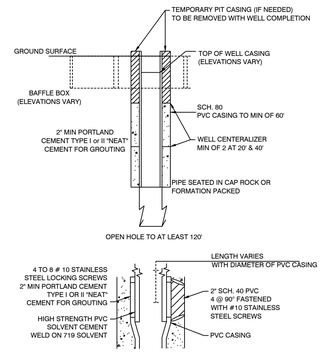

2 / C-21 Stormwater Injection Well (Gravity)
NTS

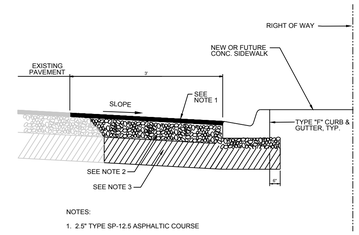

NOTES:

1. 2.5" TYPE SP-12.5 ASPHALTIC COURSE
2. 8" COMPACTED LIMEROCK BASE COURSE, 95% ASTM D-1557.
3. EXISTING SUBGRADE COMPACTED AND STABILIZED TO 98% MODIFIED PROCTOR VALUE.

3 / C-21 Asphalt Repair for Curb Construction
NTS

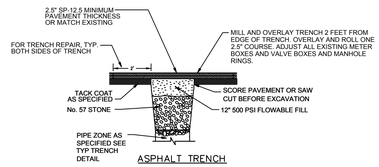

4 / C-21 Asphalt Surface Repair for Trench
NTS

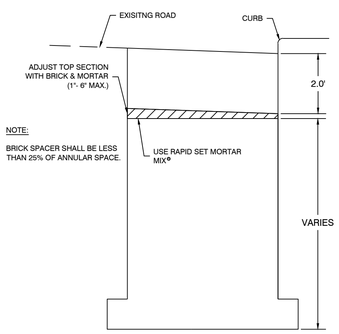

NOTE:

BRICK SPACER SHALL BE LESS THAN 25% OF ANNULAR SPACE.

5 / C-21 Catch Basin Adjustment Detail
NTS

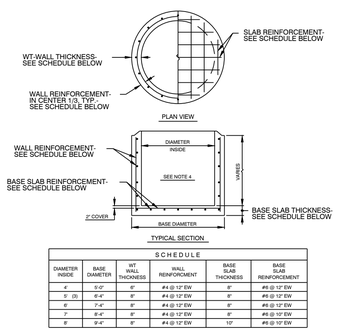

SCHEDULE

DIAMETER INSIDE	BASE DIAMETER	WT WALL THICKNESS	WALL REINFORCEMENT	BASE SLAB THICKNESS	BASE SLAB REINFORCEMENT
4'	5'-0"	6"	#4 @ 12" EW	8"	#6 @ 12" EW
5 (3)	6'-4"	8"	#4 @ 12" EW	8"	#6 @ 12" EW
6'	7'-4"	8"	#4 @ 12" EW	8"	#6 @ 12" EW
7	8'-4"	8"	#4 @ 12" EW	8"	#6 @ 12" EW
8'	9'-4"	8"	#4 @ 12" EW	10"	#6 @ 12" EW

NOTES:
1. FOR GENERAL NOTES, SEE STANDARD DETAIL-STORM STRUCTURE NOTES.
2. WALL REINFORCEMENT MAY BE WELDED WIRE AS PER ASTM C-478.
3. MAXIMUM SIZE ALLOWED FOR TYPE I MANHOLE.
4. ADD 2 #4 REINFORCING BARS AT 3" CENTERS AT THE TOP AND SIDES OF ALL WALL OPENINGS.

6 / C-21 Type I and II Manhole Base and Wall Detail
NTS

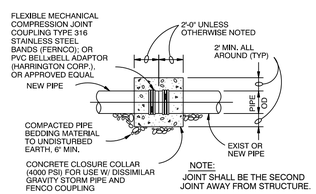

7 / C-21 Joint For Dissimilar Gravity Storm Pipe
NTS

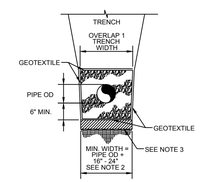

NOTES:

1. GEOTEXTILE MATERIAL AROUND ALL SANAITARY SEWER AND STORMWATER PIPES AND BOTTOM OF STRUCTURES, AND WHEN DIRECTED BY THE ENGINEER.
2. MAX PAYMENT PER Y/d SHALL BE IN ACCORDANCE WITH DIMENSIONS SHOWN OR ACTUAL DIMENSIONS, WHICHEVER IS LESS. NO ADDITIONAL PAYMENT WILL BE MADE FOR OVERLAP.
3. IF MUCK IS ENCOUNTERED IN TRENCH BED OVEREXCAVATE AND BACKFILL WITH A MINIMUM OF 2 FEET OF No. 4 ROCK.

8 / C-21 Typical Trench
NTS

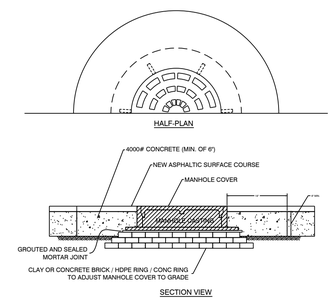

9 / C-21 H-20 Rated Manhole Detail
NTS

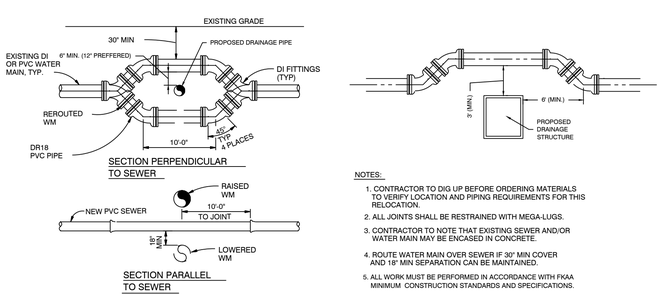

NOTES:

1. CONTRACTOR TO DIG UP BEFORE ORDERING MATERIALS TO VERIFY LOCATION AND PIPING REQUIREMENTS FOR THIS RELOCATION.
2. ALL JOINTS SHALL BE RESTRAINED WITH MEGA-LUGS.
3. CONTRACTOR TO NOTE THAT EXISTING SEWER AND/OR WATER MAIN MAY BE ENCASED IN CONCRETE.
4. ROUTE WATER MAIN OVER SEWER IF 30" MIN COVER AND 18" MIN SEPARATION CAN BE MAINTAINED.
5. ALL WORK MUST BE PERFORMED IN ACCORDANCE WITH FKAA MINIMUM CONSTRUCTION STANDARDS AND SPECIFICATIONS.
6. NO WORK SHALL BE PERFORMED ON ANY PORTION OF THE FKAA TRANSMISSION SYSTEM WITHOUT A REPRESENTATIVE OF THE FKAA PRESENT.

10 / C-21 Water Main Conflict Details
NTS

LOCATION OF PUBLIC WATER SYSYEM MAINS IN ACCORDANCE WITH F.A.C. RULE 62-555.314

Other Pipe	Horizontal Separation	Crossings (1)	Joint Spacing @ Crossings (Full Joint Centered)
Storm Sewer, Stormwater Force Main, Reclaimed Water (2)	3 ft. minimum	12 inches is the minimum, except for storm sewer, then 6 inches is the minimum and 12 inches is preferred	Alternate 3 ft. minimum
Vacuum Sanitary Sewer	10 ft. preferred 3 ft. minimum	12 inches preferred 6 inches minimum	Alternate 3 ft. minimum
Gravity or Pressure Sanitary Sewer, Sanitary Sewer Force Main, Reclaimed Water (4)	10 ft. preferred 6 ft. minimum (3)	12 inches is the minimum, except for gravity sewer, then 6 inches is the minimum and 12 inches is preferred	Alternate 6 ft. minimum
On-Site Sewage Treatment & Disposal System	10 ft. minimum	---	---

(1) Water main should cross above other pipe. Which water main must be below other pipe, the minimum separation is 12 inches.
(2) Reclaimed water regulated under Part III of Chapter 62-610, F.A.C.
(3) 3 ft. for gravity sanitary sewer where the bottom of the water main is laid at least 6 inches above the top of the gravity sanitary sewer.
(4) Reclaimed water not regulated under Part III of Chapter 62-610, F.A.C.

Disclaimer – This document is provided for your convenience only. Please refer to F.A.C. Rule 62-555.314 for additional construction requirements.

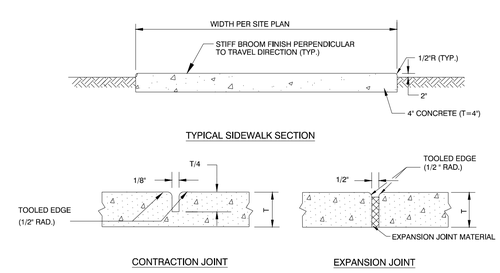

NOTES:

1. PROVIDE EXPANSION JOINTS WHERE NEW SIDEWALKS ABUT STRUCTURES AND CONTRACTION JOINTS AT INTERVALS EQUAL TO SIDEWALK WIDTH.
2. REPLACE CONCRETE SIDEWALKS AT SCORED JOINTS TO AVOID A PATCHED APPEARANCE. PROVIDE 2-INCH LEVELING COURSE BENEATH NEW SIDEWALK.

11 / C-21 Typical Sidewalk Detail
NTS

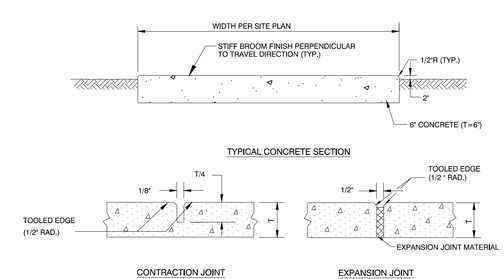

NOTES:

Materials and Construction shall conform to the requirements of Section 350 of FDOT Specifications.

12 / C-21 Typical Driveway Detail
NTS

CIVIL ENGINEERING • REGULATORY PERMITTING • CONSTRUCTION MANAGEMENT

KEY WEST OFFICE
1010 EAST KENNEDY DRIVE, SUITE 400
KEY WEST, FLORIDA 33040
TEL: (305) 293-9440 FAX: (305) 296-0243

TAMPA OFFICE
CONCOURSE CENTER
3507 EAST FRONTAGE ROAD, SUITE 140
TAMPA, FLORIDA 33610
TEL: (813) 379-1616 FAX: (813) 288-0710

PEREZ ENGINEERING & DEVELOPMENT, INC
CERTIFICATE OF AUTHORIZATION No. 8579

ALLEN E. PEREZ, P.E.
Florida P.E. NO. 51468

August 7, 2012

ORIGINAL: SEPTEMBER 2012

REVISIONS:
1
2
3
4
5
6

EAST FRONT ST. FLOOD MITIGATION PROJECT

CITY OF KEY WEST
3121 FLAGLER AVE.
KEY WEST, FL 33040

CIVIL DETAILS

JOB NO. 121001
DRAWN RTM
DESIGNED AEP
CHECKED AEP
QC
SHEET C-21

EROSION AND SEDIMENT CONTROL NOTES

1. THE CONTRACTOR IS RESPONSIBLE FOR REMOVING SILT FROM SITE IF NOT REUSABLE ON-SITE AND ASSURING PLAN ALIGNMENT AND GRADE IN ALL DITCHES AND SWALES AT COMPLETION OF CONSTRUCTION.
2. THE SITE CONTRACTOR IS RESPONSIBLE FOR REMOVING THE TEMPORARY EROSION AND SEDIMENT CONTROL DEVICES AFTER COMPLETION OF CONSTRUCTION AND ONLY WHEN AREAS HAVE BEEN STABILIZED.
3. ADDITIONAL PROTECTION - ON-SITE PROTECTION MUST BE PROVIDED THAT WILL NOT PERMIT SILT TO LEAVE THE PROJECT CONFINES DUE TO UNFORSEEN CONDITIONS OR ACCIDENTS.
4. CONTRACTOR SHALL INSURE THAT ALL DRAINAGE STRUCTURES, PIPES, ETC., ARE CLEANED OUT AND WORKING PROPERLY AT TIME OF ACCEPTANCE.
5. IF THE HAYBALES/ ROCK BAGS BECOMES CLOGGED WITH SEDIMENT SO THAT IT NO LONGER ADEQUETELY PERFORMS ITS FUNCTION, THE MATERIALS MUST BE PULLED AWAY FROM THE INLET, CLEANED AND REPLACED.
6. BALES SHALL BE EITHER WIRE-BOUND OR STRING-TIED WITH THE BINDINGS ORIENTED AROUND THE SIDES RATHER THAN OVER AND UNDER THE BALES.
7. BALES SHALL BE PLACED LENGTHWISE IN SINGLE ROW SURROUNDING THE INLET, WITH THE ENDS OF ADJACENT BALES PRESSED TOGETHER.
8. THE FILTER BARRIER SHALL BE ENTRENCHED AND BACK FILLED. A TRENCH SHALL BE EXCAVATED AROUND THE INLET AND WIDTH OF A BALE TO A MINIMUM DEPTH OF FOUR INCHES. AFTER THE BALES ARE STACKED, THE EXCAVATED SOIL SHALL BE BACK FILLED AND COMPACTED AGAINST THE FILTER BARRIER.
9. EACH BALE SHALL BE SECURELY ANCHORED AND HELD IN PLACE BY AT LEAST TWO STAKES OR REBAR'S DRIVEN THROUGH THE BALE A MINIMUM OF 2 FEET INTO THE GROUND.
10. LOOSE STRAW SHALL BE WEDGED BETWEEN BALES TO PREVENT WATER FROM ENTERING BETWEEN BALES.
11. HAY BALE BARRIERS SHALL BE INSPECTED IMMEDIATELY AFTER EACH 1/2 INCH RAINFALL AND AT LEAST DAILY DURING PROLONGED RAINFALL.
12. CLOSE ATTENTION SHALL BE PAID TO THE REPAIR OF DAMAGED BALES, END RUNS AND UNDERCUTTING BENEATH BALES.
13. NECESSARY REPAIRS TO BARRIERS OR REPLACEMENT OF BALES SHALL BE ACCOMPLISHED PROMPTLY.
14. SEDIMENT DEPOSITS SHOULD BE REMOVED AFTER EACH RAINFALL. THEY MUST BE REMOVED WHEN THE LEVEL OF DEPOSITION REACHES 1 FOOT OR APPROXIMATELY ONE-HALF THE HEIGHT OF THE BARRIER.
15. ANY SEDIMENT DEPOSITS REMAINING IN PLACE AFTER THE HAY BALE BARRIER IS NO LONGER REQUIRED SHALL BE REMOVED. THE AREA SHALL BE DRESSED TO CONFORM TO THE FINISH GRADE, PREPARED AND SEEDED.
16. ALL FILTER BARRIERS SHALL BE INSPECTED IMMEDIATELY AFTER EACH RAINFALL AND AT LEAST DAILY DURING PROLONGED RAINFALL. ANY REQUIRED REPAIRS SHALL BE MADE IMMEDIATELY.
17. SHOULD THE FABRIC ON A FILTER BARRIER DECOMPOSE OR BECOME INEFFECTIVE PRIOR TO THE END OF THE PROJECT THE SILT FENCE OR FILTER BARRIER SHALL BE REPLACED PROMPTLY.
18. THE STRUCTURE SHALL BE INSPECTED AFTER EACH RAIN AND REPAIRS MADE AS NEEDED.
19. SEDIMENT SHALL BE REMOVED AND THE TRAP RESTORED TO ITS ORIGINAL DIMENSIONS WHEN THE SEDIMENT HAS ACCUMULATED TO ONE INCH IN ADDITION TO THE REQUIREMENTS SHOWN HERE.
20. THE CONTRACTOR IS RESPONSIBLE FOR THE BEST EROSION AND SEDIMENT CONTROL PRACTICES AS OUTLINED IN THE PLANS, SPECIFICATIONS AND THE ENVIRONMENTAL MANAGEMENT PLAN (E.M.P.) IN THE ENVIRONMENTAL IMPACT ANALYSIS (E.I.A.) FOR THIS PROJECT.
21. EROSION AND SEDIMENT CONTROL BARRIERS SHALL BE PLACED ADJACENT TO ALL WATER BODIES AND WETLAND AREAS, WITHIN 200 FT. OF THE CONSTRUCTION LIMITS AND FARTHER WHERE THERE IS POTENTIAL FOR DOWNSTREAM WATER QUALITY DEGRADATION.
22. ALL DISTURBED AREAS THAT WILL REMAIN UNPAVED SHALL BE GRASSED, FERTILIZED, MULCHED AND MAINTAINED UNTIL COMPLETION OF THE PROJECT (UNTIL FURTHER VEGETATIVE COVER IS ESTABLISHED FOR AREAS TO RECEIVE FURTHER LANDSCAPING).
23. ALL DISCHARGE FROM DE WATERING ACTIVITY SHALL BE FILTERED AND CONVEYED TO THE SEWER SYSTEM IN A MANNER WHICH PREVENTS EROSION AND TRANSPORTATION OF SUSPENDED SOLIDS TO THE RECEIVING OUTFALL.
24. ALL GRASSED FILL SLOPES 4:1 OR STEEPER TO RECEIVE OVERLAPPED (SHINGLE STYLE) SOLID SOD WITH EACH PIECE INDIVIDUALLY STAKED OR PINNED. OVERLAPPING SHALL BE A MINIMUM OF 5".
25. ALL TEMPORARY, EROSION, AND SEDIMENT CONTROL TO REMAIN IN PLACE UNTIL COMPLETION OF CONSTRUCTION.
26. IN ADDITION TO THE MINIMUM EROSION AND SEDIMENT CONTROL MEASURES SHOWN ON THE PLANS THE CONTRACTOR SHALL BE RESPONSIBLE FOR MEETING ALL APPLICABLE RULES, REGULATIONS AND WATER QUALITY GUIDELINES AND SHALL UTILIZE ALL ADDITIONAL CONTROLS NECESSARY FOR COMPLIANCE.
27. ALL EXCAVATIONS AND EARTHWORK SHALL BE DONE IN A MANNER TO MINIMIZE WATER TURBIDITY AND POLLUTION. DISCHARGE SHALL BE CONTROLLED AND REROUTED THROUGH HAY FILTERS, SILTATION DIAPERS, SUMPS AND POLISHING PONDS. THE CONTRACTOR SHALL BE RESPONSIBLE FOR THE PREVENTION, CORRECTION, CONTROL AND ABATEMENT OF EROSION AND WATER POLLUTION IN ACCORDANCE WITH THE REQUIREMENTS OF THE BAHAMAS AND THE ENVIRONMENTAL MANAGEMENT PLAN AND ENVIRONMENTAL IMPACTS ASSESSMENT FOR THIS PROJECT.
28. THE CONTRACTOR SHALL BE RESPONSIBLE FOR THE REMOVAL OF ANY SEDIMENT THAT LEAVES THE SITE AND CHANGES ANY DOWNSTREAM CONDITIONS BY RAISING CHANNEL BOTTOMS AND/OR CLOGGING OUTFALL CULVERTS.
29. THE CONTRACTOR SHALL PAY FOR ANY WATER QUALITY CONTROL VIOLATIONS FROM ANY AGENCY THAT RESULTS IN FINES BEING ASSESSED TO THE OWNER BECAUSE OF THE CONTRACTOR'S FAILURE TO ELIMINATE TURBID RUNOFF FROM LEAVING THE SITE AND RAISING TURBIDITY LEVELS ABOVE EXISTING BACKGROUND LEVEL.

EROSION AND SEDIMENT CONTROL GENERAL NOTE:

THE ATTACHED BEST MANAGEMENT PRACTICES (BMP'S) DETAILS AND SPECIFICATIONS ARE ONLY A SUGGESTED APPROACH DEVELOPED FOR USE BY THE OWNER/CONTRACTOR TO ASSIST THEM IN IMPLEMENTING APPROPRIATE POLLUTION PREVENTION TECHNIQUES.

IT IS THE CONTRACTOR'S RESPONSIBILITY TO DETERMINE AND IMPLEMENT THE BEST MANAGEMENT PRACTICES THAT ARE APPROPRIATE FOR THE PROJECT'S SITE SPECIFIC CONDITIONS DURING THE LIFE OF THE CONSTRUCTION ACTIVITIES.

CONTRACTOR SHALL SUBMIT A EROSION AND SEDIMENT CONTROL PLAN FOR APPROVAL BY THE CITY PRIOR TO BEGINNING CONSTRUCTION

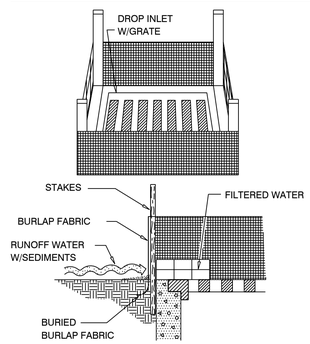

SPECIFIC APPLICATION

THIS METHOD OF INLET PROTECTION IS APPLICABLE WHERE THE INLET DRAINS A RELATIVELY FLAT NON PAVED AREA (SLOPES NO GREATER THAN 5%) WHERE SHEET OR OVERLAND FLOWS (NOT EXCEEDING 0.5 CFS) ARE TYPICAL. THE METHOD SHALL NOT APPLY TO INLETS RECEIVING CONCENTRATED FLOWS, SUCH AS ALONG ROADWAYS.

1 C-24 Drop Inlet Sediment Filter

NTS

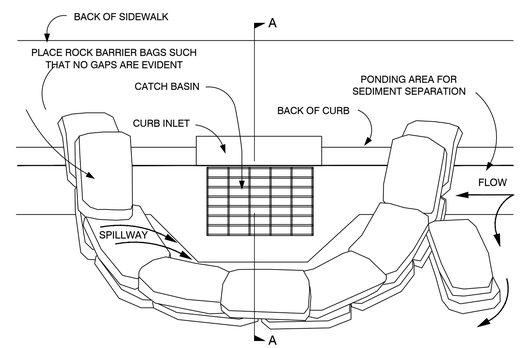

PLAN VIEW

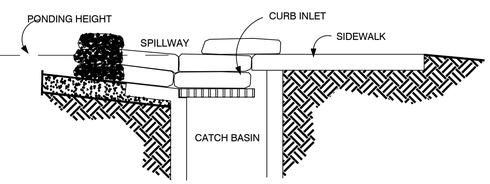

SECTION A-A

NOTES:

1. ALL ROCK BAG BARRIERS MUST AGREE WITH THE NOTES ON PREVIOUS PAGE.
2. PLACE CURB TYPE ROCK BAG BARRIER ON GENTLY SLOPING STREET, WHERE WATER CAN POND AND ALLOW SEDIMENT TO SEPARATE FROM RUNNOFF.
3. BAGS OF WOVEN GEOTEXTILE FABRIC, FILLED WITH GRAVEL MUST BE LAYERED SUCH THAT NO GAPS ARE EVIDENT.
4. LEAVE ONE SANDBAG GAP IN THE TOP ROW ON THE SIDE AWAY FROM FLOW, TO PROVIDE A SPILLWAY; OR IN THE CENTER IF PONDING IS NEEDED ON BOTH SIDES.
5. INSPECT BARRIERS AND REMOVE SEDIMENT AFTER EACH STORM EVENT, SEDIMENT AND GRAVEL MUST BE REMOVED FROM THE TRAVELED WAY IMMEDIATELY

2 C-24 Silt Rock Bag Curb Inlet Filter

NTS

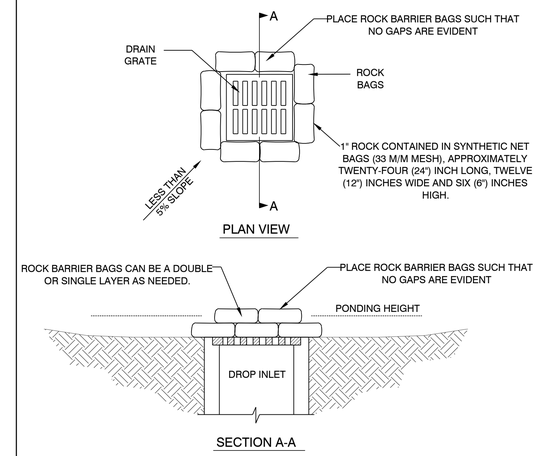

PLAN VIEW

SECTION A-A

NOTES:

1. DROP INLET SEDIMENT BARRIERS ARE TO BE USED FOR SMALL, NEARLY LEVEL DRAINAGE AREAS. (LESS THAN 5%.)
2. A "REASONABLE" DESIGN SIZE PARTICLE TO CAPTURE MUST BE SELECTED.
3. SIZE DISTRIBUTION OF UPSTREAM SOIL PARTICLES MUST BE EVALUATED.
4. INFLOW AND OUTFLOW FROM THE SYSTEM FOR A SPECIFIC FREQUENCY STORM MUST BE KNOWN.
5. POND VOLUME IS DIRECTLY PROPORTIONAL TO THE DISCHARGE RATE OF WATER FROM THE SYSTEM.
6. POND VOLUME IS INVERSELY PROPORTIONAL TO THE MASS OF THE DESIGN SIZE SUSPENDED PARTICLE.
7. A SYSTEM MUST PROVIDE SUFFICIENT FLOW TO ALLOW FOR DEPOSITION OF DESIGN SIZE PARTICLES.
8. THE PONDING HEIGHT MUST BE WELL BELOW THE GROUND ELEVATION DOWNSLOPE TO PREVENT RUNNOFF FROM BYPASSING THE INLET. A TEMPORARY DIKE MAY BE NECESSARY ON THE DOWNSLOPE SIDE OF THE STRUCTURE.

3 C-24 Silt Rock Bag Drop Inlet Filter

NTS

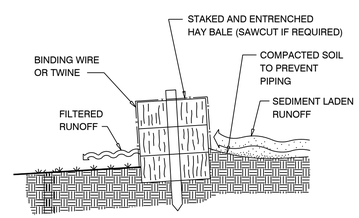

CROSS-SECTION OF A PROPERLY INSTALLED HAY BALE

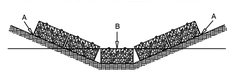

POINTS 'A' SHOULD BE HIGHER THAN POINT 'B'

PROPER PLACEMENT OF HAY BALE BARRIER IN DRAINAGE WAY

NOTES:
1. EXCAVATE THE TRENCH
2. PLACE AND STAKE HAY BALES
3. WEDGE LOOSE STRAW BETWEEN BALES
4. BACK FILL AND COMPACT THE EXCAVATED SOIL

4 C-24 Hay Bale Barrier

NTS

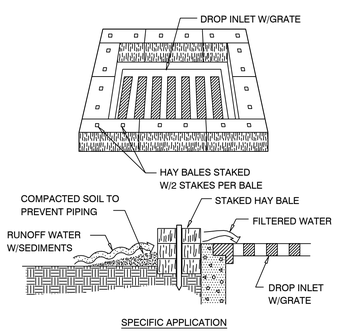

SPECIFIC APPLICATION

THIS METHOD OF INLET PROTECTION IS APPLICABLE WHERE THE INLET DRAINS A RELATIVELY FLAT AREA (SLOPES NO GREATER THAN 5%) WHERE SHEET OR OVERLAND FLOWS (NOT EXCEEDING 0.5 CFS) ARE TYPICAL. THE METHOD SHALL NOT APPLY TO INLETS RECEIVING CONCENTRATED FLOWS, SUCH AS ALONG ROADWAYS

5 C-24 Hay Bale Drop Inlet Filter

NTS

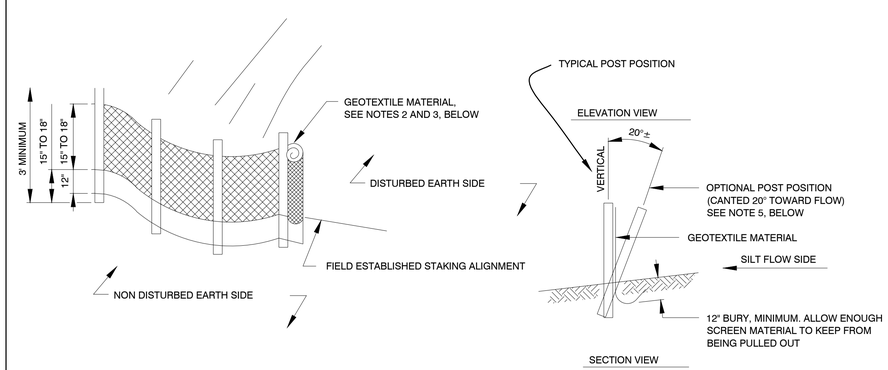

NOTES:
1. POST: 2"X2" WOOD, P.T. OR 2-1/2"Ø STEEL AT 6' CENTERS, MAXIMUM.
2. GEOTEXTILE: GRAB TENSILE AT 90 LBS, TRAPEZOIDAL TEAR AT 35 LBS., MULLEN BURST AT 180 PSI.
3. GEOTEXTILE MATERIAL SHALL BE BURIED IN THE GROUND A MINIMUM OF 12" AND BACK FILLED.
4. ALSO SEE FDOT INDEX 199, "GEOTEXTILE CRITERIA", EROSION CLASS.
5. OPTIONAL POST POSITION REQUIRED WHEN SLOPE IS GREATER THAN 1:2.

6 C-24 Staked Silt Barrier Detail

NTS

CIVIL ENGINEERING • REGULATORY PERMITTING • CONSTRUCTION MANAGEMENT
KEY WEST OFFICE
1010 EAST KENNEDY DRIVE, SUITE 400
KEY WEST, FLORIDA 33040
TEL: (305) 293-9440 FAX: (305) 296-0243
TAMPA OFFICE
CONGRESS CENTER
3507 EAST FRONTAGE ROAD, SUITE 140
TAMPA, FLORIDA 33607
TEL: (813) 572-1515 FAX: (813) 288-0710
PEREZ ENGINEERING & DEVELOPMENT, INC
CERTIFICATE OF AUTHORIZATION No. 8579
ALLEN E. PEREZ, P.E.
Florida P.E. NO. 51468

August 7, 2012

ORIGINAL: SEPTEMBER 2012
REVISIONS: 1 2 3 4 5 6

EAST FRONT ST. FLOOD MITIGATION PROJECT

NPDES DETAILS

CITY OF KEY WEST
3121 FLAGLER AVE.
KEY WEST, FL 33040

JOB NO. 121001
DRAWN RTM
DESIGNED AEP
CHECKED AEP
QC
SHEET C-13

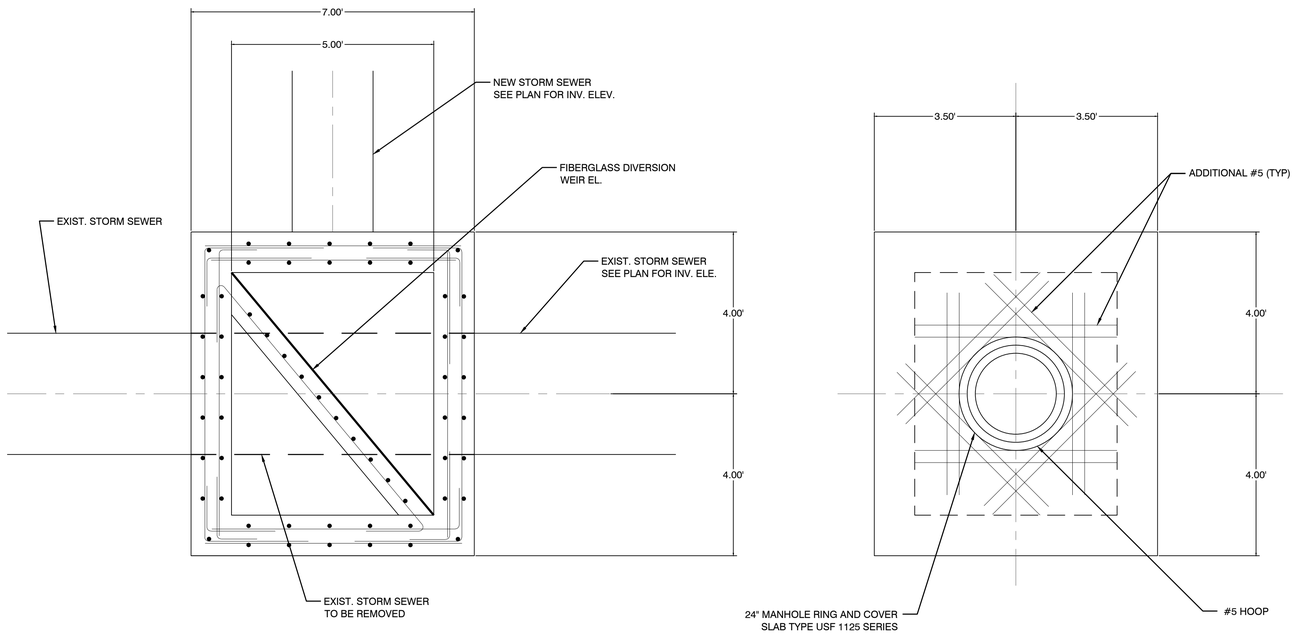

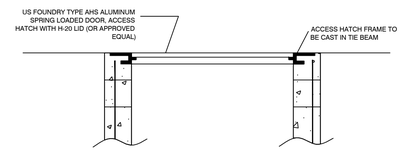

2 C-23 Valve Box Structure Access Hatch Detail
NTS

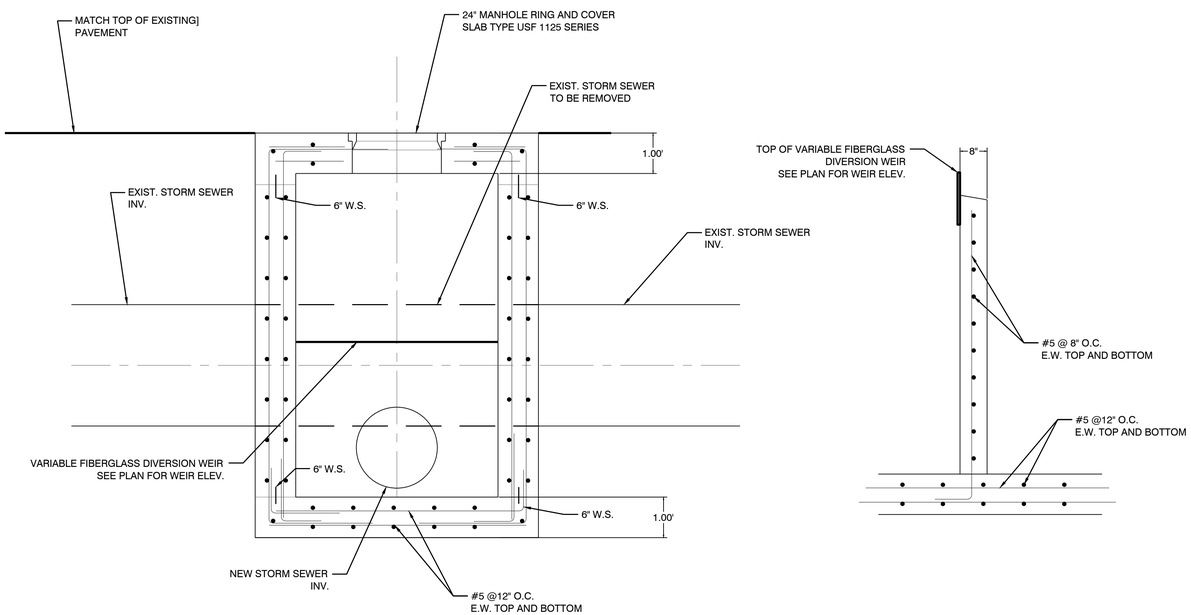

1 C-23 Diversion Structure Detail
NTS

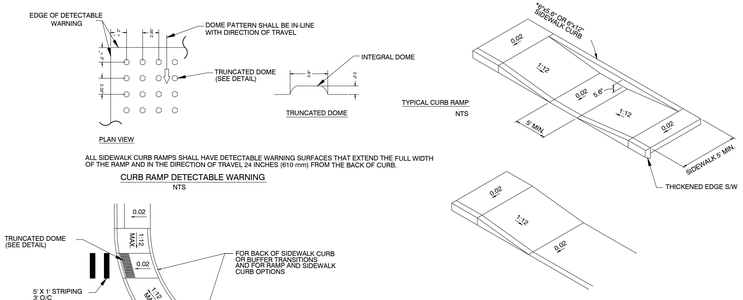

ALL SIDEWALK CURB RAMPS SHALL HAVE DETECTABLE WARNING SURFACES THAT EXTEND THE FULL WIDTH OF THE RAMP AND IN THE DIRECTION OF TRAVEL 24 INCHES (610 mm) FROM THE BACK OF CURB.

CURB RAMP DETECTABLE WARNING
NTS

TYPICAL CURB RAMP
NTS

TYPICAL S/W TO DRIVEWAY TRANSITION
NTS

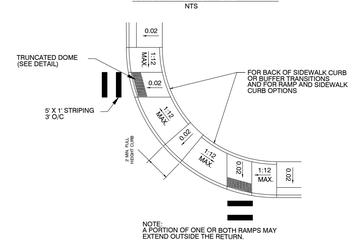

NOTE:
A PORTION OF ONE OR BOTH RAMPS MAY
EXTEND OUTSIDE THE RETURN.

TYPICAL PLACEMENT OF SIDEWALK
CURB RAMPS AT CURBED RETURNS
NTS

3 C-23 Sidewalk Transition Detail
NTS

GENERAL NOTE:

1. CURB RAMP RUNNING SLOPES AT UNRESTRAINED SITES SHALL NOT BE STEEPER THAN 1:12 AND CROSS SLOPE SHALL BE 0.02 OR FLATTER. TRANSITION SLOPES SHALL NOT BE STEEPER THAN 1:20.

2. CURB RAMP DETECTABLE WARNING SURFACES SHALL EXTEND THE FULL WIDTH OF THE RAMP AND IN THE DIRECTION OF TRAVEL 24" FROM THE BACK OF CURB. DETECTABLE WARNING SURFACES SHALL BE CONSTRUCTED BY TEXTURING A TRUNCATED DOME PATTERN IN CONFORMANCE WITH U.S. DEPARTMENT OF JUSTICE A.D.A. STANDARDS FOR ACCESSIBLE DESIGN, A.D.A. ACCESSIBILITY GUIDELINES, SECTION 4.29.2. TRANSITION SLOPES ARE NOT TO HAVE DETECTABLE WARNINGS.

3. UNLESS OTHERWISE CALLED OUT IN THE PLANS, THE RAMP DETECTABLE WARNING SURFACE SHALL BE COLORED IN ACCORDANCE WITH FDOT SECTION 351 OF THE STANDARD SPECIFICATIONS.

4. WHERE A CURB RAMP IS CONSTRUCTED WITHIN EXISTING CURB, CURB AND GUTTER AND/OR SIDEWALK, THE EXISTING CURB OR CURB AND GUTTER SHALL BE REMOVED TO THE NEAREST JOINT BEYOND THE CURB TRANSITIONS OR OR TO THE EXTENT THAT NO REMAINING SECTION OF CURB OR CURB AND GUTTER IS LESS THAN 5' LONG. THE EXISTING SIDEWALK SHALL BE REMOVED TO THE NEAREST JOINT BEYOND THE TRANSITION SLOPE OR WALK AROUND OR TO THE EXTENT THAT NO REMAINING SECTION OF SIDEWALK IS LESS THAN 5' LONG.

DESIGN NOTE:

1. THE COLOR REQUIREMENT IN GENERAL NOTE 3 IS TO PROVIDE A DARK-ON-LIGHT VISUAL CONTRAST BETWEEN THE DETECTABLE WARNING SURFACE AND THE ADJACENT WALKING SURFACE. WHERE ADJACENT WALKING SURFACES ARE COLORED OR ARE CONSTRUCTED WITH MATERIALS OTHER THAN STANDARD CLASS I PORTLAND CEMENT CONCRETE IN ACCORDANCE WITH SECTION 522 OF THE STANDARD SPECIFICATIONS, THE PLANS MUST PROVIDE FOR DETECTABLE WARNING SURFACE COLOR OR MATERIALS THAT PROVIDE THE NECESSARY CONTRAST, EITHER DARK-ON-LIGHT OR LIGHT-ON-DARK.

CIVIL ENGINEERING • REGULATORY PERMITTING • CONSTRUCTION MANAGEMENT
KEY WEST OFFICE
1010 EAST KENNEDY DRIVE, SUITE 400
KEY WEST, FLORIDA 33040
TEL: (305) 293-9440 FAX: (305) 296-0243
TAMPA OFFICE
CONCOURSE CENTER
3507 EAST FRONTAGE ROAD, SUITE 140
TAMPA, FLORIDA 33607
TEL: (813) 579-1016 FAX: (813) 289-0710
PEREZ ENGINEERING & DEVELOPMENT, INC
CERTIFICATE OF AUTHORIZATION No. 8979
ALLEN E. PEREZ, P.E.
Florida P.E. NO. 51468
August 7, 2012

ORIGINAL: SEPTEMBER 2012

REVISIONS:
1
2
3
4
5
6

EAST FRONT ST. FLOOD MITIGATION PROJECT

CITY OF KEY WEST
3121 FLAGLER AVE.
KEY WEST, FL 33040

CIVIL DETAILS

JOB NO. 121001
DRAWN RTM
DESIGNED AEP
CHECKED AEP
QC
SHEET C-23

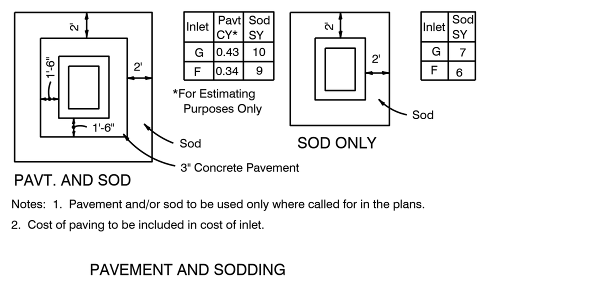

GENERAL NOTES

1. These inlets are designed for use in ditches, medians, pavement areas, or other areas subject to heavy wheel loads where debris is minimal and is subject to pedestrian and/or bicycle traffic.

2. When alternate G grate is specified in plans, the grate is to be hot dipped galvanized after fabrication.

3. These inlets may be used with Alt. B structure bottoms, Index 200. The inlet and bottom combinations are to be paid for under the contract unit price for inlets (DT Bot) (Type F (or G)) (J Bot, Depth), Ea.

4. Inlets are to include an Envrionmental Awarness Message via a Duracast Storm Drain Marker (or approved equal). Cost for marker to be included in unit price for Inlet.

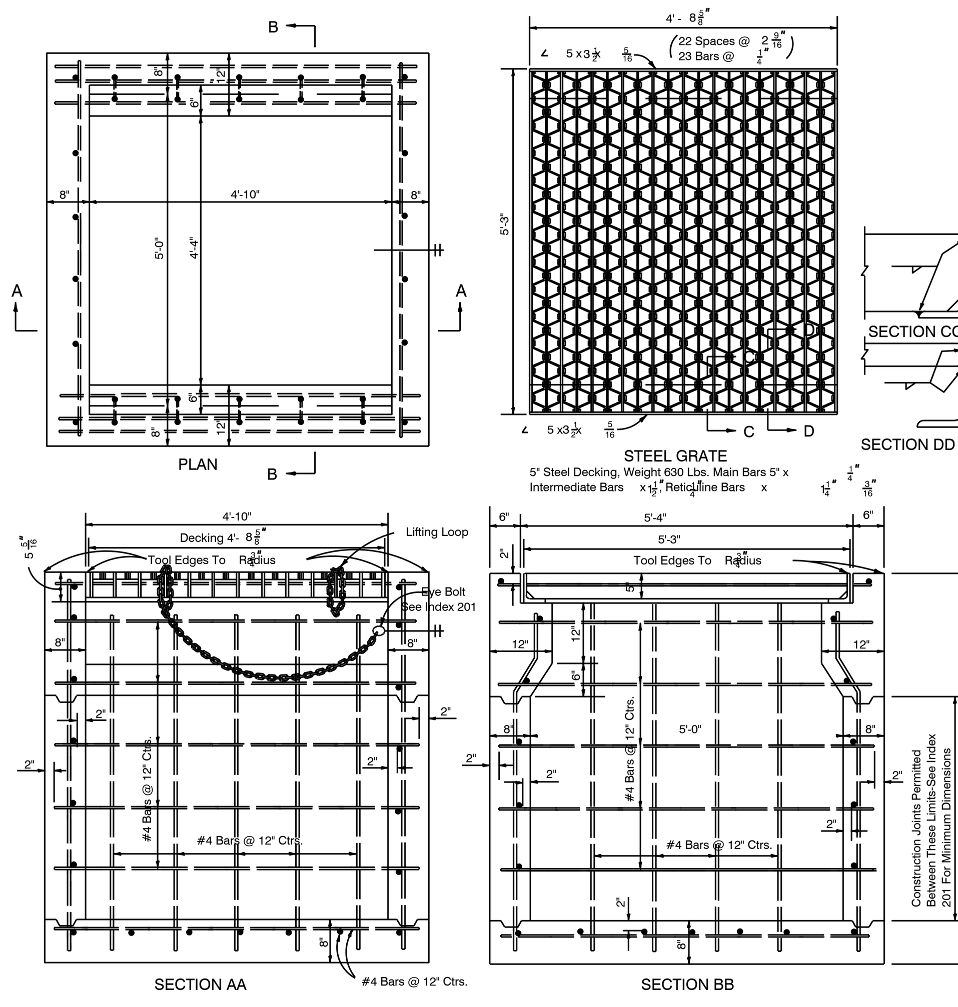

TYPE G

1 C-22 FDOT Ditch Bottom Inlet Type "G"
NTS

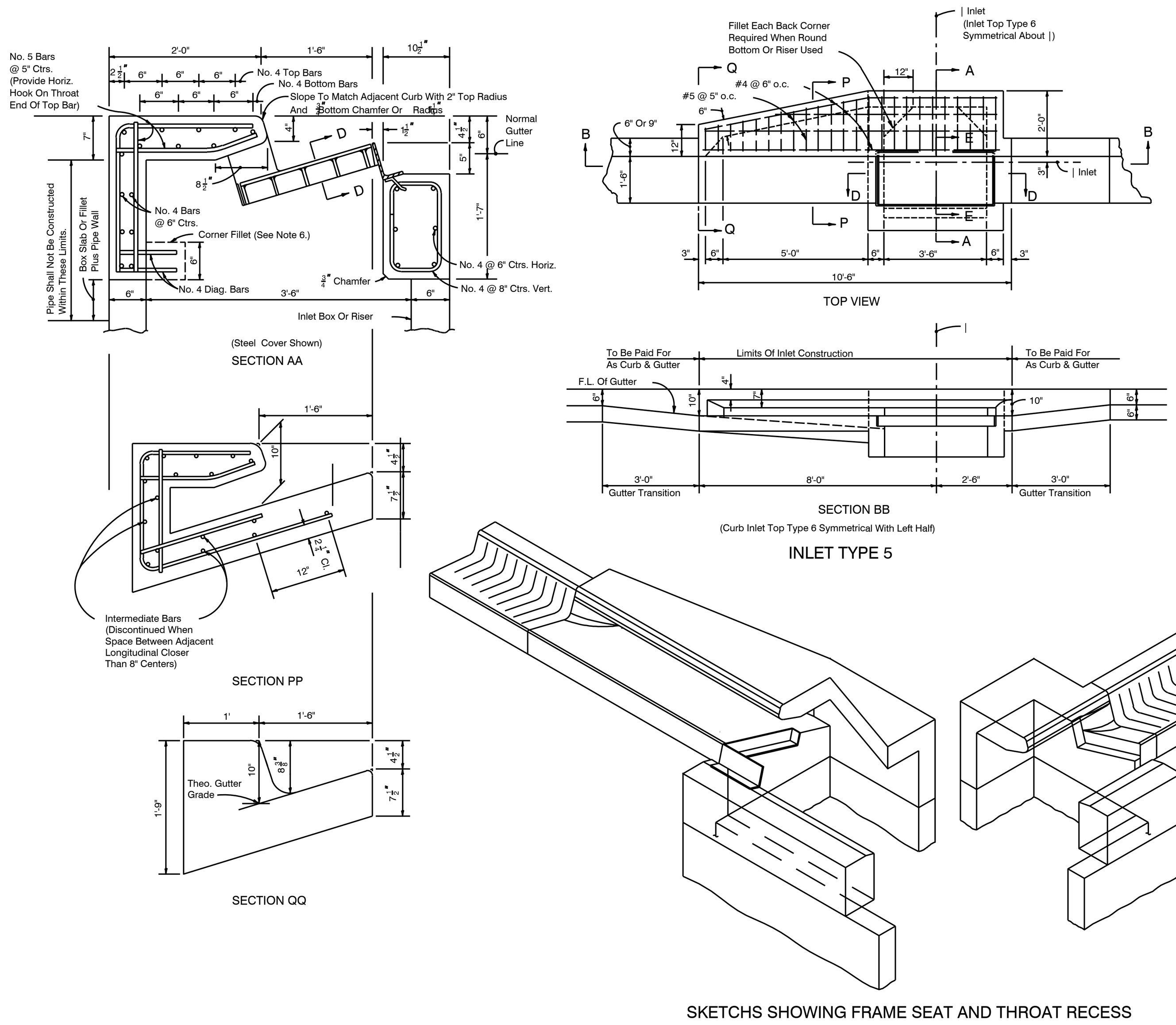

GENERAL NOTES

1. The finished grade and slope of the inlet tops are to conform with the finished cross slope and grade of the proposed sidewalk and/or parkway.
2. When inlets are to be constructed on a curve, refer to the plans to determine the radius and, where necessary, modify the inlet details accordingly. Bend steel when necessary.
3. All reinforcing steel shall have minimum $\frac{1}{2}$" cover unless otherwise shown. Inlet tops shall be either cast-in-place or precast concrete.
4. Precasting of this inlet top will be permitted. Precast units shall conform to the dimensions shown or in accordance with approved shop drawings. Request for shop drawing approval shall be directed to the State Drainage Engineer.
5. Concrete meeting the requirements of A.S.T.M. C 478 (4,000 P.S.I.) may be used in lieu of Class ~ concrete for precast units, manufactured in plants which are under the Standard Operating Procedures for the inspection of precast drainage products.
6. The corner fillets shown for rectangular throats are necessary only when throats are to be used in conjunction with circular inlet bottoms or when used on skew with rectangular inlet boxes.
7. For inlet bottoms see Index No. 200.
8. These inlet tops are designed for use with standard curb and gutter Type E and Type F. Locate outside of pedestrian crosswalk where practical.
9. See Index 201 for supplemental details.
10. All steel used for frame and cover shall meet the requirements of ASTM A-36.
11. Either cast iron covers or steel covers may be used. Iron covers shall be Class No. 30 castings in accordance with ASTM A-48.
12. When Alternate "G" Cover is specified in plans either the cast iron cover and galvanized steel frame or the the galvanized steel cover and frame must be used. Covers are to be grouted in accordance with the grouting detail shown on sheet 2 of 2, in lieu of tack welding.
13. Inlet to be paid for under the contract unit price for Inlets , ___
14. Inlets are to include a Environmental Awarness Message via a Duracast Storm Drain Marker (or approved equal), Cost for marker to be included in unit price for Inlet.

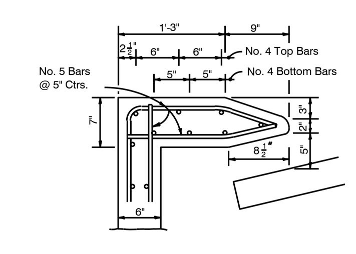

TOP MODIFICATION FOR TYPE E CURB

SKETCHS SHOWING FRAME SEAT AND THROAT RECESS

2 C-22 FDOT Curb Inlet Type "5 & 6"
NTS

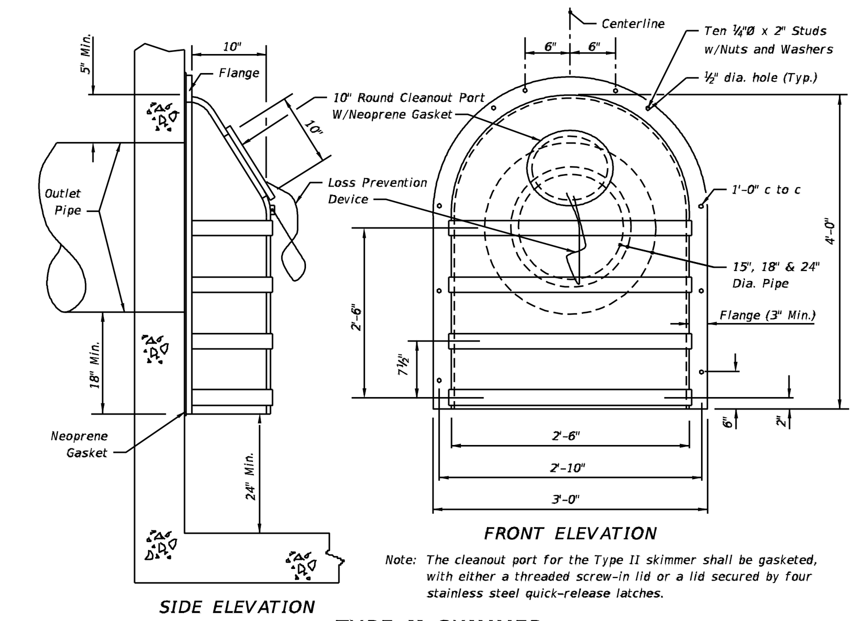

Note: The cleanout port for the Type II skimmer shall be gasketed, with either a threaded screw-in lid or a lid secured by four stainless steel quick-release latches.

SIDE ELEVATION — *FRONT ELEVATION*

TYPE II SKIMMER

GENERAL NOTES

1. The Frenchdrain Skimmer is a hooded cover, mounted over an outlet in a catchbasin, that prevents oil and floating debris from exiting the basin. Use this skimmer in Frenchdrain Catchbasins and in other locations where there is a need to prevent oil, debris or other floating contaminants from exiting Catchbasins through outlet pipes.

2. Place neoprene gasket material between the skimmer and the catchbasin at all points of contact. Trim the gasket neatly to extend ½ inch beyond the joint on all sides.

3. Skimmer baffle, cleanout pipe and angles shall be primarily constructed of either galvanized steel, aluminum, polyvinyl chloride, polyethylene, fiberglass or acrylonitrite butadiene styrene. All steel components, other than stainless, shall be hot-dip galvanized.

4. Mounting hardware, hinges and latches shall all be stainless steel. Loss prevention device shall be either stainless steel chain or riveted nylon strap.

5. Material used in construction of skimmer bodies (baffles) and cleanout pipe shall comply with Standard Specification 943 for steel, 945 for aluminum or 948 for plastics.

6. All costs for furnishing and installing a frenchdrain skimmer shall be included in the cost of the basin in which it is installed. Retrofit skimmers shall be paid for as 'modify existing structure'.

7. Plastic Skimmers shall contain a minimum of 1.5% by weight of carbon black for UV protection.

DESIGN NOTES

1. The contractor may submit an alternative design prefabricated Frenchdrain Skimmer for approval by the Engineer.

2. Show, in the plans, the location of the basin and indicate the interior side(s) of the basin on which a skimmer will be installed.

3. Type I Skimmer dimensions shall be based on the outlet pipe diameter as shown in the dimension table.

4. Type II Skimmers are to be used only with outlet pipe diameters of 15", 18", and 24".

2 C-22 Skimmers for Exfiltration Trench Structures
NTS

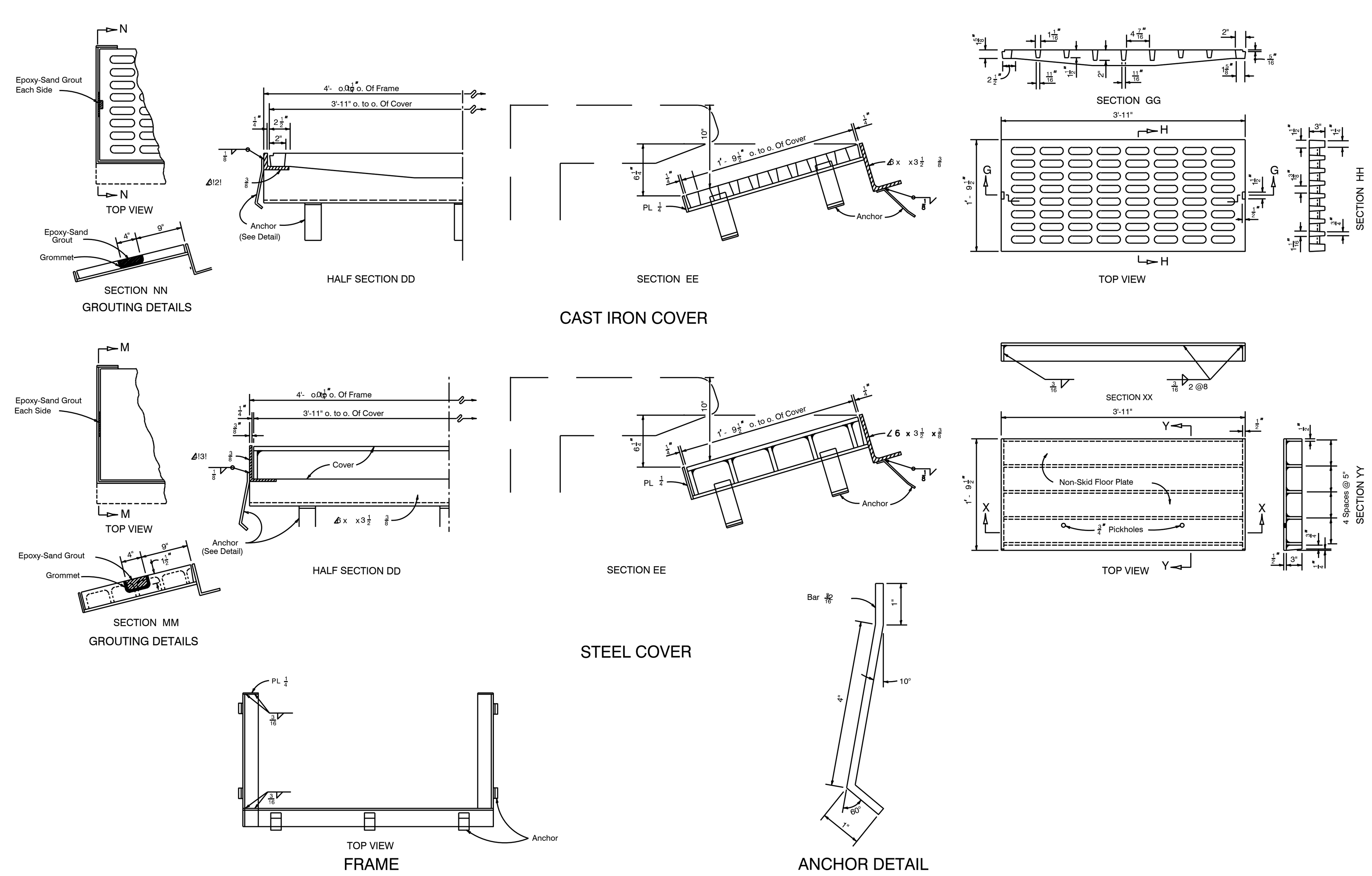

CAST IRON COVER

STEEL COVER

FRAME

ANCHOR DETAIL

4 C-22 FDOT Curb Inlet Type "5 & 6"
NTS

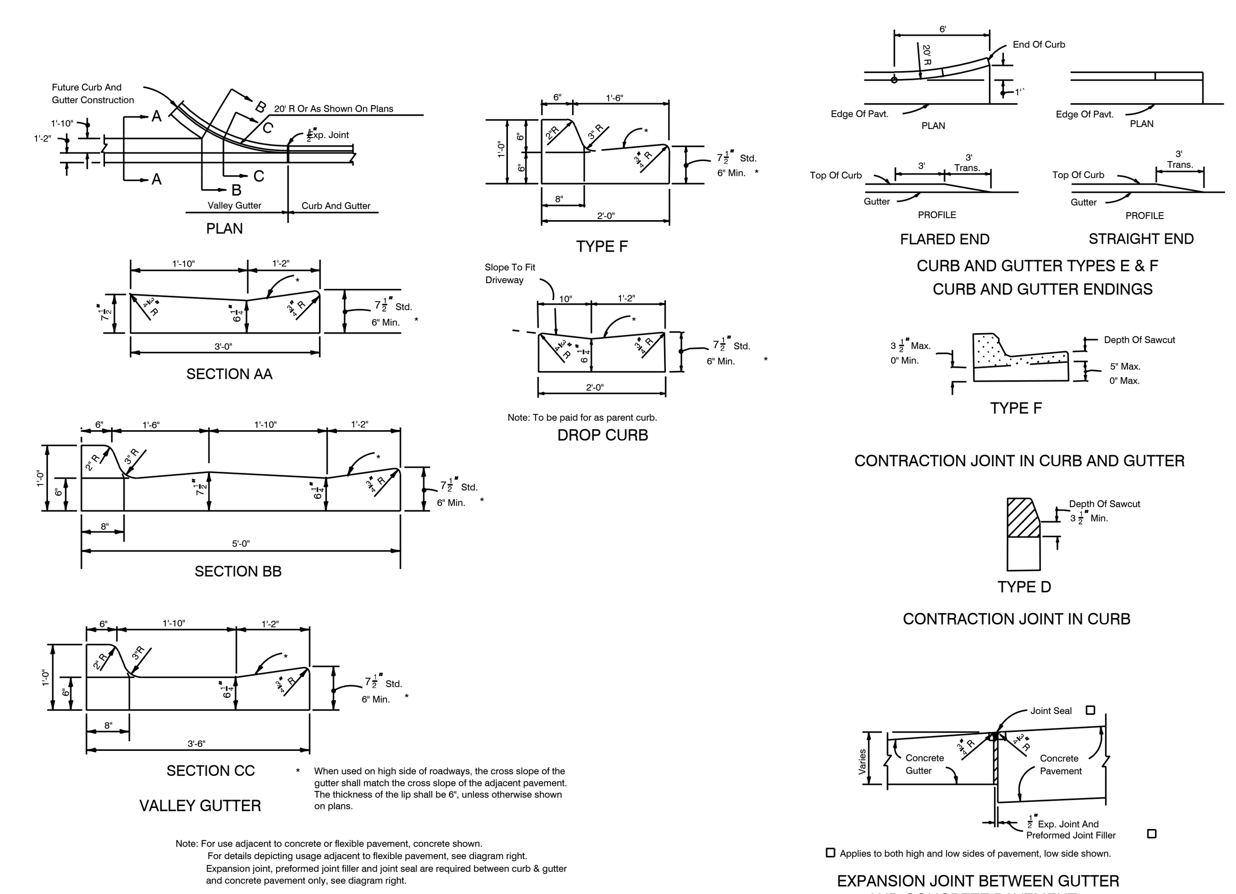

Note: For use adjacent to concrete or flexible pavement, concrete shown. Expansion joint, preformed joint filler and joint seal are required between curbs and concrete pavement only, see diagram right.

CONCRETE CURB

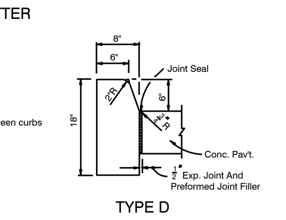

TYPE D

GENERAL NOTES

1. For curb,gutter,and curb and gutter provide $\frac{1}{8}$" - $\frac{1}{4}$" contraction joints at 10' centers (max.). Contraction joints adjacent to concrete pavement on tangents and flat curves are to match the pavement joints, with intermediate joints not to exceed 10' centers. Curb,gutter and curb & gutter expansion joints shall be located in accordance with Section 520 of the standard specifications.

2. Ends of Curbs Types B and D shall transition from full to zero heights in 3 feet.

5 C-22 Curb & Curb and Gutter Detail
NTS

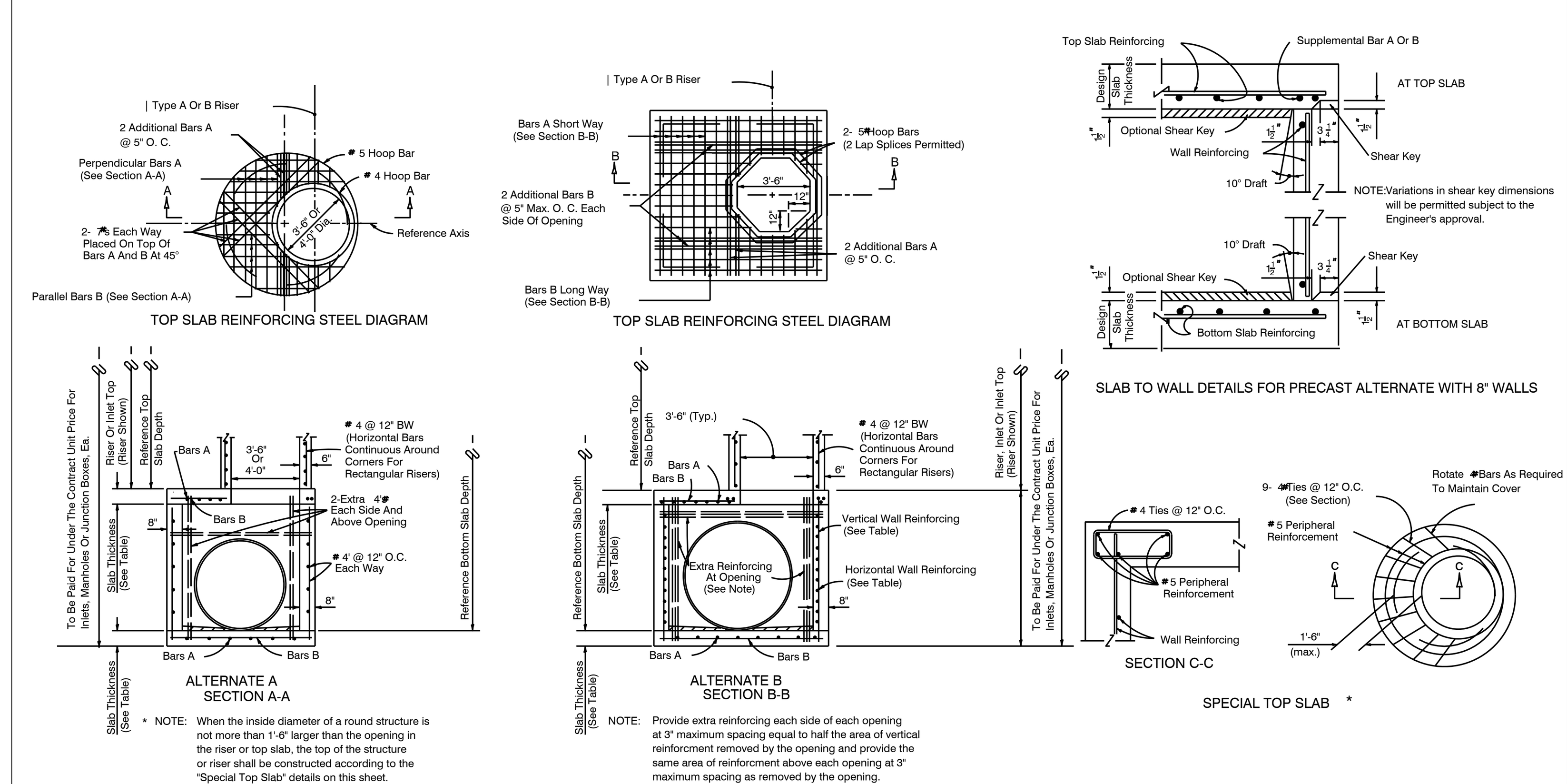

GENERAL NOTES

1. Standard structure bottoms 4'-0" diameter and smaller (Alt. A) and 3'-6" square (Alt. B) are designated Type P. Larger standard structure bottoms are designated Type J. Risers are permitted for all structures.

2. Walls of circular structures (Alternate A) constructed in place may be of non-reinforced concrete or brick or reinforced concrete. Precast and rectangular structures (Alternate B) shall be constructed of reinforced concrete only.

3. Wall thickness and reinforcement are for either reinforced cast-in-place or precast concrete units except that precast circular units may be furnished with walls in accordance with either A.S.T.M. C-478 (up to 96" diameter) or A.S.T.M. C-76, Class ~~~, B Wall, modified where the elliptical steel cage area is placed in the center one-third of the wall.

4. Top and floor slab thickness and reinforcement are for precast and cast in place construction. Top and floor slabs shall be of Class ~~ concrete. Concrete as specified in A.S.T.M. C-478 (4000 psi) may be used in lieu of Class ~ and Class ~~ concrete in precast items manufactured in plants which are under the 'Standard Operating Procedures' for the inspection of precast drainage products.

5. All reinforcement shall be A.S.T.M. A615, Grade 60 or 65 KSI welded wire fabric, either smooth or deformed.

6. Structure bottoms may be used in conjunction with curb inlet tops Types 1, 2, 3, 4, 5, 6, 9, and 10, and any manhole or junction box unless otherwise shown in the plans or other standard drawings. Alt. B structure bottoms may be used in conjunction with curb inlet Types 7 & 8, or any ditch bottom inlet unless otherwise shown in the plans or other standard drawings.

7. Rectangular structures may be rotated as directed by the Engineer in order to facilitate connections between the structure walls and storm sewer pipes.

8. Except when ACI hooks are specifically required, reinforcement top and slab shall be straight embedment.

9. All steel bars shall have minimum $\frac{1}{2}$" cover unless otherwise shown except for precast circular units manufactured under ASTM C-76 or ASTM C-478, Horizontal steel in rectangular structures shall be lapped a minimum of 24 bar diameters at corners.

10. The corner fillets shown are necessary for rectangular structures used with circular risers and inlet throats and used on skew with rectangular risers, inlet and inlet throats. Fillets will be required in lieu of the bottom slab of the Alt. B riser when used with the Alt. A box. Each fillet shall be reinforced with 2-#5 bars.

11. Inlet throats, riser or manhole tops shall be secured to structures as shown on Index No. 201.

12. Structures with depths over 14' are to be checked for floatation by designer of project drainage.

13. Units larger than specified standard may be substituted at the contractor's option when these units will not cause or increase the severity of utility conflicts. Such larger units shall be furnished at no additional cost to the Department. Larger Alternate A units cannot replace Alternate B units without approval of the Engineer. This note applies to this Index only.

14. For manhole and junction box tops, for frames and covers, and, for supplementary details see Index No. 201.

6 C-22 FDOT Structure Bottoms Type "J" & "P"
NTS

CIVIL ENGINEERING • REGULATORY PERMITTING • CONSTRUCTION MANAGEMENT

PEREZ ENGINEERING & DEVELOPMENT, INC
CERTIFICATE OF AUTHORIZATION NO. 8579

KEY WEST OFFICE
1010 EAST KENNEDY DRIVE, SUITE 400
KEY WEST, FLORIDA 33040
TEL: (305) 293-9440 FAX: (305) 296-0243

TAMPA OFFICE
CONCOURSE CENTER
3507 EAST FRONTAGE ROAD, SUITE 140
TAMPA, FLORIDA 33607
TEL: (813) 579-1616 FAX: (813) 288-0710

ALLEN E. PEREZ, P.E.
Florida P.E. NO. 51468
August 7, 2012

ORIGINAL: SEPTEMBER 2012

REVISIONS:
1
2
3
4
5
6

EAST FRONT ST. FLOOD MITIGATION PROJECT

CIVIL DETAILS

CITY OF KEY WEST
3121 FLAGLER AVE.
KEY WEST, FL 33040

JOB NO.	121001
DRAWN	RTM
DESIGNED	AEP
CHECKED	AEP
QC	
SHEET	C-22