ADDENDUM NO. 3
TO THE CONTRACT DOCUMENTS
for the construction of the

Date: April 10, 2014
Project No.: 476166

NORTH SIMONTON STORMWATER EMERGENCY OUTFALL

CITY OF KEY WEST
KEY WEST, FLORIDA

To All Planholders and/or Prospective Bidders:

The following changes, additions, and/or deletions are hereby made a part of the Contract Documents for the construction of the North Simonton Stormwater Emergency Outfall dated March 2014 as fully and completely as if the same were fully set forth therein:

SPECIFICATIONS

PART 2 – CONTRACTING FORMS

SECTION 00 41 13, BID FORM

DELETE in its entirety and REPLACE with the attached.

DRAWINGS

1. **ADD** the following drawing:

   Drawing S-02: Structural: Removable Screen Section And Detail

2. **ADD** the following 2 drawings for **REFERENCE ONLY:**

   Drawing ND-4: Pump Station-Structural: Pump Assisted Stormwater Drainage Wells: Duval Street – North: Task Order No. 5-01 dated Jan 2003.

   Drawing ND-5: Pump Station-Structural: Pump Assisted Stormwater Drainage Wells: Duval Street – North: Task Order No. 5-01 dated Jan 2003.

All Bidders shall acknowledge receipt of Addendum No. 3 in the Bid Form. Bids submitted without this acknowledgement will be considered informal.

CH2M HILL

_____

Sean Mc Coy, P.E.

Appended hereto and part of Addendum No. 3:

Section 00 41 13, Bid Form, attached.

Drawing S-02: Structural: Removable Screen Section and Detail, attached.

Drawing ND-4: Pump Station-Structural: Pump Assisted Stormwater Drainage Wells: Duval Street – North: Task Order No. 5-01 dated Jan 2003, attached.

Drawing ND-5: Pump Station-Structural: Pump Assisted Stormwater Drainage Wells: Duval Street – North: Task Order No. 5-01 dated Jan 2003, attached.

END OF ADDENDUM

NOTE TO BIDDER: Use preferably BLACK ink for completing this Bid form.

BID FORM

To: The City of Key West

Address: 3126 Flagler Avenue, Key West, Florida 33040

Project Title: ITB #14-0100/North Simonton Stormwater Emergency Outfall

CH2M HILL Project No.: 476166

City of Key West Project No.: ST 1302

Bidder's person to contact for additional information on this Bid:

Company Name:_____

Contact Name: _____

Telephone: _____

1. BIDDER'S DECLARATION AND UNDERSTANDING

1.1. The undersigned, hereinafter called the Bidder, declares that the only persons or parties interested in this Bid are those named herein, that this Bid is, in all respects, fair and without fraud, that it is made without collusion with any official of the Owner, and that the Bid is made without any connection or collusion with any person submitting another Bid on this Contract.

1.2. The Bidder further declares that he has carefully examined the Contract Documents for the construction of the project, that he has personally inspected the site, that he has satisfied himself as to the quantities involved, including materials and equipment, and conditions of work involved, including the fact that the description of the quantities of work and materials, as included herein, is brief and is intended only to indicate the general nature of the Work and to identify the said quantities with the detailed requirements of the Contract Documents, and that this Bid is made according to the provisions and under the terms of the Contract Documents, which Documents are hereby made a part of this Bid.

1.3. The Bidder further agrees, as evidenced by signing the Bid, that if awarded a Contract, the Florida Trench Safety Act and applicable trench safety standards will be complied with.

©COPYRIGHT 2014 CH2M HILL

2. CONTRACT EXECUTION AND BONDS

2.1. The Bidder agrees that if this Bid is accepted, he will, within 10 days, not including Sundays and legal holidays, after Notice of Award, sign the Contract in the form annexed hereto, and will at that time, deliver to the Owner examples of the Performance Bond and Payment Bond required herein, and evidence of holding required licenses and certificates, and will, to the extent of his Bid, furnish all machinery, tools, apparatus, and other means of construction and do the Work and furnish all the materials necessary to complete all work as specified or indicated in the Contract Documents.

3. CERTIFICATES OF INSURANCE

3.1. Bidder agrees to furnish the Owner, before commencing the Work under this Contract, the certificates of insurance as specified in these Documents.

4. START OF CONSTRUCTION AND CONTRACT COMPLETION TIMES

4.1. The Bidder agrees to begin work within 10 calendar days after the date of the Notice to Proceed and to achieve Substantial Completion within 240 calendar days from the date when the Contract Times commence to run as provided in paragraph 2.03.A of the General Conditions, and Work will be completed and ready for final payment and acceptance in accordance with paragraph 14.07 of the General Conditions within 270 calendar days from the date when the Contract Times commence to run. A second Substantial Completion for the outfall pipe from the 36-inch valve to the outfall structure and the outfall structure is 30 days after start of construction for the outfall pipe and outfall structure. The installation of the 36-inch outfall pipe and outfall structure cannot start until September 1st.

5. LIQUIDATED DAMAGES

5.1. In the event the Bidder is awarded the Contract, Owner and Bidder recognize that time is of the essence of this Agreement and that Owner will suffer financial loss if the Work is not completed within the times specified in paragraph Start of Construction and Contract Completion Times above, plus any extensions thereof allowed in accordance with Article 12 of the General Conditions. Owner and Bidder also recognize the delays, expense, and difficulties involved in proving in a legal or other dispute resolution proceeding the actual loss suffered by Owner if the Work is not completed on time. Accordingly, instead of requiring any such proof, Owner and Bidder agree that as liquidated damages for delay (but not as a penalty) Bidder shall pay Owner $3,000.00 per day for each day that expires after the time specified for each substantial completion.

©COPYRIGHT 2014 CH2M HILL

5.2. After Substantial Completion, if Bidder neglects, refuses, or fails to complete the remaining Work within the Contract Times or any Owner-granted extension thereof, Bidder shall pay Owner $1,000.00 for each day that expires after the time specified in paragraph Start of Construction and Contract Completion Times, above for completion and readiness for final payment. Liquidated damages shall run concurrent.

5.3. Owner will recover such liquidated damages by deducting the amount owed from the final payment or any retainage held by Owner.

6. ADDENDA

6.1. The Bidder hereby acknowledges that he has received Addenda Nos._____, _____, _____, _____, _____, (Bidder shall insert No. of each Addendum received) and agrees that all addenda issued are hereby made part of the Contract Documents, and the Bidder further agrees that his Bid(s) includes all impacts resulting from said addenda.

7. SALES AND USE TAXES

7.1. The Bidder agrees that all federal, state, and local sales and use taxes are included in the stated Bid Prices for the Work. Cash allowances DO NOT include any sales and use tax. Equipment allowance includes taxes as shown in Equipment Suppliers' Bid.

8. PUBLIC ENTITY CRIMES

8.1. "A person or affiliate who has been placed on the convicted vendor list following a conviction for a public entity crime may not submit a bid on a contract to provide any goods or services to a public entity, may not submit a bid on a contract with a public entity for the construction or repair of a public building or public work, may not submit bids on leases of real property to a public entity, may not be awarded or perform work as a contractor, supplier, subcontractor, or consultant under a contract with any public entity and may not transact business with any public entity in excess of the threshold amount provided in Section 287.017, for Category Two for a period of 36 months from the date of being placed on the convicted vendor list."

©COPYRIGHT 2014 CH2M HILL

9. COMBINED UNIT PRICE AND LUMP SUM WORK

9.1. The Bidder further proposes to accept as full payment for the Work proposed herein the amounts computed under the provisions of the Contract Documents. For unit price bid items, the estimate of quantities of work to be done is tabulated in the Proposal and, although stated with as much accuracy as possible, is approximate only and is assumed solely for the basis of calculation upon which the award of Contract shall be made. For lump sum bid items, it is expressly understood that the amounts are independent of the exact quantities involved. The Bidder agrees that the amounts for both unit price and lump sum work represent a true measure of labor and materials required to perform the Work, including all allowances for overhead and profit for each type of work called for in these Contract Documents. The amounts shall be shown in both words and figures. In case of discrepancy, the amount shown in words shall govern.

10. UNIT PRICE SCHEDULE

10.1. Unit prices have been computed in accordance with paragraph 11.03.C of the General Conditions and Section 01 29 00, Payment Procedures, paragraph 1.07.B.

10.2. Bidder acknowledges that estimated quantities are not guaranteed and are solely for the purpose of comparison of Bids, and final payment for all Unit Prices Bid items will be based on actual quantities, determined as provided in the Contract Documents.

11. UNFORESEEN CONDITIONS ALLOWANCE

11.1. Bidder further agrees that the amount shown is an estimated amount to be included in the Total Base Bid for unforeseen conditions and conflicts. Bidder further acknowledges that payment will be based on actual costs as determined in conformance with the Contract Documents and as authorized by Work Change Directive. The Owner will negotiate with the Contractor how each Allowance will be spent prior to performing the work.

12. PERMIT ALLOWANCE

12.1. Bidder further acknowledges that this amount shown is an estimated amount to be included in the Total Base Bid for any Permits required by the City of Key West and any Regulatory Agency Permit(s). Bidder acknowledges that payment will be based on actual cost for the permit(s).

©COPYRIGHT 2014 CH2M HILL

13. KEYS ENERGY SERVICE ALLOWANCE

13.1. Bidder further agrees that the amount shown is an estimated amount to be included in the Total Base Bid to cover payment to Keys Energy Service for electrical service. Bidder further acknowledges that payment will be based on actual amount paid as indicated by appropriate invoice.

14. BID ADD ALTERNATE NO. 1

14.1. Bidder further agrees to provide the amount for the work to provide the Removable Trash Screen; Detail 0551-558; to be located within the existing storm water pump station with all appurtenances necessary. This amount may be added to the Total Base Bid Amount should the City decide to proceed with this add alternate.

Unit Price Bid Schedule					
Item No.	**Description**	**Estimated Quantity**	**Unit**	**Bid Unit Price**	**Extended Bid Unit Price**
1	**General**				
1.1	Performance and Payment Bonds	1	EA		
1.2	Mobilization	1	LS		
1.3	Demobilization	1	LS		
1.4	General and Supplementary Conditions	1	LS		
1.5	MOT	1	LS		
1.6	Certified AutoCAD As-built	1	LS		
1.7	Surveyor	1	LS		
2	**Trench Excavation, Backfill and Storm Pipe**				
2.1	36-inch PVC SDR 51 Storm Pipe				
2.1.1	6 to 8 Feet Deep	300	LF		
3	Dewatering	1	LS		
4	Florida Trench Safety Act Compliance	1	LS		
5	**Pavement**				
5.1	Pavement Removal and Replacement	180	SY		
5.2	Pavement 70 Mils Thermoplastic Stripping	80	LF		

©COPYRIGHT 2014 CH2M HILL

Unit Price Bid Schedule					
Item No.	**Description**	**Estimated Quantity**	**Unit**	**Bid Unit Price**	**Extended Bid Unit Price**
5.3	1-inch Asphalt Milling and 1-inch Asphalt Overlay	600	SY		
6	36-inch Buried V-405 Valves	1	EA		
7	Demolition	1	LS		
8	Emergency Generator with Concrete Platform	1	LS		
9	Outfall Structure at Ocean	1	LS		
				Total of All Extended Bid Unit Prices	$_____

Unforeseen Conditions Allowance $120,000

Permit Allowance $30,000

Keys Energy Allowance $2,000

The Bidder agrees to accept as full payment for the Work proposed under this Project, as herein specified and as shown on the Drawings, the following Total Base Bid amount:

_____Dollars

(Amount written in words has precedence)

and _____Cents **TOTAL BASE BID**$_____

Bid Add Alternate No. 1 $_____

15. SUBCONTRACTORS

15.1. The Bidder further proposes that the following subcontracting firms or businesses will be awarded subcontracts for the following portions of the Work in the event that the Bidder is awarded the Contract:

_____

Name

_____ _____ _____

Street City State Zip

©COPYRIGHT 2014 CH2M HILL

_____
Name

_____ _____ _____
Street City State Zip

_____
Name

_____ _____ _____
Street City State Zip

_____
Name

_____ _____ _____
Street City State Zip

Surety

_____whose address is

_____ _____ _____
Street City State Zip

Bidder

The name of the Bidder submitting this Bid is _____

_____ doing business at

_____ _____ _____
Street City State Zip

which is the address to which all communications concerned with this Bid and with the Contract shall be sent.

The names of the principal officers of the corporation submitting this Bid, or of the partnership, or of all persons interested in this Bid as principals are as follows:

_____ _____

_____ _____

_____ _____

©COPYRIGHT 2014 CH2M HILL

If Sole Proprietor or Partnership

IN WITNESS hereto the undersigned has set his (its) hand this _____day of _____, 20_____.

_____
Signature of Bidder

_____
Title

If Corporation

IN WITNESS WHEREOF the undersigned corporation has caused this instrument to be executed and its seal affixed by its duly authorized officers this __ day of _____, 20__.

(SEAL)

_____
Name of Corporation

By: _____

Title: _____

Attest: _____
Secretary

END OF SECTION

©COPYRIGHT 2014 CH2M HILL

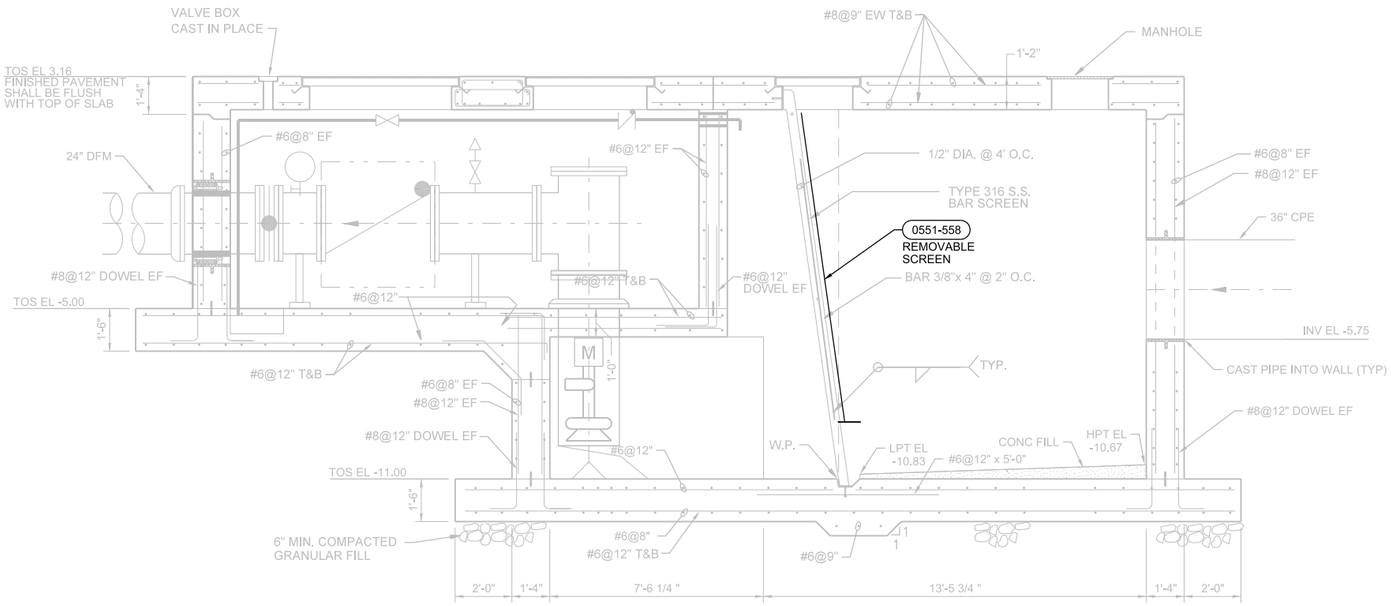

REFERENCE SECTION

3/8" = 1'-0"

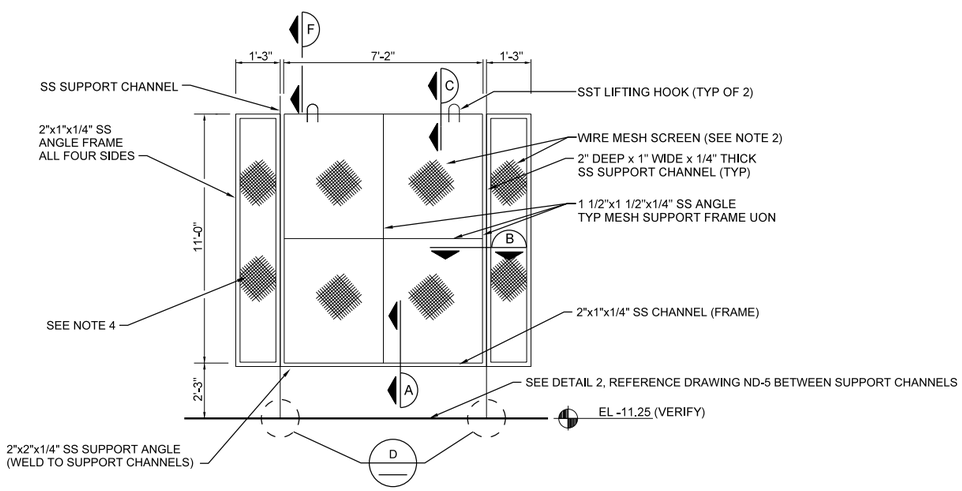

NOTES:

1. CONTRACTOR TO COORDINATE WITH BAR SCREEN DETAILS 1 & 2 AND SECTION A ON REFERENCE DRAWING ND-5.
2. WIRE CLOTH TO BE MCNICHOLS CO. 1-INCH SQUARE MESH TYPE OPENING, "INTERCRIMP" STYLE WIRE CLOTH WITH 12 GAUGE WIRE. WIRE CLOTH MANUFACTURED OF TYPE 316 SST.
3. ALL STAINLESS STEEL SHALL BE TYPE 316.
4. CONTRACTOR TO PROVIDE 2 EACH FOR PERMAMENT ATTACHMENT TO SS BARS, EACH SIDE OF REMOVABLE TRASH SCREEN. ATTACH BY WELDING TO EXISTING SS BARS EVERY 1'-6" EACH SIDE.

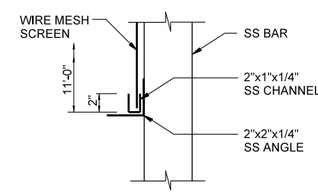

DETAIL A
NTS

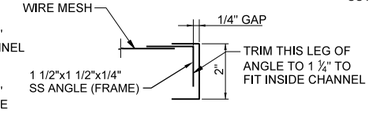

DETAIL B
NTS

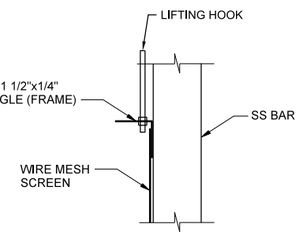

DETAIL C
NTS

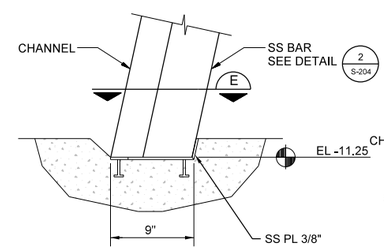

DETAIL D
NTS

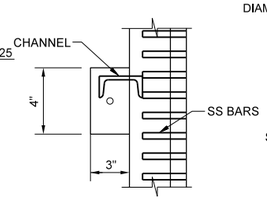

DETAIL E
NTS

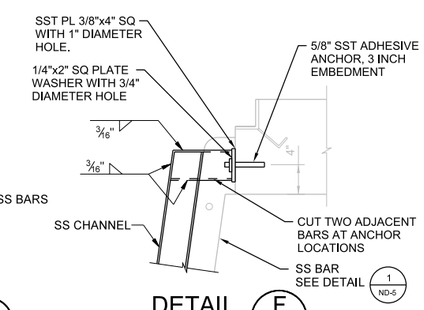

DETAIL F
NTS

REMOVABLE TRASH SCREEN

NTS

0551-558

NO.	DATE	REVISION	CHK	APVD	BY	APVD
1	04/2014	ADDENDUM # 3			TL	DG

DSGN S TROYAN | DR T LOOSE | CHECKED-BY | SEALNAME

©CH2M HILL 2014, ALL RIGHTS RESERVED.

REUSE OF DOCUMENTS: THIS DOCUMENT, AND THE IDEAS AND DESIGNS INCORPORATED HEREIN, AS AN INSTRUMENT OF PROFESSIONAL SERVICE IS THE PROPERTY OF CH2M HILL AND IS NOT TO BE USED, IN WHOLE OR IN PART, FOR ANY OTHER PROJECT WITHOUT THE WRITTEN AUTHORIZATION OF CH2M HILL.

3011 S.W. WILLISTON ROAD
GAINESVILLE, FLORIDA 32608
EB0000072 AAC001992
Dalayne Lange PE 70194

NORTH SIMONTON STORMWATER
EMERGENCY OUTFALL
CITY OF KEY WEST
KEY WEST, FLORIDA

CH2MHILL®

STRUCTURAL
REMOVABLE SCREEN
SECTION AND DETAIL

AS NOTED
VERIFY SCALE
BAR IS ONE INCH ON ORIGINAL DRAWING.
0 1"

DATE	APRIL 2014
PROJ	476166
DWG	S-02
SHEET	X of X

ADDENDUM

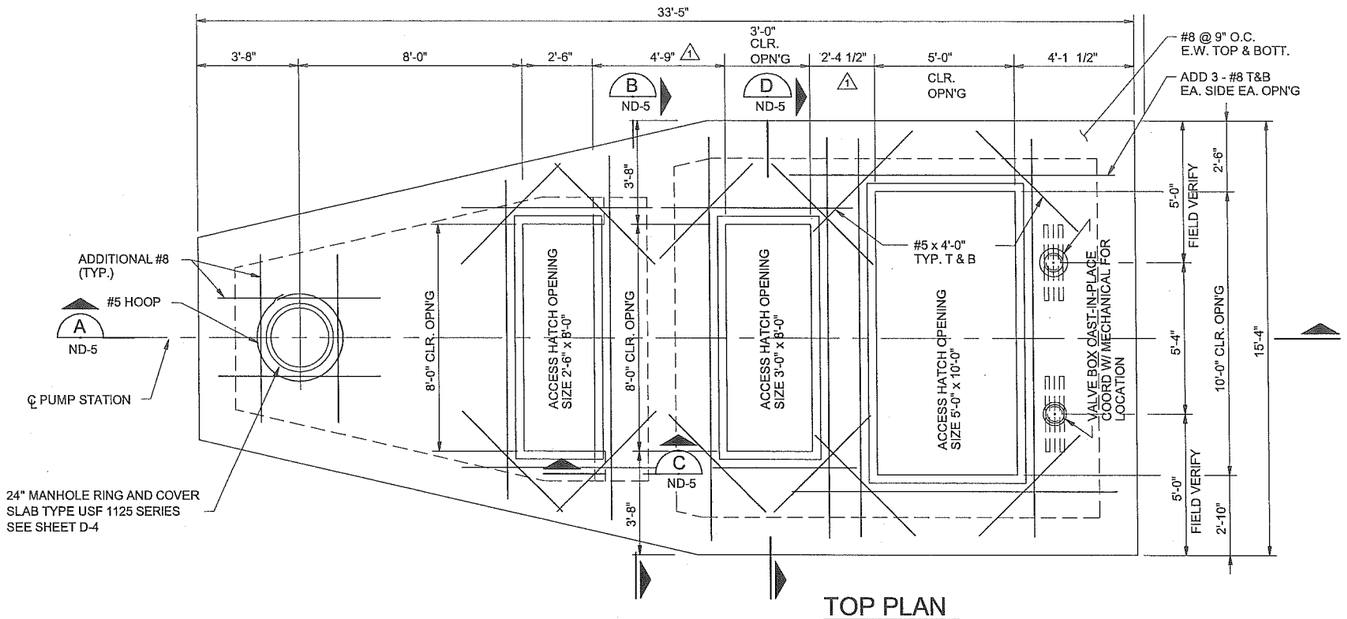

TOP PLAN

3/8"=1'-0"

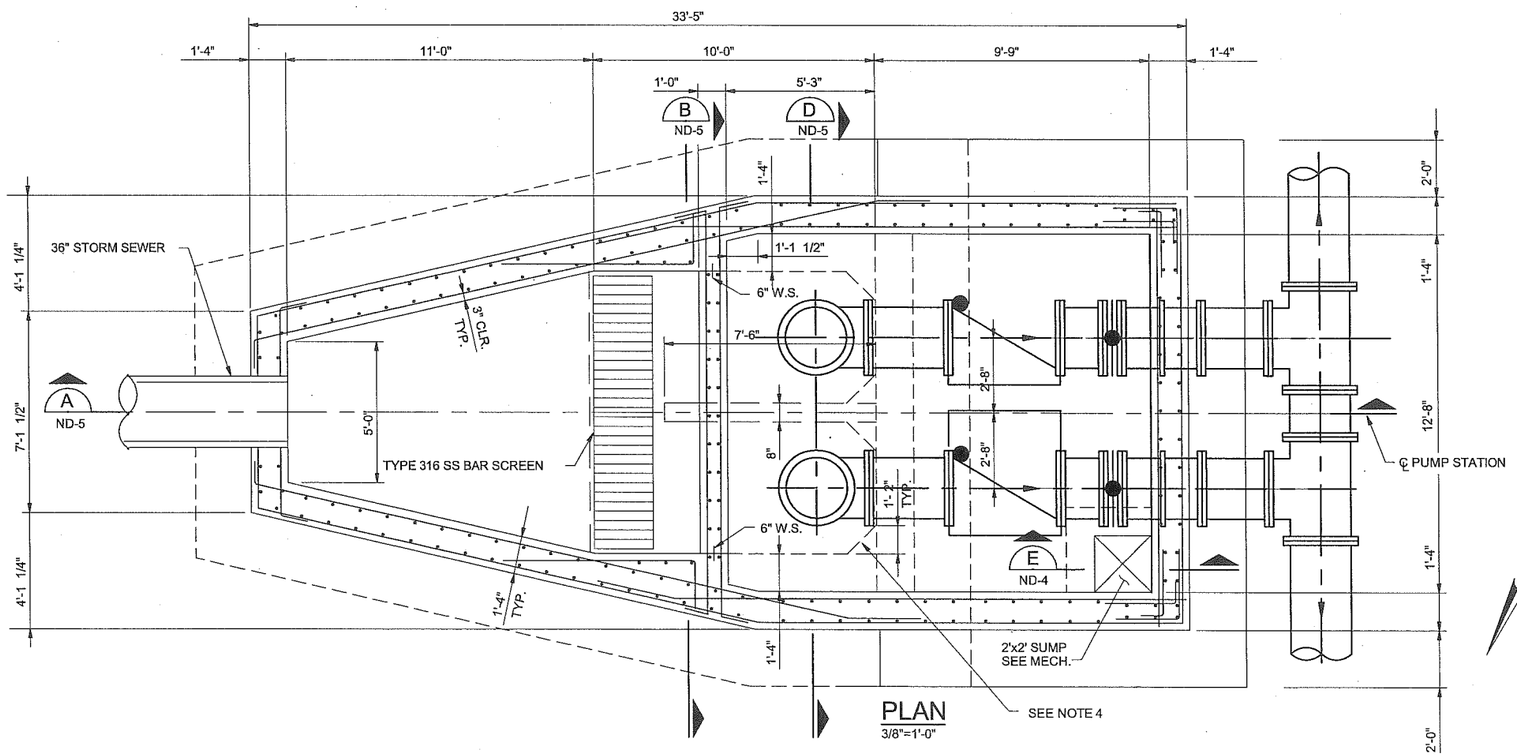

PLAN

3/8"=1'-0"

PLAN NOTES:

1. SEE SHEET D1-D5 FOR STANDARD DETAILS AND GENERAL NOTES.
2. SEE SPECIFICATIONS FOR DEWATERING REQUIREMENTS.
3. COORDINATE ALL PENETRATIONS WITH MECHANICAL AND CIVIL DRAWINGS.
4. PROVIDE 14" x 14" FILLET IN CORNER TYPICALLY AS SHOWN IN PUMP WELL ONLY.

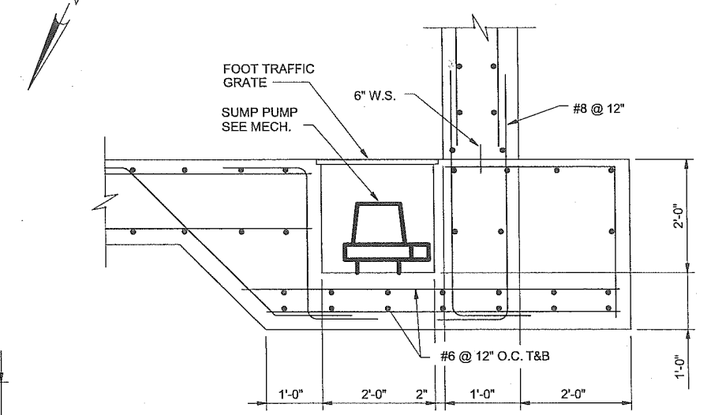

SECTION E

3/4"=1'-0" ND-4

RECORD PLANS AND SPECIFICATIONS

THIS RECORD DRAWING (OR RECORD SPECIFICATION) HAS BEEN PREPARED BASED UPON INFORMATION FURNISHED IN PART BY OTHERS. WHILE THIS INFORMATION IS BELIEVED TO BE RELIABLE, PEREZ ENGINEERING & DEVELOPMENT, INC. CANNOT ASSURE ITS ACCURACY, AND IS THEREFOR NOT RESPONSIBLE FOR THE ACCURACY OF THIS RECORD DRAWING (OR RECORD SPECIFICATION) OR FOR ANY ERROR OR OMISSION WHICH MAY HAVE BEEN INCORPORATED INTO IT AS A RESULT. THOSE RELYING ON THIS RECORD DRAWING ARE ADVISED TO OBTAIN INDEPENDENT VERIFICATION OF ITS ACCURACY BEFORE APPLYING IT FOR ANY PURPOSE.

ALLEN E. PEREZ P.E.#51468

P E & D, Inc.
Perez Engineering & Development, Inc.
1010 [illegible]
Idaho Falls, ID 83402
ph [illegible] fax [illegible]

REUSE OF DOCUMENTS: THIS DOCUMENT, AND THE IDEAS AND DESIGNS INCORPORATED HEREIN, AS AN INSTRUMENT OF PROFESSIONAL SERVICE, IS THE PROPERTY OF CH2M HILL AND IS NOT TO BE USED, IN WHOLE OR IN PART, FOR ANY OTHER PROJECT WITHOUT THE WRITTEN AUTHORIZATION OF CH2MHILL.
©CH2M HILL

CONFORMED

DSGN S. CIULLA						VERIFY SCALE
DR J. PRUITT						BAR IS ONE INCH ON ORIGINAL DRAWING. 0 — 1"
CHK	1	02/03	ADDENDUM NO. 1	RM	KW	IF NOT ONE INCH ON THIS SHEET, ADJUST SCALES ACCORDINGLY.
APVD	NO.	DATE	REVISION	BY	APVD	

CH2MHILL
800 FAIRWAY DRIVE, SUITE 350
DEERFIELD BEACH, FLORIDA 33441
EB0000072 AAC001992

City of Key West

PUMP ASSISTED STORMWATER DRAINAGE WELLS
DUVAL STREET - NORTH
TASK ORDER NO. 5-01

PUMP STATION - STRUCTURAL

SHEET	29
DWG	ND-4
DATE	JAN. 2003
PROJ	166482.05

6482c005.dlv 03-APR-2003

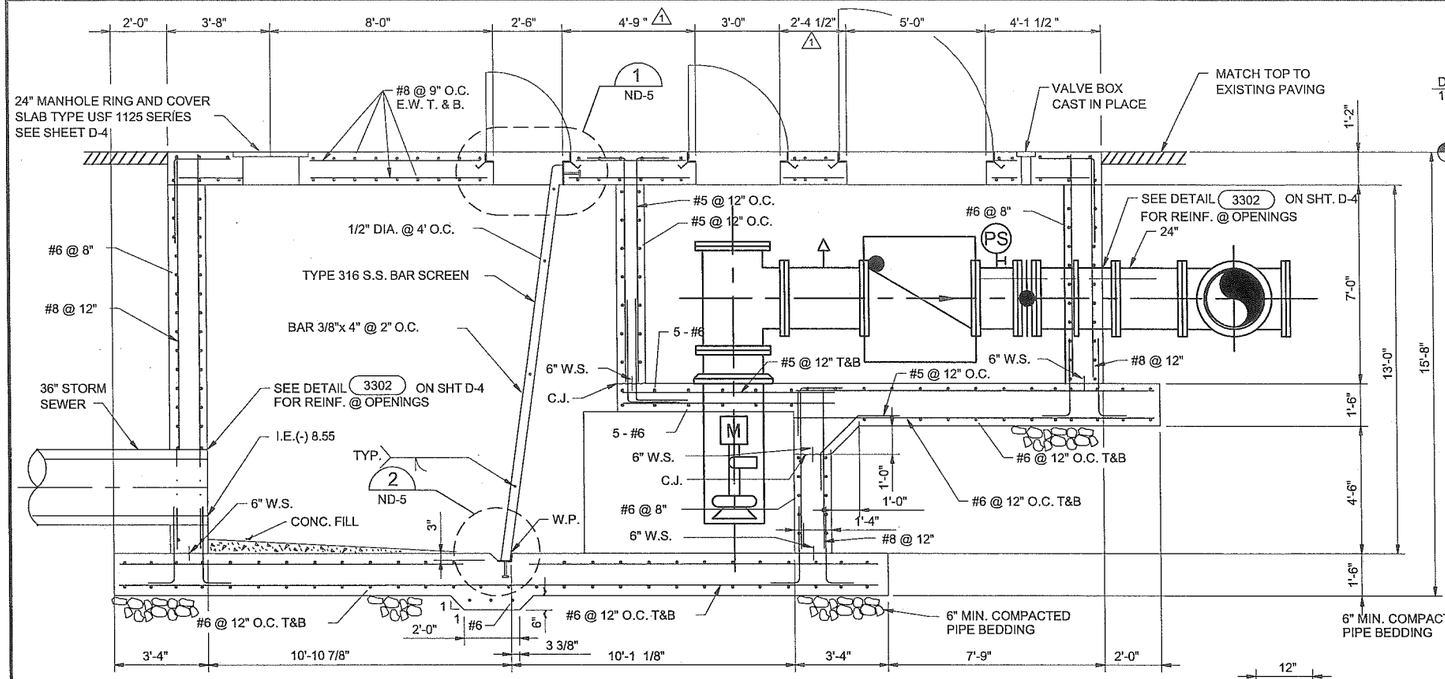

SECTION A
3/8"=1'-0" ND-4

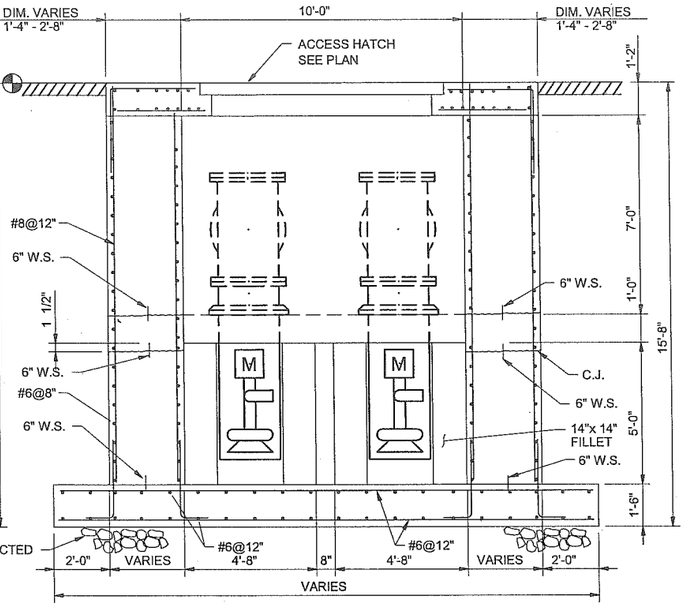

SECTION B
3/8"=1'-0" ND-4

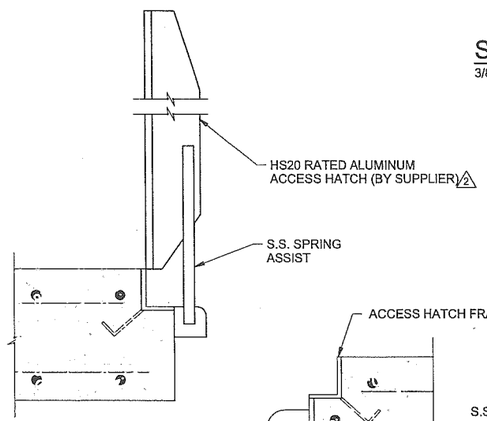

SECTION A
3/8"=1'-0" ND-4

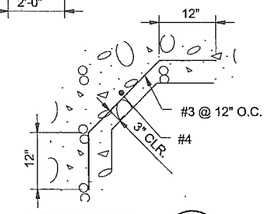

SECTION E
1 1/2"=1'-0" ND-5

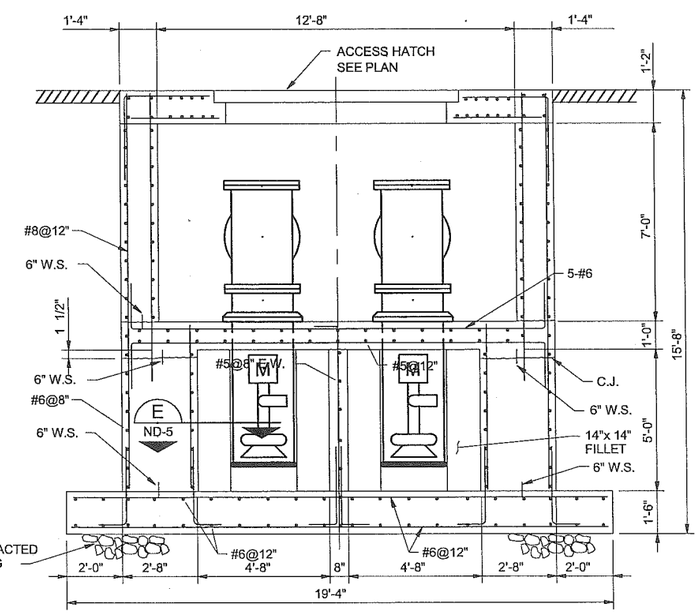

SECTION D
3/8"=1'-0" ND-4

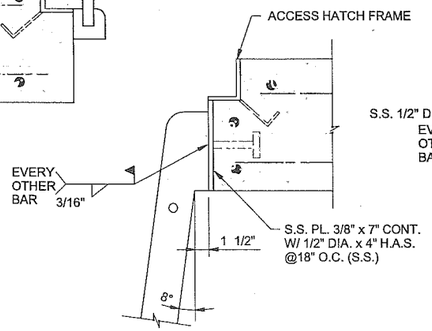

DETAIL 1
1 1/2"=1'-0" ND-5

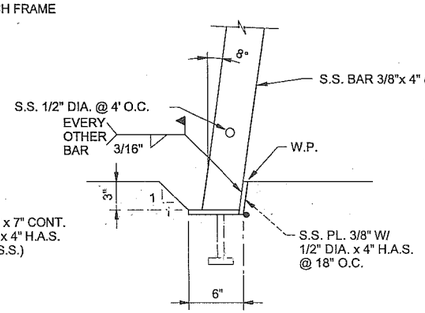

DETAIL 2
1 1/2"=1'-0" ND-5

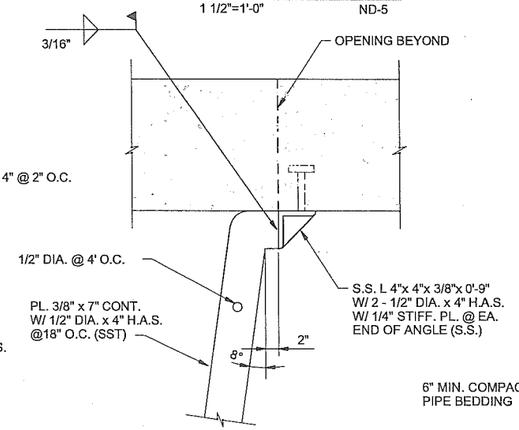

SECTION C
1 1/2"=1'-0" ND-4

RECORD PLANS AND SPECIFICATIONS

THIS RECORD DRAWING (OR RECORD SPECIFICATION) HAS BEEN PREPARED BASED UPON INFORMATION FURNISHED IN PART BY OTHERS. WHILE THIS INFORMATION IS BELIEVED TO BE RELIABLE, PEREZ ENGINEERING & DEVELOPMENT, INC. ASSUMES NO RESPONSIBILITY FOR THE ACCURACY OF THIS RECORD DRAWING (OR RECORD SPECIFICATION) OR FOR ANY ERROR OR OMISSION WHICH MAY HAVE BEEN INCORPORATED INTO THE RECORD DRAWING (OR RECORD SPECIFICATION) BY THE AUTHORITY OF ITS REVISION. IT IS ADVISED TO OBTAIN INDEPENDENT VERIFICATION OF ITS ACCURACY BEFORE APPLYING IT FOR ANY PURPOSE.

ALLEN E. PEREZ P.E.#51468

P E & D, Inc.
Perez Engineering & Development, Inc.
1100 SUNRISE KEYS, SUITE 400
KEY WEST, FL 33040
ph (305) 293-0466 • fax (305) 293-0465

REUSE OF DOCUMENTS: THIS DOCUMENT, AND THE IDEAS AND DESIGNS INCORPORATED HEREIN, AS AN INSTRUMENT OF PROFESSIONAL SERVICE, IS THE PROPERTY OF CH2M HILL AND IS NOT TO BE USED, IN WHOLE OR IN PART, FOR ANY OTHER PROJECT WITHOUT THE WRITTEN AUTHORIZATION OF CH2MHILL.

© CH2M HILL

CONFORMED

DSGN S. CIULLA						
DR J. PRUITT	2	02/03	ADDENDUM NO. 2	RM	KW	
CHK	1	02/03	ADDENDUM NO. 1	RM	KW	
APVD	NO.	DATE	REVISION	BY	APVD	

VERIFY SCALE
BAR IS ONE INCH ON ORIGINAL DRAWING.
0 1"
IF NOT ONE INCH ON THIS SHEET, ADJUST SCALES ACCORDINGLY.

CH2MHILL
800 FAIRWAY DRIVE, SUITE 350
DEERFIELD BEACH, FLORIDA 33441
EB0000072 AAC001992

City of Key West

PUMP ASSISTED STORMWATER DRAINAGE WELLS
DUVAL STREET - NORTH
TASK ORDER NO. 5-01

PUMP STATION - STRUCTURAL

SHEET	30
DWG	ND-5
DATE	JAN. 2003
PROJ	166482.05

6482c006.dlv 03-APR-2003