Key West City Hall at Glynn Archer

1300 White Street
Key West, Florida

traffic study

prepared for:
City of Key West, Florida

Traf Tech
ENGINEERING, INC.

October 2013

Key West City Hall
At Glynn Archer

1300 White Street
Key West, Florida

Traffic Impact Analysis

October 2013

Prepared for:
City of Key West
3132 Flagler Avenue
Key West, Florida 33040

Prepared by:
Traf Tech Engineering, Inc.
8400 N. University Drive, Suite 309
Tamarac, Florida 33321
Phone: (954) 582-0988
Fax: (954) 582-0989

TABLE OF CONTENTS

INTRODUCTION.....1

INVENTORY.....3
Former Land Use and Access.....3
Proposed Land Use and Access.....3

EXISTING CONDITIONS.....4
Roadway System.....4
Study Intersections.....4

TRAFFIC COUNTS.....6

TRIP GENERATION.....13

TRIP DISTRIBUTION AND TRAFFIC ASSIGNMENT.....15

TRAFFIC ANALYSES.....19
Future Conditions Traffic Volumes.....15
Level of Service Analyses.....20

SUMMARY & CONCLUSIONS.....22

LIST OF FIGURES

FIGURE 1 – Project Location Map.....2
FIGURE 2 – Existing Roadway Geometry.....5
FIGURE 3 – Existing AM Peak Hour Traffic Counts.....7
FIGURE 4 – Existing PM Peak Hour Traffic Counts.....8
FIGURE 5 – Existing Daily Traffic Counts.....10
FIGURE 6 – Existing AM (7-9) Peak Hour Traffic Counts.....11
FIGURE 7 – Existing PM (4-6) Peak Hour Traffic Counts.....12
FIGURE 8 – Project Trip Distribution.....16
FIGURE 9 – New Project Traffic Assignment – AM Peak Hour.....17
FIGURE 10 – New Project Traffic Assignment – PM Peak Hour.....18
FIGURE 11 – Future (2016) Background (w/out Project) AM Peak Hour.....22
FIGURE 12 – Future (2016) Background (w/out Project) PM Peak Hour.....23
FIGURE 13 – Future (2016) Total (w/Project) AM Peak Hour.....24
FIGURE 14 – Future (2016) Total (w/Project) PM Peak Hour.....25
FIGURE 15 – Future (2016) Daily Traffic Volumes.....26
FIGURE 16 – Future (2016) AM Peak Hour Traffic Volumes.....27
FIGURE 17 – Future (2016) PM Peak Hour Traffic Volumes.....28
FIGURE 18 – Peak Hour Driveway Volumes.....31

LIST OF TABLES

TABLE 1 – Trip Generation Summary.....14
TABLE 2 – Intersection Levels of Service.....29

INTRODUCTION

The City of Key West, Florida is planning to relocate their City Hall facilities to the former site of the Glynn Archer Elementary School on White Street. The subject site is located in the southwest quadrant of the intersection at White Street and United Street in the City of Key West, Monroe County, Florida. More specifically, the subject site is located at 1300 White Street. The location of the project site is illustrated graphically in Figure 1 on the following page.

Traf Tech Engineering, Inc. is a member of the Bender & Associates Architects, P.A. consultant team selected by the City of Key West to provide architectural, engineering, planning and professional services relative to the relocation of the City Hall facilities to the subject site. Traf Tech Engineering's role on this project is to prepare a traffic impact study in connection with the development of this governmental facility on the former education site. This study addresses trip generation and the traffic impacts created by the project on the nearby transportation network.

This study is divided into eight (8) sections, as listed below:

1. Inventory
2. Existing Conditions
3. Traffic Counts
4. Trip Generation
5. Trip Distribution and Traffic Assignment
6. Traffic Analyses
7. Driveway Volumes
8. Summary & Conclusions

Traf Tech
ENGINEERING, INC.

Project Location Map

Figure 1
Key West City Hall
At Glynn Archer
Monroe County, Florida

INVENTORY

Former Land Use and Access

The subject site currently contains the former Glynn Archer Elementary School facilities. This school was in service until the Spring Semester of 2013 and the most recent student enrollment consisted of 420 students. Vehicular access to the site is provided by two (2) driveways located on United Street and one (1) driveway located on Grinnell Street. There are four (4) back-out parking spaces on United Street located approximately 75 feet west of White Street. And, school bus parking was previously provided along White Street in front of the school.

Proposed Land Use and Access

The proposed project will utilize the existing facilities as a City Hall governmental complex for the City of Key West, Florida. The proposed redevelopment program will result in 37,122 square feet of government office space. This space will provide up to 105 work stations for city employees. Vehicular access to the subject site will be provided by two (2) driveways located on United Street. There will also be a passenger drop-off area on United Street as well as a 50-foot loading zone. In addition, five (5) parallel, on-street parking spaces will be located on White Street in front of the building.

The proposed project is anticipated to be redeveloped and occupied by Spring 2016. Appendix A contains the proposed preliminary site plan for the Key West City Hall at Glynn Archer project.

EXISTING CONDITIONS

This section of the report addresses the transportation system located in the vicinity of the proposed Key West City Hall at Glynn Archer site.

Roadway System

The roadway system located in the general vicinity of the project site consists of a fully developed grid network with roadways generally oriented in the north / south and the east / west directions. The primary roadways in the immediate area include White Street, United Street, Truman Avenue (US 1 / State Road 5), and Flagler Avenue. Within the project study area, each of these roadways is a two-lane facility with one (1) lane in each direction. Grinnell Street and Seminary Street are two-lane / two-way local streets adjacent to the subject site.

Study Intersections

Seven (7) nearby intersections were identified as the locations to be evaluated as part of this traffic impact analysis. These intersections are:

- Truman Avenue and White Street (signalized)
- United Street and White Street (signalized)
- Seminary Street and White Street (stop-controlled)
- South Street and White Street (stop-controlled)
- Flagler Avenue and White Street (signalized)
- Grinnell Street and United Street (stop controlled)
- Grinnell Street and Seminary Street (stop controlled)

Figure 2 depicts the existing lane geometry of the seven (7) intersections selected for analysis purposes. The number of through lanes on the street system surrounding the project site is also depicted in this figure.

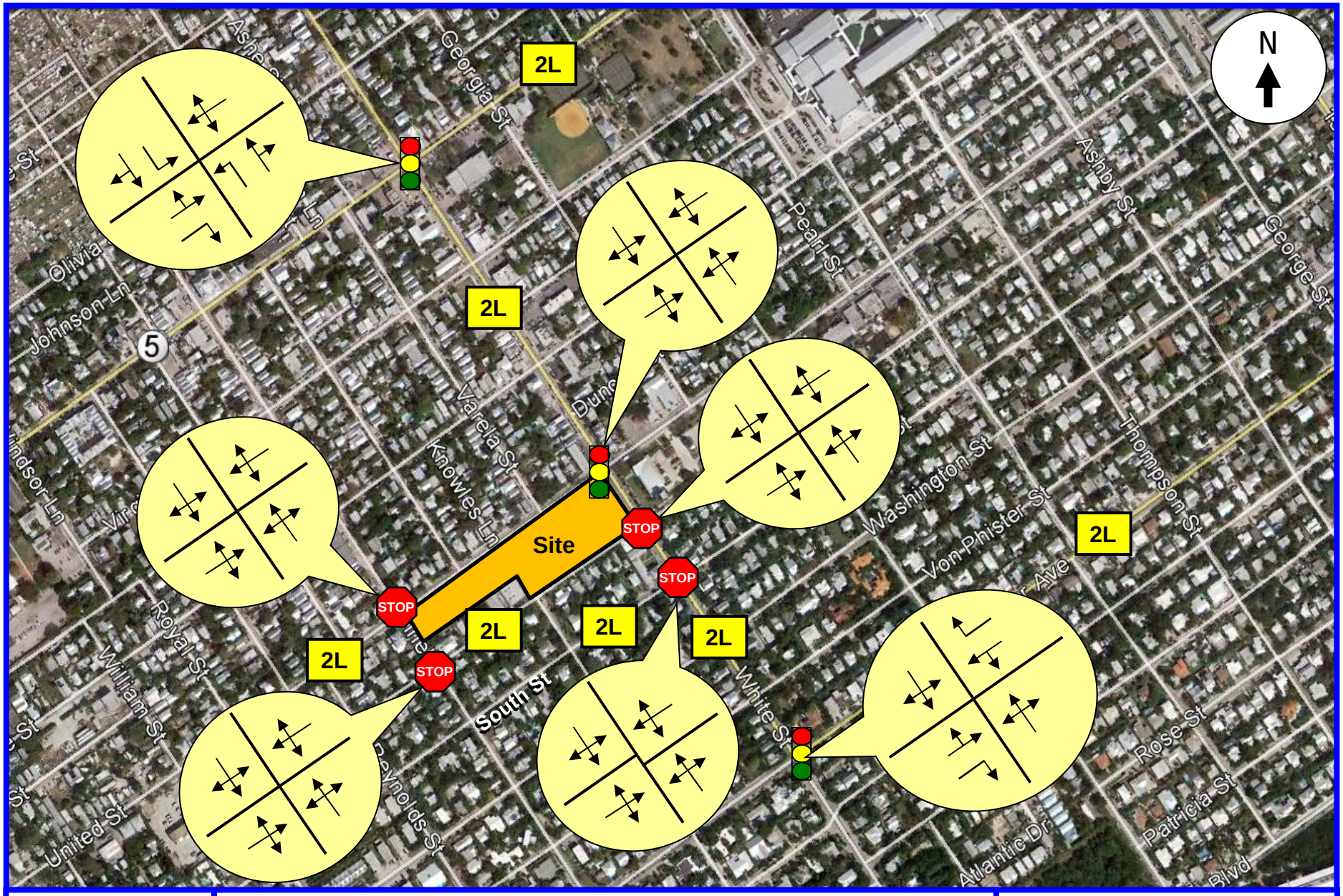

Traf Tech
ENGINEERING, INC.

Existing Roadway Geometry

Figure 2
Key West City Hall
At Glynn Archer
Monroe County, Florida

Intersection Turning Movement Counts

Traf Tech Engineering, Inc., in association with Crossroads Engineering Data, Inc., collected intersection turning movement counts at the following locations:

- Truman Avenue and White Street
- United Street and White Street
- Seminary Street and White Street
- South Street and White Street
- Flagler Avenue and White Street
- Grinnell Street and United Street
- Grinnell Street and Seminary Street

These intersection turning movement counts were collected on Tuesday, June 18, 2013 during the AM peak period (7:00 AM to 9:00 AM) and the PM peak period (4:00 PM to 6:00 PM).[1] Figures 3 and 4 summarize the results of this traffic data collection effort. Appendix B contains the traffic data as collected in the field.

[1] The turning movement count at South Street & White Street was collected on Wednesday, July 31, 2013.

Traf Tech
ENGINEERING, INC.

Existing AM Peak Hour Traffic Counts

Source: Crossroads Engineering Data, Inc. 6/18/13
(Traffic count at South Street and White Street performed on 7/31/13)

Figure 3
Key West City Hall
At Glynn Archer
Monroe County, Florida

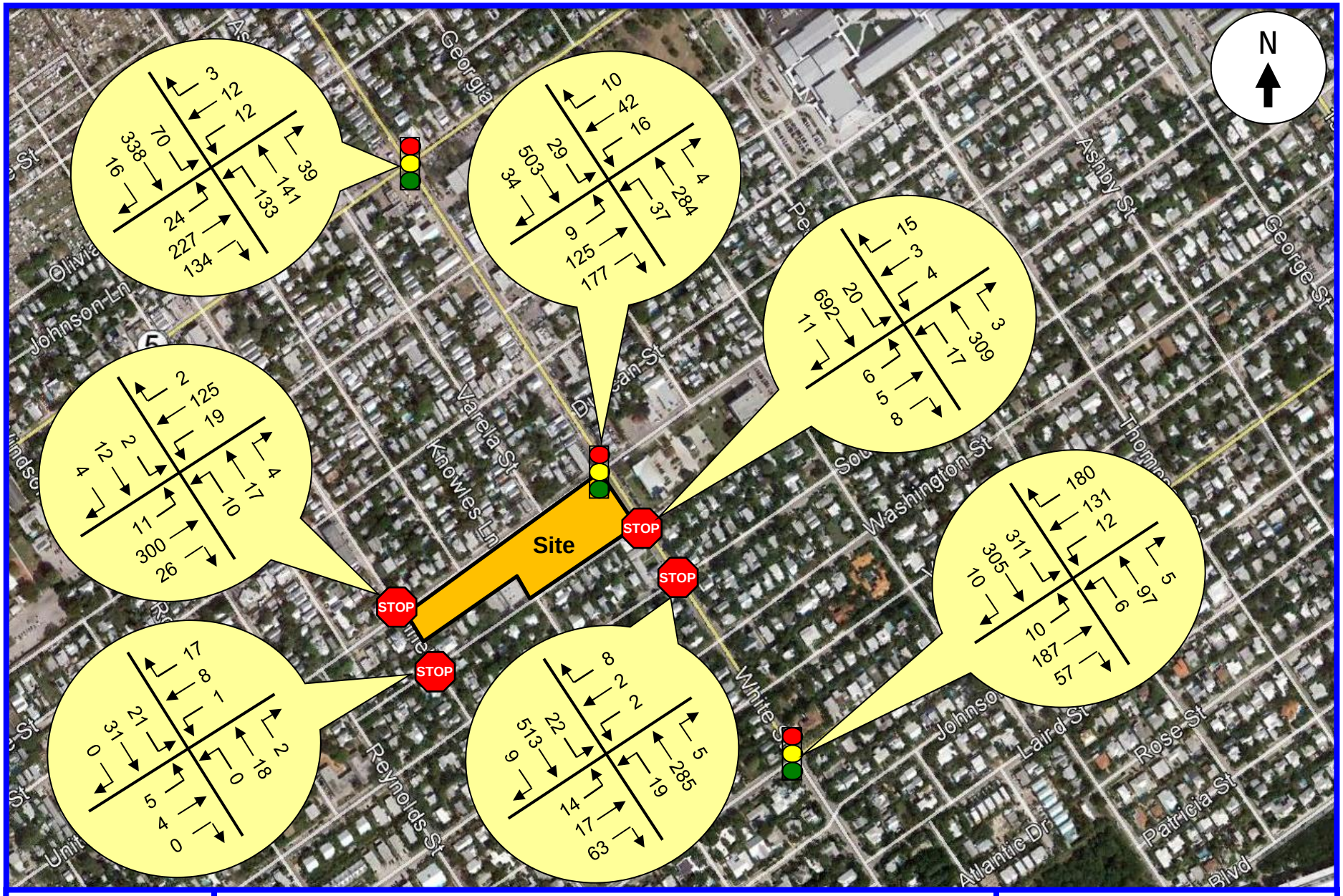

Traf Tech
ENGINEERING, INC.

Existing PM Peak Hour Traffic Counts

Source: Crossroads Engineering Data, Inc. 6/18/13
(Traffic count at South Street and White Street performed on 7/31/13)

Figure 4
Key West City Hall
At Glynn Archer
Monroe County, Florida

Roadway Link Counts

Forty-eight (48) hour roadway link counts were also collected by Crossroads Engineering Data, Inc. at the following locations:

- Truman Avenue: east of White Street
- Truman Avenue: west of White Street
- White Street: south of Catherine Street
- White Street: north of Washington Street
- United Street: west of White Street
- Seminary Street: west of White Street
- South Street: west of White Street
- Grinnell Street: between United Street and Seminary Street
- Flagler Avenue: east of White Street

These roadway link counts were collected on Tuesday and Wednesday, June 18 and 19, 2013.[1] Figure 5 summarizes the two-day average daily traffic volumes at the referenced count locations. Figures 6 and 7 present the AM and PM peak hour roadway link volumes. Appendix C contains the traffic data as collected in the field.

[1] The roadway link count on South Street between White Street and Reynolds Street was collected July 30 and 31, 2013.

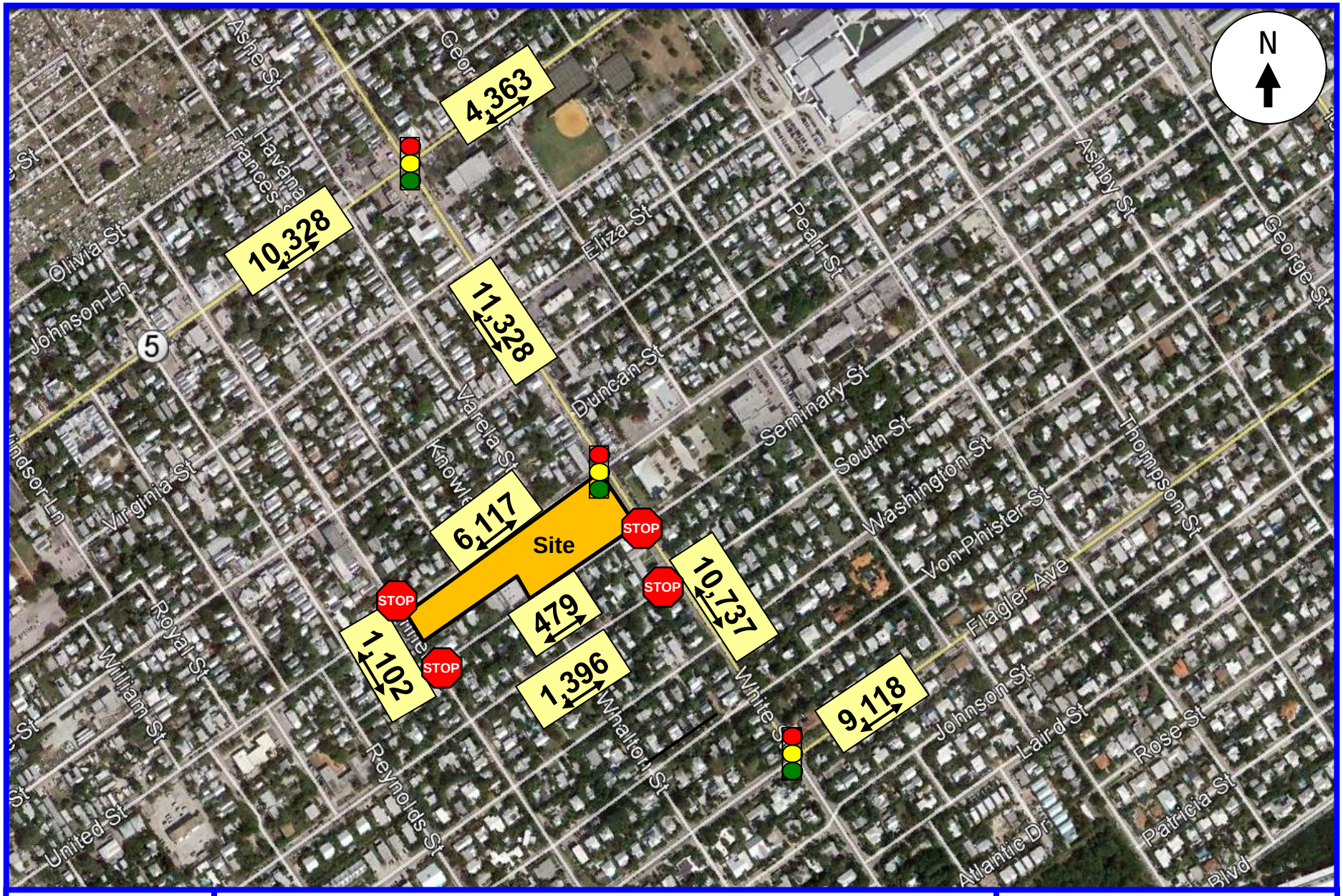

Traf Tech
ENGINEERING, INC.

Existing Daily Traffic Counts

Source: Crossroads Engineering Data, Inc. 6/18-19/13
(Traffic count on South Street collected on 7/30-31/13)

Figure 5
Key West City Hall
At Glynn Archer
Monroe County, Florida

Traf Tech
ENGINEERING, INC.

Existing AM (7-9) Peak Hour Traffic Counts

Source: Crossroads Engineering Data, Inc. 6/18-19/13
(Traffic count on South Street collected on 7/30-31/13)

Figure 6
Key West City Hall
At Glynn Archer
Monroe County, Florida

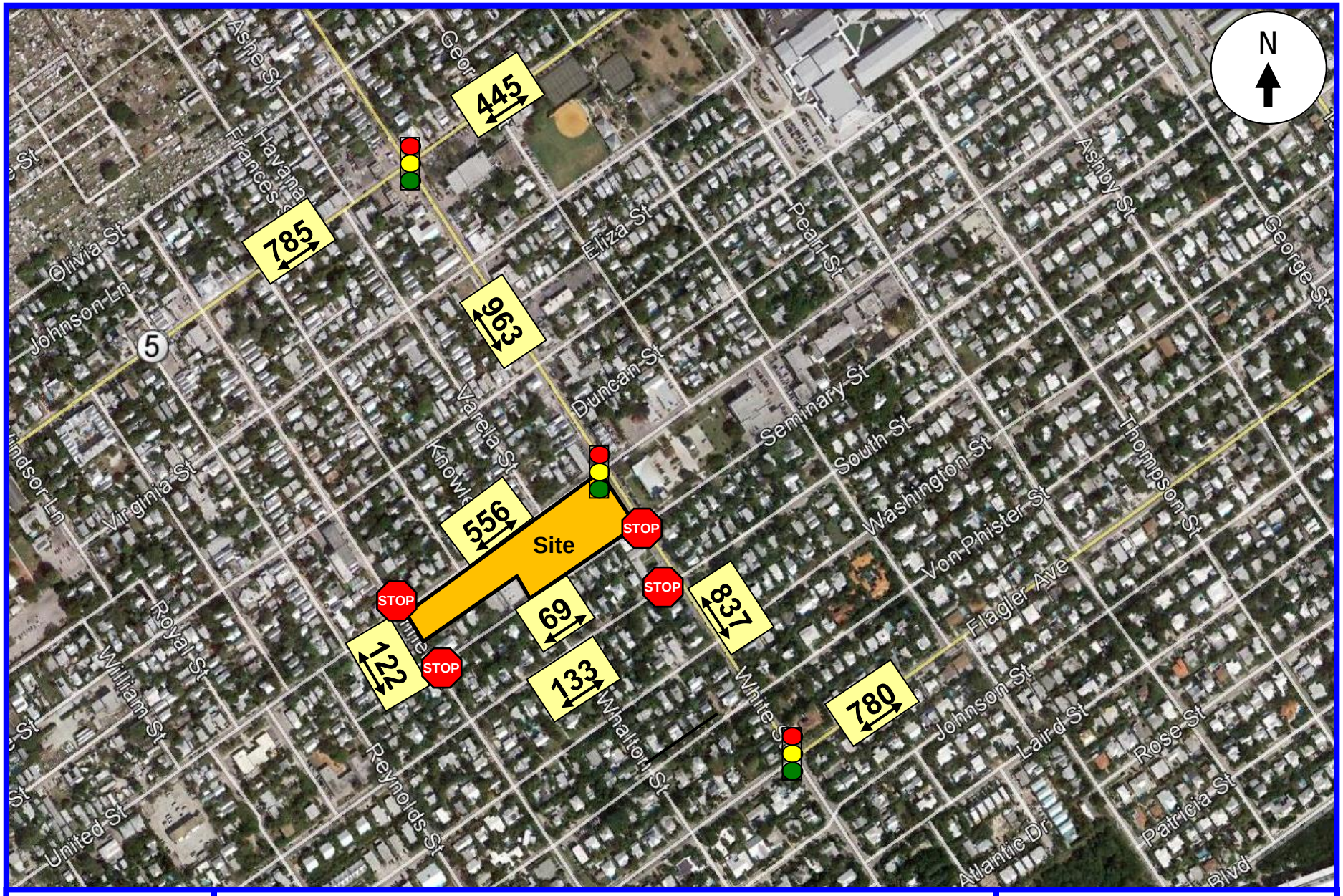

Traf Tech
ENGINEERING, INC.

Existing PM (4-6) Peak Hour Traffic Counts

Source: Crossroads Engineering Data, Inc. 6/18-19/13
(Traffic count on South Street collected on 7/30-31/13)

Figure 7
Key West City Hall
At Glynn Archer
Monroe County, Florida

TRIP GENERATION

The trip generation analysis for the proposed Key West City Hall at Glynn Archer project was based upon information contained in the Institute of Transportation Engineer's (ITE) *Trip Generation (9th Edition)* report. According to the subject ITE manual, the most appropriate land use categories for the former and the proposed uses are Land Use #520 – Elementary School and Land Use #733 – Government Office Complex. The trip generation rates used to determine the daily, AM peak, and PM peak vehicle trips associated with this analysis are presented below and excerpts from the referenced publication are presented in Appendix D.

ITE Land Use #520 – Elementary School

- Weekday: T = 1.29 (X)
  where T = number of trips and X = number of students
- AM Peak Hour of Generator: T = 0.45 (X) (55% in / 45% out)
- PM Peak Hour of Generator: T = 0.28 (X) (45% in / 55% out)
- PM Peak Hour (Adjacent Street 4 PM – 6 PM): T = 0.15 (X) (49% in / 51% out)

ITE Land Use #733 – Government Office Complex

- Weekday: T = 27.92 (X)
  where T = number of trips and X = 1,000 square feet gross floor area
- AM Peak Hour (Adjacent Street 7 AM – 9 AM): T = 2.21 (X) (89% in / 11% out)
- PM Peak Hour (Adjacent Street 4 PM – 6 PM): T = 2.85 (X) (31% in / 69% out)

In the case of the elementary school, the AM peak hour of the generator would have typically occurred between 7:00 AM and 9:00 AM while the PM peak hour of the generator would have typically occurred between 2:00 PM and 4:00 PM. Table 1 on the following page summarizes the vehicle trips associated with the proposed Key West City Hall at Glynn Archer project to be located at 1300 White Street in the City of Key West, Florida. Consistent with other uses in the City of Key West, it is expected that many employees and patrons are likely to utilize other modes transportation (i.e. walking, bicycling, etc.). To present a conservative analysis, no reductions for other modes have been applied to this analysis.

Table 1 Trip Generation Summary Key West City Hall at Glynn Archer - Monroe County, Florida								
		Daily	AM Peak Hour Trips			PM Peak Hour Trips		
Land Use	**Size**	**Trips**	**In**	**Out**	**Total**	**In**	**Out**	**Total**
Former Land Use								
Elementary School [1]	420 Students	542	104	85	189	31	32	63
Sub Total		**542**	**104**	**85**	**189**	**31**	**32**	**63**
Proposed Land Use								
City Hall [2]	37,122 Sq. Feet	1,036	73	9	82	33	73	106
Sub Total		**1,036**	**73**	**9**	**82**	**33**	**73**	**106**
Difference (Proposed - Former)		**494**	**(31)**	**(76)**	**(107)**	**2**	**41**	**43**

Compiled by: Traf Tech Engineering, Inc. (October 2013).
Source: Institute of Transportation Engineers (ITE) Trip Generation (9th Edition) Report.
[1] *ITE Land Use Code 520 - Elementary School.*
[2] *ITE Land Use Code 733 - Government Office Complex.*

As indicated in Table 1 above, the net difference in external vehicle trips anticipated to be generated by the proposed Key West City Hall project consists of 494 additional vehicle trips during a typical weekday, 107 fewer vehicle trips (31 inbound and 76 outbound) during the weekday AM peak hour, and 43 additional vehicle trips (2 inbound and 41 outbound) during the weekday PM peak hour. The vehicle trips associated with the PM peak hour of the generator for the school (i.e. 2:00 PM to 4:00 PM) is 118 (53 inbound and 65 outbound). The following is a summary of the trip generation comparison:

- The City Hall will result in 107 fewer AM peak hour (7:00 AM to 9:00 AM) vehicle trips
- When comparing the elementary school's release time traffic volumes with the PM peak hour (adjacent street) traffic generated by the City Hall complex, the City Hall will generate 12 fewer vehicle trips.
- The City Hall facility is projected to generate 43 additional PM peak hour (adjacent street) vehicle trips when compared with the former elementary school.

TRIP DISTRIBUTION AND TRAFFIC ASSIGNMENT

The trip distribution for Key West City Hall project was based upon knowledge of the study area, examination of the surrounding roadway network characteristics, review of current traffic volumes, and existing land use patterns. The general trip distribution for the project is summarized below:

- 10% to and from the north via White Street north of Truman Avenue
- 15% to and from the east via Truman Avenue east of White Street
- 35% to and from the west via Truman Avenue west of Simonton Street
- 15% to and from the west via Truman Avenue west of White Street
- 25% to and from the west via United Street
- 7% to and from the west via South Street west of Grinnell Street
- 23% to and from the south via White Street south of South Street
- 20% to and from the east via Flagler Avenue east of White Street
- 3% to and from the south via White Street south of Flagler Avenue

This trip distribution is reflected graphically in Figure 8 on the following page. The net new peak hour traffic generated by the project was assigned to the nearby transportation network using this traffic assignment. The resulting project traffic assignment is summarized in Figures 9 and 10.

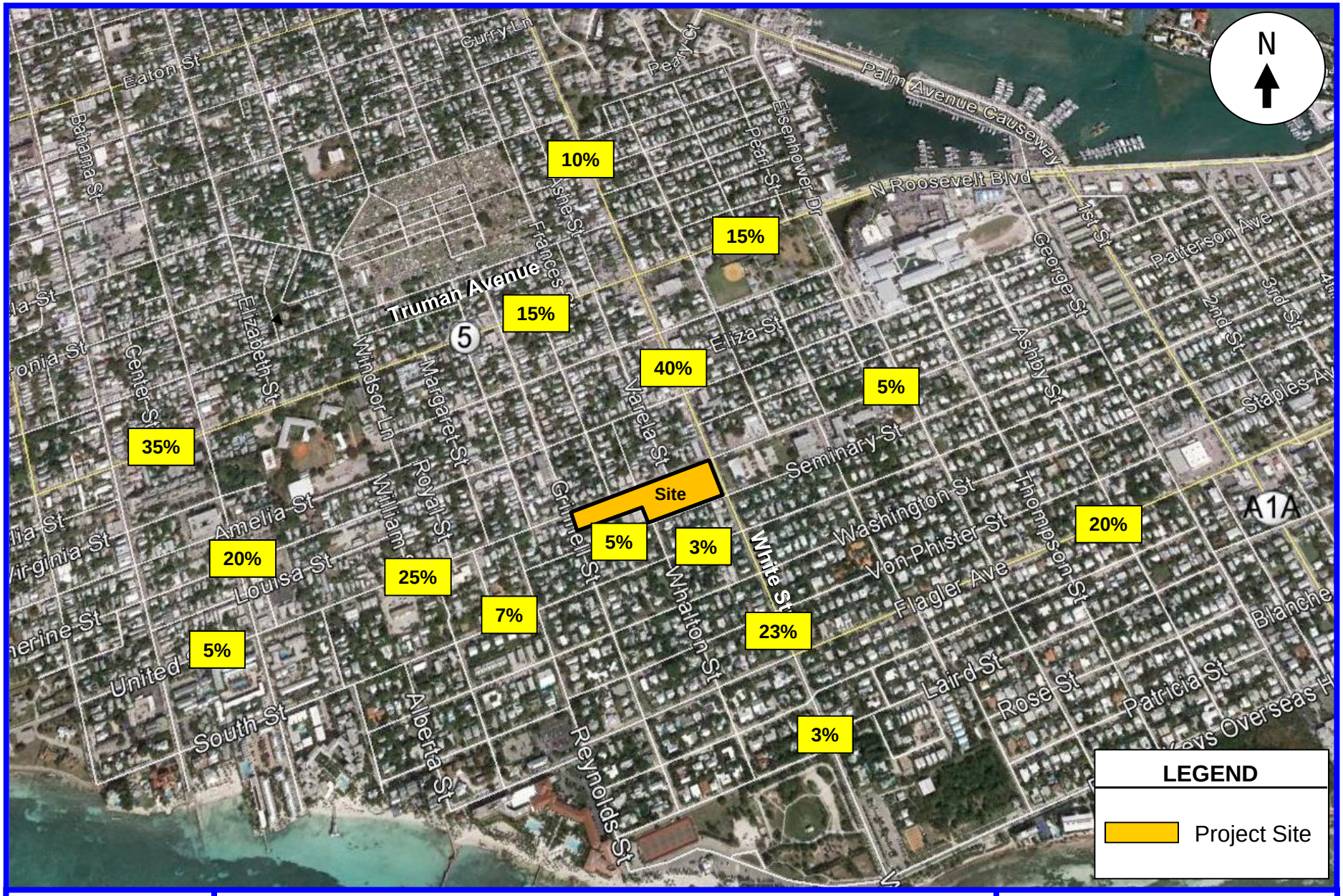

Traf Tech
ENGINEERING, INC.

Project Trip Distribution

Figure 8
Key West City Hall
At Glynn Archer
Monroe County, Florida

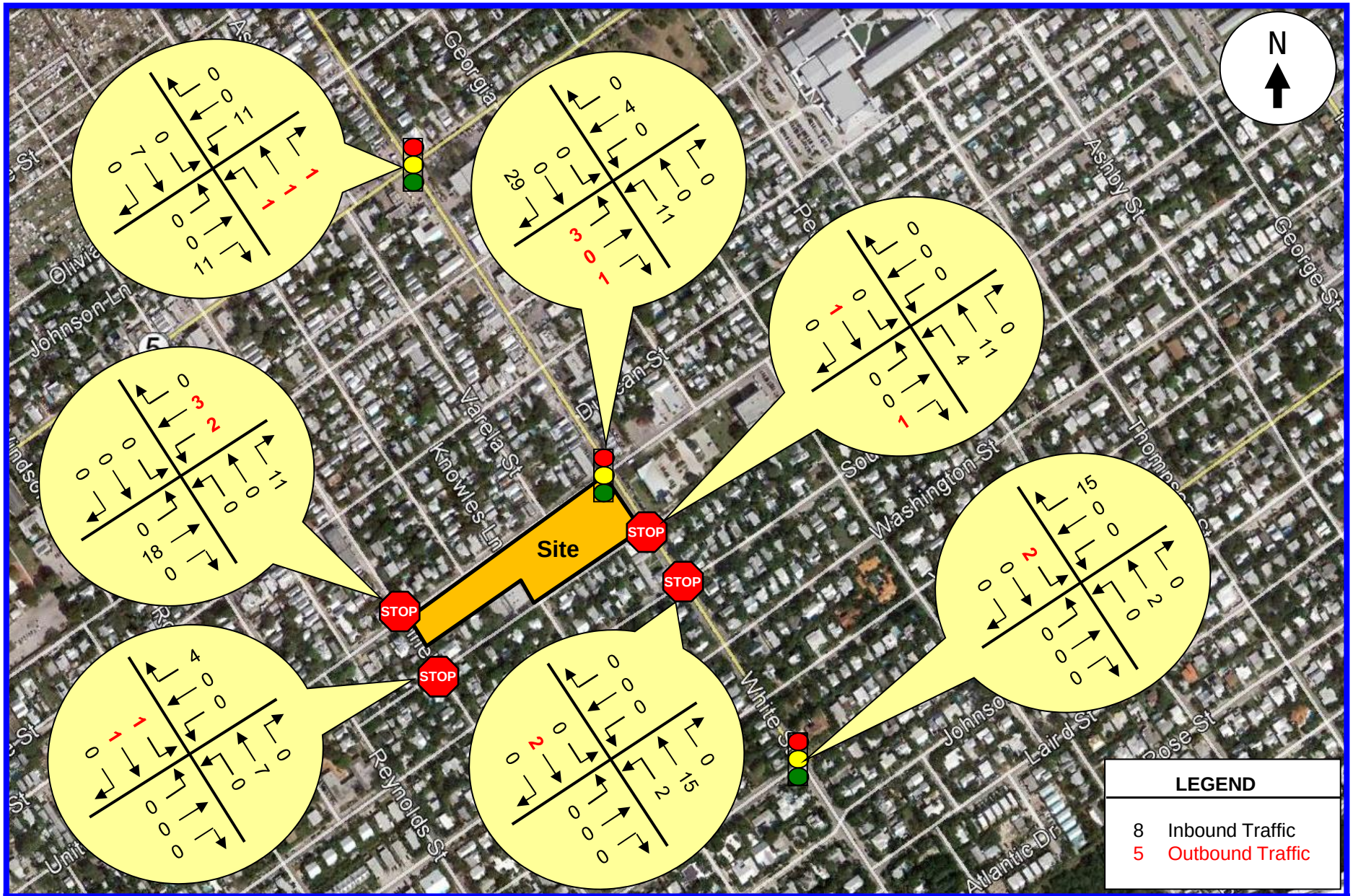

Traf Tech
ENGINEERING, INC.

New Project Traffic Assignment
AM Peak Hour

Figure 9
Key West City Hall
At Glynn Archer
Monroe County, Florida

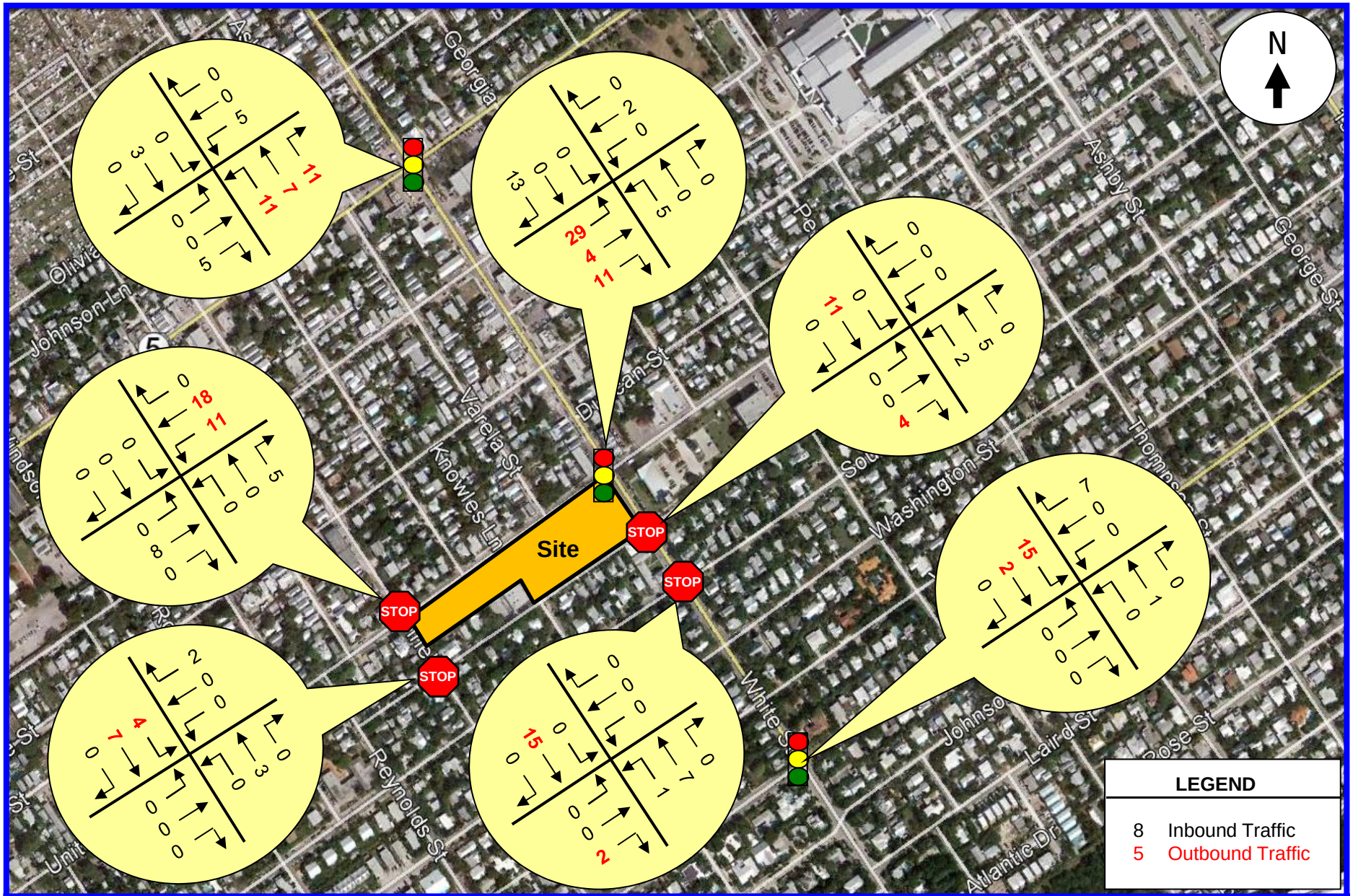

Traf Tech
ENGINEERING, INC.

New Project Traffic Assignment
PM Peak Hour

Figure 10
Key West City Hall
At Glynn Archer
Monroe County, Florida

This section of the study is divided into two (2) primary parts. The first part of this section involves the development of the future (2016) traffic volumes for the study area. The second part of this section includes level-of-service analyses for existing and future conditions.

Future Conditions Traffic Volumes

Future, build-out year (2016) traffic volumes were developed for the project study area in the following manner:

- **Average Peak Season Conversion Factor:** Traffic data collected on June 18th and 19th, 2013 was reviewed with respect to average peak season conditions. FDOT's Peak Season Factor Category report (see Appendix E) was consulted for this analysis. The peak season conversion factor reported for Monroe County for this time period (traffic counts collected between June 17th and June 23rd) is 1.10. For traffic collected on South Street at the end of July 2013, the peak season conversion factor is 1.11.

- **Historic Traffic Growth:** Research relative to the background traffic growth in the area was conducted. FDOT maintains several traffic count stations in the general vicinity of the subject project. These locations and their annual growth rates exhibited over the five-year period (2007 to 2012) are as follows:

    - White Street – north of Truman Avenue (Site #900025): +5.0%
    - Truman Avenue – west of White Street (Site #905008): -6.9%
    - White Street – south of Truman Avenue (Site #900026): +1.8%
    - United Street – east of Royal Street (Site #905035): +5.3%
    - Flagler Avenue – east of White Street (Site #905025): -3.3%

A review of this data reveals an overall areawide growth rate of approximately 1.9%. To present a consistent and conservative approach, the traffic counts within the project study area were increased by 2.0% per year to reflect future (2016) conditions. This data is presented in Appendix F.

- **Roosevelt Boulevard Construction Adjustment:** Construction on Roosevelt Boulevard between Eisenhower Drive and US 1 in Key West began in April 2012. This activity has impacted traffic patterns in many areas of Key West including the immediate area of the future City Hall facility. A review of the traffic counts collected as part of this study (i.e. data collected in June 2013) was compared with the traffic volumes recorded by the Florida Department of Transportation (FDOT) in early 2012 (prior to commencement of construction).

  This review revealed that current volumes are approximately 30% higher on White Street near the project site when compared with pre-construction levels. This review also revealed that the current peak hour volumes along Truman Avenue are approximately 50% lower than the pre-construction volumes and daily volumes are approximately 30% lower than the pre-construction volumes. In order to present a conservative (i.e. "worst-case") scenario, the through volumes on Truman Avenue were doubled for the peak hours (multiplied by 1.5 for the daily time period) while the abnormally high volumes on White Street due to construction activities were not adjusted.

The future traffic calculations (including peak season adjustments, background traffic growth, construction adjustments and project traffic) for the study intersections and roadway links are contained in Appendix G in tabular format.

Figures 11 and 12 include future background peak hour intersection traffic only (without the proposed project) and Figures 13 and 14 include the additional peak hour intersection traffic anticipated to be generated by the Key West City Hall at Glynn Archer project. Figures 15 through 17 present the daily, AM peak hour (7-9 AM) and PM peak hour (4-6 PM) roadway link volumes. (Note that, since the traffic counts were collected after the school was closed in June 2013, all of the project traffic generated by the future development was assigned to the roadway network.)

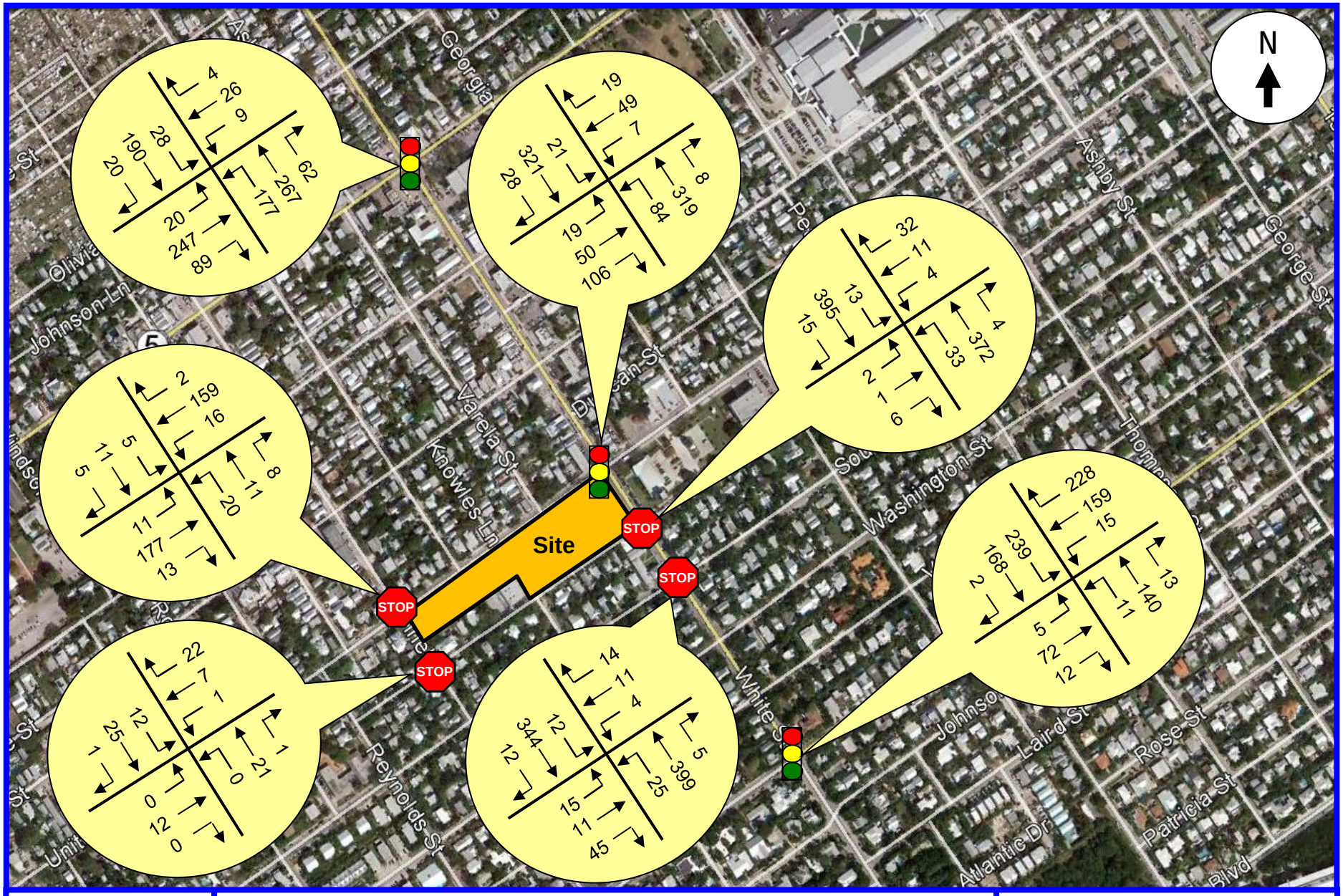

Traf Tech
ENGINEERING, INC.

Future (2016) Background (w/out Project) AM Peak Hour Traffic Volumes

Figure 11
Key West City Hall
At Glynn Archer
Monroe County, Florida

Traf Tech ENGINEERING, INC.	**Future (2016) Background (w/out Project) PM Peak Hour Traffic Volumes**	**Figure 12** Key West City Hall At Glynn Archer Monroe County, Florida

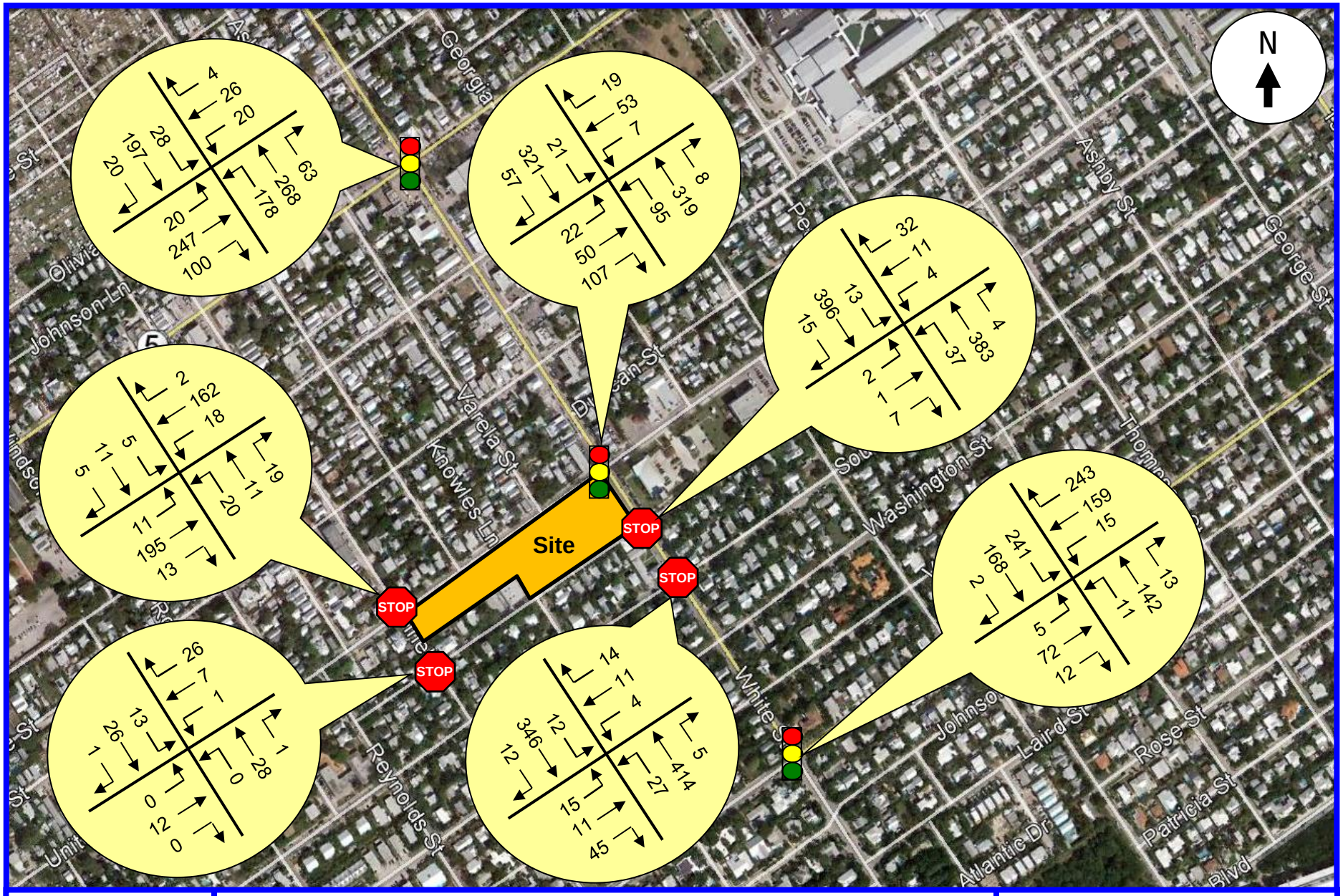

Traf Tech
ENGINEERING, INC.

Future (2016) Total (w/ Project) AM Peak Hour Traffic Volumes

Figure 13
Key West City Hall
At Glynn Archer
Monroe County, Florida

Traf Tech
ENGINEERING, INC.

Future (2016) Total (w/ Project)
PM Peak Hour Traffic Volumes

Figure 14
Key West City Hall
At Glynn Archer
Monroe County, Florida

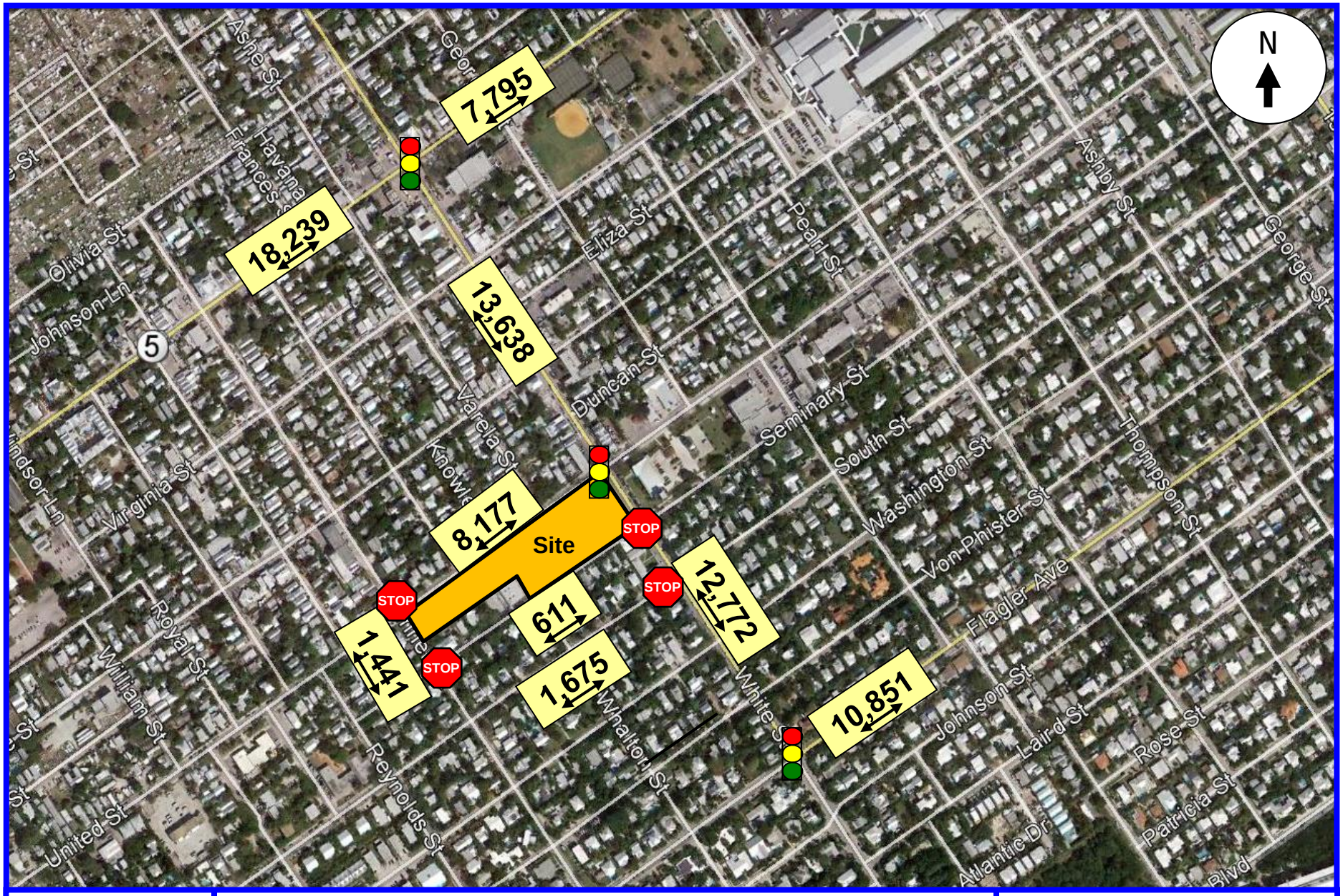

Traf Tech
ENGINEERING, INC.

Future (2016) Daily Traffic Volumes With Project Traffic

Figure 15
Key West City Hall
At Glynn Archer
Monroe County, Florida

Traf Tech
ENGINEERING, INC.

Future AM (7-9) Peak Hour Traffic Volumes With Project Traffic

Figure 16
Key West City Hall
At Glynn Archer
Monroe County, Florida

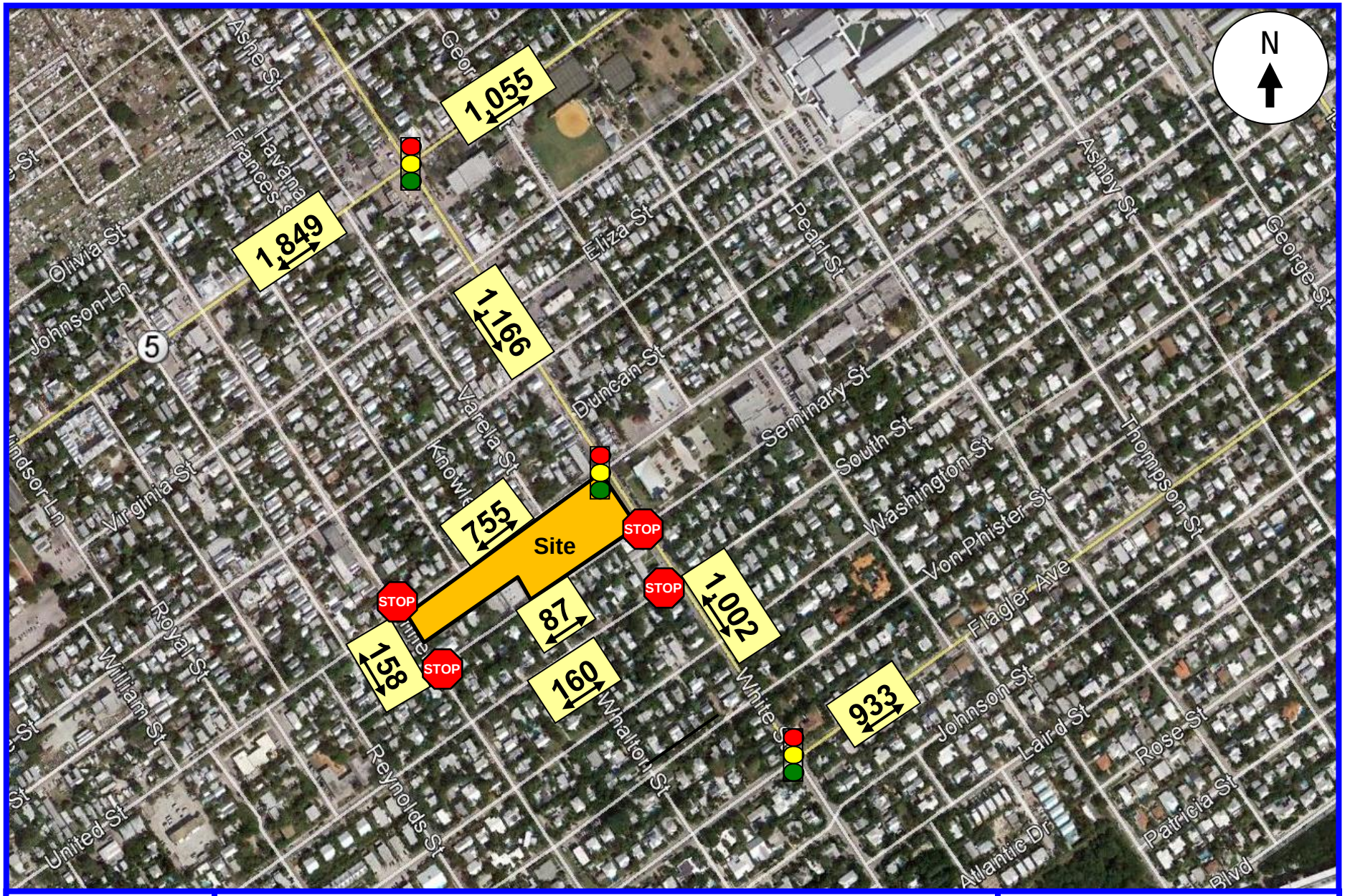

Traf Tech
ENGINEERING, INC.

Future PM (4-6) Peak Hour Traffic Volumes With Project Traffic

Figure 17
Key West City Hall
At Glynn Archer
Monroe County, Florida

Level of Service (LOS) Analyses – Intersections

The intersection Level of Service (LOS) analyses were conducted for the seven (7) study intersections. These analyses were undertaken following the capacity / level of service procedures outlined in the Highway Capacity Manual (HCM) using the SYNCHRO software. The results of these capacity analyses are summarized in Table 2 below.

Table 2
Intersection Levels of Service
Key West City Hall at Glynn Archer - Monroe County, Florida

	Existing (2013) Conditions		Future (2016) Conditions w/out Project Traffic		Future (2016) Conditions With Project Traffic	
Intersection	**AM Peak Hour**	**PM Peak Hour**	**AM Peak Hour**	**PM Peak Hour**	**AM Peak Hour**	**PM Peak Hour**
Truman Ave & White St **	A	B	B	C	B	C
United St & White St **	B	B	B	C	B	C
Seminary St & White St *	B	C	B	D	C	D
South St & White St *	B	C	C	D	C	D
Flagler Ave & White St **	B	B	B	C	B	C
Grinnell St & United St *	B	B	B	C	B	C
Grinnell St & Seminary St *	A	A	A	A	A	A

Source: Highway Capacity Manual and SYNCHRO.

* At stop-control intersections, the LOS on the critical side street is documented in this table.

** At signalized intersections, the LOS for the intersection as a whole is documented in this table.

As indicated in Table 2 above, each of the study intersections is presently operating at an acceptable Level of Service (LOS) and will continue to do so in 2016 with the subject Key West City Hall project in place. The signal timing data obtained from the City of Key West is presented in Appendix H and the SYNCHRO output of the intersection capacity analyses are contained in Appendix I.

DRIVEWAY VOLUMES

This section of the report presents the anticipated AM and PM peak hour turning movement volumes at each of the project driveways located on United Street. These volumes are presented in Figure 18 on the following page.

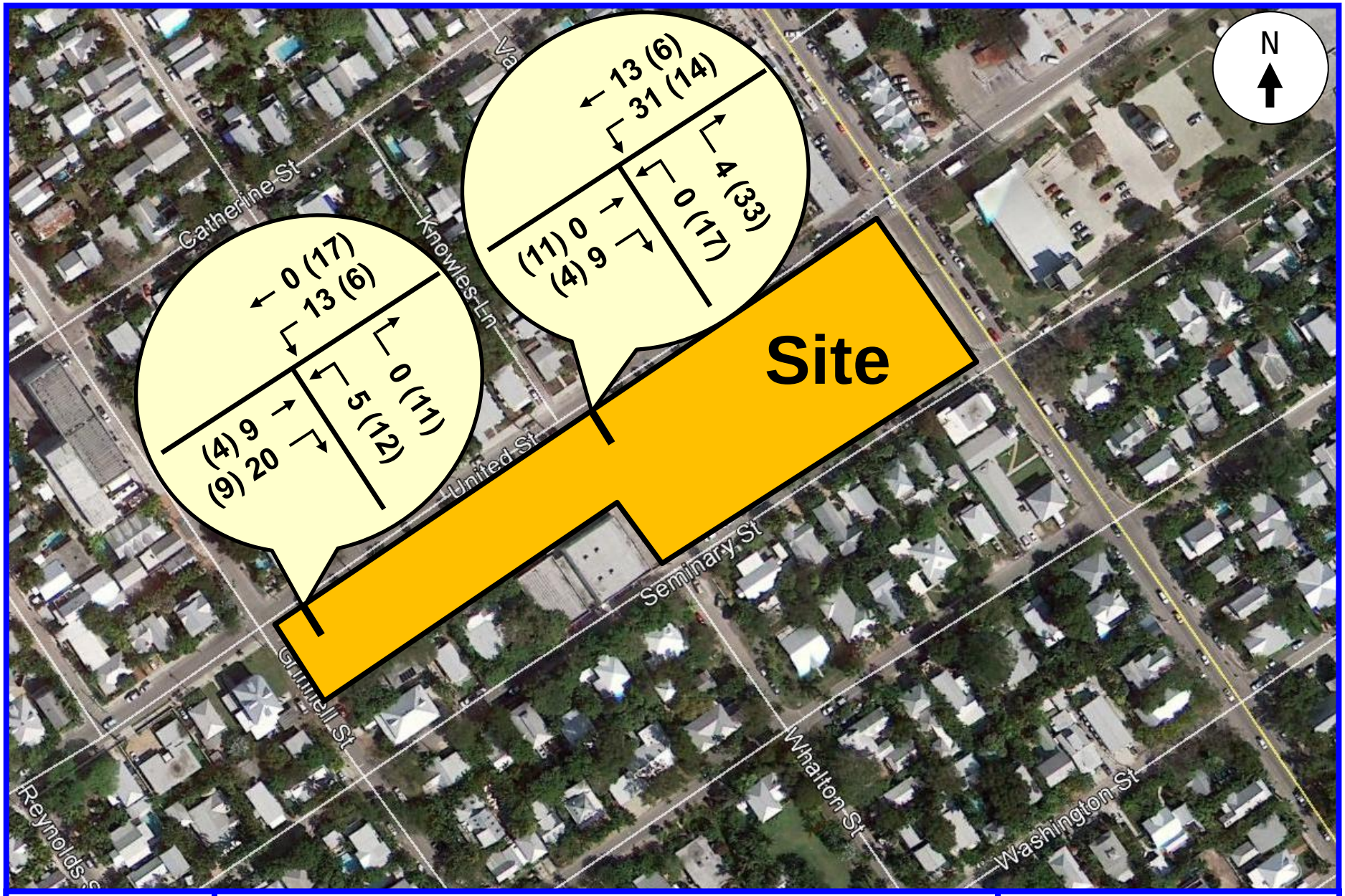

Traf Tech
ENGINEERING, INC.

Peak Hour Driveway Volumes

Figure 18
Key West City Hall
At Glynn Archer
Monroe County, Florida

SUMMARY & CONCLUSIONS

The City of Key West, Florida is planning to relocate their City Hall facilities to the former site of the Glynn Archer Elementary School on White Street. The subject site is located in the southern quadrant of the intersection at White Street and United Street in the City of Key West, Monroe County, Florida. More specifically, the subject site is located at 1300 White Street.

The proposed project will utilize the existing facilities as a City Hall governmental complex for the City of Key West, Florida. The proposed redevelopment program will result in 37,122 square feet of government office space. This space will provide up to 105 work stations for city employees. Vehicular access to the subject site will be provided by two (2) driveways located on United Street. There will also be a passenger drop-off area on United Street as well as a 50-foot loading zone. In addition, five (5) parallel, on-street parking spaces will be located on White Street in front of the building. The proposed project is anticipated to be redeveloped and occupied by Spring 2016.

When compared with the former school facilities at this location, the net difference in external vehicle trips anticipated to be generated by the proposed Key West City Hall project consists of 494 additional vehicle trips during a typical weekday, 107 fewer vehicle trips (31 inbound and 76 outbound) during the weekday AM peak hour, and 43 additional vehicle trips (2 inbound and 41 outbound) during the weekday PM peak hour.

Based upon the foregoing analyses, the transportation network located in the vicinity of the project has ample capacity to absorb the traffic impacts created by the proposed Key West City Hall facilities. In other words, the nearby roadway system is currently operating at an acceptable Level of Service (LOS) and will continue to do so in 2016 with the subject Key West City Hall project in place. In addition, the proposed access driveways on United Street are project to operate adequately.

APPENDIX A

Key West City Hall at Glynn Archer

Preliminary Site Plan

SITE DATA TABLE

	CODE REQUIREMENT	EXISTING	PROPOSED	VARIANCE REQUEST
ZONING	HPS			
FLOOD ZONE	ZONE X			
SIZE OF SITE	118,491 S.F. (2.72 ACRES)			
HEIGHT	25' MAX.	46.7' (FROM SURVEY)		
FRONT SETBACK	20'	41.4'		
SIDE SETBACK	5' OR 10% OF WIDTH TO 15'	31.79' (SOUTH SIDE)		
SIDE SETBACK	5' OR 10% OF WIDTH TO 15'	31.77' (NORTH SIDE)		
STREET SIDE SETBACK	10'	24.58' (SOUTH), 31.79' (NORTH)		
REAR SETBACK	20'	442.41'		
F.A.R.	1.0 MAX.	57,967 / 118,491 = .49	39,497 / 118,491 = .33	
BUILDING COVERAGE	40% MAXIMUM	43,117 / 118,491 = 36.4%		
IMPERVIOUS SURFACE	50% MAXIMUM	92,658 / 118,491 = 78.2%		
PARKING	37122 / 300 = 124 SPACES	30 SPACES	124 SPACES	
HANDICAP PARKING	5 SPACES	0 SPACES	5 SPACES	
BICYCLE PARKING	32 SPACES	0 SPACES	32 SPACES	
OPEN SPACE / LANDSCAPING				
NUMBER & TYPE OF UNITS				
CONSUMPTION AREAS				

PARKING SPACE COUNT:

REGULAR (9' X 18') PARKING SPACES:	97 SPACES
COMPACT (7.5' X 15') PARKING SPACES:	18 SPACES
ACCESSIBLE (12' X 18') PARKING SPACES:	5 SPACES
EEV PARKING SPACES:	4 SPACES
TOTAL PARKING SPACES:	124 SPACES

GROSS FLOOR AREA (MEASURED TO INSIDE OF EXTERIOR WALLS):

BUILDING A + AUDITORIUM, FIRST FLOOR:	14,088 S.F.
BUILDING A + UPPER WALKWAY, SECOND FLOOR:	7466 S.F.
BUILDING B, FIRST FLOOR:	7534 S.F.
BUILDING B, SECOND FLOOR:	7534 S.F.
TOTAL GROSS BUILDING AREA:	37,122 S.F.

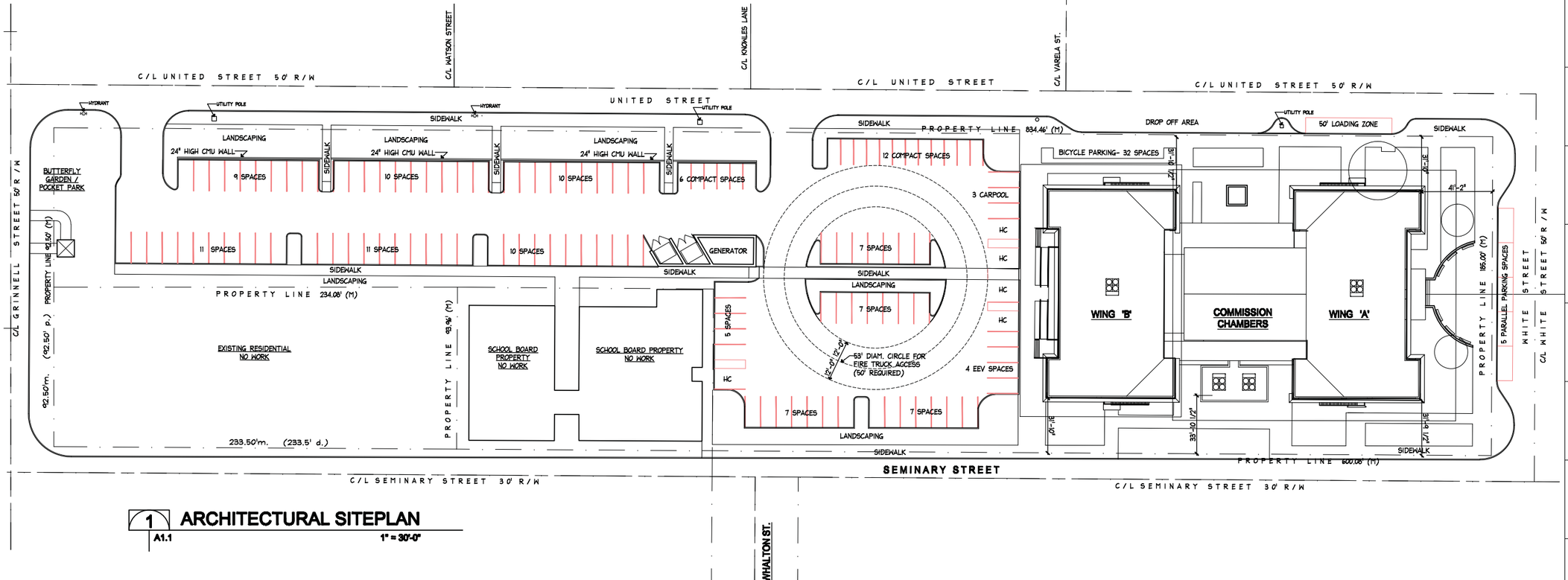

1 **ARCHITECTURAL SITEPLAN**
A1.1 1" = 30'-0"

REVISIONS:

KEY WEST CITY HALL AT GLYNN ARCHER

1302 WHITE STREET KEY WEST, FLORIDA
CITY OF KEY WEST

MCHARRYASSOCIATES
ARCHITECTURE / ENGINEERING / INTERIORS
AAC000986 EB0003663
2780 SW DOUGLAS ROAD, SUITE 302
MIAMI, FLORIDA 33133 (305)445-3765
WWW.MCHARRY.COM

410 Angela Street
Key West, Florida 33040
Telephone (305) 296-1347
Facsimilie (305) 296-2727
Florida License AAC002022

Bender & Associates ARCHITECTS p.a.

Project Nº: 1305
PROPOSED ARCHITECTURAL SITEPLAN
Date: 8/8/13

A1.1
1 OF --

APPROVALS
SIGNATURE
DEPARTMENT

APPENDIX B

Traffic Counts

Intersection Turning Movement Counts

Crossroads Engineering

13284 SW 120th Street
Miami, FL 33186
305-233-3997

CLIENT: TRAFTECH
JOB NO.: 2013-042
PROJECT: KEY WEST CITY HALL
COUNTY: MONROE

File Name : truman ave @ white st
Site Code : 00000000
Start Date : 6/18/2013
Page No : 1

Groups Printed- AUTOS - HEAVY VEHICLES

	WHITE ST From North				TRUMAN AVE From East				WHITE ST From South				TRUMAN AVE From West				
Start Time	Right	Thru	Left	Peds	Right	Thru	Left	Peds	Right	Thru	Left	Peds	Right	Thru	Left	Peds	Int. Total
07:00 AM	1	35	4	7	0	0	0	6	5	23	30	2	9	14	1	4	141
07:15 AM	3	28	4	4	1	0	3	4	9	18	31	3	14	12	2	3	139
07:30 AM	1	42	4	4	0	2	2	4	8	39	21	2	9	15	1	6	160
07:45 AM	4	37	4	10	2	2	2	2	8	61	40	2	21	20	5	9	229
Total	9	142	16	25	3	4	7	16	30	141	122	9	53	61	9	22	669
08:00 AM	5	32	5	2	0	1	1	4	11	60	37	2	19	21	8	4	212
08:15 AM	6	29	2	4	1	3	1	2	12	52	41	3	18	27	3	4	208
08:30 AM	1	46	7	2	2	6	3	4	9	56	38	6	19	29	3	3	234
08:45 AM	5	56	10	9	0	1	3	7	21	61	36	4	20	29	3	4	269
Total	17	163	24	17	3	11	8	17	53	229	152	15	76	106	17	15	923
*** BREAK ***																	
04:00 PM	5	75	12	2	1	4	5	2	8	51	38	4	47	66	5	10	335
04:15 PM	8	65	7	8	0	1	3	9	9	40	51	0	43	52	0	4	300
04:30 PM	3	91	16	8	0	3	4	2	7	38	28	1	19	51	1	3	275
04:45 PM	3	67	12	4	2	6	3	3	10	43	44	3	33	44	6	5	288
Total	19	298	47	22	3	14	15	16	34	172	161	8	142	213	12	22	1198
05:00 PM	4	87	21	2	0	2	0	3	10	28	23	3	41	71	12	8	315
05:15 PM	6	93	21	5	1	1	5	3	12	32	38	7	41	61	5	7	338
05:30 PM	4	56	16	5	0	1	2	4	12	40	35	1	31	41	2	7	257
05:45 PM	5	42	11	4	0	2	1	2	7	23	62	5	39	49	3	5	260
Total	19	278	69	16	1	6	8	12	41	123	158	16	152	222	22	27	1170
Grand Total	64	881	156	80	10	35	38	61	158	665	593	48	423	602	60	86	3960
Apprch %	5.4	74.6	13.2	6.8	6.9	24.3	26.4	42.4	10.8	45.4	40.5	3.3	36.1	51.4	5.1	7.3	
Total %	1.6	22.2	3.9	2	0.3	0.9	1	1.5	4	16.8	15	1.2	10.7	15.2	1.5	2.2	
AUTOS	63	866	155	80	10	35	38	61	156	647	587	48	414	592	60	86	3898
% AUTOS	98.4	98.3	99.4	100	100	100	100	100	98.7	97.3	99	100	97.9	98.3	100	100	98.4
HEAVY VEHICLES	1	15	1	0	0	0	0	0	2	18	6	0	9	10	0	0	62
% HEAVY VEHICLES	1.6	1.7	0.6	0	0	0	0	0	1.3	2.7	1	0	2.1	1.7	0	0	1.6

Crossroads Engineering

13284 SW 120th Street
Miami, FL 33186
305-233-3997

CLIENT: TRAFTECH
JOB NO.: 2013-042
PROJECT: KEY WEST CITY HALL
COUNTY: MONROE

File Name : truman ave @ white st
Site Code : 00000000
Start Date : 6/18/2013
Page No : 2

	WHITE ST From North					TRUMAN AVE From East					WHITE ST From South					TRUMAN AVE From West					
Start Time	Right	Thru	Left	Peds	App. Total	Right	Thru	Left	Peds	App. Total	Right	Thru	Left	Peds	App. Total	Right	Thru	Left	Peds	App. Total	Int. Total
Peak Hour Analysis From 07:00 AM to 08:45 AM - Peak 1 of 1																					
Peak Hour for Entire Intersection Begins at 08:00 AM																					
08:00 AM	5	32	5	2	44	0	1	1	4	6	11	60	37	2	110	19	21	**8**	**4**	52	212
08:15 AM	**6**	29	2	4	41	1	3	1	2	7	12	52	**41**	3	108	18	27	3	4	52	208
08:30 AM	1	46	7	2	56	**2**	**6**	**3**	4	**15**	9	56	38	**6**	109	19	**29**	3	3	54	234
08:45 AM	5	**56**	**10**	**9**	**80**	0	1	3	**7**	11	**21**	**61**	36	4	**122**	**20**	29	3	4	**56**	**269**
Total Volume	17	163	24	17	221	3	11	8	17	39	53	229	152	15	449	76	106	17	15	214	923
% App. Total	7.7	73.8	10.9	7.7		7.7	28.2	20.5	43.6		11.8	51	33.9	3.3		35.5	49.5	7.9	7		
PHF	.708	.728	.600	.472	.691	.375	.458	.667	.607	.650	.631	.939	.927	.625	.920	.950	.914	.531	.938	.955	.858

Crossroads Engineering

13284 SW 120th Street
Miami, FL 33186
305-233-3997

CLIENT: TRAFTECH
JOB NO.: 2013-042
PROJECT: KEY WEST CITY HALL
COUNTY: MONROE

File Name : truman ave @ white st
Site Code : 00000000
Start Date : 6/18/2013
Page No : 3

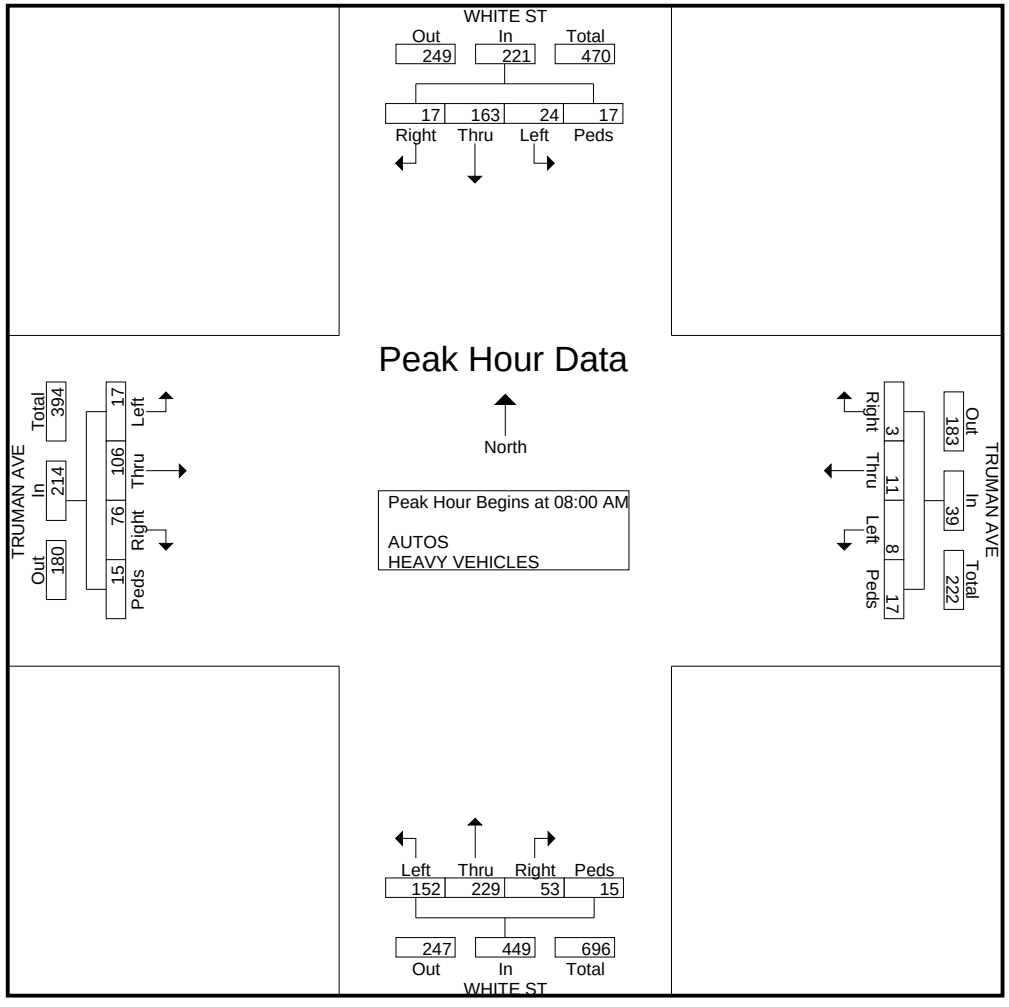

Crossroads Engineering

13284 SW 120th Street
Miami, FL 33186
305-233-3997

CLIENT: TRAFTECH
JOB NO.: 2013-042
PROJECT: KEY WEST CITY HALL
COUNTY: MONROE

File Name : truman ave @ white st
Site Code : 00000000
Start Date : 6/18/2013
Page No : 4

	WHITE ST From North					TRUMAN AVE From East					WHITE ST From South					TRUMAN AVE From West					
Start Time	Right	Thru	Left	Peds	App. Total	Right	Thru	Left	Peds	App. Total	Right	Thru	Left	Peds	App. Total	Right	Thru	Left	Peds	App. Total	Int. Total
Peak Hour Analysis From 04:00 PM to 05:45 PM - Peak 1 of 1																					
Peak Hour for Entire Intersection Begins at 04:30 PM																					
04:30 PM	3	91	16	**8**	118	0	3	4	2	9	7	38	28	1	74	19	51	1	3	74	275
04:45 PM	3	67	12	4	86	**2**	**6**	3	**3**	**14**	10	**43**	**44**	3	**100**	33	44	6	5	88	288
05:00 PM	4	87	**21**	2	114	0	2	0	3	5	10	28	23	3	64	**41**	**71**	**12**	**8**	**132**	315
05:15 PM	**6**	**93**	21	5	**125**	1	1	**5**	3	10	**12**	32	38	**7**	89	41	61	5	7	114	**338**
Total Volume	16	338	70	19	443	3	12	12	11	38	39	141	133	14	327	134	227	24	23	408	1216
% App. Total	3.6	76.3	15.8	4.3		7.9	31.6	31.6	28.9		11.9	43.1	40.7	4.3		32.8	55.6	5.9	5.6		
PHF	.667	.909	.833	.594	.886	.375	.500	.600	.917	.679	.813	.820	.756	.500	.818	.817	.799	.500	.719	.773	.899

Crossroads Engineering

13284 SW 120th Street
Miami, FL 33186
305-233-3997

CLIENT: TRAFTECH
JOB NO.: 2013-042
PROJECT: KEY WEST CITY HALL
COUNTY: MONROE

File Name : truman ave @ white st
Site Code : 00000000
Start Date : 6/18/2013
Page No : 5

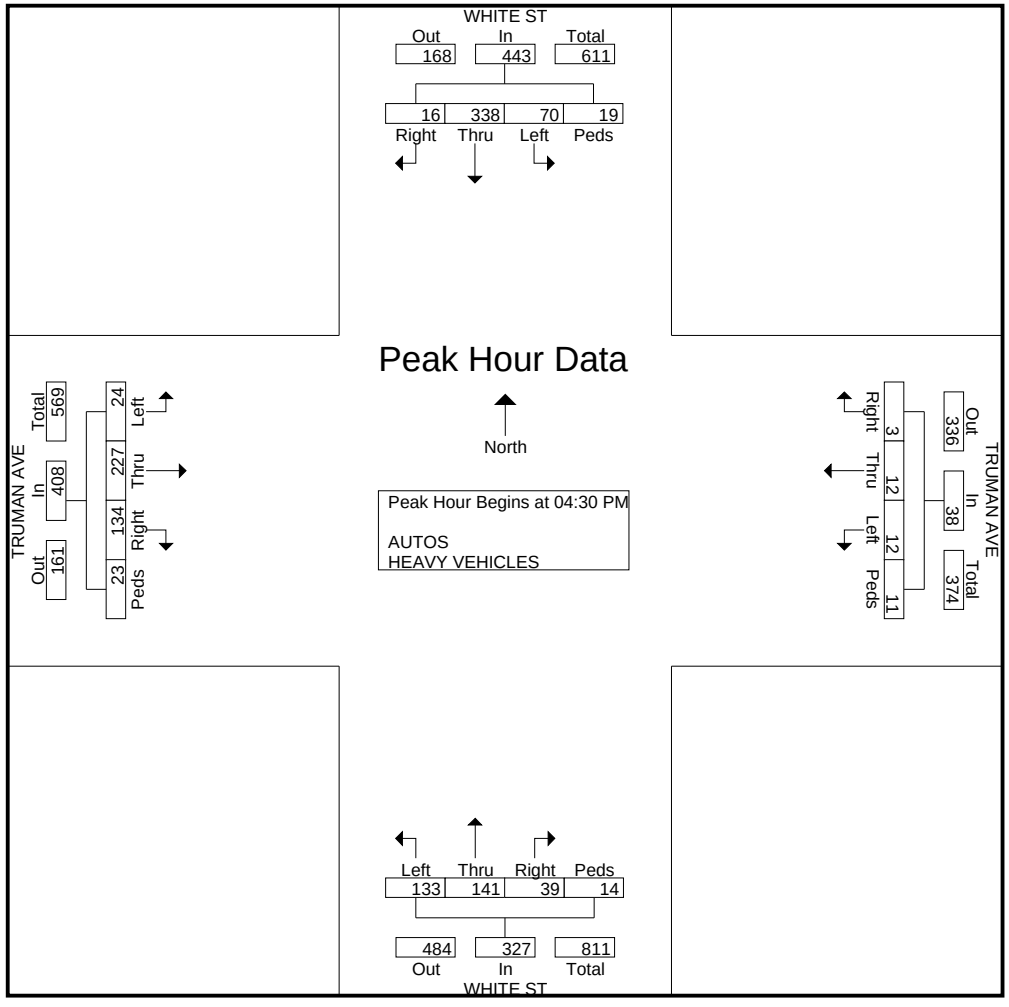

Crossroads Engineering

13284 SW 120th Street
Miami, FL 33186
305-233-3997

CLIENT: TRAFTECH
JOB NO.: 2013-042
PROJECT: KEY WEST CITY HALL
COUNTY: MONROE

File Name : united st @ white st
Site Code : 00000000
Start Date : 6/18/2013
Page No : 1

Groups Printed- AUTOS - HEAVY VEHICLES

	WHITE ST From North				UNITED ST From East				WHITE ST From South				UNITED ST From West				
Start Time	Right	Thru	Left	Peds	Right	Thru	Left	Peds	Right	Thru	Left	Peds	Right	Thru	Left	Peds	Int. Total
07:00 AM	4	33	3	0	1	3	2	0	2	27	8	0	11	6	0	0	100
07:15 AM	6	49	2	0	2	4	0	0	0	38	8	0	18	10	2	0	139
07:30 AM	5	43	5	0	3	10	2	0	1	52	11	0	15	6	5	0	158
07:45 AM	7	57	2	0	0	7	3	0	3	62	22	0	37	6	3	0	209
Total	22	182	12	0	6	24	7	0	6	179	49	0	81	28	10	0	606
08:00 AM	4	69	6	0	6	13	2	0	0	63	19	0	14	12	0	0	208
08:15 AM	8	69	7	0	3	9	1	0	2	71	19	0	14	13	8	0	224
08:30 AM	5	80	3	0	7	13	0	0	2	77	12	0	26	12	5	0	242
08:45 AM	1	64	4	0	3	12	1	0	1	67	14	0	19	15	3	4	208
Total	18	282	20	0	19	47	4	0	5	278	64	0	73	52	16	4	882
*** BREAK ***																	
04:00 PM	2	110	6	0	8	9	5	3	2	51	10	0	40	20	1	0	267
04:15 PM	4	126	2	0	8	13	1	0	1	66	3	0	53	26	2	0	305
04:30 PM	7	102	9	0	7	10	5	1	3	74	8	0	50	36	0	0	312
04:45 PM	8	109	7	0	0	10	4	0	0	67	12	0	43	34	6	0	300
Total	21	447	24	0	23	42	15	4	6	258	33	0	186	116	9	0	1184
05:00 PM	8	143	4	0	0	14	2	0	1	75	5	0	49	32	1	0	334
05:15 PM	11	149	9	0	3	8	5	0	0	68	12	0	35	23	2	4	329
05:30 PM	5	106	1	0	2	4	0	0	1	41	10	0	41	23	3	0	237
05:45 PM	3	102	5	0	2	3	3	1	2	57	12	0	34	18	3	0	245
Total	27	500	19	0	7	29	10	1	4	241	39	0	159	96	9	4	1145
Grand Total	88	1411	75	0	55	142	36	5	21	956	185	0	499	292	44	8	3817
Apprch %	5.6	89.6	4.8	0	23.1	59.7	15.1	2.1	1.8	82.3	15.9	0	59.2	34.6	5.2	0.9	
Total %	2.3	37	2	0	1.4	3.7	0.9	0.1	0.6	25	4.8	0	13.1	7.6	1.2	0.2	
AUTOS	87	1395	39	0	38	120	35	5	20	945	184	0	493	276	43	8	3688
% AUTOS	98.9	98.9	52	0	69.1	84.5	97.2	100	95.2	98.8	99.5	0	98.8	94.5	97.7	100	96.6
HEAVY VEHICLES	1	16	36	0	17	22	1	0	1	11	1	0	6	16	1	0	129
% HEAVY VEHICLES	1.1	1.1	48	0	30.9	15.5	2.8	0	4.8	1.2	0.5	0	1.2	5.5	2.3	0	3.4

Crossroads Engineering

13284 SW 120th Street
Miami, FL 33186
305-233-3997

CLIENT: TRAFTECH
JOB NO.: 2013-042
PROJECT: KEY WEST CITY HALL
COUNTY: MONROE

File Name : united st @ white st
Site Code : 00000000
Start Date : 6/18/2013
Page No : 2

	WHITE ST From North					UNITED ST From East					WHITE ST From South					UNITED ST From West					
Start Time	Right	Thru	Left	Peds	App. Total	Right	Thru	Left	Peds	App. Total	Right	Thru	Left	Peds	App. Total	Right	Thru	Left	Peds	App. Total	Int. Total
Peak Hour Analysis From 07:00 AM to 08:45 AM - Peak 1 of 1																					
Peak Hour for Entire Intersection Begins at 07:45 AM																					
07:45 AM	7	57	2	0	66	0	7	**3**	0	10	**3**	62	**22**	0	87	**37**	6	3	0	**46**	209
08:00 AM	4	69	6	0	79	6	**13**	2	0	**21**	0	63	19	0	82	14	12	0	0	26	208
08:15 AM	**8**	69	**7**	0	84	3	9	1	0	13	2	71	19	0	**92**	14	**13**	**8**	0	35	224
08:30 AM	5	**80**	3	0	**88**	**7**	13	0	0	20	2	**77**	12	0	91	26	12	5	0	43	**242**
Total Volume	24	275	18	0	317	16	42	6	0	64	7	273	72	0	352	91	43	16	0	150	883
% App. Total	7.6	86.8	5.7	0		25	65.6	9.4	0		2	77.6	20.5	0		60.7	28.7	10.7	0		
PHF	.750	.859	.643	.000	.901	.571	.808	.500	.000	.762	.583	.886	.818	.000	.957	.615	.827	.500	.000	.815	.912

Crossroads Engineering

13284 SW 120th Street
Miami, FL 33186
305-233-3997

CLIENT: TRAFTECH
JOB NO.: 2013-042
PROJECT: KEY WEST CITY HALL
COUNTY: MONROE

File Name : united st @ white st
Site Code : 00000000
Start Date : 6/18/2013
Page No : 3

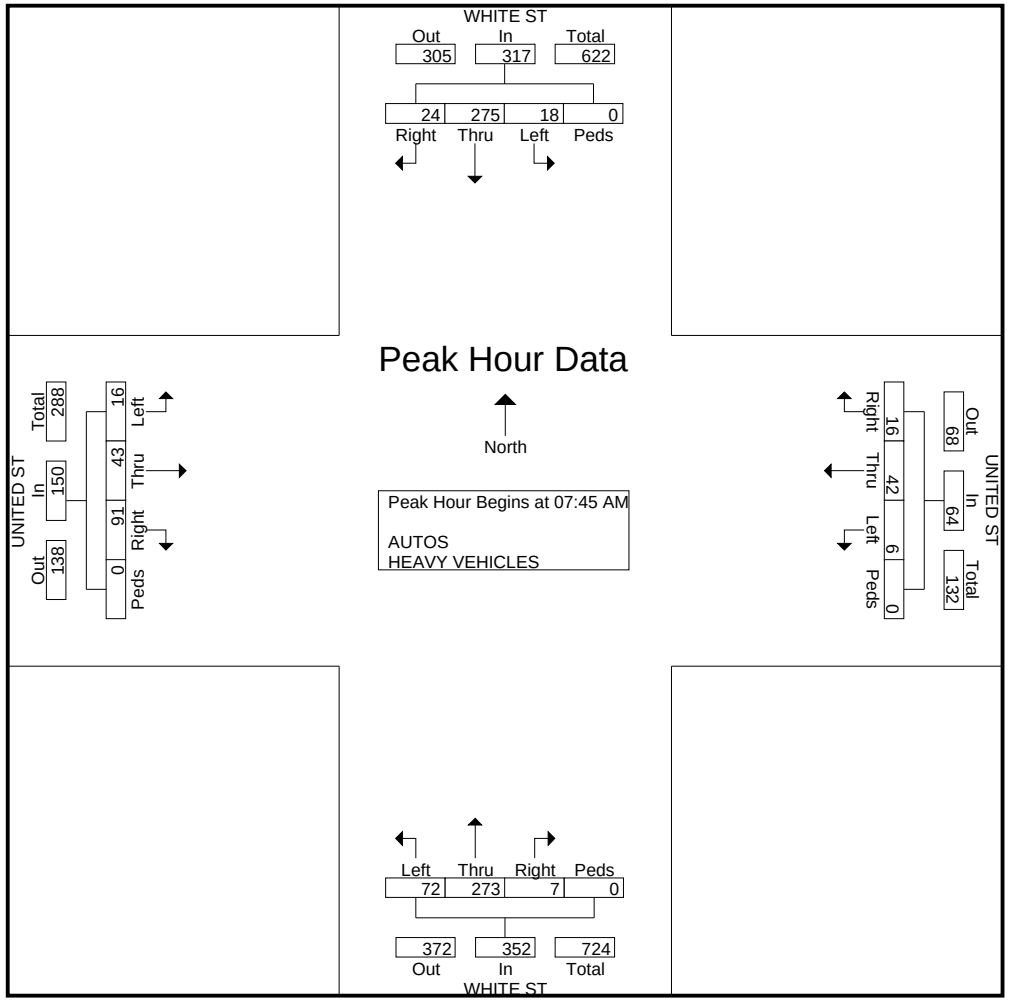

Crossroads Engineering

13284 SW 120th Street
Miami, FL 33186
305-233-3997

CLIENT: TRAFTECH
JOB NO.: 2013-042
PROJECT: KEY WEST CITY HALL
COUNTY: MONROE

File Name : united st @ white st
Site Code : 00000000
Start Date : 6/18/2013
Page No : 4

	WHITE ST From North					UNITED ST From East					WHITE ST From South					UNITED ST From West					
Start Time	Right	Thru	Left	Peds	App. Total	Right	Thru	Left	Peds	App. Total	Right	Thru	Left	Peds	App. Total	Right	Thru	Left	Peds	App. Total	Int. Total
Peak Hour Analysis From 04:00 PM to 05:45 PM - Peak 1 of 1																					
Peak Hour for Entire Intersection Begins at 04:30 PM																					
04:30 PM	7	102	**9**	0	118	**7**	10	**5**	**1**	**23**	**3**	74	8	0	**85**	**50**	**36**	0	0	**86**	312
04:45 PM	8	109	7	0	124	0	10	4	0	14	0	67	**12**	0	79	43	34	**6**	0	83	300
05:00 PM	8	143	4	0	155	0	**14**	2	0	16	1	**75**	5	0	81	49	32	1	0	82	**334**
05:15 PM	**11**	**149**	9	0	**169**	3	8	5	0	16	0	68	12	0	80	35	23	2	**4**	64	329
Total Volume	34	503	29	0	566	10	42	16	1	69	4	284	37	0	325	177	125	9	4	315	1275
% App. Total	6	88.9	5.1	0		14.5	60.9	23.2	1.4		1.2	87.4	11.4	0		56.2	39.7	2.9	1.3		
PHF	.773	.844	.806	.000	.837	.357	.750	.800	.250	.750	.333	.947	.771	.000	.956	.885	.868	.375	.250	.916	.954

Crossroads Engineering

13284 SW 120th Street
Miami, FL 33186
305-233-3997

CLIENT: TRAFTECH
JOB NO.: 2013-042
PROJECT: KEY WEST CITY HALL
COUNTY: MONROE

File Name : united st @ white st
Site Code : 00000000
Start Date : 6/18/2013
Page No : 5

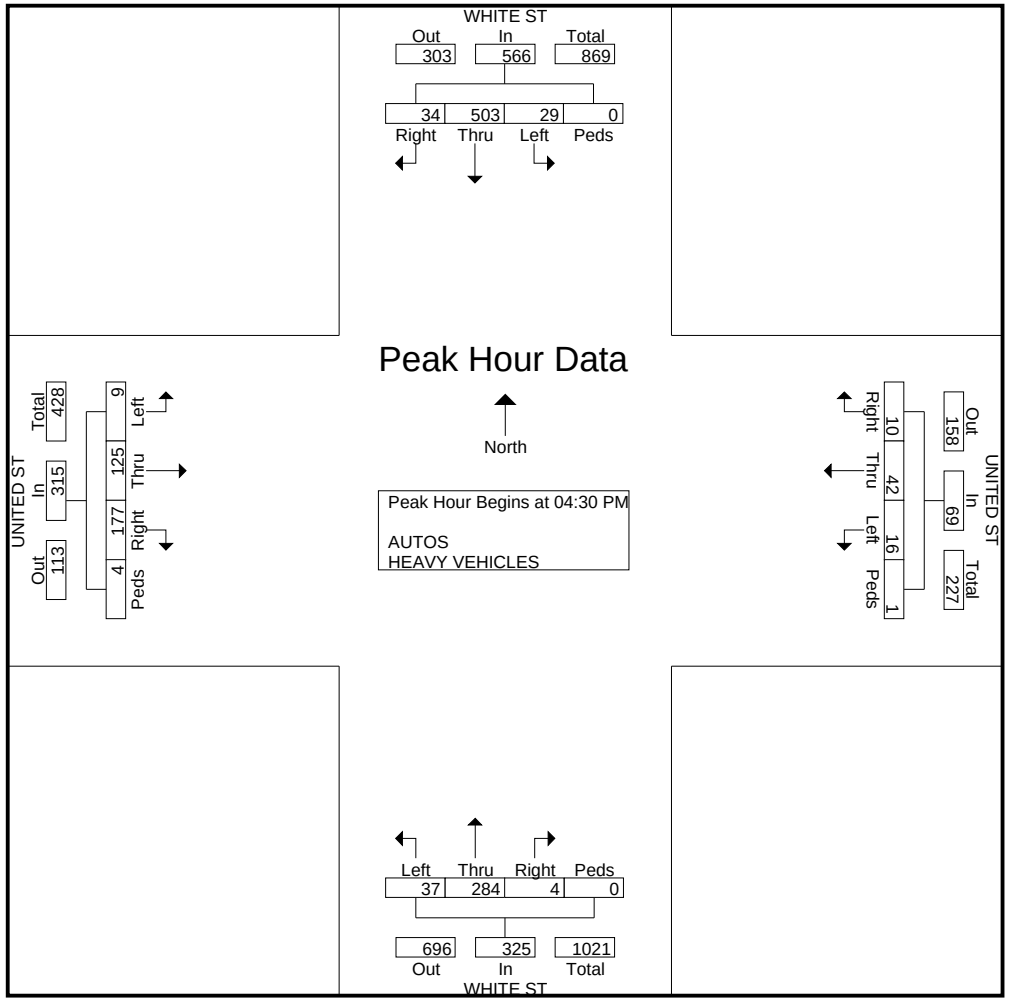

Crossroads Engineering

13284 SW 120th Street
Miami, FL 33186
305-233-3997

CLIENT: TRAFTECH
JOB NO.: 2013-042
PROJECT: KEY WEST CITY HALL
COUNTY: MONROE

File Name : SEMINARY ST @ WHITE ST
Site Code : 00000000
Start Date : 6/18/2013
Page No : 1

Groups Printed- AUTOS - HEAVY VEHICLES

	WHITE ST From North				SEMINARY ST From East				WHITE ST From South				SEMINARY ST From West				
Start Time	Right	Thru	Left	Peds	Right	Thru	Left	Peds	Right	Thru	Left	Peds	Right	Thru	Left	Peds	Int. Total
07:00 AM	0	54	0	2	0	0	0	1	0	41	0	0	0	0	0	5	103
07:15 AM	1	57	1	0	2	1	0	0	3	40	0	0	1	0	0	0	106
07:30 AM	1	60	1	0	8	2	0	0	0	57	1	0	0	0	0	0	130
07:45 AM	5	85	5	0	8	4	1	0	0	88	9	0	1	0	2	0	208
Total	7	256	7	2	18	7	1	1	3	226	10	0	2	0	2	5	547
08:00 AM	3	78	4	1	7	2	1	0	0	87	7	0	1	0	0	0	191
08:15 AM	3	82	1	0	6	2	0	0	0	76	5	0	0	0	0	0	175
08:30 AM	2	93	1	0	6	1	1	0	3	68	7	0	3	1	0	0	186
08:45 AM	4	91	3	0	8	1	0	0	1	85	5	0	4	1	3	0	206
Total	12	344	9	1	27	6	2	0	4	316	24	0	8	2	3	0	758
*** BREAK ***																	
04:00 PM	0	166	5	0	6	5	1	0	1	74	2	0	0	1	1	0	262
04:15 PM	1	94	4	0	3	0	0	0	0	34	2	0	0	1	0	0	139
04:30 PM	3	205	7	0	4	0	1	0	2	82	3	0	1	0	0	0	308
04:45 PM	1	157	7	0	6	3	1	0	0	78	3	0	2	4	2	0	264
Total	5	622	23	0	19	8	3	0	3	268	10	0	3	6	3	0	973
05:00 PM	4	167	3	0	1	0	2	0	0	61	4	0	2	0	2	0	246
05:15 PM	3	163	3	0	4	0	0	0	1	88	7	0	3	1	2	0	275
05:30 PM	0	177	1	1	5	1	0	0	2	67	4	0	0	2	2	0	262
05:45 PM	4	124	5	0	4	2	2	0	1	59	4	0	3	0	0	0	208
Total	11	631	12	1	14	3	4	0	4	275	19	0	8	3	6	0	991
Grand Total	35	1853	51	4	78	24	10	1	14	1085	63	0	21	11	14	5	3269
Apprch %	1.8	95.4	2.6	0.2	69	21.2	8.8	0.9	1.2	93.4	5.4	0	41.2	21.6	27.5	9.8	
Total %	1.1	56.7	1.6	0.1	2.4	0.7	0.3	0	0.4	33.2	1.9	0	0.6	0.3	0.4	0.2	
AUTOS	35	1853	51	4	78	24	10	1	14	1085	63	0	21	11	14	5	3269
% AUTOS	100	100	100	100	100	100	100	100	100	100	100	0	100	100	100	100	100
HEAVY VEHICLES	0	0	0	0	0	0	0	0	0	0	0	0	0	0	0	0	0
% HEAVY VEHICLES	0	0	0	0	0	0	0	0	0	0	0	0	0	0	0	0	0

Crossroads Engineering

13284 SW 120th Street
Miami, FL 33186
305-233-3997

CLIENT: TRAFTECH
JOB NO.: 2013-042
PROJECT: KEY WEST CITY HALL
COUNTY: MONROE

File Name : SEMINARY ST @ WHITE ST
Site Code : 00000000
Start Date : 6/18/2013
Page No : 2

	WHITE ST From North					SEMINARY ST From East					WHITE ST From South					SEMINARY ST From West					
Start Time	Right	Thru	Left	Peds	App. Total	Right	Thru	Left	Peds	App. Total	Right	Thru	Left	Peds	App. Total	Right	Thru	Left	Peds	App. Total	Int. Total
Peak Hour Analysis From 07:00 AM to 08:45 AM - Peak 1 of 1																					
Peak Hour for Entire Intersection Begins at 07:45 AM																					
07:45 AM	**5**	85	**5**	0	95	**8**	**4**	**1**	0	**13**	0	**88**	**9**	0	**97**	1	0	**2**	0	3	**208**
08:00 AM	3	78	4	**1**	86	7	2	1	0	10	0	87	7	0	94	1	0	0	0	1	191
08:15 AM	3	82	1	0	86	6	2	0	0	8	0	76	5	0	81	0	0	0	0	0	175
08:30 AM	2	**93**	1	0	**96**	6	1	1	0	8	**3**	68	7	0	78	**3**	**1**	0	0	**4**	186
Total Volume	13	338	11	1	363	27	9	3	0	39	3	319	28	0	350	5	1	2	0	8	760
% App. Total	3.6	93.1	3	0.3		69.2	23.1	7.7	0		0.9	91.1	8	0		62.5	12.5	25	0		
PHF	.650	.909	.550	.250	.945	.844	.563	.750	.000	.750	.250	.906	.778	.000	.902	.417	.250	.250	.000	.500	.913

Crossroads Engineering

13284 SW 120th Street
Miami, FL 33186
305-233-3997

CLIENT: TRAFTECH
JOB NO.: 2013-042
PROJECT: KEY WEST CITY HALL
COUNTY: MONROE

File Name : SEMINARY ST @ WHITE ST
Site Code : 00000000
Start Date : 6/18/2013
Page No : 3

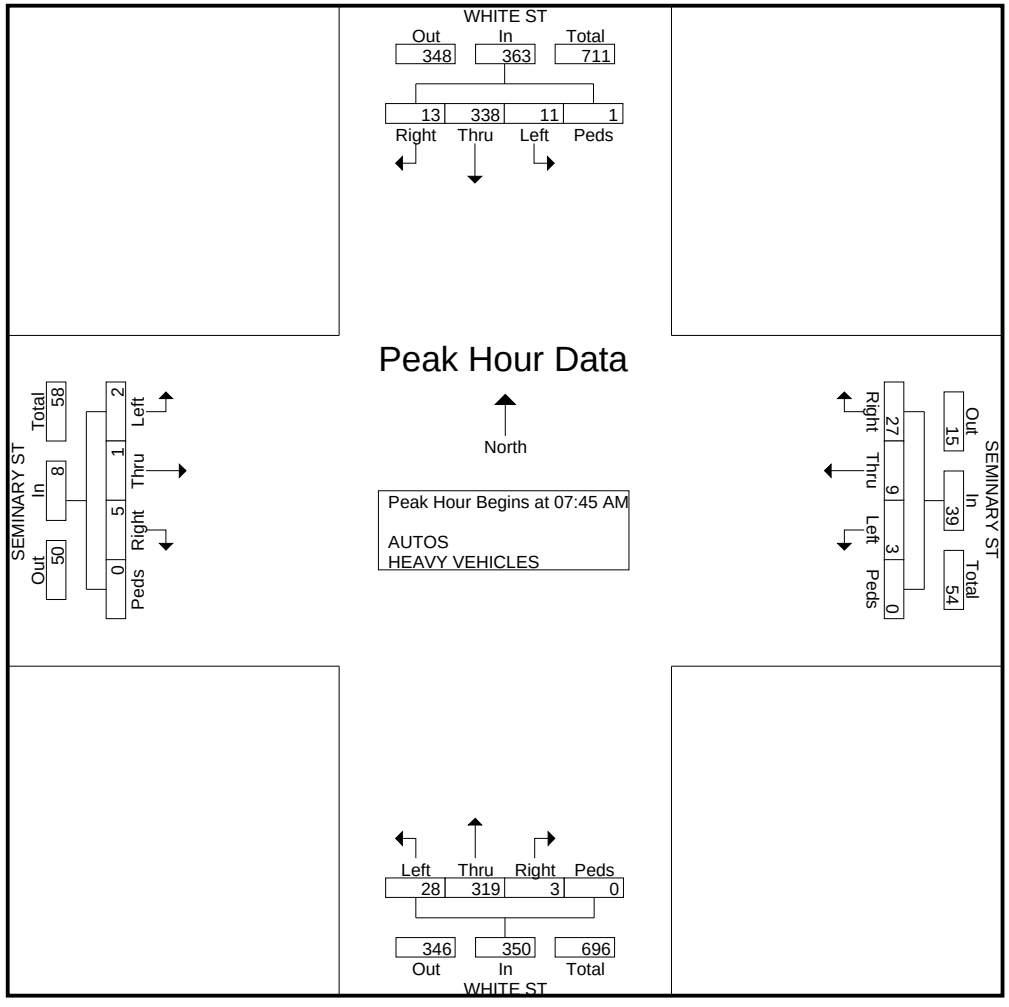

Crossroads Engineering

13284 SW 120th Street
Miami, FL 33186
305-233-3997

CLIENT: TRAFTECH
JOB NO.: 2013-042
PROJECT: KEY WEST CITY HALL
COUNTY: MONROE

File Name : SEMINARY ST @ WHITE ST
Site Code : 00000000
Start Date : 6/18/2013
Page No : 4

	WHITE ST From North					SEMINARY ST From East					WHITE ST From South					SEMINARY ST From West					
Start Time	Right	Thru	Left	Peds	App. Total	Right	Thru	Left	Peds	App. Total	Right	Thru	Left	Peds	App. Total	Right	Thru	Left	Peds	App. Total	Int. Total
Peak Hour Analysis From 04:00 PM to 05:45 PM - Peak 1 of 1																					
Peak Hour for Entire Intersection Begins at 04:30 PM																					
04:30 PM	3	**205**	**7**	0	**215**	4	0	1	0	5	**2**	82	3	0	87	1	0	0	0	1	**308**
04:45 PM	1	157	7	0	165	**6**	**3**	1	0	**10**	0	78	3	0	81	2	**4**	**2**	0	**8**	264
05:00 PM	**4**	167	3	0	174	1	0	**2**	0	3	0	61	4	0	65	2	0	2	0	4	246
05:15 PM	3	163	3	0	169	4	0	0	0	4	1	**88**	**7**	0	**96**	**3**	1	2	0	6	275
Total Volume	11	692	20	0	723	15	3	4	0	22	3	309	17	0	329	8	5	6	0	19	1093
% App. Total	1.5	95.7	2.8	0		68.2	13.6	18.2	0		0.9	93.9	5.2	0		42.1	26.3	31.6	0		
PHF	.688	.844	.714	.000	.841	.625	.250	.500	.000	.550	.375	.878	.607	.000	.857	.667	.313	.750	.000	.594	.887

Crossroads Engineering

13284 SW 120th Street
Miami, FL 33186
305-233-3997

CLIENT: TRAFTECH
JOB NO.: 2013-042
PROJECT: KEY WEST CITY HALL
COUNTY: MONROE

File Name : SEMINARY ST @ WHITE ST
Site Code : 00000000
Start Date : 6/18/2013
Page No : 5

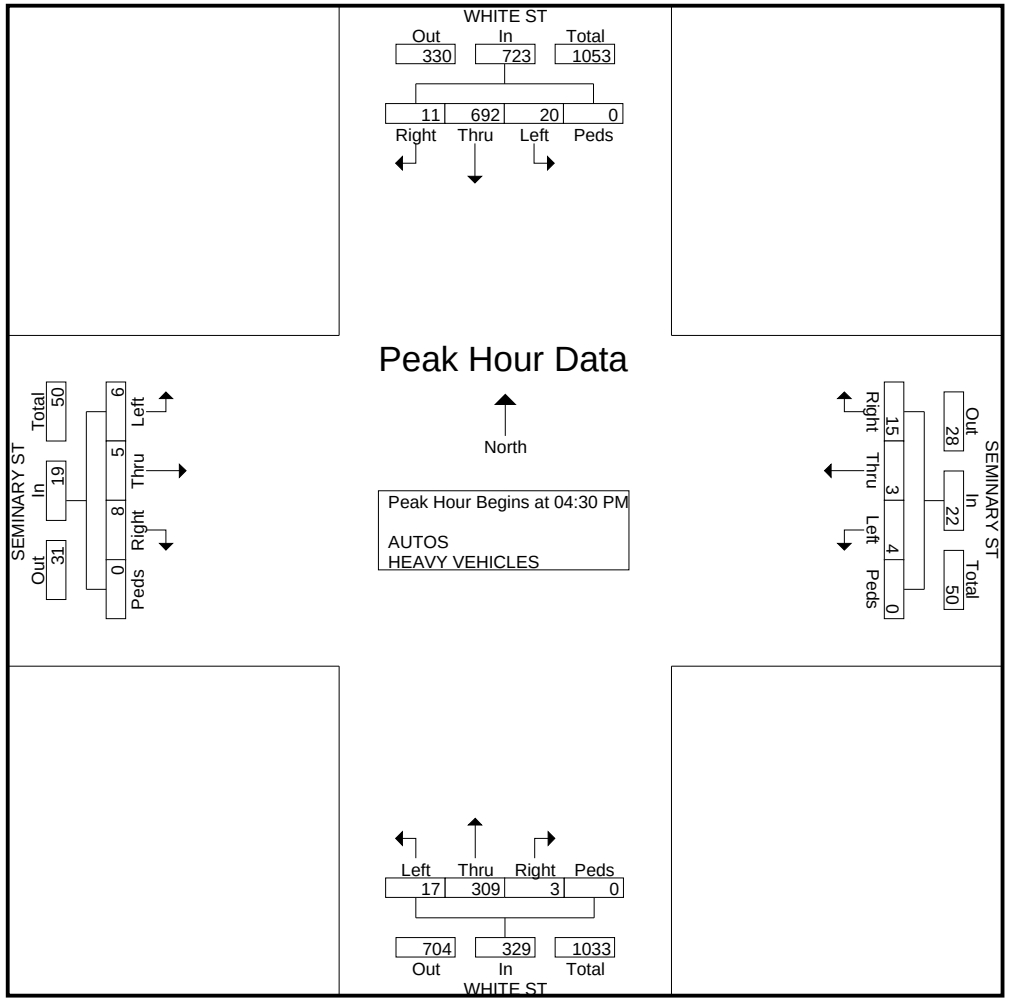

Crossroads Engineering

13284 SW 120th Street
Miami, FL 33186
305-233-3997

CLIENT: TRAF TECH
JOB NO.: 2013-053
PROJECT: KEY WEST CITY HALL
COUNTY: MONROE

File Name : SOUTH ST @ WHITE ST
Site Code : 00000000
Start Date : 7/31/2013
Page No : 1

Groups Printed- AUTOS - HEAVY VEHICLES

	WHITE ST From North				SOUTH ST From East				WHITE ST From South				SOUTH ST From West				
Start Time	Right	Thru	Left	Peds	Right	Thru	Left	Peds	Right	Thru	Left	Peds	Right	Thru	Left	Peds	Int. Total
07:00 AM	0	57	1	0	1	0	1	8	0	39	2	1	2	0	1	7	120
07:15 AM	0	32	0	1	1	1	0	9	0	57	1	0	3	1	0	4	110
07:30 AM	1	59	2	4	3	2	0	8	0	57	5	1	2	1	9	10	164
07:45 AM	0	64	0	2	6	6	0	6	0	93	6	1	4	1	2	9	200
Total	1	212	3	7	11	9	1	31	0	246	14	3	11	3	12	30	594
08:00 AM	2	66	1	0	2	1	1	0	0	92	6	2	8	2	5	5	193
08:15 AM	3	65	1	2	3	2	1	4	2	78	3	2	10	4	4	9	193
08:30 AM	2	81	6	3	3	3	1	9	1	71	8	0	7	3	1	7	206
08:45 AM	3	80	2	0	4	3	0	5	1	98	4	3	13	0	3	9	228
Total	10	292	10	5	12	9	3	18	4	339	21	7	38	9	13	30	820
*** BREAK ***																	
04:00 PM	3	153	5	2	3	1	0	4	0	66	6	1	15	4	6	4	273
04:15 PM	0	131	5	2	3	3	2	4	0	75	3	3	14	3	3	7	258
04:30 PM	3	136	8	2	3	0	1	3	1	70	4	1	5	5	4	3	249
04:45 PM	0	94	3	1	1	0	0	4	1	70	9	1	18	2	3	4	211
Total	6	514	21	7	10	4	3	15	2	281	22	6	52	14	16	18	991
05:00 PM	3	127	7	0	1	1	0	5	2	73	3	1	21	5	4	4	257
05:15 PM	3	156	4	0	3	1	1	1	1	72	3	0	19	5	3	6	278
05:30 PM	4	116	2	7	2	1	0	6	0	65	3	1	7	3	6	6	229
05:45 PM	0	101	3	1	2	2	0	2	1	76	8	1	8	3	3	7	218
Total	10	500	16	8	8	5	1	14	4	286	17	3	55	16	16	23	982
Grand Total	27	1518	50	27	41	27	8	78	10	1152	74	19	156	42	57	101	3387
Apprch %	1.7	93.6	3.1	1.7	26.6	17.5	5.2	50.6	0.8	91.8	5.9	1.5	43.8	11.8	16	28.4	
Total %	0.8	44.8	1.5	0.8	1.2	0.8	0.2	2.3	0.3	34	2.2	0.6	4.6	1.2	1.7	3	
AUTOS	27	1480	50	27	41	26	6	78	10	1138	72	19	156	40	57	101	3328
% AUTOS	100	97.5	100	100	100	96.3	75	100	100	98.8	97.3	100	100	95.2	100	100	98.3
HEAVY VEHICLES	0	38	0	0	0	1	2	0	0	14	2	0	0	2	0	0	59
% HEAVY VEHICLES	0	2.5	0	0	0	3.7	25	0	0	1.2	2.7	0	0	4.8	0	0	1.7

Crossroads Engineering

13284 SW 120th Street
Miami, FL 33186
305-233-3997

CLIENT: TRAF TECH
JOB NO.: 2013-053
PROJECT: KEY WEST CITY HALL
COUNTY: MONROE

File Name : SOUTH ST @ WHITE ST
Site Code : 00000000
Start Date : 7/31/2013
Page No : 2

	WHITE ST From North					SOUTH ST From East					WHITE ST From South					SOUTH ST From West					
Start Time	Right	Thru	Left	Peds	App. Total	Right	Thru	Left	Peds	App. Total	Right	Thru	Left	Peds	App. Total	Right	Thru	Left	Peds	App. Total	Int. Total
Peak Hour Analysis From 07:00 AM to 08:45 AM - Peak 1 of 1																					
Peak Hour for Entire Intersection Begins at 08:00 AM																					
08:00 AM	2	66	1	0	69	2	1	**1**	0	4	0	92	6	2	100	8	2	**5**	5	20	193
08:15 AM	**3**	65	1	2	71	3	2	1	4	10	**2**	78	3	2	85	10	**4**	4	**9**	**27**	193
08:30 AM	2	**81**	**6**	**3**	**92**	3	**3**	1	**9**	**16**	1	71	**8**	0	80	7	3	1	7	18	206
08:45 AM	3	80	2	0	85	**4**	3	0	5	12	1	**98**	4	**3**	**106**	**13**	0	3	9	25	**228**
Total Volume	10	292	10	5	317	12	9	3	18	42	4	339	21	7	371	38	9	13	30	90	820
% App. Total	3.2	92.1	3.2	1.6		28.6	21.4	7.1	42.9		1.1	91.4	5.7	1.9		42.2	10	14.4	33.3		
PHF	.833	.901	.417	.417	.861	.750	.750	.750	.500	.656	.500	.865	.656	.583	.875	.731	.563	.650	.833	.833	.899

Crossroads Engineering

13284 SW 120th Street
Miami, FL 33186
305-233-3997

CLIENT: TRAF TECH
JOB NO.: 2013-053
PROJECT: KEY WEST CITY HALL
COUNTY: MONROE

File Name : SOUTH ST @ WHITE ST
Site Code : 00000000
Start Date : 7/31/2013
Page No : 3

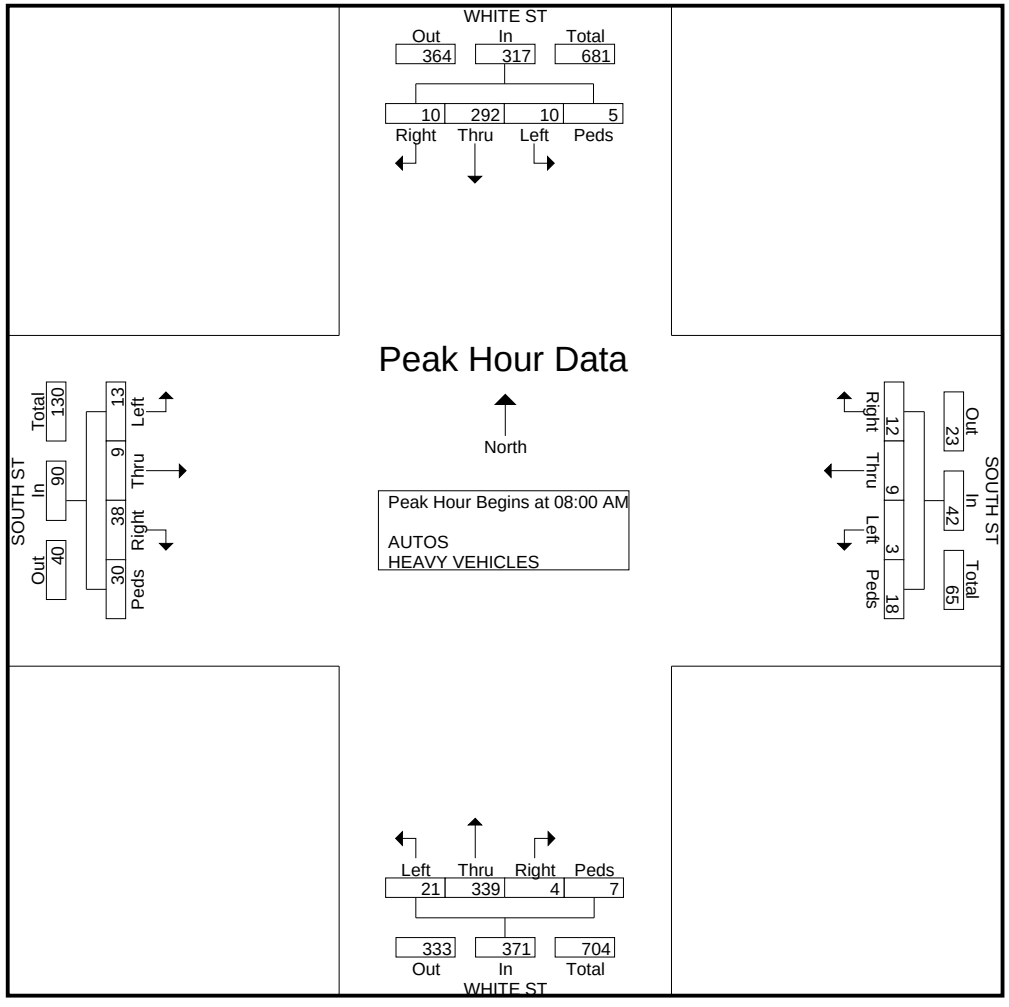

Crossroads Engineering

13284 SW 120th Street
Miami, FL 33186
305-233-3997

CLIENT: TRAF TECH
JOB NO.: 2013-053
PROJECT: KEY WEST CITY HALL
COUNTY: MONROE

File Name : SOUTH ST @ WHITE ST
Site Code : 00000000
Start Date : 7/31/2013
Page No : 4

	WHITE ST From North					SOUTH ST From East					WHITE ST From South					SOUTH ST From West					
Start Time	Right	Thru	Left	Peds	App. Total	Right	Thru	Left	Peds	App. Total	Right	Thru	Left	Peds	App. Total	Right	Thru	Left	Peds	App. Total	Int. Total
Peak Hour Analysis From 04:00 PM to 05:45 PM - Peak 1 of 1																					
Peak Hour for Entire Intersection Begins at 04:30 PM																					
04:30 PM	**3**	136	**8**	**2**	149	**3**	0	**1**	3	**7**	1	70	4	**1**	76	5	**5**	**4**	3	17	249
04:45 PM	0	94	3	1	98	1	0	0	4	5	1	70	**9**	1	**81**	18	2	3	4	27	211
05:00 PM	3	127	7	0	137	1	**1**	0	**5**	7	**2**	**73**	3	1	79	**21**	5	4	4	**34**	257
05:15 PM	3	**156**	4	0	**163**	3	1	1	1	6	1	72	3	0	76	19	5	3	**6**	33	**278**
Total Volume	9	513	22	3	547	8	2	2	13	25	5	285	19	3	312	63	17	14	17	111	995
% App. Total	1.6	93.8	4	0.5		32	8	8	52		1.6	91.3	6.1	1		56.8	15.3	12.6	15.3		
PHF	.750	.822	.688	.375	.839	.667	.500	.500	.650	.893	.625	.976	.528	.750	.963	.750	.850	.875	.708	.816	.895

Crossroads Engineering

13284 SW 120th Street
Miami, FL 33186
305-233-3997

CLIENT: TRAF TECH
JOB NO.: 2013-053
PROJECT: KEY WEST CITY HALL
COUNTY: MONROE

File Name : SOUTH ST @ WHITE ST
Site Code : 00000000
Start Date : 7/31/2013
Page No : 5

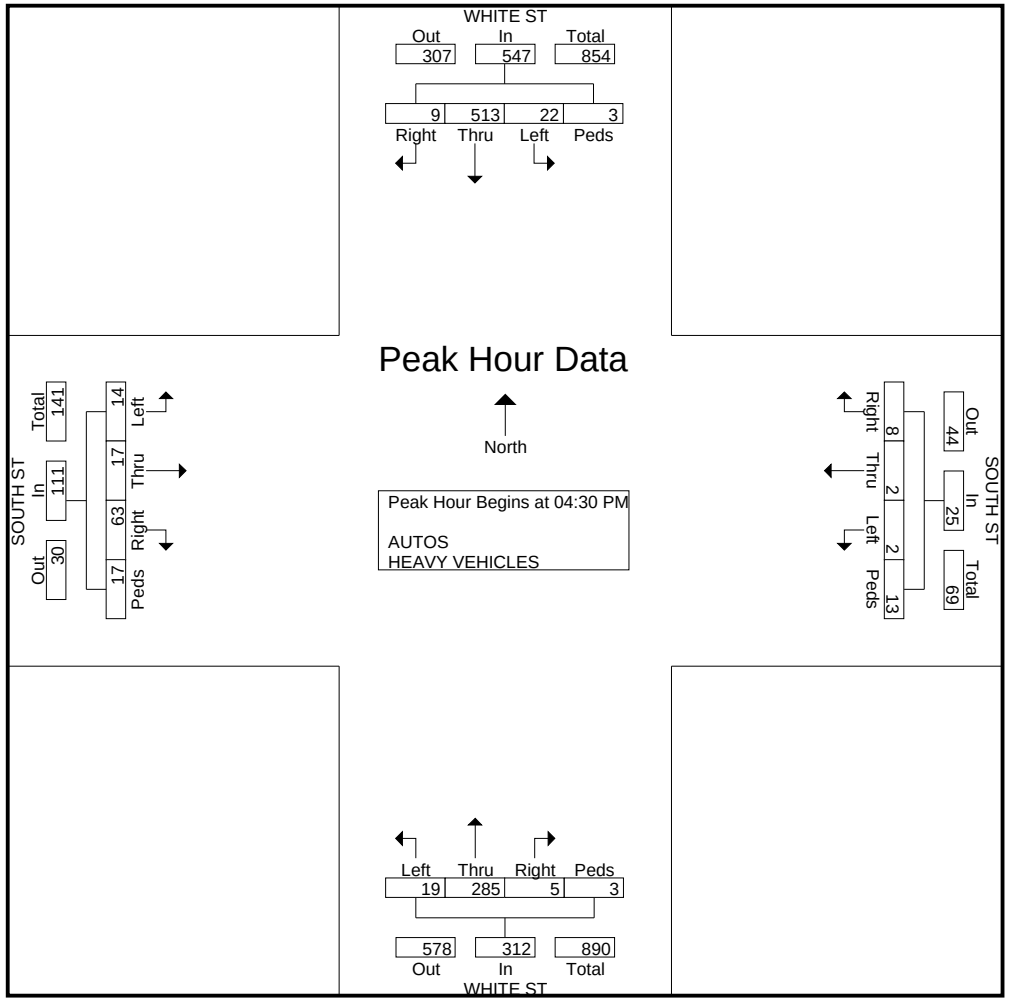

Crossroads Engineering

13284 SW 120th Street
Miami, FL 33186
305-233-3997

CLIENT: TRAF TECH
JOB NO.: 2013-053
PROJECT: KEY WEST CITY HALL
COUNTY: MONROE

File Name : SOUTH ST @ WHITE ST
Site Code : 00000000
Start Date : 7/31/2013
Page No : 1

Groups Printed- HEAVY VEHICLES

	WHITE ST From North				SOUTH ST From East				WHITE ST From South				SOUTH ST From West				
Start Time	Right	Thru	Left	Peds	Right	Thru	Left	Peds	Right	Thru	Left	Peds	Right	Thru	Left	Peds	Int. Total
07:00 AM	0	2	0	0	0	0	0	0	0	0	0	0	0	0	0	0	2
07:15 AM	0	2	0	0	0	0	0	0	0	0	1	0	0	0	0	0	3
07:30 AM	0	4	0	0	0	0	0	0	0	2	0	0	0	0	0	0	6
07:45 AM	0	2	0	0	0	0	0	0	0	2	0	0	0	0	0	0	4
Total	0	10	0	0	0	0	0	0	0	4	1	0	0	0	0	0	15
08:00 AM	0	1	0	0	0	0	1	0	0	3	1	0	0	0	0	0	6
08:15 AM	0	5	0	0	0	0	0	0	0	1	0	0	0	1	0	0	7
08:30 AM	0	1	0	0	0	0	1	0	0	1	0	0	0	1	0	0	4
*** BREAK ***																	
Total	0	7	0	0	0	0	2	0	0	5	1	0	0	2	0	0	17
*** BREAK ***																	
04:00 PM	0	5	0	0	0	0	0	0	0	2	0	0	0	0	0	0	7
04:15 PM	0	7	0	0	0	1	0	0	0	1	0	0	0	0	0	0	9
*** BREAK ***																	
04:45 PM	0	3	0	0	0	0	0	0	0	0	0	0	0	0	0	0	3
Total	0	15	0	0	0	1	0	0	0	3	0	0	0	0	0	0	19
05:00 PM	0	0	0	0	0	0	0	0	0	1	0	0	0	0	0	0	1
05:15 PM	0	2	0	0	0	0	0	0	0	0	0	0	0	0	0	0	2
05:30 PM	0	3	0	0	0	0	0	0	0	1	0	0	0	0	0	0	4
05:45 PM	0	1	0	0	0	0	0	0	0	0	0	0	0	0	0	0	1
Total	0	6	0	0	0	0	0	0	0	2	0	0	0	0	0	0	8
Grand Total	0	38	0	0	0	1	2	0	0	14	2	0	0	2	0	0	59
Apprch %	0	100	0	0	0	33.3	66.7	0	0	87.5	12.5	0	0	100	0	0	
Total %	0	64.4	0	0	0	1.7	3.4	0	0	23.7	3.4	0	0	3.4	0	0	

Crossroads Engineering

13284 SW 120th Street
Miami, FL 33186
305-233-3997

CLIENT: TRAFTECH
JOB NO.: 2013-042
PROJECT: KEY WEST CITY HALL
COUNTY: MONROE

File Name : FLAGLER AVE @ WHITE ST
Site Code : 00000000
Start Date : 6/18/2013
Page No : 1

Groups Printed- AUTOS - HEAVY VEHICLES

	WHITE ST From North				FLAGLER AVE From East				WHITE ST From South				FLAGLER AVE From West				
Start Time	Right	Thru	Left	Peds	Right	Thru	Left	Peds	Right	Thru	Left	Peds	Right	Thru	Left	Peds	Int. Total
07:00 AM	0	17	36	0	15	17	0	3	1	13	0	0	0	18	1	1	122
07:15 AM	0	25	38	0	23	20	1	6	1	15	3	1	1	6	2	6	148
07:30 AM	1	21	30	1	38	36	1	7	1	27	1	2	2	27	1	1	197
07:45 AM	3	28	47	0	46	45	1	4	2	44	0	2	6	20	1	9	258
Total	4	91	151	1	122	118	3	20	5	99	4	5	9	71	5	17	725
08:00 AM	0	26	52	0	41	43	2	6	5	32	4	1	1	17	0	7	237
08:15 AM	1	36	34	1	43	22	3	6	2	27	3	3	3	14	1	3	202
08:30 AM	0	31	52	0	54	30	7	4	2	28	2	3	2	16	3	3	237
08:45 AM	1	51	67	0	57	41	1	10	2	33	0	0	4	15	0	10	292
Total	2	144	205	1	195	136	13	26	11	120	9	7	10	62	4	23	968
*** BREAK ***																	
04:00 PM	3	68	82	1	32	35	2	3	0	23	2	0	13	43	4	2	313
04:15 PM	2	80	90	2	42	29	2	7	2	27	0	0	8	38	2	11	342
04:30 PM	1	82	68	1	47	29	2	2	0	24	2	2	11	53	2	5	331
04:45 PM	3	80	72	0	42	36	2	1	3	18	2	1	14	36	3	5	318
Total	9	310	312	4	163	129	8	13	5	92	6	3	46	170	11	23	1304
05:00 PM	5	69	86	0	46	25	4	4	1	29	0	2	23	51	4	12	361
05:15 PM	1	74	85	1	45	41	4	2	1	26	2	2	9	47	1	11	352
05:30 PM	0	77	77	1	38	27	1	4	2	28	2	1	11	30	1	10	310
05:45 PM	1	44	66	3	31	24	5	7	0	19	4	0	6	32	1	8	251
Total	7	264	314	5	160	117	14	17	4	102	8	5	49	160	7	41	1274
Grand Total	22	809	982	11	640	500	38	76	25	413	27	20	114	463	27	104	4271
Apprch %	1.2	44.4	53.8	0.6	51	39.9	3	6.1	5.2	85.2	5.6	4.1	16.1	65.4	3.8	14.7	
Total %	0.5	18.9	23	0.3	15	11.7	0.9	1.8	0.6	9.7	0.6	0.5	2.7	10.8	0.6	2.4	
AUTOS	21	793	946	11	623	478	37	76	24	402	26	20	108	447	26	104	4142
% AUTOS	95.5	98	96.3	100	97.3	95.6	97.4	100	96	97.3	96.3	100	94.7	96.5	96.3	100	97
HEAVY VEHICLES	1	16	36	0	17	22	1	0	1	11	1	0	6	16	1	0	129
% HEAVY VEHICLES	4.5	2	3.7	0	2.7	4.4	2.6	0	4	2.7	3.7	0	5.3	3.5	3.7	0	3

Crossroads Engineering

13284 SW 120th Street
Miami, FL 33186
305-233-3997

CLIENT: TRAFTECH
JOB NO.: 2013-042
PROJECT: KEY WEST CITY HALL
COUNTY: MONROE

File Name : FLAGLER AVE @ WHITE ST
Site Code : 00000000
Start Date : 6/18/2013
Page No : 2

	WHITE ST From North					FLAGLER AVE From East					WHITE ST From South					FLAGLER AVE From West					
Start Time	Right	Thru	Left	Peds	App. Total	Right	Thru	Left	Peds	App. Total	Right	Thru	Left	Peds	App. Total	Right	Thru	Left	Peds	App. Total	Int. Total
Peak Hour Analysis From 07:00 AM to 08:45 AM - Peak 1 of 1																					
Peak Hour for Entire Intersection Begins at 08:00 AM																					
08:00 AM	0	26	52	0	78	41	**43**	2	6	92	**5**	32	**4**	1	**42**	1	**17**	0	7	25	237
08:15 AM	**1**	36	34	**1**	72	43	22	3	6	74	2	27	3	**3**	35	3	14	1	3	21	202
08:30 AM	0	31	52	0	83	54	30	**7**	4	95	2	28	2	3	35	2	16	**3**	3	24	237
08:45 AM	1	**51**	**67**	0	**119**	**57**	41	1	**10**	**109**	2	**33**	0	0	35	**4**	15	0	**10**	**29**	**292**
Total Volume	2	144	205	1	352	195	136	13	26	370	11	120	9	7	147	10	62	4	23	99	968
% App. Total	0.6	40.9	58.2	0.3		52.7	36.8	3.5	7		7.5	81.6	6.1	4.8		10.1	62.6	4	23.2		
PHF	.500	.706	.765	.250	.739	.855	.791	.464	.650	.849	.550	.909	.563	.583	.875	.625	.912	.333	.575	.853	.829

Crossroads Engineering

13284 SW 120th Street
Miami, FL 33186
305-233-3997

CLIENT: TRAFTECH
JOB NO.: 2013-042
PROJECT: KEY WEST CITY HALL
COUNTY: MONROE

File Name : FLAGLER AVE @ WHITE ST
Site Code : 00000000
Start Date : 6/18/2013
Page No : 3

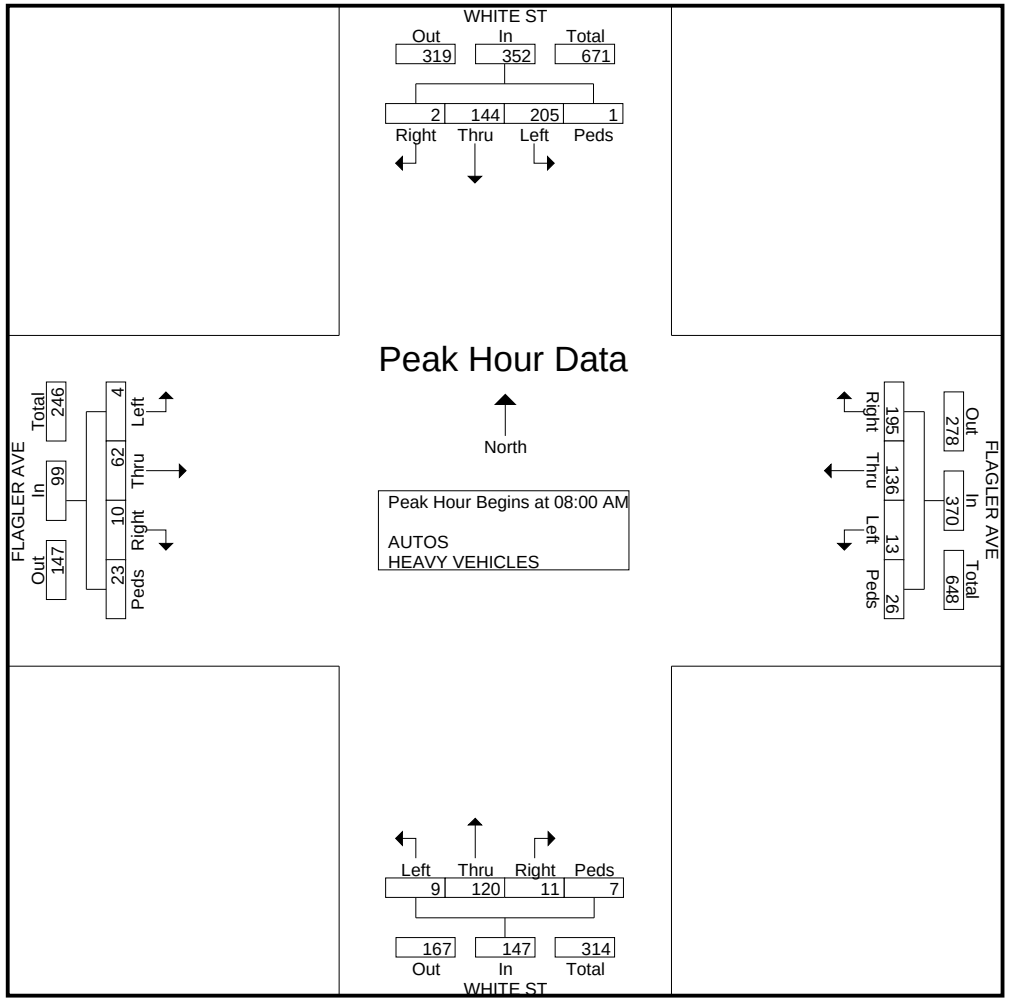

Crossroads Engineering

13284 SW 120th Street
Miami, FL 33186
305-233-3997

CLIENT: TRAFTECH
JOB NO.: 2013-042
PROJECT: KEY WEST CITY HALL
COUNTY: MONROE

File Name : FLAGLER AVE @ WHITE ST
Site Code : 00000000
Start Date : 6/18/2013
Page No : 4

	WHITE ST From North					FLAGLER AVE From East					WHITE ST From South					FLAGLER AVE From West					
Start Time	Right	Thru	Left	Peds	App. Total	Right	Thru	Left	Peds	App. Total	Right	Thru	Left	Peds	App. Total	Right	Thru	Left	Peds	App. Total	Int. Total
Peak Hour Analysis From 04:00 PM to 05:45 PM - Peak 1 of 1																					
Peak Hour for Entire Intersection Begins at 04:30 PM																					
04:30 PM	1	**82**	68	**1**	152	**47**	29	2	2	80	0	24	**2**	**2**	28	11	**53**	2	5	71	331
04:45 PM	3	80	72	0	155	42	36	2	1	81	**3**	18	2	1	24	14	36	3	5	58	318
05:00 PM	**5**	69	**86**	0	160	46	25	**4**	**4**	79	1	**29**	0	2	**32**	**23**	51	**4**	**12**	**90**	**361**
05:15 PM	1	74	85	1	**161**	45	**41**	4	2	**92**	1	26	2	2	31	9	47	1	11	68	352
Total Volume	10	305	311	2	628	180	131	12	9	332	5	97	6	7	115	57	187	10	33	287	1362
% App. Total	1.6	48.6	49.5	0.3		54.2	39.5	3.6	2.7		4.3	84.3	5.2	6.1		19.9	65.2	3.5	11.5		
PHF	.500	.930	.904	.500	.975	.957	.799	.750	.563	.902	.417	.836	.750	.875	.898	.620	.882	.625	.688	.797	.943

Crossroads Engineering

13284 SW 120th Street
Miami, FL 33186
305-233-3997

CLIENT: TRAFTECH
JOB NO.: 2013-042
PROJECT: KEY WEST CITY HALL
COUNTY: MONROE

File Name : FLAGLER AVE @ WHITE ST
Site Code : 00000000
Start Date : 6/18/2013
Page No : 5

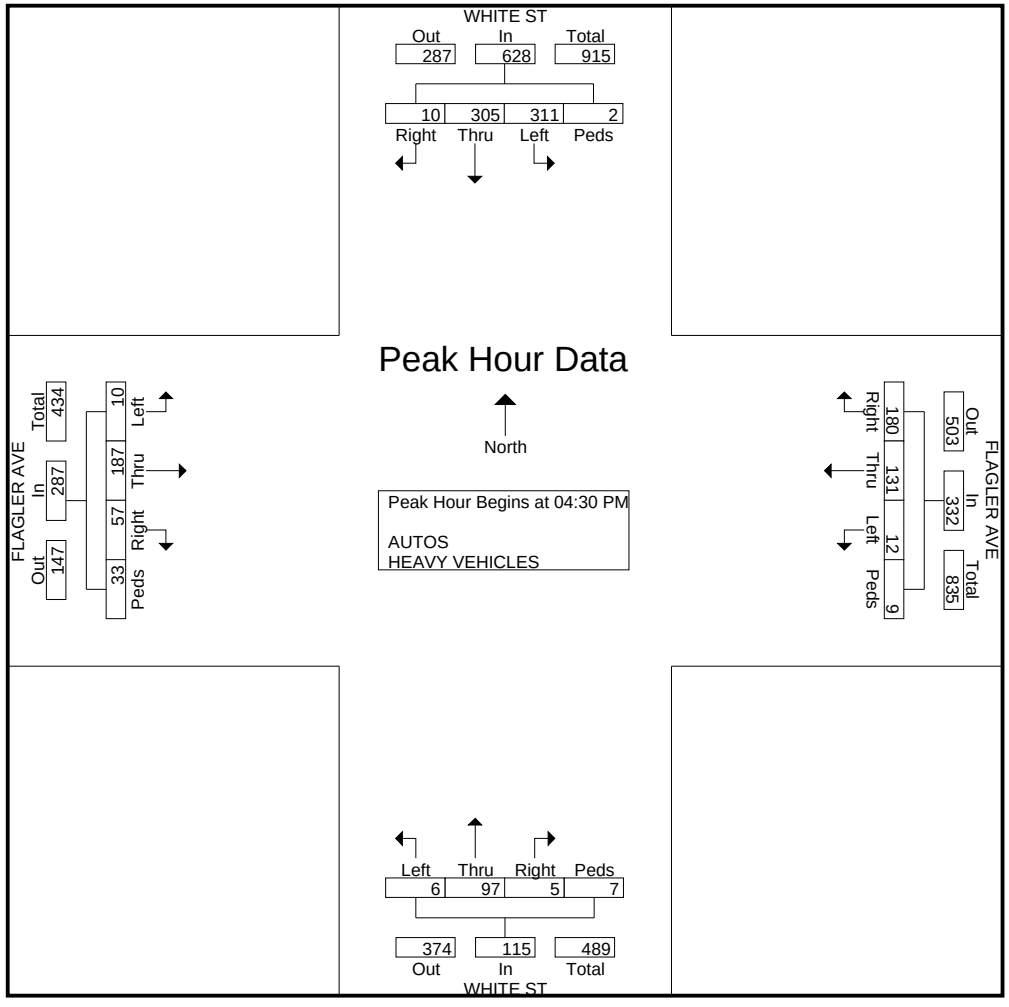

Crossroads Engineering

13284 SW 120th Street
Miami, FL 33186
305-233-3997

CLIENT: TRAFTECH
JOB NO.: 2013-042
PROJECT: KEY WEST CITY HALL
COUNTY: MONROE

File Name : FLAGLER AVE @ WHITE ST
Site Code : 00000000
Start Date : 6/18/2013
Page No : 1

Groups Printed- HEAVY VEHICLES

	WHITE ST From North				FLAGLER AVE From East				WHITE ST From South				FLAGLER AVE From West				
Start Time	Right	Thru	Left	Peds	Right	Thru	Left	Peds	Right	Thru	Left	Peds	Right	Thru	Left	Peds	Int. Total
07:00 AM	0	0	1	0	0	1	0	0	0	1	0	0	0	1	0	0	4
07:15 AM	0	0	2	0	0	1	0	0	0	0	0	0	0	1	0	0	4
07:30 AM	0	0	1	0	1	2	0	0	0	0	0	0	0	3	0	0	7
07:45 AM	0	3	2	0	0	2	0	0	0	2	0	0	0	0	0	0	9
Total	0	3	6	0	1	6	0	0	0	3	0	0	0	5	0	0	24
08:00 AM	0	0	3	0	2	3	0	0	0	1	0	0	0	0	0	0	9
08:15 AM	0	1	6	0	3	2	0	0	0	1	0	0	0	0	0	0	13
08:30 AM	0	2	1	0	4	2	0	0	0	1	0	0	1	1	0	0	12
08:45 AM	0	1	1	0	1	4	0	0	0	0	0	0	1	1	0	0	9
Total	0	4	11	0	10	11	0	0	0	3	0	0	2	2	0	0	43
*** BREAK ***																	
04:00 PM	0	1	1	0	2	0	0	0	0	1	1	0	1	0	0	0	7
04:15 PM	0	3	2	0	1	1	0	0	1	0	0	0	0	0	0	0	8
04:30 PM	0	2	3	0	2	1	0	0	0	1	0	0	1	4	0	0	14
04:45 PM	0	1	1	0	0	1	0	0	0	0	0	0	1	1	1	0	6
Total	0	7	7	0	5	3	0	0	1	2	1	0	3	5	1	0	35
05:00 PM	1	0	4	0	0	0	1	0	0	2	0	0	0	2	0	0	10
05:15 PM	0	1	5	0	0	0	0	0	0	0	0	0	0	0	0	0	6
05:30 PM	0	1	0	0	1	1	0	0	0	1	0	0	0	1	0	0	5
05:45 PM	0	0	3	0	0	1	0	0	0	0	0	0	1	1	0	0	6
Total	1	2	12	0	1	2	1	0	0	3	0	0	1	4	0	0	27
Grand Total	1	16	36	0	17	22	1	0	1	11	1	0	6	16	1	0	129
Apprch %	1.9	30.2	67.9	0	42.5	55	2.5	0	7.7	84.6	7.7	0	26.1	69.6	4.3	0	
Total %	0.8	12.4	27.9	0	13.2	17.1	0.8	0	0.8	8.5	0.8	0	4.7	12.4	0.8	0	

Crossroads Engineering

13284 SW 120th Street
Miami, FL 33186
305-233-3997

CLIENT: TRAFTECH
JOB NO.: 2013-042
PROJECT: KEY WEST CITY HALL
COUNTY: MONROE

File Name : united st @ ginnell st
Site Code : 00000000
Start Date : 6/18/2013
Page No : 1

Groups Printed- AUTOS - HEAVY VEHICLES

	GRINNELL ST From North				UNITED ST From East				GRINNELL ST From South				UNITED ST From West				
Start Time	Right	Thru	Left	Peds	Right	Thru	Left	Peds	Right	Thru	Left	Peds	Right	Thru	Left	Peds	Int. Total
07:00 AM	1	2	0	1	0	23	0	2	0	0	0	3	1	25	2	2	62
07:15 AM	1	1	0	4	0	16	1	5	1	3	1	4	0	24	1	1	63
07:30 AM	0	5	1	2	0	21	0	4	2	4	1	4	2	24	2	1	73
07:45 AM	0	1	1	2	0	40	1	1	3	5	3	7	3	39	3	3	112
Total	2	9	2	9	0	100	2	12	6	12	5	18	6	112	8	7	310
08:00 AM	0	2	1	4	1	37	0	9	0	2	6	4	3	20	2	1	92
08:15 AM	1	0	1	3	0	28	1	4	4	2	2	7	4	35	1	3	96
08:30 AM	1	3	1	4	0	35	5	4	3	3	1	6	2	44	3	3	118
08:45 AM	2	4	1	5	1	36	8	2	0	2	8	3	2	53	3	1	131
Total	4	9	4	16	2	136	14	19	7	9	17	20	11	152	9	8	437
*** BREAK ***																	
04:00 PM	1	1	2	0	0	29	1	0	0	5	2	3	3	80	2	2	131
04:15 PM	1	3	1	3	0	25	1	4	1	2	2	9	4	62	1	5	124
04:30 PM	0	1	1	0	1	27	2	4	1	2	3	1	5	80	4	7	139
04:45 PM	4	2	1	3	0	28	5	1	1	1	3	4	5	74	2	5	139
Total	6	7	5	6	1	109	9	9	3	10	10	17	17	296	9	19	533
05:00 PM	0	5	0	0	0	37	7	2	0	6	1	1	13	80	5	3	160
05:15 PM	0	4	0	2	1	33	5	6	2	8	3	2	3	66	0	3	138
05:30 PM	1	1	1	3	0	29	3	1	2	5	4	2	5	71	1	4	133
05:45 PM	2	4	1	3	0	26	0	8	0	4	0	8	0	51	1	0	108
Total	3	14	2	8	1	125	15	17	4	23	8	13	21	268	7	10	539
Grand Total	15	39	13	39	4	470	40	57	20	54	40	68	55	828	33	44	1819
Apprch %	14.2	36.8	12.3	36.8	0.7	82.3	7	10	11	29.7	22	37.4	5.7	86.2	3.4	4.6	
Total %	0.8	2.1	0.7	2.1	0.2	25.8	2.2	3.1	1.1	3	2.2	3.7	3	45.5	1.8	2.4	
AUTOS	15	39	13	39	4	466	40	57	19	54	40	68	55	801	32	44	1786
% AUTOS	100	100	100	100	100	99.1	100	100	95	100	100	100	100	96.7	97	100	98.2
HEAVY VEHICLES	0	0	0	0	0	4	0	0	1	0	0	0	0	27	1	0	33
% HEAVY VEHICLES	0	0	0	0	0	0.9	0	0	5	0	0	0	0	3.3	3	0	1.8

Crossroads Engineering

13284 SW 120th Street
Miami, FL 33186
305-233-3997

CLIENT: TRAFTECH
JOB NO.: 2013-042
PROJECT: KEY WEST CITY HALL
COUNTY: MONROE

File Name : united st @ ginnell st
Site Code : 00000000
Start Date : 6/18/2013
Page No : 2

	GRINNELL ST From North					UNITED ST From East					GRINNELL ST From South					UNITED ST From West					
Start Time	Right	Thru	Left	Peds	App. Total	Right	Thru	Left	Peds	App. Total	Right	Thru	Left	Peds	App. Total	Right	Thru	Left	Peds	App. Total	Int. Total
Peak Hour Analysis From 07:00 AM to 08:45 AM - Peak 1 of 1																					
Peak Hour for Entire Intersection Begins at 08:00 AM																					
08:00 AM	0	2	**1**	4	7	**1**	**37**	0	**9**	**47**	0	2	6	4	12	3	20	2	1	26	92
08:15 AM	1	0	1	3	5	0	28	1	4	33	**4**	2	2	**7**	**15**	**4**	35	1	**3**	43	96
08:30 AM	1	3	1	4	9	0	35	5	4	44	3	**3**	1	6	13	2	44	**3**	3	52	118
08:45 AM	**2**	**4**	1	**5**	**12**	1	36	**8**	2	47	0	2	**8**	3	13	2	**53**	3	1	**59**	**131**
Total Volume	4	9	4	16	33	2	136	14	19	171	7	9	17	20	53	11	152	9	8	180	437
% App. Total	12.1	27.3	12.1	48.5		1.2	79.5	8.2	11.1		13.2	17	32.1	37.7		6.1	84.4	5	4.4		
PHF	.500	.563	1.00	.800	.688	.500	.919	.438	.528	.910	.438	.750	.531	.714	.883	.688	.717	.750	.667	.763	.834

Crossroads Engineering

13284 SW 120th Street
Miami, FL 33186
305-233-3997

CLIENT: TRAFTECH
JOB NO.: 2013-042
PROJECT: KEY WEST CITY HALL
COUNTY: MONROE

File Name : united st @ ginnell st
Site Code : 00000000
Start Date : 6/18/2013
Page No : 3

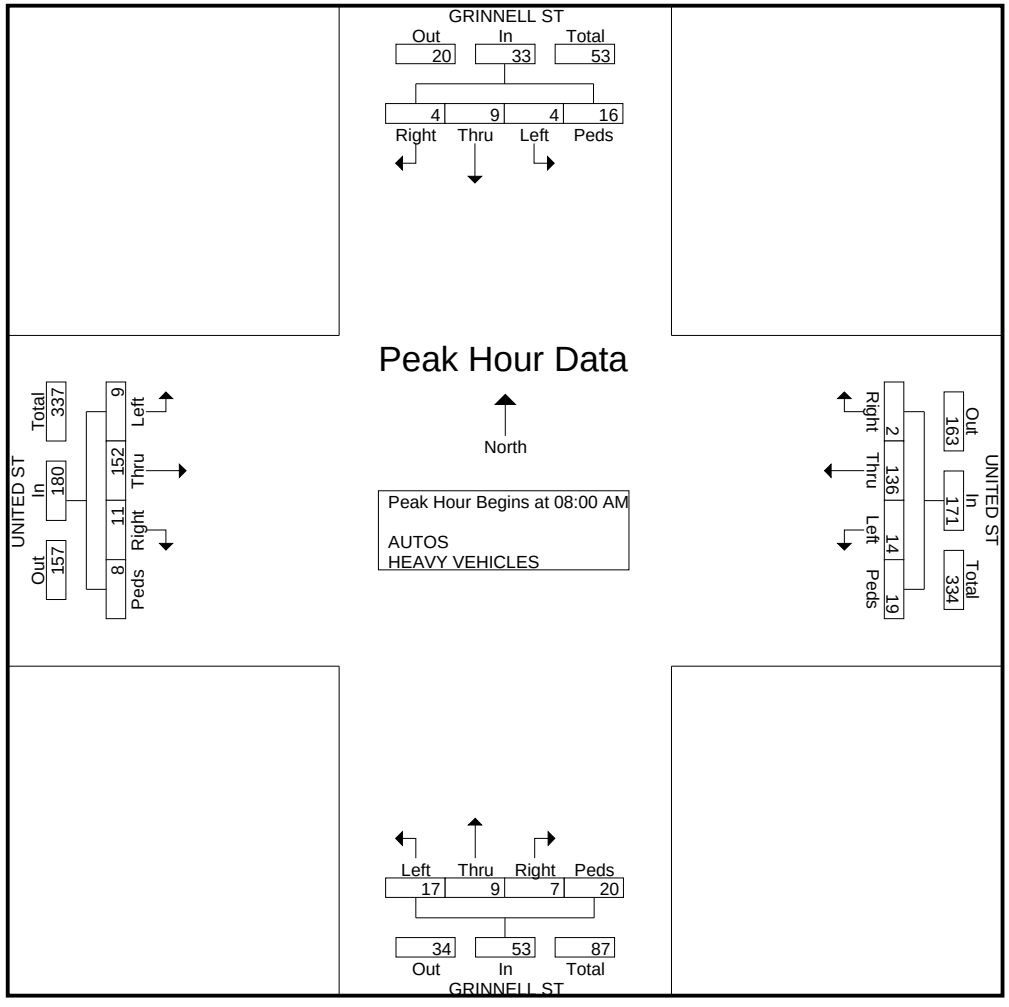

Crossroads Engineering

13284 SW 120th Street
Miami, FL 33186
305-233-3997

CLIENT: TRAFTECH
JOB NO.: 2013-042
PROJECT: KEY WEST CITY HALL
COUNTY: MONROE

File Name : united st @ ginnell st
Site Code : 00000000
Start Date : 6/18/2013
Page No : 4

	GRINNELL ST From North					UNITED ST From East					GRINNELL ST From South					UNITED ST From West					
Start Time	Right	Thru	Left	Peds	App. Total	Right	Thru	Left	Peds	App. Total	Right	Thru	Left	Peds	App. Total	Right	Thru	Left	Peds	App. Total	Int. Total
Peak Hour Analysis From 04:00 PM to 05:45 PM - Peak 1 of 1																					
Peak Hour for Entire Intersection Begins at 04:30 PM																					
04:30 PM	0	1	**1**	0	2	**1**	27	2	4	34	1	2	**3**	1	7	5	**80**	4	**7**	96	139
04:45 PM	**4**	2	1	**3**	**10**	0	28	5	1	34	1	1	3	**4**	9	5	74	2	5	86	139
05:00 PM	0	**5**	0	0	5	0	**37**	**7**	2	**46**	0	6	1	1	8	**13**	80	**5**	3	**101**	**160**
05:15 PM	0	4	0	2	6	1	33	5	**6**	45	**2**	**8**	3	2	**15**	3	66	0	3	72	138
Total Volume	4	12	2	5	23	2	125	19	13	159	4	17	10	8	39	26	300	11	18	355	576
% App. Total	17.4	52.2	8.7	21.7		1.3	78.6	11.9	8.2		10.3	43.6	25.6	20.5		7.3	84.5	3.1	5.1		
PHF	.250	.600	.500	.417	.575	.500	.845	.679	.542	.864	.500	.531	.833	.500	.650	.500	.938	.550	.643	.879	.900

Crossroads Engineering

13284 SW 120th Street
Miami, FL 33186
305-233-3997

CLIENT: TRAFTECH
JOB NO.: 2013-042
PROJECT: KEY WEST CITY HALL
COUNTY: MONROE

File Name : united st @ ginnell st
Site Code : 00000000
Start Date : 6/18/2013
Page No : 5

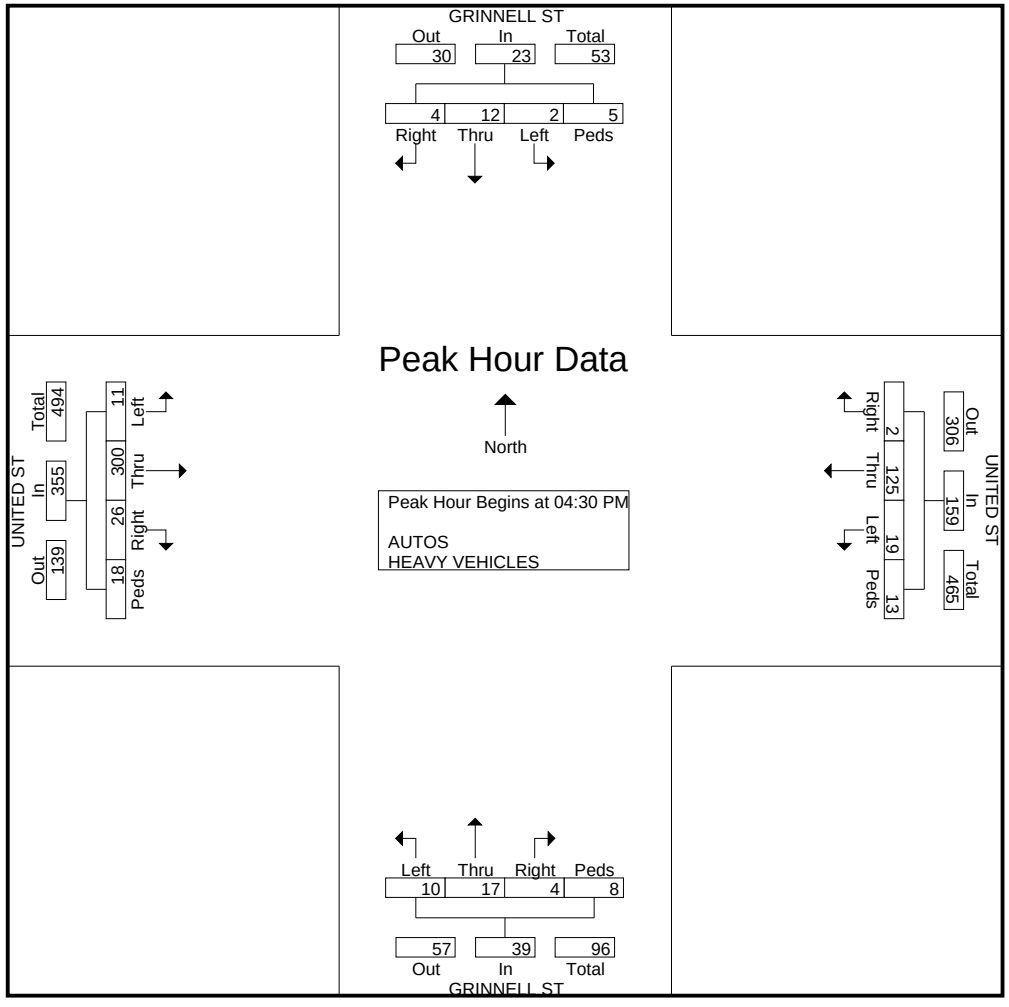

Crossroads Engineering

13284 SW 120th Street
Miami, FL 33186
305-233-3997

CLIENT: TRAFTECH
JOB NO.: 2013-042
PROJECT: KEY WEST CITY HALL
COUNTY: MONROE

File Name : seminary st @ ginnell st
Site Code : 00000000
Start Date : 6/18/2013
Page No : 1

Groups Printed- AUTOS - HEAVY VEHICLES

	GRINNELL ST From North				SEMINARY ST From East				GRINNELL ST From South				SEMINARY ST From West				
Start Time	Right	Thru	Left	Peds	Right	Thru	Left	Peds	Right	Thru	Left	Peds	Right	Thru	Left	Peds	Int. Total
07:00 AM	0	2	0	0	0	2	0	2	0	0	1	0	0	0	0	3	10
07:15 AM	1	4	0	0	2	0	0	3	0	3	0	0	0	0	1	1	15
07:30 AM	0	3	0	0	0	1	0	0	0	3	0	0	0	1	1	1	10
07:45 AM	0	5	2	0	1	0	0	4	0	10	1	0	0	3	0	1	27
Total	1	14	2	0	3	3	0	9	0	16	2	0	0	4	2	6	62
08:00 AM	0	2	2	0	5	1	0	5	0	6	0	1	0	0	0	2	24
08:15 AM	0	5	0	0	5	1	1	0	0	3	0	0	0	0	0	0	15
08:30 AM	1	6	3	0	2	1	0	1	1	5	0	0	0	4	0	2	26
08:45 AM	0	8	5	0	7	3	0	3	0	4	0	0	0	6	0	0	36
Total	1	21	10	0	19	6	1	9	1	18	0	1	0	10	0	4	101

*** BREAK ***

04:00 PM	0	5	1	0	6	0	1	0	0	1	0	0	0	1	0	0	15
04:15 PM	0	5	1	0	3	1	0	1	2	2	0	0	0	0	0	0	15
04:30 PM	0	3	3	0	3	0	0	0	1	5	0	0	0	1	0	0	16
04:45 PM	0	7	3	0	2	2	0	2	1	4	0	1	0	1	1	2	26
Total	0	20	8	0	14	3	1	3	4	12	0	1	0	3	1	2	72
05:00 PM	0	11	9	0	3	2	0	0	0	4	0	0	0	0	1	0	30
05:15 PM	0	7	4	0	6	2	1	0	0	5	0	2	0	2	2	0	31
05:30 PM	0	6	5	0	6	2	0	0	1	5	0	0	0	1	1	0	27
05:45 PM	0	4	0	0	1	2	0	2	0	1	0	0	1	1	0	3	15
Total	0	28	18	0	16	8	1	2	1	15	0	2	1	4	4	3	103
Grand Total	2	83	38	0	52	20	3	23	6	61	2	4	1	21	7	15	338
Apprch %	1.6	67.5	30.9	0	53.1	20.4	3.1	23.5	8.2	83.6	2.7	5.5	2.3	47.7	15.9	34.1	
Total %	0.6	24.6	11.2	0	15.4	5.9	0.9	6.8	1.8	18	0.6	1.2	0.3	6.2	2.1	4.4	
AUTOS	2	81	38	0	52	16	3	23	5	59	2	4	1	10	6	15	317
% AUTOS	100	97.6	100	0	100	80	100	100	83.3	96.7	100	100	100	47.6	85.7	100	93.8
HEAVY VEHICLES	0	2	0	0	0	4	0	0	1	2	0	0	0	11	1	0	21
% HEAVY VEHICLES	0	2.4	0	0	0	20	0	0	16.7	3.3	0	0	0	52.4	14.3	0	6.2

Crossroads Engineering

13284 SW 120th Street
Miami, FL 33186
305-233-3997

CLIENT: TRAFTECH
JOB NO.: 2013-042
PROJECT: KEY WEST CITY HALL
COUNTY: MONROE

File Name : seminary st @ ginnell st
Site Code : 00000000
Start Date : 6/18/2013
Page No : 2

	GRINNELL ST From North					SEMINARY ST From East					GRINNELL ST From South					SEMINARY ST From West					
Start Time	Right	Thru	Left	Peds	App. Total	Right	Thru	Left	Peds	App. Total	Right	Thru	Left	Peds	App. Total	Right	Thru	Left	Peds	App. Total	Int. Total
Peak Hour Analysis From 07:00 AM to 08:45 AM - Peak 1 of 1																					
Peak Hour for Entire Intersection Begins at 08:00 AM																					
08:00 AM	0	2	2	0	4	5	1	0	**5**	11	0	**6**	0	**1**	**7**	0	0	0	**2**	2	24
08:15 AM	0	5	0	0	5	5	1	**1**	0	7	0	3	0	0	3	0	0	0	0	0	15
08:30 AM	**1**	6	3	0	10	2	1	0	1	4	**1**	5	0	0	6	0	4	0	2	**6**	26
08:45 AM	0	**8**	**5**	0	**13**	**7**	**3**	0	3	**13**	0	4	0	0	4	0	**6**	0	0	6	**36**
Total Volume	1	21	10	0	32	19	6	1	9	35	1	18	0	1	20	0	10	0	4	14	101
% App. Total	3.1	65.6	31.2	0		54.3	17.1	2.9	25.7		5	90	0	5		0	71.4	0	28.6		
PHF	.250	.656	.500	.000	.615	.679	.500	.250	.450	.673	.250	.750	.000	.250	.714	.000	.417	.000	.500	.583	.701

Crossroads Engineering

13284 SW 120th Street
Miami, FL 33186
305-233-3997

CLIENT: TRAFTECH
JOB NO.: 2013-042
PROJECT: KEY WEST CITY HALL
COUNTY: MONROE

File Name : seminary st @ ginnell st
Site Code : 00000000
Start Date : 6/18/2013
Page No : 3

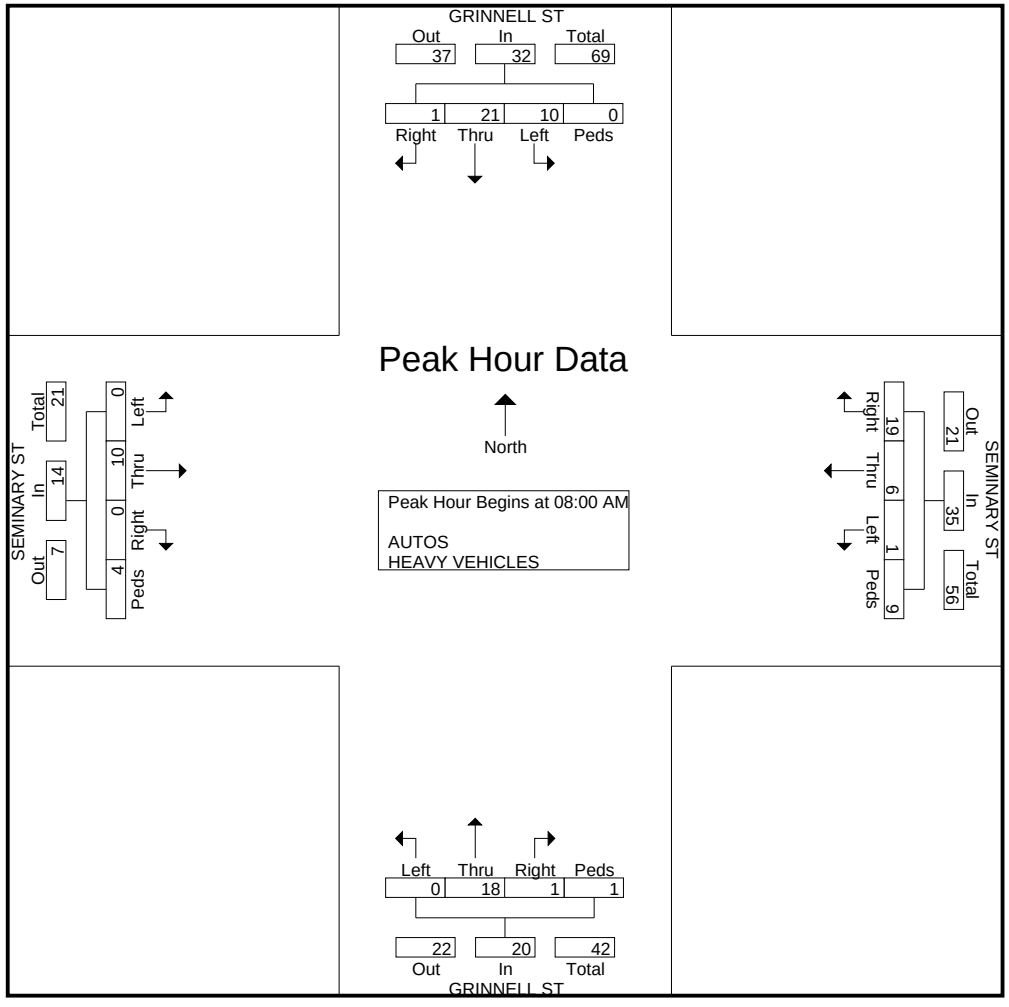

Crossroads Engineering

13284 SW 120th Street
Miami, FL 33186
305-233-3997

CLIENT: TRAFTECH
JOB NO.: 2013-042
PROJECT: KEY WEST CITY HALL
COUNTY: MONROE

File Name : seminary st @ ginnell st
Site Code : 00000000
Start Date : 6/18/2013
Page No : 4

	GRINNELL ST From North					SEMINARY ST From East					GRINNELL ST From South					SEMINARY ST From West					
Start Time	Right	Thru	Left	Peds	App. Total	Right	Thru	Left	Peds	App. Total	Right	Thru	Left	Peds	App. Total	Right	Thru	Left	Peds	App. Total	Int. Total
Peak Hour Analysis From 04:00 PM to 05:45 PM - Peak 1 of 1																					
Peak Hour for Entire Intersection Begins at 04:45 PM																					
04:45 PM	0	7	3	0	10	2	**2**	0	**2**	6	**1**	4	0	1	6	0	1	1	**2**	**4**	26
05:00 PM	0	**11**	**9**	0	**20**	3	2	0	0	5	0	4	0	0	4	0	0	1	0	1	30
05:15 PM	0	7	4	0	11	**6**	2	**1**	0	**9**	0	**5**	0	**2**	**7**	0	**2**	**2**	0	4	**31**
05:30 PM	0	6	5	0	11	6	2	0	0	8	1	5	0	0	6	0	1	1	0	2	27
Total Volume	0	31	21	0	52	17	8	1	2	28	2	18	0	3	23	0	4	5	2	11	114
% App. Total	0	59.6	40.4	0		60.7	28.6	3.6	7.1		8.7	78.3	0	13		0	36.4	45.5	18.2		
PHF	.000	.705	.583	.000	.650	.708	1.00	.250	.250	.778	.500	.900	.000	.375	.821	.000	.500	.625	.250	.688	.919

Crossroads Engineering

13284 SW 120th Street
Miami, FL 33186
305-233-3997

CLIENT: TRAFTECH
JOB NO.: 2013-042
PROJECT: KEY WEST CITY HALL
COUNTY: MONROE

File Name : seminary st @ ginnell st
Site Code : 00000000
Start Date : 6/18/2013
Page No : 5

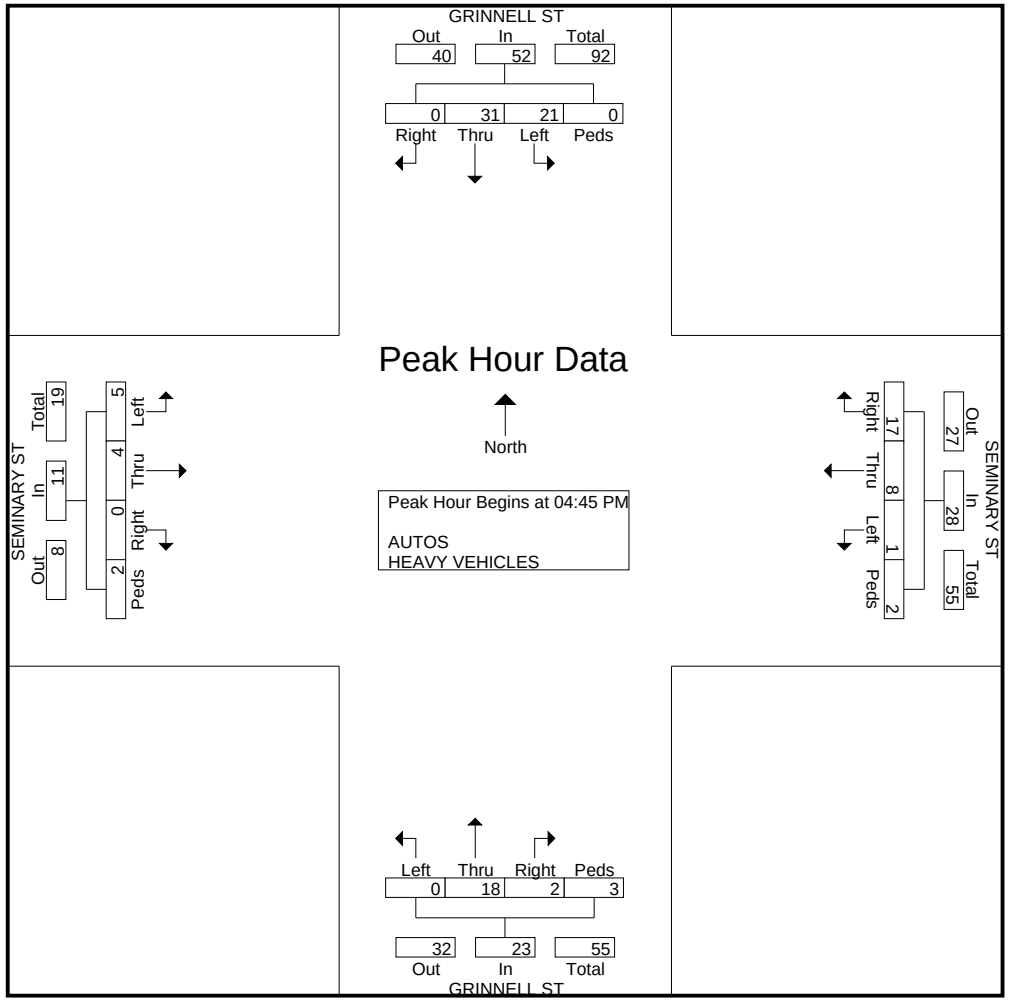

APPENDIX C

Traffic Counts

Roadway Link Counts

Crossroads Engineering

13284 Sw 120th St.
Miami, FL 33186
305-233-3997

CLIENT:TRAFTECH
JOB NO:2013-042
PROJECT:KEY WEST CITY HALL
COUNTY:MONROE

TRUMAN AVE EAST OF WHITE ST

TRUMAN AVE EAST OF WHITE ST

Date Start: 18-Jun-13
Date End: 19-Jun-13

Start	18-Jun-13	EB		Hour Totals		WB		Hour Totals		Combined Totals	
Time	Tue	Morning	Afternoon	Morning	Afternoon	Morning	Afternoon	Morning	Afternoon	Morning	Afternoon
12:00		26	90			1	4				
12:15		14	59			4	10				
12:30		7	63			1	3				
12:45		10	57	57	269	1	5	7	22	64	291
01:00		7	54			1	3				
01:15		8	52			1	7				
01:30		10	49			0	14				
01:45		6	74	31	229	2	4	4	28	35	257
02:00		5	63			2	7				
02:15		14	72			3	8				
02:30		4	67			3	4				
02:45		4	58	27	260	1	10	9	29	36	289
03:00		5	68			0	3				
03:15		4	69			2	***6***				
03:30		8	88			1	***7***				
03:45		2	93	19	318	1	***11***	4	27	23	345
04:00		5	77			2	***12***				
04:15		7	73			0	3				
04:30		4	***77***			0	4				
04:45		1	***79***	17	306	1	7	3	26	20	332
05:00		5	***96***			1	3				
05:15		2	***92***			1	2				
05:30		6	70			2	8				
05:45		6	72	19	330	0	8	4	21	23	351
06:00		7	32			2	2				
06:15		8	49			6	7				
06:30		19	77			1	6				
06:45		34	38	68	196	5	3	14	18	82	214
07:00		22	36			6	3				
07:15		22	52			***5***	12				
07:30		22	43			***5***	4				
07:45		31	37	97	168	***11***	1	27	20	124	188
08:00		39	40			***10***	4				
08:15		33	45			5	8				
08:30		40	44			2	3				
08:45		53	35	165	164	5	3	22	18	187	182
09:00		51	55			3	5				
09:15		51	42			3	3				
09:30		43	35			9	5				
09:45		54	39	199	171	4	2	19	15	218	186
10:00		60	50			4	6				
10:15		52	42			2	4				
10:30		49	35			5	6				
10:45		44	38	205	165	6	2	17	18	222	183
11:00		***59***	21			4	1				
11:15		***62***	31			6	3				
11:30		***63***	16			10	2				
11:45		***58***	17	242	85	7	3	27	9	269	94
Total		1146	2661			157	251			1303	2912
Percent		30.1%	69.9%			38.5%	61.5%			30.9%	69.1%
AM Peak		11:00				07:15					
Vol.		242				31					
P.H.F.		0.960				0.705					
PM Peak			04:30				03:15				
Vol.			344				36				
P.H.F.			0.896				0.750				

Crossroads Engineering

13284 Sw 120th St.
Miami, FL 33186
305-233-3997

CLIENT:TRAFTECH
JOB NO:2013-042
PROJECT:KEY WEST CITY HALL
COUNTY:MONROE

TRUMAN AVE EAST OF WHITE ST

TRUMAN AVE EAST OF WHITE ST

Date Start: 18-Jun-13
Date End: 19-Jun-13

Start Time	19-Jun-13 Wed	EB Morning	EB Afternoon	Hour Totals Morning	Hour Totals Afternoon	WB Morning	WB Afternoon	Hour Totals Morning	Hour Totals Afternoon	Combined Totals Morning	Combined Totals Afternoon
12:00		13	85			5	5				
12:15		25	63			1	***13***				
12:30		21	55			0	***8***				
12:45		15	80	74	283	3	***13***	9	39	83	322
01:00		11	64			3	***9***				
01:15		10	62			0	9				
01:30		7	53			0	5				
01:45		9	70	37	249	3	9	6	32	43	281
02:00		3	63			0	5				
02:15		9	59			1	3				
02:30		8	70			0	10				
02:45		4	70	24	262	1	3	2	21	26	283
03:00		4	74			0	7				
03:15		7	72			0	4				
03:30		4	72			1	7				
03:45		4	84	19	302	0	8	1	26	20	328
04:00		8	106			1	10				
04:15		5	***109***			1	4				
04:30		5	***105***			1	13				
04:45		5	***85***	23	405	2	13	5	40	28	445
05:00		2	***108***			3	5				
05:15		5	89			1	7				
05:30		11	64			0	3				
05:45		10	73	28	334	1	10	5	25	33	359
06:00		14	50			2	3				
06:15		16	54			3	4				
06:30		12	48			5	6				
06:45		27	45	69	197	4	7	14	20	83	217
07:00		20	48			4	7				
07:15		24	38			6	5				
07:30		29	41			7	2				
07:45		36	46	109	173	8	5	25	19	134	192
08:00		41	36			4	6				
08:15		40	48			6	5				
08:30		43	51			7	6				
08:45		50	49	174	184	8	10	25	27	199	211
09:00		44	54			3	11				
09:15		51	53			7	5				
09:30		42	48			5	3				
09:45		45	46	182	201	5	4	20	23	202	224
10:00		49	43			5	4				
10:15		52	35			6	2				
10:30		64	30			6	2				
10:45		61	43	226	151	***10***	1	27	9	253	160
11:00		***60***	40			***10***	0				
11:15		***58***	26			***8***	3				
11:30		***54***	18			***11***	1				
11:45		***74***	18	246	102	2	2	31	6	277	108
Total		1211	2843			170	287			1381	3130
Percent		29.9%	70.1%			37.2%	62.8%			30.6%	69.4%
AM Peak		11:00				10:45					
Vol.		246				39					
P.H.F.		0.831				0.886					
PM Peak			04:15				00:15				
Vol.			407				43				
P.H.F.			0.933				0.827				
Total		2357	5504			327	538			2684	6042
Percent		30.0%	70.0%			37.8%	62.2%			30.8%	69.2%

ADT ADT 4,363 AADT 4,363

Crossroads Engineering

13284 Sw 120th St.
Miami, FL 33186
305-233-3997

CLIENT:TRAFTECH
JOB NO:2013-042
PROJECT:KEY WEST CITY HALL
COUNTY:MONROE

TRUMAN AVE WEST OF WHITE ST

TRUMAN AVE WEST OF WHITE ST

Date Start: 18-Jun-13
Date End: 19-Jun-13

Start	18-Jun-13	EB		Hour Totals		WB		Hour Totals		Combined Totals	
Time	Tue	Morning	Afternoon	Morning	Afternoon	Morning	Afternoon	Morning	Afternoon	Morning	Afternoon
12:00		33	129			19	77				
12:15		27	93			18	98				
12:30		20	84			15	77				
12:45		15	101	95	407	9	55	61	307	156	714
01:00		9	104			14	72				
01:15		14	83			16	90				
01:30		15	107			10	77				
01:45		22	79	60	373	7	69	47	308	107	681
02:00		20	88			8	93				
02:15		21	114			6	91				
02:30		9	108			14	67				
02:45		2	66	52	376	8	81	36	332	88	708
03:00		13	93			7	***108***				
03:15		11	***129***			5	***84***				
03:30		11	***111***			8	***79***				
03:45		11	***125***	46	458	11	***100***	31	371	77	829
04:00		23	***120***			22	74				
04:15		7	105			6	83				
04:30		6	98			8	63				
04:45		8	97	44	420	8	67	44	287	88	707
05:00		6	134			7	39				
05:15		12	123			4	74				
05:30		11	82			11	54				
05:45		13	87	42	426	12	81	34	248	76	674
06:00		10	77			19	63				
06:15		21	91			21	57				
06:30		22	87			21	60				
06:45		24	79	77	334	33	42	94	222	171	556
07:00		34	68			44	60				
07:15		29	67			36	64				
07:30		39	58			47	63				
07:45		52	57	154	250	54	53	181	240	335	490
08:00		61	53			54	51				
08:15		51	72			54	58				
08:30		61	70			63	44				
08:45		68	64	241	259	72	57	243	210	484	469
09:00		81	85			45	51				
09:15		78	74			57	28				
09:30		85	61			64	35				
09:45		100	50	344	270	74	28	240	142	584	412
10:00		94	77			61	26				
10:15		87	76			77	44				
10:30		84	50			69	20				
10:45		87	38	352	241	73	29	280	119	632	360
11:00		***99***	54			***66***	27				
11:15		***84***	34			***90***	17				
11:30		***118***	36			***84***	20				
11:45		***96***	28	397	152	***111***	15	351	79	748	231
Total		1904	3966			1642	2865			3546	6831
Percent		32.4%	67.6%			36.4%	63.6%			34.2%	65.8%
AM Peak		11:00				11:00					
Vol.		397				351					
P.H.F.		0.841				0.791					
PM Peak			03:15				03:00				
Vol.			485				371				
P.H.F.			0.940				0.859				

Crossroads Engineering

13284 Sw 120th St.
Miami, FL 33186
305-233-3997

CLIENT:TRAFTECH
JOB NO:2013-042
PROJECT:KEY WEST CITY HALL
COUNTY:MONROE

TRUMAN AVE WEST OF WHITE ST

TRUMAN AVE WEST OF WHITE ST

Date Start: 18-Jun-13
Date End: 19-Jun-13

Start Time	19-Jun-13 Wed	EB Morning	EB Afternoon	Hour Totals Morning	Hour Totals Afternoon	WB Morning	WB Afternoon	Hour Totals Morning	Hour Totals Afternoon	Combined Totals Morning	Combined Totals Afternoon
12:00		22	110			17	71				
12:15		57	80			17	***89***				
12:30		36	98			14	***70***				
12:45		17	103	132	391	27	***99***	75	329	207	720
01:00		20	102			14	***80***				
01:15		22	99			15	74				
01:30		21	95			7	77				
01:45		23	85	86	381	13	59	49	290	135	671
02:00		14	99			15	78				
02:15		16	96			14	84				
02:30		14	101			4	79				
02:45		16	94	60	390	14	70	47	311	107	701
03:00		15	118			3	79				
03:15		11	93			12	72				
03:30		15	93			9	75				
03:45		6	116	47	420	8	80	32	306	79	726
04:00		14	122			12	78				
04:15		15	***138***			6	55				
04:30		9	***123***			4	67				
04:45		6	***122***	44	505	4	80	26	280	70	785
05:00		3	***129***			2	64				
05:15		9	99			13	59				
05:30		15	95			6	68				
05:45		10	83	37	406	14	70	35	261	72	667
06:00		14	84			8	77				
06:15		21	84			22	75				
06:30		23	80			16	73				
06:45		28	67	86	315	29	64	75	289	161	604
07:00		32	69			33	73				
07:15		29	66			29	51				
07:30		39	61			34	43				
07:45		53	57	153	253	56	64	152	231	305	484
08:00		50	57			53	45				
08:15		57	64			47	55				
08:30		52	82			56	42				
08:45		61	83	220	286	62	54	218	196	438	482
09:00		71	91			67	44				
09:15		70	63			37	37				
09:30		98	75			50	47				
09:45		61	73	300	302	77	38	231	166	531	468
10:00		69	59			63	30				
10:15		69	53			64	39				
10:30		***100***	56			85	31				
10:45		***88***	49	326	217	59	24	271	124	597	341
11:00		***93***	51			***64***	26				
11:15		***99***	43			***68***	21				
11:30		92	31			***95***	17				
11:45		95	30	379	155	***81***	23	308	87	687	242
Total		1870	4021			1519	2870			3389	6891
Percent		31.7%	68.3%			34.6%	65.4%			33.0%	67.0%
AM Peak		10:30				11:00					
Vol.		380				308					
P.H.F.		0.950				0.811					
PM Peak			04:15				00:15				
Vol.			512				338				
P.H.F.			0.928				0.854				
Total		3774	7987			3161	5735			6935	13722
Percent		32.1%	67.9%			35.5%	64.5%			33.6%	66.4%

ADT ADT 10,328 AADT 10,328

Crossroads Engineering

13284 Sw 120th St.
Miami, FL 33186
305-233-3997

CLIENT: TRAFTECH
JOB NO:2013-042
PROJECT: KEY WEST CITY HALL
COUNTY: MONROE

WHITE STREET SOUTH OF CATHERINE ST

WHITE ST SOUTH OF CATHERINE ST

Date Start: 18-Jun-13
Date End: 19-Jun-13

Start	18-Jun-13	NB		Hour Totals		SB		Hour Totals		Combined Totals	
Time	Tue	Morning	Afternoon	Morning	Afternoon	Morning	Afternoon	Morning	Afternoon	Morning	Afternoon
12:00		8	47			26	162				
12:15		8	78			21	128				
12:30		9	81			22	106				
12:45		9	89	34	295	11	136	80	532	114	827
01:00		0	98			16	116				
01:15		5	81			11	123				
01:30		7	81			14	115				
01:45		5	65	17	325	12	104	53	458	70	783
02:00		3	92			9	97				
02:15		3	67			10	99				
02:30		3	72			12	136				
02:45		3	89	12	320	2	102	33	434	45	754
03:00		2	88			10	112				
03:15		3	76			5	115				
03:30		7	85			9	114				
03:45		3	***96***	15	345	12	122	36	463	51	808
04:00		13	***103***			6	145				
04:15		2	***92***			9	***156***				
04:30		1	***92***			8	***129***				
04:45		7	92	23	379	11	***154***	34	584	57	963
05:00		5	66			7	***153***				
05:15		7	89			13	151				
05:30		7	75			14	119				
05:45		19	70	38	300	14	96	48	519	86	819
06:00		13	53			19	104				
06:15		18	59			13	110				
06:30		25	71			26	97				
06:45		34	54	90	237	31	100	89	411	179	648
07:00		25	64			42	73				
07:15		33	63			41	54				
07:30		58	61			60	82				
07:45		79	48	195	236	60	62	203	271	398	507
08:00		68	33			72	66				
08:15		***95***	59			64	83				
08:30		***87***	37			85	74				
08:45		***99***	29	349	158	102	58	323	281	672	439
09:00		***89***	38			75	90				
09:15		79	33			81	79				
09:30		63	23			97	75				
09:45		82	28	313	122	105	47	358	291	671	413
10:00		74	28			98	68				
10:15		73	26			91	58				
10:30		81	14			***100***	42				
10:45		82	20	310	88	***116***	33	405	201	715	289
11:00		77	14			***113***	36				
11:15		110	11			***117***	42				
11:30		88	5			98	25				
11:45		79	8	354	38	101	23	429	126	783	164
Total		1750	2843			2091	4571			3841	7414
Percent		38.1%	61.9%			31.4%	68.6%			34.1%	65.9%
AM Peak		08:15				10:30					
Vol.		370				446					
P.H.F.		0.934				0.953					
PM Peak			03:45				04:15				
Vol.			383				592				
P.H.F.			0.930				0.949				

Crossroads Engineering

13284 Sw 120th St.
Miami, FL 33186
305-233-3997

CLIENT: TRAFTECH
JOB NO:2013-042
PROJECT: KEY WEST CITY HALL
COUNTY: MONROE

WHITE STREET SOUTH OF CATHERINE ST

WHITE ST SOUTH OF CATHERINE ST

Date Start: 18-Jun-13
Date End: 19-Jun-13

Start Time	19-Jun-13 Wed	NB Morning	NB Afternoon	Hour Totals Morning	Hour Totals Afternoon	SB Morning	SB Afternoon	Hour Totals Morning	Hour Totals Afternoon	Combined Totals Morning	Combined Totals Afternoon
12:00		12	***93***			13	127				
12:15		7	***94***			28	120				
12:30		7	***86***			23	118				
12:45		7	***102***	33	375	20	117	84	482	117	857
01:00		7	86			13	123				
01:15		1	92			16	97				
01:30		5	84			20	134				
01:45		8	87	21	349	19	121	68	475	89	824
02:00		6	77			10	109				
02:15		4	76			17	111				
02:30		0	66			8	102				
02:45		3	79	13	298	7	142	42	464	55	762
03:00		1	74			15	130				
03:15		4	84			5	136				
03:30		1	77			9	121				
03:45		4	92	10	327	10	123	39	510	49	837
04:00		1	93			6	142				
04:15		2	74			6	157				
04:30		2	77			7	***170***				
04:45		8	77	13	321	9	***171***	28	640	41	961
05:00		8	77			10	***185***				
05:15		8	87			8	***167***				
05:30		5	68			12	125				
05:45		8	87	29	319	9	97	39	574	68	893
06:00		11	64			10	117				
06:15		17	54			24	92				
06:30		20	59			24	89				
06:45		23	66	71	243	23	91	81	389	152	632
07:00		30	66			51	89				
07:15		36	54			37	93				
07:30		54	59			55	80				
07:45		90	53	210	232	62	84	205	346	415	578
08:00		84	39			76	65				
08:15		72	45			82	76				
08:30		77	48			78	70				
08:45		89	38	322	170	102	67	338	278	660	448
09:00		69	43			75	63				
09:15		85	18			67	60				
09:30		83	35			90	68				
09:45		88	35	325	131	87	68	319	259	644	390
10:00		67	34			100	57				
10:15		91	28			93	48				
10:30		75	33			89	56				
10:45		71	22	304	117	102	28	384	189	688	306
11:00		***77***	15			***101***	31				
11:15		***78***	17			***107***	31				
11:30		***97***	10			***111***	30				
11:45		***88***	16	340	58	***105***	21	424	113	764	171
Total		1691	2940			2051	4719			3742	7659
Percent		36.5%	63.5%			30.3%	69.7%			32.8%	67.2%
AM Peak		11:00				11:00					
Vol.		340				424					
P.H.F.		0.876				0.955					
PM Peak			12:00				04:30				
Vol.			375				693				
P.H.F.			0.919				0.936				
Total		3441	5783			4142	9290			7583	15073
Percent		37.3%	62.7%			30.8%	69.2%			33.5%	66.5%

ADT ADT 11,328 AADT 11,328

Crossroads Engineering

13284 Sw 120th St.
Miami, FL 33186
305-233-3997

CLIENT:TRAFTECH
JOB NO:2013-042
PROJECT:CITY OF KEY WEST
COUNTY:MONROE

WHITE STREET NORTH OF WASHINGTON ST

WHITE ST NORTH OF WASHINGTON ST

Date Start: 18-Jun-13
Date End: 19-Jun-13

Start Time	18-Jun-13 Tue	NB Morning	NB Afternoon	Hour Totals Morning	Hour Totals Afternoon	SB Morning	SB Afternoon	Hour Totals Morning	Hour Totals Afternoon	Combined Totals Morning	Combined Totals Afternoon
12:00		8	62			21	133				
12:15		7	***72***			19	103				
12:30		3	***63***			18	111				
12:45		4	***80***	22	277	12	130	70	477	92	754
01:00		5	***65***			10	103				
01:15		5	69			12	128				
01:30		5	64			8	96				
01:45		6	55	21	253	12	98	42	425	63	678
02:00		3	62			3	100				
02:15		2	61			7	93				
02:30		3	53			9	140				
02:45		2	80	10	256	5	123	24	456	34	712
03:00		1	78			7	122				
03:15		5	50			8	108				
03:30		4	55			7	134				
03:45		7	89	17	272	7	136	29	500	46	772
04:00		7	54			6	139				
04:15		4	70			7	***175***				
04:30		2	63			9	***129***				
04:45		5	58	18	245	13	***149***	35	592	53	837
05:00		3	75			5	***152***				
05:15		9	70			12	156				
05:30		7	62			13	125				
05:45		12	41	31	248	19	106	49	539	80	787
06:00		13	38			22	109				
06:15		12	45			22	92				
06:30		26	64			30	104				
06:45		46	50	97	197	31	87	105	392	202	589
07:00		29	55			47	69				
07:15		41	47			65	67				
07:30		63	59			55	73				
07:45		96	31	229	192	80	67	247	276	476	468
08:00		72	47			68	68				
08:15		***88***	46			73	84				
08:30		***96***	27			91	72				
08:45		***107***	30	363	150	110	89	342	313	705	463
09:00		***83***	27			84	87				
09:15		64	26			88	99				
09:30		63	21			97	82				
09:45		89	22	299	96	98	55	367	323	666	419
10:00		62	22			99	67				
10:15		70	19			85	70				
10:30		75	14			***108***	45				
10:45		69	17	276	72	***118***	34	410	216	686	288
11:00		58	8			***107***	41				
11:15		91	10			***113***	41				
11:30		57	5			105	24				
11:45		81	13	287	36	119	25	444	131	731	167
Total		1670	2294			2164	4640			3834	6934
Percent		42.1%	57.9%			31.8%	68.2%			35.6%	64.4%
AM Peak		08:15				10:30					
Vol.		374				446					
P.H.F.		0.874				0.945					
PM Peak			00:15				04:15				
Vol.			280				605				
P.H.F.			0.875				0.864				

Crossroads Engineering

13284 Sw 120th St.
Miami, FL 33186
305-233-3997

CLIENT:TRAFTECH
JOB NO:2013-042
PROJECT:CITY OF KEY WEST
COUNTY:MONROE

WHITE STREET NORTH OF WASHINGTON ST

WHITE ST NORTH OF WASHINGTON ST

Date Start: 18-Jun-13
Date End: 19-Jun-13

Start Time	19-Jun-13 Wed	NB Morning	NB Afternoon	Hour Totals Morning	Hour Totals Afternoon	SB Morning	SB Afternoon	Hour Totals Morning	Hour Totals Afternoon	Combined Totals Morning	Combined Totals Afternoon
12:00		6	***73***			14	152				
12:15		6	***69***			36	110				
12:30		8	***78***			23	137				
12:45		3	***67***	23	287	15	128	88	527	111	814
01:00		4	67			15	122				
01:15		4	59			10	95				
01:30		6	64			19	143				
01:45		4	65	18	255	18	113	62	473	80	728
02:00		3	53			10	114				
02:15		3	65			14	113				
02:30		2	51			7	96				
02:45		3	60	11	229	8	157	39	480	50	709
03:00		0	55			13	119				
03:15		4	51			5	139				
03:30		1	60			8	117				
03:45		2	81	7	247	7	118	33	493	40	740
04:00		1	44			4	142				
04:15		4	52			7	***158***				
04:30		5	49			8	***176***				
04:45		5	47	15	192	9	***156***	28	632	43	824
05:00		10	76			10	***167***				
05:15		8	56			14	131				
05:30		3	51			10	105				
05:45		8	61	29	244	13	94	47	497	76	741
06:00		10	50			17	99				
06:15		11	42			32	93				
06:30		16	56			29	94				
06:45		40	49	77	197	33	92	111	378	188	575
07:00		30	54			41	98				
07:15		45	48			42	86				
07:30		68	50			55	90				
07:45		***104***	43	247	195	72	78	210	352	457	547
08:00		***72***	40			70	77				
08:15		***80***	33			87	80				
08:30		***95***	34			96	93				
08:45		92	24	339	131	84	69	337	319	676	450
09:00		59	29			86	85				
09:15		62	22			75	66				
09:30		85	21			88	74				
09:45		70	28	276	100	96	91	345	316	621	416
10:00		76	22			104	52				
10:15		70	23			105	71				
10:30		58	20			96	56				
10:45		66	19	270	84	***100***	34	405	213	675	297
11:00		55	11			***111***	38				
11:15		65	13			***117***	32				
11:30		63	9			***99***	31				
11:45		80	9	263	42	95	20	422	121	685	163
Total		1575	2203			2127	4801			3702	7004
Percent		41.7%	58.3%			30.7%	69.3%			34.6%	65.4%
AM Peak		07:45				10:45					
Vol.		351				427					
P.H.F.		0.844				0.912					
PM Peak			12:00				04:15				
Vol.			287				657				
P.H.F.			0.920				0.933				
Total		3245	4497			4291	9441			7536	13938
Percent		41.9%	58.1%			31.2%	68.8%			35.1%	64.9%

ADT ADT 10,737 AADT 10,737

Crossroads Engineering

13284 Sw 120th St.
Miami, FL 33186
305-233-3997

CLIENT:TRAFTECH
JOB NO:2013-042
PROJECT:KEY WEST CITY HALL
COUNTY:MONROE

UNITED ST WEST OF WHITE ST

UNITED ST WEST OF WHITE ST

Date Start: 18-Jun-13
Date End: 19-Jun-13

Start	18-Jun-13	EB		Hour Totals		WB		Hour Totals		Combined Totals	
Time	Tue	Morning	Afternoon	Morning	Afternoon	Morning	Afternoon	Morning	Afternoon	Morning	Afternoon
12:00		24	74			2	41				
12:15		14	68			6	33				
12:30		8	62			0	37				
12:45		8	66	54	270	0	51	8	162	62	432
01:00		11	57			5	28				
01:15		5	59			4	37				
01:30		4	59			2	40				
01:45		5	53	25	228	1	28	12	133	37	361
02:00		3	81			2	35				
02:15		4	56			0	47				
02:30		5	68			2	27				
02:45		6	82	18	287	1	***46***	5	155	23	442
03:00		5	***87***			2	***59***				
03:15		4	***73***			0	***39***				
03:30		7	***79***			0	***39***				
03:45		0	***86***	16	325	1	35	3	172	19	497
04:00		3	79			2	38				
04:15		1	79			3	35				
04:30		6	80			1	31				
04:45		6	85	16	323	1	42	7	146	23	469
05:00		4	74			5	43				
05:15		6	65			4	47				
05:30		2	70			4	38				
05:45		6	45	18	254	6	33	19	161	37	415
06:00		8	67			10	23				
06:15		19	57			7	28				
06:30		20	61			13	28				
06:45		22	57	69	242	23	29	53	108	122	350
07:00		23	48			28	27				
07:15		29	41			15	23				
07:30		26	45			18	16				
07:45		43	33	121	167	41	19	102	85	223	252
08:00		35	24			41	17				
08:15		39	35			***36***	30				
08:30		45	38			***39***	13				
08:45		44	50	163	147	***46***	27	162	87	325	234
09:00		56	44			***47***	29				
09:15		54	48			27	17				
09:30		44	43			30	23				
09:45		49	40	203	175	34	6	138	75	341	250
10:00		40	43			31	10				
10:15		50	35			33	8				
10:30		53	44			31	12				
10:45		63	22	206	144	27	12	122	42	328	186
11:00		***59***	22			24	6				
11:15		***74***	26			30	9				
11:30		***64***	16			28	5				
11:45		***78***	13	275	77	36	4	118	24	393	101
Total		1184	2639			749	1350			1933	3989
Percent		31.0%	69.0%			35.7%	64.3%			32.6%	67.4%
AM Peak		11:00				08:15					
Vol.		275				168					
P.H.F.		0.881				0.894					
PM Peak			03:00				02:45				
Vol.			325				183				
P.H.F.			0.934				0.775				

Crossroads Engineering

13284 Sw 120th St.
Miami, FL 33186
305-233-3997

CLIENT:TRAFTECH
JOB NO:2013-042
PROJECT:KEY WEST CITY HALL
COUNTY:MONROE

UNITED ST WEST OF WHITE ST

UNITED ST WEST OF WHITE ST

Date Start: 18-Jun-13
Date End: 19-Jun-13

Start Time	19-Jun-13 Wed	EB Morning	EB Afternoon	Hour Totals Morning	Hour Totals Afternoon	WB Morning	WB Afternoon	Hour Totals Morning	Hour Totals Afternoon	Combined Totals Morning	Combined Totals Afternoon
12:00		17	82			6	39				
12:15		16	77			5	43				
12:30		18	82			5	60				
12:45		6	60	57	301	3	35	19	177	76	478
01:00		19	79			5	38				
01:15		3	64			2	38				
01:30		7	50			2	23				
01:45		5	75	34	268	2	37	11	136	45	404
02:00		3	81			1	31				
02:15		4	80			0	46				
02:30		4	60			2	44				
02:45		6	60	17	281	2	40	5	161	22	442
03:00		1	75			1	35				
03:15		4	80			1	35				
03:30		5	71			3	36				
03:45		10	66	20	292	2	50	7	156	27	448
04:00		0	84			2	50				
04:15		7	100			1	74				
04:30		3	73			2	23				
04:45		3	***84***	13	341	4	38	9	185	22	526
05:00		3	***86***			5	***49***				
05:15		8	***104***			3	***76***				
05:30		7	***76***			4	***59***				
05:45		7	62	25	328	4	***44***	16	228	41	556
06:00		12	52			7	30				
06:15		16	49			10	23				
06:30		16	54			7	23				
06:45		18	69	62	224	20	17	44	93	106	317
07:00		19	63			23	28				
07:15		28	54			15	37				
07:30		37	62			17	13				
07:45		33	30	117	209	38	23	93	101	210	310
08:00		42	52			36	25				
08:15		42	44			34	28				
08:30		39	42			***41***	24				
08:45		42	49	165	187	***55***	14	166	91	331	278
09:00		38	39			***43***	21				
09:15		45	28			***35***	10				
09:30		38	43			32	19				
09:45		48	26	169	136	42	18	152	68	321	204
10:00		52	46			40	10				
10:15		48	46			38	7				
10:30		68	28			31	4				
10:45		65	26	233	146	38	16	147	37	380	183
11:00		***72***	31			42	7				
11:15		***75***	29			35	7				
11:30		***70***	28			47	9				
11:45		***68***	16	285	104	38	11	162	34	447	138
Total		1197	2817			831	1467			2028	4284
Percent		29.8%	70.2%			36.2%	63.8%			32.1%	67.9%
AM Peak		11:00				08:30					
Vol.		285				174					
P.H.F.		0.950				0.791					
PM Peak			04:45				05:00				
Vol.			350				228				
P.H.F.			0.841				0.750				
Total		2381	5456			1580	2817			3961	8273
Percent		30.4%	69.6%			35.9%	64.1%			32.4%	67.6%

ADT ADT 6,117 AADT 6,117

Crossroads Engineering

13284 Sw 120th St.
Miami, FL 33186
305-233-3997

CLIENT:TRAFTECH
JOB NO:2013-042
PROJECT:KEY WEST CITY HALL
COUNTY:MONROE

SEMINARY ST WEST OF WHALTON ST

SEMINARY ST WEST OF WHALTON ST

Date Start: 18-Jun-13
Date End: 19-Jun-13

Start	18-Jun-13	EB		Hour Totals		WB		Hour Totals		Combined Totals	
Time	Tue	Morning	Afternoon	Morning	Afternoon	Morning	Afternoon	Morning	Afternoon	Morning	Afternoon
12:00		2	2			3	1				
12:15		0	3			0	7				
12:30		0	1			0	5				
12:45		1	5	3	11	0	11	3	24	6	35
01:00		0	4			0	3				
01:15		0	1			0	4				
01:30		0	3			0	3				
01:45		0	3	0	11	0	4	0	14	0	25
02:00		0	4			0	2				
02:15		0	0			0	6				
02:30		0	1			0	5				
02:45		0	2	0	7	0	5	0	18	0	25
03:00		0	2			0	5				
03:15		0	1			0	6				
03:30		0	3			1	4				
03:45		0	2	0	8	0	7	1	22	1	30
04:00		0	2			0	8				
04:15		0	4			0	5				
04:30		0	***10***			0	***9***				
04:45		0	***9***	0	25	0	***8***	0	30	0	55
05:00		0	***8***			0	***9***				
05:15		0	***11***			0	***13***				
05:30		0	5			1	9				
05:45		0	3	0	27	0	3	1	34	1	61
06:00		0	2			0	7				
06:15		0	0			1	5				
06:30		0	3			0	3				
06:45		1	4	1	9	1	2	2	17	3	26
07:00		2	2			0	4				
07:15		0	2			2	3				
07:30		1	0			3	5				
07:45		3	0	6	4	10	1	15	13	21	17
08:00		2	0			***8***	3				
08:15		0	6			***9***	3				
08:30		***9***	1			***8***	3				
08:45		***6***	1	17	8	***17***	3	42	12	59	20
09:00		***5***	0			7	1				
09:15		***2***	1			1	1				
09:30		0	0			5	1				
09:45		7	2	14	3	6	4	19	7	33	10
10:00		0	0			9	2				
10:15		1	0			3	0				
10:30		3	0			7	0				
10:45		0	1	4	1	2	1	21	3	25	4
11:00		1	1			5	1				
11:15		5	0			5	0				
11:30		0	1			5	1				
11:45		4	2	10	4	4	0	19	2	29	6
Total		55	118			123	196			178	314
Percent		31.8%	68.2%			38.6%	61.4%			36.2%	63.8%
AM Peak		08:30				08:00					
Vol.		22				42					
P.H.F.		0.611				0.618					
PM Peak			04:30				04:30				
Vol.			38				39				
P.H.F.			0.864				0.750				

Crossroads Engineering

13284 Sw 120th St.
Miami, FL 33186
305-233-3997

CLIENT:TRAFTECH
JOB NO:2013-042
PROJECT:KEY WEST CITY HALL
COUNTY:MONROE

SEMINARY ST WEST OF WHALTON ST

SEMINARY ST WEST OF WHALTON ST

Date Start: 18-Jun-13
Date End: 19-Jun-13

Start Time	19-Jun-13 Wed	EB Morning	EB Afternoon	Hour Totals Morning	Hour Totals Afternoon	WB Morning	WB Afternoon	Hour Totals Morning	Hour Totals Afternoon	Combined Totals Morning	Combined Totals Afternoon
12:00		0	1			0	5				
12:15		2	2			3	3				
12:30		0	2			1	10				
12:45		0	2	2	7	0	8	4	26	6	33
01:00		1	3			1	8				
01:15		0	1			0	5				
01:30		0	5			1	4				
01:45		0	4	1	13	0	6	2	23	3	36
02:00		1	0			0	6				
02:15		0	0			0	7				
02:30		0	4			1	9				
02:45		0	1	1	5	1	5	2	27	3	32
03:00		0	1			0	2				
03:15		1	1			1	3				
03:30		0	4			0	2				
03:45		0	3	1	9	0	3	1	10	2	19
04:00		0	4			2	0				
04:15		0	5			0	4				
04:30		0	4			0	7				
04:45		0	***9***	0	22	0	***7***	2	18	2	40
05:00		0	***8***			0	***11***				
05:15		0	***13***			0	***10***				
05:30		0	***6***			0	***10***				
05:45		0	4	0	31	0	7	0	38	0	69
06:00		0	8			0	3				
06:15		1	2			1	2				
06:30		0	0			2	2				
06:45		1	2	2	12	4	4	7	11	9	23
07:00		0	1			0	1				
07:15		1	0			2	5				
07:30		1	0			4	0				
07:45		4	1	6	2	10	2	16	8	22	10
08:00		***5***	0			***13***	1				
08:15		***2***	2			***8***	0				
08:30		***4***	0			***10***	1				
08:45		***5***	2	16	4	***15***	5	46	7	62	11
09:00		5	1			2	1				
09:15		1	2			2	1				
09:30		0	1			4	1				
09:45		3	1	9	5	4	2	12	5	21	10
10:00		1	0			5	0				
10:15		3	0			3	0				
10:30		1	1			4	0				
10:45		2	0	7	1	6	0	18	0	25	1
11:00		1	4			2	2				
11:15		3	0			3	1				
11:30		0	0			3	0				
11:45		2	0	6	4	5	0	13	3	19	7
Total		51	115			123	176			174	291
Percent		30.7%	69.3%			41.1%	58.9%			37.4%	62.6%
AM Peak		08:00				08:00					
Vol.		16				46					
P.H.F.		0.800				0.767					
PM Peak			04:45				04:45				
Vol.			36				38				
P.H.F.			0.692				0.864				
Total		106	233			246	372			352	605
Percent		31.3%	68.7%			39.8%	60.2%			36.8%	63.2%

ADT ADT 478 AADT 478

Crossroads Engineering

8320 SW 90TH St Miami, FL 33156 786-236-2857

CLIENT: TRAF TECH
JOB NO: 2013-053
PROJECT: KEY WEST CITY HALL
COUNTY:

south st between white st and reynolds st

SOUTH ST BETWEEN WHITE ST AND REYNOLDS S

Date Start: 30-Jul-13
Date End: 31-Jul-13

Start	30-Jul-13	EB		Hour Totals		WB		Hour Totals		Combined Totals	
Time	Tue	Morning	Afternoon	Morning	Afternoon	Morning	Afternoon	Morning	Afternoon	Morning	Afternoon
12:00		2	10			1	3				
12:15		2	19			2	7				
12:30		3	9			2	10				
12:45		2	10	9	48	0	9	5	29	14	77
01:00		3	11			1	10				
01:15		1	16			0	12				
01:30		1	22			0	13				
01:45		2	20	7	69	0	9	1	44	8	113
02:00		0	16			0	5				
02:15		2	21			3	4				
02:30		0	29			0	9				
02:45		0	14	2	80	0	3	3	21	5	101
03:00		0	14			0	***11***				
03:15		1	11			2	***15***				
03:30		2	26			0	***11***				
03:45		0	18	3	69	0	***8***	2	45	5	114
04:00		1	24			0	2				
04:15		1	14			0	5				
04:30		0	***23***			0	6				
04:45		1	***24***	3	85	1	10	1	23	4	108
05:00		1	***37***			0	12				
05:15		0	***24***			0	6				
05:30		1	21			1	7				
05:45		1	18	3	100	1	8	2	33	5	133
06:00		2	17			1	6				
06:15		1	11			1	3				
06:30		2	23			2	7				
06:45		2	8	7	59	3	4	7	20	14	79
07:00		5	11			2	3				
07:15		4	11			3	1				
07:30		9	13			5	5				
07:45		7	16	25	51	12	1	22	10	47	61
08:00		8	5			12	3				
08:15		7	14			5	4				
08:30		9	7			7	4				
08:45		13	14	37	40	11	3	35	14	72	54
09:00		14	15			8	1				
09:15		11	10			4	3				
09:30		9	9			5	1				
09:45		9	4	43	38	4	0	21	5	64	43
10:00		***21***	8			6	2				
10:15		***18***	7			8	0				
10:30		***18***	4			7	2				
10:45		***14***	6	71	25	***6***	0	27	4	98	29
11:00		19	2			***14***	3				
11:15		14	6			***7***	1				
11:30		22	2			***10***	1				
11:45		16	1	71	11	3	1	34	6	105	17
Total		281	675			160	254			441	929
Percent		29.4%	70.6%			38.6%	61.4%			32.2%	67.8%
AM Peak		10:00				10:45					
Vol.		71				37					
P.H.F.		0.845				0.661					
PM Peak			04:30				03:00				
Vol.			108				45				
P.H.F.			0.730				0.750				

Crossroads Engineering

8320 SW 90TH St Miami, FL 33156 786-236-2857

CLIENT: TRAF TECH
JOB NO: 2013-053
PROJECT: KEY WEST CITY HALL
COUNTY:

south st between white st and reynolds st

SOUTH ST BETWEEN WHITE ST AND REYNOLDS S

Date Start: 30-Jul-13
Date End: 31-Jul-13

Start	31-Jul-13	EB		Hour Totals		WB		Hour Totals		Combined Totals	
Time	Wed	Morning	Afternoon	Morning	Afternoon	Morning	Afternoon	Morning	Afternoon	Morning	Afternoon
12:00		2	13			0	6				
12:15		4	33			2	6				
12:30		3	20			0	***8***				
12:45		3	17	12	83	0	***15***	2	35	14	118
01:00		1	14			0	***8***				
01:15		1	15			0	***14***				
01:30		4	23			1	6				
01:45		3	21	9	73	0	5	1	33	10	106
02:00		0	15			0	6				
02:15		2	21			2	9				
02:30		2	15			1	2				
02:45		1	17	5	68	0	8	3	25	8	93
03:00		0	18			0	7				
03:15		1	21			0	5				
03:30		0	13			0	11				
03:45		0	23	1	75	0	9	0	32	1	107
04:00		0	24			1	9				
04:15		0	21			0	9				
04:30		0	16			0	5				
04:45		3	***18***	3	79	1	9	2	32	5	111
05:00		1	***33***			1	7				
05:15		0	***25***			0	5				
05:30		0	***20***			1	10				
05:45		0	15	1	93	2	4	4	26	5	119
06:00		2	22			0	6				
06:15		3	16			1	7				
06:30		3	12			1	4				
06:45		3	10	11	60	3	6	5	23	16	83
07:00		4	8			3	2				
07:15		4	11			3	7				
07:30		12	8			5	4				
07:45		7	8	27	35	10	4	21	17	48	52
08:00		14	11			11	2				
08:15		18	12			***6***	1				
08:30		12	15			***11***	1				
08:45		14	16	58	54	***10***	2	38	6	96	60
09:00		12	14			***12***	1				
09:15		7	11			3	2				
09:30		10	9			4	3				
09:45		***15***	8	44	42	5	5	24	11	68	53
10:00		***18***	9			6	4				
10:15		***18***	6			6	2				
10:30		***19***	7			8	3				
10:45		15	10	70	32	6	1	26	10	96	42
11:00		13	7			4	2				
11:15		19	1			5	0				
11:30		16	0			12	3				
11:45		16	5	64	13	8	0	29	5	93	18
Total		305	707			155	255			460	962
Percent		30.1%	69.9%			37.8%	62.2%			32.3%	67.7%
AM Peak		09:45				08:15					
Vol.		70				39					
P.H.F.		0.921				0.813					
PM Peak			04:45				00:30				
Vol.			96				45				
P.H.F.			0.727				0.750				
Total		586	1382			315	509			901	1891
Percent		29.8%	70.2%			38.2%	61.8%			32.3%	67.7%

ADT ADT 1,396 AADT 1,396

Crossroads Engineering

13284 Sw 120th St.
Miami, FL 33186
305-233-3997

CLIENT:TRAFTECH
JOB NO:2013-042
PROJECT: KEY WEST CITY HALL
COUNTY:MONROE

GRINNELL ST BETWEEN UNITED ST AND SEMINARY ST

GRINELL ST BETWEEN UNITED ST AND SEMINARY ST
Date Start: 19-Jun-12
Date End: 20-Jun-12

Start	19-Jun-12	NB		Hour Totals		SB		Hour Totals		Combined Totals	
Time	Tue	Morning	Afternoon	Morning	Afternoon	Morning	Afternoon	Morning	Afternoon	Morning	Afternoon
12:00		5	7			8	8				
12:15		2	***10***			2	9				
12:30		0	***13***			0	13				
12:45		0	***13***	7	43	0	23	10	53	17	96
01:00		2	***12***			5	12				
01:15		0	3			1	11				
01:30		0	7			0	8				
01:45		0	5	2	27	1	12	7	43	9	70
02:00		0	8			0	12				
02:15		1	2			0	5				
02:30		1	7			2	18				
02:45		0	7	2	24	7	5	9	40	11	64
03:00		0	8			2	14				
03:15		1	9			1	10				
03:30		2	6			1	13				
03:45		0	5	3	28	0	8	4	45	7	73
04:00		0	7			2	15				
04:15		2	7			1	9				
04:30		0	4			0	9				
04:45		1	9	3	27	3	***19***	6	52	9	79
05:00		0	9			0	***27***				
05:15		1	10			2	***19***				
05:30		1	16			0	***13***				
05:45		0	6	2	41	1	7	3	66	5	107
06:00		0	5			1	9				
06:15		2	7			3	2				
06:30		0	3			1	5				
06:45		2	4	4	19	2	4	7	20	11	39
07:00		1	6			2	8				
07:15		4	3			3	2				
07:30		5	6			4	8				
07:45		13	3	23	18	15	8	24	26	47	44
08:00		10	3			6	2				
08:15		8	5			***8***	7				
08:30		6	5			***17***	10				
08:45		***13***	6	37	19	***14***	8	45	27	82	46
09:00		***9***	4			***15***	5				
09:15		***6***	1			7	8				
09:30		***15***	4			14	5				
09:45		9	3	39	12	17	7	53	25	92	37
10:00		8	2			1	2				
10:15		6	5			5	5				
10:30		7	1			8	5				
10:45		5	2	26	10	4	5	18	17	44	27
11:00		8	2			8	2				
11:15		14	1			13	2				
11:30		8	0			9	2				
11:45		8	1	38	4	13	1	43	7	81	11
Total		186	272			229	421			415	693
Percent		40.6%	59.4%			35.2%	64.8%			37.5%	62.5%
AM Peak		08:45				08:15					
Vol.		43				54					
P.H.F.		0.717				0.794					
PM Peak			00:15				04:45				
Vol.			48				78				
P.H.F.			0.923				0.722				

Crossroads Engineering

13284 Sw 120th St.
Miami, FL 33186
305-233-3997

CLIENT:TRAFTECH
JOB NO:2013-042
PROJECT: KEY WEST CITY HALL
COUNTY:MONROE

GRINNELL ST BETWEEN UNITED ST AND SEMINARY ST

GRINELL ST BETWEEN UNITED ST AND SEMINARY ST
Date Start: 19-Jun-12
Date End: 20-Jun-12

Start Time	20-Jun-12 Wed	NB Morning	NB Afternoon	Hour Totals Morning	Hour Totals Afternoon	SB Morning	SB Afternoon	Hour Totals Morning	Hour Totals Afternoon	Combined Totals Morning	Combined Totals Afternoon
12:00		0	7			2	6				
12:15		4	4			7	2				
12:30		1	10			1	8				
12:45		3	9	8	30	6	10	16	26	24	56
01:00		0	11			1	9				
01:15		1	3			5	12				
01:30		1	7			0	14				
01:45		1	4	3	25	1	12	7	47	10	72
02:00		0	6			0	10				
02:15		1	4			3	7				
02:30		1	11			1	14				
02:45		0	14	2	35	1	20	5	51	7	86
03:00		1	8			1	11				
03:15		0	9			3	14				
03:30		1	7			1	18				
03:45		0	5	2	29	0	10	5	53	7	82
04:00		0	5			0	10				
04:15		1	6			4	21				
04:30		2	5			2	***16***				
04:45		2	9	5	25	1	***21***	7	68	12	93
05:00		0	***12***			0	***24***				
05:15		0	***9***			0	***23***				
05:30		0	***14***			1	16				
05:45		0	***11***	0	46	2	13	3	76	3	122
06:00		0	5			2	13				
06:15		0	7			1	6				
06:30		1	3			0	5				
06:45		2	4	3	19	1	7	4	31	7	50
07:00		2	4			1	9				
07:15		3	3			5	4				
07:30		7	0			5	3				
07:45		***16***	4	28	11	10	2	21	18	49	29
08:00		***20***	1			***14***	3				
08:15		***13***	5			***10***	7				
08:30		***8***	1			***15***	3				
08:45		11	4	52	11	***17***	5	56	18	108	29
09:00		9	4			13	4				
09:15		4	3			3	10				
09:30		5	3			13	2				
09:45		9	5	27	15	5	7	34	23	61	38
10:00		7	4			7	4				
10:15		9	1			5	5				
10:30		6	2			9	0				
10:45		4	0	26	7	8	4	29	13	55	20
11:00		5	3			13	6				
11:15		5	3			7	2				
11:30		7	0			6	1				
11:45		8	2	25	8	3	5	29	14	54	22
Total		181	261			216	438			397	699
Percent		41.0%	59.0%			33.0%	67.0%			36.2%	63.8%
AM Peak		07:45				08:00					
Vol.		57				56					
P.H.F.		0.713				0.824					
PM Peak			05:00				04:30				
Vol.			46				84				
P.H.F.			0.821				0.875				
Total		367	533			445	859			812	1392
Percent		40.8%	59.2%			34.1%	65.9%			36.8%	63.2%

ADT ADT 1,102 AADT 1,102

Crossroads Engineering

13284 Sw 120th St.
Miami, FL 33186
305-233-3997

CLIENT:TRAFTECH
JOB NO:2013-042
PROJECT:KEY WEST CITY HALL
COUNTY:MONROE

FLAGLER AVE EAST OF WHITE ST

FLAGLER AVE EAST OF WHITE ST

Date Start: 18-Jun-13
Date End: 19-Jun-13

Start	18-Jun-13	EB		Hour Totals		WB		Hour Totals		Combined Totals	
Time	Tue	Morning	Afternoon	Morning	Afternoon	Morning	Afternoon	Morning	Afternoon	Morning	Afternoon
12:00		18	70			11	77				
12:15		10	61			5	89				
12:30		13	59			7	92				
12:45		9	70	50	260	2	111	25	369	75	629
01:00		8	64			4	102				
01:15		6	62			5	89				
01:30		5	61			3	99				
01:45		6	59	25	246	4	87	16	377	41	623
02:00		5	63			3	75				
02:15		3	50			3	79				
02:30		5	64			2	91				
02:45		5	67	18	244	3	104	11	349	29	593
03:00		4	65			4	89				
03:15		2	71			5	87				
03:30		5	66			2	97				
03:45		4	74	15	276	4	80	15	353	30	629
04:00		6	119			2	73				
04:15		5	108			6	67				
04:30		4	124			1	69				
04:45		10	119	25	470	5	87	14	296	39	766
05:00		8	125			3	74				
05:15		8	137			18	72				
05:30		9	108			13	67				
05:45		15	118	40	488	12	79	46	292	86	780
06:00		12	100			15	86				
06:15		24	87			34	54				
06:30		21	63			44	67				
06:45		38	68	95	318	43	67	136	274	231	592
07:00		39	56			36	42				
07:15		31	50			58	54				
07:30		54	66			89	45				
07:45		75	50	199	222	72	38	255	179	454	401
08:00		68	44			89	41				
08:15		61	51			80	68				
08:30		70	52			97	34				
08:45		72	43	271	190	87	37	353	180	624	370
09:00		65	49			79	33				
09:15		58	53			97	21				
09:30		63	41			85	27				
09:45		72	34	258	177	79	31	340	112	598	289
10:00		54	35			84	24				
10:15		65	38			66	21				
10:30		65	31			58	18				
10:45		74	27	258	131	65	15	273	78	531	209
11:00		70	22			62	18				
11:15		55	27			50	13				
11:30		59	12			54	8				
11:45		68	14	252	75	80	40	246	79	498	154
Total		1506	3097			1730	2938			3236	6035
Percent		32.7%	67.3%			37.1%	62.9%			34.9%	65.1%
AM Peak											
Vol.											
P.H.F.											
PM Peak											
Vol.											
P.H.F.											

Crossroads Engineering

13284 Sw 120th St.
Miami, FL 33186
305-233-3997

CLIENT:TRAFTECH
JOB NO:2013-042
PROJECT:KEY WEST CITY HALL
COUNTY:MONROE

FLAGLER AVE EAST OF WHITE ST

FLAGLER AVE EAST OF WHITE ST

Date Start: 18-Jun-13
Date End: 19-Jun-13

Start Time	19-Jun-13 Wed	EB Morning	EB Afternoon	Hour Totals Morning	Hour Totals Afternoon	WB Morning	WB Afternoon	Hour Totals Morning	Hour Totals Afternoon	Combined Totals Morning	Combined Totals Afternoon
12:00		14	69			11	76				
12:15		11	76			7	86				
12:30		20	62			12	80				
12:45		12	78	57	285	7	93	37	335	94	620
01:00		11	59			7	79				
01:15		11	64			7	75				
01:30		9	64			5	80				
01:45		8	60	39	247	5	72	24	306	63	553
02:00		11	72			6	72				
02:15		4	67			3	71				
02:30		8	68			5	78				
02:45		5	63	28	270	4	82	18	303	46	573
03:00		9	59			6	73				
03:15		3	65			4	74				
03:30		9	82			5	88				
03:45		5	71	26	277	4	84	19	319	45	596
04:00		5	72			3	81				
04:15		3	80			4	82				
04:30		8	76			5	81				
04:45		4	86	20	314	4	95	16	339	36	653
05:00		4	84			3	87				
05:15		10	103			14	96				
05:30		6	81			10	82				
05:45		8	80	28	348	11	88	38	353	66	701
06:00		15	67			16	75				
06:15		15	55			26	53				
06:30		20	58			33	61				
06:45		22	61	72	241	34	63	109	252	181	493
07:00		33	59			46	50				
07:15		30	59			56	55				
07:30		38	52			76	47				
07:45		53	57	154	227	75	47	253	199	407	426
08:00		69	48			82	43				
08:15		64	47			75	56				
08:30		67	48			85	40				
08:45		66	48	266	191	79	42	321	181	587	372
09:00		77	53			81	42				
09:15		65	58			84	39				
09:30		55	39			73	32				
09:45		66	49	263	199	75	39	313	152	576	351
10:00		53	58			71	40				
10:15		66	38			68	29				
10:30		67	41			65	29				
10:45		57	35	243	172	64	24	268	122	511	294
11:00		66	30			66	24				
11:15		66	24			60	18				
11:30		77	26			68	17				
11:45		65	21	274	101	76	17	270	76	544	177
Total		1470	2872			1686	2937			3156	5809
Percent		33.9%	66.1%			36.5%	63.5%			35.2%	64.8%
AM Peak											
Vol.											
P.H.F.											
PM Peak											
Vol.											
P.H.F.											
Total		2976	5969			3416	5875			6392	11844
Percent		33.3%	66.7%			36.8%	63.2%			35.1%	64.9%

ADT ADT 9,118 AADT 9,118

APPENDIX D

ITE Trip Generation Data

Land Use: 520
Elementary School

Description

Elementary schools typically serve students attending kindergarten through the fifth or sixth grade. Elementary schools are usually centrally located in residential communities in order to facilitate student access and have no student drivers. This land use consists of schools where bus service is usually provided to students living beyond a specified distance from the school. Both public and private elementary schools are included in this land use. Middle school/junior high school (Land Use 522), high school (Land Use 530), private school (K-8) (Land Use 534) and private school (K-12) (Land Use 536) are related uses.

Additional Data

Average weekday transit trip ends—

> Elementary school students generally used school buses more than regular transit and were dropped off and picked up more than high school students, who were apt to walk longer distances, ride bicycles, or, in some cases, drive to school. The percentage of students at the sites who were transported to school via bus varied considerably. Some sites experienced higher than average trip rates because many students did not utilize the available school bus service. Due to the varied transit and school bus usage at these sites, it is desirable that future studies report additional detail on the percentage of students who were bused to school and the percentage that were dropped off and picked up.

The elementary schools surveyed exhibited significant variations in terms of facilities provided. Because the ratio of floor space to student population varied widely among the schools surveyed, the number of students may be a more reliable independent variable on which to establish trip generation rates.

Peak hours of the generator—

> The weekday A.M. peak hour of the generator typically coincided with the peak hour of the adjacent street traffic; therefore, only one A.M. peak hour, which represents both the peak hour of the generator and the peak hour of the adjacent street traffic, is displayed. The weekday P.M. peak hour varied between 2:00 p.m. and 4:00 p.m.

The sites were surveyed between the mid-1970s and the 2000s throughout the United States and Canada.

Many of the studies included in this land use did not indicate if the sites surveyed were public, private, or charter schools. To assist in the future analysis of this land use, it is important that this information be collected and included in trip generation data submissions.

Source Numbers

7, 32, 86, 186, 383, 390, 395, 444, 533, 536, 572, 579, 583, 609, 611, 612, 613, 632, 707

Elementary School
(520)

Average Vehicle Trip Ends vs: **Students**
On a: **Weekday**

Number of Studies: 33
Average Number of Students: 620
Directional Distribution: 50% entering, 50% exiting

Trip Generation per Student

Average Rate	Range of Rates	Standard Deviation
1.29	0.45 - 2.45	1.26

Data Plot and Equation

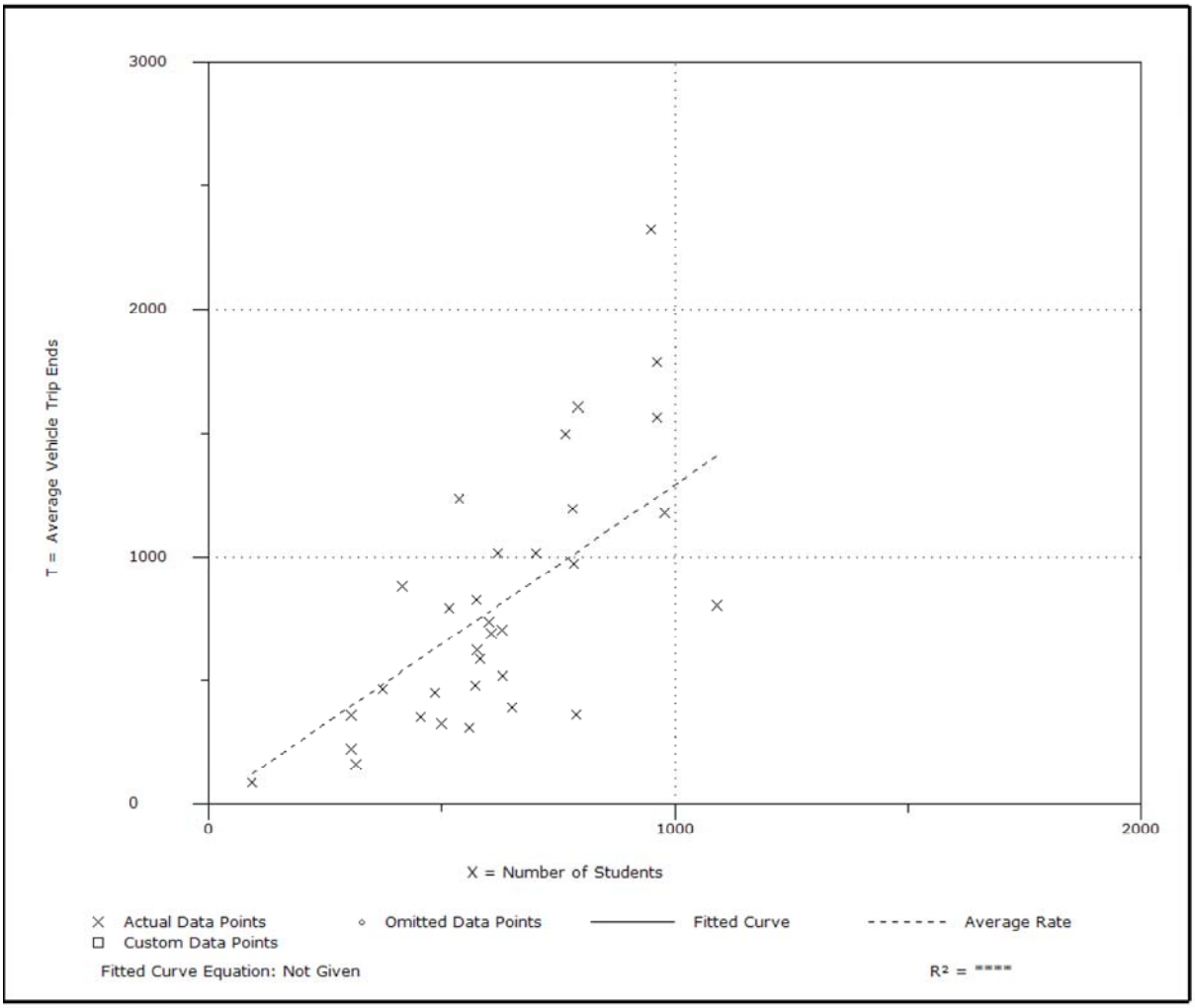

Trip Generation, 9th Edition

Elementary School
(520)

Average Vehicle Trip Ends vs: **Students**
On a: **Weekday**
A.M. Peak Hour of Generator

Number of Studies: 49
Average Number of Students: 630
Directional Distribution: 55% entering, 45% exiting

Trip Generation per Student

Average Rate	Range of Rates	Standard Deviation
0.45	0.11 - 0.92	0.70

Data Plot and Equation

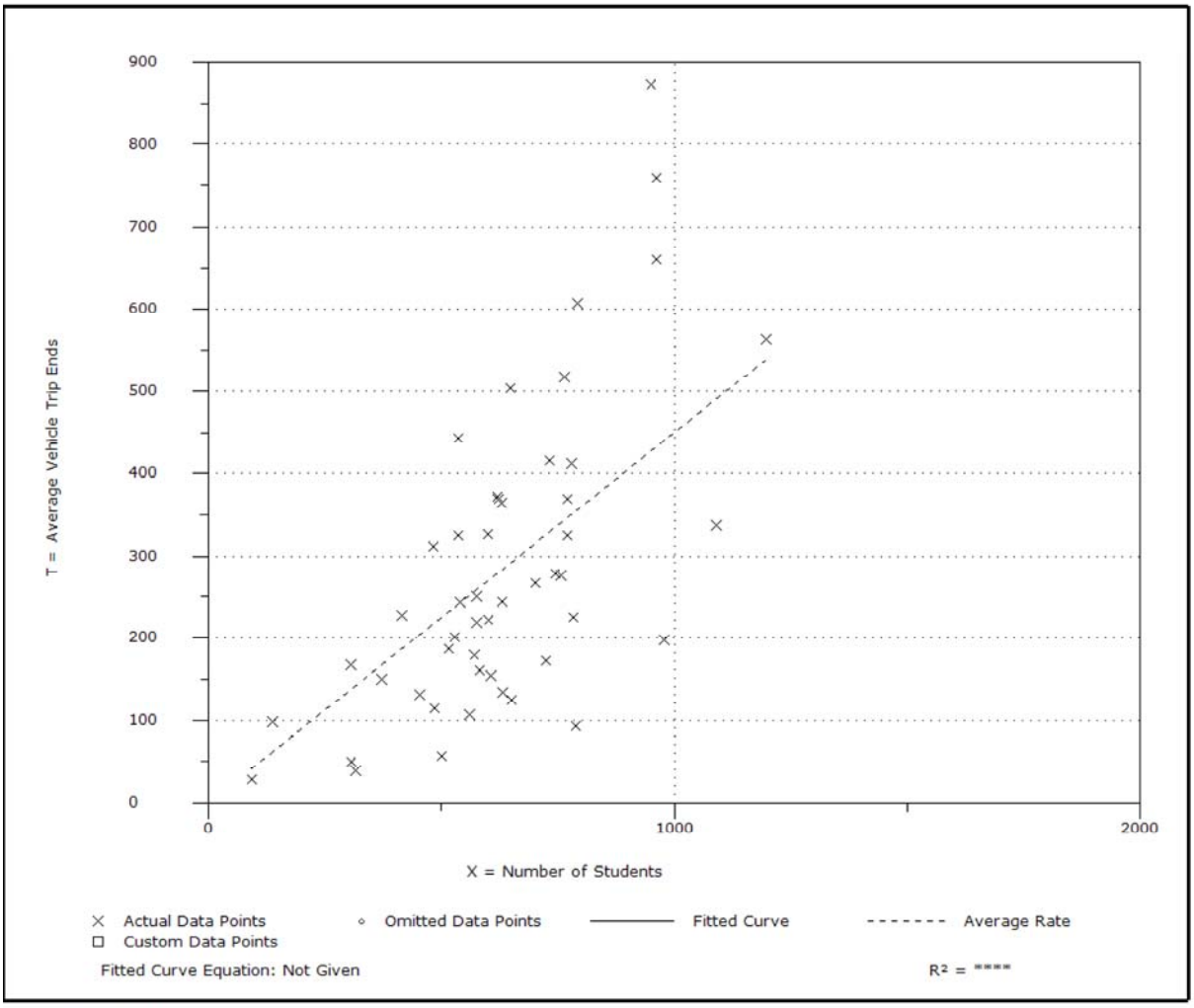

Trip Generation, 9th Edition

Elementary School
(520)

Average Vehicle Trip Ends vs: **Students**
On a: **Weekday**
P.M. Peak Hour of Generator

Number of Studies: 45
Average Number of Students: 642
Directional Distribution: 45% entering, 55% exiting

Trip Generation per Student

Average Rate	Range of Rates	Standard Deviation
0.28	0.09 - 0.50	0.54

Data Plot and Equation

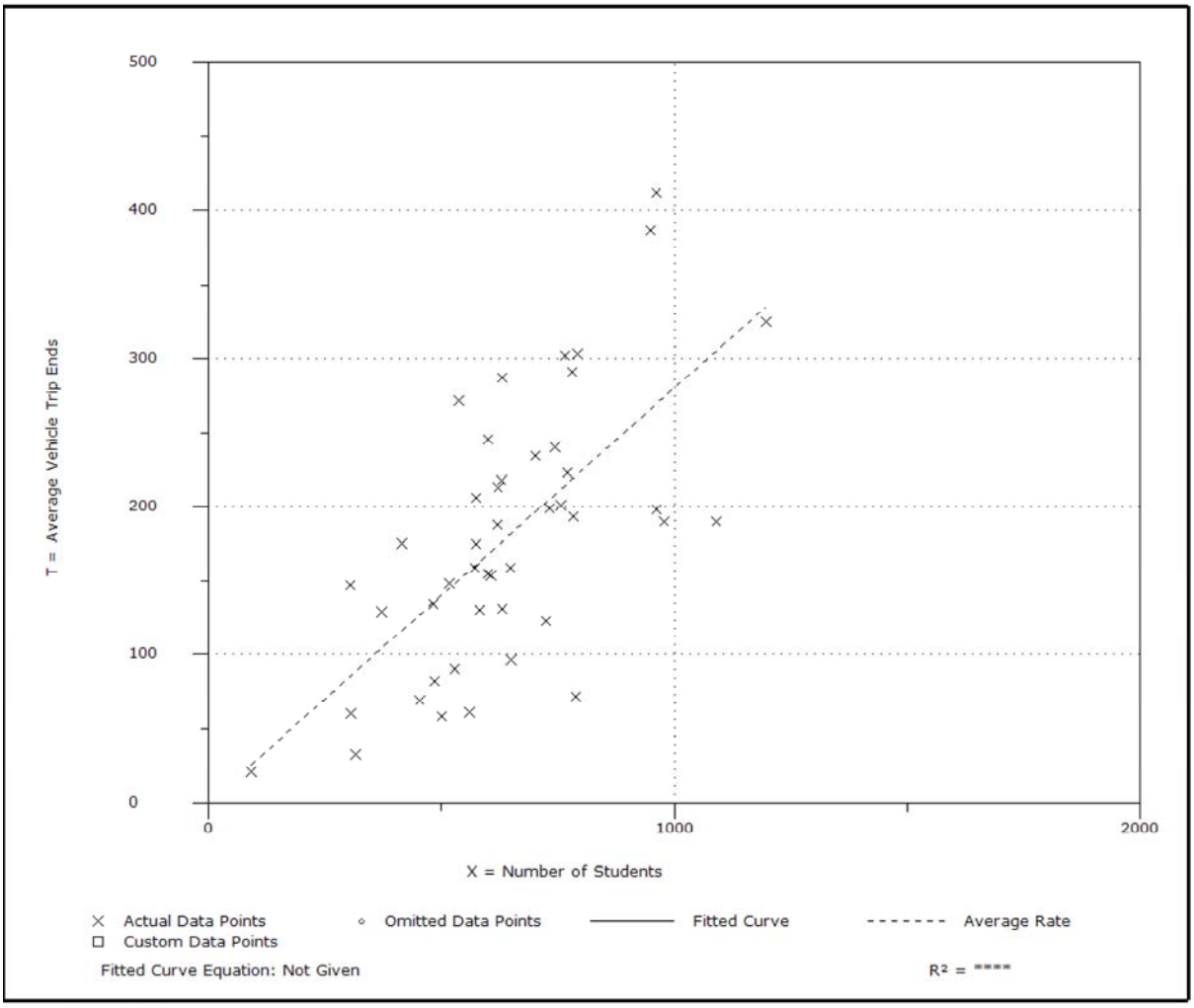

Trip Generation, 9th Edition

Elementary School
(520)

Average Vehicle Trip Ends vs: **Students**
On a: **Weekday**
Peak Hour of Adjacent Street Traffic
One Hour Between 4 and 6 p.m.

Number of Studies: 21
Average Number of Students: 684
Directional Distribution: 49% entering, 51% exiting

Trip Generation per Student

Average Rate	Range of Rates	Standard Deviation
0.15	0.05 - 0.37	0.40

Data Plot and Equation

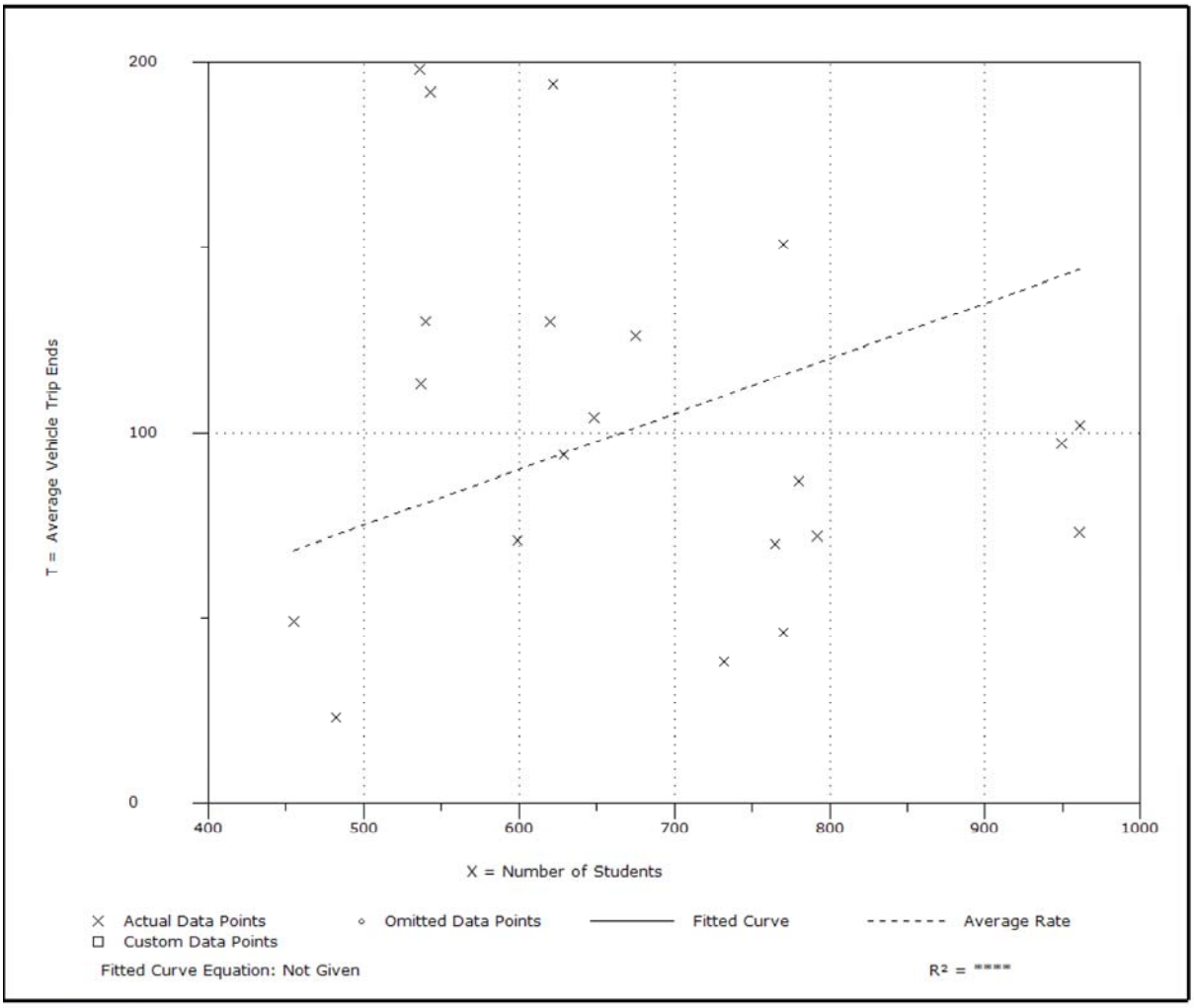

Trip Generation, 9th Edition

Land Use: 733
Government Office Complex

Description

A government office complex is a related group of buildings where a variety of functions of a city, county, state, federal, other governmental unit, or multiple governmental units are carried out. This complex differs from a government office building (Land Use 730) in that it is a group of buildings that are interconnected by pedestrian walkways.

Additional Data

The sites were surveyed in 1967 and 1999 in California.

Source Numbers

8, 508

Government Office Complex
(733)

Average Vehicle Trip Ends vs: **1000 Sq. Feet Gross Floor Area**
On a: **Weekday**

Number of Studies: 2
Average 1000 Sq. Feet GFA: 104
Directional Distribution: 50% entering, 50% exiting

Trip Generation per 1000 Sq. Feet Gross Floor Area

Average Rate	Range of Rates	Standard Deviation
27.92	25.00 - 33.97	*

Data Plot and Equation

Caution - Use Carefully - Small Sample Size

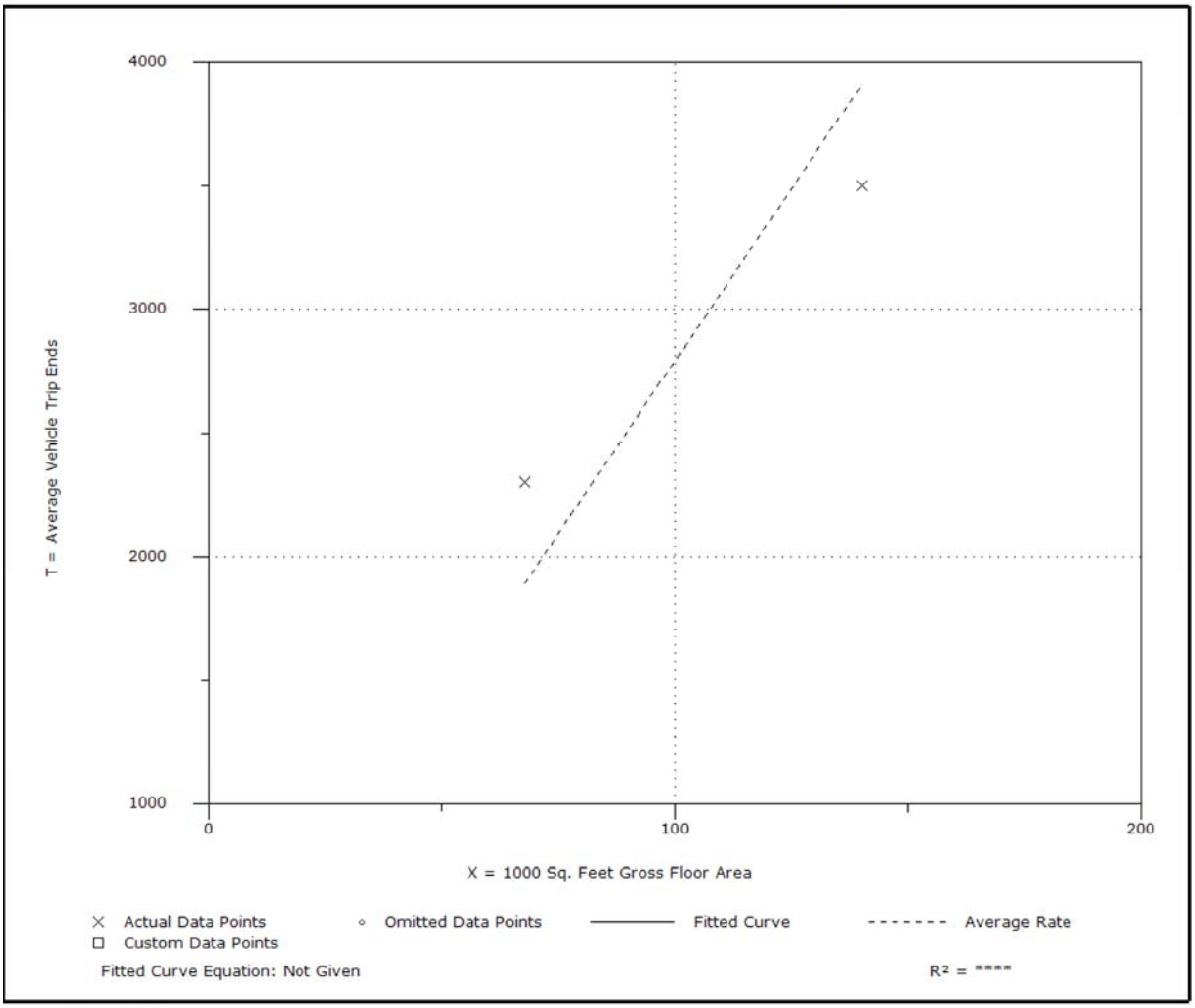

Trip Generation, 9th Edition

Government Office Complex
(733)

Average Vehicle Trip Ends vs: **1000 Sq. Feet Gross Floor Area**
On a: **Weekday**
Peak Hour of Adjacent Street Traffic
One Hour Between 7 and 9 a.m.

Number of Studies: 2
Average 1000 Sq. Feet GFA: 104
Directional Distribution: 89% entering, 11% exiting

Trip Generation per 1000 Sq. Feet Gross Floor Area

Average Rate	Range of Rates	Standard Deviation
2.21	2.13 - 2.25	*

Data Plot and Equation

Caution - Use Carefully - Small Sample Size

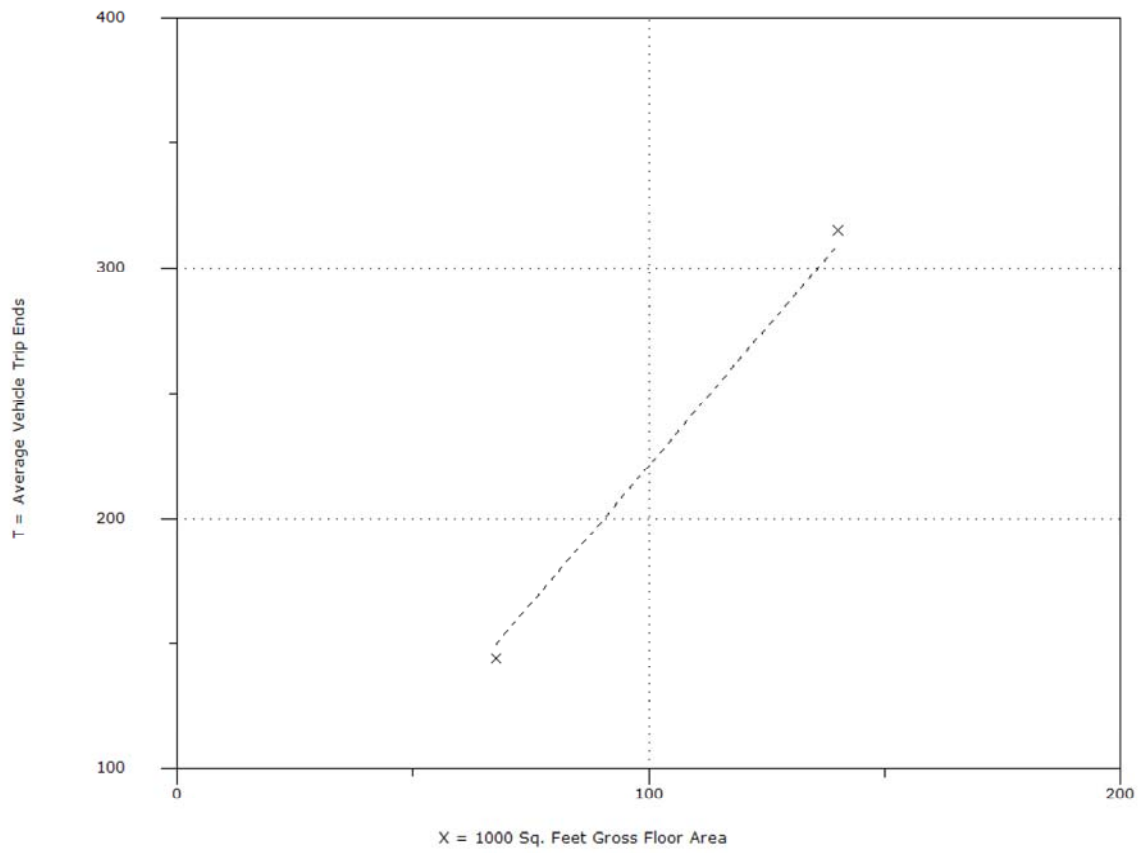

× Actual Data Points ◦ Omitted Data Points ——— Fitted Curve - - - - - - - Average Rate
□ Custom Data Points

Fitted Curve Equation: Not Given R^2 = ****

Trip Generation, 9th Edition

Government Office Complex
(733)

Average Vehicle Trip Ends vs: **1000 Sq. Feet Gross Floor Area**
On a: **Weekday**
Peak Hour of Adjacent Street Traffic
One Hour Between 4 and 6 p.m.

Number of Studies: 2
Average 1000 Sq. Feet GFA: 104
Directional Distribution: 31% entering, 69% exiting

Trip Generation per 1000 Sq. Feet Gross Floor Area

Average Rate	Range of Rates	Standard Deviation
2.85	2.82 - 2.86	*

Data Plot and Equation

Caution - Use Carefully - Small Sample Size

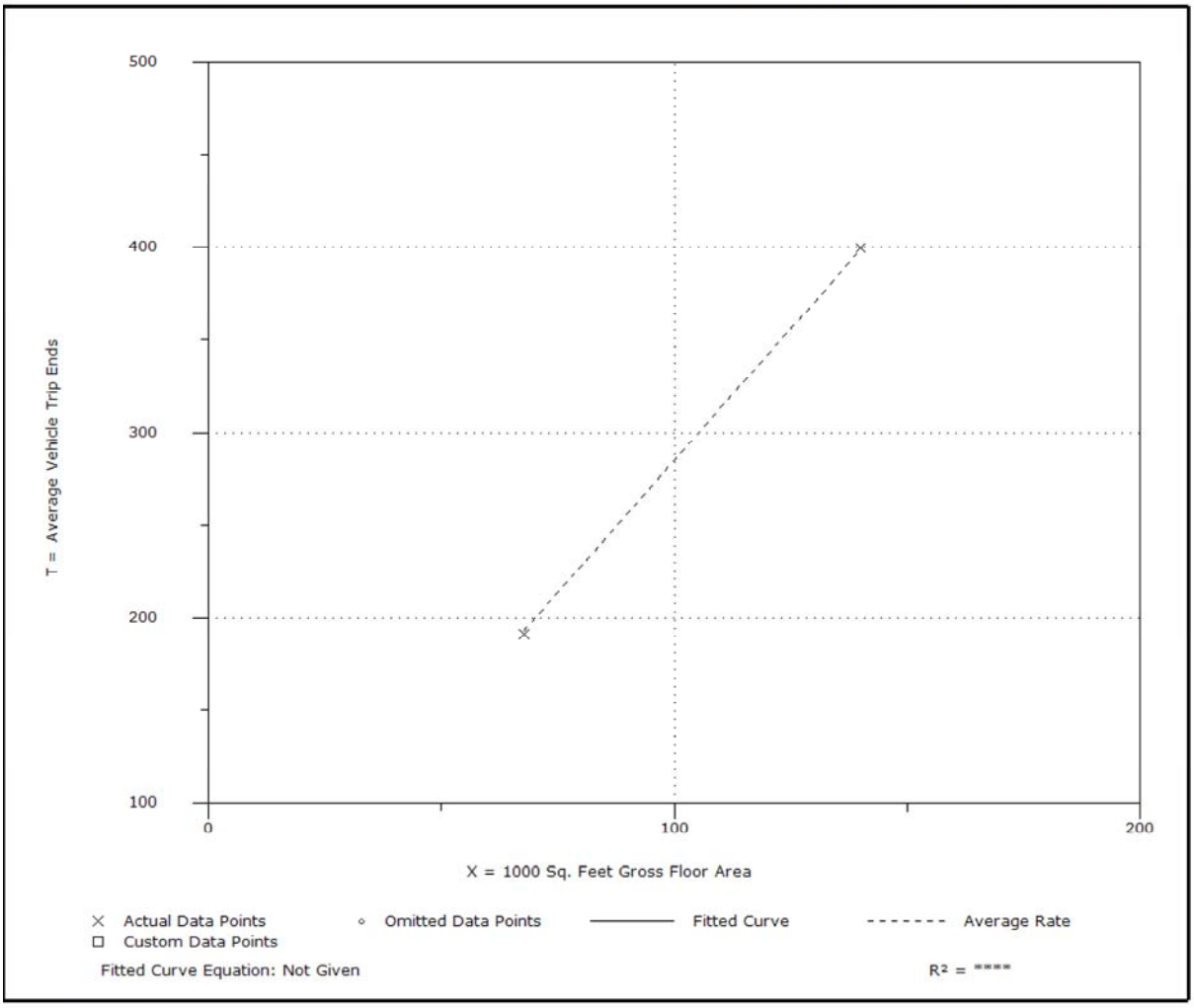

Trip Generation, 9th Edition

APPENDIX E

FDOT Peak Season Conversion Factor Report

2012 PEAK SEASON FACTOR CATEGORY REPORT - REPORT TYPE: ALL
CATEGORY: 9000 MONROE COUNTYWIDE

MOCF: 0.91

WEEK	DATES	SF	PSCF
1	01/01/2012 - 01/07/2012	1.03	1.13
2	01/08/2012 - 01/14/2012	1.00	1.10
3	01/15/2012 - 01/21/2012	0.97	1.06
* 4	01/22/2012 - 01/28/2012	0.95	1.04
* 5	01/29/2012 - 02/04/2012	0.94	1.03
* 6	02/05/2012 - 02/11/2012	0.92	1.01
* 7	02/12/2012 - 02/18/2012	0.91	1.00
* 8	02/19/2012 - 02/25/2012	0.90	0.99
* 9	02/26/2012 - 03/03/2012	0.89	0.97
*10	03/04/2012 - 03/10/2012	0.88	0.96
*11	03/11/2012 - 03/17/2012	0.87	0.95
*12	03/18/2012 - 03/24/2012	0.89	0.97
*13	03/25/2012 - 03/31/2012	0.90	0.99
*14	04/01/2012 - 04/07/2012	0.92	1.01
*15	04/08/2012 - 04/14/2012	0.94	1.03
*16	04/15/2012 - 04/21/2012	0.96	1.05
17	04/22/2012 - 04/28/2012	0.96	1.05
18	04/29/2012 - 05/05/2012	0.97	1.06
19	05/06/2012 - 05/12/2012	0.98	1.07
20	05/13/2012 - 05/19/2012	0.99	1.08
21	05/20/2012 - 05/26/2012	0.99	1.08
22	05/27/2012 - 06/02/2012	1.00	1.10
23	06/03/2012 - 06/09/2012	1.00	1.10
24	06/10/2012 - 06/16/2012	1.01	1.11
25	06/17/2012 - 06/23/2012	1.00	1.10
26	06/24/2012 - 06/30/2012	0.99	1.08
27	07/01/2012 - 07/07/2012	0.98	1.07
28	07/08/2012 - 07/14/2012	0.97	1.06
29	07/15/2012 - 07/21/2012	0.96	1.05
30	07/22/2012 - 07/28/2012	0.99	1.08
31	07/29/2012 - 08/04/2012	1.01	1.11
32	08/05/2012 - 08/11/2012	1.04	1.14
33	08/12/2012 - 08/18/2012	1.07	1.17
34	08/19/2012 - 08/25/2012	1.09	1.19
35	08/26/2012 - 09/01/2012	1.11	1.22
36	09/02/2012 - 09/08/2012	1.13	1.24
37	09/09/2012 - 09/15/2012	1.15	1.26
38	09/16/2012 - 09/22/2012	1.14	1.25
39	09/23/2012 - 09/29/2012	1.13	1.24
40	09/30/2012 - 10/06/2012	1.12	1.23
41	10/07/2012 - 10/13/2012	1.11	1.22
42	10/14/2012 - 10/20/2012	1.10	1.20
43	10/21/2012 - 10/27/2012	1.09	1.19
44	10/28/2012 - 11/03/2012	1.08	1.18
45	11/04/2012 - 11/10/2012	1.07	1.17
46	11/11/2012 - 11/17/2012	1.07	1.17
47	11/18/2012 - 11/24/2012	1.06	1.16
48	11/25/2012 - 12/01/2012	1.05	1.15
49	12/02/2012 - 12/08/2012	1.04	1.14
50	12/09/2012 - 12/15/2012	1.03	1.13
51	12/16/2012 - 12/22/2012	1.01	1.11
52	12/23/2012 - 12/29/2012	0.99	1.08
53	12/30/2012 - 12/31/2012	0.97	1.06

* PEAK SEASON

APPENDIX F

FDOT
Historic Traffic Counts

FLORIDA DEPARTMENT OF TRANSPORTATION
TRANSPORTATION STATISTICS OFFICE
2012 HISTORICAL AADT REPORT

COUNTY: 90 - MONROE

SITE: 0025 - WHITE ST, 200' NW SR 5/US-1/TRUMAN AV

YEAR	AADT	DIRECTION 1	DIRECTION 2	*K FACTOR	D FACTOR	T FACTOR
2012	6000 C	N 2700	S 3300	9.00	55.00	8.20
2011	6100 C	N 3000	S 3100	9.00	55.10	8.30
2010	5400 C	N 2600	S 2800	10.26	56.84	10.30
2009	5000 C	N 2600	S 2400	10.23	56.56	8.40
2008	5600 C	N 2700	S 2900	10.45	54.98	8.60
2007	4700 C	N 2500	S 2200	10.00	99.99	9.80
2006	5300 C	N 2800	S 2500	10.08	99.99	12.30
2005	7100 C	N 3400	S 3700	10.40	99.90	4.20
2004	7400 C	N 4200	S 3200	10.00	99.90	3.10
2003	6700 C	N	S	10.10	99.90	4.40
2002	7600 C	N 4300	S 3300	10.00	99.90	5.60
2001	5900 C	N	S	10.00	99.90	6.80
2000	7400 F	N	S	9.90	99.90	6.60
1999	7200 C	N	S	9.50	56.70	4.80
1998	6600 C	N	S	9.50	56.60	2.80
1997	6800 C	N	S	9.60	55.90	3.70

AADT FLAGS: C = COMPUTED; E = MANUAL ESTIMATE; F = FIRST YEAR ESTIMATE
S = SECOND YEAR ESTIMATE; T = THIRD YEAR ESTIMATE; X = UNKNOWN
*K FACTOR: STARTING WITH YEAR 2011 IS STANDARDK, PRIOR YEARS ARE K30 VALUES

FLORIDA DEPARTMENT OF TRANSPORTATION
TRANSPORTATION STATISTICS OFFICE
2012 HISTORICAL AADT REPORT

COUNTY: 90 - MONROE

SITE: 5008 - SR 5/US-1/TRUMAN AV, 200' W WHITE ST

YEAR	AADT	DIRECTION 1	DIRECTION 2	*K FACTOR	D FACTOR	T FACTOR
2012	13600 C	W 6500	E 7100	9.00	55.00	8.20
2011	14700 C	W 7400	E 7300	9.00	55.10	8.30
2010	17700 C	W 8600	E 9100	10.26	56.84	10.30
2009	16800 C	W 8100	E 8700	10.23	56.56	8.40
2008	15200 C	N 8100	S 7100	10.45	54.98	8.60
2007	16800 C	N 9300	S 7500	10.00	55.10	9.80
2006	14800 C	N 7000	S 7800	10.08	55.69	12.30
2005	14000 C	N 7500	S 6500	10.40	55.70	5.50
2004	14300 C	N 7200	S 7100	10.00	56.00	3.10
2003	14000 C	N	S	10.10	56.30	4.40
2002	14500 C	N 7500	S 7000	10.00	54.20	5.60
2001	17000 C	N	S	10.00	55.90	6.80
2000	25100 C	N 9100	S 16000	9.90	54.80	6.60
1999	16000 C	N 7400	S 8600	9.50	56.70	4.80
1998	17400 C	N 8900	S 8500	9.50	56.60	2.80
1997	17000 C	N	S	9.60	55.90	3.70

AADT FLAGS: C = COMPUTED; E = MANUAL ESTIMATE; F = FIRST YEAR ESTIMATE
S = SECOND YEAR ESTIMATE; T = THIRD YEAR ESTIMATE; X = UNKNOWN
*K FACTOR: STARTING WITH YEAR 2011 IS STANDARDK, PRIOR YEARS ARE K30 VALUES

FLORIDA DEPARTMENT OF TRANSPORTATION
TRANSPORTATION STATISTICS OFFICE
2012 HISTORICAL AADT REPORT

COUNTY: 90 - MONROE

SITE: 0026 - WHITE ST, 200' SE SR 5/US-1/TRUMAN AV

YEAR	AADT	DIRECTION 1	DIRECTION 2	*K FACTOR	D FACTOR	T FACTOR
2012	8300 C	N 4300	S 4000	9.00	55.00	8.20
2011	7700 C	N 3900	S 3800	9.00	55.10	8.30
2010	7300 C	N 3700	S 3600	10.26	56.84	10.30
2009	8500 C	N 4300	S 4200	10.23	56.56	8.40
2008	7800 C	N 3700	S 4100	10.45	54.98	8.60
2007	7600 C	N 3600	S 4000	10.00	99.99	9.80
2006	8500 C	N 4000	S 4500	10.08	99.99	12.30
2005	9900 C	N 5000	S 4900	10.40	99.90	4.20
2004	8900 C	N 4800	S 4100	10.00	99.90	3.10
2003	11500 C	N	S	10.10	99.90	4.40
2002	8400 C	N 4500	S 3900	10.00	99.90	5.60
2001	9500 C	N	S	10.00	99.90	6.80
2000	12000 C	N 3700	S 8300	9.90	99.90	6.60
1999	9200 C	N	S	9.50	56.70	4.80
1998	10500 C	N	S	9.50	56.60	2.80
1997	8800 C	N	S	9.60	55.90	3.70

AADT FLAGS: C = COMPUTED; E = MANUAL ESTIMATE; F = FIRST YEAR ESTIMATE
S = SECOND YEAR ESTIMATE; T = THIRD YEAR ESTIMATE; X = UNKNOWN
*K FACTOR: STARTING WITH YEAR 2011 IS STANDARDK, PRIOR YEARS ARE K30 VALUES

FLORIDA DEPARTMENT OF TRANSPORTATION
TRANSPORTATION STATISTICS OFFICE
2012 HISTORICAL AADT REPORT

COUNTY: 90 - MONROE

SITE: 5035 - UNITED ST, 100' E ROYAL ST

YEAR	AADT	DIRECTION 1	DIRECTION 2	*K FACTOR	D FACTOR	T FACTOR
2012	7000 C	W 3400	E 3600	9.00	55.00	8.20
2011	6900 C	W 3300	E 3600	9.00	55.10	8.30
2010	6000 C	W 3000	E 3000	10.26	56.84	10.30
2009	5700 C	W 3100	E 2600	10.23	56.56	8.40
2008	6000 C	N 3200	S 2800	10.45	54.98	8.60
2007	5400 C	N 2400	S 3000	10.00	55.10	9.80
2006	6300 C	N 3000	S 3300	10.08	55.69	12.30
2005	6700 C	N 3500	S 3200	10.40	55.70	6.20
2004	6100 C	N 3200	S 2900	10.00	56.00	3.10
2003	8100 C	N	S	10.10	56.30	4.40
2002	6800 C	N 4200	S 2600	10.00	54.20	5.60
2001	8000 C	N	S	10.00	55.90	6.80
2000	6900 C	N 3900	S 3000	9.90	54.80	6.60
1999	6400 C	N	S	9.50	56.70	4.80
1998	6300 C	N	S	9.50	56.60	2.80
1997	6400 C	N	S	9.60	55.90	3.70

AADT FLAGS: C = COMPUTED; E = MANUAL ESTIMATE; F = FIRST YEAR ESTIMATE
S = SECOND YEAR ESTIMATE; T = THIRD YEAR ESTIMATE; X = UNKNOWN
*K FACTOR: STARTING WITH YEAR 2011 IS STANDARDK, PRIOR YEARS ARE K30 VALUES

FLORIDA DEPARTMENT OF TRANSPORTATION
TRANSPORTATION STATISTICS OFFICE
2012 HISTORICAL AADT REPORT

COUNTY: 90 - MONROE

SITE: 5025 - FLAGLER AV, 200' E WHITE ST

YEAR	AADT	DIRECTION 1	DIRECTION 2	*K FACTOR	D FACTOR	T FACTOR
2012	8700 C	W 4700	E 4000	9.00	55.00	8.20
2011	8200 C	W 4100	E 4100	9.00	55.10	8.30
2010	9200 C	W 4800	E 4400	10.26	56.84	10.30
2009	10500 C	W 6000	E 4500	10.23	56.56	8.40
2008	8600 C	N 3700	S 4900	10.45	54.98	8.60
2007	10300 C	N 4200	S 6100	10.00	55.10	9.80
2006	10200 C	N 5800	S 4400	10.08	55.69	12.30
2005	10100 C	N 4500	S 5600	10.40	55.70	6.20
2004	10200 C	N 4600	S 5600	10.00	56.00	3.10
2003	11500 C	N	S	10.10	56.30	4.40
2002	10200 C	N 4500	S 5700	10.00	54.20	5.60
2001	10000 C	N	S	10.00	55.90	6.80
2000	10400 C	N 4500	S 5900	9.90	54.80	6.60
1999	11000 C	N	S	9.50	56.70	4.80
1998	11000 C	N	S	9.50	56.60	2.80
1997	10000 C	N	S	9.60	55.90	3.70

AADT FLAGS: C = COMPUTED; E = MANUAL ESTIMATE; F = FIRST YEAR ESTIMATE
S = SECOND YEAR ESTIMATE; T = THIRD YEAR ESTIMATE; X = UNKNOWN
*K FACTOR: STARTING WITH YEAR 2011 IS STANDARDK, PRIOR YEARS ARE K30 VALUES

APPENDIX G

Future Traffic Volumes Spreadsheets

FUTURE TURNING MOVEMENT VOLUME ANALYSIS

Truman Avenue and White Street
AM Peak Hour

	White Street Northbound			White Street Southbound			Truman Avenue Eastbound			Truman Avenue Westbound		
Description	Left	Through	Right	Left	Through	Right	Left	Through	Right	Left	Through	Right
Existing Traffic (6/18/2013)	152	229	53	24	163	17	17	106	76	8	11	3
Season Adjustment Factor	1.10	1.10	1.10	1.10	1.10	1.10	1.10	1.10	1.10	1.10	1.10	1.10
2013 Peak Season Traffic	167	252	58	26	179	19	19	117	84	9	12	3
Annual Growth Rate	2.0%	2.0%	2.0%	2.0%	2.0%	2.0%	2.0%	2.0%	2.0%	2.0%	2.0%	2.0%
Construction Adjustment								2.0			2.0	
2016 Background Traffic	177	267	62	28	190	20	20	247	89	9	26	4
New Project Trips	1	1	1	0	7	0	0	0	11	11	0	0
2016 Total Traffic	**178**	**268**	**63**	**28**	**197**	**20**	**20**	**247**	**100**	**20**	**26**	**4**

FUTURE TURNING MOVEMENT VOLUME ANALYSIS

Truman Avenue and White Street
PM Peak Hour

Description	White Street Northbound			White Street Southbound			Truman Avenue Eastbound			Truman Avenue Westbound		
	Left	Through	Right	Left	Through	Right	Left	Through	Right	Left	Through	Right
Existing Traffic (6/18/2013)	133	141	39	70	338	16	24	227	134	12	12	3
Season Adjustment Factor	1.10	1.10	1.10	1.10	1.10	1.10	1.10	1.10	1.10	1.10	1.10	1.10
2013 Peak Season Traffic	146	155	43	77	372	18	26	250	147	13	13	3
Annual Growth Rate	2.0%	2.0%	2.0%	2.0%	2.0%	2.0%	2.0%	2.0%	2.0%	2.0%	2.0%	2.0%
Construction Adjustment								2.0			2.0	
2016 Background Traffic	155	165	46	82	395	19	28	530	156	14	28	4
New Project Trips	11	7	11	0	3	0	0	0	5	5	0	0
2016 Total Traffic	**166**	**172**	**57**	**82**	**398**	**19**	**28**	**530**	**161**	**19**	**28**	**4**

FUTURE TURNING MOVEMENT VOLUME ANALYSIS

United Street and White Street
AM Peak Hour

Description	White Street Northbound			White Street Southbound			United Street Eastbound			United Street Westbound		
	Left	Through	Right	Left	Through	Right	Left	Through	Right	Left	Through	Right
Existing Traffic (6/18/2013)	72	273	7	18	275	24	16	43	91	6	42	16
Season Adjustment Factor	1.10	1.10	1.10	1.10	1.10	1.10	1.10	1.10	1.10	1.10	1.10	1.10
2013 Peak Season Traffic	79	300	8	20	303	26	18	47	100	7	46	18
Annual Growth Rate	2.0%	2.0%	2.0%	2.0%	2.0%	2.0%	2.0%	2.0%	2.0%	2.0%	2.0%	2.0%
2016 Background Traffic	84	319	8	21	321	28	19	50	106	7	49	19
New Project Trips	11	0	0	0	0	29	3	0	1	0	4	0
2016 Total Traffic	**95**	**319**	**8**	**21**	**321**	**57**	**22**	**50**	**107**	**7**	**53**	**19**

FUTURE TURNING MOVEMENT VOLUME ANALYSIS

United Street and White Street
PM Peak Hour

Description	White Street Northbound			White Street Southbound			United Street Eastbound			United Street Westbound		
	Left	Through	Right	Left	Through	Right	Left	Through	Right	Left	Through	Right
Existing Traffic (6/18/2013)	37	284	4	29	503	34	9	125	177	16	42	10
Season Adjustment Factor	1.10	1.10	1.10	1.10	1.10	1.10	1.10	1.10	1.10	1.10	1.10	1.10
2013 Peak Season Traffic	41	312	4	32	553	37	10	138	195	18	46	11
Annual Growth Rate	2.0%	2.0%	2.0%	2.0%	2.0%	2.0%	2.0%	2.0%	2.0%	2.0%	2.0%	2.0%
2016 Background Traffic	43	332	5	34	587	40	11	146	207	19	49	12
New Project Trips	5	0	0	0	0	13	29	4	11	0	2	0
2016 Total Traffic	**48**	**332**	**5**	**34**	**587**	**53**	**40**	**150**	**218**	**19**	**51**	**12**

FUTURE TURNING MOVEMENT VOLUME ANALYSIS

Seminary Street and White Street
AM Peak Hour

Description	White Street Northbound			White Street Southbound			Seminary Street Eastbound			Seminary Street Westbound		
	Left	Through	Right	Left	Through	Right	Left	Through	Right	Left	Through	Right
Existing Traffic (6/18/2013)	28	319	3	11	338	13	2	1	5	3	9	27
Season Adjustment Factor	1.10	1.10	1.10	1.10	1.10	1.10	1.10	1.10	1.10	1.10	1.10	1.10
2013 Peak Season Traffic	31	351	3	12	372	14	2	1	6	3	10	30
Annual Growth Rate	2.0%	2.0%	2.0%	2.0%	2.0%	2.0%	2.0%	2.0%	2.0%	2.0%	2.0%	2.0%
2016 Background Traffic	33	372	4	13	395	15	2	1	6	4	11	32
New Project Trips	4	11	0	0	1	0	0	0	1	0	0	0
2016 Total Traffic	**37**	**383**	**4**	**13**	**396**	**15**	**2**	**1**	**7**	**4**	**11**	**32**

FUTURE TURNING MOVEMENT VOLUME ANALYSIS

Seminary Street and White Street
PM Peak Hour

Description	White Street Northbound			White Street Southbound			Seminary Street Eastbound			Seminary Street Westbound		
	Left	Through	Right	Left	Through	Right	Left	Through	Right	Left	Through	Right
Existing Traffic (6/18/2013)	17	309	3	20	692	11	6	5	8	4	3	15
Season Adjustment Factor	1.10	1.10	1.10	1.10	1.10	1.10	1.10	1.10	1.10	1.10	1.10	1.10
2013 Peak Season Traffic	19	340	3	22	761	12	7	6	9	4	3	17
Annual Growth Rate	2.0%	2.0%	2.0%	2.0%	2.0%	2.0%	2.0%	2.0%	2.0%	2.0%	2.0%	2.0%
2016 Background Traffic	20	361	4	23	808	13	7	6	9	5	4	18
New Project Trips	2	5	0	0	11	0	0	0	4	0	0	0
2016 Total Traffic	**22**	**366**	**4**	**23**	**819**	**13**	**7**	**6**	**13**	**5**	**4**	**18**

FUTURE TURNING MOVEMENT VOLUME ANALYSIS

South Street and White Street
AM Peak Hour

Description	White Street Northbound			White Street Southbound			South Street Eastbound			South Street Westbound		
	Left	Through	Right	Left	Through	Right	Left	Through	Right	Left	Through	Right
Existing Traffic (7/31/2013)	21	339	4	10	292	10	13	9	38	3	9	12
Season Adjustment Factor	1.11	1.11	1.11	1.11	1.11	1.11	1.11	1.11	1.11	1.11	1.11	1.11
2013 Peak Season Traffic	23	376	4	11	324	11	14	10	42	3	10	13
Annual Growth Rate	2.0%	2.0%	2.0%	2.0%	2.0%	2.0%	2.0%	2.0%	2.0%	2.0%	2.0%	2.0%
2016 Background Traffic	25	399	5	12	344	12	15	11	45	4	11	14
New Project Trips	2	15	0	0	2	0	0	0	0	0	0	0
2016 Total Traffic	**27**	**414**	**5**	**12**	**346**	**12**	**15**	**11**	**45**	**4**	**11**	**14**

FUTURE TURNING MOVEMENT VOLUME ANALYSIS

South Street and White Street
PM Peak Hour

	White Street Northbound			White Street Southbound			South Street Eastbound			South Street Westbound		
Description	Left	Through	Right	Left	Through	Right	Left	Through	Right	Left	Through	Right
Existing Traffic (7/31/2013)	19	285	5	22	513	9	14	17	63	2	2	8
Season Adjustment Factor	1.11	1.11	1.11	1.11	1.11	1.11	1.11	1.11	1.11	1.11	1.11	1.11
2013 Peak Season Traffic	21	316	6	24	569	10	16	19	70	2	2	9
Annual Growth Rate	2.0%	2.0%	2.0%	2.0%	2.0%	2.0%	2.0%	2.0%	2.0%	2.0%	2.0%	2.0%
2016 Background Traffic	22	336	6	26	604	11	16	20	74	2	2	9
New Project Trips	1	7	0	0	15	0	0	0	2	0	0	0
2016 Total Traffic	**23**	**343**	**6**	**26**	**619**	**11**	**16**	**20**	**76**	**2**	**2**	**9**

FUTURE TURNING MOVEMENT VOLUME ANALYSIS

Flagler Avenue and White Street
AM Peak Hour

Description	White Street Northbound			White Street Southbound			Flagler Avenue Eastbound			Flagler Avenue Westbound		
	Left	Through	Right	Left	Through	Right	Left	Through	Right	Left	Through	Right
Existing Traffic (6/18/2013)	9	120	11	205	144	2	4	62	10	13	136	195
Season Adjustment Factor	1.10	1.10	1.10	1.10	1.10	1.10	1.10	1.10	1.10	1.10	1.10	1.10
2013 Peak Season Traffic	10	132	12	226	158	2	4	68	11	14	150	215
Annual Growth Rate	2.0%	2.0%	2.0%	2.0%	2.0%	2.0%	2.0%	2.0%	2.0%	2.0%	2.0%	2.0%
2016 Background Traffic	11	140	13	239	168	2	5	72	12	15	159	228
New Project Trips	0	2	0	2	0	0	0	0	0	0	0	15
2016 Total Traffic	**11**	**142**	**13**	**241**	**168**	**2**	**5**	**72**	**12**	**15**	**159**	**243**

FUTURE TURNING MOVEMENT VOLUME ANALYSIS

Flagler Avenue and White Street
PM Peak Hour

	White Street Northbound			White Street Southbound			Flagler Avenue Eastbound			Flagler Avenue Westbound		
Description	Left	Through	Right	Left	Through	Right	Left	Through	Right	Left	Through	Right
Existing Traffic (6/18/2013)	6	97	5	311	305	10	10	187	57	12	131	180
Season Adjustment Factor	1.10	1.10	1.10	1.10	1.10	1.10	1.10	1.10	1.10	1.10	1.10	1.10
2013 Peak Season Traffic	7	107	6	342	336	11	11	206	63	13	144	198
Annual Growth Rate	2.0%	2.0%	2.0%	2.0%	2.0%	2.0%	2.0%	2.0%	2.0%	2.0%	2.0%	2.0%
2016 Background Traffic	7	113	6	363	356	12	12	218	67	14	153	210
New Project Trips	0	1	0	15	2	0	0	0	0	0	0	7
2016 Total Traffic	**7**	**114**	**6**	**378**	**358**	**12**	**12**	**218**	**67**	**14**	**153**	**217**

FUTURE TURNING MOVEMENT VOLUME ANALYSIS

Grinnell Street and United Street
AM Peak Hour

Description	Grinnell Street Northbound			Grinnell Street Southbound			United Street Eastbound			United Street Westbound		
	Left	Through	Right	Left	Through	Right	Left	Through	Right	Left	Through	Right
Existing Traffic (6/18/2013)	17	9	7	4	9	4	9	152	11	14	136	2
Season Adjustment Factor	1.10	1.10	1.10	1.10	1.10	1.10	1.10	1.10	1.10	1.10	1.10	1.10
2013 Peak Season Traffic	19	10	8	4	10	4	10	167	12	15	150	2
Annual Growth Rate	2.0%	2.0%	2.0%	2.0%	2.0%	2.0%	2.0%	2.0%	2.0%	2.0%	2.0%	2.0%
2016 Background Traffic	20	11	8	5	11	5	11	177	13	16	159	2
New Project Trips	0	0	11	0	0	0	0	18	0	2	3	0
2016 Total Traffic	**20**	**11**	**19**	**5**	**11**	**5**	**11**	**195**	**13**	**18**	**162**	**2**

FUTURE TURNING MOVEMENT VOLUME ANALYSIS

Grinnell Street and United Street
PM Peak Hour

	Grinnell Street Northbound			Grinnell Street Southbound			United Street Eastbound			United Street Westbound		
Description	Left	Through	Right	Left	Through	Right	Left	Through	Right	Left	Through	Right
Existing Traffic (6/18/2013)	10	17	4	2	12	4	11	300	26	19	125	2
Season Adjustment Factor	1.10	1.10	1.10	1.10	1.10	1.10	1.10	1.10	1.10	1.10	1.10	1.10
2013 Peak Season Traffic	11	19	4	2	13	4	12	330	29	21	138	2
Annual Growth Rate	2.0%	2.0%	2.0%	2.0%	2.0%	2.0%	2.0%	2.0%	2.0%	2.0%	2.0%	2.0%
2016 Background Traffic	12	20	5	2	14	5	13	350	30	22	146	2
New Project Trips	0	0	5	0	0	0	0	8	0	11	18	0
2016 Total Traffic	**12**	**20**	**10**	**2**	**14**	**5**	**13**	**358**	**30**	**33**	**164**	**2**

FUTURE TURNING MOVEMENT VOLUME ANALYSIS

Grinnell Street and Seminary Street
AM Peak Hour

	Grinnell Street Northbound			Grinnell Street Southbound			Seminary Street Eastbound			Seminary Street Westbound		
Description	Left	Through	Right	Left	Through	Right	Left	Through	Right	Left	Through	Right
Existing Traffic (3/12/2013)	0	18	1	10	21	1	0	10	0	1	6	19
Season Adjustment Factor	1.10	1.10	1.10	1.10	1.10	1.10	1.10	1.10	1.10	1.10	1.10	1.10
2013 Peak Season Traffic	0	20	1	11	23	1	0	11	0	1	7	21
Annual Growth Rate	2.0%	2.0%	2.0%	2.0%	2.0%	2.0%	2.0%	2.0%	2.0%	2.0%	2.0%	2.0%
2016 Background Traffic	0	21	1	12	25	1	0	12	0	1	7	22
New Project Trips	0	7	0	1	1	0	0	0	0	0	0	4
2016 Total Traffic	**0**	**28**	**1**	**13**	**26**	**1**	**0**	**12**	**0**	**1**	**7**	**26**

FUTURE TURNING MOVEMENT VOLUME ANALYSIS

Grinnell Street and Seminary Street
PM Peak Hour

	Grinnell Street Northbound			Grinnell Street Southbound			Seminary Street Eastbound			Seminary Street Westbound		
Description	Left	Through	Right	Left	Through	Right	Left	Through	Right	Left	Through	Right
Existing Traffic (6/18/2013)	0	18	2	21	31	0	5	4	0	1	8	17
Season Adjustment Factor	1.10	1.10	1.10	1.10	1.10	1.10	1.10	1.10	1.10	1.10	1.10	1.10
2013 Peak Season Traffic	0	20	2	23	34	0	6	4	0	1	9	19
Annual Growth Rate	2.0%	2.0%	2.0%	2.0%	2.0%	2.0%	2.0%	2.0%	2.0%	2.0%	2.0%	2.0%
2016 Background Traffic	0	21	2	25	36	0	6	5	0	1	9	20
New Project Trips	0	3	0	4	7	0	0	0	0	0	0	2
2016 Total Traffic	**0**	**24**	**2**	**29**	**43**	**0**	**6**	**5**	**0**	**1**	**9**	**22**

FUTURE LINK VOLUME ANALYSIS

Daily

Description	Truman Avenue E. of White St. Through	Truman Avenue W. of White St. Through	White Street S. of Catherine St. Through	White Street N. of Washington St. Through	United Street W. of White St. Through
Existing Traffic (6/18-19/2013) Season Adjustment Factor	4,363 1.10	10,328 1.10	11,328 1.10	10,737 1.10	6,117 1.10
2013 Peak Season Traffic	4,799	11,361	12,461	11,811	6,729
Annual Growth Rate Construction Adjustment	2.0% 1.5	2.0% 1.5	2.0%	2.0%	2.0%
2016 Background Traffic	7,640	18,084	13,224	12,534	7,141
New Project Trips	155	155	414	238	1036
2016 Total Traffic	**7,795**	**18,239**	**13,638**	**12,772**	**8,177**

Description	Seminary Street W. of Whalton St. Through	South Street W. of White St. Through	Grinnell Street S. of United St. Through	Flagler Avenue E. of White Street Through	
Existing Traffic (6/18-19/2013) Season Adjustment Factor	479 1.10	1,396 1.11	1,102 1.10	9,118 1.10	
2013 Peak Season Traffic	527	1,550	1,212	10,030	
Annual Growth Rate	2.0%	2.0%	2.0%	2.0%	
2016 Background Traffic	559	1,644	1,286	10,644	
New Project Trips	52	31	155	207	
2016 Total Traffic	**611**	**1,675**	**1,441**	**10,851**	

FUTURE LINK VOLUME ANALYSIS

AM Peak Hour

Description	Truman Avenue E. of White St. Through	Truman Avenue W. of White St. Through	White Street S. of Catherine St. Through	White Street N. of Washington St. Through	United Street W. of White St. Through
Existing Traffic (6/18-19/2013) Season Adjustment Factor	199 1.10	484 1.10	672 1.10	705 1.10	331 1.10
2013 Peak Season Traffic	219	532	739	776	364
Annual Growth Rate Construction Adjustment	2.0% 2.0	2.0% 2.0	2.0%	2.0%	2.0%
2016 Background Traffic	465	1,130	784	823	386
New Project Trips	12	12	32	19	82
2016 Total Traffic	**477**	**1,142**	**816**	**842**	**468**

Description	Seminary Street W. of Whalton St. Through	South Street W. of White St. Through	Grinnell Street S. of United St. Through	Flagler Avenue E. of White Street Through	
Existing Traffic (6/18-19/2013) Season Adjustment Factor	62 1.10	96 1.11	108 1.10	624 1.10	
2013 Peak Season Traffic	68	107	119	686	
Annual Growth Rate	2.0%	2.0%	2.0%	2.0%	
2016 Background Traffic	72	113	126	728	
New Project Trips	5	2	13	17	
2016 Total Traffic	**77**	**115**	**139**	**745**	

FUTURE LINK VOLUME ANALYSIS

PM Peak Hour

Description	Truman Avenue E. of White St. Through	Truman Avenue W. of White St. Through	White Street S. of Catherine St. Through	White Street N. of Washington St. Through	United Street W. of White St. Through
Existing Traffic (6/18-19/2013) Season Adjustment Factor	445 1.10	785 1.10	963 1.10	837 1.10	556 1.10
2013 Peak Season Traffic	490	864	1,059	921	612
Annual Growth Rate Construction Adjustment	2.0% 2.0	2.0% 2.0	2.0%	2.0%	2.0%
2016 Background Traffic	1,039	1,833	1,124	977	649
New Project Trips	16	16	42	25	106
2016 Total Traffic	**1,055**	**1,849**	**1,166**	**1,002**	**755**

Description	Seminary Street W. of Whalton St. Through	South Street W. of White St. Through	Grinnell Street S. of United St. Through	Flagler Avenue E. of White Street Through	
Existing Traffic (6/18-19/2013) Season Adjustment Factor	69 1.10	133 1.11	122 1.10	780 1.10	
2013 Peak Season Traffic	76	148	134	858	
Annual Growth Rate	2.0%	2.0%	2.0%	2.0%	
2016 Background Traffic	81	157	142	911	
New Project Trips	6	3	16	22	
2016 Total Traffic	**87**	**160**	**158**	**933**	

APPENDIX H

Signal Timing Data

TRANSYT 1880 EL CONTROLLER SETTINGS

BASIC FUNCTIONS

		RING 1				RING 2			
	PH. NO:	1	2	3	4	5	6	7	8
T	INTERVAL								
).	TYPE								
	INITIAL	60	35						
2	PASSAGE								
3	YELLOW CLEAR	4	4						
4	RED CLEAR	1	1						
5	MAX GREEN 1								
6	MAX GREEN 2								
7	WALK								
8	PED CLEAR								
9	MIN RECALL	X	X						
0	MAX RECALL								
1	PED RECALL								
2	DET NON-LOCK								
3	CNA 1								
4	CNA 2								
5	FLASHING WALK								
6	PHASE OMIT								
7	PED OMIT								
8	SOFT RECALL								

SPECIAL FUNCTIONS (PH. 0)

23	PHASE REVERSAL		
24	DET SWITCHING		
25	FOUR SECTION LOGIC		
27	ENABLE SP PROG (P/E)		
28	DENSITY ACTIVE		
29	PH. AFTER FLASH		
30	START PHASE		
31	PH. BEFORE FLASH		
32	PH. BEF. EX. PED		
33	EX. PED		
91	DEFEAT RED REVERT		
92	CNA PICKUP TIME		
93	ALL RED START TIME		
94	DEF LAST VEH PASS		
95	SIMULT GAP		
96	SEQU INIT & PASS		
97	UCF OVERRIDE COORD		
98	DEF SINGLE ENT IN DUAL RING		

BASIC PRE EMPT FUNCTIONS (PH 9)

01	MIN GREEN	
02	TR CLEAR GR 1	
03	TR CLEAR GR 2	
04	MIN DWELL	
05	TR CLEAR YEL 1	
06	TR CLEAR ALL RED 1	
07	TR CLEAR YEL 2	
08	TR CLEAR ALL RED 2	
09	YEL CLEAR AFT P-E	
10	RED CLEAR AFT P-E	
27	SPECIAL O/L CLEAR	
28	SPECIAL PED CLEAR	
41	WALK	
42	PED CLEAR	
43	PED ALL RED CL	
51	DEL BEFORE P-E	
56	# OF CYC TO HOLD REC	
57	# OF CYC TO HLD MAX GR	

NOTES:

1. T.C.C. MAY OVERRIDE MAX., OFFSET, O
   CYCLE LENGTH.
2. CONTROLLER IS TRUE MAX. & TRUE MI
3. PHASE 0, INTERVAL 96=0 MEANS TRUE
4. BLANKS, "X" OR "....." MEAN ZERO OR N
5. KEYBOARD MUST BE LEFT "OFF".

l. By Kc, LT	Date 8-7-12
acked	Date
Serv.	Date
ning:	Ph.No.
set No.	

Timing changed on ø1 from 35 sec to 60 sec. Requested by Doug Bradshaw at the City of Key West. 8-7-12

Intersection Of:

FLAGLER & WHITE

SSRM SETTINGS

CYCLE LENGTH:		%
RELEASE	(S1)	%
AVG. OFFSET	(R1)	%
AM OFFSET	(R2)	%

TRANSYT ~~16805~~ CONTROLLER SETTINGS

1880 EL

BASIC FUNCTIONS

INT NO.	INTERVAL TYPE	RING 1 PH: NO: 1	2	3	4	RING 2 5	6	7	8
01	INITIAL		60		35				
02	PASSAGE								
03	YELLOW CLEAR		4		4				
04	RED CLEAR		1		1				
05	MAX GREEN 1								
06	MAX GREEN 2								
07	WALK		30		20				
08	PED CLEAR		10		7				
09	MIN RECALL		X		X				
10	MAX RECALL								
11	PED RECALL		X		X				
12	DET NON-LOCK								
13	CNA 1								
14	CNA 2								
15	FLASHING WALK								
16	PHASE OMIT	X		X		X	X	X	X
17	PED OMIT	X		X		X	X	X	X
18	SOFT RECALL								

SPECIAL FUNCTIONS (PH. 0)

23	PHASE REVERSAL		-
24	DET SWITCHING		-
25	FOUR SECTION LOGIC		-
27	ENABLE SP PROG (P/E)		-
28	DENSITY ACTIVE		-
29	PH. AFTER FLASH		-
30	START PHASE		-
31	PH. BEFORE FLASH		-
32	PH. BEF. EX. PED		-
33	EX. PED		-
91	DEFEAT RED REVERT		
92	CNA PICKUP TIME		
93	ALL RED START TIME		
94	DEF LAST VEH PASS		
95	SIMULT GAP		
96	SEQU INIT & PASS		
97	UCF OVERRIDE COORD		
98	DEF SINGLE ENT IN DUAL RING		

BASIC PRE EMPT FUNCTIONS (PH 9)

01	MIN GREEN	
02	TR CLEAR GR 1	
03	TR CLEAR GR 2	
04	MIN DWELL	
05	TR CLEAR YEL 1	
06	TR CLEAR ALL RED 1	
07	TR CLEAR YEL 2	
08	TR CLEAR ALL RED 2	
09	YEL CLEAR AFT P-E	
10	RED CLEAR AFT P-E	
27	SPECIAL O/L CLEAR	
28	SPECIAL PED CLEAR	
41	WALK	
42	PED CLEAR	
43	PED ALL RED CL	
51	DEL BEFORE P-E	
56	# OF CYC TO HOLD REC	
57	# OF CYC TO HLD MAX GR	

NOTES:

1. T.C.C. MAY OVERRIDE MAX., OFFSET, OR CYCLE LENGTH.
2. CONTROLLER IS TRUE MAX. & TRUE MIN.
3. PHASE 0, INTERVAL 96=0 MEANS TRUE N
4. BLANKS, "X" OR "-----" MEAN ZERO OR N/A
5. KEYBOARD MUST BE LEFT "OFF".

Init. By PM, KC Date 9-12-00	
Checked Date	
In Serv. Date	Intersection Of:
Timing: Ph.No.	TRUMAN & WHITE
Asset No.	

SSRM SETTINGS

CYCLE LENGTH:		%
RELEASE	(S1)	%
AVG. OFFSET	(R1)	%
AM OFFSET	(R2)	%
PM OFFSET	(R3)	%

TRANSYT 1980 EL-CONTROLLER SETTINGS

ASIC FUNCTIONS

		RING 1				RING 2			
	PH: NO:	1	2	3	4	5	6	7	8
T	INTERVAL								
).	TYPE								
1	INITIAL	25	70						
2	PASSAGE								
3	YELLOW CLEAR	4.0	4.0						
4	RED CLEAR	1	1						
5	MAX GREEN 1								
6	MAX GREEN 2								
7	WALK								
8	PED CLEAR								
9	MIN RECALL	X	X						
0	MAX RECALL								
1	PED RECALL								
2	DET NON-LOCK								
3	CNA 1								
4	CNA 2								
5	FLASHING WALK								
6	PHASE OMIT								
7	PED OMIT								
8	SOFT RECALL								

SPECIAL FUNCTIONS (PH. 0)

23	PHASE REVERSAL		
24	DET SWITCHING		
25	FOUR SECTION LOGIC		
27	ENABLE SP PROG (P/E)		
28	DENSITY ACTIVE		
29	PH. AFTER FLASH		
30	START PHASE		
31	PH. BEFORE FLASH		
32	PH. BEF. EX. PED		
33	EX. PED		
91	DEFEAT RED REVERT		
92	CNA PICKUP TIME		
93	ALL RED START TIME		
94	DEF LAST VEH PASS		
95	SIMULT GAP		
96	SEQU INIT & PASS		
97	UCF OVERRIDE COORD		
98	DEF SINGLE ENT IN DUAL RING		

BASIC PRE EMPT FUNCTIONS (PH 9)

01	MIN GREEN	
02	TR CLEAR GR 1	
03	TR CLEAR GR 2	
04	MIN DWELL	
05	TR CLEAR YEL 1	
06	TR CLEAR ALL RED 1	
07	TR CLEAR YEL 2	
08	TR CLEAR ALL RED 2	
09	YEL CLEAR AFT P-E	
10	RED CLEAR AFT P-E	
27	SPECIAL O/L CLEAR	
28	SPECIAL PED CLEAR	
41	WALK	
42	PED CLEAR	
43	PED ALL RED CL	
51	DEL BEFORE P-E	
56	# OF CYC TO HOLD REC	
57	# OF CYC TO HLD MAX GR	

NOTES:

1. T.C.C. MAY OVERRIDE MAX., OFFSET, O
   CYCLE LENGTH.
2. CONTROLLER IS TRUE MAX. & TRUE MI
3. PHASE 0, INTERVAL 96=0 MEANS TRUE
4. BLANKS, "X" OR "....." MEAN ZERO OR N
5. KEYBOARD MUST BE LEFT "OFF".

I. By Kc, LT	Date 8-7-12
ecked	Date
Serv.	Date
ning:	Ph.No.

Timing changed on ø2 from 30 sec. to 70 sec. Requested by Doug Bradshaw at the City of Key West. 8-7-12

Intersection Of:

WHITE & UNITED

SSRM SETTINGS

CYCLE LENGTH:		%
RELEASE	(S1)	%
AVG. OFFSET	(R1)	%
AM OFFSET	(R2)	%

APPENDIX I

SYNCHRO Output

Existing Conditions

Lane Group	EBL	EBT	EBR	WBL	WBT	WBR	NBL	NBT	NBR	SBL	SBT	SBR
Lane Configurations												
Volume (vph)	17	106	76	8	11	3	152	229	53	24	163	17
Ideal Flow (vphpl)	1900	1900	1900	1900	1900	1900	1900	1900	1900	1900	1900	1900
Lane Util. Factor	1.00	1.00	1.00	1.00	1.00	1.00	1.00	1.00	1.00	1.00	1.00	1.00
Frt			0.850		0.984			0.972			0.986	
Flt Protected		0.993			0.982		0.950			0.950		
Satd. Flow (prot)	0	1868	1599	0	1818	0	1787	1829	0	1787	1855	0
Flt Permitted		0.953			0.869		0.626			0.562		
Satd. Flow (perm)	0	1793	1599	0	1609	0	1178	1829	0	1057	1855	0
Right Turn on Red			Yes			Yes			Yes			Yes
Satd. Flow (RTOR)			88		3			12			5	
Link Speed (mph)		30			30			30			30	
Link Distance (ft)		194			196			234			193	
Travel Time (s)		4.4			4.5			5.3			4.4	
Peak Hour Factor	0.86	0.86	0.86	0.86	0.86	0.86	0.86	0.86	0.86	0.86	0.86	0.86
Heavy Vehicles (%)	1%	1%	1%	1%	1%	1%	1%	1%	1%	1%	1%	1%
Adj. Flow (vph)	20	123	88	9	13	3	177	266	62	28	190	20
Shared Lane Traffic (%)												
Lane Group Flow (vph)	0	143	88	0	25	0	177	328	0	28	210	0
Enter Blocked Intersection	No	No	No	No	No	No	No	No	No	No	No	No
Lane Alignment	Left	Left	Right	Left	Left	Right	Left	Left	Right	Left	Left	Right
Median Width(ft)		0			0			12			12	
Link Offset(ft)		0			0			0			0	
Crosswalk Width(ft)		16			16			16			16	
Two way Left Turn Lane												
Headway Factor	1.00	1.00	1.00	1.00	1.00	1.00	1.00	1.00	1.00	1.00	1.00	1.00
Turning Speed (mph)	15		9	15		9	15		9	15		9
Number of Detectors	1	2	1	1	2		1	2		1	2	
Detector Template	Left	Thru	Right	Left	Thru		Left	Thru		Left	Thru	
Leading Detector (ft)	20	100	20	20	100		20	100		20	100	
Trailing Detector (ft)	0	0	0	0	0		0	0		0	0	
Detector 1 Position(ft)	0	0	0	0	0		0	0		0	0	
Detector 1 Size(ft)	20	6	20	20	6		20	6		20	6	
Detector 1 Type	Cl+Ex	Cl+Ex	Cl+Ex	Cl+Ex	Cl+Ex		Cl+Ex	Cl+Ex		Cl+Ex	Cl+Ex	
Detector 1 Channel												
Detector 1 Extend (s)	0.0	0.0	0.0	0.0	0.0		0.0	0.0		0.0	0.0	
Detector 1 Queue (s)	0.0	0.0	0.0	0.0	0.0		0.0	0.0		0.0	0.0	
Detector 1 Delay (s)	0.0	0.0	0.0	0.0	0.0		0.0	0.0		0.0	0.0	
Detector 2 Position(ft)		94			94			94			94	
Detector 2 Size(ft)		6			6			6			6	
Detector 2 Type		Cl+Ex			Cl+Ex			Cl+Ex			Cl+Ex	
Detector 2 Channel												
Detector 2 Extend (s)		0.0			0.0			0.0			0.0	
Turn Type	Perm	NA	Perm	Perm	NA		Perm	NA		Perm	NA	
Protected Phases		4			8			2			6	
Permitted Phases	4		4	8			2			6		
Detector Phase	4	4	4	8	8		2	2		6	6	
Switch Phase												
Minimum Initial (s)	4.0	4.0	4.0	4.0	4.0		4.0	4.0		4.0	4.0	

Lane Group	EBL	EBT	EBR	WBL	WBT	WBR	NBL	NBT	NBR	SBL	SBT	SBR
Minimum Split (s)	21.0	21.0	21.0	21.0	21.0		21.0	21.0		21.0	21.0	
Total Split (s)	65.0	65.0	65.0	65.0	65.0		40.0	40.0		40.0	40.0	
Total Split (%)	61.9%	61.9%	61.9%	61.9%	61.9%		38.1%	38.1%		38.1%	38.1%	
Maximum Green (s)	60.0	60.0	60.0	60.0	60.0		35.0	35.0		35.0	35.0	
Yellow Time (s)	4.0	4.0	4.0	4.0	4.0		4.0	4.0		4.0	4.0	
All-Red Time (s)	1.0	1.0	1.0	1.0	1.0		1.0	1.0		1.0	1.0	
Lost Time Adjust (s)		0.0	0.0		0.0		0.0	0.0		0.0	0.0	
Total Lost Time (s)		5.0	5.0		5.0		5.0	5.0		5.0	5.0	
Lead/Lag												
Lead-Lag Optimize?												
Vehicle Extension (s)	3.0	3.0	3.0	3.0	3.0		3.0	3.0		3.0	3.0	
Recall Mode	None	None	None	None	None		Max	Max		Max	Max	
Walk Time (s)	5.0	5.0	5.0	5.0	5.0		5.0	5.0		5.0	5.0	
Flash Dont Walk (s)	11.0	11.0	11.0	11.0	11.0		11.0	11.0		11.0	11.0	
Pedestrian Calls (#/hr)	0	0	0	0	0		0	0		0	0	
Act Effct Green (s)		9.8	9.8		9.8		38.3	38.3		38.3	38.3	
Actuated g/C Ratio		0.17	0.17		0.17		0.66	0.66		0.66	0.66	
v/c Ratio		0.48	0.26		0.09		0.23	0.27		0.04	0.17	
Control Delay		26.1	7.5		17.8		5.4	5.1		4.4	4.6	
Queue Delay		0.0	0.0		0.0		0.0	0.0		0.0	0.0	
Total Delay		26.1	7.5		17.8		5.4	5.1		4.4	4.6	
LOS		C	A		B		A	A		A	A	
Approach Delay		19.0			17.8			5.2			4.5	
Approach LOS		B			B			A			A	

Intersection Summary

Area Type: Other
Cycle Length: 105
Actuated Cycle Length: 58.2
Natural Cycle: 45
Control Type: Actuated-Uncoordinated
Maximum v/c Ratio: 0.48
Intersection Signal Delay: 8.5 Intersection LOS: A
Intersection Capacity Utilization 39.0% ICU Level of Service A
Analysis Period (min) 15

Splits and Phases: 3: White St & Truman Ave

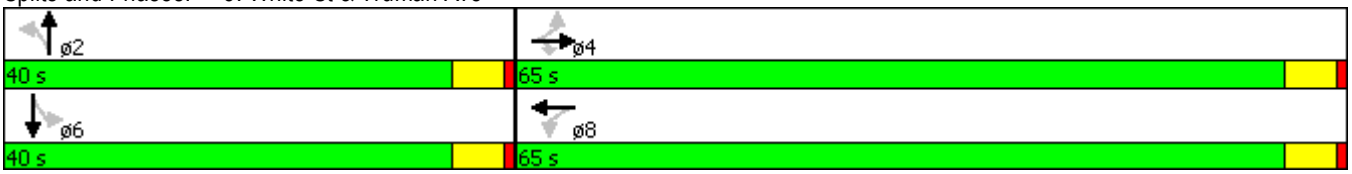

Lane Group	EBL	EBT	EBR	WBL	WBT	WBR	NBL	NBT	NBR	SBL	SBT	SBR
Lane Configurations												
Volume (vph)	16	43	91	6	42	16	72	273	7	18	275	24
Ideal Flow (vphpl)	1900	1900	1900	1900	1900	1900	1900	1900	1900	1900	1900	1900
Lane Util. Factor	1.00	1.00	1.00	1.00	1.00	1.00	1.00	1.00	1.00	1.00	1.00	1.00
Frt		0.918			0.966			0.997			0.990	
Flt Protected		0.995			0.995			0.990			0.997	
Satd. Flow (prot)	0	1735	0	0	1826	0	0	1861	0	0	1859	0
Flt Permitted		0.963			0.930			0.865			0.971	
Satd. Flow (perm)	0	1680	0	0	1707	0	0	1626	0	0	1811	0
Right Turn on Red			Yes			Yes			Yes			Yes
Satd. Flow (RTOR)		69			15			2			8	
Link Speed (mph)		30			30			30			30	
Link Distance (ft)		223			217			206			174	
Travel Time (s)		5.1			4.9			4.7			4.0	
Peak Hour Factor	0.91	0.91	0.91	0.91	0.91	0.91	0.91	0.91	0.91	0.91	0.91	0.91
Heavy Vehicles (%)	0%	0%	0%	0%	0%	0%	0%	1%	0%	0%	1%	0%
Adj. Flow (vph)	18	47	100	7	46	18	79	300	8	20	302	26
Shared Lane Traffic (%)												
Lane Group Flow (vph)	0	165	0	0	71	0	0	387	0	0	348	0
Enter Blocked Intersection	No	No	No	No	No	No	No	No	No	No	No	No
Lane Alignment	Left	Left	Right	Left	Left	Right	Left	Left	Right	Left	Left	Right
Median Width(ft)		0			0			0			0	
Link Offset(ft)		0			0			0			0	
Crosswalk Width(ft)		16			16			16			16	
Two way Left Turn Lane												
Headway Factor	1.00	1.00	1.00	1.00	1.00	1.00	1.00	1.00	1.00	1.00	1.00	1.00
Turning Speed (mph)	15		9	15		9	15		9	15		9
Number of Detectors	1	2		1	2		1	2		1	2	
Detector Template	Left	Thru		Left	Thru		Left	Thru		Left	Thru	
Leading Detector (ft)	20	100		20	100		20	100		20	100	
Trailing Detector (ft)	0	0		0	0		0	0		0	0	
Detector 1 Position(ft)	0	0		0	0		0	0		0	0	
Detector 1 Size(ft)	20	6		20	6		20	6		20	6	
Detector 1 Type	Cl+Ex	Cl+Ex		Cl+Ex	Cl+Ex		Cl+Ex	Cl+Ex		Cl+Ex	Cl+Ex	
Detector 1 Channel												
Detector 1 Extend (s)	0.0	0.0		0.0	0.0		0.0	0.0		0.0	0.0	
Detector 1 Queue (s)	0.0	0.0		0.0	0.0		0.0	0.0		0.0	0.0	
Detector 1 Delay (s)	0.0	0.0		0.0	0.0		0.0	0.0		0.0	0.0	
Detector 2 Position(ft)		94			94			94			94	
Detector 2 Size(ft)		6			6			6			6	
Detector 2 Type		Cl+Ex			Cl+Ex			Cl+Ex			Cl+Ex	
Detector 2 Channel												
Detector 2 Extend (s)		0.0			0.0			0.0			0.0	
Turn Type	Perm	NA		Perm	NA		Perm	NA		Perm	NA	
Protected Phases		4			8			2			6	
Permitted Phases	4			8			2			6		
Detector Phase	4	4		8	8		2	2		6	6	
Switch Phase												
Minimum Initial (s)	4.0	4.0		4.0	4.0		4.0	4.0		4.0	4.0	

Lane Group	EBL	EBT	EBR	WBL	WBT	WBR	NBL	NBT	NBR	SBL	SBT	SBR
Minimum Split (s)	21.0	21.0		21.0	21.0		21.0	21.0		21.0	21.0	
Total Split (s)	30.0	30.0		30.0	30.0		75.0	75.0		75.0	75.0	
Total Split (%)	28.6%	28.6%		28.6%	28.6%		71.4%	71.4%		71.4%	71.4%	
Maximum Green (s)	25.0	25.0		25.0	25.0		70.0	70.0		70.0	70.0	
Yellow Time (s)	4.0	4.0		4.0	4.0		4.0	4.0		4.0	4.0	
All-Red Time (s)	1.0	1.0		1.0	1.0		1.0	1.0		1.0	1.0	
Lost Time Adjust (s)		0.0			0.0			0.0			0.0	
Total Lost Time (s)		5.0			5.0			5.0			5.0	
Lead/Lag												
Lead-Lag Optimize?												
Vehicle Extension (s)	3.0	3.0		3.0	3.0		3.0	3.0		3.0	3.0	
Recall Mode	None	None		None	None		Max	Max		Max	Max	
Walk Time (s)	5.0	5.0		5.0	5.0		5.0	5.0		5.0	5.0	
Flash Dont Walk (s)	11.0	11.0		11.0	11.0		11.0	11.0		11.0	11.0	
Pedestrian Calls (#/hr)	0	0		0	0		0	0		0	0	
Act Effct Green (s)		10.9			10.9			73.4			73.4	
Actuated g/C Ratio		0.12			0.12			0.78			0.78	
v/c Ratio		0.65			0.34			0.31			0.25	
Control Delay		34.2			33.8			4.2			3.7	
Queue Delay		0.0			0.0			0.0			0.0	
Total Delay		34.2			33.8			4.2			3.7	
LOS		C			C			A			A	
Approach Delay		34.2			33.8			4.2			3.7	
Approach LOS		C			C			A			A	

Intersection Summary

Area Type: Other
Cycle Length: 105
Actuated Cycle Length: 94.3
Natural Cycle: 45
Control Type: Actuated-Uncoordinated
Maximum v/c Ratio: 0.65
Intersection Signal Delay: 11.3 Intersection LOS: B
Intersection Capacity Utilization 60.1% ICU Level of Service B
Analysis Period (min) 15

Splits and Phases: 8: White St & United St

Lanes, Volumes, Timings
23: White St & Flagler Ave

10/30/2013

Lane Group	EBL	EBT	EBR	WBL	WBT	WBR	NBL	NBT	NBR	SBL	SBT	SBR
Lane Configurations												
Volume (vph)	4	62	10	13	136	195	9	120	11	205	144	2
Ideal Flow (vphpl)	1900	1900	1900	1900	1900	1900	1900	1900	1900	1900	1900	1900
Lane Util. Factor	1.00	1.00	1.00	1.00	1.00	1.00	1.00	1.00	1.00	1.00	1.00	1.00
Frt			0.850			0.850		0.990			0.999	
Flt Protected		0.997			0.996			0.997			0.972	
Satd. Flow (prot)	0	1894	1615	0	1892	1599	0	1858	0	0	1827	0
Flt Permitted		0.977			0.969			0.973			0.726	
Satd. Flow (perm)	0	1856	1615	0	1841	1599	0	1813	0	0	1364	0
Right Turn on Red			Yes			Yes			Yes			Yes
Satd. Flow (RTOR)			21			235		7				
Link Speed (mph)		30			30			30			30	
Link Distance (ft)		214			197			162			162	
Travel Time (s)		4.9			4.5			3.7			3.7	
Peak Hour Factor	0.83	0.83	0.83	0.83	0.83	0.83	0.83	0.83	0.83	0.83	0.83	0.83
Heavy Vehicles (%)	0%	0%	0%	0%	0%	1%	0%	1%	1%	1%	1%	0%
Adj. Flow (vph)	5	75	12	16	164	235	11	145	13	247	173	2
Shared Lane Traffic (%)												
Lane Group Flow (vph)	0	80	12	0	180	235	0	169	0	0	422	0
Enter Blocked Intersection	No	No	No	No	No	No	No	No	No	No	No	No
Lane Alignment	Left	Left	Right	Left	Left	Right	Left	Left	Right	Left	Left	Right
Median Width(ft)		0			0			0			0	
Link Offset(ft)		0			0			0			0	
Crosswalk Width(ft)		16			16			16			16	
Two way Left Turn Lane												
Headway Factor	1.00	1.00	1.00	1.00	1.00	1.00	1.00	1.00	1.00	1.00	1.00	1.00
Turning Speed (mph)	15		9	15		9	15		9	15		9
Number of Detectors	1	2	1	1	2	1	1	2		1	2	
Detector Template	Left	Thru	Right	Left	Thru	Right	Left	Thru		Left	Thru	
Leading Detector (ft)	20	100	20	20	100	20	20	100		20	100	
Trailing Detector (ft)	0	0	0	0	0	0	0	0		0	0	
Detector 1 Position(ft)	0	0	0	0	0	0	0	0		0	0	
Detector 1 Size(ft)	20	6	20	20	6	20	20	6		20	6	
Detector 1 Type	Cl+Ex	Cl+Ex	Cl+Ex	Cl+Ex	Cl+Ex	Cl+Ex	Cl+Ex	Cl+Ex		Cl+Ex	Cl+Ex	
Detector 1 Channel												
Detector 1 Extend (s)	0.0	0.0	0.0	0.0	0.0	0.0	0.0	0.0		0.0	0.0	
Detector 1 Queue (s)	0.0	0.0	0.0	0.0	0.0	0.0	0.0	0.0		0.0	0.0	
Detector 1 Delay (s)	0.0	0.0	0.0	0.0	0.0	0.0	0.0	0.0		0.0	0.0	
Detector 2 Position(ft)		94			94			94			94	
Detector 2 Size(ft)		6			6			6			6	
Detector 2 Type		Cl+Ex			Cl+Ex			Cl+Ex			Cl+Ex	
Detector 2 Channel												
Detector 2 Extend (s)		0.0			0.0			0.0			0.0	
Turn Type	Perm	NA	Perm	Perm	NA	Perm	Perm	NA		Perm	NA	
Protected Phases		4			8			2			6	
Permitted Phases	4		4	8		8	2			6		
Detector Phase	4	4	4	8	8	8	2	2		6	6	
Switch Phase												
Minimum Initial (s)	4.0	4.0	4.0	4.0	4.0	4.0	4.0	4.0		4.0	4.0	

Lane Group	EBL	EBT	EBR	WBL	WBT	WBR	NBL	NBT	NBR	SBL	SBT	SBR
Minimum Split (s)	21.0	21.0	21.0	21.0	21.0	21.0	21.0	21.0		21.0	21.0	
Total Split (s)	40.0	40.0	40.0	40.0	40.0	40.0	65.0	65.0		65.0	65.0	
Total Split (%)	38.1%	38.1%	38.1%	38.1%	38.1%	38.1%	61.9%	61.9%		61.9%	61.9%	
Maximum Green (s)	35.0	35.0	35.0	35.0	35.0	35.0	60.0	60.0		60.0	60.0	
Yellow Time (s)	4.0	4.0	4.0	4.0	4.0	4.0	4.0	4.0		4.0	4.0	
All-Red Time (s)	1.0	1.0	1.0	1.0	1.0	1.0	1.0	1.0		1.0	1.0	
Lost Time Adjust (s)		0.0	0.0		0.0	0.0		0.0			0.0	
Total Lost Time (s)		5.0	5.0		5.0	5.0		5.0			5.0	
Lead/Lag												
Lead-Lag Optimize?												
Vehicle Extension (s)	3.0	3.0	3.0	3.0	3.0	3.0	3.0	3.0		3.0	3.0	
Recall Mode	None	None	None	None	None	None	Max	Max		Max	Max	
Walk Time (s)	5.0	5.0	5.0	5.0	5.0	5.0	5.0	5.0		5.0	5.0	
Flash Dont Walk (s)	11.0	11.0	11.0	11.0	11.0	11.0	11.0	11.0		11.0	11.0	
Pedestrian Calls (#/hr)	0	0	0	0	0	0	0	0		0	0	
Act Effct Green (s)		13.7	13.7		13.7	13.7		60.2			60.2	
Actuated g/C Ratio		0.16	0.16		0.16	0.16		0.72			0.72	
v/c Ratio		0.27	0.04		0.60	0.52		0.13			0.43	
Control Delay		32.4	8.3		41.1	8.7		4.4			7.1	
Queue Delay		0.0	0.0		0.0	0.0		0.0			0.0	
Total Delay		32.4	8.3		41.1	8.7		4.4			7.1	
LOS		C	A		D	A		A			A	
Approach Delay		29.3			22.8			4.4			7.1	
Approach LOS		C			C			A			A	

Intersection Summary

Area Type: Other
Cycle Length: 105
Actuated Cycle Length: 83.9
Natural Cycle: 50
Control Type: Actuated-Uncoordinated
Maximum v/c Ratio: 0.60
Intersection Signal Delay: 14.5 Intersection LOS: B
Intersection Capacity Utilization 53.6% ICU Level of Service A
Analysis Period (min) 15

Splits and Phases: 23: White St & Flagler Ave

HCM Unsignalized Intersection Capacity Analysis
13: White St & Seminary St

10/30/2013

Movement	EBL	EBT	EBR	WBL	WBT	WBR	NBL	NBT	NBR	SBL	SBT	SBR
Lane Configurations												
Volume (veh/h)	2	1	5	3	9	27	28	319	3	11	338	13
Sign Control		Stop			Stop			Free			Free	
Grade		0%			0%			0%			0%	
Peak Hour Factor	0.91	0.91	0.91	0.91	0.91	0.91	0.91	0.91	0.91	0.91	0.91	0.91
Hourly flow rate (vph)	2	1	5	3	10	30	31	351	3	12	371	14
Pedestrians												
Lane Width (ft)												
Walking Speed (ft/s)												
Percent Blockage												
Right turn flare (veh)												
Median type								None			None	
Median storage veh)												
Upstream signal (ft)												
pX, platoon unblocked												
vC, conflicting volume	851	818	379	823	824	352	386			354		
vC1, stage 1 conf vol												
vC2, stage 2 conf vol												
vCu, unblocked vol	851	818	379	823	824	352	386			354		
tC, single (s)	7.1	6.5	6.2	7.1	6.5	6.2	4.1			4.1		
tC, 2 stage (s)												
tF (s)	3.5	4.0	3.3	3.5	4.0	3.3	2.2			2.2		
p0 queue free %	99	100	99	99	97	96	97			99		
cM capacity (veh/h)	256	302	673	284	299	696	1184			1216		

Direction, Lane #	EB 1	WB 1	NB 1	SB 1
Volume Total	9	43	385	398
Volume Left	2	3	31	12
Volume Right	5	30	3	14
cSH	431	491	1184	1216
Volume to Capacity	0.02	0.09	0.03	0.01
Queue Length 95th (ft)	2	7	2	1
Control Delay (s)	13.5	13.0	0.9	0.3
Lane LOS	B	B	A	A
Approach Delay (s)	13.5	13.0	0.9	0.3
Approach LOS	B	B		

Intersection Summary			
Average Delay	1.4		
Intersection Capacity Utilization	39.6%	ICU Level of Service	A
Analysis Period (min)	15		

HCM Unsignalized Intersection Capacity Analysis
18: White St & South St

10/30/2013

Movement	EBL	EBT	EBR	WBL	WBT	WBR	NBL	NBT	NBR	SBL	SBT	SBR
Lane Configurations												
Volume (veh/h)	13	9	38	3	9	12	21	339	4	10	292	10
Sign Control		Stop			Stop			Free			Free	
Grade		0%			0%			0%			0%	
Peak Hour Factor	0.90	0.90	0.90	0.90	0.90	0.90	0.90	0.90	0.90	0.90	0.90	0.90
Hourly flow rate (vph)	14	10	42	3	10	13	23	377	4	11	324	11
Pedestrians												
Lane Width (ft)												
Walking Speed (ft/s)												
Percent Blockage												
Right turn flare (veh)												
Median type								None			None	
Median storage veh)												
Upstream signal (ft)												
pX, platoon unblocked												
vC, conflicting volume	796	780	330	825	783	379	336			381		
vC1, stage 1 conf vol												
vC2, stage 2 conf vol												
vCu, unblocked vol	796	780	330	825	783	379	336			381		
tC, single (s)	7.1	6.5	6.2	7.1	6.5	6.2	4.1			4.1		
tC, 2 stage (s)												
tF (s)	3.5	4.0	3.3	3.5	4.0	3.3	2.2			2.2		
p0 queue free %	95	97	94	99	97	98	98			99		
cM capacity (veh/h)	288	320	716	264	318	672	1235			1188		

Direction, Lane #	EB 1	WB 1	NB 1	SB 1
Volume Total	67	27	404	347
Volume Left	14	3	23	11
Volume Right	42	13	4	11
cSH	475	418	1235	1188
Volume to Capacity	0.14	0.06	0.02	0.01
Queue Length 95th (ft)	12	5	1	1
Control Delay (s)	13.8	14.2	0.6	0.3
Lane LOS	B	B	A	A
Approach Delay (s)	13.8	14.2	0.6	0.3
Approach LOS	B	B		

Intersection Summary			
Average Delay	2.0		
Intersection Capacity Utilization	39.6%	ICU Level of Service	A
Analysis Period (min)	15		

HCM Unsignalized Intersection Capacity Analysis
28: Grinnell St & United St

10/30/2013

Movement	EBL	EBT	EBR	WBL	WBT	WBR	NBL	NBT	NBR	SBL	SBT	SBR
Lane Configurations												
Volume (veh/h)	9	152	11	14	136	2	17	9	7	4	9	4
Sign Control		Free			Free			Stop			Stop	
Grade		0%			0%			0%			0%	
Peak Hour Factor	0.83	0.83	0.83	0.83	0.83	0.83	0.83	0.83	0.83	0.83	0.83	0.83
Hourly flow rate (vph)	11	183	13	17	164	2	20	11	8	5	11	5
Pedestrians												
Lane Width (ft)												
Walking Speed (ft/s)												
Percent Blockage												
Right turn flare (veh)												
Median type		None			None							
Median storage veh)												
Upstream signal (ft)												
pX, platoon unblocked												
vC, conflicting volume	166			196			420	411	190	424	417	165
vC1, stage 1 conf vol												
vC2, stage 2 conf vol												
vCu, unblocked vol	166			196			420	411	190	424	417	165
tC, single (s)	4.1			4.1			7.1	6.5	6.2	7.1	6.5	6.2
tC, 2 stage (s)												
tF (s)	2.2			2.2			3.5	4.0	3.3	3.5	4.0	3.3
p0 queue free %	99			99			96	98	99	99	98	99
cM capacity (veh/h)	1424			1388			527	523	857	522	519	885

Direction, Lane #	EB 1	WB 1	NB 1	SB 1
Volume Total	207	183	40	20
Volume Left	11	17	20	5
Volume Right	13	2	8	5
cSH	1424	1388	573	576
Volume to Capacity	0.01	0.01	0.07	0.04
Queue Length 95th (ft)	1	1	6	3
Control Delay (s)	0.5	0.8	11.8	11.5
Lane LOS	A	A	B	B
Approach Delay (s)	0.5	0.8	11.8	11.5
Approach LOS			B	B

Intersection Summary			
Average Delay	2.1		
Intersection Capacity Utilization	22.4%	ICU Level of Service	A
Analysis Period (min)	15		

HCM Unsignalized Intersection Capacity Analysis
33: Grinnell St & Seminary St

10/30/2013

Movement	EBL	EBT	EBR	WBL	WBT	WBR	NBL	NBT	NBR	SBL	SBT	SBR
Lane Configurations												
Sign Control		Stop			Stop			Stop			Stop	
Volume (vph)	0	10	0	1	6	19	0	18	1	10	21	1
Peak Hour Factor	0.70	0.70	0.70	0.70	0.70	0.70	0.70	0.70	0.70	0.70	0.70	0.70
Hourly flow rate (vph)	0	14	0	1	9	27	0	26	1	14	30	1

Direction, Lane #	EB 1	WB 1	NB 1	SB 1
Volume Total (vph)	14	37	27	46
Volume Left (vph)	0	1	0	14
Volume Right (vph)	0	27	1	1
Hadj (s)	0.00	-0.43	-0.03	0.04
Departure Headway (s)	4.1	3.6	4.0	4.1
Degree Utilization, x	0.02	0.04	0.03	0.05
Capacity (veh/h)	858	964	872	868
Control Delay (s)	7.2	6.8	7.1	7.3
Approach Delay (s)	7.2	6.8	7.1	7.3
Approach LOS	A	A	A	A

Intersection Summary			
Delay	7.1		
Level of Service	A		
Intersection Capacity Utilization	18.4%	ICU Level of Service	A
Analysis Period (min)	15		

Lanes, Volumes, Timings
3: White St & Truman Ave

10/30/2013

Lane Group	EBL	EBT	EBR	WBL	WBT	WBR	NBL	NBT	NBR	SBL	SBT	SBR
Lane Configurations												
Volume (vph)	24	227	134	12	12	3	133	141	39	70	338	16
Ideal Flow (vphpl)	1900	1900	1900	1900	1900	1900	1900	1900	1900	1900	1900	1900
Lane Util. Factor	1.00	1.00	1.00	1.00	1.00	1.00	1.00	1.00	1.00	1.00	1.00	1.00
Frt			0.850		0.986			0.968			0.993	
Flt Protected		0.995			0.978		0.950			0.950		
Satd. Flow (prot)	0	1872	1599	0	1814	0	1787	1821	0	1787	1868	0
Flt Permitted		0.971			0.830		0.501			0.632		
Satd. Flow (perm)	0	1827	1599	0	1540	0	942	1821	0	1189	1868	0
Right Turn on Red			Yes			Yes			Yes			Yes
Satd. Flow (RTOR)			149		3			14			2	
Link Speed (mph)		30			30			30			30	
Link Distance (ft)		194			196			234			193	
Travel Time (s)		4.4			4.5			5.3			4.4	
Peak Hour Factor	0.90	0.90	0.90	0.90	0.90	0.90	0.90	0.90	0.90	0.90	0.90	0.90
Heavy Vehicles (%)	1%	1%	1%	1%	1%	1%	1%	1%	1%	1%	1%	1%
Adj. Flow (vph)	27	252	149	13	13	3	148	157	43	78	376	18
Shared Lane Traffic (%)												
Lane Group Flow (vph)	0	279	149	0	29	0	148	200	0	78	394	0
Enter Blocked Intersection	No	No	No	No	No	No	No	No	No	No	No	No
Lane Alignment	Left	Left	Right	Left	Left	Right	Left	Left	Right	Left	Left	Right
Median Width(ft)		0			0			12			12	
Link Offset(ft)		0			0			0			0	
Crosswalk Width(ft)		16			16			16			16	
Two way Left Turn Lane												
Headway Factor	1.00	1.00	1.00	1.00	1.00	1.00	1.00	1.00	1.00	1.00	1.00	1.00
Turning Speed (mph)	15		9	15		9	15		9	15		9
Number of Detectors	1	2	1	1	2		1	2		1	2	
Detector Template	Left	Thru	Right	Left	Thru		Left	Thru		Left	Thru	
Leading Detector (ft)	20	100	20	20	100		20	100		20	100	
Trailing Detector (ft)	0	0	0	0	0		0	0		0	0	
Detector 1 Position(ft)	0	0	0	0	0		0	0		0	0	
Detector 1 Size(ft)	20	6	20	20	6		20	6		20	6	
Detector 1 Type	Cl+Ex	Cl+Ex	Cl+Ex	Cl+Ex	Cl+Ex		Cl+Ex	Cl+Ex		Cl+Ex	Cl+Ex	
Detector 1 Channel												
Detector 1 Extend (s)	0.0	0.0	0.0	0.0	0.0		0.0	0.0		0.0	0.0	
Detector 1 Queue (s)	0.0	0.0	0.0	0.0	0.0		0.0	0.0		0.0	0.0	
Detector 1 Delay (s)	0.0	0.0	0.0	0.0	0.0		0.0	0.0		0.0	0.0	
Detector 2 Position(ft)		94			94			94			94	
Detector 2 Size(ft)		6			6			6			6	
Detector 2 Type		Cl+Ex			Cl+Ex			Cl+Ex			Cl+Ex	
Detector 2 Channel												
Detector 2 Extend (s)		0.0			0.0			0.0			0.0	
Turn Type	Perm	NA	Perm	Perm	NA		Perm	NA		Perm	NA	
Protected Phases		4			8			2			6	
Permitted Phases	4		4	8			2			6		
Detector Phase	4	4	4	8	8		2	2		6	6	
Switch Phase												
Minimum Initial (s)	4.0	4.0	4.0	4.0	4.0		4.0	4.0		4.0	4.0	

Lane Group	EBL	EBT	EBR	WBL	WBT	WBR	NBL	NBT	NBR	SBL	SBT	SBR
Minimum Split (s)	21.0	21.0	21.0	21.0	21.0		21.0	21.0		21.0	21.0	
Total Split (s)	65.0	65.0	65.0	65.0	65.0		40.0	40.0		40.0	40.0	
Total Split (%)	61.9%	61.9%	61.9%	61.9%	61.9%		38.1%	38.1%		38.1%	38.1%	
Maximum Green (s)	60.0	60.0	60.0	60.0	60.0		35.0	35.0		35.0	35.0	
Yellow Time (s)	4.0	4.0	4.0	4.0	4.0		4.0	4.0		4.0	4.0	
All-Red Time (s)	1.0	1.0	1.0	1.0	1.0		1.0	1.0		1.0	1.0	
Lost Time Adjust (s)		0.0	0.0		0.0		0.0	0.0		0.0	0.0	
Total Lost Time (s)		5.0	5.0		5.0		5.0	5.0		5.0	5.0	
Lead/Lag												
Lead-Lag Optimize?												
Vehicle Extension (s)	3.0	3.0	3.0	3.0	3.0		3.0	3.0		3.0	3.0	
Recall Mode	None	None	None	None	None		Max	Max		Max	Max	
Walk Time (s)	5.0	5.0	5.0	5.0	5.0		5.0	5.0		5.0	5.0	
Flash Dont Walk (s)	11.0	11.0	11.0	11.0	11.0		11.0	11.0		11.0	11.0	
Pedestrian Calls (#/hr)	0	0	0	0	0		0	0		0	0	
Act Effct Green (s)		14.6	14.6		14.6		35.2	35.2		35.2	35.2	
Actuated g/C Ratio		0.24	0.24		0.24		0.59	0.59		0.59	0.59	
v/c Ratio		0.63	0.30		0.08		0.27	0.19		0.11	0.36	
Control Delay		26.7	5.3		15.8		8.7	6.7		7.1	8.4	
Queue Delay		0.0	0.0		0.0		0.0	0.0		0.0	0.0	
Total Delay		26.7	5.3		15.8		8.7	6.7		7.1	8.4	
LOS		C	A		B		A	A		A	A	
Approach Delay		19.2			15.8			7.5			8.2	
Approach LOS		B			B			A			A	

Intersection Summary

Area Type: Other
Cycle Length: 105
Actuated Cycle Length: 59.8
Natural Cycle: 45
Control Type: Actuated-Uncoordinated
Maximum v/c Ratio: 0.63
Intersection Signal Delay: 11.9 Intersection LOS: B
Intersection Capacity Utilization 52.1% ICU Level of Service A
Analysis Period (min) 15

Splits and Phases: 3: White St & Truman Ave

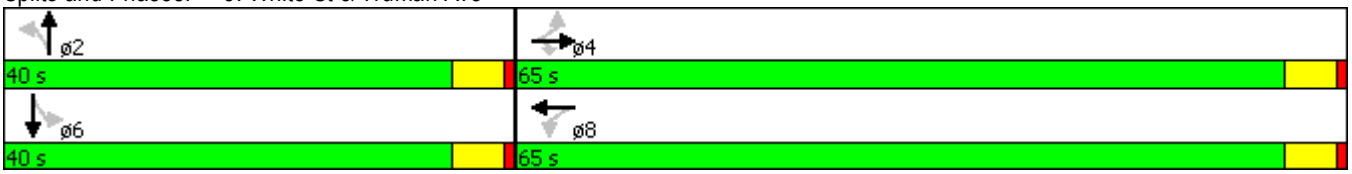

Lane Group	EBL	EBT	EBR	WBL	WBT	WBR	NBL	NBT	NBR	SBL	SBT	SBR
Lane Configurations												
Volume (vph)	9	125	177	16	42	10	37	284	4	29	503	34
Ideal Flow (vphpl)	1900	1900	1900	1900	1900	1900	1900	1900	1900	1900	1900	1900
Lane Util. Factor	1.00	1.00	1.00	1.00	1.00	1.00	1.00	1.00	1.00	1.00	1.00	1.00
Frt		0.923			0.979			0.998			0.992	
Flt Protected		0.999			0.988			0.994			0.997	
Satd. Flow (prot)	0	1752	0	0	1838	0	0	1868	0	0	1863	0
Flt Permitted		0.993			0.758			0.901			0.971	
Satd. Flow (perm)	0	1741	0	0	1410	0	0	1694	0	0	1814	0
Right Turn on Red			Yes			Yes			Yes			Yes
Satd. Flow (RTOR)		59			8			1			7	
Link Speed (mph)		30			30			30			30	
Link Distance (ft)		223			217			206			174	
Travel Time (s)		5.1			4.9			4.7			4.0	
Peak Hour Factor	0.95	0.95	0.95	0.95	0.95	0.95	0.95	0.95	0.95	0.95	0.95	0.95
Heavy Vehicles (%)	0%	0%	0%	0%	0%	0%	0%	1%	0%	0%	1%	0%
Adj. Flow (vph)	9	132	186	17	44	11	39	299	4	31	529	36
Shared Lane Traffic (%)												
Lane Group Flow (vph)	0	327	0	0	72	0	0	342	0	0	596	0
Enter Blocked Intersection	No	No	No	No	No	No	No	No	No	No	No	No
Lane Alignment	Left	Left	Right	Left	Left	Right	Left	Left	Right	Left	Left	Right
Median Width(ft)		0			0			0			0	
Link Offset(ft)		0			0			0			0	
Crosswalk Width(ft)		16			16			16			16	
Two way Left Turn Lane												
Headway Factor	1.00	1.00	1.00	1.00	1.00	1.00	1.00	1.00	1.00	1.00	1.00	1.00
Turning Speed (mph)	15		9	15		9	15		9	15		9
Number of Detectors	1	2		1	2		1	2		1	2	
Detector Template	Left	Thru		Left	Thru		Left	Thru		Left	Thru	
Leading Detector (ft)	20	100		20	100		20	100		20	100	
Trailing Detector (ft)	0	0		0	0		0	0		0	0	
Detector 1 Position(ft)	0	0		0	0		0	0		0	0	
Detector 1 Size(ft)	20	6		20	6		20	6		20	6	
Detector 1 Type	Cl+Ex	Cl+Ex		Cl+Ex	Cl+Ex		Cl+Ex	Cl+Ex		Cl+Ex	Cl+Ex	
Detector 1 Channel												
Detector 1 Extend (s)	0.0	0.0		0.0	0.0		0.0	0.0		0.0	0.0	
Detector 1 Queue (s)	0.0	0.0		0.0	0.0		0.0	0.0		0.0	0.0	
Detector 1 Delay (s)	0.0	0.0		0.0	0.0		0.0	0.0		0.0	0.0	
Detector 2 Position(ft)		94			94			94			94	
Detector 2 Size(ft)		6			6			6			6	
Detector 2 Type		Cl+Ex			Cl+Ex			Cl+Ex			Cl+Ex	
Detector 2 Channel												
Detector 2 Extend (s)		0.0			0.0			0.0			0.0	
Turn Type	Perm	NA		Perm	NA		Perm	NA		Perm	NA	
Protected Phases		4			8			2			6	
Permitted Phases	4			8			2			6		
Detector Phase	4	4		8	8		2	2		6	6	
Switch Phase												
Minimum Initial (s)	4.0	4.0		4.0	4.0		4.0	4.0		4.0	4.0	

Lane Group	EBL	EBT	EBR	WBL	WBT	WBR	NBL	NBT	NBR	SBL	SBT	SBR
Minimum Split (s)	21.0	21.0		21.0	21.0		21.0	21.0		21.0	21.0	
Total Split (s)	30.0	30.0		30.0	30.0		75.0	75.0		75.0	75.0	
Total Split (%)	28.6%	28.6%		28.6%	28.6%		71.4%	71.4%		71.4%	71.4%	
Maximum Green (s)	25.0	25.0		25.0	25.0		70.0	70.0		70.0	70.0	
Yellow Time (s)	4.0	4.0		4.0	4.0		4.0	4.0		4.0	4.0	
All-Red Time (s)	1.0	1.0		1.0	1.0		1.0	1.0		1.0	1.0	
Lost Time Adjust (s)		0.0			0.0			0.0			0.0	
Total Lost Time (s)		5.0			5.0			5.0			5.0	
Lead/Lag												
Lead-Lag Optimize?												
Vehicle Extension (s)	3.0	3.0		3.0	3.0		3.0	3.0		3.0	3.0	
Recall Mode	None	None		None	None		Max	Max		Max	Max	
Walk Time (s)	5.0	5.0		5.0	5.0		5.0	5.0		5.0	5.0	
Flash Dont Walk (s)	11.0	11.0		11.0	11.0		11.0	11.0		11.0	11.0	
Pedestrian Calls (#/hr)	0	0		0	0		0	0		0	0	
Act Effct Green (s)		20.1			20.1			70.2			70.2	
Actuated g/C Ratio		0.20			0.20			0.70			0.70	
v/c Ratio		0.83			0.25			0.29			0.47	
Control Delay		49.2			31.9			7.0			8.8	
Queue Delay		0.0			0.0			0.0			0.0	
Total Delay		49.2			31.9			7.0			8.8	
LOS		D			C			A			A	
Approach Delay		49.2			31.9			7.0			8.8	
Approach LOS		D			C			A			A	

Intersection Summary

Area Type: Other
Cycle Length: 105
Actuated Cycle Length: 100.3
Natural Cycle: 50
Control Type: Actuated-Uncoordinated
Maximum v/c Ratio: 0.83
Intersection Signal Delay: 19.5 Intersection LOS: B
Intersection Capacity Utilization 60.9% ICU Level of Service B
Analysis Period (min) 15

Splits and Phases: 8: White St & United St

Lanes, Volumes, Timings
23: White St & Flagler Ave

10/30/2013

Lane Group	EBL	EBT	EBR	WBL	WBT	WBR	NBL	NBT	NBR	SBL	SBT	SBR
Lane Configurations												
Volume (vph)	10	187	57	12	131	180	6	97	5	311	305	10
Ideal Flow (vphpl)	1900	1900	1900	1900	1900	1900	1900	1900	1900	1900	1900	1900
Lane Util. Factor	1.00	1.00	1.00	1.00	1.00	1.00	1.00	1.00	1.00	1.00	1.00	1.00
Frt			0.850			0.850		0.994			0.998	
Flt Protected		0.997			0.996			0.997			0.976	
Satd. Flow (prot)	0	1894	1615	0	1892	1599	0	1865	0	0	1833	0
Flt Permitted		0.980			0.961			0.975			0.785	
Satd. Flow (perm)	0	1862	1615	0	1826	1599	0	1824	0	0	1474	0
Right Turn on Red			Yes			Yes			Yes			Yes
Satd. Flow (RTOR)			61			191		4			1	
Link Speed (mph)		30			30			30			30	
Link Distance (ft)		214			197			162			162	
Travel Time (s)		4.9			4.5			3.7			3.7	
Peak Hour Factor	0.94	0.94	0.94	0.94	0.94	0.94	0.94	0.94	0.94	0.94	0.94	0.94
Heavy Vehicles (%)	0%	0%	0%	0%	0%	1%	0%	1%	1%	1%	1%	0%
Adj. Flow (vph)	11	199	61	13	139	191	6	103	5	331	324	11
Shared Lane Traffic (%)												
Lane Group Flow (vph)	0	210	61	0	152	191	0	114	0	0	666	0
Enter Blocked Intersection	No	No	No	No	No	No	No	No	No	No	No	No
Lane Alignment	Left	Left	Right	Left	Left	Right	Left	Left	Right	Left	Left	Right
Median Width(ft)		0			0			0			0	
Link Offset(ft)		0			0			0			0	
Crosswalk Width(ft)		16			16			16			16	
Two way Left Turn Lane												
Headway Factor	1.00	1.00	1.00	1.00	1.00	1.00	1.00	1.00	1.00	1.00	1.00	1.00
Turning Speed (mph)	15		9	15		9	15		9	15		9
Number of Detectors	1	2	1	1	2	1	1	2		1	2	
Detector Template	Left	Thru	Right	Left	Thru	Right	Left	Thru		Left	Thru	
Leading Detector (ft)	20	100	20	20	100	20	20	100		20	100	
Trailing Detector (ft)	0	0	0	0	0	0	0	0		0	0	
Detector 1 Position(ft)	0	0	0	0	0	0	0	0		0	0	
Detector 1 Size(ft)	20	6	20	20	6	20	20	6		20	6	
Detector 1 Type	Cl+Ex	Cl+Ex	Cl+Ex	Cl+Ex	Cl+Ex	Cl+Ex	Cl+Ex	Cl+Ex		Cl+Ex	Cl+Ex	
Detector 1 Channel												
Detector 1 Extend (s)	0.0	0.0	0.0	0.0	0.0	0.0	0.0	0.0		0.0	0.0	
Detector 1 Queue (s)	0.0	0.0	0.0	0.0	0.0	0.0	0.0	0.0		0.0	0.0	
Detector 1 Delay (s)	0.0	0.0	0.0	0.0	0.0	0.0	0.0	0.0		0.0	0.0	
Detector 2 Position(ft)		94			94			94			94	
Detector 2 Size(ft)		6			6			6			6	
Detector 2 Type		Cl+Ex			Cl+Ex			Cl+Ex			Cl+Ex	
Detector 2 Channel												
Detector 2 Extend (s)		0.0			0.0			0.0			0.0	
Turn Type	Perm	NA	Perm	Perm	NA	Perm	Perm	NA		Perm	NA	
Protected Phases		4			8			2			6	
Permitted Phases	4		4	8		8	2			6		
Detector Phase	4	4	4	8	8	8	2	2		6	6	
Switch Phase												
Minimum Initial (s)	4.0	4.0	4.0	4.0	4.0	4.0	4.0	4.0		4.0	4.0	

Lane Group	EBL	EBT	EBR	WBL	WBT	WBR	NBL	NBT	NBR	SBL	SBT	SBR
Minimum Split (s)	21.0	21.0	21.0	21.0	21.0	21.0	21.0	21.0		21.0	21.0	
Total Split (s)	40.0	40.0	40.0	40.0	40.0	40.0	65.0	65.0		65.0	65.0	
Total Split (%)	38.1%	38.1%	38.1%	38.1%	38.1%	38.1%	61.9%	61.9%		61.9%	61.9%	
Maximum Green (s)	35.0	35.0	35.0	35.0	35.0	35.0	60.0	60.0		60.0	60.0	
Yellow Time (s)	4.0	4.0	4.0	4.0	4.0	4.0	4.0	4.0		4.0	4.0	
All-Red Time (s)	1.0	1.0	1.0	1.0	1.0	1.0	1.0	1.0		1.0	1.0	
Lost Time Adjust (s)		0.0	0.0		0.0	0.0		0.0			0.0	
Total Lost Time (s)		5.0	5.0		5.0	5.0		5.0			5.0	
Lead/Lag												
Lead-Lag Optimize?												
Vehicle Extension (s)	3.0	3.0	3.0	3.0	3.0	3.0	3.0	3.0		3.0	3.0	
Recall Mode	None	None	None	None	None	None	Max	Max		Max	Max	
Walk Time (s)	5.0	5.0	5.0	5.0	5.0	5.0	5.0	5.0		5.0	5.0	
Flash Dont Walk (s)	11.0	11.0	11.0	11.0	11.0	11.0	11.0	11.0		11.0	11.0	
Pedestrian Calls (#/hr)	0	0	0	0	0	0	0	0		0	0	
Act Effct Green (s)		14.7	14.7		14.7	14.7		60.1			60.1	
Actuated g/C Ratio		0.17	0.17		0.17	0.17		0.71			0.71	
v/c Ratio		0.65	0.19		0.48	0.44		0.09			0.64	
Control Delay		42.6	9.5		36.7	8.2		4.5			10.8	
Queue Delay		0.0	0.0		0.0	0.0		0.0			0.0	
Total Delay		42.6	9.5		36.7	8.2		4.5			10.8	
LOS		D	A		D	A		A			B	
Approach Delay		35.2			20.8			4.5			10.8	
Approach LOS		D			C			A			B	

Intersection Summary

Area Type: Other
Cycle Length: 105
Actuated Cycle Length: 84.8
Natural Cycle: 60
Control Type: Actuated-Uncoordinated
Maximum v/c Ratio: 0.65
Intersection Signal Delay: 17.5 Intersection LOS: B
Intersection Capacity Utilization 66.9% ICU Level of Service C
Analysis Period (min) 15

Splits and Phases: 23: White St & Flagler Ave

HCM Unsignalized Intersection Capacity Analysis
13: White St & Seminary St

10/30/2013

Movement	EBL	EBT	EBR	WBL	WBT	WBR	NBL	NBT	NBR	SBL	SBT	SBR
Lane Configurations												
Volume (veh/h)	6	5	8	4	3	15	17	309	3	20	692	11
Sign Control		Stop			Stop			Free			Free	
Grade		0%			0%			0%			0%	
Peak Hour Factor	0.89	0.89	0.89	0.89	0.89	0.89	0.89	0.89	0.89	0.89	0.89	0.89
Hourly flow rate (vph)	7	6	9	4	3	17	19	347	3	22	778	12
Pedestrians												
Lane Width (ft)												
Walking Speed (ft/s)												
Percent Blockage												
Right turn flare (veh)												
Median type								None			None	
Median storage veh)												
Upstream signal (ft)												
pX, platoon unblocked												
vC, conflicting volume	1234	1217	784	1228	1222	349	790			351		
vC1, stage 1 conf vol												
vC2, stage 2 conf vol												
vCu, unblocked vol	1234	1217	784	1228	1222	349	790			351		
tC, single (s)	7.1	6.5	6.2	7.1	6.5	6.2	4.1			4.1		
tC, 2 stage (s)												
tF (s)	3.5	4.0	3.3	3.5	4.0	3.3	2.2			2.2		
p0 queue free %	95	97	98	97	98	98	98			98		
cM capacity (veh/h)	144	175	397	145	174	699	839			1219		

Direction, Lane #	EB 1	WB 1	NB 1	SB 1
Volume Total	21	25	370	812
Volume Left	7	4	19	22
Volume Right	9	17	3	12
cSH	210	331	839	1219
Volume to Capacity	0.10	0.07	0.02	0.02
Queue Length 95th (ft)	8	6	2	1
Control Delay (s)	24.0	16.7	0.7	0.5
Lane LOS	C	C	A	A
Approach Delay (s)	24.0	16.7	0.7	0.5
Approach LOS	C	C		

Intersection Summary			
Average Delay	1.3		
Intersection Capacity Utilization	53.6%	ICU Level of Service	A
Analysis Period (min)	15		

HCM Unsignalized Intersection Capacity Analysis
18: White St & South St

10/30/2013

Movement	EBL	EBT	EBR	WBL	WBT	WBR	NBL	NBT	NBR	SBL	SBT	SBR
Lane Configurations												
Volume (veh/h)	14	17	63	2	2	8	19	285	5	22	513	9
Sign Control		Stop			Stop			Free			Free	
Grade		0%			0%			0%			0%	
Peak Hour Factor	0.90	0.90	0.90	0.90	0.90	0.90	0.90	0.90	0.90	0.90	0.90	0.90
Hourly flow rate (vph)	16	19	70	2	2	9	21	317	6	24	570	10
Pedestrians												
Lane Width (ft)												
Walking Speed (ft/s)												
Percent Blockage												
Right turn flare (veh)												
Median type								None			None	
Median storage veh)												
Upstream signal (ft)												
pX, platoon unblocked												
vC, conflicting volume	996	988	575	1065	991	319	580			322		
vC1, stage 1 conf vol												
vC2, stage 2 conf vol												
vCu, unblocked vol	996	988	575	1065	991	319	580			322		
tC, single (s)	7.1	6.5	6.2	7.1	6.5	6.2	4.1			4.1		
tC, 2 stage (s)												
tF (s)	3.5	4.0	3.3	3.5	4.0	3.3	2.2			2.2		
p0 queue free %	93	92	87	99	99	99	98			98		
cM capacity (veh/h)	214	239	521	159	238	726	1004			1249		

Direction, Lane #	EB 1	WB 1	NB 1	SB 1
Volume Total	104	13	343	604
Volume Left	16	2	21	24
Volume Right	70	9	6	10
cSH	365	375	1004	1249
Volume to Capacity	0.29	0.04	0.02	0.02
Queue Length 95th (ft)	29	3	2	1
Control Delay (s)	18.8	14.9	0.7	0.5
Lane LOS	C	B	A	A
Approach Delay (s)	18.8	14.9	0.7	0.5
Approach LOS	C	B		

Intersection Summary			
Average Delay	2.6		
Intersection Capacity Utilization	47.9%	ICU Level of Service	A
Analysis Period (min)	15		

HCM Unsignalized Intersection Capacity Analysis
28: Grinnell St & United St

10/30/2013

Movement	EBL	EBT	EBR	WBL	WBT	WBR	NBL	NBT	NBR	SBL	SBT	SBR
Lane Configurations												
Volume (veh/h)	11	300	26	19	125	2	10	17	4	2	12	4
Sign Control		Free			Free			Stop			Stop	
Grade		0%			0%			0%			0%	
Peak Hour Factor	0.90	0.90	0.90	0.90	0.90	0.90	0.90	0.90	0.90	0.90	0.90	0.90
Hourly flow rate (vph)	12	333	29	21	139	2	11	19	4	2	13	4
Pedestrians												
Lane Width (ft)												
Walking Speed (ft/s)												
Percent Blockage												
Right turn flare (veh)												
Median type		None			None							
Median storage veh)												
Upstream signal (ft)												
pX, platoon unblocked												
vC, conflicting volume	141			362			566	556	348	568	569	140
vC1, stage 1 conf vol												
vC2, stage 2 conf vol												
vCu, unblocked vol	141			362			566	556	348	568	569	140
tC, single (s)	4.1			4.1			7.1	6.5	6.2	7.1	6.5	6.2
tC, 2 stage (s)												
tF (s)	2.2			2.2			3.5	4.0	3.3	3.5	4.0	3.3
p0 queue free %	99			98			97	96	99	99	97	100
cM capacity (veh/h)	1454			1208			417	431	700	411	424	913

Direction, Lane #	EB 1	WB 1	NB 1	SB 1
Volume Total	374	162	34	20
Volume Left	12	21	11	2
Volume Right	29	2	4	4
cSH	1454	1208	448	479
Volume to Capacity	0.01	0.02	0.08	0.04
Queue Length 95th (ft)	1	1	6	3
Control Delay (s)	0.3	1.2	13.7	12.8
Lane LOS	A	A	B	B
Approach Delay (s)	0.3	1.2	13.7	12.8
Approach LOS			B	B

Intersection Summary			
Average Delay	1.8		
Intersection Capacity Utilization	29.6%	ICU Level of Service	A
Analysis Period (min)	15		

HCM Unsignalized Intersection Capacity Analysis
33: Grinnell St & Seminary St

10/30/2013

Movement	EBL	EBT	EBR	WBL	WBT	WBR	NBL	NBT	NBR	SBL	SBT	SBR
Lane Configurations												
Sign Control		Stop			Stop			Stop			Stop	
Volume (vph)	5	4	0	1	8	17	0	18	2	21	31	0
Peak Hour Factor	0.92	0.92	0.92	0.92	0.92	0.92	0.92	0.92	0.92	0.92	0.92	0.92
Hourly flow rate (vph)	5	4	0	1	9	18	0	20	2	23	34	0

Direction, Lane #	EB 1	WB 1	NB 1	SB 1
Volume Total (vph)	10	28	22	57
Volume Left (vph)	5	1	0	23
Volume Right (vph)	0	18	2	0
Hadj (s)	0.11	-0.38	-0.06	0.08
Departure Headway (s)	4.2	3.7	4.0	4.1
Degree Utilization, x	0.01	0.03	0.02	0.06
Capacity (veh/h)	834	949	883	869
Control Delay (s)	7.3	6.8	7.1	7.4
Approach Delay (s)	7.3	6.8	7.1	7.4
Approach LOS	A	A	A	A

Intersection Summary			
Delay	7.2		
Level of Service	A		
Intersection Capacity Utilization	19.5%	ICU Level of Service	A
Analysis Period (min)	15		

Future 2016 Background (w/out Project)

Lanes, Volumes, Timings
3: White St & Truman Ave

10/30/2013

Lane Group	EBL	EBT	EBR	WBL	WBT	WBR	NBL	NBT	NBR	SBL	SBT	SBR
Lane Configurations												
Volume (vph)	20	247	89	9	26	4	177	267	62	28	190	20
Ideal Flow (vphpl)	1900	1900	1900	1900	1900	1900	1900	1900	1900	1900	1900	1900
Lane Util. Factor	1.00	1.00	1.00	1.00	1.00	1.00	1.00	1.00	1.00	1.00	1.00	1.00
Frt			0.850		0.985			0.972			0.986	
Flt Protected		0.996			0.989		0.950			0.950		
Satd. Flow (prot)	0	1874	1599	0	1833	0	1787	1829	0	1787	1855	0
Flt Permitted		0.978			0.905		0.607			0.507		
Satd. Flow (perm)	0	1840	1599	0	1677	0	1142	1829	0	954	1855	0
Right Turn on Red			Yes			Yes			Yes			Yes
Satd. Flow (RTOR)			103		5			12			5	
Link Speed (mph)		30			30			30			30	
Link Distance (ft)		194			196			234			193	
Travel Time (s)		4.4			4.5			5.3			4.4	
Peak Hour Factor	0.86	0.86	0.86	0.86	0.86	0.86	0.86	0.86	0.86	0.86	0.86	0.86
Heavy Vehicles (%)	1%	1%	1%	1%	1%	1%	1%	1%	1%	1%	1%	1%
Adj. Flow (vph)	23	287	103	10	30	5	206	310	72	33	221	23
Shared Lane Traffic (%)												
Lane Group Flow (vph)	0	310	103	0	45	0	206	382	0	33	244	0
Enter Blocked Intersection	No	No	No	No	No	No	No	No	No	No	No	No
Lane Alignment	Left	Left	Right	Left	Left	Right	Left	Left	Right	Left	Left	Right
Median Width(ft)		0			0			12			12	
Link Offset(ft)		0			0			0			0	
Crosswalk Width(ft)		16			16			16			16	
Two way Left Turn Lane												
Headway Factor	1.00	1.00	1.00	1.00	1.00	1.00	1.00	1.00	1.00	1.00	1.00	1.00
Turning Speed (mph)	15		9	15		9	15		9	15		9
Number of Detectors	1	2	1	1	2		1	2		1	2	
Detector Template	Left	Thru	Right	Left	Thru		Left	Thru		Left	Thru	
Leading Detector (ft)	20	100	20	20	100		20	100		20	100	
Trailing Detector (ft)	0	0	0	0	0		0	0		0	0	
Detector 1 Position(ft)	0	0	0	0	0		0	0		0	0	
Detector 1 Size(ft)	20	6	20	20	6		20	6		20	6	
Detector 1 Type	Cl+Ex	Cl+Ex	Cl+Ex	Cl+Ex	Cl+Ex		Cl+Ex	Cl+Ex		Cl+Ex	Cl+Ex	
Detector 1 Channel												
Detector 1 Extend (s)	0.0	0.0	0.0	0.0	0.0		0.0	0.0		0.0	0.0	
Detector 1 Queue (s)	0.0	0.0	0.0	0.0	0.0		0.0	0.0		0.0	0.0	
Detector 1 Delay (s)	0.0	0.0	0.0	0.0	0.0		0.0	0.0		0.0	0.0	
Detector 2 Position(ft)		94			94			94			94	
Detector 2 Size(ft)		6			6			6			6	
Detector 2 Type		Cl+Ex			Cl+Ex			Cl+Ex			Cl+Ex	
Detector 2 Channel												
Detector 2 Extend (s)		0.0			0.0			0.0			0.0	
Turn Type	Perm	NA	Perm	Perm	NA		Perm	NA		Perm	NA	
Protected Phases		4			8			2			6	
Permitted Phases	4		4	8			2			6		
Detector Phase	4	4	4	8	8		2	2		6	6	
Switch Phase												
Minimum Initial (s)	4.0	4.0	4.0	4.0	4.0		4.0	4.0		4.0	4.0	

Lane Group	EBL	EBT	EBR	WBL	WBT	WBR	NBL	NBT	NBR	SBL	SBT	SBR
Minimum Split (s)	21.0	21.0	21.0	21.0	21.0		21.0	21.0		21.0	21.0	
Total Split (s)	65.0	65.0	65.0	65.0	65.0		40.0	40.0		40.0	40.0	
Total Split (%)	61.9%	61.9%	61.9%	61.9%	61.9%		38.1%	38.1%		38.1%	38.1%	
Maximum Green (s)	60.0	60.0	60.0	60.0	60.0		35.0	35.0		35.0	35.0	
Yellow Time (s)	4.0	4.0	4.0	4.0	4.0		4.0	4.0		4.0	4.0	
All-Red Time (s)	1.0	1.0	1.0	1.0	1.0		1.0	1.0		1.0	1.0	
Lost Time Adjust (s)		0.0	0.0		0.0		0.0	0.0		0.0	0.0	
Total Lost Time (s)		5.0	5.0		5.0		5.0	5.0		5.0	5.0	
Lead/Lag												
Lead-Lag Optimize?												
Vehicle Extension (s)	3.0	3.0	3.0	3.0	3.0		3.0	3.0		3.0	3.0	
Recall Mode	None	None	None	None	None		Max	Max		Max	Max	
Walk Time (s)	5.0	5.0	5.0	5.0	5.0		5.0	5.0		5.0	5.0	
Flash Dont Walk (s)	11.0	11.0	11.0	11.0	11.0		11.0	11.0		11.0	11.0	
Pedestrian Calls (#/hr)	0	0	0	0	0		0	0		0	0	
Act Effct Green (s)		15.4	15.4		15.4		35.1	35.1		35.1	35.1	
Actuated g/C Ratio		0.25	0.25		0.25		0.58	0.58		0.58	0.58	
v/c Ratio		0.66	0.21		0.10		0.31	0.36		0.06	0.23	
Control Delay		27.4	5.4		15.7		9.2	8.5		7.2	7.5	
Queue Delay		0.0	0.0		0.0		0.0	0.0		0.0	0.0	
Total Delay		27.4	5.4		15.7		9.2	8.5		7.2	7.5	
LOS		C	A		B		A	A		A	A	
Approach Delay		21.9			15.7			8.7			7.5	
Approach LOS		C			B			A			A	

Intersection Summary

Area Type: Other
Cycle Length: 105
Actuated Cycle Length: 60.6
Natural Cycle: 45
Control Type: Actuated-Uncoordinated
Maximum v/c Ratio: 0.66
Intersection Signal Delay: 12.8 Intersection LOS: B
Intersection Capacity Utilization 48.9% ICU Level of Service A
Analysis Period (min) 15

Splits and Phases: 3: White St & Truman Ave

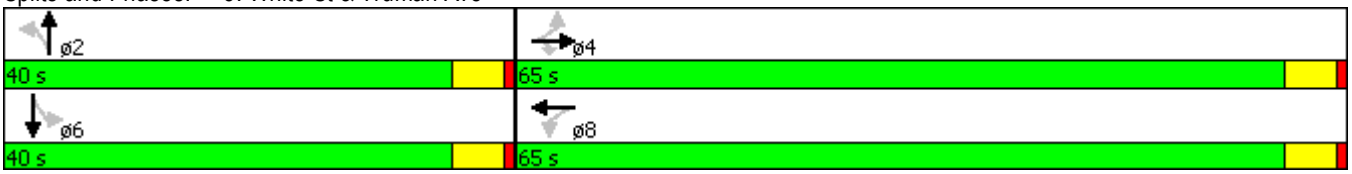

Lanes, Volumes, Timings
8: White St & United St

10/30/2013

Lane Group	EBL	EBT	EBR	WBL	WBT	WBR	NBL	NBT	NBR	SBL	SBT	SBR
Lane Configurations												
Volume (vph)	19	50	106	7	49	19	84	319	8	21	321	28
Ideal Flow (vphpl)	1900	1900	1900	1900	1900	1900	1900	1900	1900	1900	1900	1900
Lane Util. Factor	1.00	1.00	1.00	1.00	1.00	1.00	1.00	1.00	1.00	1.00	1.00	1.00
Frt		0.918			0.966			0.997			0.990	
Flt Protected		0.995			0.995			0.990			0.997	
Satd. Flow (prot)	0	1735	0	0	1826	0	0	1861	0	0	1859	0
Flt Permitted		0.964			0.928			0.846			0.966	
Satd. Flow (perm)	0	1681	0	0	1703	0	0	1590	0	0	1801	0
Right Turn on Red			Yes			Yes			Yes			Yes
Satd. Flow (RTOR)		69			15			2			8	
Link Speed (mph)		30			30			30			30	
Link Distance (ft)		223			217			206			174	
Travel Time (s)		5.1			4.9			4.7			4.0	
Peak Hour Factor	0.91	0.91	0.91	0.91	0.91	0.91	0.91	0.91	0.91	0.91	0.91	0.91
Heavy Vehicles (%)	0%	0%	0%	0%	0%	0%	0%	1%	0%	0%	1%	0%
Adj. Flow (vph)	21	55	116	8	54	21	92	351	9	23	353	31
Shared Lane Traffic (%)												
Lane Group Flow (vph)	0	192	0	0	83	0	0	452	0	0	407	0
Enter Blocked Intersection	No	No	No	No	No	No	No	No	No	No	No	No
Lane Alignment	Left	Left	Right	Left	Left	Right	Left	Left	Right	Left	Left	Right
Median Width(ft)		0			0			0			0	
Link Offset(ft)		0			0			0			0	
Crosswalk Width(ft)		16			16			16			16	
Two way Left Turn Lane												
Headway Factor	1.00	1.00	1.00	1.00	1.00	1.00	1.00	1.00	1.00	1.00	1.00	1.00
Turning Speed (mph)	15		9	15		9	15		9	15		9
Number of Detectors	1	2		1	2		1	2		1	2	
Detector Template	Left	Thru		Left	Thru		Left	Thru		Left	Thru	
Leading Detector (ft)	20	100		20	100		20	100		20	100	
Trailing Detector (ft)	0	0		0	0		0	0		0	0	
Detector 1 Position(ft)	0	0		0	0		0	0		0	0	
Detector 1 Size(ft)	20	6		20	6		20	6		20	6	
Detector 1 Type	Cl+Ex	Cl+Ex		Cl+Ex	Cl+Ex		Cl+Ex	Cl+Ex		Cl+Ex	Cl+Ex	
Detector 1 Channel												
Detector 1 Extend (s)	0.0	0.0		0.0	0.0		0.0	0.0		0.0	0.0	
Detector 1 Queue (s)	0.0	0.0		0.0	0.0		0.0	0.0		0.0	0.0	
Detector 1 Delay (s)	0.0	0.0		0.0	0.0		0.0	0.0		0.0	0.0	
Detector 2 Position(ft)		94			94			94			94	
Detector 2 Size(ft)		6			6			6			6	
Detector 2 Type		Cl+Ex			Cl+Ex			Cl+Ex			Cl+Ex	
Detector 2 Channel												
Detector 2 Extend (s)		0.0			0.0			0.0			0.0	
Turn Type	Perm	NA		Perm	NA		Perm	NA		Perm	NA	
Protected Phases		4			8			2			6	
Permitted Phases	4			8			2			6		
Detector Phase	4	4		8	8		2	2		6	6	
Switch Phase												
Minimum Initial (s)	4.0	4.0		4.0	4.0		4.0	4.0		4.0	4.0	

Lane Group	EBL	EBT	EBR	WBL	WBT	WBR	NBL	NBT	NBR	SBL	SBT	SBR
Minimum Split (s)	21.0	21.0		21.0	21.0		21.0	21.0		21.0	21.0	
Total Split (s)	30.0	30.0		30.0	30.0		75.0	75.0		75.0	75.0	
Total Split (%)	28.6%	28.6%		28.6%	28.6%		71.4%	71.4%		71.4%	71.4%	
Maximum Green (s)	25.0	25.0		25.0	25.0		70.0	70.0		70.0	70.0	
Yellow Time (s)	4.0	4.0		4.0	4.0		4.0	4.0		4.0	4.0	
All-Red Time (s)	1.0	1.0		1.0	1.0		1.0	1.0		1.0	1.0	
Lost Time Adjust (s)		0.0			0.0			0.0			0.0	
Total Lost Time (s)		5.0			5.0			5.0			5.0	
Lead/Lag												
Lead-Lag Optimize?												
Vehicle Extension (s)	3.0	3.0		3.0	3.0		3.0	3.0		3.0	3.0	
Recall Mode	None	None		None	None		Max	Max		Max	Max	
Walk Time (s)	5.0	5.0		5.0	5.0		5.0	5.0		5.0	5.0	
Flash Dont Walk (s)	11.0	11.0		11.0	11.0		11.0	11.0		11.0	11.0	
Pedestrian Calls (#/hr)	0	0		0	0		0	0		0	0	
Act Effct Green (s)		12.5			12.5			72.4			72.4	
Actuated g/C Ratio		0.13			0.13			0.76			0.76	
v/c Ratio		0.68			0.35			0.37			0.30	
Control Delay		36.9			33.5			5.3			4.5	
Queue Delay		0.0			0.0			0.0			0.0	
Total Delay		36.9			33.5			5.3			4.5	
LOS		D			C			A			A	
Approach Delay		36.9			33.5			5.3			4.5	
Approach LOS		D			C			A			A	

Intersection Summary

Area Type: Other
Cycle Length: 105
Actuated Cycle Length: 94.9
Natural Cycle: 45
Control Type: Actuated-Uncoordinated
Maximum v/c Ratio: 0.68
Intersection Signal Delay: 12.4 Intersection LOS: B
Intersection Capacity Utilization 68.2% ICU Level of Service C
Analysis Period (min) 15

Splits and Phases: 8: White St & United St

Lane Group	EBL	EBT	EBR	WBL	WBT	WBR	NBL	NBT	NBR	SBL	SBT	SBR
Lane Configurations												
Volume (vph)	5	72	12	15	159	228	11	140	13	239	168	2
Ideal Flow (vphpl)	1900	1900	1900	1900	1900	1900	1900	1900	1900	1900	1900	1900
Lane Util. Factor	1.00	1.00	1.00	1.00	1.00	1.00	1.00	1.00	1.00	1.00	1.00	1.00
Frt			0.850			0.850		0.989			0.999	
Flt Protected		0.997			0.996			0.997			0.972	
Satd. Flow (prot)	0	1894	1615	0	1892	1599	0	1856	0	0	1827	0
Flt Permitted		0.976			0.969			0.967			0.711	
Satd. Flow (perm)	0	1854	1615	0	1841	1599	0	1800	0	0	1336	0
Right Turn on Red			Yes			Yes			Yes			Yes
Satd. Flow (RTOR)			21			275		7				
Link Speed (mph)		30			30			30			30	
Link Distance (ft)		214			197			162			162	
Travel Time (s)		4.9			4.5			3.7			3.7	
Peak Hour Factor	0.83	0.83	0.83	0.83	0.83	0.83	0.83	0.83	0.83	0.83	0.83	0.83
Heavy Vehicles (%)	0%	0%	0%	0%	0%	1%	0%	1%	1%	1%	1%	0%
Adj. Flow (vph)	6	87	14	18	192	275	13	169	16	288	202	2
Shared Lane Traffic (%)												
Lane Group Flow (vph)	0	93	14	0	210	275	0	198	0	0	492	0
Enter Blocked Intersection	No	No	No	No	No	No	No	No	No	No	No	No
Lane Alignment	Left	Left	Right	Left	Left	Right	Left	Left	Right	Left	Left	Right
Median Width(ft)		0			0			0			0	
Link Offset(ft)		0			0			0			0	
Crosswalk Width(ft)		16			16			16			16	
Two way Left Turn Lane												
Headway Factor	1.00	1.00	1.00	1.00	1.00	1.00	1.00	1.00	1.00	1.00	1.00	1.00
Turning Speed (mph)	15		9	15		9	15		9	15		9
Number of Detectors	1	2	1	1	2	1	1	2		1	2	
Detector Template	Left	Thru	Right	Left	Thru	Right	Left	Thru		Left	Thru	
Leading Detector (ft)	20	100	20	20	100	20	20	100		20	100	
Trailing Detector (ft)	0	0	0	0	0	0	0	0		0	0	
Detector 1 Position(ft)	0	0	0	0	0	0	0	0		0	0	
Detector 1 Size(ft)	20	6	20	20	6	20	20	6		20	6	
Detector 1 Type	Cl+Ex	Cl+Ex	Cl+Ex	Cl+Ex	Cl+Ex	Cl+Ex	Cl+Ex	Cl+Ex		Cl+Ex	Cl+Ex	
Detector 1 Channel												
Detector 1 Extend (s)	0.0	0.0	0.0	0.0	0.0	0.0	0.0	0.0		0.0	0.0	
Detector 1 Queue (s)	0.0	0.0	0.0	0.0	0.0	0.0	0.0	0.0		0.0	0.0	
Detector 1 Delay (s)	0.0	0.0	0.0	0.0	0.0	0.0	0.0	0.0		0.0	0.0	
Detector 2 Position(ft)		94			94			94			94	
Detector 2 Size(ft)		6			6			6			6	
Detector 2 Type		Cl+Ex			Cl+Ex			Cl+Ex			Cl+Ex	
Detector 2 Channel												
Detector 2 Extend (s)		0.0			0.0			0.0			0.0	
Turn Type	Perm	NA	Perm	Perm	NA	Perm	Perm	NA		Perm	NA	
Protected Phases		4			8			2			6	
Permitted Phases	4		4	8		8	2			6		
Detector Phase	4	4	4	8	8	8	2	2		6	6	
Switch Phase												
Minimum Initial (s)	4.0	4.0	4.0	4.0	4.0	4.0	4.0	4.0		4.0	4.0	

Lane Group	EBL	EBT	EBR	WBL	WBT	WBR	NBL	NBT	NBR	SBL	SBT	SBR
Minimum Split (s)	21.0	21.0	21.0	21.0	21.0	21.0	21.0	21.0		21.0	21.0	
Total Split (s)	40.0	40.0	40.0	40.0	40.0	40.0	65.0	65.0		65.0	65.0	
Total Split (%)	38.1%	38.1%	38.1%	38.1%	38.1%	38.1%	61.9%	61.9%		61.9%	61.9%	
Maximum Green (s)	35.0	35.0	35.0	35.0	35.0	35.0	60.0	60.0		60.0	60.0	
Yellow Time (s)	4.0	4.0	4.0	4.0	4.0	4.0	4.0	4.0		4.0	4.0	
All-Red Time (s)	1.0	1.0	1.0	1.0	1.0	1.0	1.0	1.0		1.0	1.0	
Lost Time Adjust (s)		0.0	0.0		0.0	0.0		0.0			0.0	
Total Lost Time (s)		5.0	5.0		5.0	5.0		5.0			5.0	
Lead/Lag												
Lead-Lag Optimize?												
Vehicle Extension (s)	3.0	3.0	3.0	3.0	3.0	3.0	3.0	3.0		3.0	3.0	
Recall Mode	None	None	None	None	None	None	Max	Max		Max	Max	
Walk Time (s)	5.0	5.0	5.0	5.0	5.0	5.0	5.0	5.0		5.0	5.0	
Flash Dont Walk (s)	11.0	11.0	11.0	11.0	11.0	11.0	11.0	11.0		11.0	11.0	
Pedestrian Calls (#/hr)	0	0	0	0	0	0	0	0		0	0	
Act Effct Green (s)		15.5	15.5		15.5	15.5		60.2			60.2	
Actuated g/C Ratio		0.18	0.18		0.18	0.18		0.70			0.70	
v/c Ratio		0.28	0.05		0.63	0.54		0.16			0.52	
Control Delay		31.8	9.4		41.1	8.0		5.1			9.4	
Queue Delay		0.0	0.0		0.0	0.0		0.0			0.0	
Total Delay		31.8	9.4		41.1	8.0		5.1			9.4	
LOS		C	A		D	A		A			A	
Approach Delay		28.9			22.4			5.1			9.4	
Approach LOS		C			C			A			A	

Intersection Summary

Area Type: Other
Cycle Length: 105
Actuated Cycle Length: 85.7
Natural Cycle: 55
Control Type: Actuated-Uncoordinated
Maximum v/c Ratio: 0.63
Intersection Signal Delay: 15.3 Intersection LOS: B
Intersection Capacity Utilization 59.3% ICU Level of Service B
Analysis Period (min) 15

Splits and Phases: 23: White St & Flagler Ave

HCM Unsignalized Intersection Capacity Analysis
13: White St & Seminary St

10/30/2013

Movement	EBL	EBT	EBR	WBL	WBT	WBR	NBL	NBT	NBR	SBL	SBT	SBR
Lane Configurations												
Volume (veh/h)	2	1	6	4	11	32	33	372	4	13	395	15
Sign Control		Stop			Stop			Free			Free	
Grade		0%			0%			0%			0%	
Peak Hour Factor	0.91	0.91	0.91	0.91	0.91	0.91	0.91	0.91	0.91	0.91	0.91	0.91
Hourly flow rate (vph)	2	1	7	4	12	35	36	409	4	14	434	16
Pedestrians												
Lane Width (ft)												
Walking Speed (ft/s)												
Percent Blockage												
Right turn flare (veh)												
Median type								None			None	
Median storage veh)												
Upstream signal (ft)												
pX, platoon unblocked												
vC, conflicting volume	996	957	442	962	963	411	451			413		
vC1, stage 1 conf vol												
vC2, stage 2 conf vol												
vCu, unblocked vol	996	957	442	962	963	411	451			413		
tC, single (s)	7.1	6.5	6.2	7.1	6.5	6.2	4.1			4.1		
tC, 2 stage (s)												
tF (s)	3.5	4.0	3.3	3.5	4.0	3.3	2.2			2.2		
p0 queue free %	99	100	99	98	95	95	97			99		
cM capacity (veh/h)	198	248	619	226	246	645	1121			1157		

Direction, Lane #	EB 1	WB 1	NB 1	SB 1
Volume Total	10	52	449	465
Volume Left	2	4	36	14
Volume Right	7	35	4	16
cSH	378	420	1121	1157
Volume to Capacity	0.03	0.12	0.03	0.01
Queue Length 95th (ft)	2	10	3	1
Control Delay (s)	14.8	14.8	1.0	0.4
Lane LOS	B	B	A	A
Approach Delay (s)	14.8	14.8	1.0	0.4
Approach LOS	B	B		

Intersection Summary			
Average Delay	1.6		
Intersection Capacity Utilization	44.6%	ICU Level of Service	A
Analysis Period (min)	15		

HCM Unsignalized Intersection Capacity Analysis
18: White St & South St

10/30/2013

Movement	EBL	EBT	EBR	WBL	WBT	WBR	NBL	NBT	NBR	SBL	SBT	SBR
Lane Configurations												
Volume (veh/h)	15	11	45	4	11	14	25	399	5	12	344	12
Sign Control		Stop			Stop			Free			Free	
Grade		0%			0%			0%			0%	
Peak Hour Factor	0.90	0.90	0.90	0.90	0.90	0.90	0.90	0.90	0.90	0.90	0.90	0.90
Hourly flow rate (vph)	17	12	50	4	12	16	28	443	6	13	382	13
Pedestrians												
Lane Width (ft)												
Walking Speed (ft/s)												
Percent Blockage												
Right turn flare (veh)												
Median type								None			None	
Median storage veh)												
Upstream signal (ft)												
pX, platoon unblocked												
vC, conflicting volume	939	920	389	973	924	446	396			449		
vC1, stage 1 conf vol												
vC2, stage 2 conf vol												
vCu, unblocked vol	939	920	389	973	924	446	396			449		
tC, single (s)	7.1	6.5	6.2	7.1	6.5	6.2	4.1			4.1		
tC, 2 stage (s)												
tF (s)	3.5	4.0	3.3	3.5	4.0	3.3	2.2			2.2		
p0 queue free %	93	95	92	98	95	97	98			99		
cM capacity (veh/h)	225	263	664	203	262	616	1174			1122		

Direction, Lane #	EB 1	WB 1	NB 1	SB 1
Volume Total	79	32	477	409
Volume Left	17	4	28	13
Volume Right	50	16	6	13
cSH	403	343	1174	1122
Volume to Capacity	0.20	0.09	0.02	0.01
Queue Length 95th (ft)	18	8	2	1
Control Delay (s)	16.1	16.6	0.7	0.4
Lane LOS	C	C	A	A
Approach Delay (s)	16.1	16.6	0.7	0.4
Approach LOS	C	C		

Intersection Summary			
Average Delay	2.3		
Intersection Capacity Utilization	45.2%	ICU Level of Service	A
Analysis Period (min)	15		

HCM Unsignalized Intersection Capacity Analysis
28: Grinnell St & United St

10/30/2013

Movement	EBL	EBT	EBR	WBL	WBT	WBR	NBL	NBT	NBR	SBL	SBT	SBR
Lane Configurations												
Volume (veh/h)	11	177	13	16	159	2	20	11	8	5	11	5
Sign Control		Free			Free			Stop			Stop	
Grade		0%			0%			0%			0%	
Peak Hour Factor	0.83	0.83	0.83	0.83	0.83	0.83	0.83	0.83	0.83	0.83	0.83	0.83
Hourly flow rate (vph)	13	213	16	19	192	2	24	13	10	6	13	6
Pedestrians												
Lane Width (ft)												
Walking Speed (ft/s)												
Percent Blockage												
Right turn flare (veh)												
Median type		None			None							
Median storage veh)												
Upstream signal (ft)												
pX, platoon unblocked												
vC, conflicting volume	194			229			492	480	221	495	487	193
vC1, stage 1 conf vol												
vC2, stage 2 conf vol												
vCu, unblocked vol	194			229			492	480	221	495	487	193
tC, single (s)	4.1			4.1			7.1	6.5	6.2	7.1	6.5	6.2
tC, 2 stage (s)												
tF (s)	2.2			2.2			3.5	4.0	3.3	3.5	4.0	3.3
p0 queue free %	99			99			95	97	99	99	97	99
cM capacity (veh/h)	1391			1351			468	477	824	464	472	854

Direction, Lane #	EB 1	WB 1	NB 1	SB 1
Volume Total	242	213	47	25
Volume Left	13	19	24	6
Volume Right	16	2	10	6
cSH	1391	1351	516	526
Volume to Capacity	0.01	0.01	0.09	0.05
Queue Length 95th (ft)	1	1	7	4
Control Delay (s)	0.5	0.8	12.7	12.2
Lane LOS	A	A	B	B
Approach Delay (s)	0.5	0.8	12.7	12.2
Approach LOS			B	B

Intersection Summary			
Average Delay	2.3		
Intersection Capacity Utilization	24.8%	ICU Level of Service	A
Analysis Period (min)	15		

HCM Unsignalized Intersection Capacity Analysis
33: Grinnell St & Seminary St

10/30/2013

Movement	EBL	EBT	EBR	WBL	WBT	WBR	NBL	NBT	NBR	SBL	SBT	SBR
Lane Configurations												
Sign Control		Stop			Stop			Stop			Stop	
Volume (vph)	0	12	0	1	7	22	0	21	1	12	25	1
Peak Hour Factor	0.70	0.70	0.70	0.70	0.70	0.70	0.70	0.70	0.70	0.70	0.70	0.70
Hourly flow rate (vph)	0	17	0	1	10	31	0	30	1	17	36	1

Direction, Lane #	EB 1	WB 1	NB 1	SB 1
Volume Total (vph)	17	43	31	54
Volume Left (vph)	0	1	0	17
Volume Right (vph)	0	31	1	1
Hadj (s)	0.00	-0.43	-0.03	0.05
Departure Headway (s)	4.1	3.7	4.0	4.1
Degree Utilization, x	0.02	0.04	0.04	0.06
Capacity (veh/h)	848	954	863	861
Control Delay (s)	7.2	6.8	7.2	7.4
Approach Delay (s)	7.2	6.8	7.2	7.4
Approach LOS	A	A	A	A

Intersection Summary			
Delay	7.2		
Level of Service	A		
Intersection Capacity Utilization	18.7%	ICU Level of Service	A
Analysis Period (min)	15		

Lanes, Volumes, Timings
3: White St & Truman Ave

10/30/2013

Lane Group	EBL	EBT	EBR	WBL	WBT	WBR	NBL	NBT	NBR	SBL	SBT	SBR
Lane Configurations												
Volume (vph)	28	530	156	14	28	4	155	165	46	82	395	19
Ideal Flow (vphpl)	1900	1900	1900	1900	1900	1900	1900	1900	1900	1900	1900	1900
Lane Util. Factor	1.00	1.00	1.00	1.00	1.00	1.00	1.00	1.00	1.00	1.00	1.00	1.00
Frt			0.850		0.989			0.967			0.993	
Flt Protected		0.998			0.985		0.950			0.950		
Satd. Flow (prot)	0	1877	1599	0	1833	0	1787	1819	0	1787	1868	0
Flt Permitted		0.986			0.768		0.364			0.590		
Satd. Flow (perm)	0	1855	1599	0	1429	0	685	1819	0	1110	1868	0
Right Turn on Red			Yes			Yes			Yes			Yes
Satd. Flow (RTOR)			173		4			14			2	
Link Speed (mph)		30			30			30			30	
Link Distance (ft)		194			196			234			193	
Travel Time (s)		4.4			4.5			5.3			4.4	
Peak Hour Factor	0.90	0.90	0.90	0.90	0.90	0.90	0.90	0.90	0.90	0.90	0.90	0.90
Heavy Vehicles (%)	1%	1%	1%	1%	1%	1%	1%	1%	1%	1%	1%	1%
Adj. Flow (vph)	31	589	173	16	31	4	172	183	51	91	439	21
Shared Lane Traffic (%)												
Lane Group Flow (vph)	0	620	173	0	51	0	172	234	0	91	460	0
Enter Blocked Intersection	No	No	No	No	No	No	No	No	No	No	No	No
Lane Alignment	Left	Left	Right	Left	Left	Right	Left	Left	Right	Left	Left	Right
Median Width(ft)		0			0			12			12	
Link Offset(ft)		0			0			0			0	
Crosswalk Width(ft)		16			16			16			16	
Two way Left Turn Lane												
Headway Factor	1.00	1.00	1.00	1.00	1.00	1.00	1.00	1.00	1.00	1.00	1.00	1.00
Turning Speed (mph)	15		9	15		9	15		9	15		9
Number of Detectors	1	2	1	1	2		1	2		1	2	
Detector Template	Left	Thru	Right	Left	Thru		Left	Thru		Left	Thru	
Leading Detector (ft)	20	100	20	20	100		20	100		20	100	
Trailing Detector (ft)	0	0	0	0	0		0	0		0	0	
Detector 1 Position(ft)	0	0	0	0	0		0	0		0	0	
Detector 1 Size(ft)	20	6	20	20	6		20	6		20	6	
Detector 1 Type	Cl+Ex	Cl+Ex	Cl+Ex	Cl+Ex	Cl+Ex		Cl+Ex	Cl+Ex		Cl+Ex	Cl+Ex	
Detector 1 Channel												
Detector 1 Extend (s)	0.0	0.0	0.0	0.0	0.0		0.0	0.0		0.0	0.0	
Detector 1 Queue (s)	0.0	0.0	0.0	0.0	0.0		0.0	0.0		0.0	0.0	
Detector 1 Delay (s)	0.0	0.0	0.0	0.0	0.0		0.0	0.0		0.0	0.0	
Detector 2 Position(ft)		94			94			94			94	
Detector 2 Size(ft)		6			6			6			6	
Detector 2 Type		Cl+Ex			Cl+Ex			Cl+Ex			Cl+Ex	
Detector 2 Channel												
Detector 2 Extend (s)		0.0			0.0			0.0			0.0	
Turn Type	Perm	NA	Perm	Perm	NA		Perm	NA		Perm	NA	
Protected Phases		4			8			2			6	
Permitted Phases	4		4	8			2			6		
Detector Phase	4	4	4	8	8		2	2		6	6	
Switch Phase												
Minimum Initial (s)	4.0	4.0	4.0	4.0	4.0		4.0	4.0		4.0	4.0	

Lane Group	EBL	EBT	EBR	WBL	WBT	WBR	NBL	NBT	NBR	SBL	SBT	SBR
Minimum Split (s)	21.0	21.0	21.0	21.0	21.0		21.0	21.0		21.0	21.0	
Total Split (s)	65.0	65.0	65.0	65.0	65.0		40.0	40.0		40.0	40.0	
Total Split (%)	61.9%	61.9%	61.9%	61.9%	61.9%		38.1%	38.1%		38.1%	38.1%	
Maximum Green (s)	60.0	60.0	60.0	60.0	60.0		35.0	35.0		35.0	35.0	
Yellow Time (s)	4.0	4.0	4.0	4.0	4.0		4.0	4.0		4.0	4.0	
All-Red Time (s)	1.0	1.0	1.0	1.0	1.0		1.0	1.0		1.0	1.0	
Lost Time Adjust (s)		0.0	0.0		0.0		0.0	0.0		0.0	0.0	
Total Lost Time (s)		5.0	5.0		5.0		5.0	5.0		5.0	5.0	
Lead/Lag												
Lead-Lag Optimize?												
Vehicle Extension (s)	3.0	3.0	3.0	3.0	3.0		3.0	3.0		3.0	3.0	
Recall Mode	None	None	None	None	None		Max	Max		Max	Max	
Walk Time (s)	5.0	5.0	5.0	5.0	5.0		5.0	5.0		5.0	5.0	
Flash Dont Walk (s)	11.0	11.0	11.0	11.0	11.0		11.0	11.0		11.0	11.0	
Pedestrian Calls (#/hr)	0	0	0	0	0		0	0		0	0	
Act Effct Green (s)		32.5	32.5		32.5		35.5	35.5		35.5	35.5	
Actuated g/C Ratio		0.42	0.42		0.42		0.45	0.45		0.45	0.45	
v/c Ratio		0.80	0.23		0.09		0.55	0.28		0.18	0.54	
Control Delay		28.3	2.8		12.2		27.6	15.8		17.0	20.5	
Queue Delay		0.0	0.0		0.0		0.0	0.0		0.0	0.0	
Total Delay		28.3	2.8		12.2		27.6	15.8		17.0	20.5	
LOS		C	A		B		C	B		B	C	
Approach Delay		22.8			12.2			20.8			19.9	
Approach LOS		C			B			C			B	

Intersection Summary

Area Type: Other
Cycle Length: 105
Actuated Cycle Length: 78.1
Natural Cycle: 50
Control Type: Actuated-Uncoordinated
Maximum v/c Ratio: 0.80
Intersection Signal Delay: 21.2 Intersection LOS: C
Intersection Capacity Utilization 73.3% ICU Level of Service D
Analysis Period (min) 15

Splits and Phases: 3: White St & Truman Ave

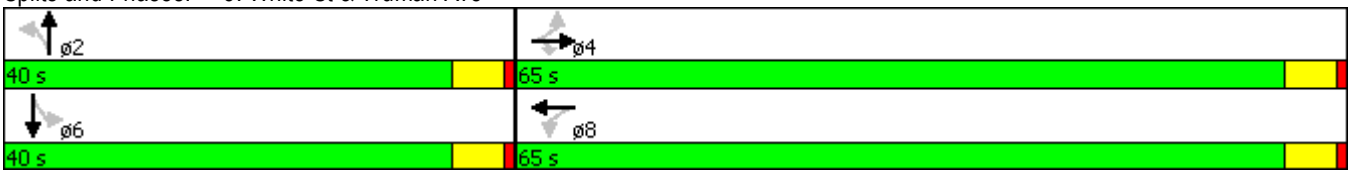

Lanes, Volumes, Timings
8: White St & United St

10/30/2013

Lane Group	EBL	EBT	EBR	WBL	WBT	WBR	NBL	NBT	NBR	SBL	SBT	SBR
Lane Configurations												
Volume (vph)	11	146	207	19	49	12	43	332	5	34	587	40
Ideal Flow (vphpl)	1900	1900	1900	1900	1900	1900	1900	1900	1900	1900	1900	1900
Lane Util. Factor	1.00	1.00	1.00	1.00	1.00	1.00	1.00	1.00	1.00	1.00	1.00	1.00
Frt		0.923			0.979			0.998			0.992	
Flt Protected		0.998			0.988			0.994			0.997	
Satd. Flow (prot)	0	1750	0	0	1838	0	0	1868	0	0	1863	0
Flt Permitted		0.991			0.721			0.882			0.965	
Satd. Flow (perm)	0	1738	0	0	1341	0	0	1658	0	0	1803	0
Right Turn on Red			Yes			Yes			Yes			Yes
Satd. Flow (RTOR)		59			8			1			7	
Link Speed (mph)		30			30			30			30	
Link Distance (ft)		223			217			206			174	
Travel Time (s)		5.1			4.9			4.7			4.0	
Peak Hour Factor	0.95	0.95	0.95	0.95	0.95	0.95	0.95	0.95	0.95	0.95	0.95	0.95
Heavy Vehicles (%)	0%	0%	0%	0%	0%	0%	0%	1%	0%	0%	1%	0%
Adj. Flow (vph)	12	154	218	20	52	13	45	349	5	36	618	42
Shared Lane Traffic (%)												
Lane Group Flow (vph)	0	384	0	0	85	0	0	399	0	0	696	0
Enter Blocked Intersection	No	No	No	No	No	No	No	No	No	No	No	No
Lane Alignment	Left	Left	Right	Left	Left	Right	Left	Left	Right	Left	Left	Right
Median Width(ft)		0			0			0			0	
Link Offset(ft)		0			0			0			0	
Crosswalk Width(ft)		16			16			16			16	
Two way Left Turn Lane												
Headway Factor	1.00	1.00	1.00	1.00	1.00	1.00	1.00	1.00	1.00	1.00	1.00	1.00
Turning Speed (mph)	15		9	15		9	15		9	15		9
Number of Detectors	1	2		1	2		1	2		1	2	
Detector Template	Left	Thru		Left	Thru		Left	Thru		Left	Thru	
Leading Detector (ft)	20	100		20	100		20	100		20	100	
Trailing Detector (ft)	0	0		0	0		0	0		0	0	
Detector 1 Position(ft)	0	0		0	0		0	0		0	0	
Detector 1 Size(ft)	20	6		20	6		20	6		20	6	
Detector 1 Type	Cl+Ex	Cl+Ex		Cl+Ex	Cl+Ex		Cl+Ex	Cl+Ex		Cl+Ex	Cl+Ex	
Detector 1 Channel												
Detector 1 Extend (s)	0.0	0.0		0.0	0.0		0.0	0.0		0.0	0.0	
Detector 1 Queue (s)	0.0	0.0		0.0	0.0		0.0	0.0		0.0	0.0	
Detector 1 Delay (s)	0.0	0.0		0.0	0.0		0.0	0.0		0.0	0.0	
Detector 2 Position(ft)		94			94			94			94	
Detector 2 Size(ft)		6			6			6			6	
Detector 2 Type		Cl+Ex			Cl+Ex			Cl+Ex			Cl+Ex	
Detector 2 Channel												
Detector 2 Extend (s)		0.0			0.0			0.0			0.0	
Turn Type	Perm	NA		Perm	NA		Perm	NA		Perm	NA	
Protected Phases		4			8			2			6	
Permitted Phases	4			8			2			6		
Detector Phase	4	4		8	8		2	2		6	6	
Switch Phase												
Minimum Initial (s)	4.0	4.0		4.0	4.0		4.0	4.0		4.0	4.0	

Lane Group	EBL	EBT	EBR	WBL	WBT	WBR	NBL	NBT	NBR	SBL	SBT	SBR
Minimum Split (s)	21.0	21.0		21.0	21.0		21.0	21.0		21.0	21.0	
Total Split (s)	30.0	30.0		30.0	30.0		75.0	75.0		75.0	75.0	
Total Split (%)	28.6%	28.6%		28.6%	28.6%		71.4%	71.4%		71.4%	71.4%	
Maximum Green (s)	25.0	25.0		25.0	25.0		70.0	70.0		70.0	70.0	
Yellow Time (s)	4.0	4.0		4.0	4.0		4.0	4.0		4.0	4.0	
All-Red Time (s)	1.0	1.0		1.0	1.0		1.0	1.0		1.0	1.0	
Lost Time Adjust (s)		0.0			0.0			0.0			0.0	
Total Lost Time (s)		5.0			5.0			5.0			5.0	
Lead/Lag												
Lead-Lag Optimize?												
Vehicle Extension (s)	3.0	3.0		3.0	3.0		3.0	3.0		3.0	3.0	
Recall Mode	None	None		None	None		Max	Max		Max	Max	
Walk Time (s)	5.0	5.0		5.0	5.0		5.0	5.0		5.0	5.0	
Flash Dont Walk (s)	11.0	11.0		11.0	11.0		11.0	11.0		11.0	11.0	
Pedestrian Calls (#/hr)	0	0		0	0		0	0		0	0	
Act Effct Green (s)		22.7			22.7			70.1			70.1	
Actuated g/C Ratio		0.22			0.22			0.68			0.68	
v/c Ratio		0.90			0.28			0.35			0.57	
Control Delay		57.1			32.4			8.3			11.0	
Queue Delay		0.0			0.0			0.0			0.0	
Total Delay		57.1			32.4			8.3			11.0	
LOS		E			C			A			B	
Approach Delay		57.1			32.4			8.3			11.0	
Approach LOS		E			C			A			B	

Intersection Summary

Area Type: Other
Cycle Length: 105
Actuated Cycle Length: 102.8
Natural Cycle: 60
Control Type: Actuated-Uncoordinated
Maximum v/c Ratio: 0.90
Intersection Signal Delay: 22.8 Intersection LOS: C
Intersection Capacity Utilization 69.9% ICU Level of Service C
Analysis Period (min) 15

Splits and Phases: 8: White St & United St

Lane Group	EBL	EBT	EBR	WBL	WBT	WBR	NBL	NBT	NBR	SBL	SBT	SBR
Lane Configurations												
Volume (vph)	12	218	67	14	153	210	7	113	6	363	356	12
Ideal Flow (vphpl)	1900	1900	1900	1900	1900	1900	1900	1900	1900	1900	1900	1900
Lane Util. Factor	1.00	1.00	1.00	1.00	1.00	1.00	1.00	1.00	1.00	1.00	1.00	1.00
Frt			0.850			0.850		0.994			0.998	
Flt Protected		0.997			0.996			0.997			0.976	
Satd. Flow (prot)	0	1894	1615	0	1892	1599	0	1865	0	0	1833	0
Flt Permitted		0.978			0.930			0.969			0.775	
Satd. Flow (perm)	0	1858	1615	0	1767	1599	0	1813	0	0	1455	0
Right Turn on Red			Yes			Yes			Yes			Yes
Satd. Flow (RTOR)			71			223		4			1	
Link Speed (mph)		30			30			30			30	
Link Distance (ft)		214			197			162			162	
Travel Time (s)		4.9			4.5			3.7			3.7	
Peak Hour Factor	0.94	0.94	0.94	0.94	0.94	0.94	0.94	0.94	0.94	0.94	0.94	0.94
Heavy Vehicles (%)	0%	0%	0%	0%	0%	1%	0%	1%	1%	1%	1%	0%
Adj. Flow (vph)	13	232	71	15	163	223	7	120	6	386	379	13
Shared Lane Traffic (%)												
Lane Group Flow (vph)	0	245	71	0	178	223	0	133	0	0	778	0
Enter Blocked Intersection	No	No	No	No	No	No	No	No	No	No	No	No
Lane Alignment	Left	Left	Right	Left	Left	Right	Left	Left	Right	Left	Left	Right
Median Width(ft)		0			0			0			0	
Link Offset(ft)		0			0			0			0	
Crosswalk Width(ft)		16			16			16			16	
Two way Left Turn Lane												
Headway Factor	1.00	1.00	1.00	1.00	1.00	1.00	1.00	1.00	1.00	1.00	1.00	1.00
Turning Speed (mph)	15		9	15		9	15		9	15		9
Number of Detectors	1	2	1	1	2	1	1	2		1	2	
Detector Template	Left	Thru	Right	Left	Thru	Right	Left	Thru		Left	Thru	
Leading Detector (ft)	20	100	20	20	100	20	20	100		20	100	
Trailing Detector (ft)	0	0	0	0	0	0	0	0		0	0	
Detector 1 Position(ft)	0	0	0	0	0	0	0	0		0	0	
Detector 1 Size(ft)	20	6	20	20	6	20	20	6		20	6	
Detector 1 Type	Cl+Ex	Cl+Ex	Cl+Ex	Cl+Ex	Cl+Ex	Cl+Ex	Cl+Ex	Cl+Ex		Cl+Ex	Cl+Ex	
Detector 1 Channel												
Detector 1 Extend (s)	0.0	0.0	0.0	0.0	0.0	0.0	0.0	0.0		0.0	0.0	
Detector 1 Queue (s)	0.0	0.0	0.0	0.0	0.0	0.0	0.0	0.0		0.0	0.0	
Detector 1 Delay (s)	0.0	0.0	0.0	0.0	0.0	0.0	0.0	0.0		0.0	0.0	
Detector 2 Position(ft)		94			94			94			94	
Detector 2 Size(ft)		6			6			6			6	
Detector 2 Type		Cl+Ex			Cl+Ex			Cl+Ex			Cl+Ex	
Detector 2 Channel												
Detector 2 Extend (s)		0.0			0.0			0.0			0.0	
Turn Type	Perm	NA	Perm	Perm	NA	Perm	Perm	NA		Perm	NA	
Protected Phases		4			8			2			6	
Permitted Phases	4		4	8		8	2			6		
Detector Phase	4	4	4	8	8	8	2	2		6	6	
Switch Phase												
Minimum Initial (s)	4.0	4.0	4.0	4.0	4.0	4.0	4.0	4.0		4.0	4.0	

Lane Group	EBL	EBT	EBR	WBL	WBT	WBR	NBL	NBT	NBR	SBL	SBT	SBR
Minimum Split (s)	21.0	21.0	21.0	21.0	21.0	21.0	21.0	21.0		21.0	21.0	
Total Split (s)	40.0	40.0	40.0	40.0	40.0	40.0	65.0	65.0		65.0	65.0	
Total Split (%)	38.1%	38.1%	38.1%	38.1%	38.1%	38.1%	61.9%	61.9%		61.9%	61.9%	
Maximum Green (s)	35.0	35.0	35.0	35.0	35.0	35.0	60.0	60.0		60.0	60.0	
Yellow Time (s)	4.0	4.0	4.0	4.0	4.0	4.0	4.0	4.0		4.0	4.0	
All-Red Time (s)	1.0	1.0	1.0	1.0	1.0	1.0	1.0	1.0		1.0	1.0	
Lost Time Adjust (s)		0.0	0.0		0.0	0.0		0.0			0.0	
Total Lost Time (s)		5.0	5.0		5.0	5.0		5.0			5.0	
Lead/Lag												
Lead-Lag Optimize?												
Vehicle Extension (s)	3.0	3.0	3.0	3.0	3.0	3.0	3.0	3.0		3.0	3.0	
Recall Mode	None	None	None	None	None	None	Max	Max		Max	Max	
Walk Time (s)	5.0	5.0	5.0	5.0	5.0	5.0	5.0	5.0		5.0	5.0	
Flash Dont Walk (s)	11.0	11.0	11.0	11.0	11.0	11.0	11.0	11.0		11.0	11.0	
Pedestrian Calls (#/hr)	0	0	0	0	0	0	0	0		0	0	
Act Effct Green (s)		16.6	16.6		16.6	16.6		60.2			60.2	
Actuated g/C Ratio		0.19	0.19		0.19	0.19		0.69			0.69	
v/c Ratio		0.69	0.19		0.53	0.46		0.11			0.77	
Control Delay		43.1	8.6		37.2	7.5		5.3			16.9	
Queue Delay		0.0	0.0		0.0	0.0		0.0			0.0	
Total Delay		43.1	8.6		37.2	7.5		5.3			16.9	
LOS		D	A		D	A		A			B	
Approach Delay		35.3			20.6			5.3			16.9	
Approach LOS		D			C			A			B	

Intersection Summary

Area Type: Other
Cycle Length: 105
Actuated Cycle Length: 86.8
Natural Cycle: 65
Control Type: Actuated-Uncoordinated
Maximum v/c Ratio: 0.77
Intersection Signal Delay: 20.5 Intersection LOS: C
Intersection Capacity Utilization 75.8% ICU Level of Service D
Analysis Period (min) 15

Splits and Phases: 23: White St & Flagler Ave

HCM Unsignalized Intersection Capacity Analysis
13: White St & Seminary St

10/30/2013

Movement	EBL	EBT	EBR	WBL	WBT	WBR	NBL	NBT	NBR	SBL	SBT	SBR
Lane Configurations												
Volume (veh/h)	7	6	9	5	4	18	20	361	4	23	808	13
Sign Control		Stop			Stop			Free			Free	
Grade		0%			0%			0%			0%	
Peak Hour Factor	0.89	0.89	0.89	0.89	0.89	0.89	0.89	0.89	0.89	0.89	0.89	0.89
Hourly flow rate (vph)	8	7	10	6	4	20	22	406	4	26	908	15
Pedestrians												
Lane Width (ft)												
Walking Speed (ft/s)												
Percent Blockage												
Right turn flare (veh)												
Median type								None			None	
Median storage veh)												
Upstream signal (ft)												
pX, platoon unblocked												
vC, conflicting volume	1442	1422	915	1433	1427	408	922			410		
vC1, stage 1 conf vol												
vC2, stage 2 conf vol												
vCu, unblocked vol	1442	1422	915	1433	1427	408	922			410		
tC, single (s)	7.1	6.5	6.2	7.1	6.5	6.2	4.1			4.1		
tC, 2 stage (s)												
tF (s)	3.5	4.0	3.3	3.5	4.0	3.3	2.2			2.2		
p0 queue free %	92	95	97	94	97	97	97			98		
cM capacity (veh/h)	101	130	333	101	129	648	749			1160		

Direction, Lane #	EB 1	WB 1	NB 1	SB 1
Volume Total	25	30	433	948
Volume Left	8	6	22	26
Volume Right	10	20	4	15
cSH	154	250	749	1160
Volume to Capacity	0.16	0.12	0.03	0.02
Queue Length 95th (ft)	14	10	2	2
Control Delay (s)	32.7	21.4	0.9	0.6
Lane LOS	D	C	A	A
Approach Delay (s)	32.7	21.4	0.9	0.6
Approach LOS	D	C		

Intersection Summary			
Average Delay	1.7		
Intersection Capacity Utilization	60.7%	ICU Level of Service	B
Analysis Period (min)	15		

HCM Unsignalized Intersection Capacity Analysis
18: White St & South St

10/30/2013

Movement	EBL	EBT	EBR	WBL	WBT	WBR	NBL	NBT	NBR	SBL	SBT	SBR
Lane Configurations												
Volume (veh/h)	16	20	74	2	2	9	22	336	6	26	604	11
Sign Control		Stop			Stop			Free			Free	
Grade		0%			0%			0%			0%	
Peak Hour Factor	0.90	0.90	0.90	0.90	0.90	0.90	0.90	0.90	0.90	0.90	0.90	0.90
Hourly flow rate (vph)	18	22	82	2	2	10	24	373	7	29	671	12
Pedestrians												
Lane Width (ft)												
Walking Speed (ft/s)												
Percent Blockage												
Right turn flare (veh)												
Median type								None			None	
Median storage veh)												
Upstream signal (ft)												
pX, platoon unblocked												
vC, conflicting volume	1172	1164	677	1254	1167	377	683			380		
vC1, stage 1 conf vol												
vC2, stage 2 conf vol												
vCu, unblocked vol	1172	1164	677	1254	1167	377	683			380		
tC, single (s)	7.1	6.5	6.2	7.1	6.5	6.2	4.1			4.1		
tC, 2 stage (s)												
tF (s)	3.5	4.0	3.3	3.5	4.0	3.3	2.2			2.2		
p0 queue free %	89	88	82	98	99	99	97			98		
cM capacity (veh/h)	160	186	456	108	186	674	919			1190		

Direction, Lane #	EB 1	WB 1	NB 1	SB 1
Volume Total	122	14	404	712
Volume Left	18	2	24	29
Volume Right	82	10	7	12
cSH	298	304	919	1190
Volume to Capacity	0.41	0.05	0.03	0.02
Queue Length 95th (ft)	48	4	2	2
Control Delay (s)	25.2	17.4	0.8	0.6
Lane LOS	D	C	A	A
Approach Delay (s)	25.2	17.4	0.8	0.6
Approach LOS	D	C		

Intersection Summary			
Average Delay	3.3		
Intersection Capacity Utilization	55.4%	ICU Level of Service	B
Analysis Period (min)	15		

HCM Unsignalized Intersection Capacity Analysis
28: Grinnell St & United St

10/30/2013

Movement	EBL	EBT	EBR	WBL	WBT	WBR	NBL	NBT	NBR	SBL	SBT	SBR
Lane Configurations												
Volume (veh/h)	13	350	30	22	146	2	12	20	5	2	14	5
Sign Control		Free			Free			Stop			Stop	
Grade		0%			0%			0%			0%	
Peak Hour Factor	0.90	0.90	0.90	0.90	0.90	0.90	0.90	0.90	0.90	0.90	0.90	0.90
Hourly flow rate (vph)	14	389	33	24	162	2	13	22	6	2	16	6
Pedestrians												
Lane Width (ft)												
Walking Speed (ft/s)												
Percent Blockage												
Right turn flare (veh)												
Median type		None			None							
Median storage veh)												
Upstream signal (ft)												
pX, platoon unblocked												
vC, conflicting volume	164			422			660	648	406	663	663	163
vC1, stage 1 conf vol												
vC2, stage 2 conf vol												
vCu, unblocked vol	164			422			660	648	406	663	663	163
tC, single (s)	4.1			4.1			7.1	6.5	6.2	7.1	6.5	6.2
tC, 2 stage (s)												
tF (s)	2.2			2.2			3.5	4.0	3.3	3.5	4.0	3.3
p0 queue free %	99			98			96	94	99	99	96	99
cM capacity (veh/h)	1426			1148			356	380	650	349	372	887

Direction, Lane #	EB 1	WB 1	NB 1	SB 1
Volume Total	437	189	41	23
Volume Left	14	24	13	2
Volume Right	33	2	6	6
cSH	1426	1148	393	429
Volume to Capacity	0.01	0.02	0.10	0.05
Queue Length 95th (ft)	1	2	9	4
Control Delay (s)	0.3	1.2	15.2	13.9
Lane LOS	A	A	C	B
Approach Delay (s)	0.3	1.2	15.2	13.9
Approach LOS			C	B

Intersection Summary			
Average Delay	1.9		
Intersection Capacity Utilization	33.9%	ICU Level of Service	A
Analysis Period (min)	15		

HCM Unsignalized Intersection Capacity Analysis
33: Grinnell St & Seminary St

10/30/2013

Movement	EBL	EBT	EBR	WBL	WBT	WBR	NBL	NBT	NBR	SBL	SBT	SBR
Lane Configurations												
Sign Control		Stop			Stop			Stop			Stop	
Volume (vph)	6	5	0	1	9	20	0	21	2	25	36	0
Peak Hour Factor	0.92	0.92	0.92	0.92	0.92	0.92	0.92	0.92	0.92	0.92	0.92	0.92
Hourly flow rate (vph)	7	5	0	1	10	22	0	23	2	27	39	0

Direction, Lane #	EB 1	WB 1	NB 1	SB 1
Volume Total (vph)	12	33	25	66
Volume Left (vph)	7	1	0	27
Volume Right (vph)	0	22	2	0
Hadj (s)	0.11	-0.39	-0.05	0.08
Departure Headway (s)	4.2	3.7	4.0	4.1
Degree Utilization, x	0.01	0.03	0.03	0.08
Capacity (veh/h)	826	941	875	864
Control Delay (s)	7.3	6.8	7.1	7.4
Approach Delay (s)	7.3	6.8	7.1	7.4
Approach LOS	A	A	A	A

Intersection Summary			
Delay	7.2		
Level of Service	A		
Intersection Capacity Utilization	20.1%	ICU Level of Service	A
Analysis Period (min)	15		

Future (2016) Total (w/ Project Traffic)

Lane Group	EBL	EBT	EBR	WBL	WBT	WBR	NBL	NBT	NBR	SBL	SBT	SBR
Lane Configurations												
Volume (vph)	20	247	100	20	26	4	178	268	63	28	197	20
Ideal Flow (vphpl)	1900	1900	1900	1900	1900	1900	1900	1900	1900	1900	1900	1900
Lane Util. Factor	1.00	1.00	1.00	1.00	1.00	1.00	1.00	1.00	1.00	1.00	1.00	1.00
Frt			0.850		0.988			0.972			0.986	
Flt Protected		0.996			0.981		0.950			0.950		
Satd. Flow (prot)	0	1874	1599	0	1823	0	1787	1829	0	1787	1855	0
Flt Permitted		0.977			0.816		0.603			0.504		
Satd. Flow (perm)	0	1838	1599	0	1517	0	1134	1829	0	948	1855	0
Right Turn on Red			Yes			Yes			Yes			Yes
Satd. Flow (RTOR)			116		5			12			5	
Link Speed (mph)		30			30			30			30	
Link Distance (ft)		194			196			234			193	
Travel Time (s)		4.4			4.5			5.3			4.4	
Peak Hour Factor	0.86	0.86	0.86	0.86	0.86	0.86	0.86	0.86	0.86	0.86	0.86	0.86
Heavy Vehicles (%)	1%	1%	1%	1%	1%	1%	1%	1%	1%	1%	1%	1%
Adj. Flow (vph)	23	287	116	23	30	5	207	312	73	33	229	23
Shared Lane Traffic (%)												
Lane Group Flow (vph)	0	310	116	0	58	0	207	385	0	33	252	0
Enter Blocked Intersection	No	No	No	No	No	No	No	No	No	No	No	No
Lane Alignment	Left	Left	Right	Left	Left	Right	Left	Left	Right	Left	Left	Right
Median Width(ft)		0			0			12			12	
Link Offset(ft)		0			0			0			0	
Crosswalk Width(ft)		16			16			16			16	
Two way Left Turn Lane												
Headway Factor	1.00	1.00	1.00	1.00	1.00	1.00	1.00	1.00	1.00	1.00	1.00	1.00
Turning Speed (mph)	15		9	15		9	15		9	15		9
Number of Detectors	1	2	1	1	2		1	2		1	2	
Detector Template	Left	Thru	Right	Left	Thru		Left	Thru		Left	Thru	
Leading Detector (ft)	20	100	20	20	100		20	100		20	100	
Trailing Detector (ft)	0	0	0	0	0		0	0		0	0	
Detector 1 Position(ft)	0	0	0	0	0		0	0		0	0	
Detector 1 Size(ft)	20	6	20	20	6		20	6		20	6	
Detector 1 Type	Cl+Ex	Cl+Ex	Cl+Ex	Cl+Ex	Cl+Ex		Cl+Ex	Cl+Ex		Cl+Ex	Cl+Ex	
Detector 1 Channel												
Detector 1 Extend (s)	0.0	0.0	0.0	0.0	0.0		0.0	0.0		0.0	0.0	
Detector 1 Queue (s)	0.0	0.0	0.0	0.0	0.0		0.0	0.0		0.0	0.0	
Detector 1 Delay (s)	0.0	0.0	0.0	0.0	0.0		0.0	0.0		0.0	0.0	
Detector 2 Position(ft)		94			94			94			94	
Detector 2 Size(ft)		6			6			6			6	
Detector 2 Type		Cl+Ex			Cl+Ex			Cl+Ex			Cl+Ex	
Detector 2 Channel												
Detector 2 Extend (s)		0.0			0.0			0.0			0.0	
Turn Type	Perm	NA	Perm	Perm	NA		Perm	NA		Perm	NA	
Protected Phases		4			8			2			6	
Permitted Phases	4		4	8			2			6		
Detector Phase	4	4	4	8	8		2	2		6	6	
Switch Phase												
Minimum Initial (s)	4.0	4.0	4.0	4.0	4.0		4.0	4.0		4.0	4.0	

Lane Group	EBL	EBT	EBR	WBL	WBT	WBR	NBL	NBT	NBR	SBL	SBT	SBR
Minimum Split (s)	21.0	21.0	21.0	21.0	21.0		21.0	21.0		21.0	21.0	
Total Split (s)	65.0	65.0	65.0	65.0	65.0		40.0	40.0		40.0	40.0	
Total Split (%)	61.9%	61.9%	61.9%	61.9%	61.9%		38.1%	38.1%		38.1%	38.1%	
Maximum Green (s)	60.0	60.0	60.0	60.0	60.0		35.0	35.0		35.0	35.0	
Yellow Time (s)	4.0	4.0	4.0	4.0	4.0		4.0	4.0		4.0	4.0	
All-Red Time (s)	1.0	1.0	1.0	1.0	1.0		1.0	1.0		1.0	1.0	
Lost Time Adjust (s)		0.0	0.0		0.0		0.0	0.0		0.0	0.0	
Total Lost Time (s)		5.0	5.0		5.0		5.0	5.0		5.0	5.0	
Lead/Lag												
Lead-Lag Optimize?												
Vehicle Extension (s)	3.0	3.0	3.0	3.0	3.0		3.0	3.0		3.0	3.0	
Recall Mode	None	None	None	None	None		Max	Max		Max	Max	
Walk Time (s)	5.0	5.0	5.0	5.0	5.0		5.0	5.0		5.0	5.0	
Flash Dont Walk (s)	11.0	11.0	11.0	11.0	11.0		11.0	11.0		11.0	11.0	
Pedestrian Calls (#/hr)	0	0	0	0	0		0	0		0	0	
Act Effct Green (s)		15.6	15.6		15.6		35.1	35.1		35.1	35.1	
Actuated g/C Ratio		0.26	0.26		0.26		0.58	0.58		0.58	0.58	
v/c Ratio		0.66	0.23		0.15		0.32	0.36		0.06	0.23	
Control Delay		27.2	5.2		16.5		9.4	8.7		7.4	7.7	
Queue Delay		0.0	0.0		0.0		0.0	0.0		0.0	0.0	
Total Delay		27.2	5.2		16.5		9.4	8.7		7.4	7.7	
LOS		C	A		B		A	A		A	A	
Approach Delay		21.2			16.5			8.9			7.7	
Approach LOS		C			B			A			A	

Intersection Summary

Area Type: Other
Cycle Length: 105
Actuated Cycle Length: 60.8
Natural Cycle: 45
Control Type: Actuated-Uncoordinated
Maximum v/c Ratio: 0.66
Intersection Signal Delay: 12.8 Intersection LOS: B
Intersection Capacity Utilization 53.6% ICU Level of Service A
Analysis Period (min) 15

Splits and Phases: 3: White St & Truman Ave

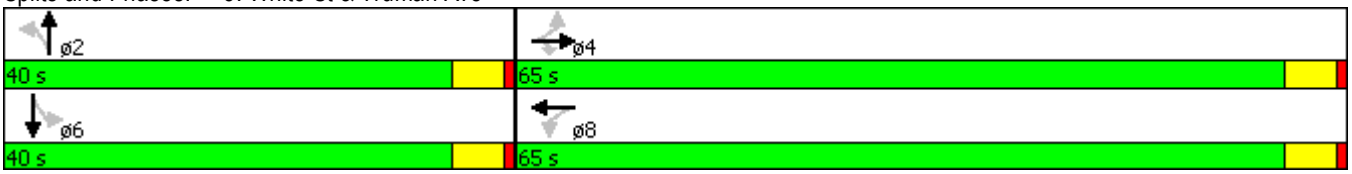

Lane Group	EBL	EBT	EBR	WBL	WBT	WBR	NBL	NBT	NBR	SBL	SBT	SBR
Lane Configurations												
Volume (vph)	22	50	107	7	53	19	95	319	8	21	321	57
Ideal Flow (vphpl)	1900	1900	1900	1900	1900	1900	1900	1900	1900	1900	1900	1900
Lane Util. Factor	1.00	1.00	1.00	1.00	1.00	1.00	1.00	1.00	1.00	1.00	1.00	1.00
Frt		0.919			0.967			0.997			0.981	
Flt Protected		0.994			0.995			0.989			0.997	
Satd. Flow (prot)	0	1736	0	0	1828	0	0	1859	0	0	1843	0
Flt Permitted		0.960			0.935			0.820			0.968	
Satd. Flow (perm)	0	1676	0	0	1718	0	0	1542	0	0	1790	0
Right Turn on Red			Yes			Yes			Yes			Yes
Satd. Flow (RTOR)		67			14			2			17	
Link Speed (mph)		30			30			30			30	
Link Distance (ft)		223			217			206			174	
Travel Time (s)		5.1			4.9			4.7			4.0	
Peak Hour Factor	0.91	0.91	0.91	0.91	0.91	0.91	0.91	0.91	0.91	0.91	0.91	0.91
Heavy Vehicles (%)	0%	0%	0%	0%	0%	0%	0%	1%	0%	0%	1%	0%
Adj. Flow (vph)	24	55	118	8	58	21	104	351	9	23	353	63
Shared Lane Traffic (%)												
Lane Group Flow (vph)	0	197	0	0	87	0	0	464	0	0	439	0
Enter Blocked Intersection	No	No	No	No	No	No	No	No	No	No	No	No
Lane Alignment	Left	Left	Right	Left	Left	Right	Left	Left	Right	Left	Left	Right
Median Width(ft)		0			0			0			0	
Link Offset(ft)		0			0			0			0	
Crosswalk Width(ft)		16			16			16			16	
Two way Left Turn Lane												
Headway Factor	1.00	1.00	1.00	1.00	1.00	1.00	1.00	1.00	1.00	1.00	1.00	1.00
Turning Speed (mph)	15		9	15		9	15		9	15		9
Number of Detectors	1	2		1	2		1	2		1	2	
Detector Template	Left	Thru		Left	Thru		Left	Thru		Left	Thru	
Leading Detector (ft)	20	100		20	100		20	100		20	100	
Trailing Detector (ft)	0	0		0	0		0	0		0	0	
Detector 1 Position(ft)	0	0		0	0		0	0		0	0	
Detector 1 Size(ft)	20	6		20	6		20	6		20	6	
Detector 1 Type	Cl+Ex	Cl+Ex		Cl+Ex	Cl+Ex		Cl+Ex	Cl+Ex		Cl+Ex	Cl+Ex	
Detector 1 Channel												
Detector 1 Extend (s)	0.0	0.0		0.0	0.0		0.0	0.0		0.0	0.0	
Detector 1 Queue (s)	0.0	0.0		0.0	0.0		0.0	0.0		0.0	0.0	
Detector 1 Delay (s)	0.0	0.0		0.0	0.0		0.0	0.0		0.0	0.0	
Detector 2 Position(ft)		94			94			94			94	
Detector 2 Size(ft)		6			6			6			6	
Detector 2 Type		Cl+Ex			Cl+Ex			Cl+Ex			Cl+Ex	
Detector 2 Channel												
Detector 2 Extend (s)		0.0			0.0			0.0			0.0	
Turn Type	Perm	NA		Perm	NA		Perm	NA		Perm	NA	
Protected Phases		4			8			2			6	
Permitted Phases	4			8			2			6		
Detector Phase	4	4		8	8		2	2		6	6	
Switch Phase												
Minimum Initial (s)	4.0	4.0		4.0	4.0		4.0	4.0		4.0	4.0	

Lane Group	EBL	EBT	EBR	WBL	WBT	WBR	NBL	NBT	NBR	SBL	SBT	SBR
Minimum Split (s)	21.0	21.0		21.0	21.0		21.0	21.0		21.0	21.0	
Total Split (s)	30.0	30.0		30.0	30.0		75.0	75.0		75.0	75.0	
Total Split (%)	28.6%	28.6%		28.6%	28.6%		71.4%	71.4%		71.4%	71.4%	
Maximum Green (s)	25.0	25.0		25.0	25.0		70.0	70.0		70.0	70.0	
Yellow Time (s)	4.0	4.0		4.0	4.0		4.0	4.0		4.0	4.0	
All-Red Time (s)	1.0	1.0		1.0	1.0		1.0	1.0		1.0	1.0	
Lost Time Adjust (s)		0.0			0.0			0.0			0.0	
Total Lost Time (s)		5.0			5.0			5.0			5.0	
Lead/Lag												
Lead-Lag Optimize?												
Vehicle Extension (s)	3.0	3.0		3.0	3.0		3.0	3.0		3.0	3.0	
Recall Mode	None	None		None	None		Max	Max		Max	Max	
Walk Time (s)	5.0	5.0		5.0	5.0		5.0	5.0		5.0	5.0	
Flash Dont Walk (s)	11.0	11.0		11.0	11.0		11.0	11.0		11.0	11.0	
Pedestrian Calls (#/hr)	0	0		0	0		0	0		0	0	
Act Effct Green (s)		12.9			12.9			72.1			72.1	
Actuated g/C Ratio		0.14			0.14			0.76			0.76	
v/c Ratio		0.69			0.36			0.40			0.32	
Control Delay		37.8			33.8			5.7			4.8	
Queue Delay		0.0			0.0			0.0			0.0	
Total Delay		37.8			33.8			5.7			4.8	
LOS		D			C			A			A	
Approach Delay		37.8			33.8			5.7			4.8	
Approach LOS		D			C			A			A	

Intersection Summary

Area Type: Other
Cycle Length: 105
Actuated Cycle Length: 95
Natural Cycle: 45
Control Type: Actuated-Uncoordinated
Maximum v/c Ratio: 0.69
Intersection Signal Delay: 12.8 Intersection LOS: B
Intersection Capacity Utilization 71.7% ICU Level of Service C
Analysis Period (min) 15

Splits and Phases: 8: White St & United St

Lane Group	EBL	EBT	EBR	WBL	WBT	WBR	NBL	NBT	NBR	SBL	SBT	SBR
Lane Configurations												
Volume (vph)	5	72	12	15	159	243	11	142	13	241	168	2
Ideal Flow (vphpl)	1900	1900	1900	1900	1900	1900	1900	1900	1900	1900	1900	1900
Lane Util. Factor	1.00	1.00	1.00	1.00	1.00	1.00	1.00	1.00	1.00	1.00	1.00	1.00
Frt			0.850			0.850		0.989			0.999	
Flt Protected		0.997			0.996			0.997			0.971	
Satd. Flow (prot)	0	1894	1615	0	1892	1599	0	1856	0	0	1825	0
Flt Permitted		0.976			0.969			0.968			0.709	
Satd. Flow (perm)	0	1854	1615	0	1841	1599	0	1802	0	0	1332	0
Right Turn on Red			Yes			Yes			Yes			Yes
Satd. Flow (RTOR)			21			293		7				
Link Speed (mph)		30			30			30			30	
Link Distance (ft)		214			197			162			162	
Travel Time (s)		4.9			4.5			3.7			3.7	
Peak Hour Factor	0.83	0.83	0.83	0.83	0.83	0.83	0.83	0.83	0.83	0.83	0.83	0.83
Heavy Vehicles (%)	0%	0%	0%	0%	0%	1%	0%	1%	1%	1%	1%	0%
Adj. Flow (vph)	6	87	14	18	192	293	13	171	16	290	202	2
Shared Lane Traffic (%)												
Lane Group Flow (vph)	0	93	14	0	210	293	0	200	0	0	494	0
Enter Blocked Intersection	No	No	No	No	No	No	No	No	No	No	No	No
Lane Alignment	Left	Left	Right	Left	Left	Right	Left	Left	Right	Left	Left	Right
Median Width(ft)		0			0			0			0	
Link Offset(ft)		0			0			0			0	
Crosswalk Width(ft)		16			16			16			16	
Two way Left Turn Lane												
Headway Factor	1.00	1.00	1.00	1.00	1.00	1.00	1.00	1.00	1.00	1.00	1.00	1.00
Turning Speed (mph)	15		9	15		9	15		9	15		9
Number of Detectors	1	2	1	1	2	1	1	2		1	2	
Detector Template	Left	Thru	Right	Left	Thru	Right	Left	Thru		Left	Thru	
Leading Detector (ft)	20	100	20	20	100	20	20	100		20	100	
Trailing Detector (ft)	0	0	0	0	0	0	0	0		0	0	
Detector 1 Position(ft)	0	0	0	0	0	0	0	0		0	0	
Detector 1 Size(ft)	20	6	20	20	6	20	20	6		20	6	
Detector 1 Type	Cl+Ex	Cl+Ex	Cl+Ex	Cl+Ex	Cl+Ex	Cl+Ex	Cl+Ex	Cl+Ex		Cl+Ex	Cl+Ex	
Detector 1 Channel												
Detector 1 Extend (s)	0.0	0.0	0.0	0.0	0.0	0.0	0.0	0.0		0.0	0.0	
Detector 1 Queue (s)	0.0	0.0	0.0	0.0	0.0	0.0	0.0	0.0		0.0	0.0	
Detector 1 Delay (s)	0.0	0.0	0.0	0.0	0.0	0.0	0.0	0.0		0.0	0.0	
Detector 2 Position(ft)		94			94			94			94	
Detector 2 Size(ft)		6			6			6			6	
Detector 2 Type		Cl+Ex			Cl+Ex			Cl+Ex			Cl+Ex	
Detector 2 Channel												
Detector 2 Extend (s)		0.0			0.0			0.0			0.0	
Turn Type	Perm	NA	Perm	Perm	NA	Perm	Perm	NA		Perm	NA	
Protected Phases		4			8			2			6	
Permitted Phases	4		4	8		8	2			6		
Detector Phase	4	4	4	8	8	8	2	2		6	6	
Switch Phase												
Minimum Initial (s)	4.0	4.0	4.0	4.0	4.0	4.0	4.0	4.0		4.0	4.0	

Lane Group	EBL	EBT	EBR	WBL	WBT	WBR	NBL	NBT	NBR	SBL	SBT	SBR
Minimum Split (s)	21.0	21.0	21.0	21.0	21.0	21.0	21.0	21.0		21.0	21.0	
Total Split (s)	40.0	40.0	40.0	40.0	40.0	40.0	65.0	65.0		65.0	65.0	
Total Split (%)	38.1%	38.1%	38.1%	38.1%	38.1%	38.1%	61.9%	61.9%		61.9%	61.9%	
Maximum Green (s)	35.0	35.0	35.0	35.0	35.0	35.0	60.0	60.0		60.0	60.0	
Yellow Time (s)	4.0	4.0	4.0	4.0	4.0	4.0	4.0	4.0		4.0	4.0	
All-Red Time (s)	1.0	1.0	1.0	1.0	1.0	1.0	1.0	1.0		1.0	1.0	
Lost Time Adjust (s)		0.0	0.0		0.0	0.0		0.0			0.0	
Total Lost Time (s)		5.0	5.0		5.0	5.0		5.0			5.0	
Lead/Lag												
Lead-Lag Optimize?												
Vehicle Extension (s)	3.0	3.0	3.0	3.0	3.0	3.0	3.0	3.0		3.0	3.0	
Recall Mode	None	None	None	None	None	None	Max	Max		Max	Max	
Walk Time (s)	5.0	5.0	5.0	5.0	5.0	5.0	5.0	5.0		5.0	5.0	
Flash Dont Walk (s)	11.0	11.0	11.0	11.0	11.0	11.0	11.0	11.0		11.0	11.0	
Pedestrian Calls (#/hr)	0	0	0	0	0	0	0	0		0	0	
Act Effct Green (s)		15.5	15.5		15.5	15.5		60.2			60.2	
Actuated g/C Ratio		0.18	0.18		0.18	0.18		0.70			0.70	
v/c Ratio		0.28	0.05		0.63	0.55		0.16			0.53	
Control Delay		31.8	9.4		41.1	8.1		5.1			9.5	
Queue Delay		0.0	0.0		0.0	0.0		0.0			0.0	
Total Delay		31.8	9.4		41.1	8.1		5.1			9.5	
LOS		C	A		D	A		A			A	
Approach Delay		28.9			21.9			5.1			9.5	
Approach LOS		C			C			A			A	

Intersection Summary

Area Type: Other
Cycle Length: 105
Actuated Cycle Length: 85.7
Natural Cycle: 55
Control Type: Actuated-Uncoordinated
Maximum v/c Ratio: 0.63
Intersection Signal Delay: 15.2 Intersection LOS: B
Intersection Capacity Utilization 59.5% ICU Level of Service B
Analysis Period (min) 15

Splits and Phases: 23: White St & Flagler Ave

HCM Unsignalized Intersection Capacity Analysis
13: White St & Seminary St

10/30/2013

Movement	EBL	EBT	EBR	WBL	WBT	WBR	NBL	NBT	NBR	SBL	SBT	SBR
Lane Configurations												
Volume (veh/h)	2	1	7	4	11	32	37	383	4	13	396	15
Sign Control		Stop			Stop			Free			Free	
Grade		0%			0%			0%			0%	
Peak Hour Factor	0.91	0.91	0.91	0.91	0.91	0.91	0.91	0.91	0.91	0.91	0.91	0.91
Hourly flow rate (vph)	2	1	8	4	12	35	41	421	4	14	435	16
Pedestrians												
Lane Width (ft)												
Walking Speed (ft/s)												
Percent Blockage												
Right turn flare (veh)												
Median type								None			None	
Median storage veh)												
Upstream signal (ft)												
pX, platoon unblocked												
vC, conflicting volume	1018	979	443	985	985	423	452			425		
vC1, stage 1 conf vol												
vC2, stage 2 conf vol												
vCu, unblocked vol	1018	979	443	985	985	423	452			425		
tC, single (s)	7.1	6.5	6.2	7.1	6.5	6.2	4.1			4.1		
tC, 2 stage (s)												
tF (s)	3.5	4.0	3.3	3.5	4.0	3.3	2.2			2.2		
p0 queue free %	99	100	99	98	95	94	96			99		
cM capacity (veh/h)	190	240	619	217	238	635	1120			1145		

Direction, Lane #	EB 1	WB 1	NB 1	SB 1
Volume Total	11	52	466	466
Volume Left	2	4	41	14
Volume Right	8	35	4	16
cSH	385	409	1120	1145
Volume to Capacity	0.03	0.13	0.04	0.01
Queue Length 95th (ft)	2	11	3	1
Control Delay (s)	14.6	15.1	1.1	0.4
Lane LOS	B	C	A	A
Approach Delay (s)	14.6	15.1	1.1	0.4
Approach LOS	B	C		

Intersection Summary			
Average Delay	1.6		
Intersection Capacity Utilization	47.1%	ICU Level of Service	A
Analysis Period (min)	15		

HCM Unsignalized Intersection Capacity Analysis
18: White St & South St

10/30/2013

Movement	EBL	EBT	EBR	WBL	WBT	WBR	NBL	NBT	NBR	SBL	SBT	SBR
Lane Configurations												
Volume (veh/h)	15	11	45	4	11	14	27	414	5	12	346	12
Sign Control		Stop			Stop			Free			Free	
Grade		0%			0%			0%			0%	
Peak Hour Factor	0.90	0.90	0.90	0.90	0.90	0.90	0.90	0.90	0.90	0.90	0.90	0.90
Hourly flow rate (vph)	17	12	50	4	12	16	30	460	6	13	384	13
Pedestrians												
Lane Width (ft)												
Walking Speed (ft/s)												
Percent Blockage												
Right turn flare (veh)												
Median type								None			None	
Median storage veh)												
Upstream signal (ft)												
pX, platoon unblocked												
vC, conflicting volume	962	943	391	997	947	463	398			466		
vC1, stage 1 conf vol												
vC2, stage 2 conf vol												
vCu, unblocked vol	962	943	391	997	947	463	398			466		
tC, single (s)	7.1	6.5	6.2	7.1	6.5	6.2	4.1			4.1		
tC, 2 stage (s)												
tF (s)	3.5	4.0	3.3	3.5	4.0	3.3	2.2			2.2		
p0 queue free %	92	95	92	98	95	97	97			99		
cM capacity (veh/h)	216	255	662	195	253	603	1172			1106		

Direction, Lane #	EB 1	WB 1	NB 1	SB 1
Volume Total	79	32	496	411
Volume Left	17	4	30	13
Volume Right	50	16	6	13
cSH	393	333	1172	1106
Volume to Capacity	0.20	0.10	0.03	0.01
Queue Length 95th (ft)	18	8	2	1
Control Delay (s)	16.4	17.0	0.8	0.4
Lane LOS	C	C	A	A
Approach Delay (s)	16.4	17.0	0.8	0.4
Approach LOS	C	C		

Intersection Summary			
Average Delay	2.3		
Intersection Capacity Utilization	46.9%	ICU Level of Service	A
Analysis Period (min)	15		

HCM Unsignalized Intersection Capacity Analysis
28: Grinnell St & United St

10/30/2013

Movement	EBL	EBT	EBR	WBL	WBT	WBR	NBL	NBT	NBR	SBL	SBT	SBR
Lane Configurations												
Volume (veh/h)	11	195	13	18	162	2	20	11	19	5	11	5
Sign Control		Free			Free			Stop			Stop	
Grade		0%			0%			0%			0%	
Peak Hour Factor	0.83	0.83	0.83	0.83	0.83	0.83	0.83	0.83	0.83	0.83	0.83	0.83
Hourly flow rate (vph)	13	235	16	22	195	2	24	13	23	6	13	6
Pedestrians												
Lane Width (ft)												
Walking Speed (ft/s)												
Percent Blockage												
Right turn flare (veh)												
Median type		None			None							
Median storage veh)												
Upstream signal (ft)												
pX, platoon unblocked												
vC, conflicting volume	198			251			522	510	243	539	517	196
vC1, stage 1 conf vol												
vC2, stage 2 conf vol												
vCu, unblocked vol	198			251			522	510	243	539	517	196
tC, single (s)	4.1			4.1			7.1	6.5	6.2	7.1	6.5	6.2
tC, 2 stage (s)												
tF (s)	2.2			2.2			3.5	4.0	3.3	3.5	4.0	3.3
p0 queue free %	99			98			95	97	97	99	97	99
cM capacity (veh/h)	1387			1327			446	457	801	425	453	850

Direction, Lane #	EB 1	WB 1	NB 1	SB 1
Volume Total	264	219	60	25
Volume Left	13	22	24	6
Volume Right	16	2	23	6
cSH	1387	1327	540	501
Volume to Capacity	0.01	0.02	0.11	0.05
Queue Length 95th (ft)	1	1	9	4
Control Delay (s)	0.5	0.9	12.5	12.6
Lane LOS	A	A	B	B
Approach Delay (s)	0.5	0.9	12.5	12.6
Approach LOS			B	B

Intersection Summary			
Average Delay	2.4		
Intersection Capacity Utilization	26.5%	ICU Level of Service	A
Analysis Period (min)	15		

HCM Unsignalized Intersection Capacity Analysis
33: Grinnell St & Seminary St

10/30/2013

Movement	EBL	EBT	EBR	WBL	WBT	WBR	NBL	NBT	NBR	SBL	SBT	SBR
Lane Configurations												
Sign Control		Stop			Stop			Stop			Stop	
Volume (vph)	0	12	0	1	7	26	0	28	1	13	26	1
Peak Hour Factor	0.70	0.70	0.70	0.70	0.70	0.70	0.70	0.70	0.70	0.70	0.70	0.70
Hourly flow rate (vph)	0	17	0	1	10	37	0	40	1	19	37	1

Direction, Lane #	EB 1	WB 1	NB 1	SB 1
Volume Total (vph)	17	49	41	57
Volume Left (vph)	0	1	0	19
Volume Right (vph)	0	37	1	1
Hadj (s)	0.00	-0.45	-0.02	0.05
Departure Headway (s)	4.2	3.7	4.1	4.1
Degree Utilization, x	0.02	0.05	0.05	0.07
Capacity (veh/h)	839	949	858	854
Control Delay (s)	7.2	6.9	7.3	7.4
Approach Delay (s)	7.2	6.9	7.3	7.4
Approach LOS	A	A	A	A

Intersection Summary			
Delay	7.2		
Level of Service	A		
Intersection Capacity Utilization	18.8%	ICU Level of Service	A
Analysis Period (min)	15		

Lanes, Volumes, Timings
3: White St & Truman Ave

10/30/2013

Lane Group	EBL	EBT	EBR	WBL	WBT	WBR	NBL	NBT	NBR	SBL	SBT	SBR
Lane Configurations												
Volume (vph)	28	530	161	19	28	4	166	172	57	82	398	19
Ideal Flow (vphpl)	1900	1900	1900	1900	1900	1900	1900	1900	1900	1900	1900	1900
Lane Util. Factor	1.00	1.00	1.00	1.00	1.00	1.00	1.00	1.00	1.00	1.00	1.00	1.00
Frt			0.850		0.990			0.963			0.993	
Flt Protected		0.998			0.982		0.950			0.950		
Satd. Flow (prot)	0	1877	1599	0	1829	0	1787	1812	0	1787	1868	0
Flt Permitted		0.986			0.700		0.361			0.568		
Satd. Flow (perm)	0	1855	1599	0	1304	0	679	1812	0	1069	1868	0
Right Turn on Red			Yes			Yes			Yes			Yes
Satd. Flow (RTOR)			179		4			17			2	
Link Speed (mph)		30			30			30			30	
Link Distance (ft)		194			196			234			193	
Travel Time (s)		4.4			4.5			5.3			4.4	
Peak Hour Factor	0.90	0.90	0.90	0.90	0.90	0.90	0.90	0.90	0.90	0.90	0.90	0.90
Heavy Vehicles (%)	1%	1%	1%	1%	1%	1%	1%	1%	1%	1%	1%	1%
Adj. Flow (vph)	31	589	179	21	31	4	184	191	63	91	442	21
Shared Lane Traffic (%)												
Lane Group Flow (vph)	0	620	179	0	56	0	184	254	0	91	463	0
Enter Blocked Intersection	No	No	No	No	No	No	No	No	No	No	No	No
Lane Alignment	Left	Left	Right	Left	Left	Right	Left	Left	Right	Left	Left	Right
Median Width(ft)		0			0			12			12	
Link Offset(ft)		0			0			0			0	
Crosswalk Width(ft)		16			16			16			16	
Two way Left Turn Lane												
Headway Factor	1.00	1.00	1.00	1.00	1.00	1.00	1.00	1.00	1.00	1.00	1.00	1.00
Turning Speed (mph)	15		9	15		9	15		9	15		9
Number of Detectors	1	2	1	1	2		1	2		1	2	
Detector Template	Left	Thru	Right	Left	Thru		Left	Thru		Left	Thru	
Leading Detector (ft)	20	100	20	20	100		20	100		20	100	
Trailing Detector (ft)	0	0	0	0	0		0	0		0	0	
Detector 1 Position(ft)	0	0	0	0	0		0	0		0	0	
Detector 1 Size(ft)	20	6	20	20	6		20	6		20	6	
Detector 1 Type	Cl+Ex	Cl+Ex	Cl+Ex	Cl+Ex	Cl+Ex		Cl+Ex	Cl+Ex		Cl+Ex	Cl+Ex	
Detector 1 Channel												
Detector 1 Extend (s)	0.0	0.0	0.0	0.0	0.0		0.0	0.0		0.0	0.0	
Detector 1 Queue (s)	0.0	0.0	0.0	0.0	0.0		0.0	0.0		0.0	0.0	
Detector 1 Delay (s)	0.0	0.0	0.0	0.0	0.0		0.0	0.0		0.0	0.0	
Detector 2 Position(ft)		94			94			94			94	
Detector 2 Size(ft)		6			6			6			6	
Detector 2 Type		Cl+Ex			Cl+Ex			Cl+Ex			Cl+Ex	
Detector 2 Channel												
Detector 2 Extend (s)		0.0			0.0			0.0			0.0	
Turn Type	Perm	NA	Perm	Perm	NA		Perm	NA		Perm	NA	
Protected Phases		4			8			2			6	
Permitted Phases	4		4	8			2			6		
Detector Phase	4	4	4	8	8		2	2		6	6	
Switch Phase												
Minimum Initial (s)	4.0	4.0	4.0	4.0	4.0		4.0	4.0		4.0	4.0	

Lane Group	EBL	EBT	EBR	WBL	WBT	WBR	NBL	NBT	NBR	SBL	SBT	SBR
Minimum Split (s)	21.0	21.0	21.0	21.0	21.0		21.0	21.0		21.0	21.0	
Total Split (s)	65.0	65.0	65.0	65.0	65.0		40.0	40.0		40.0	40.0	
Total Split (%)	61.9%	61.9%	61.9%	61.9%	61.9%		38.1%	38.1%		38.1%	38.1%	
Maximum Green (s)	60.0	60.0	60.0	60.0	60.0		35.0	35.0		35.0	35.0	
Yellow Time (s)	4.0	4.0	4.0	4.0	4.0		4.0	4.0		4.0	4.0	
All-Red Time (s)	1.0	1.0	1.0	1.0	1.0		1.0	1.0		1.0	1.0	
Lost Time Adjust (s)		0.0	0.0		0.0		0.0	0.0		0.0	0.0	
Total Lost Time (s)		5.0	5.0		5.0		5.0	5.0		5.0	5.0	
Lead/Lag												
Lead-Lag Optimize?												
Vehicle Extension (s)	3.0	3.0	3.0	3.0	3.0		3.0	3.0		3.0	3.0	
Recall Mode	None	None	None	None	None		Max	Max		Max	Max	
Walk Time (s)	5.0	5.0	5.0	5.0	5.0		5.0	5.0		5.0	5.0	
Flash Dont Walk (s)	11.0	11.0	11.0	11.0	11.0		11.0	11.0		11.0	11.0	
Pedestrian Calls (#/hr)	0	0	0	0	0		0	0		0	0	
Act Effct Green (s)		32.5	32.5		32.5		35.5	35.5		35.5	35.5	
Actuated g/C Ratio		0.42	0.42		0.42		0.45	0.45		0.45	0.45	
v/c Ratio		0.80	0.23		0.10		0.60	0.31		0.19	0.55	
Control Delay		28.3	2.8		12.5		29.7	15.9		17.2	20.6	
Queue Delay		0.0	0.0		0.0		0.0	0.0		0.0	0.0	
Total Delay		28.3	2.8		12.5		29.7	15.9		17.2	20.6	
LOS		C	A		B		C	B		B	C	
Approach Delay		22.6			12.5			21.7			20.0	
Approach LOS		C			B			C			C	

Intersection Summary

Area Type: Other
Cycle Length: 105
Actuated Cycle Length: 78.1
Natural Cycle: 50
Control Type: Actuated-Uncoordinated
Maximum v/c Ratio: 0.80
Intersection Signal Delay: 21.3 Intersection LOS: C
Intersection Capacity Utilization 73.7% ICU Level of Service D
Analysis Period (min) 15

Splits and Phases: 3: White St & Truman Ave

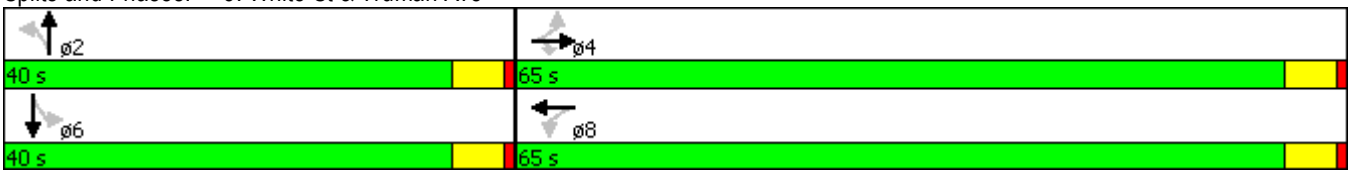

Lane Group	EBL	EBT	EBR	WBL	WBT	WBR	NBL	NBT	NBR	SBL	SBT	SBR
Lane Configurations												
Volume (vph)	40	150	218	19	51	12	48	332	5	34	587	53
Ideal Flow (vphpl)	1900	1900	1900	1900	1900	1900	1900	1900	1900	1900	1900	1900
Lane Util. Factor	1.00	1.00	1.00	1.00	1.00	1.00	1.00	1.00	1.00	1.00	1.00	1.00
Frt		0.928			0.980			0.998			0.989	
Flt Protected		0.995			0.989			0.994			0.997	
Satd. Flow (prot)	0	1754	0	0	1842	0	0	1869	0	0	1857	0
Flt Permitted		0.961			0.745			0.862			0.965	
Satd. Flow (perm)	0	1694	0	0	1387	0	0	1621	0	0	1798	0
Right Turn on Red			Yes			Yes			Yes			Yes
Satd. Flow (RTOR)		52			8			1			9	
Link Speed (mph)		30			30			30			30	
Link Distance (ft)		223			217			206			174	
Travel Time (s)		5.1			4.9			4.7			4.0	
Peak Hour Factor	0.95	0.95	0.95	0.95	0.95	0.95	0.95	0.95	0.95	0.95	0.95	0.95
Heavy Vehicles (%)	0%	0%	0%	0%	0%	0%	0%	1%	0%	0%	1%	0%
Adj. Flow (vph)	42	158	229	20	54	13	51	349	5	36	618	56
Shared Lane Traffic (%)												
Lane Group Flow (vph)	0	429	0	0	87	0	0	405	0	0	710	0
Enter Blocked Intersection	No	No	No	No	No	No	No	No	No	No	No	No
Lane Alignment	Left	Left	Right	Left	Left	Right	Left	Left	Right	Left	Left	Right
Median Width(ft)		0			0			0			0	
Link Offset(ft)		0			0			0			0	
Crosswalk Width(ft)		16			16			16			16	
Two way Left Turn Lane												
Headway Factor	1.00	1.00	1.00	1.00	1.00	1.00	1.00	1.00	1.00	1.00	1.00	1.00
Turning Speed (mph)	15		9	15		9	15		9	15		9
Number of Detectors	1	2		1	2		1	2		1	2	
Detector Template	Left	Thru		Left	Thru		Left	Thru		Left	Thru	
Leading Detector (ft)	20	100		20	100		20	100		20	100	
Trailing Detector (ft)	0	0		0	0		0	0		0	0	
Detector 1 Position(ft)	0	0		0	0		0	0		0	0	
Detector 1 Size(ft)	20	6		20	6		20	6		20	6	
Detector 1 Type	Cl+Ex	Cl+Ex		Cl+Ex	Cl+Ex		Cl+Ex	Cl+Ex		Cl+Ex	Cl+Ex	
Detector 1 Channel												
Detector 1 Extend (s)	0.0	0.0		0.0	0.0		0.0	0.0		0.0	0.0	
Detector 1 Queue (s)	0.0	0.0		0.0	0.0		0.0	0.0		0.0	0.0	
Detector 1 Delay (s)	0.0	0.0		0.0	0.0		0.0	0.0		0.0	0.0	
Detector 2 Position(ft)		94			94			94			94	
Detector 2 Size(ft)		6			6			6			6	
Detector 2 Type		Cl+Ex			Cl+Ex			Cl+Ex			Cl+Ex	
Detector 2 Channel												
Detector 2 Extend (s)		0.0			0.0			0.0			0.0	
Turn Type	Perm	NA		Perm	NA		Perm	NA		Perm	NA	
Protected Phases		4			8			2			6	
Permitted Phases	4			8			2			6		
Detector Phase	4	4		8	8		2	2		6	6	
Switch Phase												
Minimum Initial (s)	4.0	4.0		4.0	4.0		4.0	4.0		4.0	4.0	

Lane Group	EBL	EBT	EBR	WBL	WBT	WBR	NBL	NBT	NBR	SBL	SBT	SBR
Minimum Split (s)	21.0	21.0		21.0	21.0		21.0	21.0		21.0	21.0	
Total Split (s)	30.0	30.0		30.0	30.0		75.0	75.0		75.0	75.0	
Total Split (%)	28.6%	28.6%		28.6%	28.6%		71.4%	71.4%		71.4%	71.4%	
Maximum Green (s)	25.0	25.0		25.0	25.0		70.0	70.0		70.0	70.0	
Yellow Time (s)	4.0	4.0		4.0	4.0		4.0	4.0		4.0	4.0	
All-Red Time (s)	1.0	1.0		1.0	1.0		1.0	1.0		1.0	1.0	
Lost Time Adjust (s)		0.0			0.0			0.0			0.0	
Total Lost Time (s)		5.0			5.0			5.0			5.0	
Lead/Lag												
Lead-Lag Optimize?												
Vehicle Extension (s)	3.0	3.0		3.0	3.0		3.0	3.0		3.0	3.0	
Recall Mode	None	None		None	None		Max	Max		Max	Max	
Walk Time (s)	5.0	5.0		5.0	5.0		5.0	5.0		5.0	5.0	
Flash Dont Walk (s)	11.0	11.0		11.0	11.0		11.0	11.0		11.0	11.0	
Pedestrian Calls (#/hr)	0	0		0	0		0	0		0	0	
Act Effct Green (s)		25.0			25.0			70.0			70.0	
Actuated g/C Ratio		0.24			0.24			0.67			0.67	
v/c Ratio		0.97			0.26			0.37			0.59	
Control Delay		72.1			31.9			9.0			12.0	
Queue Delay		0.0			0.0			0.0			0.0	
Total Delay		72.1			31.9			9.0			12.0	
LOS		E			C			A			B	
Approach Delay		72.1			31.9			9.0			12.0	
Approach LOS		E			C			A			B	

Intersection Summary

Area Type: Other
Cycle Length: 105
Actuated Cycle Length: 105
Natural Cycle: 55
Control Type: Actuated-Uncoordinated
Maximum v/c Ratio: 0.97
Intersection Signal Delay: 28.1 Intersection LOS: C
Intersection Capacity Utilization 74.7% ICU Level of Service D
Analysis Period (min) 15

Splits and Phases: 8: White St & United St

Lane Group	EBL	EBT	EBR	WBL	WBT	WBR	NBL	NBT	NBR	SBL	SBT	SBR
Lane Configurations												
Volume (vph)	12	218	67	14	153	217	7	114	6	378	358	12
Ideal Flow (vphpl)	1900	1900	1900	1900	1900	1900	1900	1900	1900	1900	1900	1900
Lane Util. Factor	1.00	1.00	1.00	1.00	1.00	1.00	1.00	1.00	1.00	1.00	1.00	1.00
Frt			0.850			0.850		0.994			0.998	
Flt Protected		0.997			0.996			0.997			0.975	
Satd. Flow (prot)	0	1894	1615	0	1892	1599	0	1865	0	0	1831	0
Flt Permitted		0.978			0.930			0.968			0.772	
Satd. Flow (perm)	0	1858	1615	0	1767	1599	0	1811	0	0	1450	0
Right Turn on Red			Yes			Yes			Yes			Yes
Satd. Flow (RTOR)			71			231		4			1	
Link Speed (mph)		30			30			30			30	
Link Distance (ft)		214			197			162			162	
Travel Time (s)		4.9			4.5			3.7			3.7	
Peak Hour Factor	0.94	0.94	0.94	0.94	0.94	0.94	0.94	0.94	0.94	0.94	0.94	0.94
Heavy Vehicles (%)	0%	0%	0%	0%	0%	1%	0%	1%	1%	1%	1%	0%
Adj. Flow (vph)	13	232	71	15	163	231	7	121	6	402	381	13
Shared Lane Traffic (%)												
Lane Group Flow (vph)	0	245	71	0	178	231	0	134	0	0	796	0
Enter Blocked Intersection	No	No	No	No	No	No	No	No	No	No	No	No
Lane Alignment	Left	Left	Right	Left	Left	Right	Left	Left	Right	Left	Left	Right
Median Width(ft)		0			0			0			0	
Link Offset(ft)		0			0			0			0	
Crosswalk Width(ft)		16			16			16			16	
Two way Left Turn Lane												
Headway Factor	1.00	1.00	1.00	1.00	1.00	1.00	1.00	1.00	1.00	1.00	1.00	1.00
Turning Speed (mph)	15		9	15		9	15		9	15		9
Number of Detectors	1	2	1	1	2	1	1	2		1	2	
Detector Template	Left	Thru	Right	Left	Thru	Right	Left	Thru		Left	Thru	
Leading Detector (ft)	20	100	20	20	100	20	20	100		20	100	
Trailing Detector (ft)	0	0	0	0	0	0	0	0		0	0	
Detector 1 Position(ft)	0	0	0	0	0	0	0	0		0	0	
Detector 1 Size(ft)	20	6	20	20	6	20	20	6		20	6	
Detector 1 Type	Cl+Ex	Cl+Ex	Cl+Ex	Cl+Ex	Cl+Ex	Cl+Ex	Cl+Ex	Cl+Ex		Cl+Ex	Cl+Ex	
Detector 1 Channel												
Detector 1 Extend (s)	0.0	0.0	0.0	0.0	0.0	0.0	0.0	0.0		0.0	0.0	
Detector 1 Queue (s)	0.0	0.0	0.0	0.0	0.0	0.0	0.0	0.0		0.0	0.0	
Detector 1 Delay (s)	0.0	0.0	0.0	0.0	0.0	0.0	0.0	0.0		0.0	0.0	
Detector 2 Position(ft)		94			94			94			94	
Detector 2 Size(ft)		6			6			6			6	
Detector 2 Type		Cl+Ex			Cl+Ex			Cl+Ex			Cl+Ex	
Detector 2 Channel												
Detector 2 Extend (s)		0.0			0.0			0.0			0.0	
Turn Type	Perm	NA	Perm	Perm	NA	Perm	Perm	NA		Perm	NA	
Protected Phases		4			8			2			6	
Permitted Phases	4		4	8		8	2			6		
Detector Phase	4	4	4	8	8	8	2	2		6	6	
Switch Phase												
Minimum Initial (s)	4.0	4.0	4.0	4.0	4.0	4.0	4.0	4.0		4.0	4.0	

Lane Group	EBL	EBT	EBR	WBL	WBT	WBR	NBL	NBT	NBR	SBL	SBT	SBR
Minimum Split (s)	21.0	21.0	21.0	21.0	21.0	21.0	21.0	21.0		21.0	21.0	
Total Split (s)	40.0	40.0	40.0	40.0	40.0	40.0	65.0	65.0		65.0	65.0	
Total Split (%)	38.1%	38.1%	38.1%	38.1%	38.1%	38.1%	61.9%	61.9%		61.9%	61.9%	
Maximum Green (s)	35.0	35.0	35.0	35.0	35.0	35.0	60.0	60.0		60.0	60.0	
Yellow Time (s)	4.0	4.0	4.0	4.0	4.0	4.0	4.0	4.0		4.0	4.0	
All-Red Time (s)	1.0	1.0	1.0	1.0	1.0	1.0	1.0	1.0		1.0	1.0	
Lost Time Adjust (s)		0.0	0.0		0.0	0.0		0.0			0.0	
Total Lost Time (s)		5.0	5.0		5.0	5.0		5.0			5.0	
Lead/Lag												
Lead-Lag Optimize?												
Vehicle Extension (s)	3.0	3.0	3.0	3.0	3.0	3.0	3.0	3.0		3.0	3.0	
Recall Mode	None	None	None	None	None	None	Max	Max		Max	Max	
Walk Time (s)	5.0	5.0	5.0	5.0	5.0	5.0	5.0	5.0		5.0	5.0	
Flash Dont Walk (s)	11.0	11.0	11.0	11.0	11.0	11.0	11.0	11.0		11.0	11.0	
Pedestrian Calls (#/hr)	0	0	0	0	0	0	0	0		0	0	
Act Effct Green (s)		16.6	16.6		16.6	16.6		60.2			60.2	
Actuated g/C Ratio		0.19	0.19		0.19	0.19		0.69			0.69	
v/c Ratio		0.69	0.19		0.53	0.47		0.11			0.79	
Control Delay		43.1	8.6		37.2	7.5		5.3			18.1	
Queue Delay		0.0	0.0		0.0	0.0		0.0			0.0	
Total Delay		43.1	8.6		37.2	7.5		5.3			18.1	
LOS		D	A		D	A		A			B	
Approach Delay		35.3			20.4			5.3			18.1	
Approach LOS		D			C			A			B	

Intersection Summary

Area Type: Other
Cycle Length: 105
Actuated Cycle Length: 86.8
Natural Cycle: 65
Control Type: Actuated-Uncoordinated
Maximum v/c Ratio: 0.79
Intersection Signal Delay: 20.9 Intersection LOS: C
Intersection Capacity Utilization 76.8% ICU Level of Service D
Analysis Period (min) 15

Splits and Phases: 23: White St & Flagler Ave

HCM Unsignalized Intersection Capacity Analysis
13: White St & Seminary St

10/30/2013

Movement	EBL	EBT	EBR	WBL	WBT	WBR	NBL	NBT	NBR	SBL	SBT	SBR
Lane Configurations												
Volume (veh/h)	7	6	13	5	4	18	22	366	4	23	819	13
Sign Control		Stop			Stop			Free			Free	
Grade		0%			0%			0%			0%	
Peak Hour Factor	0.89	0.89	0.89	0.89	0.89	0.89	0.89	0.89	0.89	0.89	0.89	0.89
Hourly flow rate (vph)	8	7	15	6	4	20	25	411	4	26	920	15
Pedestrians												
Lane Width (ft)												
Walking Speed (ft/s)												
Percent Blockage												
Right turn flare (veh)												
Median type								None			None	
Median storage veh)												
Upstream signal (ft)												
pX, platoon unblocked												
vC, conflicting volume	1465	1444	928	1460	1449	413	935			416		
vC1, stage 1 conf vol												
vC2, stage 2 conf vol												
vCu, unblocked vol	1465	1444	928	1460	1449	413	935			416		
tC, single (s)	7.1	6.5	6.2	7.1	6.5	6.2	4.1			4.1		
tC, 2 stage (s)												
tF (s)	3.5	4.0	3.3	3.5	4.0	3.3	2.2			2.2		
p0 queue free %	92	95	96	94	96	97	97			98		
cM capacity (veh/h)	97	126	328	95	125	643	741			1154		

Direction, Lane #	EB 1	WB 1	NB 1	SB 1
Volume Total	29	30	440	961
Volume Left	8	6	25	26
Volume Right	15	20	4	15
cSH	163	240	741	1154
Volume to Capacity	0.18	0.13	0.03	0.02
Queue Length 95th (ft)	16	11	3	2
Control Delay (s)	31.9	22.2	1.0	0.6
Lane LOS	D	C	A	A
Approach Delay (s)	31.9	22.2	1.0	0.6
Approach LOS	D	C		

Intersection Summary			
Average Delay	1.8		
Intersection Capacity Utilization	61.0%	ICU Level of Service	B
Analysis Period (min)	15		

HCM Unsignalized Intersection Capacity Analysis
18: White St & South St

10/30/2013

Movement	EBL	EBT	EBR	WBL	WBT	WBR	NBL	NBT	NBR	SBL	SBT	SBR
Lane Configurations												
Volume (veh/h)	16	20	76	2	2	9	23	343	6	26	619	11
Sign Control		Stop			Stop			Free			Free	
Grade		0%			0%			0%			0%	
Peak Hour Factor	0.90	0.90	0.90	0.90	0.90	0.90	0.90	0.90	0.90	0.90	0.90	0.90
Hourly flow rate (vph)	18	22	84	2	2	10	26	381	7	29	688	12
Pedestrians												
Lane Width (ft)												
Walking Speed (ft/s)												
Percent Blockage												
Right turn flare (veh)												
Median type								None			None	
Median storage veh)												
Upstream signal (ft)												
pX, platoon unblocked												
vC, conflicting volume	1198	1191	694	1283	1193	384	700			388		
vC1, stage 1 conf vol												
vC2, stage 2 conf vol												
vCu, unblocked vol	1198	1191	694	1283	1193	384	700			388		
tC, single (s)	7.1	6.5	6.2	7.1	6.5	6.2	4.1			4.1		
tC, 2 stage (s)												
tF (s)	3.5	4.0	3.3	3.5	4.0	3.3	2.2			2.2		
p0 queue free %	88	88	81	98	99	99	97			98		
cM capacity (veh/h)	154	179	446	101	179	668	906			1182		

Direction, Lane #	EB 1	WB 1	NB 1	SB 1
Volume Total	124	14	413	729
Volume Left	18	2	26	29
Volume Right	84	10	7	12
cSH	290	292	906	1182
Volume to Capacity	0.43	0.05	0.03	0.02
Queue Length 95th (ft)	51	4	2	2
Control Delay (s)	26.4	17.9	0.9	0.6
Lane LOS	D	C	A	A
Approach Delay (s)	26.4	17.9	0.9	0.6
Approach LOS	D	C		

Intersection Summary			
Average Delay	3.4		
Intersection Capacity Utilization	56.2%	ICU Level of Service	B
Analysis Period (min)	15		

HCM Unsignalized Intersection Capacity Analysis
28: Grinnell St & United St

10/30/2013

Movement	EBL	EBT	EBR	WBL	WBT	WBR	NBL	NBT	NBR	SBL	SBT	SBR
Lane Configurations												
Volume (veh/h)	13	358	30	33	164	2	12	20	10	2	14	5
Sign Control		Free			Free			Stop			Stop	
Grade		0%			0%			0%			0%	
Peak Hour Factor	0.90	0.90	0.90	0.90	0.90	0.90	0.90	0.90	0.90	0.90	0.90	0.90
Hourly flow rate (vph)	14	398	33	37	182	2	13	22	11	2	16	6
Pedestrians												
Lane Width (ft)												
Walking Speed (ft/s)												
Percent Blockage												
Right turn flare (veh)												
Median type		None			None							
Median storage veh)												
Upstream signal (ft)												
pX, platoon unblocked												
vC, conflicting volume	184			431			713	701	414	722	717	183
vC1, stage 1 conf vol												
vC2, stage 2 conf vol												
vCu, unblocked vol	184			431			713	701	414	722	717	183
tC, single (s)	4.1			4.1			7.1	6.5	6.2	7.1	6.5	6.2
tC, 2 stage (s)												
tF (s)	2.2			2.2			3.5	4.0	3.3	3.5	4.0	3.3
p0 queue free %	99			97			96	94	98	99	95	99
cM capacity (veh/h)	1402			1139			324	350	642	312	343	864

Direction, Lane #	EB 1	WB 1	NB 1	SB 1
Volume Total	446	221	47	23
Volume Left	14	37	13	2
Volume Right	33	2	11	6
cSH	1402	1139	383	396
Volume to Capacity	0.01	0.03	0.12	0.06
Queue Length 95th (ft)	1	2	10	5
Control Delay (s)	0.3	1.6	15.7	14.7
Lane LOS	A	A	C	B
Approach Delay (s)	0.3	1.6	15.7	14.7
Approach LOS			C	B

Intersection Summary			
Average Delay	2.2		
Intersection Capacity Utilization	35.9%	ICU Level of Service	A
Analysis Period (min)	15		

HCM Unsignalized Intersection Capacity Analysis
33: Grinnell St & Seminary St

10/30/2013

Movement	EBL	EBT	EBR	WBL	WBT	WBR	NBL	NBT	NBR	SBL	SBT	SBR
Lane Configurations												
Sign Control		Stop			Stop			Stop			Stop	
Volume (vph)	6	5	0	1	9	22	0	24	2	29	43	0
Peak Hour Factor	0.92	0.92	0.92	0.92	0.92	0.92	0.92	0.92	0.92	0.92	0.92	0.92
Hourly flow rate (vph)	7	5	0	1	10	24	0	26	2	32	47	0

Direction, Lane #	EB 1	WB 1	NB 1	SB 1
Volume Total (vph)	12	35	28	78
Volume Left (vph)	7	1	0	32
Volume Right (vph)	0	24	2	0
Hadj (s)	0.11	-0.41	-0.05	0.08
Departure Headway (s)	4.3	3.7	4.0	4.1
Degree Utilization, x	0.01	0.04	0.03	0.09
Capacity (veh/h)	816	933	869	863
Control Delay (s)	7.3	6.9	7.2	7.5
Approach Delay (s)	7.3	6.9	7.2	7.5
Approach LOS	A	A	A	A

Intersection Summary			
Delay	7.3		
Level of Service	A		
Intersection Capacity Utilization	20.8%	ICU Level of Service	A
Analysis Period (min)	15		