CONTRACT DOCUMENTS

FOR THE CONSTRUCTION OF THE

NORTH SIMONTON STORMWATER EMERGENCY OUTFALL

PREPARED FOR

CITY OF KEY WEST

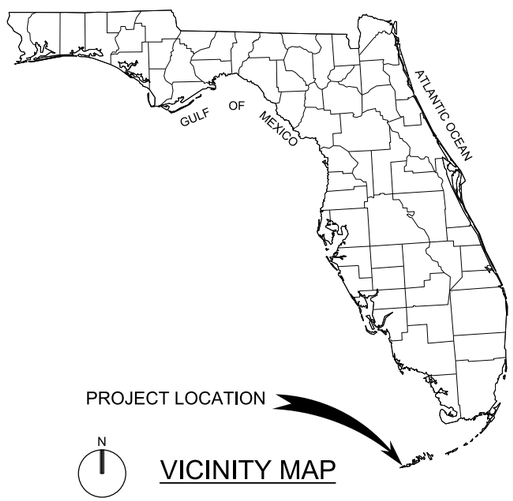

VICINITY MAP

INDEX TO DRAWINGS

GENERAL

G-01 CIVIL GENERAL NOTES, LEGEND AND ABBREVIATIONS
G-02 STRUCTURAL LEGEND
G-03 ELECTRICAL LEGEND

CIVIL

C-01 SITE PLAN

STRUCTURAL

S-01 PLATFORM PLANS AND SECTION

ELECTRICAL

E-01 SITE PLAN EXISTING CONDITIONS
E-02 SITE PLAN PROPOSED MODIFICATIONS
E-03 PLAN PROPOSED MODIFICATIONS
E-04 RISER DIAGRAM

STANDARD DETAILS

SD-01 CIVIL STANDARD DETAILS
SD-02 STRUCTURAL STANDARD DETAILS
SD-03 STRUCTURAL STANDARD DETAILS
SD-04 ELECTRICAL STANDARD DETAILS
SD-05 ELECTRICAL STANDARD DETAILS

Volume 2 of 2

Drawings

For information regarding
this project, contact:

ANDREW SMYTH P.E.
6410 5th Street, Suite 2-A
Key West, FL 33040
305/294-1645

CH2MHILL®

CH2M Hill Project No. 476166
City of Key West Project No. ST 1302
City of Key West ITB No. 14-010
MARCH 2014

BID DOCUMENTS

GENERAL SITE NOTES:

1. SOURCE OF TOPOGRAPHY SHOWN ON THE CIVIL PLANS ARE BASE MAPS PROVIDED BY AVIROM & ASSOCIATES, INC., JUNE 2013. ADDITIONAL MAPPING HAS BEEN ADDED FROM AS-BUILT DATA FROM CH2M HILL AND THE CITY OF KEY WEST. EXISTING CONDITIONS MAY VARY FROM THOSE SHOWN ON THESE PLANS. THE CONTRACTOR SHALL VERIFY EXISTING CONDITIONS AND ADJUST WORK PLAN ACCORDINGLY PRIOR TO BEGINNING CONSTRUCTION.
2. EXISTING TOPOGRAPHY, STRUCTURES, AND SITE FEATURES ARE SHOWN SCREENED AND/OR LIGHT-LINED. NEW FINISH GRADE, STRUCTURES, AND SITE FEATURES ARE SHOWN HEAVY-LINED.
3. HORIZONTAL DATUM: NAD 83, STATE PLANE - FLORIDA EAST
4. VERTICAL DATUM: NGVD 1929
5. ALL UNITS ARE IN US SURVEY FEET.
6. THE SITE LIES IN FEMA FLOOD ZONE VE WITH A BASE FLOOD ELEVATION OF 10.
7. MAINTAIN, RELOCATE, OR REPLACE EXISTING SURVEY MONUMENTS, CONTROL POINTS, AND STAKES WHICH ARE DISTURBED OR DESTROYED. PERFORM THE WORK TO PRODUCE THE SAME LEVEL OF ACCURACY AS THE ORIGINAL MONUMENT(S) IN A TIMELY MANNER, AND AT THE CONTRACTOR'S EXPENSE.
8. COORDINATE STAGING AREA WITH THE CITY. STAGING AREA SHALL BE FOR CONTRACTOR'S EMPLOYEE PARKING, CONTRACTOR'S TRAILERS AND ON-SITE STORAGE OF MATERIALS.
9. PROVIDE TEMPORARY FENCING AS NECESSARY TO MAINTAIN SECURITY AT ALL TIMES.
10. ELEVATIONS GIVEN ARE TO FINISH GRADE AND PIPE INVERT UNLESS OTHERWISE SHOWN.
11. CONTRACTOR SHALL BE RESPONSIBLE FOR IMPLEMENTING AND MAINTAINING EROSION CONTROL DEVICES DURING CONSTRUCTION. EROSION CONTROL DEVICES SHOWN ARE THE MINIMUM REQUIRED.
12. CONTRACTOR SHALL TAKE ALL OTHER MEASURES TO POSITIVELY PRECLUDE EROSION MATERIALS FROM LEAVING THE SITE.
13. LIMIT CONSTRUCTION OPERATIONS TO WITHIN THE RIGHT-OF-WAY EASEMENTS AND ANY OTHER DESIGNATED WORK AREAS AS INDICATED. THE CONTRACTOR IS SOLELY RESPONSIBLE FOR ANY DAMAGES AS A RESULT OF CONSTRUCTION ACTIVITIES OUTSIDE OF RIGHT-OF-WAY. EASEMENTS AND ANY OTHER DESIGNATED WORK AREAS SHOWN ON THE DRAWINGS.
14. CONTRACTOR SHALL REPLACE ALL PAVEMENTS, PAVEMENT MARKINGS, SIGNS, AND REFLECTIVE MARKERS DISTURBED OR REMOVED DURING CONSTRUCTION.
15. TREE AND SHRUB REMOVAL AND/OR TRIMMING MUST BE COMPLETED BY A CITY APPROVED ISA CERTIFIED ARBORIST.

GENERAL PIPING AND UTILITIES NOTES:

1. EXISTING UNDERGROUND UTILITIES OBTAINED FROM AS-BUILTS AND FROM FIELD SURVEY AND HAS NOT BEEN FIELD VERIFIED FOR ACCURACY. CONTRACTOR SHALL FIELD VERIFY DEPTH AND LOCATION OF ALL UTILITIES PRIOR TO EXCAVATION. PROTECT ALL EXISTING UTILITIES DURING CONSTRUCTION.
2. EXISTING PIPING AND EQUIPMENT ARE SHOWN SCREENED, LIGHT-LINED, OR NOTED AS EXISTING. NEW PIPING AND EQUIPMENT ARE SHOWN BOLD AND/OR HEAVY-LINED.
3. UNLESS OTHERWISE SHOWN ALL PIPING SHALL HAVE A MINIMUM OF 36" COVER.
4. ALL PIPES SHALL HAVE A CONSTANT SLOPE BETWEEN INVERT ELEVATIONS UNLESS A FITTING IS SHOWN.
5. FOR TRENCHING AND BACKFILL, SEE 3123-110 .
6. FOR SURFACE RESTORATION OF ASPHALT CONCRETE, SEE 3123-115 .
7. MINIMUM ALLOWABLE CLEARANCE BETWEEN PIPES AT CROSSINGS SHALL BE 12".
8. PIPELINE STATIONING AND LENGTHS OF PIPE INDICATED ARE BASED ON HORIZONTAL PROJECTION OF THE PIPE CENTERLINE.
9. VERIFY THE ACTUAL LOCATION, ELEVATION AND CONDITION OF POINTS OF CONNECTION TO EXISTING FACILITIES AND PROVIDE NOTICE OF ANY DISCREPANCIES.
10. SIZE OF FITTINGS SHOWN ON PLANS SHALL CORRESPOND TO ADJACENT STRAIGHT RUN OF PIPE, UNLESS OTHERWISE INDICATED. TYPE OF JOINT AND FITTING MATERIAL SHALL BE THE SAME AS SHOWN FOR ADJACENT STRAIGHT RUN OF PIPE.
11. ALL JOINTS SHALL BE WATERTIGHT.
12. ALL FLEXIBLE CONNECTORS OR FLANGED COUPLING ADAPTERS SHALL BE PROVIDED WITH THRUST TIES, BLOCKS, OR ANCHORS, UNLESS OTHERWISE NOTED. THRUST PROTECTION SHALL BE ADEQUATE FOR TEST PRESSURES SPECIFIED.
13. ALL BURIED PIPING SPECIFIED TO BE PRESSURE TESTED, EXCEPT FLANGED, WELDED, OR SCREWED PIPING, SHALL BE PROVIDED WITH THRUST RESTRAINT AT ALL JOINTS AND AT ALL CONNECTIONS TO FITTINGS AND VALVES.

LEGEND

- ANTENNA
- BACKFLOW PREVENTOR VALVE
- BENCHMARK
- BOLLARD
- CONCRETE UTILITY POLE
- DOUBLE DETECTOR CHECK VALVE
- DRAINAGE MANHOLE
- ELECTRIC SERVICE BOX
- FIRE HYDRANT
- GREASE TRAP
- LIGHT POLE
- OVERHEAD WIRES
- SANITARY CLEANOUT
- SANITARY MANHOLE
- SANITARY VALVE
- SIGN
- VALVE
- VAULT
- WATER METER
- WOOD UTILITY POLE
- APPROXIMATE RIGHT-OF-WAY LINE
- 10+00 PROPOSED PIPE WITH STATIONING
- 8" BUTTONWOOD (DIAMETER)
- 8" FICUS (DIAMETER)
- 8" GUMBO LIMBO (DIAMETER)
- 8" PALM (DIAMETER)

ABBREVIATIONS

@	AT
CLDI	CEMENT LINED DUCTILE IRON
CONC	CONCRETE
DIA	DIAMETER
DR	DRIVE OR DIMENSION RATIO
DFM	DRAINAGE FORCE MAIN
E	EAST
ECC	ECCENTRIC
EL	ELEVATION
EX OR EXST	EXISTING
EW	EACH WAY
HDPE	HIGH DENSITY POLYETHYLENE
HORIZ	HORIZONTAL
INV	INVERT
IP	IRON POST
LT	LEFT
MAX	MAXIMUM
MH	MANHOLE
MIN	MINIMUM
MJ	MECHANICAL JOINT
N	NORTH
NO	NUMBER
NTS	NOT TO SCALE
OC	ON CENTER
OD	OUTSIDE DIAMETER
PL	PROPERTY LINE
PP	POWER POLE
PVC	POLYVINYLCHLORIDE
RCP	REINFORCED CONCRETE PIPE
RD	ROAD
REQD	REQUIRED
RJ	RESTRAINED JOINT
RT	RIGHT
R/W	RIGHT OF WAY
S	SOUTH
SD	STORM DRAIN
SDR	STANDARD DIMENSION RATIO
SPECD	SPECIFIED
SS	SANITARY SEWER
SST	STAINLESS STEEL
STA	STATION
T, TEL	TELEPHONE
TYP	TYPICAL
VERT	VERTICAL
W	WATER, WEST
W/	WITH
WT	WEIGHT

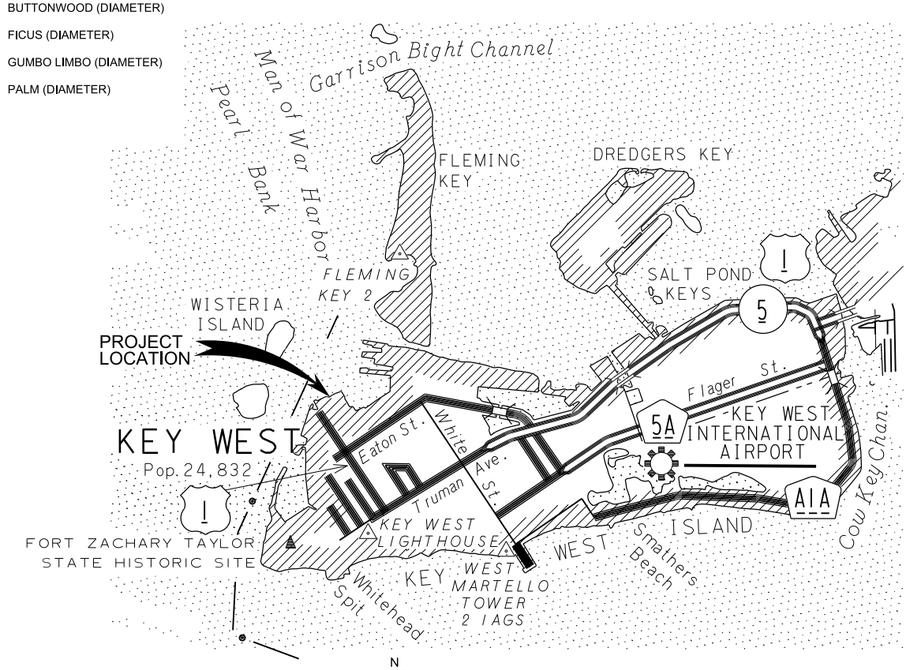

N

LOCATION MAP

Copyright for this map is registered by the State of Florida, Department of Transportation

SECTION AND DETAIL IDENTIFICATION

SECTION AND DETAIL DESIGNATORS

SECTION (LETTER) OR DETAIL (NUMBER) DESIGNATION — A / M-2 — DRAWING NUMBER WHERE DETAIL CAN BE FOUND

DETAIL DESIGNATED — A — DETAIL NAME — SCALE: AS DESIGNATED

ON DRAWING WHERE DETAIL IS DRAWN:

STANDARD DETAIL DESIGNATION

STANDARD DETAIL — 1234-567 — AS INDICATED (SEE DETAIL DRAWINGS)

VALVE DESIGNATIONS

MANUAL VALVES AND CHECK VALVES

8" - V 405

SIZE OF VALVE

VALVE DESIGNATION

VALVE TYPE, SEE SPECIFICATION 40 27 02

Call 48 hours before you dig
It's the Law! 811
Sunshine State One Call of Florida, Inc.

NO.	DATE	REVISION	BY	APVD

DSGN R MORRISON | DR R MORRISON | CHK A MALONE | APVD R MORRISON

CH2MHILL®
3011 S.W. WILLISTON ROAD
GAINESVILLE, FLORIDA 32608
EB0000072 AAC001992
Richard Thomas Morrison PE 67713

NORTH SIMONTON STORMWATER EMERGENCY OUTFALL
CITY OF KEY WEST
KEY WEST, FLORIDA

GENERAL
CIVIL GENERAL NOTES, LEGEND AND ABBREVIATIONS

NTS
VERIFY SCALE
BAR IS ONE INCH ON ORIGINAL DRAWING. 0 1"

DATE	MARCH 2014
PROJ	476166
DWG	G-01
SHEET	ShtNum of ShtTot

BID DOCUMENTS

REUSE OF DOCUMENTS: THIS DOCUMENT, AND THE IDEAS AND DESIGNS INCORPORATED HEREIN, AS AN INSTRUMENT OF PROFESSIONAL SERVICE, IS THE PROPERTY OF CH2M HILL AND IS NOT TO BE USED, IN WHOLE OR IN PART, FOR ANY OTHER PROJECT WITHOUT THE WRITTEN AUTHORIZATION OF CH2M HILL.
©CH2M HILL 2014. ALL RIGHTS RESERVED.

DESIGN CRITERIA

1. APPLICABLE CODE: 2010 FLORIDA BUILDING CODE.
2. REFER TO THE DRAWINGS FOR ADDITIONAL AND SPECIFIC STRUCTURE LOADINGS AND REQUIREMENTS.
3. ALL LOADS SHOWN ARE SERVICE LEVEL (UNFACTORED) UNLESS SPECIFICALLY NOTED OTHERWISE.
4. DEAD LOADS:
   A. SELF WEIGHT
5. FLOOR LIVE LOADS:

CORRIDORS, EXITS, STAIRS	100 PSF
WALKWAYS AND ELEVATED PLATFORMS	100 PSF

6. WIND LOADS:

ULTIMATE DESIGN WIND SPEED (3-SECOND GUST), V	= 200 MPH
EXPOSURE CATEGORY	= D
OCCUPANCY CATEGORY	= III

7. SOIL DESIGN PARAMETERS:
   A. NET ALLOWABLE SOIL BEARING PRESSURES: 3000 PSF

GENERAL INFORMATION

1. FOR ABBREVIATIONS NOT LISTED, SEE ASME Y14.38 "ABBREVIATIONS AND ACRONYMS: PUBLICATION AS DISTRIBUTED BY THE AMERICAN SOCIETY OF MECHANICAL ENGINEERS (ASME).
2. DESIGN DETAILS ARE INTENDED TO BE TYPICAL AND SHALL APPLY TO SIMILAR SITUATIONS OCCURRING THROUGHOUT THE PROJECT, WHETHER OR NOT THEY ARE INDIVIDUALLY CALLED OUT.
3. VERIFY FINAL OPENING DIMENSIONS IN WALLS, SLABS, AND DECKS WITH OTHER DISCIPLINE DRAWINGS PRIOR TO CONSTRUCTION OF THESE ELEMENTS.
4. FOR NUMBER, TYPE, SIZE, ARRANGEMENT, AND/OR LOCATION OF EQUIPMENT PADS, SEE OTHER DISCIPLINE DRAWINGS. COORDINATE WITH EQUIPMENT SUPPLIER PRIOR TO PLACING SLABS, WALLS AND FOUNDATIONS. COORDINATE PIPING OPENINGS WITH OTHER DISCIPLINE DRAWINGS.
5. DO NOT CUT OR MODIFY STRUCTURAL MEMBERS FOR PIPES, DUCTS, ETC, UNLESS SPECIFICALLY DETAILED OR APPROVED IN WRITING BY THE ENGINEER.
6. VISITS TO THE JOB SITE BY THE ENGINEER TO OBSERVE THE CONSTRUCTION DO NOT IN ANY WAY MEAN THAT ENGINEER IS GUARANTOR OF CONSTRUCTOR'S WORK, NOR RESPONSIBLE FOR THE COMPREHENSIVE OR SPECIAL INSPECTIONS, COORDINATION, SUPERVISION, OR SAFETY AT THE JOB SITE.

FOUNDATIONS

1. REFER TO GEOTECHNICAL DATA REPORT BY NUTTING ENGINEERS OF FLORIDA, INC DATED AUGUST 21, 2002.
2. EXCAVATIONS SHALL BE SHORED TO PREVENT SUBSIDENCE OR DAMAGE TO ADJACENT EXISTING STRUCTURES, ROADS, UTILITIES, ETC.
3. FOUNDATION SLABS, SLABS-ON-GRADE AND WALL AND COLUMN FOUNDATIONS SPECIFICALLY NOTED TO BE ON FILL SHALL BEAR ON 6 INCHES OF COMPACTED GRANULAR FILL
4. FOUNDATION BEARING SURFACES SHALL BE OBSERVED BY THE GEOTECHNICAL ENGINEER PRIOR TO PLACEMENT OF FORMWORK OR REINFORCING STEEL. THE OBSERVATION SHALL VERIFY IF THE ACTUAL EXPOSED SUBGRADE IS AS ANTICIPATED BY THE SITE SPECIFIC BORINGS.

FORMWORK, SHORING, AND BRACING

1. STRUCTURES SHOWN ON THE DRAWINGS HAVE BEEN DESIGNED FOR STABILITY UNDER FINAL CONDITIONS ONLY. DESIGN SHOWN DOES NOT INCLUDE NECESSARY COMPONENTS OR EQUIPMENT FOR STABILITY OF THE STRUCTURES DURING CONSTRUCTION. CONTRACTOR IS RESPONSIBLE FOR WORK RELATING TO CONSTRUCTION ERECTION METHODS, BRACING, SHORING, RIGGING, GUYS, SCAFFOLDING, FORMWORK, AND OTHER WORK AIDS REQUIRED TO SAFELY PERFORM THE WORK SHOWN.
2. TEMPORARY SHORING SHALL REMAIN IN PLACE UNTIL ELEVATED CONCRETE FLOOR OR SLABS HAVE REACHED 80 PERCENT OF THE 28 DAY COMPRESSIVE STRENGTH AS DETERMINED BY FIELD CYLINDER BREAKS.
3. "BURY"BARS OR "CARRIER"BARS ARE NOT ALLOWED FOR THE BOTTOM MATS OF REINFORCING IN ALL ELEVATED SLABS AND ARE NOT ALLOWED FOR THE TOP MATS OF REINFORCING IN ELEVATED SLABS LESS THAN 12 INCHES THICK.

CONCRETE REINFORCING

1. REINFORCING STEEL:

TYPICAL:	ASTM A615, GRADE 60
WELDED:	ASTM A706, GRADE 60 (WELDING IS ONLY PERMITTED WITH WRITTEN PERMISSION FROM ENGINEER)

2. FABRICATION AND PLACEMENT OF REINFORCING STEEL SHALL BE IN ACCORDANCE WITH CRSI MSP-1 "MANUAL OF STANDARD PRACTICE"AND ACI 301 "SPECIFICATIONS FOR STRUCTURAL CONCRETE".
3. MINIMUM REINFORCING FOR CONCRETE WALLS AND SLABS SHALL BE AS FOLLOWS:

THICKNESS	REINF EACH WAY	LOCATION
6"	#4@12"	CENTERED
8"	#5@12"	CENTERED
10"	#4@12"	EACH FACE
12"	#5@12"	EACH FACE

PROVIDE LARGER SIZES AND MORE REINFORCING IN SECTIONS OF CONCRETE WHERE REQUIRED BY THE DETAILS ON THE DRAWINGS OR BY THE SPECIFICATIONS.

CONCRETE REINFORCING (CONTINUED)

4. CONCRETE COVER FOR REINFORCING, UNLESS SHOWN OTHERWISE, SHALL BE:

WHEN PLACED ON GROUND:	3"
INTERIOR, FINISHED, HUMIDITY CONTROLLED AREAS:	
WALLS, SLABS AND JOISTS	3/4"
OTHER CONCRETE SURFACES	2"

5. REFER TO WALL CORNER AND WALL INTERSECTION REINFORCING DETAIL 0330-003. WALL CORNER REINFORCING SIZES AND SPACINGS SHALL BE AS SHOWN ON THE DRAWINGS AND REFERENCED TO THIS DETAIL. TYPICAL HORIZONTAL WALL REINFORCING SHALL LAP WITH THE CORNER HORIZONTAL REINFORCING.
6. 90 DEGREE BENDS, UNLESS OTHERWISE SHOWN, SHALL BE ACI 318 STANDARD HOOKS.
7. WALL CORNER AND WALL INTERSECTION REINFORCEMENT BARS SHALL BE CONTINUOUS AROUND CORNERS AND THROUGH COLUMNS OR PILASTERS. REINFORCEMENT SHALL BE EXTENDED INTO CONNECTING WALLS AND LAPPED ON THE OPPOSITE FACE OF THE CONNECTING WALLS, AS INDICATED IN DETAIL 0330-003 .
8. WALL FOOTING CORNER AND INTERSECTION REINFORCEMENT BARS SHALL BE EXTENDED INTO CONNECTING FOOTINGS AND LAPPED ON THE OPPOSITE FACE OF THE CONNECTING FOOTING. OUTSIDE FACE WALL FOOTING REINFORCEMENT SHALL BE LAPPED WITH CORNER BARS. ALL WALL FOOTING REINFORCEMENT SHALL BE CONTINUOUS THROUGH COLUMNS OR PILASTERS FOOTINGS.
9. LAP VERTICAL WALL BARS WITH DOWELS FROM BASE SLABS AND EXTEND INTO TOP FACE OF ROOF SLABS AND LAP WITH TOP SLAB REINFORCEMENT. PROVIDE A MINIMUM OF FOUR FULL HEIGHT VERTICAL BARS WITH MATCHING DOWELS AT WALL ENDS, CORNERS AND INTERSECTIONS WITH SIZE TO MATCH TYPICAL VERTICAL REINFORCING STEEL SHOWN OR REQUIRED BY NOTES ABOVE.
10. LOCATE ELEVATED SLAB AND BEAM TOP BAR SPLICES AT MIDSPAN AND BOTTOM BAR SPLICES AT SUPPORTS.
11. REINFORCING STEEL FOR FOOTINGS AND SLABS ON GRADE SHALL BE ADEQUATELY SUPPORTED ON BAR SUPPORTS WITH SPACERS TO KEEP REINFORCING ABOVE THE PREPARED GRADE. LIFTING REINFORCING OFF GRADE DURING CONCRETE PLACEMENT IS NOT PERMITTED.
12. REFER TO OPENING REINFORCING DETAILS 0330-001 AND 0330-002.
13. REINFORCEMENT BENDS AND LAPS, UNLESS OTHERWISE NOTED, SHALL SATISFY THE FOLLOWING MINIMUM REQUIREMENTS:

CONCRETE DESIGN STRENGTH = 4,000 PSI AT 28 DAYS[3] GRADE 60 REINFORCING STEEL										
BAR SIZE		#3	#4	#5	#6	#7	#8	#9	#10	#11
LAP SPLICE LENGTH										
SPACING = 3"	TOP BAR [2]	1'-4"	1'-8"	2'-1"	3'-0"	5'-2"	6'-8"	8'-6"	10'-10"	`13'-4"
	OTHER BAR	1'-4"	1'-4"	1'-8"	2'-4"	4'-0"	5'-2"	6'-7"	8'-4"	10'-3"
SPACING = 4"	TOP BAR [2]	1'-4"	1'-8"	2'-0"	2'-5"	3'-10"	5'-0"	6'-5"	8'-1"	10'-0"
	OTHER BAR	1'-4"	1'-4"	1'-7"	1'-10"	3'-0"	3'-11"	4 -11"	6'-3"	7'-8"
SPACING ≥ 6"	TOP BAR [2]	1'-4"	1'-8"	2'-0"	2'-5"	3'-6"	4'-0"	5'-0"	6'-2"	7'-5"
	OTHER BAR	1'-4"	1'-4"	1'-7"	1'-10"	2'-9"	3'-1"	3 -10"	4'-9"	5'-8"
EMBEDMENT LENGTH-										
SPACING = 3"	TOP BAR [2]	1'-0"	1'-3"	1'-8"	2'-4"	4'-0"	5'-2"	6'-7"	8'-4"	10'-3"
	OTHER BAR	1'-0"	1'-0"	1'-3"	1'-10"	3'-1"	4'-0"	5'-1"	6'-5"	7'-11"
SPACING = 4"	TOP BAR [2]	1'-0"	1'-3"	1'-7"	1'-10"	3'-0"	3'-11"	4 -11"	6'-3"	7'-8"
	OTHER BAR	1'-0"	1'-0"	1'-3"	1'-5"	2'-4"	3'-0"	3 -10"	4'-10"	5'-11"
SPACING ≥ 6"	TOP BAR [2]	1'-0"	1'-3"	1'-7"	1'-10"	2'-9"	3'-1"	3 -10"	4'-9"	5'-8"
	OTHER BAR	1'-0"	1'-0"	1'-3"	1'-5"	2'-1"	2'-5"	3'-0"	3'-8"	4'-5"

1. LAP LENGTHS ARE BASED ON MINIMUM CONCRETE COVER OF 2". LONGER LENGTHS ARE REQUIRED FOR CONCRETE COVER LESS THAN 2".
2. TOP BARS SHALL BE DEFINED AS ANY HORIZONTAL BARS PLACED SUCH THAT MORE THAN 12 INCHES OF CONCRETE IS CAST IN THE MEMBER BELOW THE BAR IN ANY SINGLE POUR. HORIZONTAL WALL BARS ARE CONSIDERED TOP BARS.
3. WHERE 3000 PSI CONCRETE IS USED, INCREASE ABOVE LENGTHS BY 16 PERCENT. WHERE 3500 PSI CONCRETE IS USED, INCREASE ABOVE LENGTHS BY 7 PERCENT.

CAST IN PLACE CONCRETE

1. 28-DAY COMPRESSIVE STRENGTHS:

ALL STRUCTURES:	5000 PSI
CURBS AND SIDEWALKS:	5000 PSI
DUCT BANKS AND PIPE ENCASEMENTS NOT INTEGRAL WITH FOUNDATIONS:	5000 PSI

2. DESIGN STRENGTHS ARE SAME AS 28-DAY COMPRESSIVE STRENGTHS.
3. CONTINUOUS WATERSTOP AS SPECIFIED SHALL BE INSTALLED IN CONSTRUCTION JOINTS OF WATER HOLDING BASINS, CHANNELS, AND BELOW GRADE STRUCTURES, EXCEPT WHERE SPECIFICALLY NOTED OTHERWISE.
4. CONSTRUCTION JOINTS INDICATED ARE SUGGESTED LOCATIONS. CONTRACTOR MAY REVISE LOCATION OF JOINTS, SUBJECT TO SPECIFIED REQUIREMENTS. LAYOUT SHOWING ALL CONSTRUCTION JOINT LOCATIONS SHALL BE SUBMITTED FOR REVIEW BY ENGINEER.
5. ROUGHEN AND CLEAN CONSTRUCTION JOINTS IN WALLS AND SLABS AS SPECIFIED PRIOR TO PLACING ADJACENT CONCRETE.
6. COORDINATE PLACEMENT OF OPENINGS, CURBS, DOWELS, SLEEVES, CONDUITS, BOLTS AND INSERTS PRIOR TO PLACEMENT OF CONCRETE.
7. NO ALUMINUM CONDUIT OR PRODUCTS CONTAINING ALUMINUM OR ANY OTHER MATERIAL INJURIOUS TO THE CONCRETE SHALL BE EMBEDDED IN THE CONCRETE.
8. DO NOT PLACE CONDUIT PARALLEL TO BEAM OR COLUMN REINFORCEMENT UNLESS SPECIFICALLY INDICATED IN DRAWINGS.
9. PATCH FORM TIE HOLES IN ACCORDANCE WITH DETAILS 0310-051 AND/OR 0310-052.

WELDING

1. WELDS SHALL CONFORM TO AMERICAN WELDING SOCIETY (AWS):
   D1.1, STRUCTURAL WELDING CODE STEEL
   D1.2, STRUCTURAL WELDING CODE ALUMINUM
   D1.3, STRUCTURAL WELDING CODE SHEET STEEL
   D1.4, STRUCTURAL WELDING CODE REINFORCING STEEL
   D1.6, STRUCTURAL WELDING CODE STAINLESS STEEL
2. REPAIR WELDS FOUND DEFECTIVE IN ACCORDANCE WITH AWS D1.1 SECTION 5.26.
3. USE INTERMITTENT WELDS AT FIELD WELDS OF EMBED PLATES AND ANGLES TO AVOID SPALLING OR CRACKING OF THE EXISTING CONCRETE.
4. BUTT JOINT WELDS SHALL BE COMPLETE JOINT PENETRATION (CJP) UNLESS INDICATED OTHERWISE.

METAL FABRICATIONS

1. ALUMINUM SHALL CONFORM TO THE FOLLOWING ASTM STANDARDS:

STRUCTURAL SHAPES	B308
PLATES	B209

2. FASTENERS SHALL CONFORM TO THE FOLLOWING ASTM STANDARDS EXCEPT WHERE SPECIFICALLY INDICATED OTHERWISE:

   ANCHOR BOLTS (AB)
   STAINLESS STEEL F593, AISI TYPE 316, CONDITION CW

3. ITEMS TO BE EMBEDDED IN CONCRETE SHALL BE CLEAN AND FREE OF OIL, DIRT AND PAINT.
4. NO HOLES OTHER THAN THOSE SPECIFICALLY DETAILED SHALL BE ALLOWED THROUGH STRUCTURAL STEEL MEMBERS. NO CUTTING OR BURNING OF STRUCTURAL STEEL IS PERMITTED WITHOUT THE APPROVAL OF THE ENGINEER.

NO.	DATE	REVISION	BY	APVD

DSGN S TROYAN | DR J THORNTON | CHK | APVD

CH2MHILL®
3011 S.W. WILLISTON ROAD
GAINESVILLE, FLORIDA 32608
EB0000072 AAC001992
Dalayne Lange PE 70194

NORTH SIMONTON STORMWATER
EMERGENCY OUTFALL
CITY OF KEY WEST
KEY WEST, FLORIDA

GENERAL
STRUCTURAL GENERAL NOTES

NTS
VERIFY SCALE
BAR IS ONE INCH ON ORIGINAL DRAWING.
0 1"

DATE	MARCH 2014
PROJ	476166
DWG	G-02
SHEET	ShtNum of ShtTot

BID DOCUMENTS

REUSE OF DOCUMENTS: THIS DOCUMENT, AND THE IDEAS AND DESIGNS INCORPORATED HEREIN, AS AN INSTRUMENT OF PROFESSIONAL SERVICE, IS THE PROPERTY OF CH2M HILL AND IS NOT TO BE USED, IN WHOLE OR IN PART, FOR ANY OTHER PROJECT WITHOUT THE WRITTEN AUTHORIZATION OF CH2M HILL.
©CH2M HILL 2014. ALL RIGHTS RESERVED.

SYMBOL	DESCRIPTION

ONE LINE DIAGRAMS-1

	DRAWOUT AIR CIRCUIT BREAKER, LOW VOLTAGE
400	CIRCUIT BREAKER, THERMAL MAGNETIC TRIP SHOWN, 3 POLE, UNO
AS/AF or AT/AF	CIRCUIT BREAKER, STATIC TRIP UNIT, SENSOR AMP TRIP AND FRAME RATINGS SHOWN, 3 POLE, UNO
100/M	CIRCUIT BREAKER, MAGNETIC TRIP ONLY, TRIP RATING SHOWN, 3 POLE, UNO
400 400	CIRCUIT BREAKER WITH CURRENT LIMITING FUSES, TRIP AND FUSE RATING INDICATED, 3 POLE, UNO
400 225	FUSED SWITCH, SWITCH AND FUSE CURRENT RATING INDICATED, 3 POLE, UNO
100	SWITCH, CURRENT RATING INDICATED, 3 POLE, UNO
60 (3)	FUSE, CURRENT RATING AND QUANTITY INDICATED
1	MAGNETIC STARTER WITH OVERLOAD, NEMA SIZE INDICATED, FVNR UNO
AFD	ELECTRONIC STARTER/SPEED CONTROL RVSS = REDUCED VOLTAGE SOFT STARTER AFD = AC ADJUSTABLE FREQUENCY DRIVE DC = DC ADJUSTABLE SPEED DRIVE RVAT = REDUCED VOLTAGE AUTO TRANSFORMER TYPE RVRT = REDUCED VOLTAGE REACTOR TYPE
	CABLE OR BUS CONNECTION POINT
I	MECHANICAL INTERLOCK
	SURGE ARRESTER (GAP TYPE)
10	CAPACITOR - KVAR INDICATED, 3 PHASE
3	MOTOR, SQUIRREL CAGE INDUCTION - HORSEPOWER INDICATED
G 500/625	GENERATOR, KW/KVA RATING SHOWN
Δ	DELTA CONNECTION
Y	WYE GROUNDED CONNECTION, SOLID GROUND
DPM	DIGITAL POWER METER (MULTIFUNCTION)
O	UTILITY REVENUE METER
	GROUND
15 KVA 480-120/240V 1 PH	TRANSFORMER, SIZE, VOLTAGE RATINGS, AND PHASE INDICATED
	SHIELDED ISOLATION TRANSFORMER
480-120V (3)	POTENTIAL TRANSFORMER, VOLTAGE RATING AND QUANTITY INDICATED
100:5 (3)	CURRENT TRANSFORMER, RATIO(100:5) AND QUANTITY INDICATED (3)
	CONNECTION POINT TO EQUIPMENT SPECIFIED IN OTHER DIVISIONS. RACEWAY, CONDUCTOR AND CONNECTION IN THIS DIVISION
SPD	SURGE SUPPRESSION DEVICE

SYMBOL	DESCRIPTION

CONTROL DIAGRAMS-1

	PUSH-BUTTON SWITCH, MOMENTARY CONTACT, NORMALLY OPEN
	PUSH-BUTTON SWITCH, MOMENTARY CONTACT, NORMALLY CLOSED
	PUSH BUTTON SWITCH, MAINTAINED CONTACTS WITH MECHANICAL INTERLOCK
	3 POSITION SELECTOR SWITCH MAINTAINED CONTACT
HAND OFF REMOTE XOO OOX	SELECTOR SWITCH - MAINTAINED CONTACT - CHART IDENTIFIES OPERATION WHEN NEEDED FOR CLARITY:

	POSITION		
CKT	HAND	OFF	REMOTE
1	X	O	O
2	O	O	X

X - CLOSED CONTACT
O - OPEN CONTACT

	TOGGLE SWITCH, ON-OFF TYPE
ON OFF	SELECTOR SWITCH, ON-OFF TYPE
	MUSHROOM HEAD SWITCH
A	INDICATING LIGHT, PUSH-TO-TEST, LETTER INDICATES COLOR
A	INDICATING LIGHT - LETTER INDICATES COLOR A - AMBER G - GREEN S - STROBE B - BLUE R - RED C - CLEAR W - WHITE
ETM	ELAPSED TIME METER
M	MOTOR STARTER CONTACTOR COIL
CRX	CONTROL RELAY, X INDICATES NUMERICAL ORDER IN CIRCUIT
TDR X	TIME DELAY RELAY, X INDICATES NUMERICAL ORDER IN CIRCUIT
SV X	SOLENOID VALVE, X INDICATES NUMERICAL ORDER IN CIRCUIT
	CONTACT - NORMALLY OPEN
	CONTACT - NORMALLY CLOSED
	REMOTE DEVICE
	TIME DELAY RELAY CONTACT, NORMALLY OPEN, CLOSES WHEN ENERGIZED AND TIMED OUT
	TIME DELAY RELAY CONTACT, NORMALLY CLOSED, OPENS WHEN ENERGIZED AND TIMED OUT
	TIME DELAY RELAY CONTACT, CLOSES WHEN ENERGIZED, OPENS WHEN DE-ENERGIZED AND TIMED OUT
	TIME DELAY RELAY CONTACT, OPENS WHEN ENERGIZED, CLOSES WHEN DE-ENERGIZED AND TIMED OUT
	MOTOR SPACE HEATER
	TERMINAL BLOCK, REMOTE
	TERMINAL BLOCK, INTERNAL
	FUSED TERMINAL BLOCK
	FUSE, RATING INDICATED
CPT 120V	TRANSFORMER, CONTROL POWER
	THERMOCOUPLE

CONTROL DIAGRAMS-2

	CAPACITOR
+ −	BATTERY
	LIMIT SWITCH, NORMALLY OPEN, CLOSES AT END OF TRAVEL
	LIMIT SWITCH, NORMALLY CLOSED, OPENS AT END OF TRAVEL
	TEMPERATURE SWITCH, OPENS ON TEMPERATURE RISE
	TEMPERATURE SWITCH, CLOSES ON TEMPERATURE RISE
	FLOAT SWITCH, NORMALLY OPEN, CLOSES ON DESCENDING LEVEL
	FLOAT SWITCH, NORMALLY OPEN, CLOSES ON RISING LEVEL
	PRESSURE SWITCH, NORMALLY CLOSED, OPENS ON RISING PRESSURE
	PRESSURE SWITCH, NORMALLY OPEN, CLOSES ON RISING PRESSURE
	FLOW SWITCH, CLOSES ON INCREASED FLOW
	FLOW SWITCH, OPENS ON INCREASED FLOW

GROUND SYSTEM PLAN

	GROUND ROD
	GROUND ROD IN TEST WELL
G	GROUNDING CONDUCTOR, SIZE AS INDICATED
TA	CABLE TO CABLE TEE
XA	CABLE TO CABLE CROSS
	PLATE ADAPTER
XJ	CABLE TO REINFORCING STEEL
	GROUND ROD TO CABLE
	FLEXIBLE GROUND STRAP
GP	CABLE TO PIPE (BOLTED CONNECTION)
GF	CABLE TO FLAT
WA	CABLE TO STEEL SURFACE
SS	PARALLEL SPLICE
	PIGTAIL FOR CONNECTION TO EQUIPMENT CABINET OR FRAME
G	EQUIPMENT GROUND BUS
N	EQUIPMENT NEUTRAL BUS
LA	CABLE TO LUG

SYMBOL	DESCRIPTION

POWER SYSTEM PLAN-1

	CONNECTION POINT TO EQUIPMENT SPECIFIED. RACEWAY, CONDUCTOR,TERMINATION AND CONNECTION IN THIS DIVISION.
M	MOTOR, SQUIRREL CAGE INDUCTION
G	GENERATOR, VOLTAGE AND SIZE AS INDICATED.
LPXXA	HOME RUN - DESTINATION SHOWN
or G	EXPOSED CONDUIT AND CONDUCTORS
or G	CONCEALED CONDUIT AND CONDUCTORS
G	CROSSHATCHES WITH BAR INDICATE NO.10 CONDUCTOR. SIZE CONDUIT ACCORDING TO SPECIFICATIONS AND APPLICABLE CODE.
[ ]	CONDUIT AND CONDUCTOR CALLOUT, SEE ONE LINE DIAGRAM OR PLANS.
	CONDUIT DOWN
	CONDUIT UP
	CONDUIT, STUBBED AND CAPPED
	CONDUIT TERMINATION AT CABLE TRAY
EX	EXISTING CONDUIT/ DUCT BANK
BD	BUS DUCT - SEE SPECIFICATIONS
CE	CONCRETE ENCASED CONDUIT
DB	DIRECT BURIED CONDUIT
FO	FIBER OPTIC CONDUIT
T	TRANSFORMER
J or HH	GENERAL CONTROL OR WIRING DEVICE. LETTER SYMBOLS OR ABBREVIATIONS INDICATE TYPE OF DEVICE
CS	CONTROL STATION, SEE CONTROL DIAGRAMS FOR CONTROL DEVICE(S) REQUIRED.
30	NONFUSED DISCONNECT SWITCH, CURRENT RATING INDICATED, 3 POLE
60/40 F	FUSED DISCONNECT SWITCH, CURRENT RATING INDICATED (60/40, 60=SWITCH RATING / 40=FUSE RATING) 3 POLE
2	COMBINATION CIRCUIT BREAKER AND MAGNETIC STARTER, NEMA SIZE INDICATED

NOTES:

1. THESE ARE STANDARD LEGEND SHEETS. SOME SYMBOLS AND ABBREVIATIONS MAY APPEAR ON THE LEGEND AND NOT ON THE DRAWINGS.
2. FOR ADDITIONAL ABBREVIATIONS OF OTHER DIVISIONS (HVAC, MECHANICAL, AND STRUCTURAL/ARCHITECTURAL) SEE OTHER LEGENDS.

NO.	DATE	REVISION	BY	APVD

DSGN D NICHOLSON | DR N ADAMS | CHK | APVD

CH2MHILL®
3011 S.W. WILLISTON ROAD
GAINESVILLE, FLORIDA 32608
EB0000072 AAC001992
David C. Nicholson PE 60201

NORTH SIMONTON STORMWATER
EMERGENCY OUTFALL
CITY OF KEY WEST
KEY WEST, FLORIDA

GENERAL

ELECTRICAL LEGEND

NTS
VERIFY SCALE
BAR IS ONE INCH ON ORIGINAL DRAWING.
0 1"

DATE	MARCH 2014
PROJ	476166
DWG	G-03
SHEET	ShtNum of ShtTot

BID DOCUMENTS

REUSE OF DOCUMENTS: THIS DOCUMENT, AND THE IDEAS AND DESIGNS INCORPORATED HEREIN, AS AN INSTRUMENT OF PROFESSIONAL SERVICE, IS THE PROPERTY OF CH2M HILL AND IS NOT TO BE USED, IN WHOLE OR IN PART, FOR ANY OTHER PROJECT WITHOUT THE WRITTEN AUTHORIZATION OF CH2M HILL.

©CH2M HILL 2014. ALL RIGHTS RESERVED.

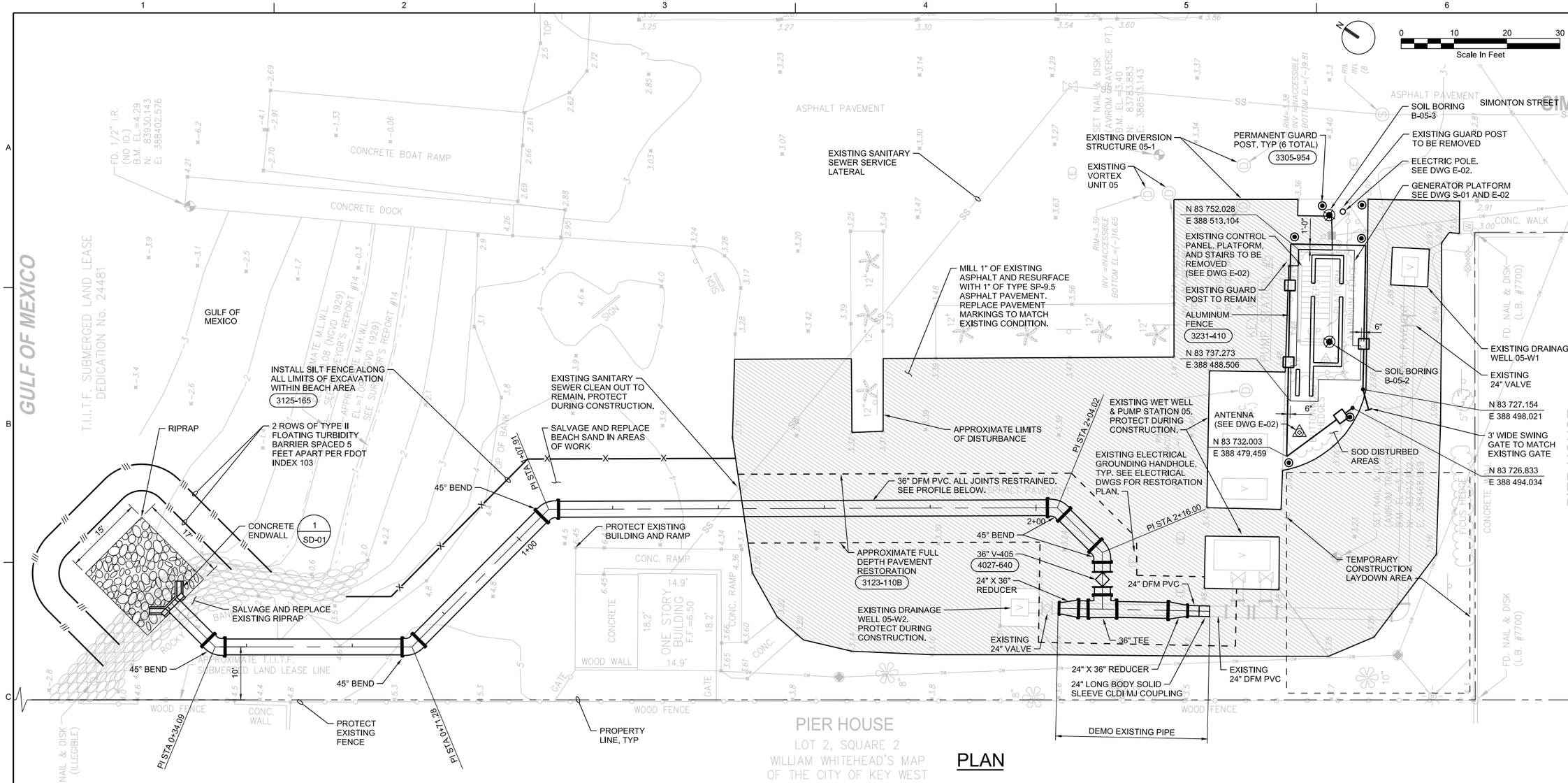

PLAN

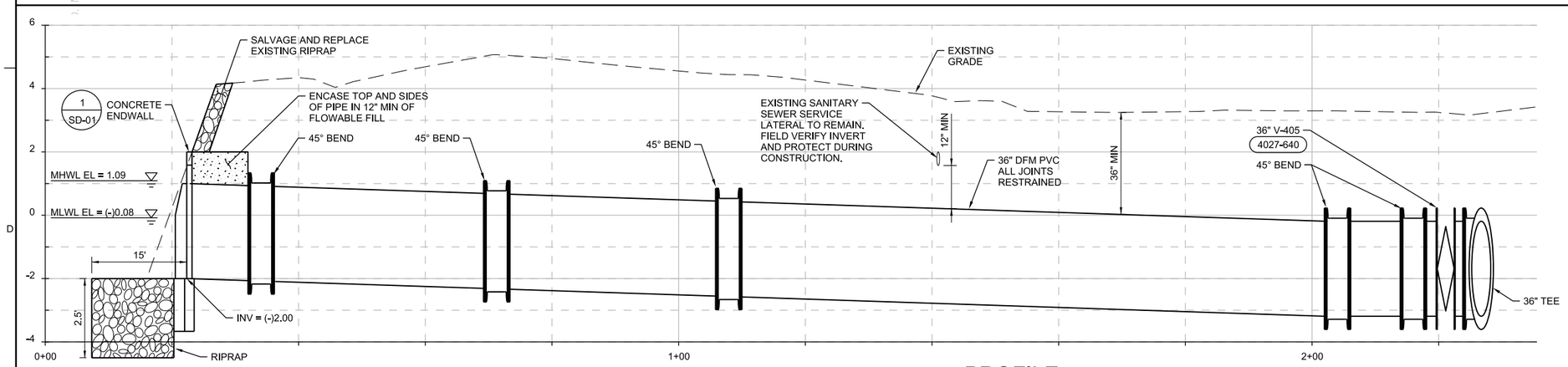

PROFILE

SCALE: 1" = 10' HORIZ
1" = 5' VERT

NO.	DATE	REVISION	BY	APVD

DSGN R MORRISON | DR R MORRISON | CHK A MALONE | APVD R MORRISON

3011 S.W. WILLISTON ROAD
GAINESVILLE, FLORIDA 32608
EB0000072 AAC001992
Richard Thomas Morrison PE 67713

NORTH SIMONTON STORMWATER
EMERGENCY OUTFALL
CITY OF KEY WEST
KEY WEST, FLORIDA

CH2MHILL®

CIVIL

SITE PLAN

1" = X'

VERIFY SCALE

BAR IS ONE INCH ON ORIGINAL DRAWING.
0 1"

DATE	MARCH 2014
PROJ	476166
DWG	C-01
SHEET	ShtNum of ShtTot

BID DOCUMENTS

REUSE OF DOCUMENTS: THIS DOCUMENT, AND THE IDEAS AND DESIGNS INCORPORATED HEREIN, AS AN INSTRUMENT OF PROFESSIONAL SERVICE IS THE PROPERTY OF CH2M HILL AND IS NOT TO BE USED, IN WHOLE OR IN PART, FOR ANY OTHER PROJECT WITHOUT THE WRITTEN AUTHORIZATION OF CH2M HILL.

©CH2M HILL 2014. ALL RIGHTS RESERVED.

NOTES:

1. PLATFORM HAS BEEN DESIGNED FOR A GENERATOR WITH MAXIMUM PLAN DIMENSION OF 204 INCHES BY 72 INCHES. CONTRACTOR SHALL VERIFY SIZE BEFORE CONSTRUCTION AND SHALL NOTIFY ENGINEER OF RECORD IF ALLOWABLE PLAN SIZE HAS BEEN EXCEEDED.
2. ANCHOR GENERATOR TO PLATFORM WITH 1/2" DIAMETER TYPE 316 SST ADHESIVE ANCHORS AT A 2'-0" MAX SPACING ALL AROUND GENERATOR. ANCHOR EMBEDMENT SHALL BE 4 1/2". ADHESIVE SYSTEM SHALL BE HILTI HIT-RE 500-SD. CONTRACTOR SHALL COORDINATE WITH GENERATOR MANUFACTURER FOR LOCATION OF HOLES IN GENERATOR BASE.
3. CONTRACTOR TO PROVIDE A RUB FINISH TO ALL CONCRETE.
4. BASE FLOOD ELEVATION ZONE VE IS ELEVATION 10.00 NGVD 29

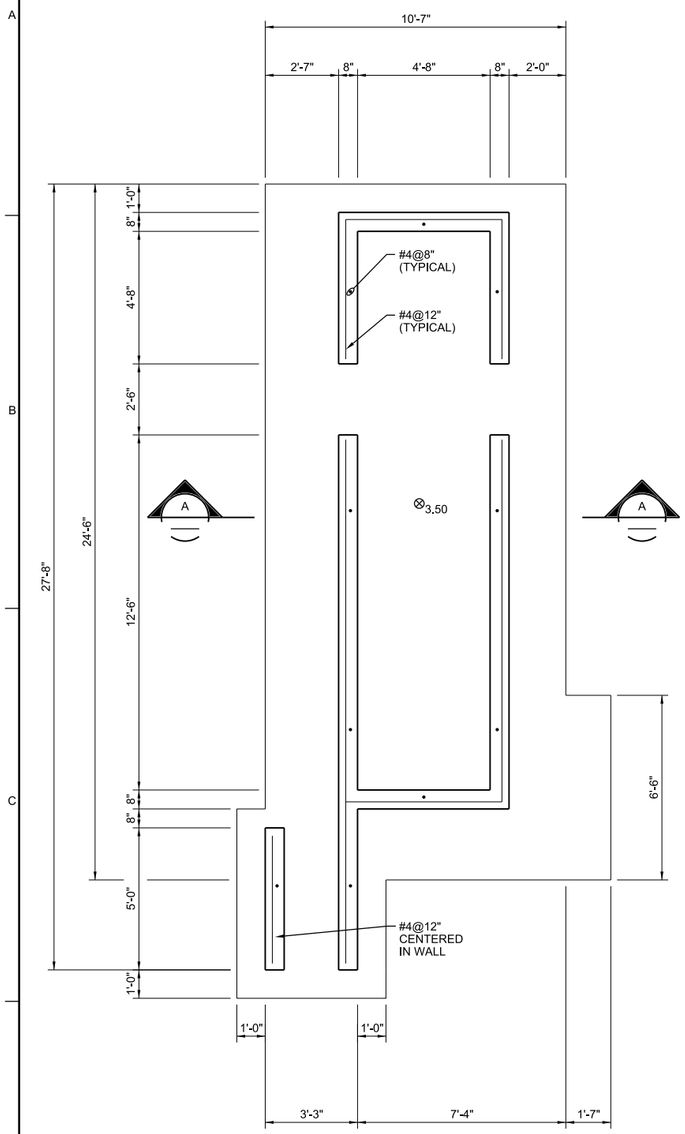

FOUNDATION PLAN

3/8"=1'-0"

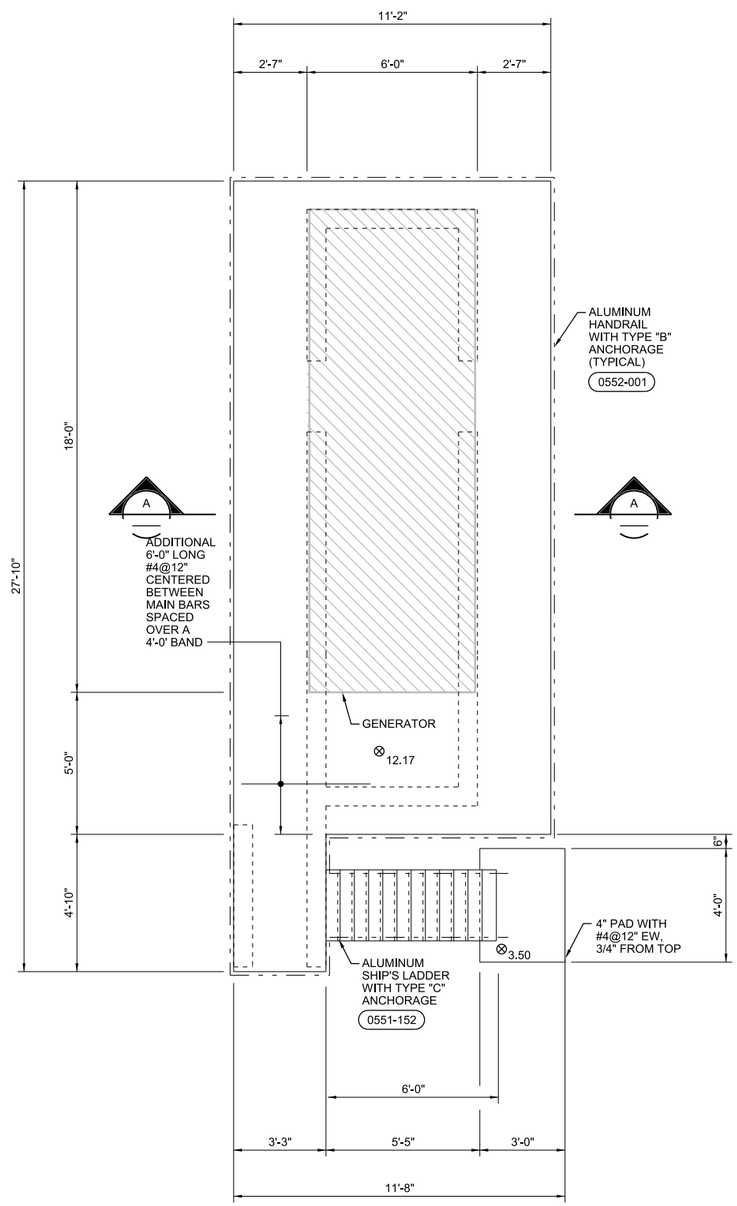

TOP PLAN

3/8"=1'-0"

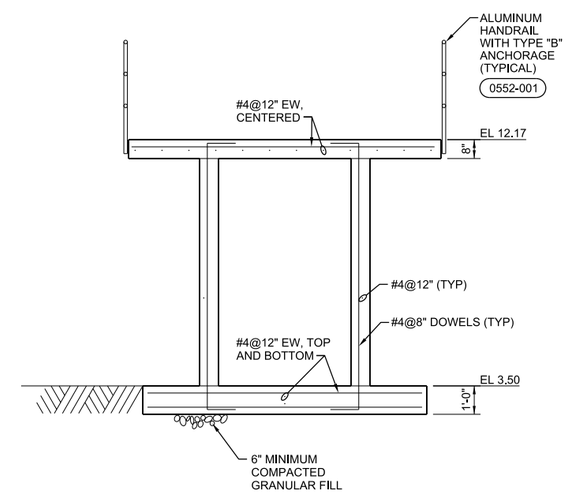

A SECTION

3/8"=1'-0"

NO.	DATE	REVISION	BY	APVD

DSGN S TROYAN | DR J THORNTON | CHK | CHECKED-BY | APVD

SEALNAME

©CH2M HILL 2014, ALL RIGHTS RESERVED.

3011 S.W. WILLISTON ROAD
GAINESVILLE, FLORIDA 32608
EB0000072 AAC001992
Delayne Lange PE 70194

NORTH SIMONTON STORMWATER
EMERGENCY OUTFALL
CITY OF KEY WEST
KEY WEST, FLORIDA

CH2MHILL®

STRUCTURAL
PLATFORM
PLAN AND SECTION

REUSE OF DOCUMENTS: THIS DOCUMENT, AND THE IDEAS AND DESIGNS INCORPORATED HEREIN, AS AN INSTRUMENT OF PROFESSIONAL SERVICE IS THE PROPERTY OF CH2M HILL AND IS NOT TO BE USED, IN WHOLE OR IN PART, FOR ANY OTHER PROJECT WITHOUT THE WRITTEN AUTHORIZATION OF CH2M HILL.

AS NOTED

VERIFY SCALE

BAR IS ONE INCH ON ORIGINAL DRAWING.
0 1"

DATE	MARCH 2014
PROJ	476166
DWG	S-01
SHEET	X of X

BID DOCUMENTS

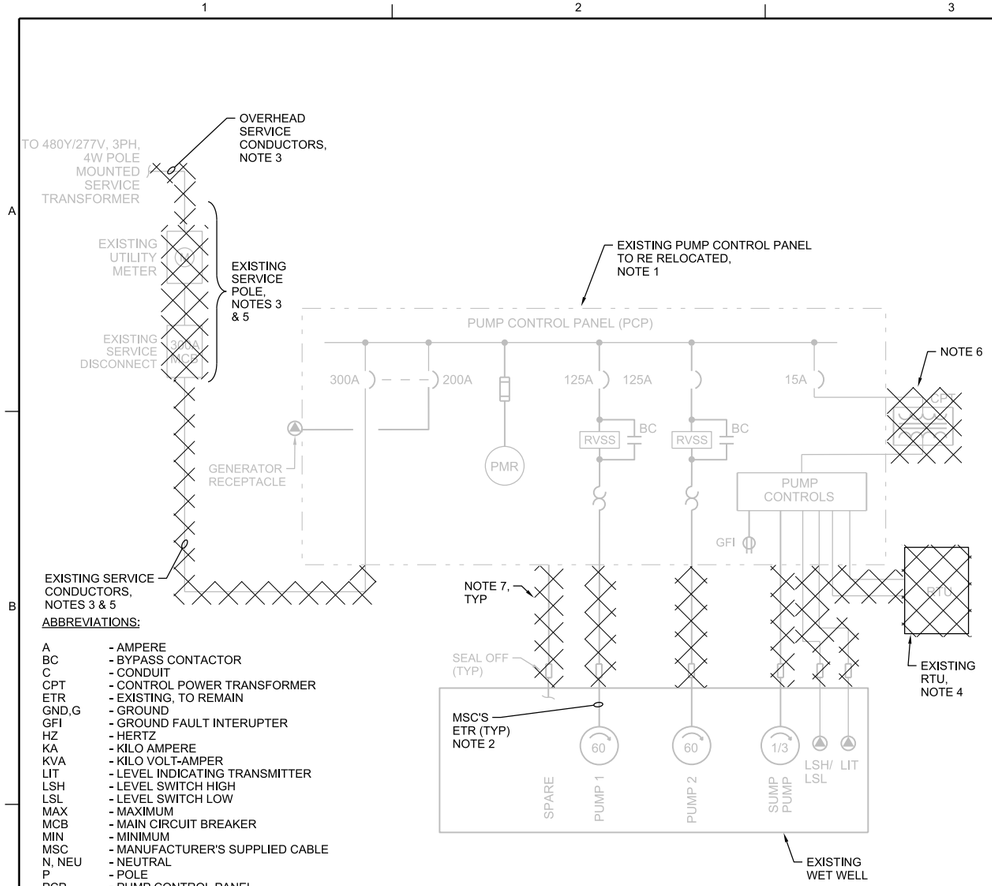

ABBREVIATIONS:

A	- AMPERE
BC	- BYPASS CONTACTOR
C	- CONDUIT
CPT	- CONTROL POWER TRANSFORMER
ETR	- EXISTING, TO REMAIN
GND,G	- GROUND
GFI	- GROUND FAULT INTERUPTER
HZ	- HERTZ
KA	- KILO AMPERE
KVA	- KILO VOLT-AMPER
LIT	- LEVEL INDICATING TRANSMITTER
LSH	- LEVEL SWITCH HIGH
LSL	- LEVEL SWITCH LOW
MAX	- MAXIMUM
MCB	- MAIN CIRCUIT BREAKER
MIN	- MINIMUM
MSC	- MANUFACTURER'S SUPPLIED CABLE
N, NEU	- NEUTRAL
P	- POLE
PCP	- PUMP CONTROL PANEL
P.F.	- POWER FACTOR
PH	- PHASE
PMR	- POWER MONITORING RELAY
RTU	- REMOTE TELEMATRY UNIT
SHLD	- SHIELD
SIC	- SYMETRICAL INTERUPTING CURRENT
S/S, SST	- STAINLESS STEEL
TJB	- TERMINAL JUNCTION BOX
TYP	- TYPICAL
V	- VOLTS
W	- WATTS, WIRE

ONE LINE DIAGRAM

EXISTING CONDITIONS

NOTES:

1. EXISTING PUMP CONTROL PANEL (PCP) TO BE RELOCATED, CONTRACTOR SHALL MOVE PCP TO TEMPORARY LOCATION UNTIL NEW GENERATOR PLATFORM IS CONSTRUCTED. PUMP STATION SHALL REMAIN OPERATIONAL, CONTRACTOR SHALL PROVIDE TEMPORARY SUPPORT FOR PCP PLUS MAKE TEMPORARY WIRING CONNECTIONS REQUIRED TO RESTORE EXISTING PUMP STATION FUNCTIONS.
2. EXISTING SUBMERSIBLE PUMPS AND LEVEL CONTROLS TO REMAIN. MANUFACTURER'S SUPPLIED CABLES TO EXISTING PUMPS AND CONTROLS TO BE RETAINED AND RE-CONNECTED TO RELOCATED PCP. PROTECT CABLES FROM DAMAGE. PROVIDE TEMPORARY CONNECTIONS TO PCP TEMPORARY LOCATION. CABLES TO BE ROUTED TO FINAL PCP LOCATION VIA NEW TJB'S.
3. EXISTING SERVICE POLE TO BE MOVED AWAY FROM NEW GENERATOR PLATFORM. PROVIDE NEW OVERHEAD CONDUCTORS, REVENUE METER, RISE, CONDUIT AND SERVICE CONDUCTORS. SEE DRAWINGS E-02, E-03 AND E-04 FOR ADDITIONAL REQUIREMENTS. COORDINATE SERVICE POLE RELOCATION WITH KEYS ENERGY.
4. REMOVE EXISTING RTU. RELOCATE EXISTING ANTENNA MAST AND ANTENNA PER DRAWINGS E-02, E-03 AND E-04.
5. DISCONNECT, REMOVE AND DISPOSE OF SERVICE ENTRANCE CONDUCTORS BETWEEN KEYS ENERGY SERVICE POLE, REVENUE METER, MAIN BREAKER AND EXISTING PUMP CONTROL PANEL. REMOVE AND TURNOVER TO CLIENT EXISTING POLE MOUNTED SERVICE DISCONNECT.
6. EXISTING CONTROL POWER TRANSFORMER (CPT) TO BE REMOVED AND REPLACED WITH MINI POWER CENTER. TURN OVER EXISTING CPT TO OWNER.
7. REMOVE EXISTING CONDUIT SEALS AND ABOVE GRADE CONDUITS INCOMING FROM THE WET WELL TO THE PUMP CONTROL PANEL. CAP THE END OF ALL CONDUITS DURING DEMO.
8. UNDERGROUND PORTIONS OF EXISTING WET WELL EQUIPMENT RACEWAYS TO REMAIN. SEE DRAWINGS E-02, E-03 AND E-04.
9. PORTION OF EXISTING GROUND GRID TO BE REMOVED FOR INSTALLATION OF NEW PIPELINE.
10. PORTION OF EXISTING GROUND GRID TO BE REMOVED FOR INSTALLATION OF NEW GENERATOR PLATFORM.

LEGEND:

TO BE REMOVED

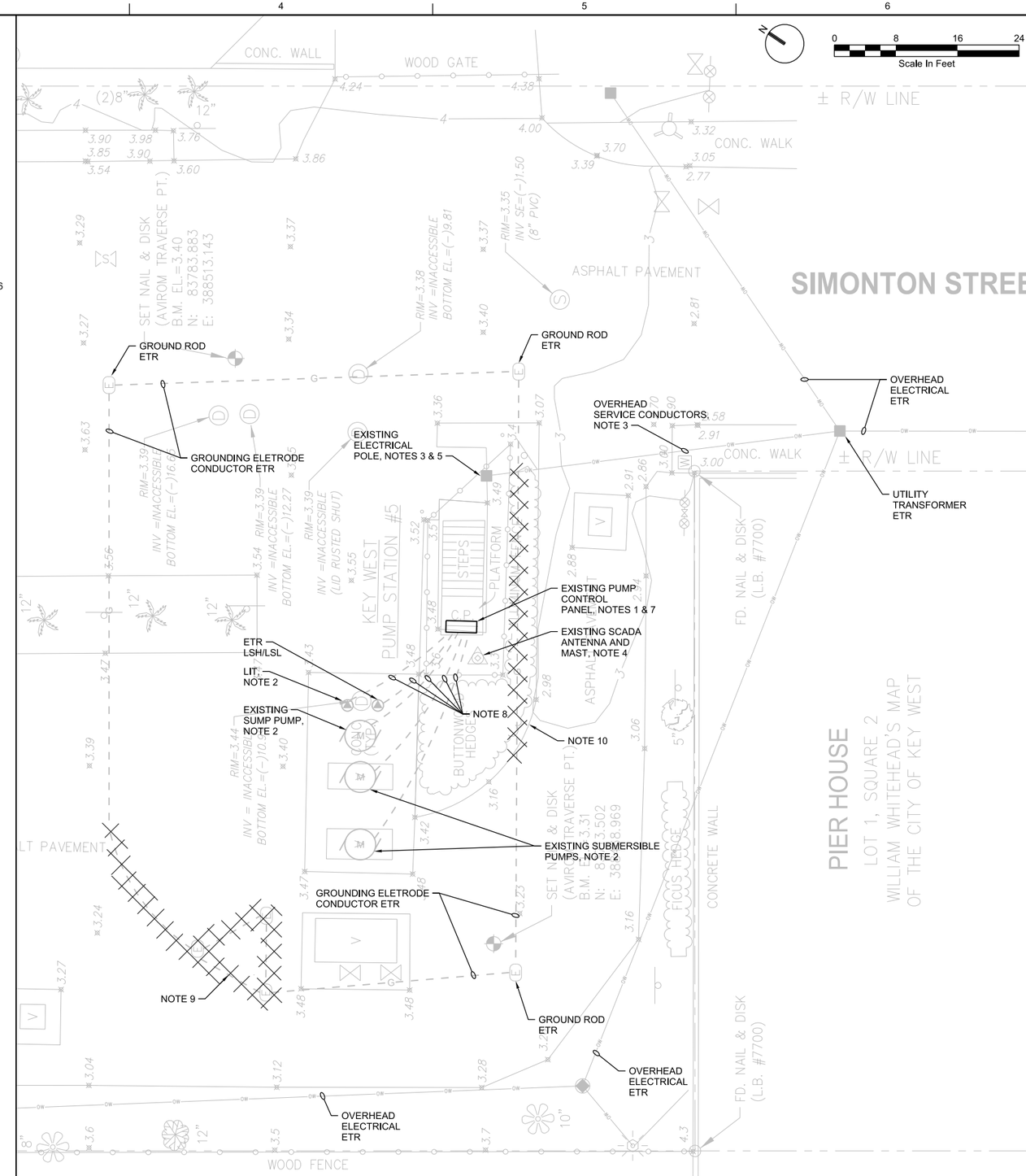

GENERAL CODE NOTE:

EXISTING WET WELL INSTALLATION IS NOT BEING UPGRADED AS A COMPONENT OF THIS PROJECT, WITH NO ADDITIONS OR MODIFICATIONS INCLUDED. INSTALLATION WITHIN WET WELL SHALL CONTINUE TO COMPLY WITH CODES AND STANDARDS APPLICABLE AT TIME OF ORIGINAL CONSTRUCTION.

PLAN

1/8"=1'-0"
EXISTING CONDITIONS

NO.	DATE	REVISION	BY	APVD

DSGN D NICHOLSON | DR N ADAMS | CHK | APVD

CH2MHILL®
3011 S.W. WILLISTON ROAD
GAINESVILLE, FLORIDA 32608
EB0000072 AAC001992
David C. Nicholson PE 60201

NORTH SIMONTON STORMWATER
EMERGENCY OUTFALL
CITY OF KEY WEST
KEY WEST, FLORIDA

ELECTRICAL

SITE PLAN
EXISTING CONDITIONS

1/8" = 1'-0"
VERIFY SCALE
BAR IS ONE INCH ON ORIGINAL DRAWING.
0 1"

DATE	MARCH 2014
PROJ	476166
DWG	E-01
SHEET	ShtNum of ShtTot

BID DOCUMENTS

REUSE OF DOCUMENTS: THIS DOCUMENT, AND THE IDEAS AND DESIGNS INCORPORATED HEREIN, AS AN INSTRUMENT OF PROFESSIONAL SERVICE IS THE PROPERTY OF CH2M HILL AND IS NOT TO BE USED, IN WHOLE OR IN PART, FOR ANY OTHER PROJECT WITHOUT THE WRITTEN AUTHORIZATION OF CH2M HILL.
©CH2M HILL 2014. ALL RIGHTS RESERVED.

NOTES:

1. RELOCATE ELECTRICAL SERVICE POLE TO LOCATION SHOWN. COORDINATE LOCATION WITH KEYS ENERGY AND EXISTING BALLARDS. REPLACE EXISTING OVERHEAD CONDUCTORS IN KIND, AND PROVIDE NEW REVENUE METER, RISER, CONDUIT AND SERVICE CONDUCTORS TO NEW SERVICE ENTRANCE BREAKER. SEE DRAWING E-04 FOR ADDITIONAL REQUIREMENTS.
2. RE-CONNECT EXISTING WET WELL PUMPS TO RE-LOCATED PUMP CONTROL PANEL. SEE DRAWINGS E-03 & E-04 FOR ADDITIONAL REQUIREMENTS.
3. RE-CONNECT EXISTING WET WELL LEVEL CONTROLS TO RE-LOCATED PUMP CONTROL PANEL. SEE DRAWINGS E-03 & E-04 FOR ADDITIONAL REQUIREMENTS.
4. SEE DRAWING E-01 FOR ABBREVIATIONS.
5. EXOTHERMICALLY BOND EXISTING GROUNDING ELECTRODE CONDUCTOR TO NEW GROUND ROD.
6. EXOTHERMICALLY BOND EXISTING GROUNDING ELECTRODE CONDUCTOR TO NEW GROUND ELECTRODE CONDUCTOR WITH PARALLEL SPLICE.
7. TO NEW GROUND GRID SEE DRAWING E-03 FOR CONTINUATION.

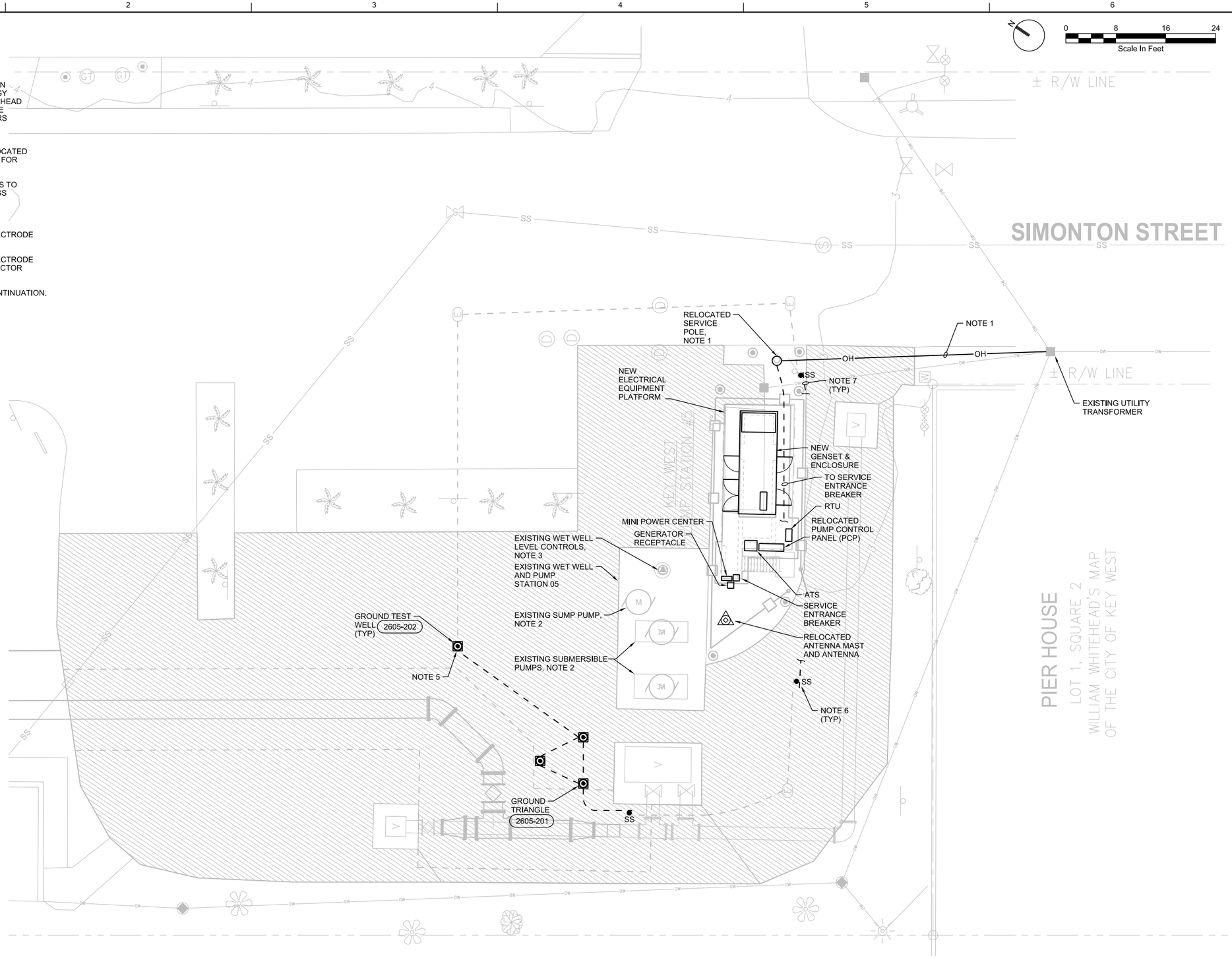

GENERAL CODE NOTE:

EXISTING WET WELL INSTALLATION IS NOT BEING UPGRADED AS A COMPONENT OF THIS PROJECT, WITH NO ADDITIONS OR MODIFICATIONS INCLUDED. INSTALLATION WITHIN WET WELL SHALL CONTINUE TO COMPLY WITH CODES AND STANDARDS APPLICABLE AT TIME OF ORIGINAL CONSTRUCTION.

PLAN

1/8"=1'-0"

NO.	DATE	REVISION	BY	APVD

DSGN D NICHOLSON | DR N ADAMS | CHK | APVD

CH2MHILL®
3011 S.W. WILLISTON ROAD
GAINESVILLE, FLORIDA 32608
EB0000072 AAC001992
David C. Nicholson PE 60201

NORTH SIMONTON STORMWATER EMERGENCY OUTFALL
CITY OF KEY WEST
KEY WEST, FLORIDA

ELECTRICAL

SITE PLAN
PROPOSED MODIFICATIONS

1/8" = 1'-0"
VERIFY SCALE
BAR IS ONE INCH ON ORIGINAL DRAWING.
0 1"

DATE	MARCH 2014
PROJ	476166
DWG	E-02
SHEET	ShtNum of ShtTot

BID DOCUMENTS

REUSE OF DOCUMENTS: THIS DOCUMENT, AND THE IDEAS AND DESIGNS INCORPORATED HEREIN, AS AN INSTRUMENT OF PROFESSIONAL SERVICE IS THE PROPERTY OF CH2M HILL AND IS NOT TO BE USED, IN WHOLE OR IN PART, FOR ANY OTHER PROJECT WITHOUT THE WRITTEN AUTHORIZATION OF CH2M HILL.
©CH2M HILL 2014. ALL RIGHTS RESERVED.

NOTES:

1. EXOTHERMICALLY BOND STRUCTURAL STEEL IN PLATFORM FOUNDATION WITH GROUNDING ELECTRODE CONDUCTOR.
2. CONNECT TO EXISTING WET WELL GROUND GRID. SEE DRAWING E-02 FOR CONTINUATION.
3. #2/0 XHHW COPPER GROUND ROUTE UP TO HANDRAIL. PROVIDE BONDING JUMPERS SO THAT THE HANDRAIL IS ELECTRICALLY CONTINUOUS.
4. PROVIDE GROUND CONNECTION AT STAIRS AND HANDRAILS.
5. EXISTING SUBMERSIBLE PUMPS TO REMAIN. RE-ROUTE EXISTING PUMP MSC'S TO NEW TJB'S. INTERCEPT EXISTING UNDERGROUND CONDUIT AND PROVIDE NEW PVC-COATED GRS CONDUIT TO EXTEND CONDUITS TO NEW TJBS. ROUTE MSC FROM WET WELL TO TJBS.
6. EXISTING LEVEL SWITCHES AND ULTRASONIC LEVEL ELEMENT TO REMAIN. RE-ROUTE EXISTING LEVEL ELEMENT MSC TO NEW LOCATION OF PCP VIA TJB. RE-ROUTE EXISTING LEVEL SWITCH MSC'S TO NEW TJB. INTERCEPT EXISTING UNDERGROUND CONDUIT AND PROVIDE NEW PVC-COATED GRS CONDUIT TO EXTEND CONDUITS TO NEW TJBS. ROUTE MSC FROM WET WELL TO TJBS.
7. FURNISH INSTALL AND CONNECT NEW CONDUIT SEALS, TERMINAL JUNCTION BOXES (TJBS) AND CONDUITS, TO EXTEND EXISTING CONDUITS FROM THE WET WELL TO THE RELOCATED PUMP CONTROL PANEL. SEE DRAWING E-04 FOR MORE INFORMATION. ADJUST THE LOCATED OF THE EXISTING CONDUITS AS REQUIRED FOR CONNECTION TO NEW TJBS.
8. TRANSITION FROM THE EXISTING MSC TO THE INDIVIDUAL CONDUCTORS INSIDE TJBS WITH SUBMERSIBLE POWER DISTRIBUTION BLOCKS. SEE DRAWING E-04 FOR MORE INFORMATION. COIL EXCESS MSC CABLES INSIDE TJBS.
9. SEE SPECIFICATION 40 90 01, INSTRUMENTATION AND CONTROL FOR PROCESS SYSTEMS, FOR NEW RTU AND ANTENNA RELOCATION REQUIREMENTS.
10. ALL CONNECTIONS TO GROUNDING ELECTRODE CONDUCTOR TO BE EXOTHERMIC.
11. ROUTE ALL RACEWAYS INTERCONNECTING PLATFORM MOUNTED ELECTRICAL EQUIPMENT, UNDERNEATH PLATFORM, PER DETAIL (2605-300) AND NOT ALONG HANDRAILS. DO NOT EMBED CONDUIT RUNS IN PLATFORM OR SLAB.
12. MECHANICALLY CONNECT THE GROUND BUSSES IN ATS, SERVICE ENTRANCE CIRCUIT BREAKER, GENERATOR BREAKER, PUMP CONTROL PANEL, MINI POWER CENTER, AND RTU TO THE GROUNDING ELECTRODE CONDUCTOR AS SHOWN. USE #2/0 XHHW INSULATED COPPER CONDUCTOR.
13. COORDINATE WITH STRUCTURAL TO ENSURE GENERATOR AND PLATFORM ANCHOR POINTS MATCH.
14. ENSURE THAT GENERATOR ACCESS DOORS OPERATE UNOBSTRUCTED THROUGH THEIR FULL RANGE OF MOTION BEFORE INSTALLING PLATFORM EQUIPMENT. ADVISE ENGINEER OF ANY CONFLICTS. ADVICE ALSO OF ANY NEC CLEARANCE REQUIREMENT CONFLICTS.
15. ALL RACEWAYS TO BE THREADED PVC-COATED RGS, EXCEPT WHERE REQUIRED FOR VIBRATION MITIGATION. REFER TO SPECIFICATION SECTION 26 05 01, ELECTRICAL. MAINTAIN 12" CLEARANCE FROM CONFLICTING UNDERGROUND UTILITIES.
16. ROUTE ANTENNA CO-AXIAL CABLE RACEWAY DOWN SUPPORT FRAME, AND THEN UNDERGROUND. STUB RACEWAY UP AT ANTENNA FOUNDATION AS SHOWN IN DETAIL (4091-412) .PROVIDE AND INSTALL CABLE FITTING TO MINIMIZE ENTRY OF RAINWATER INTO CONDUIT.
17. MECHANICALLY BOND ALUMINUM FENCE WITH GROUNDING ELECTRODE SYSTEM, AS SHOWN.
18. CONNECT ALL MOUNTING RACKS TO GROUNDING ELECTRODE SYSTEM.
19. CONNECT GENERATOR ENCLOSURE/BASE TANK TO GROUNDING ELECTRODE SYSTEM, AS SHOWN.
20. ENSURE ALL CLEARANCES SATISFY NEC REQUIREMENTS, AND ARE SATISFACTORY TO ALLOW FULL RANGE OF MOTION FOR ALL DOORS ON PLATFORM-MOUNTED EQUIPMENT. ADVISE ENGINEER OF ANY CONFLICTS.
21. MOUNT ATS WITH TOP OF ENCLOSURE 6'-0" ABOVE PLATFORM FLOOR.
22. MOUNT SERVICE ENTRANCE CIRCUIT BREAKER WITH TOP OF ENCLOSURE 4'-6" ABOVE PLATFORM FLOOR.
23. MOUNT MINI POWER CENTER WITH TOP OF ENCLOSURE 4'-6" ABOVE PLATFORM FLOOR.
24. FLOOR-MOUNT AND DETAIL (4091-402) MOUNT PUMP CONTROL PANEL.
25. GENERATOR RECEPTACLE MOUNTED 5'-0" AFG USING DETAIL (2605-008b) .
26. SEE DRAWING E-01 FOR ABBREVIATIONS.

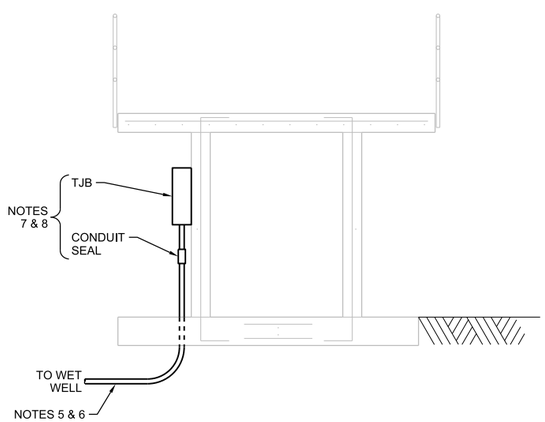

A SECTION
3/8"=1'-0"

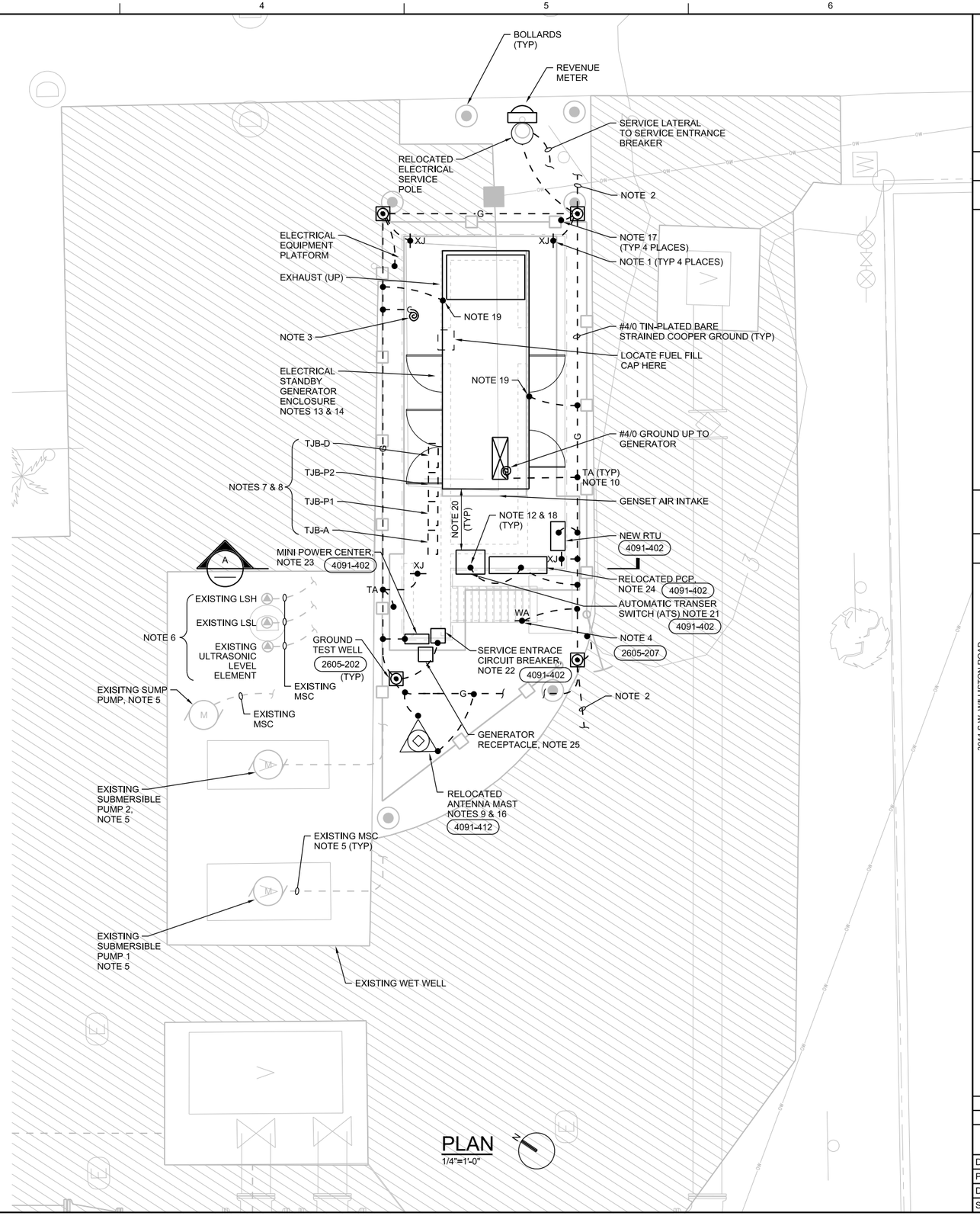

PLAN
1/4"=1'-0"

NO.	DATE	REVISION	BY	APVD

DSGN D NICHOLSON | DR N ADAMS | CHK | APVD

CH2MHILL®
3011 S.W. WILLISTON ROAD
GAINESVILLE, FLORIDA 32608
EB0000072 AAC001992
David C. Nicholson PE 60201

NORTH SIMONTON STORMWATER EMERGENCY OUTFALL
CITY OF KEY WEST
KEY WEST, FLORIDA

ELECTRICAL
PLAN
PROPOSED MODIFICATIONS

1/4" = 1'-0"
VERIFY SCALE
BAR IS ONE INCH ON ORIGINAL DRAWING.
0 1"

DATE	MARCH 2014
PROJ	476166
DWG	E-03
SHEET	ShtNum of ShtTot

BID DOCUMENTS

REUSE OF DOCUMENTS: THIS DOCUMENT, AND THE IDEAS AND DESIGNS INCORPORATED HEREIN, AS AN INSTRUMENT OF PROFESSIONAL SERVICE, IS THE PROPERTY OF CH2M HILL AND IS NOT TO BE USED, IN WHOLE OR IN PART, FOR ANY OTHER PROJECT WITHOUT THE WRITTEN AUTHORIZATION OF CH2M HILL.
©CH2M HILL 2014. ALL RIGHTS RESERVED.

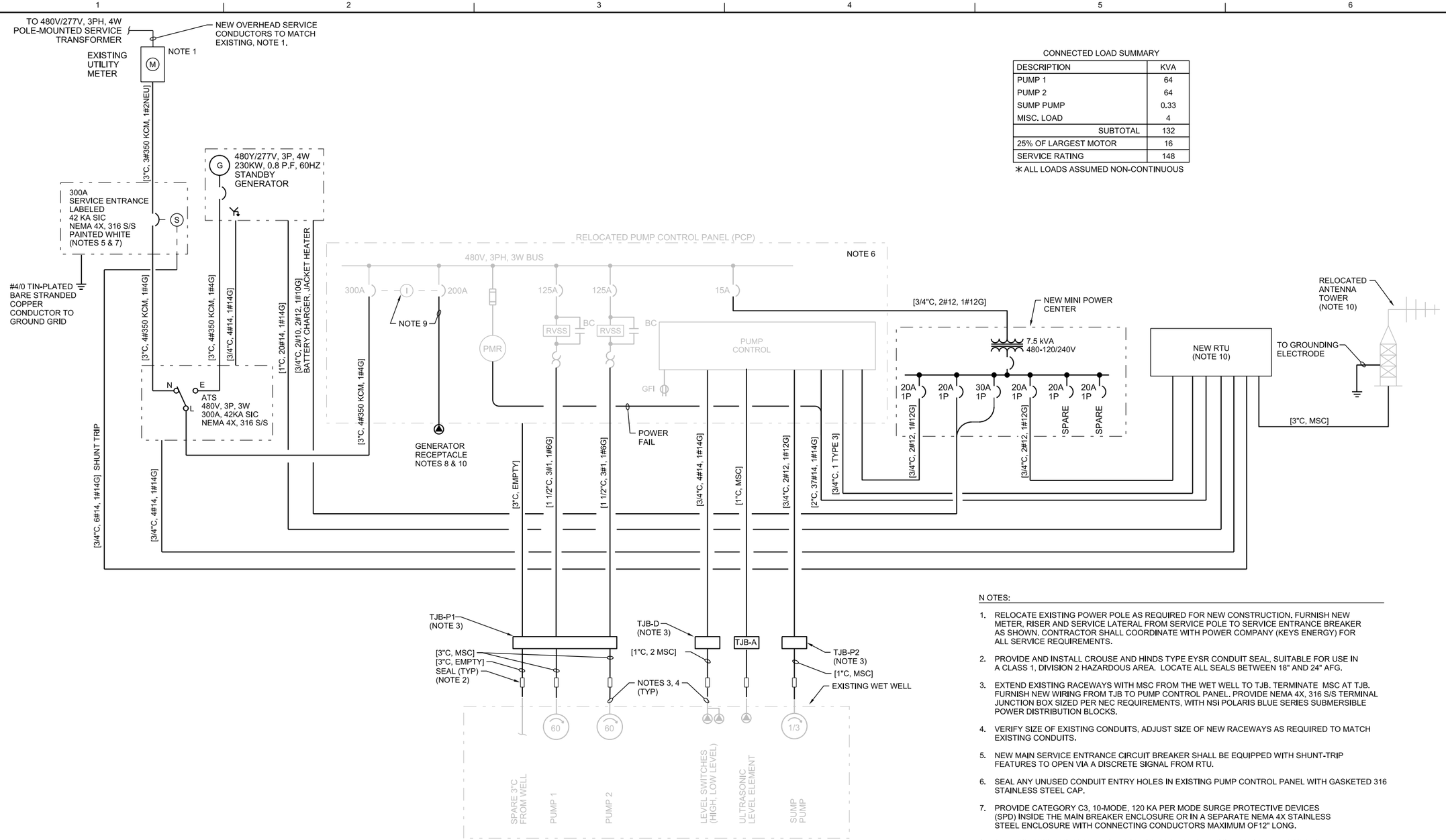

CONNECTED LOAD SUMMARY

DESCRIPTION	KVA
PUMP 1	64
PUMP 2	64
SUMP PUMP	0.33
MISC. LOAD	4
SUBTOTAL	132
25% OF LARGEST MOTOR	16
SERVICE RATING	148

∗ ALL LOADS ASSUMED NON-CONTINUOUS

RISER DIAGRAM

N OTES:

1. RELOCATE EXISTING POWER POLE AS REQUIRED FOR NEW CONSTRUCTION. FURNISH NEW METER, RISER AND SERVICE LATERAL FROM SERVICE POLE TO SERVICE ENTRANCE BREAKER AS SHOWN. CONTRACTOR SHALL COORDINATE WITH POWER COMPANY (KEYS ENERGY) FOR ALL SERVICE REQUIREMENTS.
2. PROVIDE AND INSTALL CROUSE AND HINDS TYPE EYSR CONDUIT SEAL, SUITABLE FOR USE IN A CLASS 1, DIVISION 2 HAZARDOUS AREA. LOCATE ALL SEALS BETWEEN 18" AND 24" AFG.
3. EXTEND EXISTING RACEWAYS WITH MSC FROM THE WET WELL TO TJB. TERMINATE MSC AT TJB. FURNISH NEW WIRING FROM TJB TO PUMP CONTROL PANEL. PROVIDE NEMA 4X, 316 S/S TERMINAL JUNCTION BOX SIZED PER NEC REQUIREMENTS, WITH NSI POLARIS BLUE SERIES SUBMERSIBLE POWER DISTRIBUTION BLOCKS.
4. VERIFY SIZE OF EXISTING CONDUITS, ADJUST SIZE OF NEW RACEWAYS AS REQUIRED TO MATCH EXISTING CONDUITS.
5. NEW MAIN SERVICE ENTRANCE CIRCUIT BREAKER SHALL BE EQUIPPED WITH SHUNT-TRIP FEATURES TO OPEN VIA A DISCRETE SIGNAL FROM RTU.
6. SEAL ANY UNUSED CONDUIT ENTRY HOLES IN EXISTING PUMP CONTROL PANEL WITH GASKETED 316 STAINLESS STEEL CAP.
7. PROVIDE CATEGORY C3, 10-MODE, 120 KA PER MODE SURGE PROTECTIVE DEVICES (SPD) INSIDE THE MAIN BREAKER ENCLOSURE OR IN A SEPARATE NEMA 4X STAINLESS STEEL ENCLOSURE WITH CONNECTING CONDUCTORS MAXIMUM OF12" LONG.
8. REPLACE EXISTING 200 AMP GENERATOR RECEPTACLE LOCATED ON THE EXISTING PUMP CONTROL PANEL WITH A 400 AMP GENERATOR RECEPTACLE TO BE REMOTELY LOCATED. COVER THE HOLE LEFT IN THE SIDE OF THE CONTROL PANEL FROM THE REMOVAL OF THE EXISTING GENERATOR RECEPTACLE WITH A GASKETED 316 STAINLESS STEEL CAP, PROVIDE NEW 400A LOAD-BREAKING GENERATOR RECEPTACLE WITH CAP, ANGLE ADAPTER, AND JUNCTION BOX. RUSSELSTOLL MAXGARD SERIES OR APPROVED EQUAL. COORDINATE GENERATOR RECEPTACLE PIN CONFIGURATION WITH OWNER'S GENERATOR PLUG.
9. THE GENERATOR CIRCUIT BREAKER TO BE INTERLOCKED WITH MAIN CIRCUIT BREAKER TO PREVENT BOTH CIRCUIT BREAKERS FROM BEING CLOSED AT THE SAME TIME. PROVIDE A 3" CONDUIT WITH 4#350KCM AND 1#4 GROUND FROM THE GENERATOR CIRCUIT BREAKER TO THE NEW 400A GENERATOR RECEPTACLE.
10. REFER TO SPECIFICATION SECTION 40 90 01, INSTRUMENTATION AND CONTROL FOR PROCESS SYSTEMS FOR NEW RTU AND ANTENNA RELOCATION REQUIREMENTS.
11. SEE DRAWING E-01 FOR ABBREVIATIONS.

NO.	DATE	REVISION	BY	APVD

DSGN D NICHOLSON | DR N ADAMS | CHK | CHECKED-BY APVD | SEALNAME

©CH2M HILL 2014, ALL RIGHTS RESERVED.

REUSE OF DOCUMENTS: THIS DOCUMENT, AND THE IDEAS AND DESIGNS INCORPORATED HEREIN, AS AN INSTRUMENT OF PROFESSIONAL SERVICE IS THE PROPERTY OF CH2M HILL AND IS NOT TO BE USED, IN WHOLE OR IN PART, FOR ANY OTHER PROJECT WITHOUT THE WRITTEN AUTHORIZATION OF CH2M HILL.

3011 S.W. WILLISTON ROAD
GAINESVILLE, FLORIDA 32608
EB0000072 AAC001992
David C. Nicholson PE 60201

NORTH SIMONTON STORMWATER
EMERGENCY OUTFALL
CITY OF KEY WEST
KEY WEST, FLORIDA

CH2MHILL®

ELECTRICAL

RISER DIAGRAM

NTS

VERIFY SCALE

BAR IS ONE INCH ON ORIGINAL DRAWING.
0 1"

DATE	MARCH 2014
PROJ	476166
DWG	E-04
SHEET	ShtNum of ShtTot

BID DOCUMENTS

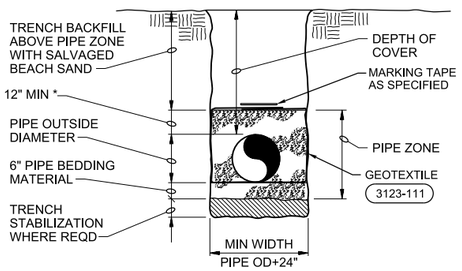

* OR TO ELEVATION +2.5 FEET NGVD, WHICHEVER IS HIGHER

TYPICAL TRENCH - BEACH AREA

NTS

3123-110A

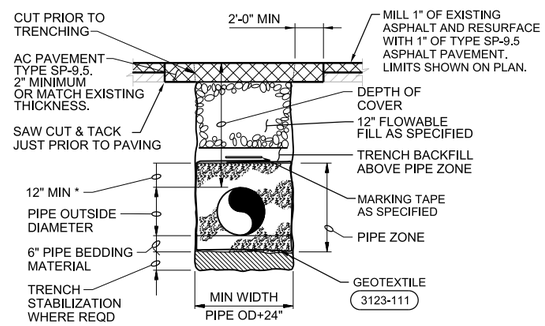

* OR TO ELEVATION +2.5 FEET NGVD, WHICHEVER IS HIGHER

TYPICAL TRENCH - PAVED AREA

NTS

3123-110B

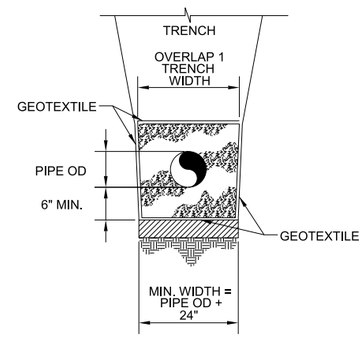

1. GEOTEXTILE MATERIAL AROUND ALL STORMWATER PIPES AND BOTTOM OF STRUCTURES, AND WHEN DIRECTED BY THE ENGINEER.

GEOTEXTILE WRAP OF PIPE ZONE

NTS

3123-111

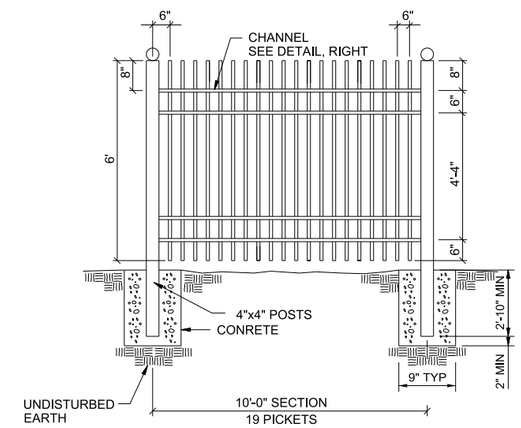

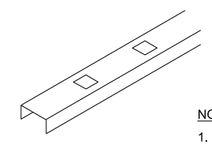

DETAIL

NOTES:

1. MATCH STYLE AND MATERIAL TO EXISTING FENCE.
2. CROWN CONCRETE AT POSTS.
3. MATCH GATE AND LATCH TO EXISTING.

ALUMINUM FENCE SECTION

NTS

3231-410

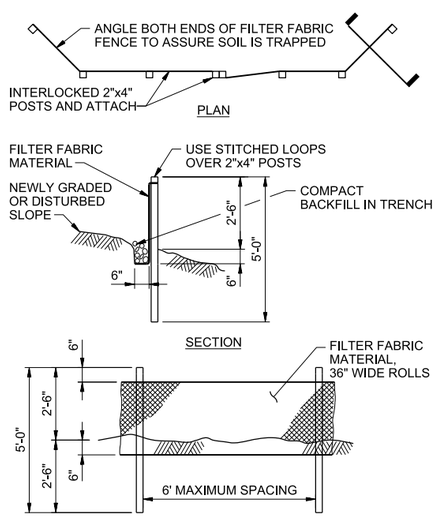

NOTES:

1. BURY BOTTOM OF FILTER FABRIC 6" VERTICALLY BELOW FINISHED GRADE.
2. 2"x4" WOOD OR STEEL FENCE POSTS.
3. STITCHED LOOPS TO BE INSTALLED DOWNHILL SIDE OF SLOPE.
4. COMPACT ALL AREAS OF FILTER FABRIC TRENCH.

SILT FENCE

NTS

3125-165

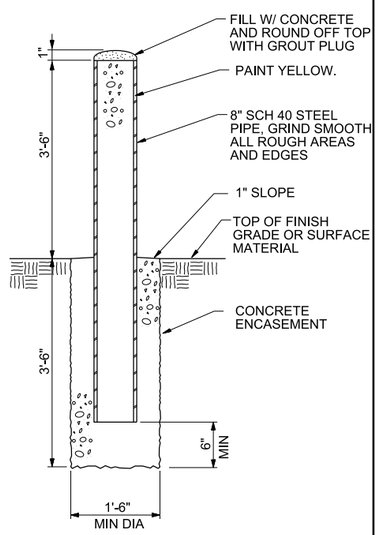

PERMANENT GUARD POST

NTS

3305-954

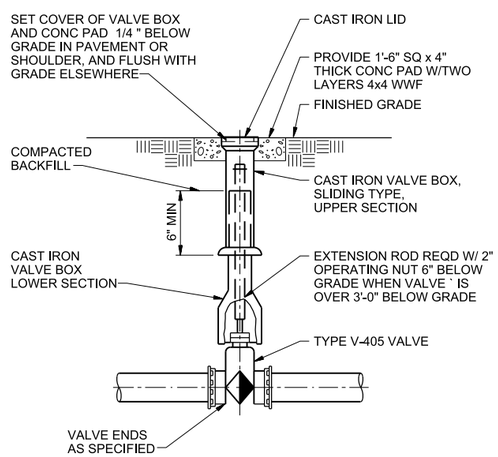

NOTES:

1. VERTICAL VALVE INSTALLATION FOR VALVES 12" AND SMALLER. FOR VALVES 16" AND LARGER INSTALL VALVE IN HORIZONTAL POSTION WITH RIGHT ANGLE GEARBOX ASSEMBLY.

BURIED PLUG VALVE BOX

NTS

4027-640

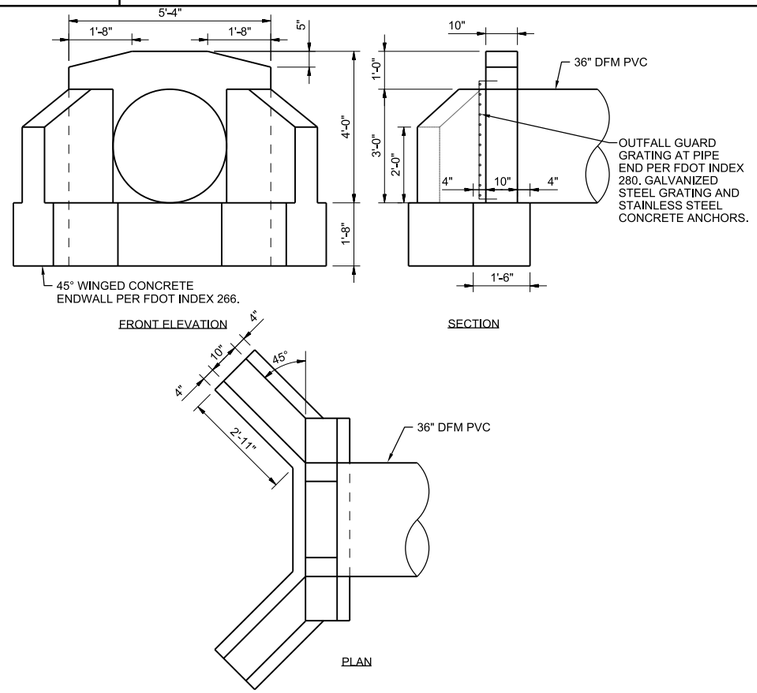

1 CONCRETE ENDWALL DETAIL

1"= 2'

NO.	DATE	REVISION	BY	APVD

DSGN R MORRISON | DR R MORRISON | CHK A MALONE | APVD R MORRISON

3011 S.W. WILLISTON ROAD
GAINESVILLE, FLORIDA 32608
EB0000072 AAC001992
Richard Thomas Morrison PE 67713

NORTH SIMONTON STORMWATER
EMERGENCY OUTFALL
CITY OF KEY WEST
KEY WEST, FLORIDA

CH2MHILL®

CIVIL

DETAILS

1" = X'

VERIFY SCALE

BAR IS ONE INCH ON ORIGINAL DRAWING.
0 1"

DATE	MARCH 2014
PROJ	476166
DWG	SD-01
SHEET	ShtNum of ShtTot

BID DOCUMENTS

REUSE OF DOCUMENTS: THIS DOCUMENT, AND THE IDEAS AND DESIGNS INCORPORATED HEREIN, AS AN INSTRUMENT OF PROFESSIONAL SERVICE, IS THE PROPERTY OF CH2M HILL AND IS NOT TO BE USED, IN WHOLE OR IN PART, FOR ANY OTHER PROJECT WITHOUT THE WRITTEN AUTHORIZATION OF CH2M HILL.

©CH2M HILL 2014. ALL RIGHTS RESERVED.

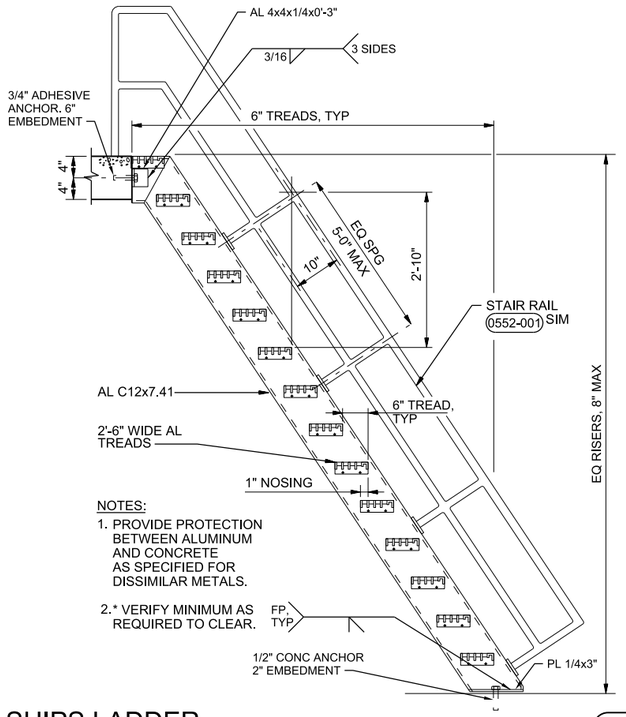

NOTES:

1. PROVIDE PROTECTION BETWEEN ALUMINUM AND CONCRETE AS SPECIFIED FOR DISSIMILAR METALS.
2. * VERIFY MINIMUM AS REQUIRED TO CLEAR.

SHIPS LADDER

NTS

0551-152

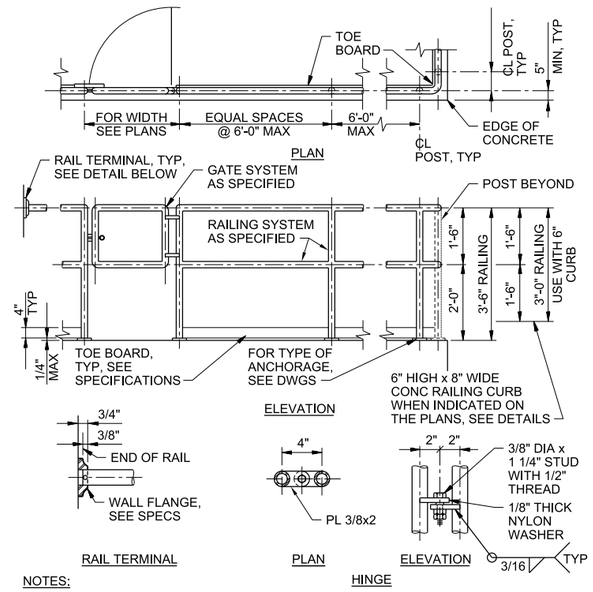

NOTES:

1. FASTEN RAIL TO WALL FLANGE PER MANUFACTURERS RECOMMENDATIONS.
2. WALL FLANGE TO BE MOUNTED TO WALL WITH (2) 3/8" DIA SST WEDGE ANCHORS.
3. AT CONTRACTOR'S OPTION FABRICATE HINGES OR PROVIDE OTHER HINGES AS SPECIFIED. ANODIZE FINISH AFTER ALL WELDING AS SPECIFIED.

RAILING - TWO RAIL - ALUMINUM

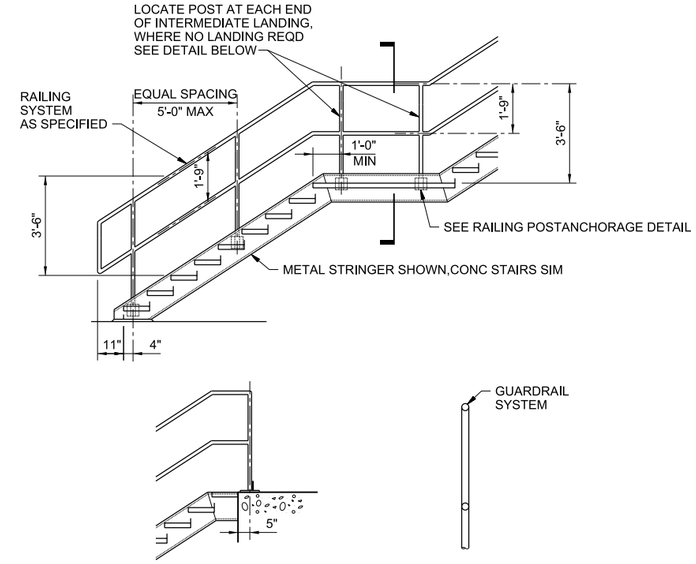

NOTES:

PROVIDE TOE BOARD AT LANDING WHERE REQUIRED.

RAILING - TWO RAIL - ALUMINUM (IBC)

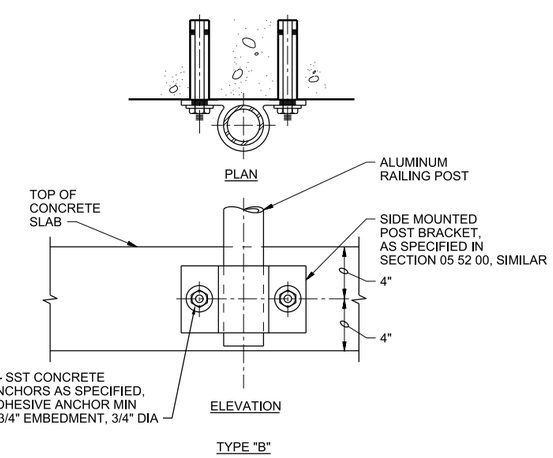

NOTES:

1. PROVIDE PROTECTION FOR DISSIMILAR METALS AND CONCRETE PER SPECIFICATIONS.
2. USE SIDE MOUNTED POST BRACKET AS A TEMPLATE FOR THE ANCHOR BOLTS.

RAILING POST ANCHORAGE TYPE B - ALUMINUM

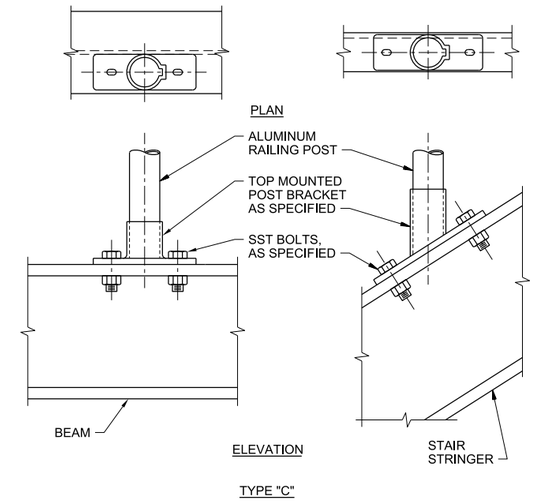

NOTES:

1. PROVIDE PROTECTION FOR DISSIMILAR METALS AND CONCRETE PER SPECIFICATIONS.
2. PROVIDE SST BEVELED WASHERS WHERE STRINGER FLANGES DO NOT PERMIT FULL CONTACT OF FASTENER AGAINST STRINGER SECTION.

RAILING POST ANCHORAGE TYPE C- ALUMINUM

RAILING DETAILS

NTS

0552-001

NO.	DATE	REVISION	BY	APVD

DSGN S TROYAN | DR J THORNTON | CHK | CHECKED-BY | APVD | SEALNAME

3011 S.W. WILLISTON ROAD
GAINESVILLE, FLORIDA 32608
EB0000072 AAC001992
Delayne Lange PE 70194

NORTH SIMONTON STORMWATER
EMERGENCY OUTFALL
CITY OF KEY WEST
KEY WEST, FLORIDA

CH2MHILL®

STRUCTURAL
STANDARD DETAILS

AS NOTED
VERIFY SCALE
BAR IS ONE INCH ON ORIGINAL DRAWING.
0 1"

DATE	MARCH 2014
PROJ	476166
DWG	SD-02
SHEET	X of X

BID DOCUMENTS

REUSE OF DOCUMENTS: THIS DOCUMENT, AND THE IDEAS AND DESIGNS INCORPORATED HEREIN, AS AN INSTRUMENT OF PROFESSIONAL SERVICE IS THE PROPERTY OF CH2M HILL AND IS NOT TO BE USED, IN WHOLE OR IN PART, FOR ANY OTHER PROJECT WITHOUT THE WRITTEN AUTHORIZATION OF CH2M HILL.
©CH2M HILL 2014. ALL RIGHTS RESERVED.

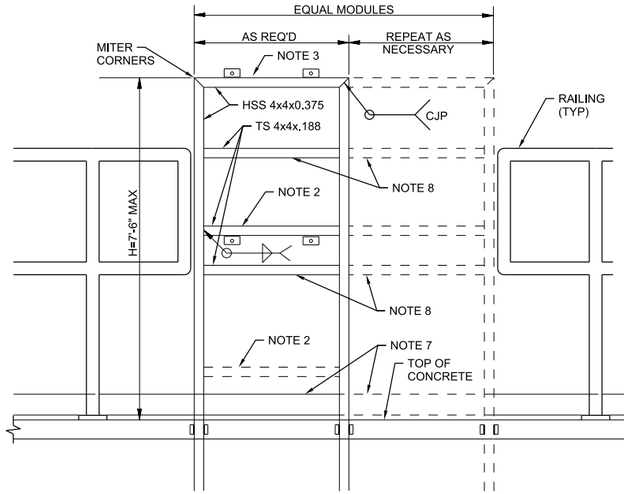

NOTES:

1. TOTAL WEIGHT OF PANEL(S) SHALL NOT EXCEED 750 LB IN EACH MODULE.
2. FOR PANELS WITH "H" GREATER THAN 4'-0", ONE HORIZONTAL MEMBER MUST BE LOCATED WITHIN THE MIDDLE THIRD OF THE FRAME HEIGHT. PROVIDE ADD'L MEMBERS AS NECESSARY FOR PANEL MOUNTING.
3. PROVIDE L 2 1/2"x 2 1/2"x 1/4"x 0'-3" WELD ALL AROUND TO TS: TYP AT EACH PANEL MOUNT.

4. GRIND ALL WELDS AND SHARP CORNERS SMOOTH.
5. FOR OUTDOOR APPLICATIONS, PROVIDE RAINHOOD/ SOLAR SHIELD AS PER DETAIL (4091-384) .
6. FRAME MEMBERS AND PLATES SHALL BE ALUMINUM.
7. TOE BOARD, 1/4" x 4" ALUMINUM PLATE WELDED TO POST AT MOUNTING RACK ONLY. EXTEND HSS 6x4 TO TOP OF TOE BOARD AS SHOWN IN SECTION.
8. HORIZONTAL MEMBER SHALL MATCH HEIGHT OF ADJACENT RAILING.
9. COAT SURFACES OF ALUMINUM IN CONTACT WITH CONCRETE. SEE SPECIFICATION 09 90 00.
10. ALL ALUMINUM SHALL BE ANODIZED.

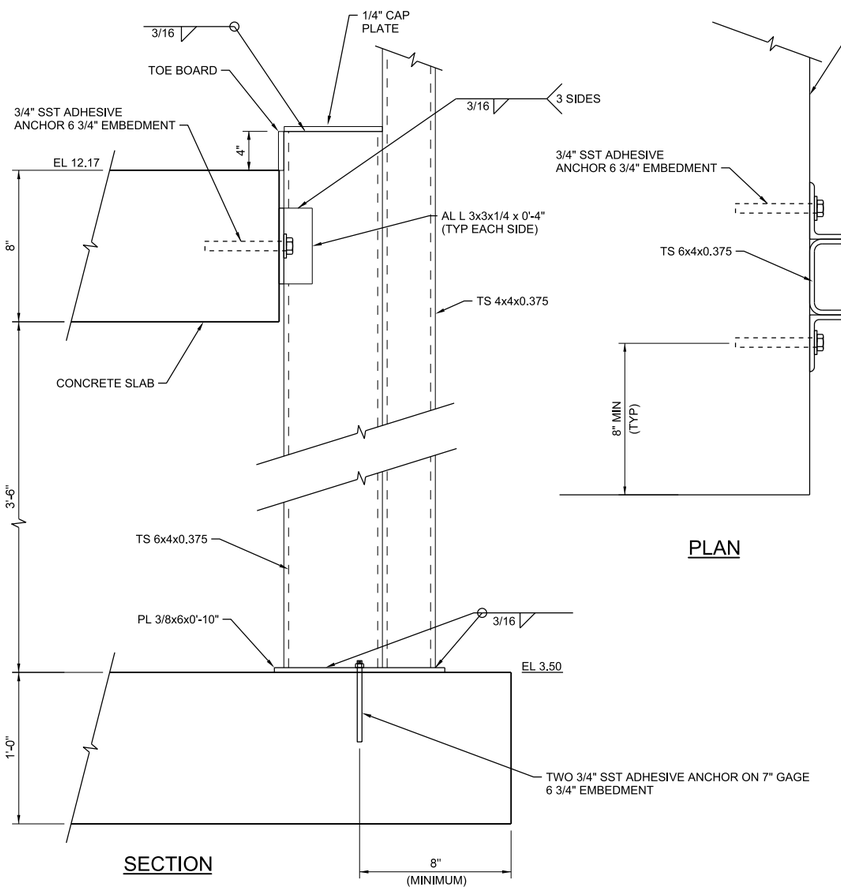

SECTION

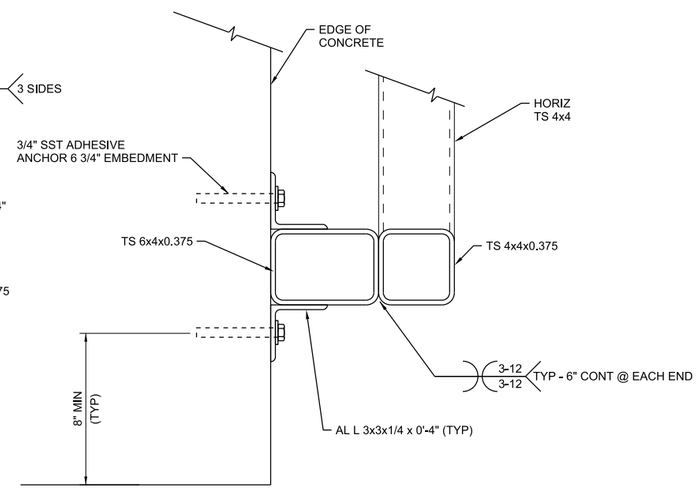

PLAN

PANEL MOUNTING RACK

NTS

4091-402

NO.	DATE	REVISION	BY	APVD

DSGN S TROYAN | DR J THORNTON | CHK | CHECKED-BY | APVD | SEALNAME

©CH2M HILL 2014, ALL RIGHTS RESERVED.

3011 S.W. WILLISTON ROAD
GAINESVILLE, FLORIDA 32608
EB0000072 AAC001992
Delayne Lange PE 70194

NORTH SIMONTON STORMWATER
EMERGENCY OUTFALL
CITY OF KEY WEST
KEY WEST, FLORIDA

CH2MHILL®

STRUCTURAL
STANDARD DETAILS

REUSE OF DOCUMENTS: THIS DOCUMENT, AND THE IDEAS AND DESIGNS INCORPORATED HEREIN, AS AN INSTRUMENT OF PROFESSIONAL SERVICE IS THE PROPERTY OF CH2M HILL AND IS NOT TO BE USED, IN WHOLE OR IN PART, FOR ANY OTHER PROJECT WITHOUT THE WRITTEN AUTHORIZATION OF CH2M HILL.

AS NOTED
VERIFY SCALE
BAR IS ONE INCH ON ORIGINAL DRAWING.
0 1"

DATE	MARCH 2014
PROJ	476166
DWG	SD-03
SHEET	X of X

BID DOCUMENTS

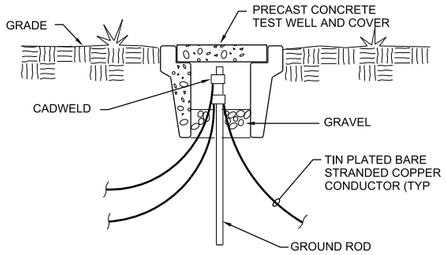

GROUND TEST WELL

NTS

2605-202

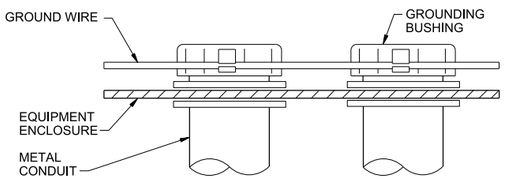

NOTE:

THE ENDS OF ALL CONDUITS REQUIRED TO BE GROUNDED BY THE SPECIFICATIONS SHALL BE GROUNDED IN ACCORDANCE WITH THIS DETAIL.

CONDUIT GROUNDING

NTS

2605-203

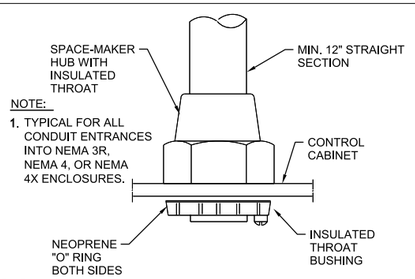

NOTE:

1. TYPICAL FOR ALL CONDUIT ENTRANCES INTO NEMA 3R, NEMA 4, OR NEMA 4X ENCLOSURES.

CONDUIT HUB

NTS

2605-203G

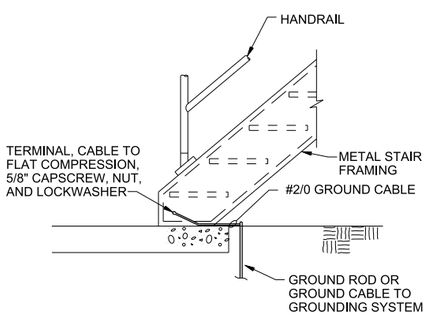

GENERAL STAIRWAY GROUNDING

NTS

2605-207

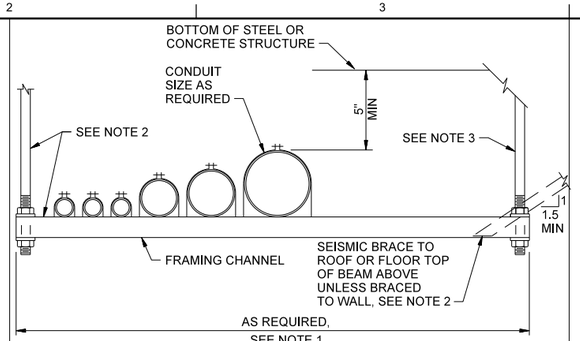

SINGLE RACK

NOTES:

1. LENGTH VARIES WITH NUMBER OF CONDUITS TO BE SUPPORTED AND SPACING BETWEEN CONDUITS.
2. DETERMINE SPAN AND TYPE OF SUPPORTS, LOCATE SUPPORTS, AND SIZE SUPPORT RODS, CONNECTIONS AND BRACES PER MANUFACTURER'S RECOMMENDATIONS AND SEISMIC REQUIREMENTS.
3. AT STEEL STRUCTURE, USE GRINNEL MALLEABLE BEAM CLAMP. AT CONCRETE STRUCTURE, USE UNIVERSAL CONCRETE INSERT, UNISTRUT CHANNEL WITH #4 x 3'-0" BELOW, OR GRINNEL FIGURE 52 ATTACHMENT PLATE, SIMILAR. TYPE AND SIZE AS REQUIRED BY TOTAL LOADS.
4. USE STAINLESS STEEL HARDWARE.
5. SPACE CONDUIT SUFFICIENTLY TO ALLOW REMOVAL OF ONE CONDUIT WITHOUT DISTURBING ADJACENT CONDUITS.

CONDUIT RACKING SYSTEM

NTS

2605-300

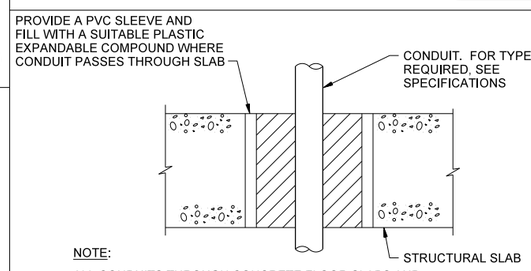

NOTE:

ALL CONDUITS THROUGH CONCRETE FLOOR SLABS AND EQUIPMENT PADS SHALL BE INSTALLED IN ACCORDANCE WITH THIS DETAIL.

SLAB PENETRATION

NTS

2605-310

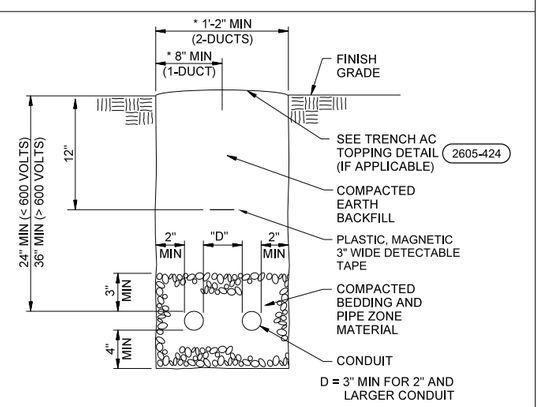

* PER SPECIFICATION SECTION 31 23 16 EXCAVATION

TRENCH AND CONDUIT PLACEMENT

NTS

2605-423B

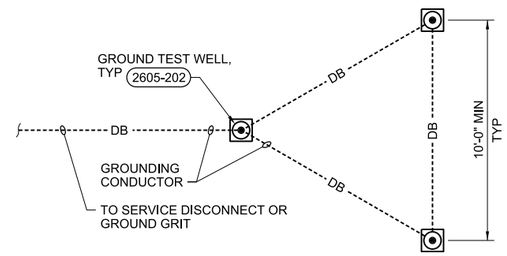

GROUND TRIANGLE

NTS

2605-201

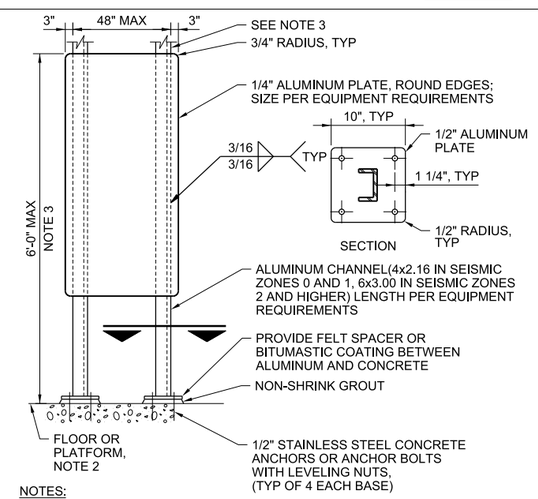

NOTES:

1. USE STAINLESS STEEL MOUNTING HARDWARE. USE WASHER AND SPLIT LOCK WASHER UNDER ALL NUTS.
2. FOR YARD LOCATIONS PROVIDE A 6 INCH THICK CONCRETE PAD AT GRADE WITH #4 BAR @ 12" OC EACH WAY, CENTERED. THE PAD SHALL BE 12 INCHES LONGER THAN THE MOUNTING PLATE BY ONE HALF THE HEIGHT OF THE MOUNTING PLATE ABOVE FINISHED GRADE. MINIMUM WIDTH 24 INCHES.
3. FOR HEIGHTS EXCEEDING 5'-0" OR WEIGHT OF MOUNTED EQUIPMENT EXCEEDING 200 LBS, SIZE POSTS AND CONNECTIONS FOR LATERAL LOADS. EXTEND POSTS TO STRUCTURE ABOVE WHERE REQUIRED BY CALCULATION, SEE GENERAL ELECTRICAL CONSTRUCTION NOTES ON DRAWINGS. PROVIDE ADDITIONAL BRACING AS REQUIRED TO MEET WINDLOAD REQUIREMENTS.

ELECTRICAL EQUIPMENT SUPPORT

NTS

2605-008b

GENERAL NOTE:

A. SEE DRAWING E-01 FOR ABBREVIATIONS.

NO.	DATE	REVISION	BY	APVD

DSGN D NICHOLSON | DR N ADAMS | CHK | CHECKED-BY | APVD | SEALNAME

CH2MHILL®
3011 S.W. WILLISTON ROAD
GAINESVILLE, FLORIDA 32608
EB0000072 · AAC001992
David C. Nicholson PE 60201

NORTH SIMONTON STORMWATER
EMERGENCY OUTFALL
CITY OF KEY WEST
KEY WEST, FLORIDA

ELECTRICAL
STANDARD DETAILS

NTS
VERIFY SCALE
BAR IS ONE INCH ON ORIGINAL DRAWING.
0 1"

DATE	MARCH 2014
PROJ	476166
DWG	SD-04
SHEET	ShtNum of ShtTot

BID DOCUMENTS

REUSE OF DOCUMENTS: THIS DOCUMENT, AND THE IDEAS AND DESIGNS INCORPORATED HEREIN, AS AN INSTRUMENT OF PROFESSIONAL SERVICE, IS THE PROPERTY OF CH2M HILL AND IS NOT TO BE USED, IN WHOLE OR IN PART, FOR ANY OTHER PROJECT WITHOUT THE WRITTEN AUTHORIZATION OF CH2M HILL.
©CH2M HILL 2014. ALL RIGHTS RESERVED.

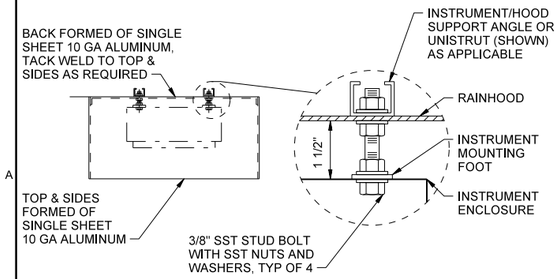

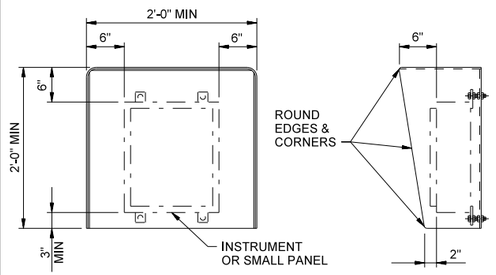

NOTES:

1. ALL EXPOSED EDGES TO BE GROUND SMOOTH AND BURR FREE.
2. MOUNT RAIN HOOD BETWEEN INSTRUMENT AND MOUNTING BRACKET. DRILL HOLES IN RAIN HOOD AS PER MOUNTING HOLES FOR INSTRUMENT.

RAIN HOOD INSTALLATION

NTS

4091-384

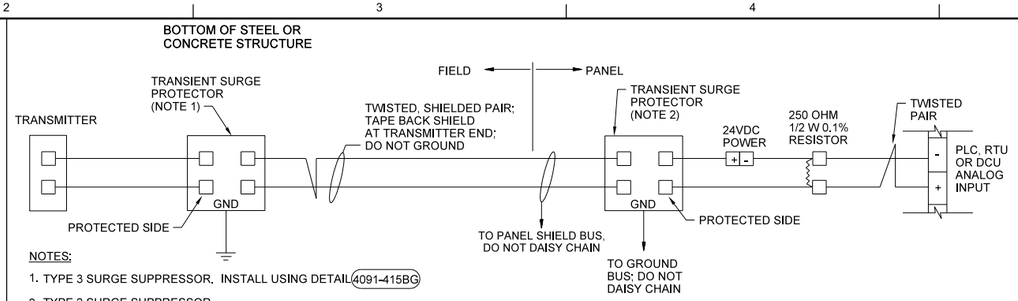

NOTES:

1. TYPE 3 SURGE SUPPRESSOR. INSTALL USING DETAIL 4091-415BG
2. TYPE 2 SURGE SUPPRESSOR.

2-WIRE TRANSMITTER

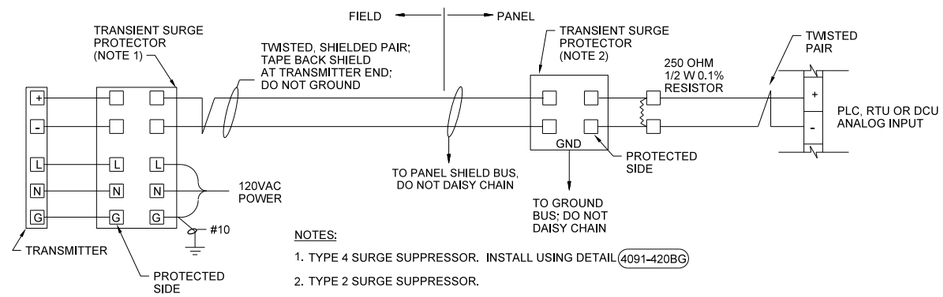

NOTES:

1. TYPE 4 SURGE SUPPRESSOR. INSTALL USING DETAIL 4091-420BG
2. TYPE 2 SURGE SUPPRESSOR.

4-WIRE TRANSMITTER

TYPICAL OUTDOOR TRANSMITTERS

NTS

4091-405BG

GENERAL NOTE:

A. SEE DRAWING E-01 FOR ABBREVIATIONS.

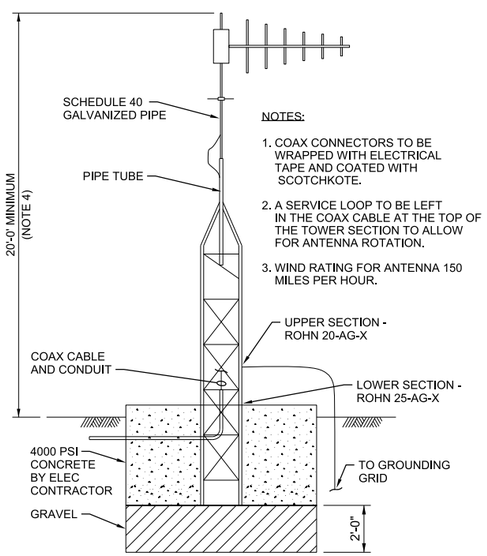

NOTES:

1. COAX CONNECTORS TO BE WRAPPED WITH ELECTRICAL TAPE AND COATED WITH SCOTCHKOTE.
2. A SERVICE LOOP TO BE LEFT IN THE COAX CABLE AT THE TOP OF THE TOWER SECTION TO ALLOW FOR ANTENNA ROTATION.
3. WIND RATING FOR ANTENNA 150 MILES PER HOUR.
4. DFS TO DETERMINE EXACT ANTENNA HEIGHT.
5. CONTRACTOR TO SIZE CONCRETE FOUNDATION BASED ON WIND RATING IN NOTE 3.

ANTENNA DETAIL

NTS

4091-412

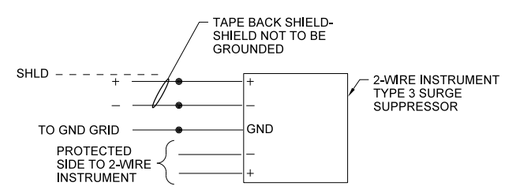

WIRING DIAGRAM

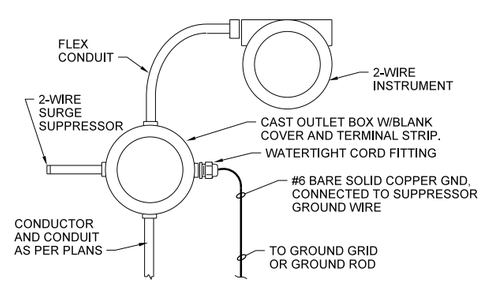

SURGE SUPPRESSOR INSTALLATION 2-WIRE INSTRUMENT

NTS

4091-415BG

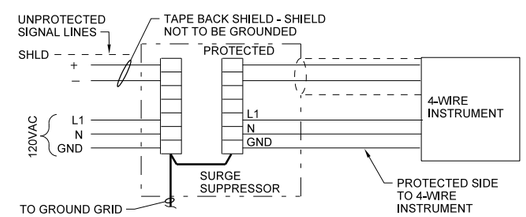

WIRING DIAGRAM

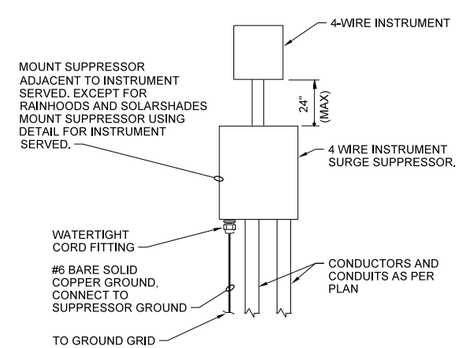

SURGE SUPPRESSOR INSTALLATION 4-WIRE INSTRUMENT

NTS

4091-420BG

NO.	DATE	REVISION	BY	APVD

DSGN D NICHOLSON | DR N ADAMS | CHK | CHECKED-BY APVD | SEALNAME

©CH2M HILL 2014, ALL RIGHTS RESERVED.

REUSE OF DOCUMENTS: THIS DOCUMENT, AND THE IDEAS AND DESIGNS INCORPORATED HEREIN, AS AN INSTRUMENT OF PROFESSIONAL SERVICE, IS THE PROPERTY OF CH2M HILL AND IS NOT TO BE USED, IN WHOLE OR IN PART, FOR ANY OTHER PROJECT WITHOUT THE WRITTEN AUTHORIZATION OF CH2M HILL.

3011 S.W. WILLISTON ROAD
GAINESVILLE, FLORIDA 32608
EB0000072 AAC001992
David C. Nicholson PE 60201

NORTH SIMONTON STORMWATER EMERGENCY OUTFALL
CITY OF KEY WEST
KEY WEST, FLORIDA

CH2MHILL®

ELECTRICAL

STANDARD DETAILS

NTS

VERIFY SCALE

BAR IS ONE INCH ON ORIGINAL DRAWING. 0 1"

DATE	MARCH 2014
PROJ	476166
DWG	SD-05
SHEET	ShtNum of ShtTot

BID DOCUMENTS