PAVING MATERIAL SCHEDULE - BASE BID

AS DIRECTED BY CITY STAFF

SYMBOL	SPECIFICATION	CONTACT
A	NOT USED	Tremron Group 11321 NW 112th Court MEDLEY, FL 33178 Phone: (305) 825-9000 Fax: (305) 823.6614 Leo Salcedo - Manufacturer's Representative Phone: (305) 481-1788
B	NOT USED	
C	NOT USED	
D	NOT USED	
E	4" x 8" x 3 1/8" CONCRETE PAVER / COLOR: SANTA FE / 45 DEGREE HERRINGBONE / TRUNCATED DOME TACTILE SURFACE AT PEDESTRIAN INTERSECTION.	
F	NOT USED	
G	NOT USED	
H	NOT USED	
I	12" x 36" X 3/4" GRANITE PAVER / RUNNING BOND/ COLOR: BLACK DIAMOND / FINISH: THERMAL / MATCH BUILDING VENEER BASE.	KEYS GRANITE 8788 NW 27TH AVENUE MIAMI FLORIDA 33172 Phone: (305) 477 7363 Fax: 305 477 9567 sales@keysgranite.com
J	CONCRETE. COLOR: NATURAL GRAY. FINISH: LIGHT BROOM AND ROCK SALT. ROCK SALT NOT TO EXCEED 1/4" DIAMETER.	REFER TO CIVIL ENGINEERING
K	ASPHALT	REFER TO CIVIL ENGINEERING
L	STAMPED ASPHALT. COLOR AND TEXTURE TO CLOSLY MATCH CONCRETE PAVER COLOR SANTE FE BY TREMRON GROUP. CONTRACTOR TO SUBMIT SAMPLES FOR APPROVAL.	REFER TO SPECIFICATIONS
M	6" WIDE WHITE PAVEMENT STRIPING	REFER TO CIVIL ENGINEERING
N	6" WIDE BLUE PAVEMENT STRIPING	REFER TO CIVIL ENGINEERING
O	4" x 8" x 3 1/8" CONCRETE PAVER / COLOR: SANTA FE / 45 DEGREE HERRINGBONE WITH CONTINUOUS 4" x 8" x 31/8" CONCRETE PAVER / COLOR: SANTA FE SINGLE SOLDIER COURSE BORDER	Tremron Group 11321 NW 112th Court MEDLEY, FL 33178 Phone: (305) 825-9000 Fax: (305) 823.6614 Leo Salcedo - Manufacturer's Representative Phone: (305) 481-1788
P	6" x 8" x 3 1/8" CONCRETE PAVER / COLOR: WHITE / SEE CIVIL ENGINEERING PLANS FOR DIMENSIONING REQUIREMENTS.	

SEE CIVIL ENGINEERING AND ARCHITECTURAL PLANS FOR INSTALLATION DETAILS. AND DIMENSIONING. 2. THE PAVER HATCHING SHOWN IN DETAIL 01/L-2.0 IS NOT TO SCALE AND IS SHOWN FOR CLARIFICATION OF DIRECTION OF PAVER LAYOUT ONLY.

PAVING MATERIAL SCHEDULE - ALTERNATE #1

AS DIRECTED BY CITY STAFF

SYMBOL	SPECIFICATION	CONTACT
A	MATCH BASE BID SCHEDULE	MATCH BASE BID SCHEDULE
B		
C		
D		
E		
F		
G		
H		
I		
J		
K		
L	STAMPED CONCRETE. COLOR AND TEXTURE TO CLOSLY MATCH CONCRETE PAVER COLOR SANTE FE BY TREMRON GROUP. CONTRACTOR TO SUBMIT SAMPLES FOR APPROVAL.	REFER TO SPECIFICATIONS
M	6" WIDE WHITE PAVEMENT STRIPING	REFER TO CIVIL ENGINEERING
N	6" WIDE BLUE PAVEMENT STRIPING	REFER TO CIVIL ENGINEERING
O	4" x 8" x 3 1/8" CONCRETE PAVER / COLOR: SANTA FE / 45 DEGREE HERRINGBONE WITH CONTINUOUS 4" x 8" x 31/8" CONCRETE PAVER / COLOR: SANTA FE SINGLE SOLDIER COURSE BORDER	Tremron Group 11321 NW 112th Court MEDLEY, FL 33178 Phone: (305) 825-9000 Fax: (305) 823.6614 Leo Salcedo - Manufacturer's Representative Phone: (305) 481-1788
P	6" x 8" x 3 1/8" CONCRETE PAVER / COLOR: WHITE / SEE CIVIL ENGINEERING PLANS FOR DIMENSIONING REQUIREMENTS.	

SEE CIVIL ENGINEERING AND ARCHITECTURAL PLANS FOR INSTALLATION DETAILS. AND DIMENSIONING. 2. THE PAVER HATCHING SHOWN IN DETAIL 01/L-2.0 IS NOT TO SCALE AND IS SHOWN FOR CLARIFICATION OF DIRECTION OF PAVER LAYOUT ONLY.

PAVING MATERIAL SCHEDULE - ALTERNATE #2

ORIGINAL APPROVED DESIGN

SYMBOL	SPECIFICATION	CONTACT
A	MATCH BASE BID SCHEDULE	MATCH BASE BID SCHEDULE
B		
C		
D		
E		
F		
G		
H		
I		
J		
K		
L	4" x 8" x 3 1/8" CONCRETE PAVER / COLOR: SANTA FE / 45 DEGREE HERRINGBONE WITH CONTINUOUS 4" x 8" x 31/8" CONCRETE PAVER / COLOR: SANTA FE SINGLE SOLDIER COURSE BORDER	Tremron Group 11321 NW 112th Court MEDLEY, FL 33178 Phone: (305) 825-9000 Fax: (305) 823.6614 Leo Salcedo - Manufaturers Representative Phone: (305) 481-1788
M	6" x 8" x 3 1/8" CONCRETE PAVER / COLOR: WHITE / SEE CIVIL ENGINEERING PLANS FOR DIMENSIONING REQUIREMENTS.	
N	6" x 8" x 3 1/8" CONCRETE PAVER / COLOR: BLUE / SEE CIVIL ENGINEERING PLANS FOR DIMENSIONING REQUIREMENTS.	
O	4" x 8" x 3 1/8" CONCRETE PAVER / COLOR: SANTA FE / 45 DEGREE HERRINGBONE WITH CONTINUOUS 4" x 8" x 31/8" CONCRETE PAVER / COLOR: SANTA FE SINGLE SOLDIER COURSE BORDER	
P	6" x 8" x 3 1/8" CONCRETE PAVER / COLOR: WHITE / SEE CIVIL ENGINEERING PLANS FOR DIMENSIONING REQUIREMENTS.	

SEE CIVIL ENGINEERING AND ARCHITECTURAL PLANS FOR INSTALLATION DETAILS. AND DIMENSIONING. 2. THE PAVER HATCHING SHOWN IN DETAIL 01/L-2.0 IS NOT TO SCALE AND IS SHOWN FOR CLARIFICATION OF DIRECTION OF PAVER LAYOUT ONLY.

Revision
8-01-13

LEGEND:

- CONCRETE BOLLARD
- POLE LIGHT
- PARKING PAY STATION
- PARKING SIGNAGE

NOTE:

SEE ARCHITECTURAL AND ELECTRICAL ENGINEERING PLANS FOR DETAILS.

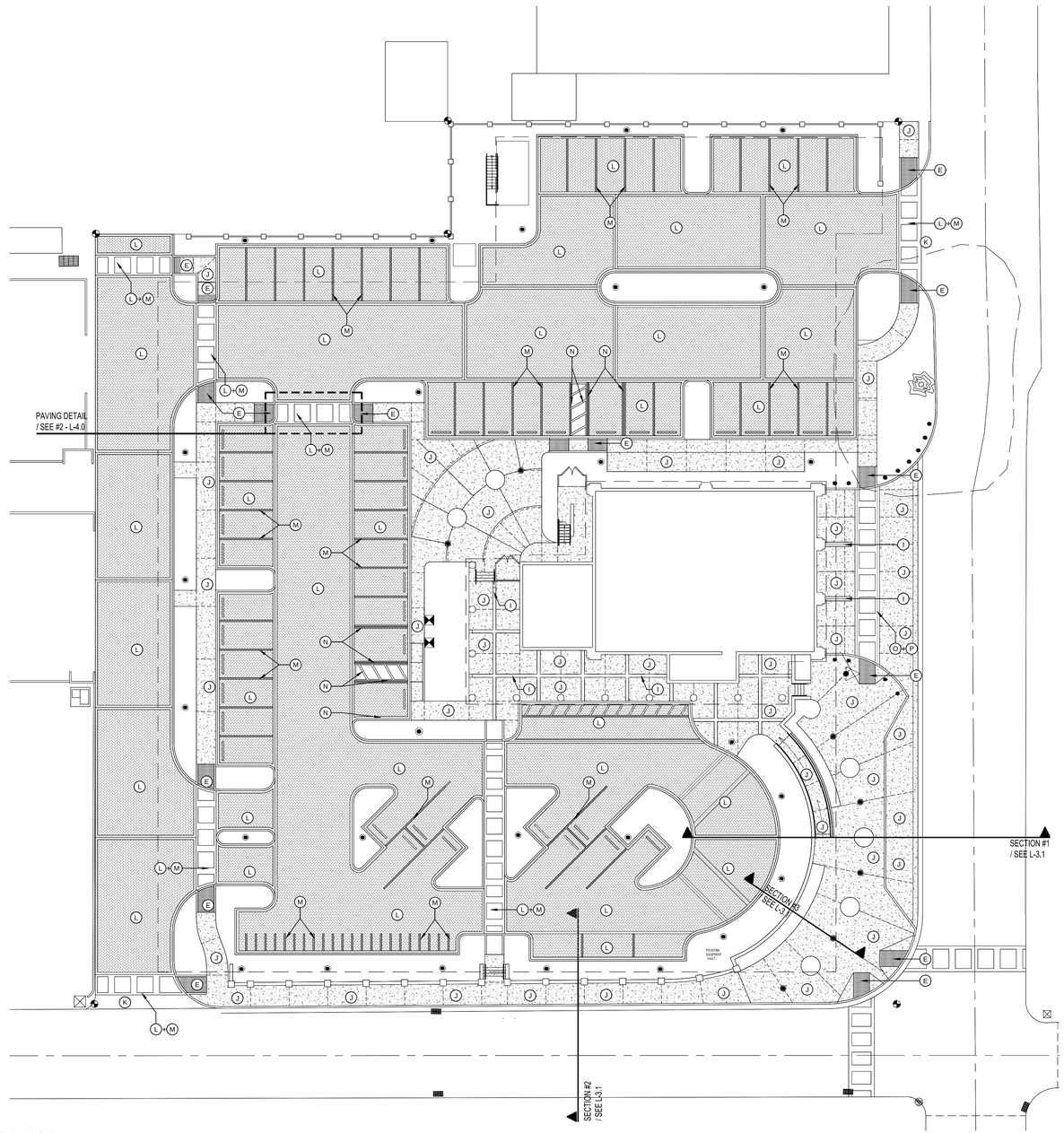

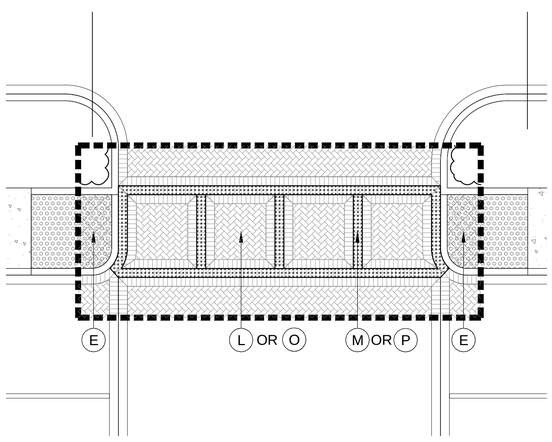

N 02 L-4.0 CROSSWALKS TYP. DETAIL

SCALE: 3/16" = 1'-0"

01 L-4.0 SITE PLAN

SCALE: 1" = 20'-0"

0 20 40 60
GRAPHIC SCALE: 1" = 20'-0"

BAR IS TWO INCHES ON ORIGINAL DRAWINGS IF NOT TWO INCHES ON THIS SHEET ADJUST SCALES ACCORDINGLY.

NOTE: ALL JOINT LOCATIONS TO BE APPROVED BY ARCHITECT PRIOR TO CONSTRUCTION.

ARCHITECT:

mbi | k2m
ARCHITECTURE, INC.

Architecture, Interior Design, Procurement, Owner Representation, Specialty Consulting

1001 Whitehead Street
Key West, Florida 33040
Tel: 305.292.7722
Fax: 305.292.2162
Email: infoKW@mbi-k2m.com
www.mbi-k2m.com
PROF. REG. AA26001059

Building Relationships
Based on Trust and Results

Cleveland | Key West | Charlotte
Southwest Florida | Washington DC

Seal:

Consultants:

STRUCTURAL ENGINEER:
TKW Consulting Engineers
5621 Banner Drive,
Fort Myers, Florida 33912

CIVIL ENGINEER:
Perez Engineering & Development, Inc.
1010 Kennedy Dr., Suite 201
Key West, Florida 33040

MEP / FP ENGINEER:
TLC Engineering for Architecture
1400 Colonial Boulevard, Suite 203
Fort Myers, Florida 33907

LANDSCAPE ARCHITECT
Landscape Architecture, LLC
2525 Ponce de Leon Blvd., Suite 300
Coral Gables, Florida 33134

Submissions:

2013.02.15 - Bidding Documents

FIRE STATION #2
616 Simonton Street, Key West, Florida
BUILDING AND SITE DEVELOPMENT
FOR
City of Key West, 3132 Flagler Avenue, Key West, Florida 33040

PLOTTED: 7/31/2013 9:53 PM

Drawing Size	Project #:
24x36	MK-12060
Drawn By: EN-JV	Checked By: EN

Title:

PAVING PLAN

Sheet Number:

L-4.0

Date: February 15, 2013

© 2013 by mbi | k2m Architecture, Inc.

SITE FURNITURE SCHEDULE

SYMBOL	QUANTITY	TYPE	SPECIFICATION	CONTACT
A	1	FLAG POLE	CONE TAPERED ALUMINUM FLAGPOLE / 6" OD BUTT / 3 1/2" OD TOP / .188 WALL THICKNESS / 33'-0" OVERALL HEIGHT WITH 30' -0" EXPOSED / 215-R1 CLEAR ANODIZED FINISH / INTERNAL HALYARD / 6" DIA CLEAR ANODIZED ALUMINUM BALL /SEE ARCHTECURAL & STRUCTURAL PLANS FOR	THE BAARTOL COMPANY 901 W. FRANKLIN ST. P.O.BOX 670 / KENTON, OHIO TEL. 800.537.4143 FAX. 419.673.1409
B	24	TRIO BICYCLE RACK	CAST ALUMINUM / SKTRO / AL / PC / SFM / POWDER COAT FINISH: ALUMINUM TEXTURE / SURFACE MOUNT TO SUBSTRATE	FORMS+SURFACES TEL. 1.800.451.0410 FAX. 412.781.7840 www.forms-surfaces.com
C	2	LITTER RECEPTACLE	36 GALLON SIDE OPENING SOLID CAST ALUMINUM SLDIS-136 / SINGLE STREAM / POWDER COAT FINISH: ALUMINUM TEXTURE BODY & SLATE TEXTURE LID / LITTER LID WITH LITTER GRAPHICS / SINGLE STREAM 36 GALLON LINER WITH DRAIN HOLE AND BAG SLOTS / SURFACE MOUN	
D	2	RECYCLING RECEPTACLE	36 GALLON SIDE OPENING SOLID CAST ALUMINUM SLDIS-216 / DOUBLE STREAM / POWDER COAT FINISH: ALUMINUM TEXTURE BODY & SLATE TEXTURE LID / LID WITH BOTTLES & CANS GRAPHIC AND PAPER GRAPHIC / DOUBLE STREAM 36 GALLON LINER WITH DRAIN HOLES / SURFACE	
E	11	BENCH	ROUND CONCRETE CAMPUS BENCH / B5736 36" DIA X 18" TALL / DIAMOND GRIND SEAT SURFACES/SB FINISHES (SANDBLAST) COLOR & FINISH: DCS 25 75/25 2% / SEALER: TWO COATS ACR3 SEMI-GLOSS	DOTY & SONS CONCRETE INC. 1275 EAST STATE STREET SYCAMORE, IL 60178 TEL. 1800.233.3907 / 815.895.2884
F	18	BOLLARD	ROUND CONCRETE DOME TOP BOLLARD WITH ACCENT BAR / B1230D / CAST OUT 4" FOR PIPE / COLOR & FINISH DCS 25 75/25 2% / SEALER: TWO COATS ACR3 SEMI-GLOSS	

LEGEND:

- CONCRETE BOLLARD
- POLE LIGHT
- DOUBLE POLE LIGHT
- PARKING PAY STATION
- PARKING SIGNAGE

NOTE:

SEE ARCHITECTURAL AND ELECTRICAL ENGINEERING PLANS FOR DETAILS.

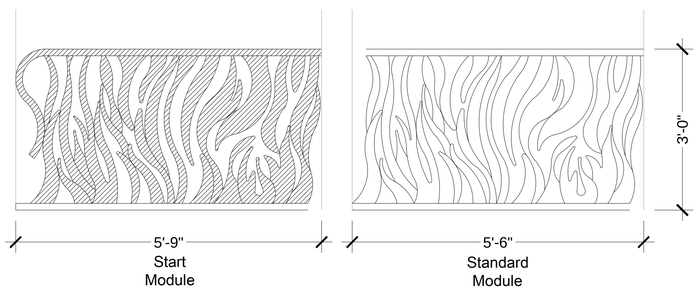

01 / L-2.0 FLAME HANDRAIL CONCEPT

SCALE: 3/4" = 1'-0"

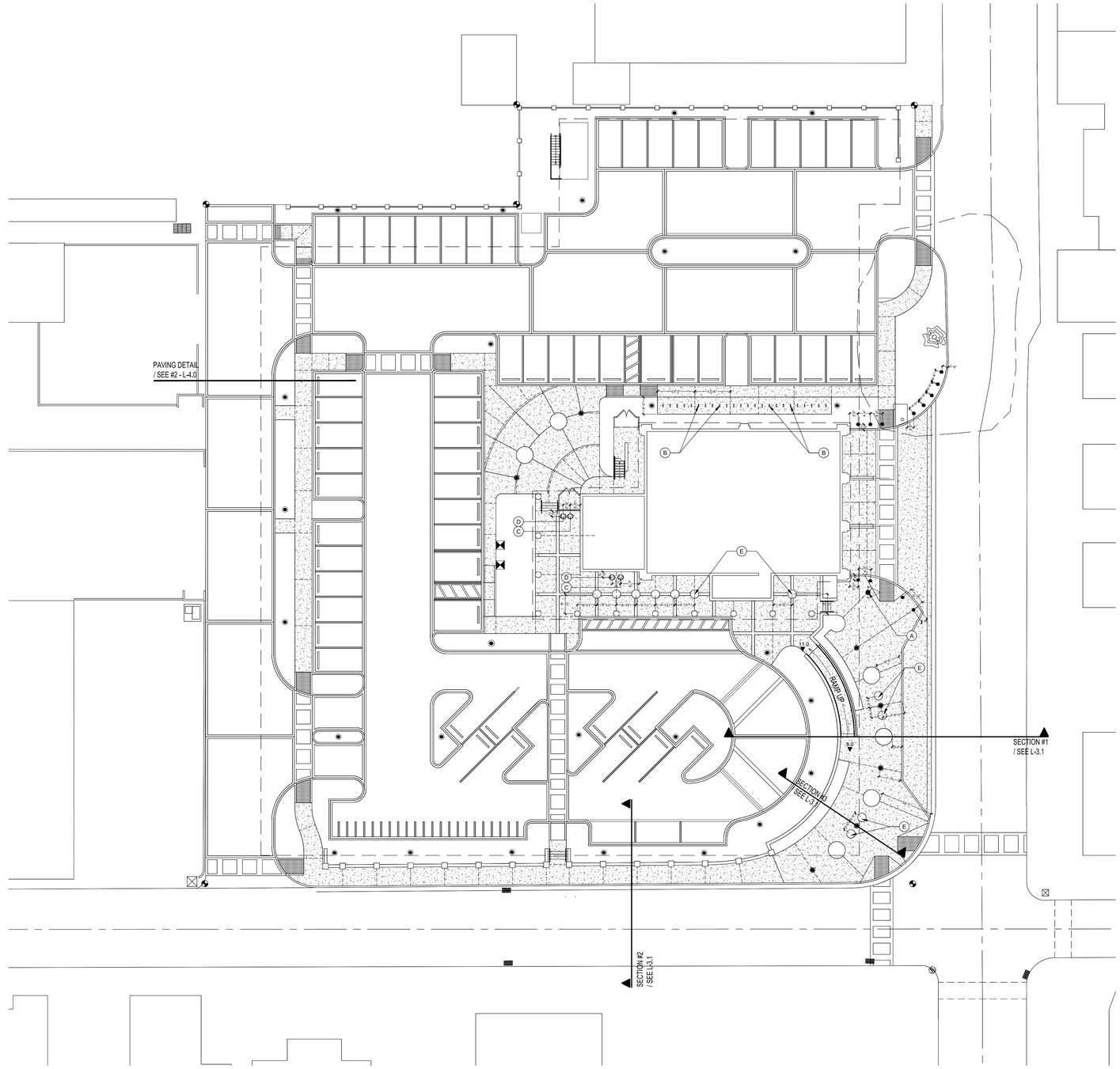

N 02 / L-2.0 SITE PLAN

SCALE: 1" = 20'-0"

0 20 40 60
GRAPHIC SCALE: 1" = 20'-0"

BAR IS TWO INCHES ON ORIGINAL DRAWINGS
IF NOT TWO INCHES ON THIS SHEET ADJUST
SCALES ACCORDINGLY.

ARCHITECT:

mbi | k2m
ARCHITECTURE, INC.

Architecture, Interior Design,
Procurement,
Owner Representation,
Specialty Consulting

1001 Whitehead Street
Key West, Florida 33040
Tel: 305.292.7722
Fax: 305.292.2162
Email: infoKW@mbi-k2m.com
www.mbi-k2m.com
PROF. REG. AA26001059
Building Relationships
Based on Trust and Results
Cleveland | Key West | Charlotte
Southwest Florida | Washington DC

Seal:

Consultants:

STRUCTURAL ENGINEER:
TKW Consulting Engineers
5621 Banner Drive,
Fort Myers, Florida 33912

CIVIL ENGINEER:
Perez Engineering & Development, Inc.
1010 Kennedy Dr., Suite 201
Key West, Florida 33040

MEP / FP ENGINEER:
TLC Engineering for Architecture
1400 Colonial Boulevard, Suite 203
Fort Myers, Florida 33907

LANDSCAPE ARCHITECT
Landscape Architecture, LLC
2525 Ponce de Leon Blvd., Suite 300
Coral Gables, Florida 33134

Submissions:

2013.02.15 - Bidding Documents

FIRE STATION #2
BUILDING AND SITE DEVELOPMENT
FOR
616 Simonton Street, Key West, Florida
City of Key West, 3132 Flagler Avenue, Key West, Florida 33040

PLOTTED: 8/4/2013 6:37 AM

Drawing Size	Project #:
24x36	MK-12060
Drawn By: EN-JV	Checked By: EN

Title: SITE FURNITURE PLAN

Sheet Number: L-5.0

Date: February 15, 2013

©2013 by mbi | k2m Architecture, Inc.

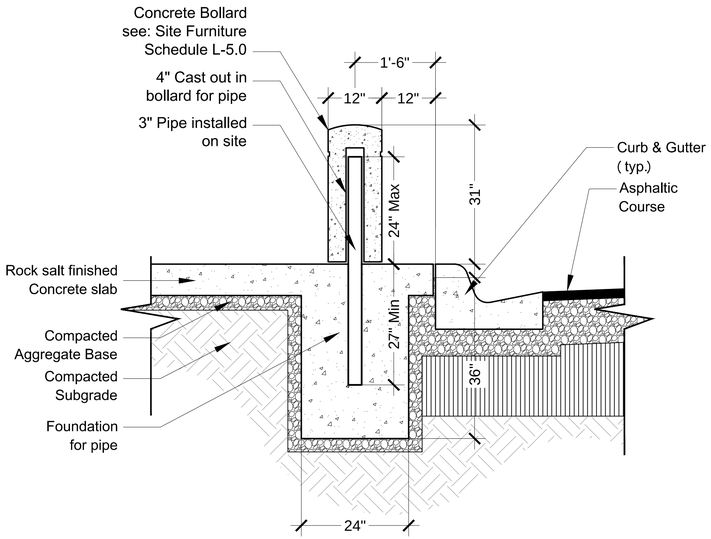

01 L-5.1

BOLLARD TYPICAL PLAZA DETAIL

SCALE: 3/4" = 1'-0"

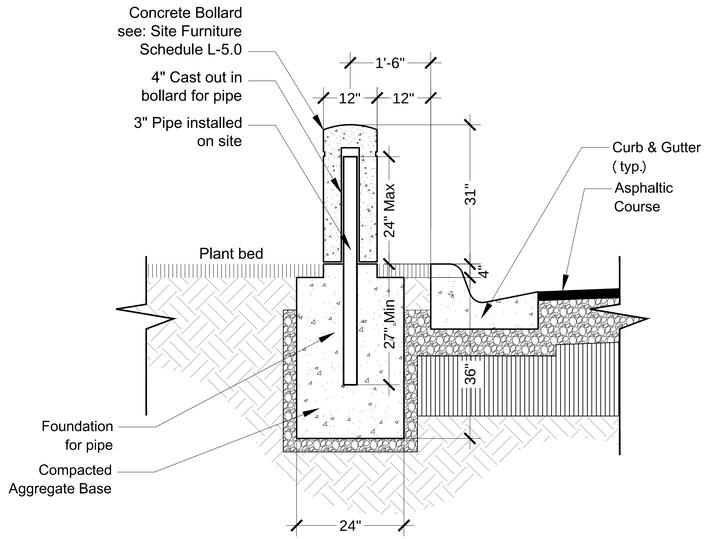

02 L-5.1

BOLLARD TYPICAL PLANT BED DETAIL

SCALE: 3/4" = 1'-0"

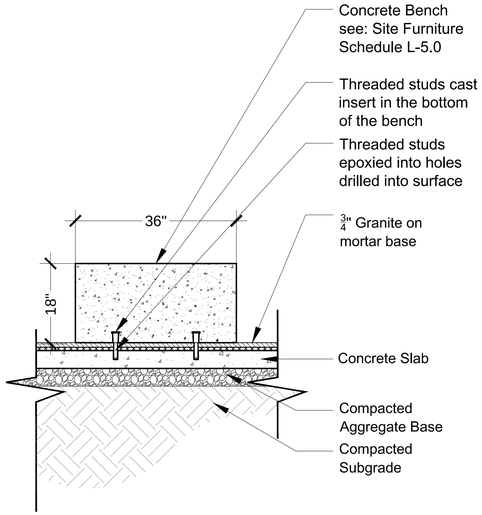

03 L-5.1

BENCH TYPICAL DETAIL

SCALE: 3/4" = 1'-0"

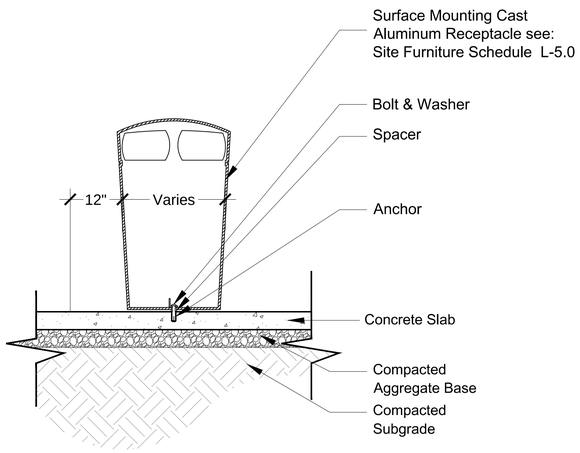

04 L-5.1

TRASH RECEPTACLE TYPICAL DETAIL

SCALE: 3/4" = 1'-0"

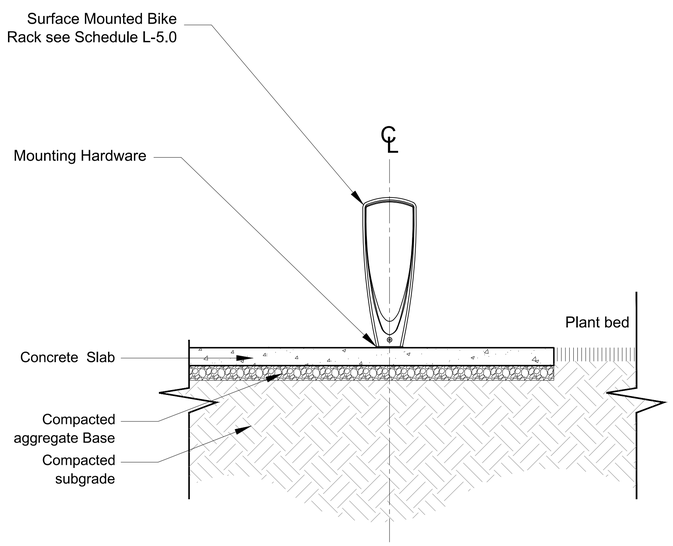

05 L-5.1

BIKE RACK TYPICAL DETAIL

SCALE: 3/4" = 1'-0"

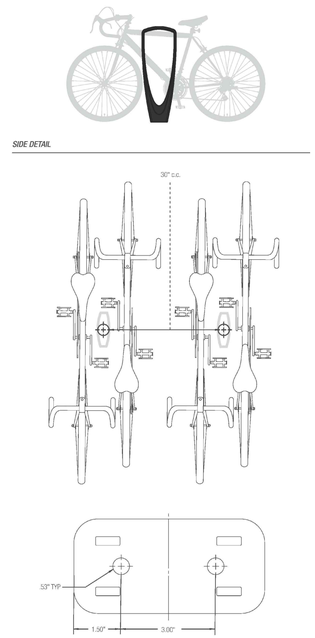

NOTE:
FOR DESIGN INTENT ONLY, SEE ARCHITECTURAL, STRUCTURAL ENGINEERING AND CIVIL ENGINEERING DRAWINGS FOR PAVING CONSTRUCTION DETAILS.

ARCHITECT:

mbi | k2m
ARCHITECTURE, INC.

Architecture, Interior Design,
Procurement,
Owner Representation,
Specialty Consulting

1001 Whitehead Street
Key West, Florida 33040
Tel: 305.292.7722
Fax: 305.292.2162
Email: infoKW@mbi-k2m.com
www.mbi-k2m.com
PROF. REG. AA26001059
Building Relationships
Based on Trust and Results
Cleveland | Key West | Charlotte
Southwest Florida | Washington DC

Seal:

Consultants:

STRUCTURAL ENGINEER:
TKW Consulting Engineers
5621 Banner Drive,
Fort Myers, Florida 33912

CIVIL ENGINEER:
Perez Engineering & Development, Inc.
1010 Kennedy Dr., Suite 201
Key West, Florida 33040

MEP / FP ENGINEER:
TLC Engineering for Architecture
1400 Colonial Boulevard, Suite 203
Fort Myers, Florida 33907

LANDSCAPE ARCHITECT
Landscape Architecture, LLC
2525 Ponce de Leon Blvd., Suite 300
Coral Gables, Florida 33134

Submissions:

2013.02.15 - Bidding Documents

FIRE STATION #2
616 Simonton Street, Key West, Florida
BUILDING AND SITE DEVELOPMENT
FOR
City of Key West, 3132 Flagler Avenue, Key West, Florida 33040

PLOTTED: 8/4/2013 6:39 AM

Drawing Size	Project #:
24x36	MK-12060
Drawn By: EN-JV	Checked By: EN

Title:
SITE
FURNITURE
DETAILS

Sheet Number:
L-5.1

Date: February 15, 2013

©2013 by mbi | k2m Architecture, Inc.

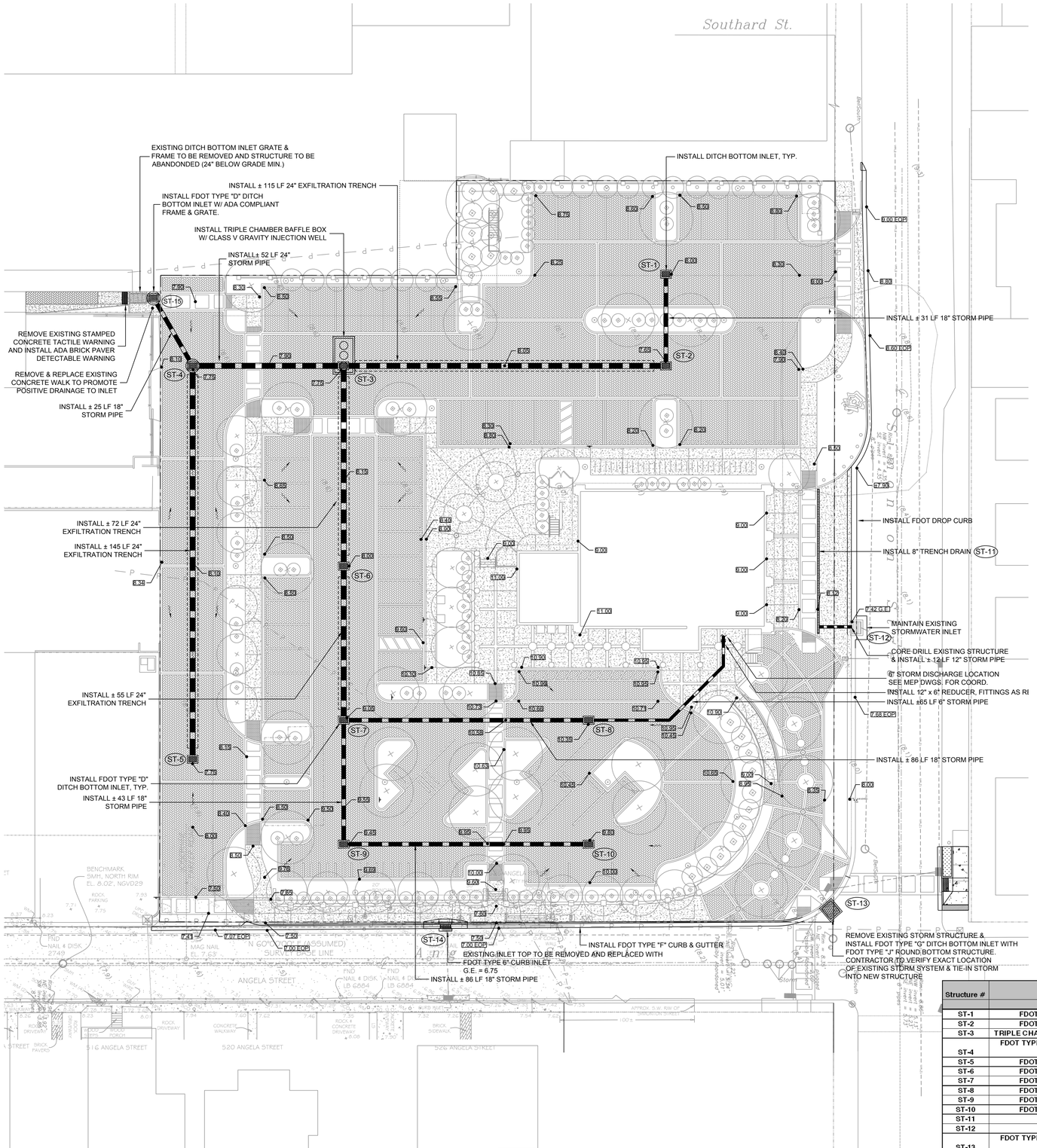

20' 0 20'

SCALE 1"=20'
BAR IS TWO INCHES ON ORIGINAL DRAWINGS IF NOT TWO INCHES ON THIS SHEET ADJUST SCALES ACCORDINGLY

LEGEND

- PROJECT LIMITS
- APSHALT (STAMPED PATTERN)
- CONCRETE PAVEMENT
- ADA DETECTABLE WARNING SURFACE
- (8.1) EXISTING GRADE
- 8.00 PROPOSED GRADE
- STORMWATER CONVEYANCE PIPE
- EXFILTRATION TRENCH
- STORMWATER INLET (FDOT DITCH BOTTOM)
- TRIPLE CHAMBER BAFFLE BOX
- STORMWATER FLOW
- STORMWATER MANHOLE
- EXISTING WATER MAIN
- EXISTING SANITARY SEWER LINE
- EXISTING STORM SEWER
- EXISTING BURIED CABLE / TEL.

NOTE:SYMBOLS IN LEGEND ARE NOT TO SCALE

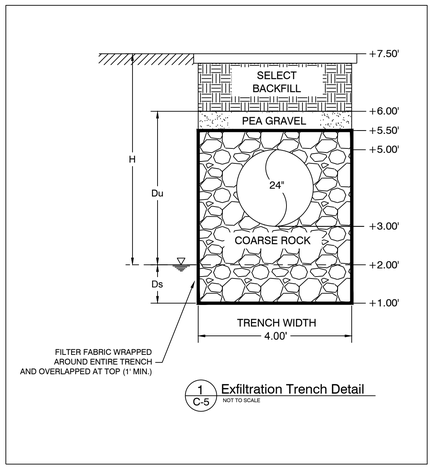

1 / C-5 Exfiltration Trench Detail
NOT TO SCALE

Water Quantity and Water Quality Calculations

Water Quantity - Predevelopment

Basin	A =	1.491	ac	64,933	sf
Pervious Area		0.092	ac	4,017	sf
Impervious Area		1.398	ac	60,916	sf
% Impervious		93.81%			
Rainfall for 25yr/24hr event	P_{24} =	9	in		
Rainfall for 25yr/3day event	P_{72} =	12.23	in		
Depth to Water Table		6	ft		
Predeveloped Available Storage		8.18	in		
Soil Storage	S =	0.51	in		
$Q_{pre} = \frac{(P_{24} - 0.2S)^2}{(P_{24} + 0.8S)}$	Q_{pre} =	11.64	in		
Runoff Volume from 25 year/ 3 day storm	$V_{25yr/24h}$ =	17.36	ac-in		

Water Quantity - Postdevelopment

Basin	A =	1.491	ac	64,933	sf
Pervious Area		0.219	ac	9,547	sf
Impervious Area		1.271	ac	55,386	sf
% Impervious		85.3%			
Rainfall for 25yr/24hr event	P_{24} =	9	in		
Rainfall for 25yr/3day event	P_{72} =	12.23	in		
Depth to Water Table		7	ft		
Developed Available Storage		8.18	in		
Soil Storage	S =	1.20	in		
$Q_{post} = \frac{(P_{24} - 0.2S)^2}{(P_{24} + 0.8S)}$	Q_{post} =	10.90	in		
Runoff Volume from 25 year/ 3 day storm	$V_{25yr/24h}$ =	16.24	ac-in		

Postdevelopment - Predevelopment

$Q_{pre-post} = Q_{post} - Q_{pre}$	$Q_{pre-post}$ =	-0.75	in
Pre/Post Volume = $Q_{pre-post}$ x A	$V_{pre-post}$ =	-1.11	ac-in

Water Quality

Project Area	1.491	ac	64,933	sf
Surface Water	0.000	ac	0	sf
Roof Area	0.160	ac	6,982	sf
Pavement/Walkways	1.111	ac	48,404	sf
Pervious area	0.219	ac	9,547	sf
Site area for Water Quality (Total area- (water surface + roof area))	1.330	ac	57,951	sf
Impervious area for water Quality (Site area for Water Quality - Pervious area)	1.111	ac	48,404	sf
% Impervious	84%			
A) One inch of runoff from project area	1.491	ac-in		
B) 2.5 inches times percent impervious (2.5 x percent impervious x (site area - surface water))	3.113	ac-in		

Comparision of Water Quality Methods

	1.491 ac-in		<	3.113 ac-in	
Pretreatment Volume Required	3.113	ac-in		11,299	cf
Exfiltration Trench Pretreatment Volume Provided	3.125	ac-in		11,344	cf

Exfiltration Trench Design

Required trench length (L) =

$$V = K(H_2W + 2H_2Du - Du^2 + 2H_2Ds) + 1.39 \times 10^{-4}(W)(Du)$$

Hydraulic Conductivity, K=	0.0001	
H =	5.5	ft
W =	4	ft
Du =	4	ft
Ds =	1	ft
Volume of Trench , V =	3.113	ac-in
Trench Length Required =	374	FT
Trench Length Provided =	387	FT

Structure #	Structure Type	Top Elev (FT.)	Invert Elevation / Size			
			North	South	East	West
ST-1	FDOT TYPE "C" INLET DITCH BOTTOM INLET	8.00	-	4.00 (18")	-	-
ST-2	FDOT TYPE "D" INLET DITCH BOTTOM INLET	7.65	3.85 (18")	-	-	3.00 (24")
ST-3	TRIPLE CHAMBER BAFFLE BOX W/ TYPE "C" GRATE INLET	7.75	-	3.00 (24")	3.00 (24")	3.00 (24")
ST-4	FDOT TYPE "D" INLET DITCH BOTTOM INLET W/ STRUC BOTT. TYPE "J"	7.75	3.70 (18") (NW)	3.00 (24")	3.00 (24")	-
ST-5	FDOT TYPE "D" INLET DITCH BOTTOM INLET	7.75	3.00 (24")	-	-	-
ST-6	FDOT TYPE "D" INLET DITCH BOTTOM INLET	8.00	3.00 (24")	3.00 (24")	-	-
ST-7	FDOT TYPE "D" INLET DITCH BOTTOM INLET	9.05	3.00 (24")	3.75 (18")	3.75 (18")	-
ST-8	FDOT TYPE "D" INLET DITCH BOTTOM INLET	10.35	-	-	7.50 (12")	4.10 (18")
ST-9	FDOT TYPE "D" INLET DITCH BOTTOM INLET	9.45	3.95 (18")	-	4.05 (18")	-
ST-10	FDOT TYPE "D" INLET DITCH BOTTOM INLET	9.80	-	-	-	4.40 (18")
ST-11	TRENCH DRAIN	8.12	-	-	4.00 (18")	-
ST-12	EXISTING DITCH BOTTOM INLET	7.42	*	*	-	3.90 (18")
ST-13	FDOT TYPE "D" INLET DITCH BOTTOM INLET W/ STRUC BOTT. TYPE "J"	7.90	(-)1.55 (*)	(-) 1.69 (*)	-	-
ST-14	FDOT TYPE "6" CURB INLET (TOP ONLY)	6.75	-	-	-	-
ST-15	FDOT TYPE "D" INLET DITCH BOTTOM INLET W/ STRUC BOTT. TYPE "J"	+ / - 7.80	-	-	3.80 (18") (SE)	-

* SIZE TO BE VERIFIED BY CONTRACTOR PRIOR TO ORDERING OF STRUCTURES

ARCHITECT:

mbi | k2m
ARCHITECTURE, INC.

Architecture, Interior Design, Procurement, Owner Representation, Specialty Consulting

1001 Whitehead Street
Key West, Florida 33040
Tel: 305.292.7722
Fax: 305.292.2162
Email: infoKW@mbi-k2m.com
www.mbi-k2m.com
PROF. REG. AA26001059

Building Relationships Based on Trust and Results

Cleveland | Key West | Charlotte
Southwest Florida | Washington DC

Seal:

Consultants:

STRUCTURAL ENGINEER:
TKW Consulting Engineers
5621 Banner Drive,
Fort Myers, Florida 33912

CIVIL ENGINEER:
Perez Engineering & Development, Inc.
1010 Kennedy Dr., Suite 201
Key West, Florida 33040

MEP / FP ENGINEER:
TLC Engineering for Architecture
1400 Colonial Boulevard, Suite 203
Fort Myers, Florida 33907

LANDSCAPE ARCHITECT
Landscape Architecture, LLC
2525 Ponce de Leon Blvd., Suite 300
Coral Gables, Florida 33134

Submissions:

2013.02.15 - Bidding Documents

FIRE STATION #2

616 Simonton Street, Key West, Florida

BUILDING AND SITE DEVELOPMENT

FOR

City of Key West, 3132 Flagler Avenue, Key West, Florida 33040

Drawing Size	Project #: MK-12060
Drawn By:	Checked By:

Title:

DRAINAGE & GRADING PLAN

Sheet Number:

C-5

Date: February 15, 2013

©2013 by mbi | k2m Architecture, Inc.