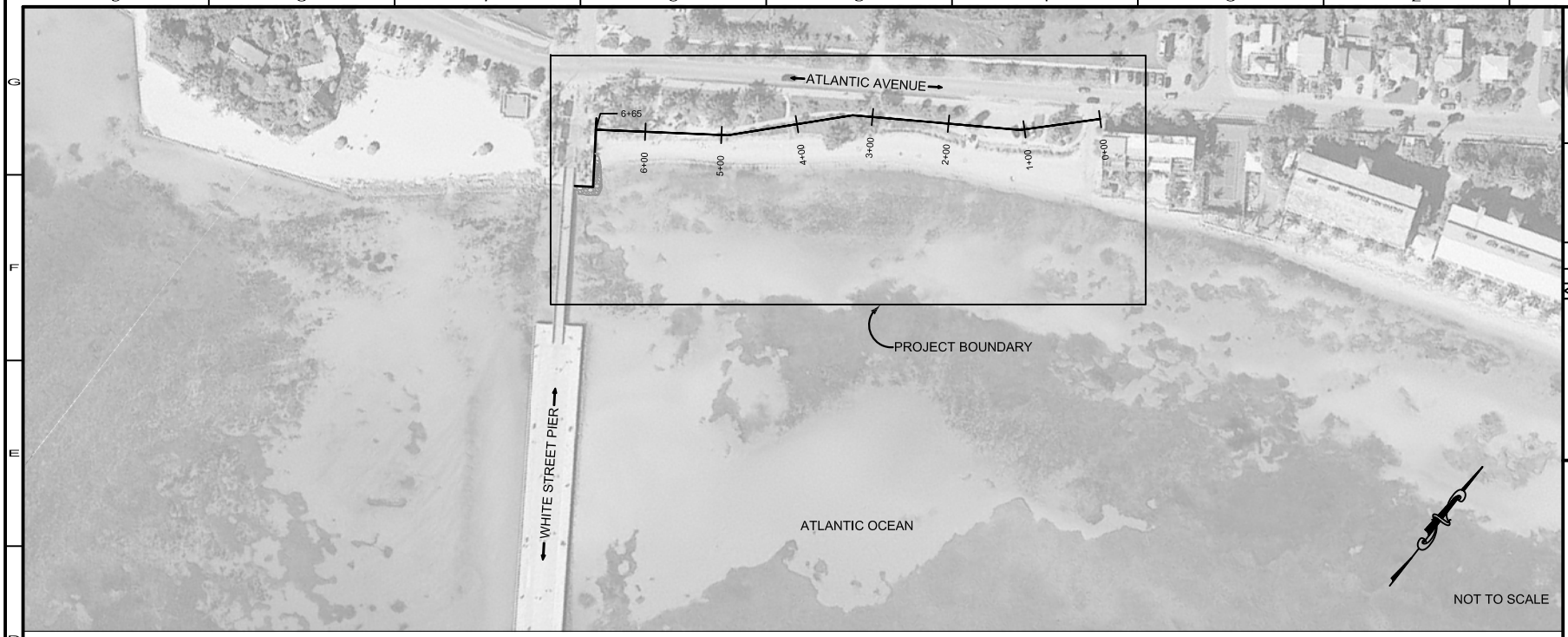

GENERAL NOTES:

1. ALL ELEVATIONS ARE IN FEET/ METERS AND REFER TO THE NORTH AMERICAN VERTICAL DATUM OF 1988.
2. COORDINATES ARE REFERENCED TO THE FLORIDA STATE PLANE COORDINATE SYSTEM, EAST ZONE (SPCS 0901), NORTH AMERICAN DATUM OF 1983, 1990 ADJUSTMENT (NAD 83/90).
3. HORIZONTAL AND VERTICAL CONTROL WILL BE BASED UPON THE ATTACHED CONTROL TABLE FOUND ON THE COVER.
4. TOPOGRAPHIC AND BATHYMETRIC DATA PROVIDED BY ATKINS DATED AUGUST 9, 2012.
5. SURVEY INFORMATION DEPICTED REPRESENTS THE EXISTING CONDITIONS AT THE TIME OF THE SURVEY.
6. AERIAL PHOTOGRAPHS WERE PROVIDED BY FLORIDA DEPARTMENT OF TRANSPORTATION AND WERE COLLECTED IN 2009.
7. IF ARCHEOLOGICAL OR HISTORIC RESOURCES ARE ENCOUNTERED THE CONTRACTOR SHALL NOTIFY THE CITY/ENGINEER AND STATE HISTORIC PRESERVATION OFFICER IMMEDIATELY AND STOP WORK UNTIL DIRECTED TO RESTART.
8. THE CONTRACTOR SHALL STRICTLY ADHERE TO ALL MANATEE REGULATIONS FOR IN-WATER WORK.
9. TURBIDITY CONTROL MEASURES WILL BE PROPERLY MAINTAINED IN COMPLIANCE WITH FEDERAL AND STATE WATER QUALITY STANDARDS. IF TURBIDITY LEVELS EXCEED WATER QUALITY STANDARDS, BEACH FILL PLACEMENT ACTIVITY WILL CEASE UNTIL LEVELS RETURN TO THE ACCEPTABLE RANGE. WATER QUALITY WILL BE MONITORED BY THE CONTRACTOR. SHOULD TURBIDITY BE MEASURED MORE THAN ALLOWABLE BACKGROUND LEVELS OUTSIDE OF THE PERMITTED MIXING ZONE, WORK WILL CEASE UNTIL TURBIDITY HAS FALLEN TO AN ACCEPTABLE BACKGROUND LEVEL.

BEST MANAGEMENT PRACTICES FOR EROSION AND TURBIDITY CONTROL, INCLUDING BUT NOT LIMITED TO THE USE OF STAKED HAY BALES, TURBIDITY BARRIERS, AND SILT SCREENS, SHALL BE USED AND MAINTAINED AS NECESSARY AT ALL TIMES DURING THE PROJECT. TURBIDITY CONTROL MEASURES SHALL BE MAINTAINED AND SHALL REMAIN IN PLACE FOR THE DURATION OF CONSTRUCTION TO ENSURE THAT TURBIDITY LEVELS OUTSIDE THE CONSTRUCTION AREA DO NOT EXCEED BACKGROUND LEVELS. THE CONTRACTOR SHALL BE RESPONSIBLE FOR ENSURING THAT TURBIDITY CONTROL MEASURES ARE INSPECTED DAILY AND MAINTAINED IN GOOD WORKING ORDER SO THAT THERE ARE NO VIOLATIONS OF STATE WATER QUALITY STANDARDS OUTSIDE OF THE TURBIDITY SCREENS OR ESTABLISHED MIXING ZONES. A DAILY TURBIDITY LOG SHALL BE MAINTAINED BY THE CONTRACTOR WITH ENTRIES PRIOR TO THE START OF EACH DAY'S WORK.

10. SEDIMENT TRAPPING MEASURES: SEDIMENT BASINS AND TRAPS, PERIMETER BERMS, FILTER FENCES, BERMS, SEDIMENT BARRIERS, VEGETATIVE BUFFERS AND OTHER MEASURES INTENDED TO TRAP SEDIMENT AND/OR PREVENT THE TRANSPORT OF SEDIMENT INTO WATERS OF THE STATE OR NEIGHBORING PROPERTIES SHALL BE INSTALLED, CONSTRUCTED OR, IN THE CASE OF VEGETATIVE BUFFERS, PROTECTED FROM DISTURBANCE, AS A FIRST STEP IN THE LAND ALTERATION PROCESS.
11. ENGINEER OF RECORD IS THE ENGINEER RESPONSIBLE FOR THE DESIGN OF THE PROJECT.

    CONTACT: BRYAN D. FLYNN P.E.
    ATKINS, 4030 BOY SCOUT BLVD. SUITE 700
    TAMPA, FLORIDA 33607
    EMAIL: BRYAN.FLYNN@ATKINSGLOBAL.COM
    PHONE: 800-477-7275, FAX: 813-636-8583

SITE CLEARING AND PREPARATION NOTES:

12. PRIOR TO CLEARING/CONSTRUCTION SILT FENCE WILL BE INSTALLED OUTSIDE OF THE DRIPLINE OF EXISTING VEGETATION AND ALONG LIMITS OF CONSTRUCTION EASEMENTS. THIS FENCE SHALL REMAIN ERECTED AND MAINTAINED THROUGH THE DURATION OF CONSTRUCTION.
13. ALL CONSTRUCTION DEBRIS AND OTHER WASTE MATERIAL SHALL BE DISPOSED OF OFF-SITE IN ACCORDANCE WITH APPLICABLE REGULATIONS.
14. ALL EXCAVATED MATERIAL WILL BE PLACED FREE OF DEBRIS ON-SITE AND USED ON-SITE AS FILL AS SHOWN IN PLANS.

NOTICE TO MARINERS:

15. THE CONTRACTOR SHALL BE RESPONSIBLE FOR NOTIFYING THE COAST GUARD IN SUFFICIENT TIME TO ALLOW FOR PUBLICATION OF A NOTICE TO MARINERS. THE LOCAL COAST GUARD IS:

    COMMANDER
    7TH COAST GUARD DISTRICT
    BRICKEL PLAZA, FEDERAL BLDG., ROOM 406
    909 S.E. FIRST AVENUE
    MIAMI, FLORIDA 33131-3050
    ATTN: (LNM)

16. AREAS WHERE NATURAL RESOURCES (SEAGRASSES) ARE PRESENT WILL BE PROTECTED WITH TURBIDITY BARRIER THAT WILL BE MAINTAINED THROUGHOUT THE PROJECT.
17. DAMAGE TO ANY PROPERTY, UTILITIES, STRUCTURES OR NATURAL RESOURCES SHALL BE REPAIRED OR REPLACED BY THE CONTRACTOR IN A TIMELY MANNER AT THE CONTRACTOR'S EXPENSE.
18. DEBRIS, SUCH AS STUMPS, ROCKS, ROCK FRAGMENTS, ROOTS, LOGS, TRASH, VEGETATION, ETC. AND ANY OTHER OBJECTS (EXCEPT ARCHEOLOGICAL OR HISTORIC RESOURCES) THAT EXIST WITHIN THE PROJECT AREA OR ARE UNEARTHED DURING CONSTRUCTION OPERATIONS, SHALL BE REMOVED, TRANSPORTED, AND DISPOSED OF AT THE CITY LANDFILL AND SHOULD BE EXPECTED TO BE ENCOUNTERED DURING THE OPERATIONS AND WILL NOT CONSTITUTE A CHANGE OF CONDITION TO THE CONTRACT/AGREEMENT. REMOVAL AND DISPOSAL OF DEBRIS WILL BE THE SOLE RESPONSIBILITY OF THE CONTRACTOR IN ITS ENTIRETY. REMOVAL AND DISPOSAL OF DEBRIS AND OBSTRUCTIONS SHALL NOT BE PROVIDED FOR SEPARATELY FOR PAYMENT. ALL COSTS ASSOCIATED WITH THE REQUIRED DISPOSAL OF DEBRIS SHALL BE INCLUDED IN THE CONTRACT PRICE. THESE SPECIFICATIONS ARE NOT AN ALL-INCLUSIVE REFERENCE OF DEBRIS TYPES, WHICH MAY BE ENCOUNTERED. IT IS ANTICIPATED THAT DURING CLEARING/CONSTRUCTION ACTIVITY DEBRIS (INCLUDED BUT NOT LIMITED TO VEGETATION, TREES, ROOTS, ROCKS, BEDROCK, CONCRETE, ASPHALT, WOOD, TRASH, GARBAGE, UNUSABLE SOIL, METAL, ETC.) WILL BE ENCOUNTERED. THE CONTRACTOR SHALL BE PREPARED AND RESPONSIBLE FOR PROPER REMOVAL AND DISPOSAL.

REV	DATE	DESCRIPTION
A		
A		
A		
A		
A		
A		
A		
A		

ORIGINAL ISSUED DATE:

DATE:

NOTICE:
The information in this document was prepared by ATKINS, Inc. While ATKINS has taken all reasonable steps to ensure the accuracy and completeness of the information contained in this document, ATKINS assumes no responsibility for any deviations made by persons other than ATKINS personnel after the document leaves the possession of ATKINS, or for any deficiencies in the information contained herein. It is the responsibility of the recipient to verify the accuracy of the information contained herein. Any damage to property, personal injury or death, ill verification of the information contained herein and to further insure that no changes, alterations or modifications have been made to the original document, the recipient should contact ATKINS and request an electronic copy to be reviewed by computer or other electronic means unless it is first compared to the original. ATKINS makes no warranties, express or implied, concerning the accuracy of the information contained in any copy of this document transmitted or delivered by computer or other electronic means.

CLIENT: **CITY OF KEY WEST**
P.O. BOX 1409, KEY WEST, FL 33041

PROJECT: **REST BEACH RESTORATION PROJECT**

TITLE: PROJECT VICINITY MAP AND NOTES

ATKINS
4030 BOY SCOUT BLVD., SUITE 700
TAMPA, FL 33607
TEL: (813) 636-5700
FAX: (813) 636-5799
CERTIFICATE OF AUTHORIZATION NO. 4168

JOB NO.:	100029924
DRAWN:	J.L.P
DESIGN:	B.D.F.
CHECKED:	B.D.F.
APPROVED:	B.D.F.
SHEET NO.	C-001

PERMIT SUBMITTAL

User Name: 21829
Drawing Name: C:\Users\21829\appdata\local\temp\AcPublish_2664\C-001.dwg Jan 03, 2013 - 2:32pm

ENVIRONMENTAL PROTECTION

PART 1 GENERAL

1.1 SCOPE

THIS SECTION COVERS PREVENTION OF ENVIRONMENTAL DAMAGE AS THE RESULT OF OPERATIONS UNDER THIS CONTRACT. FOR THE PURPOSE OF THIS SPECIFICATION, ENVIRONMENTAL DAMAGE IS DEFINED AS THE PRESENCE OF HAZARDOUS PHYSICAL, CHEMICAL, OR BIOLOGICAL ELEMENTS OR AGENTS WHICH ADVERSELY AFFECT HUMAN HEALTH OR WELFARE; UNFAVORABLY ALTER ECOLOGICAL BALANCES; AFFECT OTHER SPECIES, BIOLOGICAL COMMUNITIES, OR ECOSYSTEMS; OR DEGRADE THE QUALITY OF THE ENVIRONMENT FOR AESTHETIC, CULTURAL, AND/OR HISTORICAL PURPOSES. THE CONTROL OF ENVIRONMENTAL DAMAGE REQUIRES CONSIDERATION OF LAND, WATER, AND AIR, AND INCLUDES MANAGEMENT OF VISUAL AESTHETICS, NOISE, SOLID WASTE, RADIANT ENERGY AND RADIOACTIVE MATERIALS, POLLUTANTS, AND OPERATIONS UNDER THIS CONTRACT.

1.2 QUALITY CONTROL

THE CONTRACTOR SHALL ESTABLISH AND MAINTAIN QUALITY CONTROL FOR ENVIRONMENTAL PROTECTION OF ALL ITEMS SET FORTH HEREIN. THE CONTRACTOR SHALL RECORD ON DAILY QUALITY CONTROL REPORTS OR ATTACHMENTS THERETO, ANY PROBLEMS IN COMPLYING WITH LAWS, REGULATIONS AND ORDINANCES, AND CORRECTIVE ACTION TAKEN.

1.3 PERMITS

THE CONTRACTOR SHALL COMPLY WITH ALL REQUIREMENTS UNDER THE TERMS AND CONDITIONS SET OUT IN ALL PERMIT(S) FOR WORK UNDER THIS CONTRACT.

1.4 SUBMITTALS

WITHIN TEN (10) CALENDAR DAYS AFTER THE DATE OF NOTICE OF AWARD, THE CONTRACTOR SHALL SUBMIT AN ENVIRONMENTAL PROTECTION PLAN FOR REVIEW AND ACCEPTANCE BY THE CITY/ENGINEER. ACCEPTANCE OF THE CONTRACTOR'S PLAN SHALL NOT RELIEVE THE CONTRACTOR OF HIS RESPONSIBILITY FOR ADEQUATE AND CONTINUING CONTROL OF POLLUTANTS AND OTHER ENVIRONMENTAL PROTECTION MEASURES. ACCEPTANCE OF THE PLAN IS CONDITIONAL AND PREDICATED ON SATISFACTORY PERFORMANCE DURING CONSTRUCTION. THE CITY/ENGINEER RESERVES THE RIGHT TO REQUIRE THE CONTRACTOR TO MAKE CHANGES TO THE ENVIRONMENTAL PROTECTION PLAN OR OPERATIONS IF THE CITY/ENGINEER DETERMINES THAT ENVIRONMENTAL PROTECTION REQUIREMENTS ARE NOT BEING MET. NO PHYSICAL WORK AT THE SITE SHALL BEGIN PRIOR TO ACCEPTANCE OF THE CONTRACTOR'S PLAN OR AN INTERIM PLAN COVERING THE WORK TO BE PERFORMED. THE ENVIRONMENTAL PROTECTION PLAN SHALL INCLUDE BUT NOT BE LIMITED TO THE FOLLOWING:

a. A LIST OF FEDERAL, STATE, AND LOCAL LAWS, REGULATIONS, AND PERMITS CONCERNING ENVIRONMENTAL PROTECTION, POLLUTION CONTROL, AND ABATEMENT THAT ARE APPLICABLE TO THE CONTRACTOR'S PROPOSED OPERATIONS AND THE REQUIREMENTS IMPOSED BY THOSE LAWS, REGULATIONS, AND PERMITS.

b. METHODS FOR PROTECTION OF FEATURES TO BE PRESERVED WITHIN AUTHORIZED WORK AREAS. THE CONTRACTOR SHALL PREPARE A LISTING OF METHODS TO PROTECT RESOURCES NEEDING PROTECTION, I.E., TREES, SHRUBS, VINES, GRASSES AND GROUND COVER, LANDSCAPE FEATURES, AIR AND WATER QUALITY, FISH AND WILDLIFE, SOIL, HISTORICAL, ARCHEOLOGICAL, AND CULTURAL RESOURCES.

c. PROCEDURES TO BE IMPLEMENTED TO PROVIDE THE REQUIRED ENVIRONMENTAL PROTECTION AND TO COMPLY WITH THE APPLICABLE LAWS AND REGULATIONS. THE CONTRACTOR SHALL PROVIDE WRITTEN ASSURANCE THAT IMMEDIATE CORRECTIVE ACTION WILL BE TAKEN TO CORRECT POLLUTION OF THE ENVIRONMENT DUE TO ACCIDENT, NATURAL CAUSES, OR FAILURE TO FOLLOW THE PROCEDURES SET OUT IN ACCORDANCE WITH THE ENVIRONMENTAL PROTECTION PLAN.

d. ENVIRONMENTAL MONITORING PLANS FOR THE JOB SITE, INCLUDING LAND, WATER, AIR, AND NOISE MONITORING.

e. SPILL PREVENTION. THE CONTRACTOR SHALL SPECIFY ALL POTENTIALLY HAZARDOUS SUBSTANCES TO BE USED ON THE JOB SITE AND INTENDED ACTIONS TO PREVENT ACCIDENTAL OR INTENTIONAL INTRODUCTION OF SUCH MATERIALS INTO THE AIR, GROUND, WATER, WETLANDS, OR DRAINAGE AREAS. THE PLAN SHALL SPECIFY THE CONTRACTOR'S PROVISIONS TO BE TAKEN TO MEET FEDERAL, STATE, AND LOCAL LAWS AND REGULATIONS REGARDING LABELING, STORAGE, REMOVAL, TRANSPORT, AND DISPOSAL OF POTENTIALLY HAZARDOUS SUBSTANCES.

f. SPILL REMEDIATION PLAN FOR CLEANUP OF ALL HAZARDOUS, TOXIC, OR PETROLEUM MATERIAL.

g. IDENTIFICATION OF THE PERSON WHO SHALL BE RESPONSIBLE FOR IMPLEMENTATION OF THE ENVIRONMENTAL PROTECTION PLAN. THE CONTRACTOR PERSONNEL RESPONSIBLE SHALL REPORT DIRECTLY TO THE CONTRACTOR'S TOP MANAGEMENT AND SHALL HAVE THE AUTHORITY TO ACT FOR THE CONTRACTOR IN ALL ENVIRONMENTAL PROTECTION MATTERS.

1.5 SUBCONTRACTORS

THE CONTRACTOR SHALL BE RESPONSIBLE FOR ENSURING THAT ALL SUBCONTRACTORS COMPLY WITH ALL ENVIRONMENTAL PROTECTION REQUIREMENTS.

1.6 NOTIFICATION

THE CITY/ENGINEER WILL NOTIFY THE CONTRACTOR IN WRITING OF ANY OBSERVED NONCOMPLIANCE WITH THE FEDERAL, STATE, OR LOCAL LAWS OR REGULATIONS, PERMITS AND OTHER ELEMENTS OF THE CONTRACTOR'S ENVIRONMENTAL PROTECTION PLAN. THE CONTRACTOR SHALL, AFTER RECEIPT OF SUCH NOTICE, INFORM THE CITY/ENGINEER OF PROPOSED CORRECTIVE ACTION AND TAKE SUCH ACTION AS MAY BE REQUIRED. IF THE CONTRACTOR FAILS TO COMPLY PROMPTLY, THE CITY/ENGINEER MAY ISSUE AN ORDER STOPPING ALL OR PART OF THE WORK UNTIL SATISFACTORY CORRECTIVE ACTION HAS BEEN TAKEN BY THE CONTRACTOR. NO TIME EXTENSIONS SHALL BE GRANTED OR COSTS OR DAMAGES ALLOWED TO THE CONTRACTOR FOR ANY SUCH SUSPENSION.
ADDITIONALLY, THE CONTRACTOR SHALL NOTIFY THE CITY/ENGINEER, IN WRITING, OF THE OCCURRENCE OF ENVIRONMENTAL INCIDENTS.

PART 2 PRODUCTS (NOT APPLICABLE)

PART 3 EXECUTION

3.1 PROTECTION OF ENVIRONMENTAL RESOURCES

3.1.1 GENERAL PROJECT ENVIRONMENTAL DESIGN AND INSTALLATION CRITERIA
AT ALL SITES, PROJECT PLANS SHOULD MINIMIZE DISTURBANCE TO EXISTING FEATURES AT THE SITE TO THE EXTENT POSSIBLE, INCLUDING VEGETATIVE, TOPOGRAPHIC, AND DRAINAGE PATTERN FEATURES. WETLAND IMPACTS (TEMPORARY ACCESS, DETOURS, STAGING AREAS, AND OTHER WORK AREA IMPACTS) TO PROJECT SITES SHOULD BE AVOIDED AND MAY REQUIRE SEPARATE PERMITTING ACTION. IN THE EVENT ENVIRONMENTAL PROTECTION MEASURES FAIL, THE CONTRACTOR SHALL IMPLEMENT PROCEDURES TO CONTROL AND CORRECT ENVIRONMENTAL DAMAGE.

3.1.2 PROTECTION OF WATER RESOURCES
THE CONTRACTOR SHALL KEEP CONSTRUCTION ACTIVITIES UNDER SURVEILLANCE, MANAGEMENT, AND CONTROL TO AVOID POLLUTION OF SURFACE, GROUND WATERS, AND WETLANDS. THE CONTRACTOR SHALL PLAN HIS OPERATION AND PERFORM ALL WORK NECESSARY TO MINIMIZE ADVERSE IMPACT OR VIOLATION OF THE WATER QUALITY STANDARD. SPECIAL MANAGEMENT TECHNIQUES AS SET OUT BELOW SHALL BE IMPLEMENTED TO CONTROL WATER POLLUTION BY THE LISTED CONSTRUCTION ACTIVITIES, WHICH ARE INCLUDED IN THIS CONTRACT. THE CONTRACTOR'S CONSTRUCTION METHODS SHALL PROTECT WETLAND AND SURFACE WATER AREAS FROM DAMAGE DUE TO MECHANICAL GRADING, EROSION, SEDIMENTATION AND TURBID DISCHARGES. THERE SHALL BE NO STORAGE OR STOCKPILING OF EQUIPMENT, TOOLS, OR MATERIALS WITHIN WETLANDS OR ALONG THE SHORELINE WITHIN THE LITTORAL ZONE UNLESS SPECIFICALLY AUTHORIZED.

3.1.2.1 MONITORING OF WATER AREAS
MONITORING OF WATER AREAS AFFECTED BY CONSTRUCTION ACTIVITIES SHALL BE THE RESPONSIBILITY OF THE CONTRACTOR. THE CONTRACTOR SHALL MONITOR ALL WATER AREAS AFFECTED BY CONSTRUCTION ACTIVITIES.

3.1.2.2 TURBIDITY
THE CONTRACTOR SHALL CONDUCT HIS OPERATIONS IN A MANNER TO MINIMIZE TURBIDITY AND SHALL CONFORM TO ALL WATER QUALITY STANDARDS AS PRESCRIBED BY CHAPTER 62-302, STATE OF FLORIDA, AND DEPARTMENT OF ENVIRONMENTAL PROTECTION (FDEP).

3.1.2.3 OIL, FUEL, AND HAZARDOUS SUBSTANCE SPILL PREVENTION AND MITIGATION
THE CONTRACTOR SHALL PREVENT OIL, FUEL, OR OTHER HAZARDOUS SUBSTANCES FROM ENTERING THE AIR, GROUND, DRAINAGE, LOCAL BODIES OF WATER, OR WETLANDS. THIS SHALL BE ACCOMPLISHED BY DESIGN AND PROCEDURAL CONTROLS. IN THE EVENT THAT A SPILL OCCURS DESPITE THE DESIGN AND PROCEDURAL CONTROLS, THE FOLLOWING SHALL OCCUR:

(1) IMMEDIATE ACTION SHALL BE TAKEN TO CONTAIN AND CLEANUP ANY SPILL OF OIL, FUEL OR OTHER HAZARDOUS SUBSTANCE.

(2) SPILLS SHALL BE IMMEDIATELY REPORTED TO THE CITY/ENGINEER.

(3) SPILL CONTINGENCY PLANNING SHALL BE STRICTLY IN ACCORDANCE WITH THE CRITERIA OF 40 CFR, PART 109.

(4) TO CONTROL THE SPREAD OF ANY POTENTIAL SPILL, ABSORBENT MATERIALS SHALL BE READILY AVAILABLE AND CAPABLE OF ABSORBING THE CONTENTS OF THE SINGLE LARGEST TANK.

(5) TO CONTROL THE SPREAD OF ANY POTENTIAL SPILL, THE CONTRACTOR SHALL PROVIDE A WRITTEN CERTIFICATION OF COMMITMENT OF MANPOWER, EQUIPMENT, AND MATERIALS REQUIRED TO EXPEDITIOUSLY CLEANUP AND DISPOSE OF SPILL MATERIALS.

a. SPILL PREVENTIVE SYSTEMS: SYSTEM DESIGN AND INSTALLATION REQUIREMENTS HAVE BEEN DISCUSSED AT THE BEGINNING OF THIS SECTION. TEMPORARY OR PORTABLE TANKS SHALL CONFORM TO APPLICABLE FEDERAL, STATE, AND LOCAL CODES AND REQUIREMENTS AND SHALL NOT BE PLACED WHERE THEY MAY BE AFFECTED BY STORM, FLOODING, OR WASHOUT. DIVERSIONARY STRUCTURES FOR SPILLS SHALL BE PUT IN PLACE IN ADVANCE WHERE PRACTICAL. BOTH SPILL PREVENTIVE SYSTEMS AND ANY DEVIATIONS FROM ASSOCIATED REQUIREMENTS MUST BE APPROVED BY THE CITY/ENGINEER PRIOR TO IMPLEMENTATION.

b. LIABILITIES: THE CONTRACTOR SHALL BE LIABLE IN THE AMOUNTS ESTABLISHED IN 40 CFR, PART 113 WHEN IT CAN BE SHOWN THAT OIL WAS DISCHARGED AS A RESULT OF WILLFUL NEGLIGENCE OR WILLFUL MISCONDUCT. THE PENALTY FOR FAILURE TO REPORT THE DISCHARGE OF OIL SHALL BE IN ACCORDANCE WITH THE PROVISION OF 33 CFR, PART 153.

3.1.3 WETLANDS PROTECTION
THE CONTRACTOR SHALL NOT ANCHOR, PLACE PIPELINES, OR STAGE EQUIPMENT IN A MANNER THAT WILL CAUSE ANY DAMAGE TO WETLANDS BEYOND THOSE SPECIFICALLY IDENTIFIED, ANTICIPATED, AND AUTHORIZED IN THESE SPECIFICATIONS AND ASSOCIATED DRAWINGS AND ENVIRONMENTAL DOCUMENTS. ANCHORING, PLACING PIPELINE, OR STAGING EQUIPMENT SHALL BE AVOIDED IN THESE SENSITIVE WETLAND AREAS. IF SUCH ACTIVITIES CANNOT BE DONE WITHOUT AFFECTING SENSITIVE AREAS OUTSIDE THE CONSTRUCTION AREA IDENTIFIED IN THE CONTRACT DOCUMENTS, THE ACTIVITIES SHALL CEASE, AND THE CITY/ENGINEER SHALL BE IMMEDIATELY NOTIFIED (NO LATER THAN THE MORNING FOLLOWING THE WORKING DAY IF THE INCIDENT OCCURS AFTER NORMAL WORKING HOURS). ANY ACTUAL INCIDENT INVOLVING DAMAGE TO, OR DISTURBANCE OF, WETLANDS SHALL BE REPORTED.

3.1.4 PROTECTION OF FISH AND WILDLIFE RESOURCES THE CONTRACTOR SHALL KEEP CONSTRUCTION ACTIVITIES UNDER SURVEILLANCE, MANAGEMENT, AND CONTROL TO MINIMIZE INTERFERENCE WITH, DISTURBANCE TO, AND DAMAGE OF FISH AND WILDLIFE.IN THE EVENT THAT A THREATENED OR ENDANGERED SPECIES IS HARMED AS A RESULT OF CONSTRUCTION ACTIVITIES, THE CONTRACTOR SHALL CEASE ALL WORK IMMEDIATELY AND NOTIFY THE CITY/ENGINEER.

3.1.5 ENDANGERED SPECIES PROTECTION - MANATEES
THE CONTRACTOR SHALL COMPLY WITH THE FOLLOWING CONDITIONS INTENDED TO PROTECT MANATEES FROM DIRECT PROJECT EFFECTS:

a. ALL PERSONNEL ASSOCIATED WITH THE PROJECT SHALL BE INSTRUCTED ABOUT THE PRESENCE OF MANATEES AND MANATEE SPEED ZONES, AND THE NEED TO AVOID COLLISIONS WITH AND INJURY TO MANATEES. THE CONTRACTOR SHALL ADVISE ALL CONSTRUCTION PERSONNEL THAT THERE ARE CIVIL AND CRIMINAL PENALTIES FOR HARMING, HARASSING, OR KILLING MANATEES WHICH ARE PROTECTED UNDER THE MARINE MAMMAL PROTECTION ACT, THE ENDANGERED SPECIES ACT, AND THE FLORIDA MANATEE SANCTUARY ACT.

b. ALL VESSELS ASSOCIATED WITH THE CONSTRUCTION PROJECT SHALL OPERATE AT "IDLE SPEED/NO WAKE" AT ALL TIMES WHILE IN THE IMMEDIATE AREA AND WHILE IN WATER WHERE THE DRAFT OF THE VESSEL PROVIDES LESS THAN A FOUR-FOOT CLEARANCE FROM THE BOTTOM. ALL VESSELS WILL FOLLOW ROUTES OF DEEP WATER WHENEVER POSSIBLE.

c. SILTATION OR TURBIDITY BARRIERS SHALL BE MADE OF MATERIAL IN WHICH MANATEES CANNOT BECOME ENTANGLED, SHALL BE PROPERLY SECURED, AND SHALL BE REGULARLY MONITORED TO AVOID MANATEE ENTANGLEMENT OR ENTRAPMENT. BARRIERS MUST NOT IMPEDE MANATEE MOVEMENT.

d. ALL ON-SITE PROJECT PERSONNEL ARE RESPONSIBLE FOR OBSERVING WATER-RELATED ACTIVITIES FOR THE PRESENCE OF MANATEE(S). ALL IN-WATER OPERATIONS, INCLUDING VESSELS, MUST BE SHUTDOWN IF A MANATEE(S) COMES WITHIN 50 FEET OF THE OPERATION. ACTIVITIES WILL NOT RESUME UNTIL THE MANATEE(S) HAS MOVED BEYOND THE 50-FOOT RADIUS OF THE PROJECT OPERATION, OR UNTIL 30 MINUTES ELAPSES IF THE MANATEE(S) HAS NOT REAPPEARED WITHIN 50 FEET OF THE OPERATION. ANIMALS MUST NOT BE HERDED AWAY OR HARASSED INTO LEAVING.

e. ANY COLLISION WITH OR INJURY TO A MANATEE SHALL BE REPORTED IMMEDIATELY TO THE FWC HOTLINE AT 1-888-404-FWCC. COLLISION AND/OR INJURY SHOULD ALSO BE REPORTED TO THE U.S. FISH AND WILDLIFE SERVICE IN VERO BEACH (1-772-562-3909) FOR SOUTH FLORIDA.

f. TEMPORARY SIGNS CONCERNING MANATEES SHALL BE POSTED PRIOR TO AND DURING ALL IN-WATER PROJECT ACTIVITIES. ALL SIGNS ARE TO BE REMOVED BY THE PERMITTEE UPON COMPLETION OF THE PROJECT. AWARENESS SIGNS THAT HAVE ALREADY BEEN APPROVED FOR THIS USE BY THE FLORIDA FISH AND WILDLIFE CONSERVATION COMMISSION (FWC) MUST BE USED. ONE SIGN MEASURING AT LEAST 3 FT. BY 4 FT. WHICH READS *CAUTION: MANATEE AREA* MUST BE POSTED. A SECOND SIGN MEASURING AT LEAST 81/2" BY 11" EXPLAINING THE REQUIREMENTS FOR "IDLE SPEED/NO WAKE" AND THE SHUT DOWN OF IN-WATER OPERATIONS MUST BE POSTED IN A LOCATION PROMINENTLY VISIBLE TO ALL PERSONNEL ENGAGED IN WATER-RELATED ACTIVITIES. APPROVED SIGN SUPPLIERS AND SIGN FORMAT ARE INCLUDED IN SECTION 3.3.

g. BOATS USED TO TRANSPORT PERSONNEL SHALL BE SHALLOW-DRAFT VESSELS, PREFERABLY OF THE LIGHT-DISPLACEMENT CATEGORY, WHERE NAVIGATIONAL SAFETY PERMITS. MOORING BUMPERS SHALL BE PLACED ON ALL BARGES, TUGS, AND SIMILAR LARGE VESSELS WHEREVER AND WHENEVER THERE IS A POTENTIAL FOR MANATEES TO BE CRUSHED BETWEEN TWO MOORED VESSELS. THE BUMPERS SHALL PROVIDE A MINIMUM STANDOFF DISTANCE OF 4 FEET.

NOTES CONTINUE OF SHEET C-003

REV.	BY	DATE	DESCRIPTION
1			
2			
3			
4			
5			
6			
7			
8			

ORIGINAL ISSUED DATE :

ENGINEER OF RECORD:
BRYAN D FLYNN - P.E. #70586

DATE:

NOTICE:
The information in this document was prepared by ATKINS, Inc. While ATKINS has taken all reasonable steps to assure the accuracy of the information contained in this document, it cannot guarantee that changes or alterations to this document will not be made by persons other than ATKINS personnel after the document leaves the possession of ATKINS. Changes or alterations may be safety related and result in damage to property, personal injury or death. If verification of the information contained in this document is needed, contact should be made directly with ATKINS. This document must be compared to the original hard copy, with certified raised seal, if applicable, in order to insure the accuracy of the information contained therein and to further insure that no changes, alterations or modifications have been made to the document. No reliance should ever be made on a documentation transmitted or reviewed by computer or other electronic means unless it is first compared to the original. ATKINS makes no warranties, express or implied, concerning the accuracy of the information contained in any document transmitted or reviewed by computer or other electronic means.

CLIENT
CITY OF KEY WEST
P.O. BOX 1409, KEY WEST, FL 33041

PROJECT
REST BEACH RESTORATION PROJECT

TITLE
ENVIRONMENTAL PROTECTION NOTES

ATKINS
4030 BOY SCOUT BLVD. SUITE 700 TAMPA, FL 33607 TEL. (813) 282-7275 FAX. (813) 282-9767
www.atkinsglobal.com FBPR CERTIFICATE OF AUTHORIZATION NO.24

JOB NO.:	100029924
DRAWN:	J.L.P
DESIGN:	B.D.F.
CHECKED:	B.D.F.
APPROVED:	B.D.F.
SHEET NO.	C-002

PERMIT SUBMITTAL

Drawing Name: C:\Users\21829\appdata\local\temp\AcPublish_6084\C-001.dwg Jan 03, 2013 – 2:35pm
User Name: 21829

ENVIRONMENTAL PROTECTION

NOTES CONTINUED FROM SHEET C-002

h. REPORT SUBMISSION: THE CONTRACTOR SHALL MAINTAIN A LOG DETAILING ANY MANATEE SIGHTING REPORTS DURING THE CONTRACT PERIOD. THE DATA SHALL BE RECORDED ON FORMS PROVIDED BY THE CITY/ENGINEER. ALL DATA IN ORIGINAL FORM SHALL BE FORWARDED DIRECTLY TO THE CITY/ENGINEER, WITHIN 10 DAYS OF COLLECTION AND COPIES OF THE DATA SHALL BE SUPPLIED TO THE CITY/ENGINEER. FOLLOWING PROJECT COMPLETION, A REPORT SUMMARIZING THE ABOVE INCIDENTS AND SIGHTINGS SHALL BE SUBMITTED TO THE FOLLOWING:

BRYAN D. FLYNN , P.E.
ATKINS
4030 W. BOY SCOUT BLVD.
TAMPA, FL 33607
(800) 477-7275

3.1.6 ENDANGERED SPECIES PROTECTION - SEA TURTLES & SMALLTOOTH SAWFISH
THE CONTRACTOR SHALL COMPLY WITH THE FOLLOWING CONSTRUCTION CONDITIONS FOR PROTECTION OF SEA TURTLES & SMALLTOOTH SAWFISH:

a. THE CONTRACTOR SHALL INSTRUCT ALL PERSONNEL ASSOCIATED WITH THE PROJECT OF THE POTENTIAL PRESENCE OF THESE SPECIES AND THE NEED TO AVOID COLLISIONS WITH SEA TURTLES AND SMALLTOOTH SAWFISH. ALL CONSTRUCTION PERSONNEL ARE RESPONSIBLE FOR OBSERVING WATER-RELATED ACTIVITIES FOR THE PRESENCE OF THESE SPECIES.

b. THE CONTRACTOR SHALL ADVISE ALL CONSTRUCTION PERSONNEL THAT THERE ARE CIVIL AND CRIMINAL PENALTIES FOR HARMING, HARASSING, OR KILLING SEA TURTLES & SMALLTOOTH SAWFISH, WHICH ARE PROTECTED UNDER THE ENDANGERED SPECIES ACT OF 1973.

c. SILTATION BARRIERS SHALL BE MADE OF MATERIAL IN WHICH A SEA TURTLE OR SMALLTOOTH SAWFISH CANNOT BECOME ENTANGLED. SILTATION BARRIERS SHALL BE PROPERLY SECURED AND REGULARLY MONITORED TO AVOID PROTECTED SPECIES ENTRAPMENT. BARRIERS MAY NOT BLOCK SEA TURTLE OR SMALLTOOTH SAWFISH ENTRY TO OR EXIT FROM DESIGNATED CRITICAL HABITAT WITHOUT PRIOR AGREEMENT FROM THE NATIONAL MARINE FISHERIES SERVICE'S PROTECTED RESOURCES DIVISION, ST. PETERSBURG, FLORIDA.

d. ALL VESSELS ASSOCIATED WITH THE CONSTRUCTION PROJECT SHALL OPERATE AT "NO WAKE/IDLE" SPEEDS AT ALL TIMES WHILE IN THE CONSTRUCTION AREA AND WHILE IN WATER DEPTHS WHERE THE DRAFT OF THE VESSEL PROVIDES LESS THAN A FOUR-FOOT CLEARANCE FROM THE BOTTOM. ALL VESSELS WILL PREFERENTIALLY FOLLOW DEEP-WATER ROUTES (E.G., MARKED CHANNELS) WHENEVER POSSIBLE.

e. IF A SEA TURTLE OR SMALLTOOTH SAWFISH IS SIGHTED WITHIN 100 YARDS OF THE ACTIVE DAILY CONSTRUCTION OPERATION OR VESSEL MOVEMENT, ALL APPROPRIATE PRECAUTIONS SHALL BE IMPLEMENTED BY THE CONTRACTOR TO ENSURE ITS PROTECTION. THESE PRECAUTIONS SHALL INCLUDE CESSATION OF OPERATION OF ANY MOVING EQUIPMENT CLOSER THAN 50 FEET OF A SEA TURTLE OR SMALLTOOTH SAWFISH. OPERATION OF ANY MECHANICAL CONSTRUCTION EQUIPMENT SHALL CEASE IMMEDIATELY IF A SEA TURTLE OR SMALLTOOTH SAWFISH IS SEEN WITHIN A 50 - FT RADIUS OF THE EQUIPMENT. ACTIVITIES MAY NOT RESUME UNTIL THE PROTECTED SPECIES HAS DEPARTED THE PROJECT AREA OF ITS OWN VOLITION.

f. ANY COLLISION WITH AND/OR INJURY TO A SEA TURTLE OR SMALLTOOTH SAWFISH SHALL BE REPORTED IMMEDIATELY TO THE CITY/ENGINEER AND TO THE NATIONAL MARINE FISHERIES PROTECTED RESOURCES DIVISION (727-824-5312) AND TO THE LOCAL AUTHORIZED SEA TURTLE STRANDING/RESCUE ORGANIZATION.

3.1.7 SEAGRASS AND HARDBOTTOM RESOURCE PROTECTION MEASURES

a. THE CONTRACTOR SHALL INSTRUCT ALL PERSONNEL ASSOCIATED WITH THE PROJECT OF THE POTENTIAL PRESENCE OF SEAGRASSES, ESPECIALLY THE FEDERALLY-LISTED THREATENED JOHNSON'S SEAGRASS (HALOPHLIA JOHNSONII), AND THE NEED TO AVOID CONTACT WITH SEAGRASSES.

b. ALL CONSTRUCTION PERSONNEL SHALL BE ADVISED THAT THERE ARE CIVIL AND CRIMINAL PENALTIES FOR HARMING OR DESTROYING SEAGRASSES, ESPECIALLY JOHNSON'S SEAGRASS WHICH IS PROTECTED UNDER THE ENDANGERED SPECIES ACT OF 1973, AS AMENDED. THE CONTRACTOR MAY BE HELD RESPONSIBLE FOR ANY SEAGRASSES HARMED OR DESTROYED DUE TO CONSTRUCTION ACTIVITIES.

c. THE CONTRACTOR SHALL NOT ANCHOR, PLACE PIPELINE, OR STAGE EQUIPMENT IN A MANNER THAT WILL CAUSE ANY DAMAGE TO SEAGRASSES OR HARDBOTTOMS. ANCHORING, PLACING PIPELINE, OR STAGING EQUIPMENT SHALL AVOID THESE SENSITIVE AREAS. IF SUCH ACTIVITIES CANNOT BE DONE WITHOUT AFFECTING THESE SENSITIVE AREAS, THE ACTIVITIES SHALL CEASE AND THE CITY/ENGINEER SHALL BE IMMEDIATELY NOTIFIED (NO LATER THAN THE MORNING FOLLOWING THE NEXT WORKING DAY IF THE INCIDENT OCCURS AFTER NORMAL WORKING HOURS). ANY ACTUAL OR POTENTIAL INCIDENT INVOLVING DAMAGE TO, OR DISTURBANCE OF, SEAGRASSES OR HARDBOTTOMS SHALL BE REPORTED.

3.1.8 PROTECTION OF AIR RESOURCES
THE CONTRACTOR SHALL KEEP CONSTRUCTION ACTIVITIES UNDER SURVEILLANCE, MANAGEMENT, AND CONTROL TO MINIMIZE POLLUTION OF AIR RESOURCES. ALL ACTIVITIES, EQUIPMENT, PROCESSES AND WORK OPERATED OR PERFORMED BY THE CONTRACTOR IN ACCOMPLISHING THE SPECIFIED CONSTRUCTION SHALL BE IN STRICT ACCORDANCE WITH THE APPLICABLE AIR POLLUTION STANDARDS OF THE STATE OF FLORIDA (FLORIDA STATUTE, CHAPTER 403 AND OTHERS AND CHAPTERS 200 SERIES OF THE FAC) AND ALL FEDERAL EMISSION AND PERFORMANCE LAWS AND STANDARDS, INCLUDING THE U.S. ENVIRONMENTAL PROTECTION AGENCY'S AMBIENT AIR QUALITY STANDARDS. ODORS SHALL BE CONTROLLED AT ALL TIMES FOR ALL CONSTRUCTION ACTIVITIES.

3.1.9 PROTECTION FROM SOUND INTRUSIONS THE CONTRACTOR SHALL KEEP CONSTRUCTION ACTIVITIES UNDER SURVEILLANCE AND CONTROL TO MINIMIZE DAMAGE TO THE ENVIRONMENT BY NOISE.

3.2 APPROVED MANATEE EDUCATION SUPPLIERS AND SAMPLE SIGN

ASAP SIGNS & DESIGNS
624-B PINELLAS STREET
CLEARWATER, FL 33756
PHONE: (727) 443-4878
FAX: (727) 442-7573
WWW.ASAPSIGNS.BIZ

WILDERNESS GRAPHICS, INC.
P. O. BOX 1635
TALLAHASSEE, FL 32302
PHONE: (850) 224-6414
FAX: (850) 561-3943
WWW.WILDERNESSGRAPHICS.COM

CAPE CORAL SIGNS & DESIGNS
1311 DEL PRADO BOULEVARD
CAPE CORAL, FL 33990
PHONE: (239) 772-9992
FAX: (239) 772-3848

MUNICIPAL SUPPLY & SIGN CO.
1095 FIFTH AVENUE, NORTH
P. O. BOX 1765
NAPLES, FL 33939-1765
PHONE: (800) 329-5366 OR
(239) 262-4639
FAX: (239) 262-4645
WWW.MUNICIPALSIGNS.COM

VITAL SIGNS
104615 OVERSEAS HIGHWAY
KEY LARGO, FL 33037
PHONE: (305) 451-5133
FAX: (305) 451-5163
WWW.VITALSIGNSFLORIDA.COM

UNIVERSAL SIGNS & ACCESSORIES
2912 ORANGE AVENUE
FT. PIERCE, FL 34947
PHONE: (800) 432-0331 OR
(772) 461-0665
FAX: (772) 461-0669
WWW.UNIVERSALSIGNSFL.COM

NEW CITY SIGNS
1739 28TH STREET N.
ST. PETERSBURG, FL 33713
PHONE: (727) 323-7897
FAX: (727) 323-1897
WWW.NEWCITYSIGNS.COM

UNITED RENTALS HIGHWAY TECHNOLOGIES
309 ANGLE ROAD
FT. PIERCE, FL 34947
PHONE: (772) 489-8772
OR (800) 489-8758 (FL ONLY)
FAX: (772) 489-8757
WWW.UR.COM

PERMIT SUBMITTAL

REV. NO.	DATE	DESCRIPTION

ORIGINAL ISSUED DATE:

DATE:

NOTICE:
The information in this document was prepared by ATKINS, Inc. While ATKINS has taken all reasonable steps to ensure the accuracy of the information contained in this document, it cannot be held responsible for any alterations or modifications to this document made by persons other than ATKINS personnel after the document leaves the possession of ATKINS. Changes or alterations to this document may be made only by ATKINS. It is the responsibility of the recipient to ensure that any information contained in this document is used for its intended purpose. ATKINS shall not be liable for any damage to property, personal injury or death. In verification of the information contained in this document is needed, contact should be made directly with ATKINS.
This document is the property of ATKINS. The recipient agrees that this document shall not be reproduced nor shall it be disclosed to any other parties without the express written consent of ATKINS, if applicable. In order to insure the accuracy of the information contained herein and to further insure that no changes, alterations or modifications have been made to the document, the recipient should compare the document with the original document on file with ATKINS. This document is provided "as is" and ATKINS makes no warranties, express or implied, concerning the accuracy of the original. ATKINS makes no warranties, express or implied, concerning the accuracy of this document when converted to any document format or delivered by computer or other electronic means.

CLIENT
CITY OF KEY WEST
P.O. BOX 1409, KEY WEST, FL 33041

PROJECT
REST BEACH RESTORATION PROJECT

TITLE
ENVIRONMENTAL PROTECTION NOTES

ATKINS
4030 BOY SCOUT BLVD.
SUITE 700
TAMPA, FL 33607
TEL (813) 282-7275
FAX (813) 282-7737

JOB NO.:	100029924
DRAWN:	J.L.P
DESIGN:	B.D.F.
CHECKED:	B.D.F.
APPROVED:	B.D.F.
SHEET NO.	C-003

User Name: 21829
Drawing Name: C:\Users\21829\appdata\local\temp\AcPublish_8364\C-001.dwg Jan 03, 2013 - 2:39pm

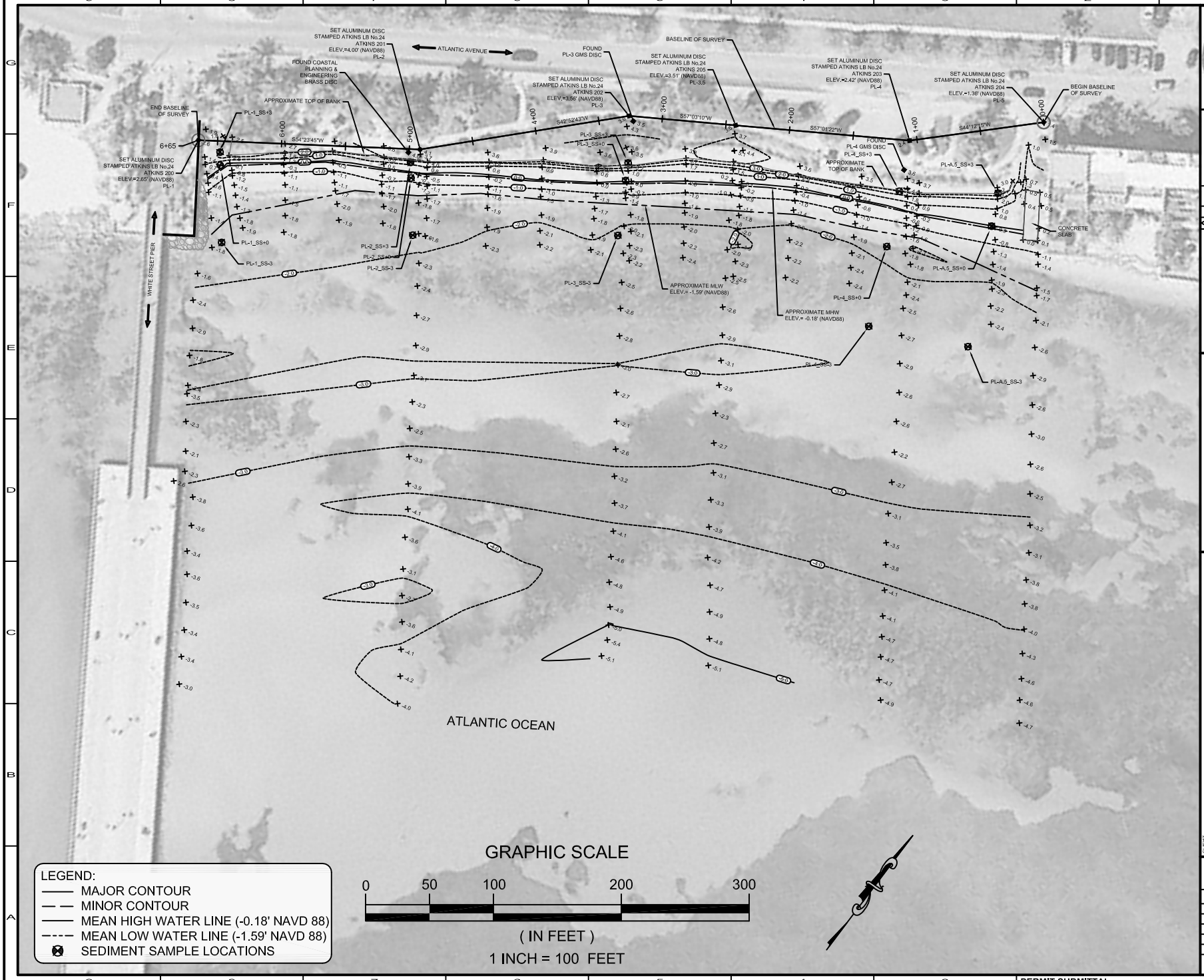

SEAL OF THE CITY OF KEY WEST FLORIDA

REV.	BY	DATE	DESCRIPTION
A			
B			
C			
D			
E			
F			
G			

ORIGINAL ISSUED DATE:

DATE:

CHANGES OF RECORD
BRYAN D. FINN P.E. No. 61008

NOTICE:
The information in this document was prepared by ATKINS, Inc. While ATKINS has taken all reasonable steps to assure the accuracy of the information contained in this document, ATKINS assumes no responsibility for the accuracy of the information if it is made by persons other than ATKINS personnel after the document leaves the possession of ATKINS, or if it is used for purposes other than those intended at the time of its preparation, or if it is used without all pages of the document being present. It is the responsibility of the user of this document to insure the accuracy of the information contained in this document is needed, contact should be made directly with ATKINS.
This document is instrument of service and is the property of ATKINS. It is the intended use of the original ATKINS document. If the document is reproduced or modified and reused or reproduced, or reviewed by computer or other electronic means unless it is first compared to the original, ATKINS makes no warranties, express or implied, concerning the accuracy of the reproduced or modified document or any document transmitted or otherwise reviewed by computer or other electronic means.

CLIENT:
CITY OF KEY WEST
P.O. BOX 1409, KEY WEST, FL 33041

PROJECT:
REST BEACH
RESTORATION PROJECT

TITLE:
EXISTING GROUND SURVEY AND SEDIMENT SAMPLE LOCATIONS

ATKINS
ATKINS NORTH AMERICA, INC.
2101 W. CYPRESS CREEK ROAD
FORT LAUDERDALE, FLORIDA 33309
TEL: (954) 486-9776
FAX: (954) 486-9787
WWW.ATKINSGLOBAL.COM

JOB NO.:	100029924
DRAWN:	J.L.P
DESIGN:	B.D.F.
CHECKED:	B.D.F.
APPROVED:	B.D.F.
SHEET NO.	C-100

PERMIT SUBMITTAL

User Name: 21685
Drawing Name: W:\Projects\Rest Beach\Key\Permit Submittal\Art\C-100.dwg Jan 14, 2013 - 11:06am

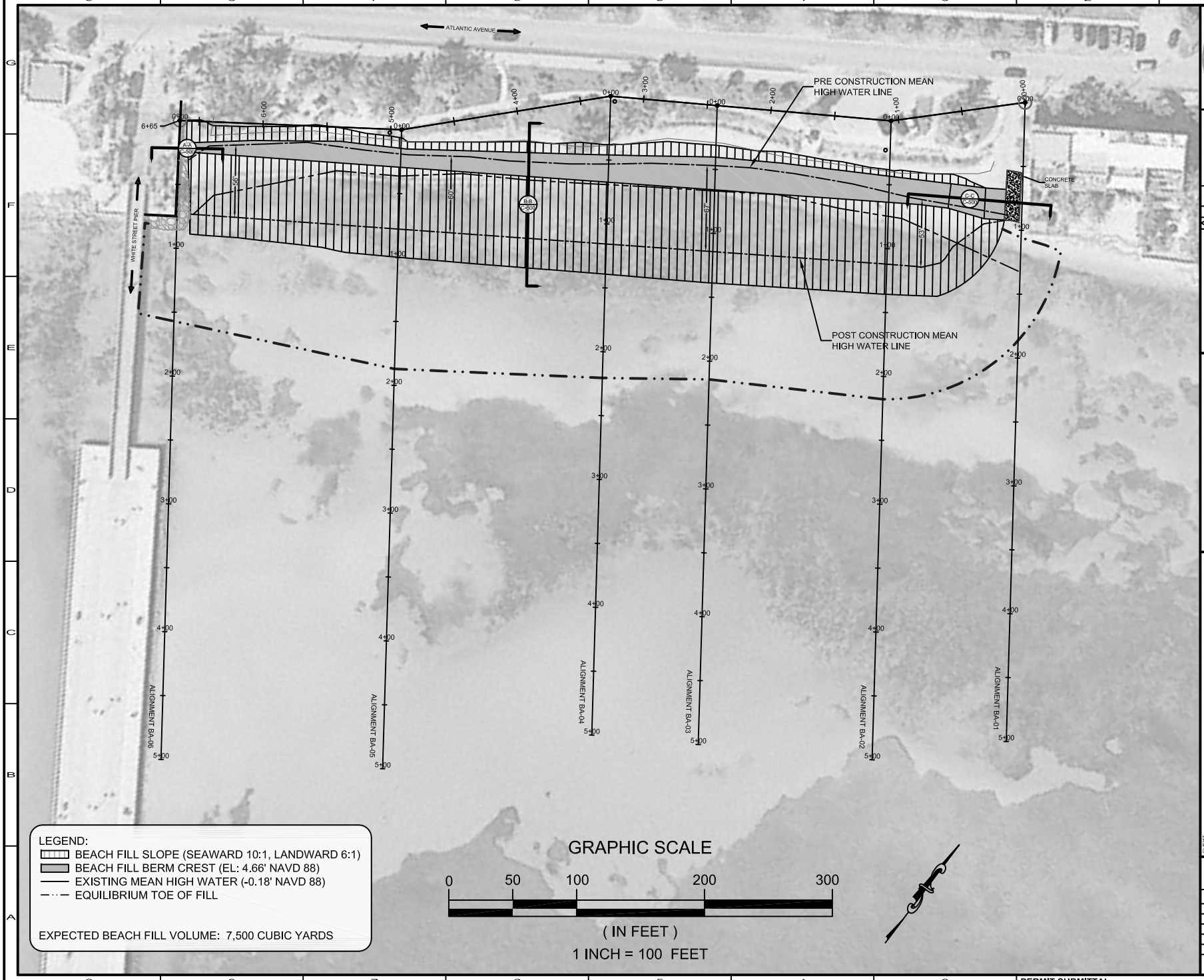

PERMIT SUBMITTAL

REV.	BY	DATE	DESCRIPTION
A			
A			
A			
A			
A			
A			
A			
A			

ORIGINAL ISSUED DATE:

SEAL OF THE CITY OF KEY WEST FLORIDA

SEAL OF RECORD
BRYAN D. FINN P.E. FL #70555

DATE:

NOTICE:
The information in this document was prepared by ATKINS, Inc. While ATKINS has taken all reasonable steps to assure the accuracy of the information contained in this document, ATKINS assumes no responsibility for the information contained herein if it is made by persons other than ATKINS personnel after the document leaves the possession of ATKINS, or if it is used for purposes other than those intended at the time of its preparation, or if it is used without obtaining the written consent of ATKINS. It is damage to property, personal injury or death. In verification of the information contained herein and to further insure that no changes, alterations or modifications have been made to the original ATKINS document, contact should be made directly with ATKINS. This document is protected by copyright and may not be altered or edited without written consent of ATKINS. ATKINS makes no warranties, express or implied, concerning the accuracy of the information contained in any document transmitted in electronic or other electronic means.

CLIENT: CITY OF KEY WEST
P.O. BOX 1409, KEY WEST, FL 33041

PROJECT: REST BEACH RESTORATION PROJECT

TITLE: PROJECT DESIGN - BEACH FILL AREA

ATKINS
ATKINS NORTH AMERICA, INC.
CERTIFICATE OF AUTHORIZATION NO. 00000970
2030 W. C. STREET
TAMPA, FL 33607
PHONE (813) 204-2175
FAX (813) 204-2176

JOB NO.:	100029924
DRAWN:	J.L.P
DESIGN:	B.D.F.
CHECKED:	B.D.F.
APPROVED:	B.D.F.
SHEET NO.	C-300

User Name: 21685
Drawing Name: W:\Projects\Rest Beach\dwg\Permit Submittal\Art1\C-300.dwg Jan 14, 2013 - 11:17am

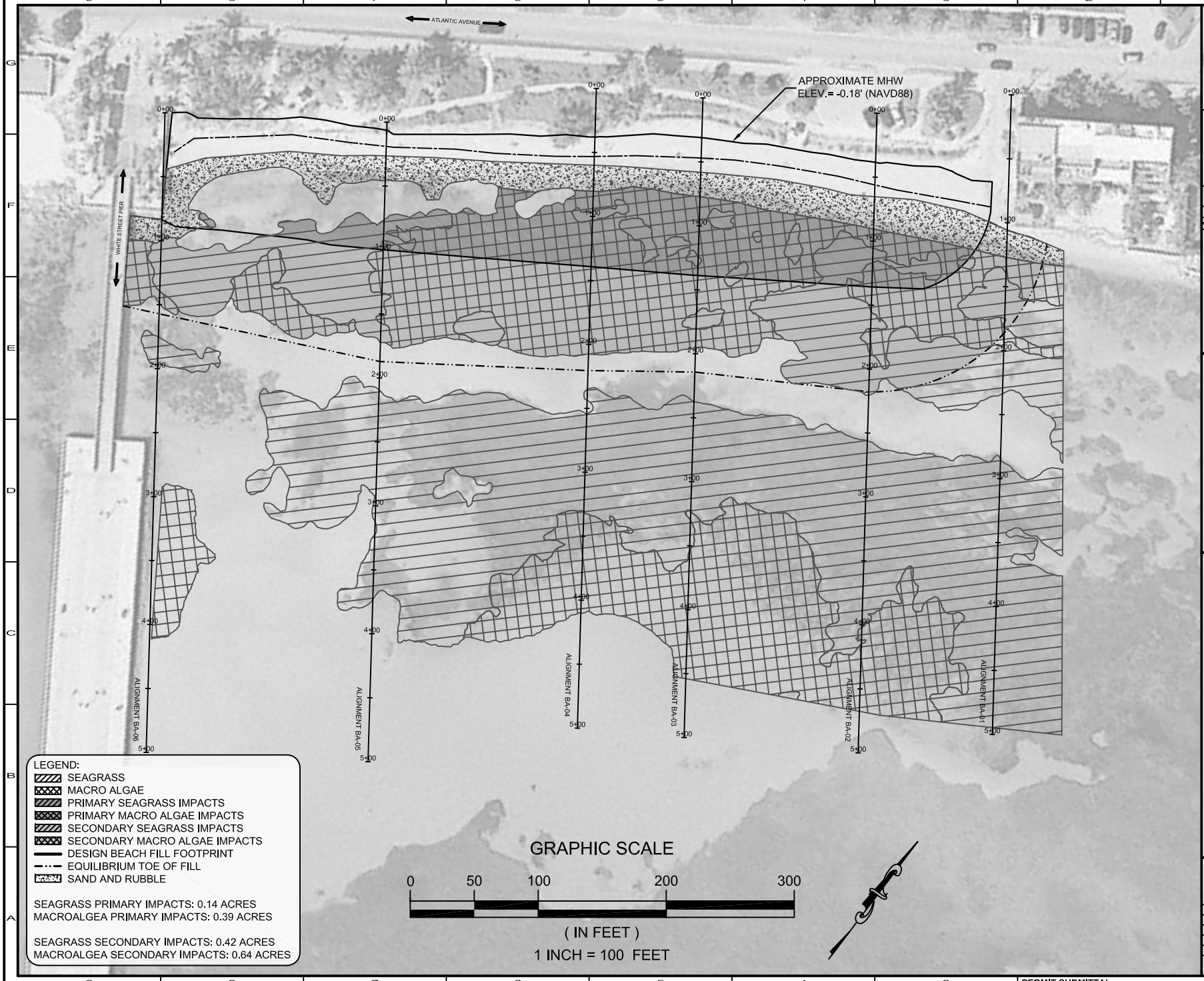

PERMIT SUBMITTAL

REV.	BY	DATE	DESCRIPTION
A			
A			
A			
A			
A			
A			
A			
A			
A			
A			

ORIGINAL ISSUED DATE:

DATE:

NOTICE:
The information in this document was prepared by ATKINS, Inc. While ATKINS has taken all reasonable steps to assure the accuracy of the information contained in this document, ATKINS assumes no responsibility for any errors or omissions which may be made by persons other than ATKINS personnel after the document leaves the possession of ATKINS. ATKINS makes no warranties, express or implied, concerning the accuracy of this information contained herein and its suitability for any purpose. In order to insure the accuracy of the information contained herein and to further insure that no changes, alterations or modifications have been made to the document by persons other than ATKINS personnel, contact should be made directly with ATKINS. This document is intended for the use of the client to whom it is addressed and, if applicable, its consultants and agents. Reliance on or use by any other person or entity is at their own risk. If this document is provided in electronic or digital format, the recipient agrees that, within 30 days after receipt, it will verify the document by comparing it to the original. ATKINS makes no warranties, express or implied, concerning the accuracy of the electronic or digital data after the 30 day acceptance period or after it has been altered by computer or other electronic means.

CLIENT
CITY OF KEY WEST
P.O. BOX 1409, KEY WEST, FL 33041

PROJECT
REST BEACH
RESTORATION PROJECT

TITLE
EXISTING AQUATIC RESOURCE MAP

ATKINS
1000 NW 57th COURT, SUITE 700
MIAMI, FL 33126
PHONE: (305) 592-5000
FAX: (813) 282-7275
CERTIFICATE OF AUTHORIZATION #: 00000970

JOB NO.:	100029924
DRAWN:	J.L.P
DESIGN:	B.D.F.
CHECKED:	B.D.F.
APPROVED:	B.D.F.
SHEET NO.	C-400

User Name: 21685
Drawing Name: W:\Projects\Rest Beach\dwg\Permit Submittal\Art1\C-400.dwg Jan 14, 2013 - 11:19am

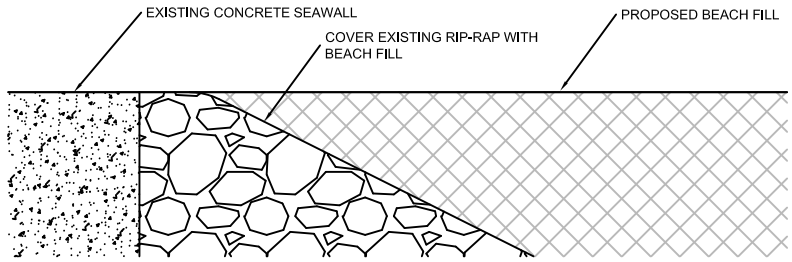

TYPICAL SECTION A-A: BEACH FILL TIE-IN WITH WESTERN RIP-RAP

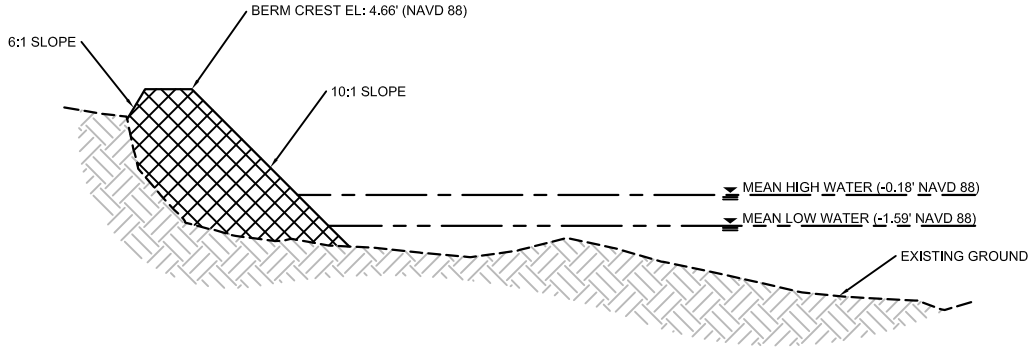

TYPICAL SECTION B-B: BEACH FILL TEMPLATE

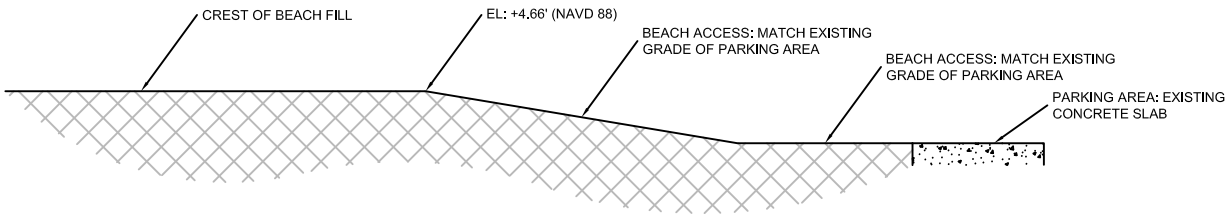

TYPICAL SECTION C-C: BEACH ACCESS TIE-IN

SEAL OF THE CITY OF KEY WEST, FLORIDA

REV.	BY	DATE	DESCRIPTION

ORIGINAL ISSUED DATE:

DATE:

NOTICE:
The information in this document was prepared by ATKINS, Inc. While ATKINS has taken all reasonable steps to ensure the accuracy and validity of the information contained in this document, it is the responsibility of the recipient to independently verify all of the information made by persons other than ATKINS personnel after the document leaves the control of ATKINS. Changes, alterations or modifications to the information contained in this document may cause damage to property, personal injury or death. In verification of the information contained herein and to further insure that no changes, alterations or modifications have been made to the document since it left the control of ATKINS, the recipient should compare the document with the original as delivered and if applicable, in order to insure the accuracy of the information contained herein and to further insure that no changes, alterations or modifications have been made to the document since it left the control of ATKINS, the recipient should compare the document with the original as delivered and if applicable, in order to insure the accuracy of the information contained herein and to further insure that no changes, alterations or modifications have been made to the document since it left the control of ATKINS, the recipient should compare the document with the original. ATKINS makes no warranties, express or implied, concerning the accuracy of this document, including without limitation of fitness for any purpose or other electronic means.

CLIENT: CITY OF KEY WEST
P.O. BOX 1409, KEY WEST, FL 33041

PROJECT: REST BEACH RESTORATION PROJECT

TITLE: TYPICAL PROJECT DESIGN DETAILS

ATKINS
ATKINS NORTH AMERICA INC.
SUITE 700
MIAMI, FL 33137
TEL (305) 633-5100
FAX (305) 633-5101
CERTIFICATE OF AUTHORIZATION NO. 6708

JOB NO.:	100029924
DRAWN:	J.L.P
DESIGN:	B.D.F.
CHECKED:	B.D.F.
APPROVED:	B.D.F.
SHEET NO.:	C-500

PERMIT SUBMITTAL

User Name: 21829
Drawing Name: W:\Projects\Rest Beach\dwg\Permit Submittal\Art1\C-500.dwg Jun 03, 2013 - 2:42pm

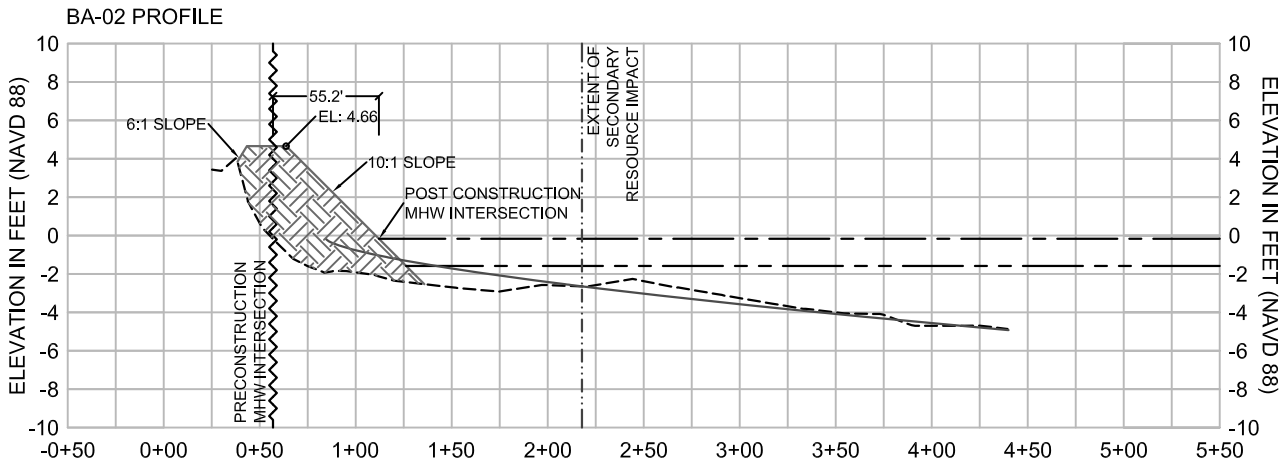

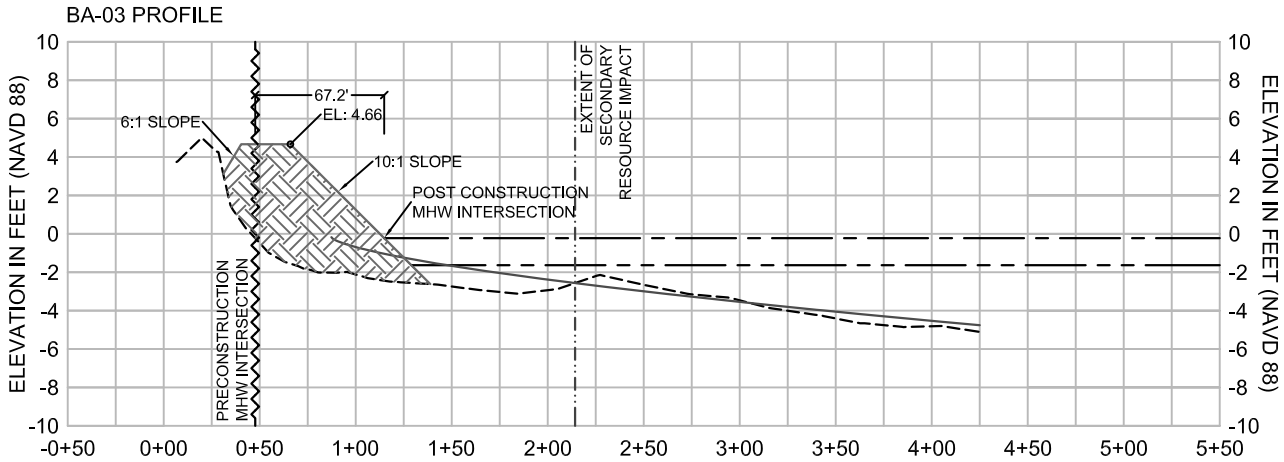

LEGEND:
- EXISTING GROUND
- DESIGN BEACH FILL
- MEAN HIGH WATER (-0.18 NAVD 88)
- MEAN LOW WATER (-1.59 NAVD 88)
- EQUILIBRATED FILL TEMPLATE
- EQUILIBRIUM TOE OF FILL
- PRE-CONSTRUCTION MHW INTERSECTION

VERTICAL SCALE: 1" = 10'
HORIZONTAL SCALE: 1" = 100'

PERMIT SUBMITTAL

REV	BY	DATE	DESCRIPTION

ORIGINAL ISSUED DATE:

NOTICE:
The information in this document was prepared by ATKINS, Inc. While ATKINS has taken all reasonable steps to ensure the accuracy of the information contained in this document, ATKINS cannot guarantee the accuracy of the information contained in it. If the made by persons other than ATKINS personnel after the document leaves the possession of ATKINS, or if the document is used for purposes other than those for which it was prepared, ATKINS makes no representations or warranties, express or implied, concerning the accuracy of damage to property, personal injury or death. In verification of the information contained herein and to further insure that no changes, alterations or modifications have been made to the document, it is the responsibility of the user of this document to compare it with the original. It is significant, in order to insure the accuracy of the information contained herein and to further insure that no changes, alterations or modifications have been made to the document, it is the responsibility of the user of this document to compare it with the original. ATKINS makes no warranties, express or implied, concerning the accuracy of the information contained in any copy of this document transmitted or otherwise reproduced or reviewed by computer or other electronic means, unless it is first, compared to the original. This document is the property of ATKINS and shall not be reproduced or used without written consent of ATKINS.

CLIENT: CITY OF KEY WEST
P.O. BOX 1409, KEY WEST, FL 33041

PROJECT: REST BEACH RESTORATION PROJECT

TITLE: PROJECT DESIGN - BEACH FILL PROFILES

ATKINS

JOB NO:	100029924
DRAWN:	J.L.P
DESIGN:	B.D.F.
CHECKED:	B.D.F.
APPROVED:	B.D.F.
SHEET NO:	C-600

User Name: 21685
Drawing Name: C:\temp\AcPublish_3340\C-600.dwg Jan 11, 2013 - 11:23am

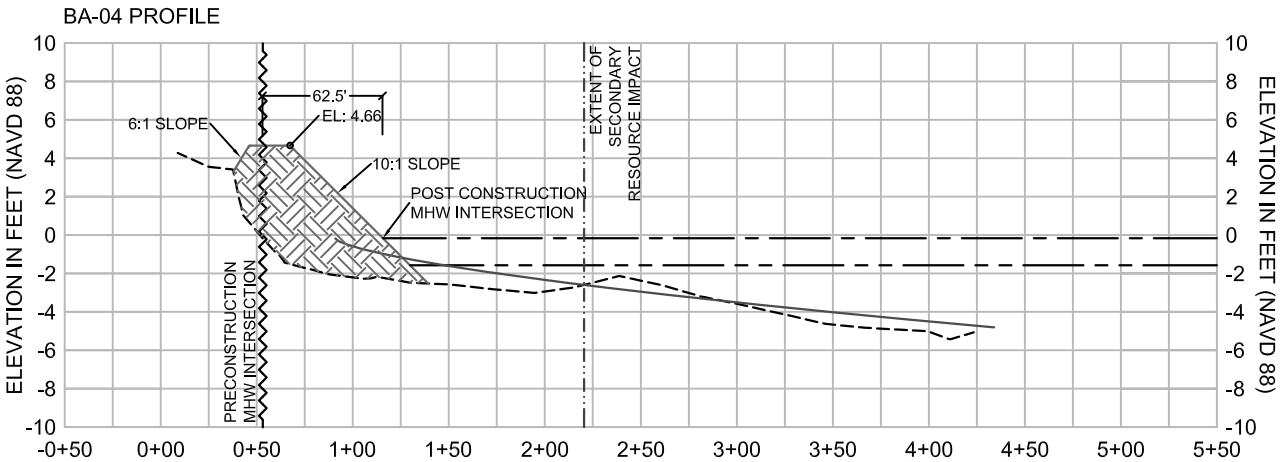

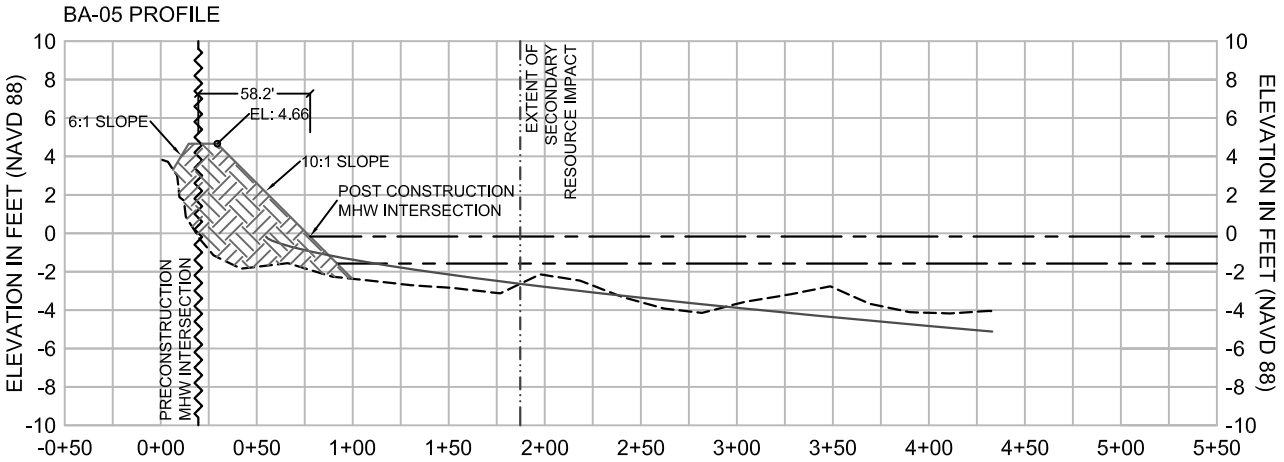

LEGEND:
- EXISTING GROUND
- DESIGN BEACH FILL
- MEAN HIGH WATER (-0.18 NAVD 88)
- MEAN LOW WATER (-1.59 NAVD 88)
- EQUILIBRATED FILL TEMPLATE
- EQUILIBRIUM TOE OF FILL
- PRE-CONSTRUCTION MHW INTERSECTION

VERTICAL SCALE: 1" = 10'
HORIZONTAL SCALE: 1" = 100'

REV.	BY	DATE	DESCRIPTION
A			
A			
A			
A			
A			
A			
A			
A			

ORIGINAL ISSUED DATE:

DATE:

NOTICE:
The information in this document was prepared by ATKINS, Inc. While ATKINS has taken all reasonable steps to ensure the accuracy of the information contained in this document, ATKINS assumes no responsibility for the information contained in it. Use made by persons other than ATKINS personnel after the document leaves the possession of ATKINS is at the sole risk of the person using the document. It is damage to property, personal injury or death. In verification of the information contained herein and to further insure that no changes, alterations or modifications have been made to the original, ATKINS makes no warranties, express or implied, concerning the accuracy of the information contained in any document transmitted or otherwise made available by computer or other electronic means, unless it is first compared to the original, ATKINS makes no warranties, express or implied, concerning the accuracy of the information contained in any document transmitted or otherwise made available by computer or other electronic means.

CLIENT
CITY OF KEY WEST
P.O. BOX 1409, KEY WEST, FL 33041

PROJECT
REST BEACH RESTORATION PROJECT

TITLE
PROJECT DESIGN - BEACH FILL PROFILES

ATKINS
ATKINS NORTH AMERICA INC.
SUITE 700
TAMPA, FL 33607
TEL (813) 282-7275
FAX (813) 282-9797
COORDINATE SYSTEM:
NAD 83/HARN STATE PLANE FLORIDA WEST ZONE

JOB NO.:	100029924
DRAWN:	J.L.P
DESIGN:	B.D.F.
CHECKED:	B.D.F.
APPROVED:	B.D.F.
SHEET NO.:	C-601

PERMIT SUBMITTAL

User Name: 21685
Drawing Name: C:\temp\AcPublish_3340\C-600.dwg Jan 11, 2013 - 11:23am

BERM X-SECTION AREA: 287 S.F.

BEACH LENGTH: 60 L.F.

BERM VOLUME: 638 C.Y.

PROPOSED BEACH ELEV.: 2'-4'

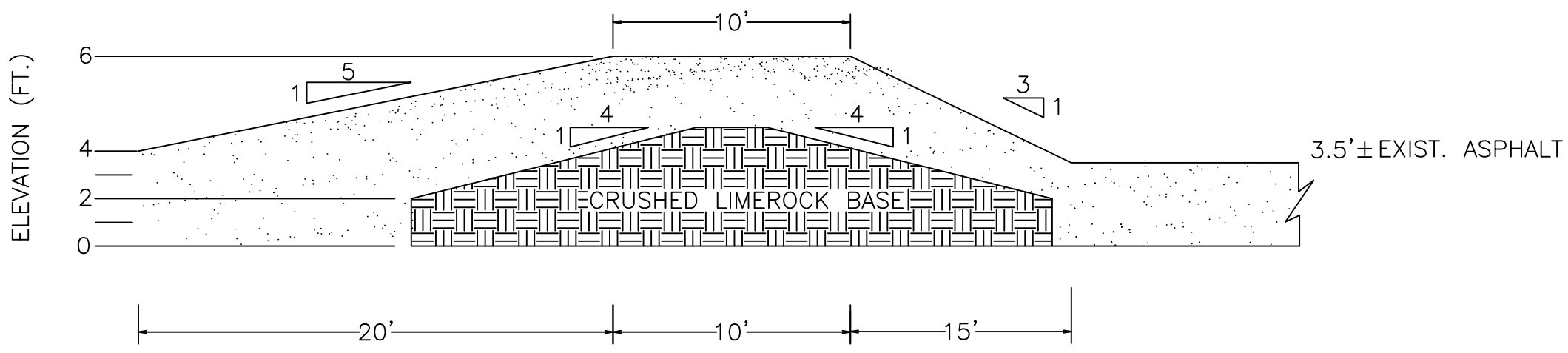

DOG BEACH BERM SECTION

N.T.S.

SEAL OF THE CITY OF KEY WEST, FLORIDA

G. M. SELBY Inc.

6999 N. WATERWAY
DR. MIAMI, FL 33155
TEL. : (305) 262-0715
FAX : (305) 262-0724

THIS DRAWING IS COPYRIGHTED AND IS THE SOLE PROPERTY OF G.M. SELBY INC. IT IS PRODUCED FOR USE BY THE CITY OF KEY WEST. REPRODUCTION OR OTHER USE OF THIS DRAWING OR THE INFORMATIONS CONTAINED HEREIN WITHOUT THE WRITTEN PERMISSION OF G.M. SELBY, INC. IS PROHIBITED, ALL RIGHTS RESERVED.©2008

G.M. SELBY NO: KWC280380
DRAWN BY: F.C. DATE: 10-10-08
CHECKED BY:
ENGINEER: GERALD ZADIKOFF
LICENSE NO.: CIVIL PE# 44206 FL
SEAL:

REVISIONS

NO.	DATE	DESCRIPTION

KEY WEST BEACHES

SHEET TITLE: DOG BEACH ELEVATION

SHEET NO: C-6

BERM X-SECTION AREA: 280 S.F.

BEACH LENGTH: 240 L.F.

BERM VOLUME: 2490 C.Y.

PROPOSED BEACH ELEV.: 2'-4'

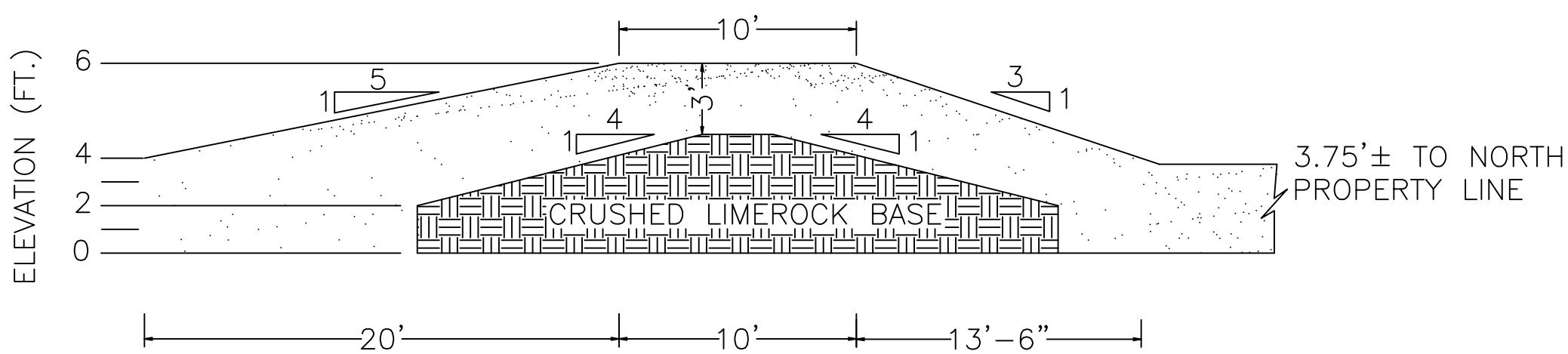

SOUTH BEACH BERM SECTION

N.T.S.

SEAL OF THE CITY OF KEY WEST, FLORIDA

G. M. SELBY Inc.

6999 N. WATERWAY
DR. MIAMI, FL 33155
TEL. : (305) 262-0715
FAX : (305) 262-0724

THIS DRAWING IS COPYRIGHTED AND IS THE SOLE PROPERTY OF G.M. SELBY INC. IT IS PRODUCED FOR USE BY THE CITY OF KEY WEST. REPRODUCTION OR OTHER USE OF THIS DRAWING OR THE INFORMATIONS CONTAINED HEREIN WITHOUT THE WRITTEN PERMISSION OF G.M. SELBY, INC. IS PROHIBITED, ALL RIGHTS RESERVED.©2008

G.M. SELBY NO: KWC280380
DRAWN BY: F.C. DATE: 10-10-08
CHECKED BY:
ENGINEER: GERALD ZADIKOFF
LICENSE NO.: CIVIL PE# 44206 FL
SEAL:

REVISIONS

NO.	DATE	DESCRIPTION

KEY WEST BEACHES

SHEET TITLE: SOUTH BEACH ELEVATION

SHEET NO: C-5