# BID DOCUMENTS

FOR THE CONSTRUCTION OF THE

# NAVY MOLE FUELING STATION AND FLOATING DOCK IMPROVEMENTS

PREPARED FOR

# CITY OF KEY WEST

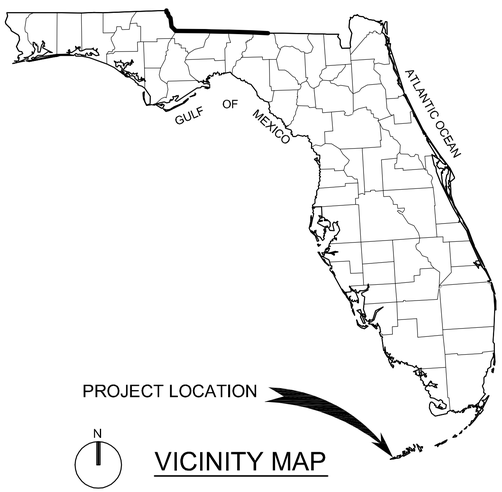


VICINITY MAP

## INDEX TO DRAWINGS


GENERAL

| | |
|---|---|
| G-001 | COVER SHEET |
| G-002 | AREA MAP AND SITE ACCESS |

SITE

| | |
|---|---|
| S-001 | GENERAL STRUCTURAL NOTES |
| S-101 | SOUTH MOLE SITE PLAN |
| S-401 | ENLARGED FUEL STATION PLAN |
| S-402 | ENLARGED ELECTRICAL PLATFORM PLAN |
| S-403 | ENLARGED FLOATING DOCK PLAN |
| S-501 | TANK AND ELECTRICAL YARD DETAILS |
| S-502 | MISCELLANEOUS DETAILS |
| S-503 | FLOATING DOCK CONNECTION DETAILS |
| S-504 | FLOATING DOCK CONNECTION DETAILS |
| S-505 | FLOATING DOCK SYSTEM - RAMP AND SINKER BLOCK DETAILS |
| S-506 | FLOATING DOCK SYSTEM - ANCHOR BLOCK DETAILS |
| S-507 | ALTERNATE No 1- NEW FLOATING DOCK CONCEPTS |

ELECTRICAL

| | |
|---|---|
| E-001 | LEGEND, ABBREVIATIONS, GENERAL NOTES |
| E-101 | SOUTH MOLE SITE PLAN |
| E-401 | ENLARGED FUEL STATION ELECTRICAL PLAN |
| E-601 | ONE LINE DIAGRAM SUBSTATION #5 |
| E-602 | SCHEDULE DETAILS AND DIAGRAM |

Volume 2 of 2
Drawings

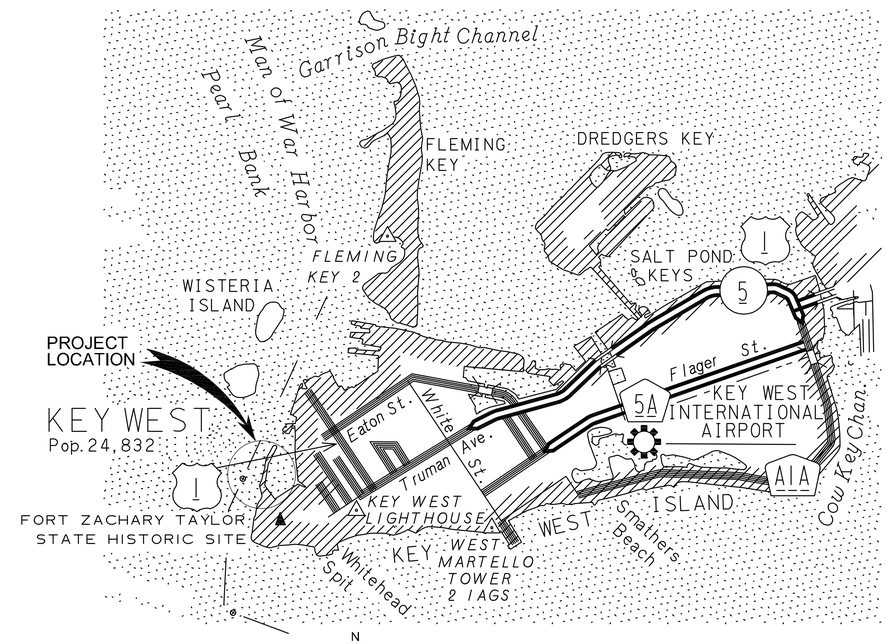


LOCATION MAP

Copyright for this map is registered by the State of Florida, Department of Transportation


For information regarding
this project, contact:

ANDREW SMYTH P.E.
6410 5th Street, Suite 2-A
Key West, FL 33040
305/294-1645


CH2MHILL

CH2M Hill Project No. 460764
Key West Project No. OM1207

FINAL DRAWINGS
JANUARY 25, 2012

1 AREA MAP AND SITE ACCESS PLAN
NTS

N

JON CASEY LONG
FL PE No. 56083

| NO. | DATE | REVISION | BY | APVD |
|---|---|---|---|---|
| | | | | |

| | | | |
|---|---|---|---|
| DSGN | JC LONG | DR | AP GIRAITIS |
| CHK | JC LONG | APVD | JC LONG |

© CH2M HILL 2012 ALL RIGHTS RESERVED.

CH2MHILL.
3001 PGA BLVD. SUITE 300
PALM BEACH GARDENS, FL 33410
EB0000072 AAC001992

NAVY MOLE FUEL STAT. / FLOATING DOCK IMPR.
KEY WEST, FLORIDA
NAVAL FACILITIES ENGINEERING COMMAND
SOUTH DIVISION - CHARLSTON, SOUTH CAROLINA

GENERAL
AREA MAP AND KEY PLAN

REUSE OF DOCUMENTS: THIS DOCUMENT, AND THE IDEAS AND DESIGNS INCORPORATED HEREIN, AS AN INSTRUMENT OF PROFESSIONAL SERVICE, IS THE PROPERTY OF CH2M HILL AND IS NOT TO BE USED, IN WHOLE OR IN PART, FOR ANY OTHER PROJECT WITHOUT THE WRITTEN AUTHORIZATION OF CH2MHILL.

VERIFY SCALE
BAR IS ONE INCH ON ORIGINAL DRAWING.
0 1"

| | |
|---|---|
| DATE | JANUARY 25, 2012 |
| PROJ | 460764 |
| DWG | G-002 |
| SHEET | 2 OF 19 |

FINAL DRAWINGS

# NOTES

G-1 THE SITE DRAWINGS ARE PART OF THE CONTRACT DOCUMENTS AND DO NOT BY THEMSELVES PROVIDE ALL THE INFORMATION REQUIRED TO PROPERLY COMPLETE THE PROJECT STRUCTURE. THE GENERAL CONTRACTOR SHALL CONSULT THE GENERAL AND ELECTRICAL DRAWINGS AND COORDINATE THE INFORMATION CONTAINED IN THESE DRAWINGS WITH THE SITE DRAWINGS TO PROPERLY CONSTRUCT THE PROJECT.

G-2 DIMENSIONS: ALL DIMENSIONS AND ELEVATIONS SHOWN ON THE SITE DRAWINGS MUST BE VERIFIED AND COORDINATED WITH THE OTHER DISCIPLINE DRAWINGS BY THE CONTRACTOR BEFORE PROCEEDING WITH THE CONSTRUCTION. DISCREPANCIES SHALL BE BROUGHT TO THE ATTENTION OF THE ENGINEER BEFORE PROCEEDING WITH THE WORK.

# STRUCTURAL DESIGN CRITERIA & CODES

D-1 THIS STRUCTURE HAS BEEN DESIGNED IN ACCORDANCE WITH THE 2010 FLORIDA BUILDING CODE

D-2 CONCRETE SLAB IS DESIGNED FOR THE WEIGHT OF A FULL 1000 GALLON FUEL TANK AT 14,000 LBS AND SURROUNDING IS DESIGNED TO A 250 PSF UNIFORM SURFACE LOAD

SEE SHEET S-401 FOR ADDITIONAL EQUIPMENT LOADS

D-3 WIND LOADS FOR OVERTURNING ON TANK ARE AND SHALL BE BASED ON ASCE 7-10, MINIMUM DESIGN LOAD FOR BUILDING AND OTHER STRUCTURES.

D-4 WIND DESIGN CRITERIA:

ULTIMATE DESIGN WIND SPEED: 200 MPH (3 SEC GUST)
EXPOSURE CATEGORY : C
RISK CATEGORY: III

# SOILS AND FOUNDATIONS

F-1 FOOTINGS AND SLAB HAVE BEEN DESIGNED AND PROPORTIONED FOR A MAX. ALLOWABLE SOIL BEARING PRESSURE OF 1,500 POUNDS PER SQUARE FOOT .

F-2 SOILS SHALL BE PREPARED FOR FOUNDATIONS AND SLABS AS DESCRIBED IN THE SPECIFICATIONS. .

F-3 FOUNDATIONS AND FOOTINGS SHALL BE LOCATED AT THE CENTERLINE OF THE WALL OR COLUMN ABOVE, UNLESS NOTED OTHERWISE.

F-4 SITE PREPARATION SHALL BE IN ACCORDANCE WITH SPECIFICATIONS.

# STRUCTURAL STEEL

S-1 FABRICATION AND ERECTION OF STRUCTURAL STEEL SHALL CONFORM TO THE A.I.S.C. "MANUAL OF STEEL CONSTRUCTION", THIRTEENTH EDITION AND THE AISC "SPECIFICATION FOR STRUCTURAL STEEL BUILDINGS", 2005.

S-2 STRUCTURAL STEEL W-SHAPE SECTIONS SHALL CONFORM TO THE REQUIREMENTS OF ASTM A-992, GRADE 50. CHANNELS, ANGLES, PLATES AND BARS SHALL CONFORM TO THE REQUIREMENTS OF ASTM A-36, WITH A MINIMUM YIELD STRESS OF 36 KSI.

S-3 SQUARE AND RECTANGULAR HSS SHAPES SHALL CONFORM TO ASTM A-500, GRADE B WITH A MINIMUM YIELD STRESS OF 46 KSI.

S-4 UNLESS OTHERWISE NOTED BOLTS SHALL BE $\frac{3}{4}$"Ø A-325-X AND SHALL BE USED IN BEARING-TYPE CONNECTIONS. ALL HIGH STRENGTH BOLTS SHALL MEET THE REQUIREMENTS OF THE "SPECIFICATIONS FOR STRUCTURAL JOINTS USING ASTM A-325 OR A-490 BOLTS

S-5 SHOP AND FIELD WELDING SHALL BE PERFORMED BY CURRENTLY CERTIFIED WELDERS IN ACCORDANCE WITH THE AWS "STRUCTURAL WELDING CODE", LATEST EDITION. ALL CONNECTIONS SHALL USE E70XX ELECTRODES.

S-6 SUBMIT STRUCTURAL STEEL AND MISC. FABRICATIONS SHOP AND ERECTION DRAWINGS FOR REVIEW BY THE ENGINEER. ANY SPLICES OR CONNECTIONS NOT FULLY PROVIDED IN THESE PLANS SHALL BE DESIGNED BY AN ENGINEER WHO OVERSEES THE DETAILING OF THE STEEL SHOP AND ERECTION DRAWINGS, AND BEAR THE SEAL OF THAT INDIVIDUAL, BEING A PROFESSIONAL ENGINEER LICENSED IN THE STATE OF FLORIDA. PROVIDE SIGNED AND SEALED ENGINEERING CALCULATIONS FOR ANY SPECIAL MOMENT SPLICE DESIGNS.

S-7 ALL MISCELLANEOUS BOLTS, NUTS AND WASHERS, AND SHAPES SHALL BE HOT-DIPPED GALVANIZED (AS INDICATED) IN CONFORMANCE WITH ASTM A-153 (U.N.O.).

# REINFORCED CONCRETE

RC-1 CONCRETE DESIGN AND PLACEMENT SHALL BE IN STRICT ACCORDANCE WITH ACI 318-05, "BUILDING CODE REQUIREMENTS FOR REINFORCED CONCRETE".

RC-2 STRUCTURAL CONCRETE SHALL CONFORM TO ACI 301 SPECIFICATIONS, AND SHALL DEVELOP THE FOLLOWING MINIMUM COMPRESSIVE STRENGTHS AT 28 DAYS, AS WELL AS OTHER PROPERTIES SPECIFIED IN THESE DOCUMENTS. SEE SPECIFICATIONS FOR DESIGN MIX REQUIREMENTS.

RC-3 CONCRETE SHALL BE READY-MIX, REGULAR WEIGHT FOR ALL STRUCTURAL USES, WITH MINIMUM DRY DENSITY OF 140 LBS. PER CUBIC FOOT.

RC-4 3/4" CHAMFER ALL EXPOSED CONCRETE EDGES UNLESS NOTED OTHERWISE.

RC-5 REINFORCING STEEL SHALL BE DETAILED, FABRICATED AND INSTALLED IN ACCORDANCE WITH ACI 318-05 AND ACI DETAILING MANUAL, ACI 315.

RC-6 REINFORCING STEEL SHALL BE NEW, DEFORMED BARS, FREE OF RUST, SCALE AND OIL, CONFORMING TO ASTM A-615, GRADE 60 WITH A MINIMUM YIELD STRENGTH = 60,000 PSI.

RC-7 PROVIDE CONTINUOUS REINFORCEMENT WITH ACI CLASS "B" LAP SPLICES, OR AS NOTED OTHERWISE. IN BEAMS, LAP CONTINUOUS BOTTOM STEEL OVER SUPPORTS AND CONTINUOUS TOP STEEL AT MIDSPAN, UNLESS NOTED OTHERWISE.

RC-8 WELDED WIRE FABRIC REINFORCING SHALL CONFORM TO ASTM A-185. PROVIDE MINIMUM 6 INCH LAPS, TYPICAL. PROVIDE ADEQUATE SUPPORTS AND BOLSTERING TO PRESERVE THE SPECIFIED POSITION OF THE MESH DURING CONCRETE PLACEMENT AND FINISHING. FLAT SHEETS ONLY. ROLLS WILL NOT BE PERMITTED.

RC-9 TERMINATE ALL DISCONTINUOUS ENDS OF TOP BARS WITH STANDARD ACI HOOKS. TURN HOOKS UP OR DOWN INTO SUPPORTING STRUCTURE. CORNER BARS SHALL BE SUPPLIED AND PLACED IN ADDITION TO HOOKED ENDS, PER THE DETAILS IN THESE DOCUMENTS.

RC-10 PROVIDE THE FOLLOWING MINIMUM CONCRETE COVERAGE OVER REINFORCING UNLESS NOTED OTHERWISE:

FOOTINGS, BOTTOM AND SIDES: 3"
FOOTINGS, TOP: 2"
SLABS ON GRADE, BOTTOM: 3"
SLABS ON GRADE, TOP: 1-1/2"

RC-11 PENETRATIONS THROUGH SLABS, BEAMS OR FOOTINGS SHALL BE SLEEVED INDIVIDUALLY. CORE DRILLING OF EXISTING CONCRETE MEMBERS WILL NOT BE PERMITTED, UNLESS NOTED ON PLANS. SUBMIT LOCATIONS AND SIZES OF ALL SLEEVES FOR ENGINEER OF RECORD APPROVAL PRIOR TO CASTING.

RC-12 NO REINFORCING BARS SHALL BE CUT OR OTHERWISE MODIFIED IN THE FIELD. REINFORCING BARS SHALL NOT BE DISPLACED PRIOR TO OR DURING CASTING TO ACCOMMODATE ANCHORS, EMBEDS OR OTHER ITEMS.

RC-13 WHERE FOOTINGS CHANGE DIRECTION, PROVIDE CORNER BARS OF SAME SIZE AND QUANTITY AS THE SPECIFIED LONGITUDINAL STEEL.

RC-14 EMBEDDED ITEMS SHALL BE SECURELY FIXED AND MAINTAINED IN POSITION PRIOR TO AND DURING CONCRETE PLACEMENT.

RC-15 PROVIDE REINFORCING SPLICES AS INDICATED BELOW IN CONFORMANCE WITH AN ACI CLASS B TENSION SPLICE. (2005 ACI 318 CODE). NO REDUCTION SHALL BE PERMITTED DUE TO BAR SPACING

CLASS B SPLICES FOR REINFORCEMENT, OTHER THAN TOP BARS

| BAR SIZE | 3,000 PSI | 4,000 PSI | 5,000 PSI |
|---|---|---|---|
| #3 | 16" | 16" | 16" |
| #4 | 22" | 19" | 19" |
| #5 | 27" | 23" | 23" |
| #6 | 35" | 31" | 31" |
| #7 | 48" | 42" | 42" |
| #8 | 63" | 55" | 55" |
| #9 | 80" | 69" | 69" |
| #10 | 102" | 88" | 88" |
| #11 | 125" | 108" | 108" |

CLASS B SPLICES FOR "PLAIN REINFORCEMENT AS TOP BARS

| BAR SIZE | 3,000 PSI | 4,000 PSI | 5,000 PSI |
|---|---|---|---|
| #3 | 21" | 18" | 18" |
| #4 | 28" | 24" | 24" |
| #5 | 35" | 30" | 30" |
| #6 | 46" | 40" | 40" |
| #7 | 63" | 54" | 54" |
| #8 | 82" | 71" | 71" |
| #9 | 104" | 90" | 90" |
| #10 | 132" | 114" | 114" |
| #11 | 162" | 140" | 140" |

JON CASEY LONG
FL PE No. 56083

| NO. | DATE | REVISION | BY | APVD |
|---|---|---|---|---|

DSGN L VAN DYK / A ARTHAY | DR AP GIRAITIS | CHK JC LONG | APVD JC LONG

CH2MHILL®
3001 PGA BLVD. SUITE 300
PALM BEACH GARDENS, FL 33410
EB0000072 · AAC001992

NAVY MOLE FUEL STAT. / FLOATING DOCK IMPR.
KEY WEST, FLORIDA
NAVAL FACILITIES ENGINEERING COMMAND
SOUTH DIVISION - CHARLSTON, SOUTH CAROLINA

STRUCTURAL
GENERAL STUCTURAL NOTES

REUSE OF DOCUMENTS: THIS DOCUMENT, AND THE IDEAS AND DESIGNS INCORPORATED HEREIN, AS AN INSTRUMENT OF PROFESSIONAL SERVICE, IS THE PROPERTY OF CH2M HILL AND IS NOT TO BE USED, IN WHOLE OR IN PART, FOR ANY OTHER PROJECT WITHOUT THE WRITTEN AUTHORIZATION OF CH2MHILL.
©CH2M HILL 2012. ALL RIGHTS RESERVED.

VERIFY SCALE
BAR IS ONE INCH ON ORIGINAL DRAWING.
0 1"

| | |
|---|---|
| DATE | JANUARY 25, 2012 |
| PROJ | 460764 |
| DWG | S-001 |
| SHEET | 3 OF 19 |

FINAL DRAWINGS

FORT ZACHARY TAYLOR

GULF OF MEXICO

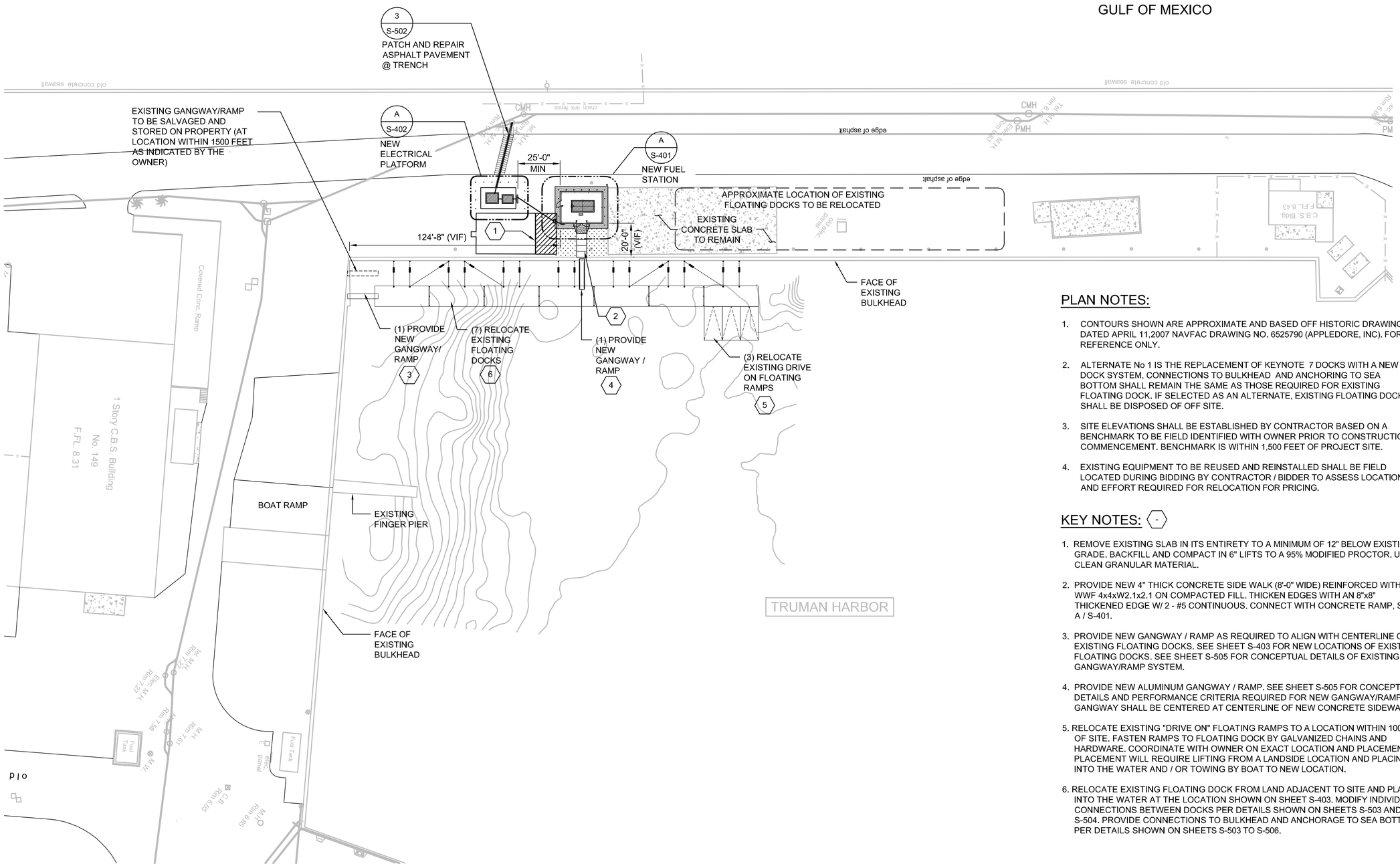


## PLAN NOTES:

1. CONTOURS SHOWN ARE APPROXIMATE AND BASED OFF HISTORIC DRAWING DATED APRIL 11,2007 NAVFAC DRAWING NO. 6525790 (APPLEDORE, INC). FOR REFERENCE ONLY.
2. ALTERNATE No 1 IS THE REPLACEMENT OF KEYNOTE 7 DOCKS WITH A NEW DOCK SYSTEM, CONNECTIONS TO BULKHEAD AND ANCHORING TO SEA BOTTOM SHALL REMAIN THE SAME AS THOSE REQUIRED FOR EXISTING FLOATING DOCK. IF SELECTED AS AN ALTERNATE, EXISTING FLOATING DOCK SHALL BE DISPOSED OF OFF SITE.
3. SITE ELEVATIONS SHALL BE ESTABLISHED BY CONTRACTOR BASED ON A BENCHMARK TO BE FIELD IDENTIFIED WITH OWNER PRIOR TO CONSTRUCTION COMMENCEMENT. BENCHMARK IS WITHIN 1,500 FEET OF PROJECT SITE.
4. EXISTING EQUIPMENT TO BE REUSED AND REINSTALLED SHALL BE FIELD LOCATED DURING BIDDING BY CONTRACTOR / BIDDER TO ASSESS LOCATION AND EFFORT REQUIRED FOR RELOCATION FOR PRICING.

## KEY NOTES: (-)

1. REMOVE EXISTING SLAB IN ITS ENTIRETY TO A MINIMUM OF 12" BELOW EXISTING GRADE. BACKFILL AND COMPACT IN 6" LIFTS TO A 95% MODIFIED PROCTOR. USE CLEAN GRANULAR MATERIAL.
2. PROVIDE NEW 4" THICK CONCRETE SIDE WALK (8'-0" WIDE) REINFORCED WITH WWF 4x4xW2.1x2.1 ON COMPACTED FILL. THICKEN EDGES WITH AN 8"x8" THICKENED EDGE W/ 2 - #5 CONTINUOUS. CONNECT WITH CONCRETE RAMP, SEE A / S-401.
3. PROVIDE NEW GANGWAY / RAMP AS REQUIRED TO ALIGN WITH CENTERLINE OF EXISTING FLOATING DOCKS. SEE SHEET S-403 FOR NEW LOCATIONS OF EXISTING FLOATING DOCKS. SEE SHEET S-505 FOR CONCEPTUAL DETAILS OF EXISTING GANGWAY/RAMP SYSTEM.
4. PROVIDE NEW ALUMINUM GANGWAY / RAMP. SEE SHEET S-505 FOR CONCEPTUAL DETAILS AND PERFORMANCE CRITERIA REQUIRED FOR NEW GANGWAY/RAMP. GANGWAY SHALL BE CENTERED AT CENTERLINE OF NEW CONCRETE SIDEWALK.
5. RELOCATE EXISTING "DRIVE ON" FLOATING RAMPS TO A LOCATION WITHIN 1000 -FT OF SITE. FASTEN RAMPS TO FLOATING DOCK BY GALVANIZED CHAINS AND HARDWARE. COORDINATE WITH OWNER ON EXACT LOCATION AND PLACEMENT. PLACEMENT WILL REQUIRE LIFTING FROM A LANDSIDE LOCATION AND PLACING INTO THE WATER AND / OR TOWING BY BOAT TO NEW LOCATION.
6. RELOCATE EXISTING FLOATING DOCK FROM LAND ADJACENT TO SITE AND PLACE INTO THE WATER AT THE LOCATION SHOWN ON SHEET S-403. MODIFY INDIVIDUAL CONNECTIONS BETWEEN DOCKS PER DETAILS SHOWN ON SHEETS S-503 AND S-504. PROVIDE CONNECTIONS TO BULKHEAD AND ANCHORAGE TO SEA BOTTOM PER DETAILS SHOWN ON SHEETS S-503 TO S-506.

1 LOCATION SITE PLAN
1" = 30'

0 30 60 90
1" = 30'

| NO. | DATE | REVISION | BY | APVD |
|---|---|---|---|---|
| | | | | |

DSGN L VAN DYK / DR A ARTHAY | CHK AP GIRAITIS | APVD JC LONG | BY JC LONG | APVD JON CASEY LONG FL PE No. 56083

©CH2M HILL 2012. ALL RIGHTS RESERVED.

CH2MHILL®
3001 PGA BLVD. SUITE 300
PALM BEACH GARDENS, FL 33410
EB0000072 AAC001992

NAVY MOLE FUEL STAT. / FLOATING DOCK IMPR.
KEY WEST, FLORIDA
NAVAL FACILITIES ENGINEERING COMMAND
SOUTH DIVISION - CHARLSTON, SOUTH CAROLINA

SITE
SOUTH MOLE SITE PLAN

REUSE OF DOCUMENTS: THIS DOCUMENT, AND THE IDEAS AND DESIGNS INCORPORATED HEREIN, AS AN INSTRUMENT OF PROFESSIONAL SERVICE, IS THE PROPERTY OF CH2M HILL AND IS NOT TO BE USED, IN WHOLE OR IN PART, FOR ANY OTHER PROJECT WITHOUT THE WRITTEN AUTHORIZATION OF CH2M HILL.

VERIFY SCALE
BAR IS ONE INCH ON ORIGINAL DRAWING
0 1"

| | |
|---|---|
| DATE | JANUARY 25, 2012 |
| PROJ | 460764 |
| DWG | S -101 |
| SHEET | 4 OF 19 |

FINAL DRAWINGS

FILENAME: S-101_460764.dwg PLOT DATE: Jan31, 2013 PLOT TIME: 7:23pm

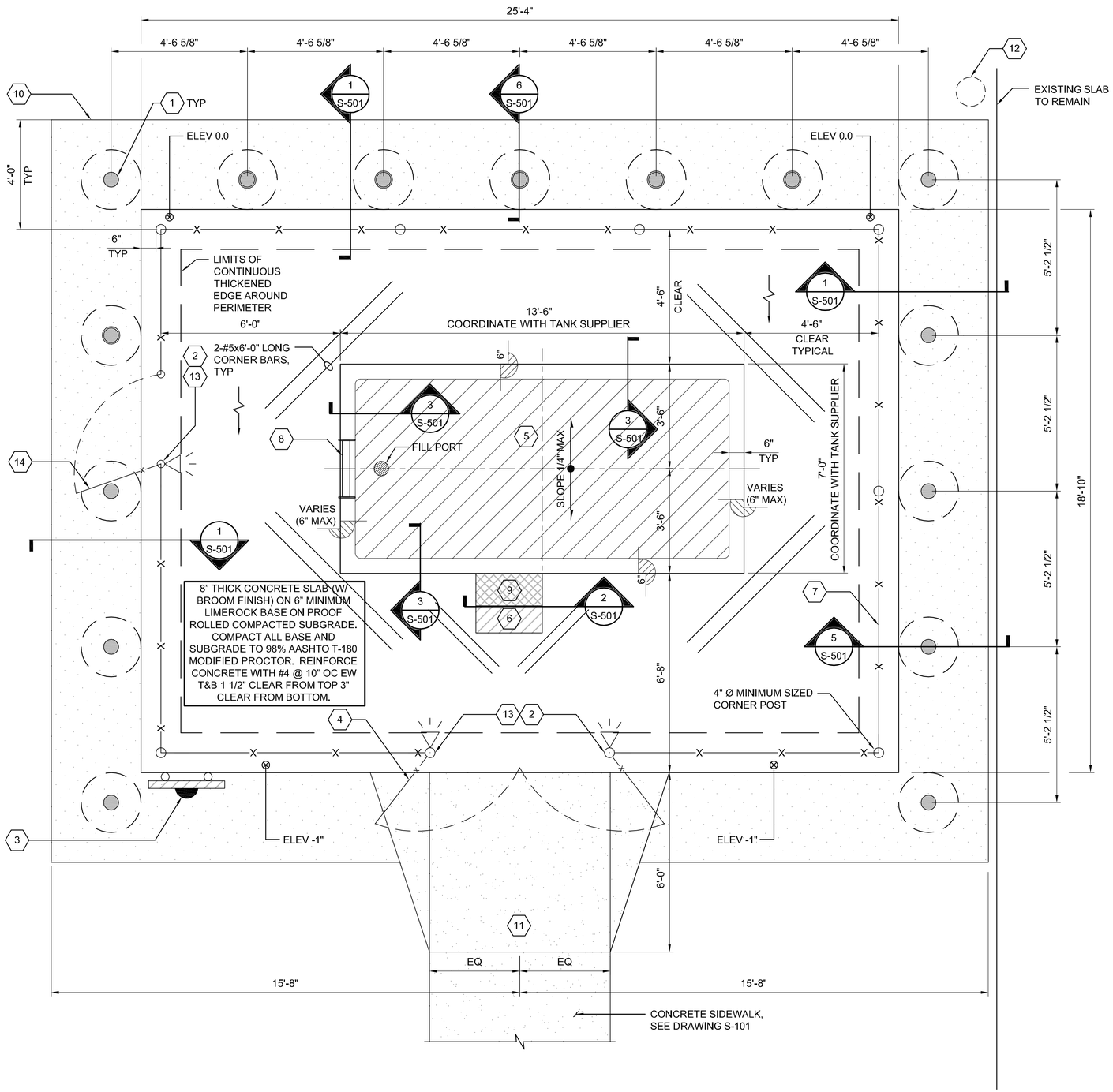


## A ENLARGED FUEL STATION PLAN

1/2" = 1'-0"

## KEY NOTES:

1. 6" Ø x 4'-0" HIGH HOT-DIPPED GALVANIZED STEEL BOLLARD FILLED WITH CONCRETE AND PAINTED YELLOW. SEE DETAIL 5/S501.
2. EXTEND FENCE POST AT GATE WHERE SHOWN TO TOP OF POST ELEVATION OF 9'-0" A.F.G.
3. EMERGENCY CONTROL BOX FOR FUEL STATION. SEE E-SHEETS.
4. 8'-0" WIDE DOUBLE SWING GATE WITH CANE RODS AND 180° SWINGING HINGES. PROVIDE HITCH LATCH WITH LOCK.
5. 1000 GALLON FUEL STORAGE TANK ON AN ELEVATED CONCRETE SLAB (6" MIN.). SEE DETAIL 3/S501.
6. FUEL DISPENSING HOSE REEL (SPRING RETRIEVAL) WITH 100 FEET OF HOSE AND DISPENSING NOZZLE. MOUNT HOSE REEL ON ELEVATED CONCRETE SLAB (6") . PLACE REEL BELOW METER ENCLOSURE. SEE 2 / S501.
7. 7'-0" HIGH CHAIN LINK FENCE WITH 1 FOOT HIGH OUTRIGGERS @ 45° WITH 3 STRANDS OF BARBED WIRE MOUNTED THROUGH CONCRETE SLAB. FENCE SYSTEM SHALL HAVE A BLACK VINYL COATING AND BLACK VINYL PRIVACY SLATS. SEE 1 / S501 AND 1/S502.
8. ACCESS LADDER SYSTEM WITH STAINLESS STEEL ELEVATED DECK STEP AT BASE.
9. SIDE MOUNTED STAINLESS STEEL METER ENCLOSURE. CONNECT TO SIDE OF TANK. PROVIDE ROLL DOWN DOOR (LOCKABLE) AND ENCLOSE MAIN PUMP ON/OFF SWITCH AND METER ASSEMBLY.
10. BACKFILL A MINIMUM 3'-0" WIDE AREA WITH 6" MIN LIMEROCK BASE (LBR=100) COMPACT TO 98% MODIFIED PROCTOR.
11. CONSTRUCT A 8'-0" CONCRETE ACCESS RAMP FROM EXISTING GRADE TO FINISH SLAB ELEVATION. REINFORCE WITH WWF 4x4 x W2.1xW2.1, 1 1/2" CLEAR FROM TOP. PROVIDE 8"x8" THICKENED EDGE REINFORCED WITH (2) #5 CONTINUOUS. SAWCUT JOINTS AT 5'-0" OC.
12. AREA LIGHTING ATTACHED TO EXISTING POLE @ 30'-0" A.F.G. SEE E-SHEETS FOR MORE DETAIL.
13. NEW FLOOD LIGHTS MOUNTED TO GATE/FENCE POST @ ELEVATION 9'-0" A.F.G.
14. 3'-0" WIDE SINGLE SWING GATE WITH CANE ROD AND 180 DEGREE SWINGING HINGES. PROVIDE HITCH LATCH WITH LOCK.

## PLAN NOTE:

1. ELEVATION SHALL BE EQUIVALENT TO 4 INCHES ABOVE EXISTING ADJACENT ROAD EDGE ELEVATION.
2. ALL SLABS ON GRADE SHALL RECEIVE A BROOM FINISH (U.N.O.).

0 N 1/2" = 1'-0"

| NO. | DATE | REVISION | BY | APVD |
|---|---|---|---|---|

DSGN L VAN DYK | DR AP GIRAITIS | CHK JC LONG | APVD JC LONG | BY JC LONG

JON CASEY LONG
FL PE No. 56083

©CH2M HILL 2012. ALL RIGHTS RESERVED.

CH2MHILL®
3001 PGA BLVD. SUITE 300
PALM BEACH GARDENS, FL 33410
EB0000072 · AAC001992

NAVY MOLE FUEL STAT. / FLOATING DOCK IMPR.
KEY WEST, FLORIDA
NAVAL FACILITIES ENGINEERING COMMAND
SOUTH DIVISION - CHARLSTON, SOUTH CAROLINA

SITE
ENLARGED FUEL STATION PLAN

REUSE OF DOCUMENTS: THIS DOCUMENT, AND THE IDEAS AND DESIGNS INCORPORATED HEREIN, AS AN INSTRUMENT OF PROFESSIONAL SERVICE, IS THE PROPERTY OF CH2M HILL AND IS NOT TO BE USED, IN WHOLE OR IN PART, FOR ANY OTHER PROJECT WITHOUT THE WRITTEN AUTHORIZATION OF CH2MHILL.

VERIFY SCALE
BAR IS ONE INCH ON ORIGINAL DRAWING.
0 1"

| | |
|---|---|
| DATE | JANUARY 25, 2012 |
| PROJ | 460764 |
| DWG | S-401 |
| SHEET | 5 OF 19 |

FINAL DRAWINGS

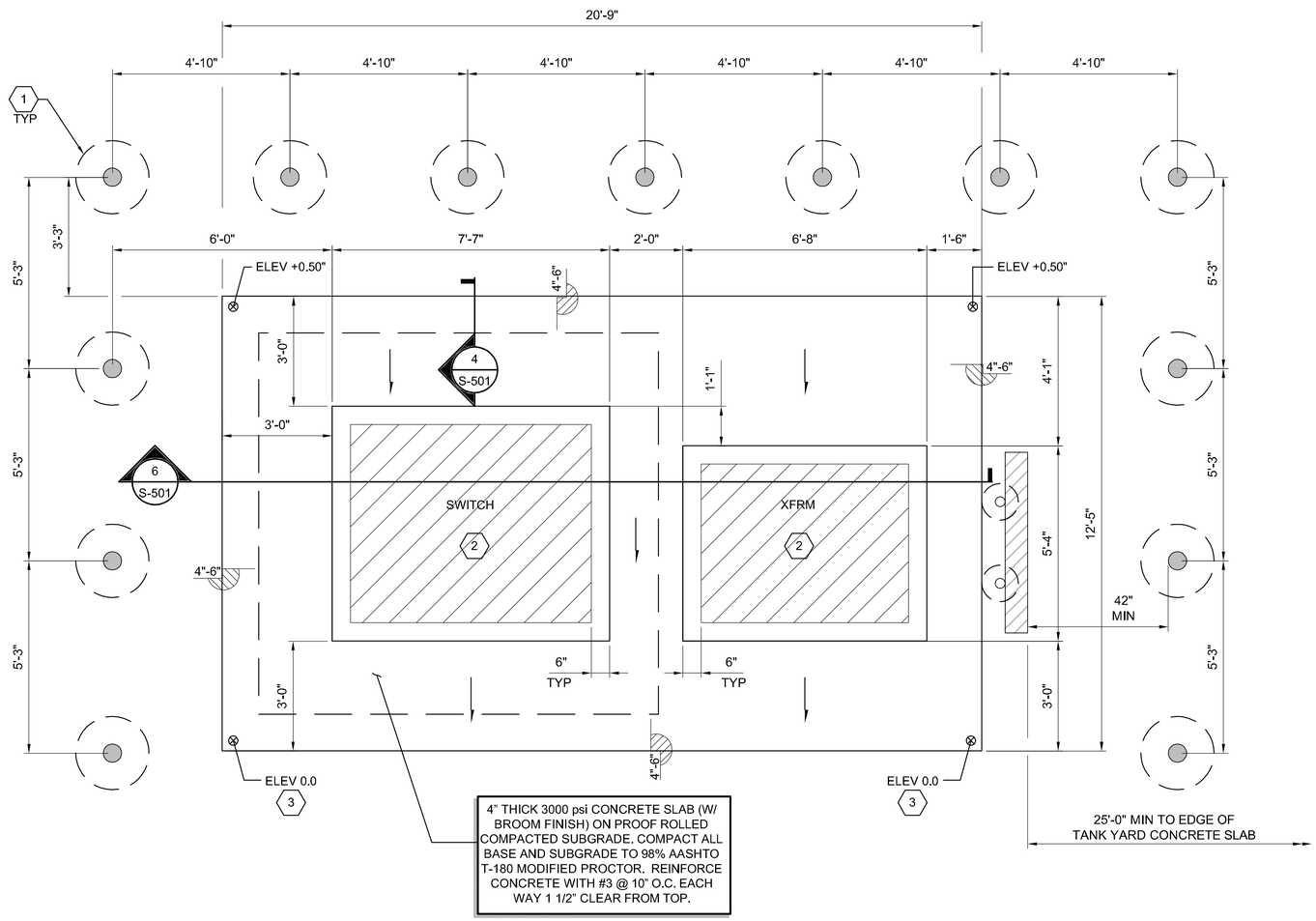


## A ENLARGED ELECTRICAL PLATFORM PLAN

1/2" = 1'-0"

## KEY NOTES: (-)

1. 6" Ø x 4'-0" HIGH HOT DIPPED GALVANIZED STEEL BOLLARD FILLED WITH CONCRETE AND PAINTED YELLOW. SEE DETAIL 5/S501.
2. ELECTRICAL EQUIPMENT-SEE E-SHEETS.
3. REFERENCE ELEVATION 0.0 SHALL BE 4 INCHES ABOVE NEAREST EDGE OF ASPHALT ROAD.

N

0 1/2" = 1'-0"

JON CASEY LONG
FL PE No. 56083

| NO. | DATE | REVISION | BY | APVD |
|---|---|---|---|---|

DSGN L VAN DYK | DR AP GIRAITIS | CHK JC LONG | APVD JC LONG | BY JC LONG | APVD

©CH2M HILL 2012. ALL RIGHTS RESERVED.

CH2MHILL®
3001 PGA BLVD. SUITE 300
PALM BEACH GARDENS, FL 33410
EB0000072 · AAC001992

NAVY MOLE FUEL STAT. / FLOATING DOCK IMPR.
KEY WEST, FLORIDA
NAVAL FACILITIES ENGINEERING COMMAND
SOUTH DIVISION - CHARLSTON, SOUTH CAROLINA

SITE

# ENLARGED ELECTRICAL PLATFORM PLAN

REUSE OF DOCUMENTS: THIS DOCUMENT, AND THE IDEAS AND DESIGNS INCORPORATED HEREIN, AS AN INSTRUMENT OF PROFESSIONAL SERVICE, IS THE PROPERTY OF CH2M HILL AND IS NOT TO BE USED, IN WHOLE OR IN PART, FOR ANY OTHER PROJECT WITHOUT THE WRITTEN AUTHORIZATION OF CH2MHILL.

VERIFY SCALE
BAR IS ONE INCH ON ORIGINAL DRAWING.
0 1"

| | |
|---|---|
| DATE | JANUARY 25, 2012 |
| PROJ | 460764 |
| DWG | S-402 |
| SHEET | 6 OF 19 |

FINAL DRAWINGS

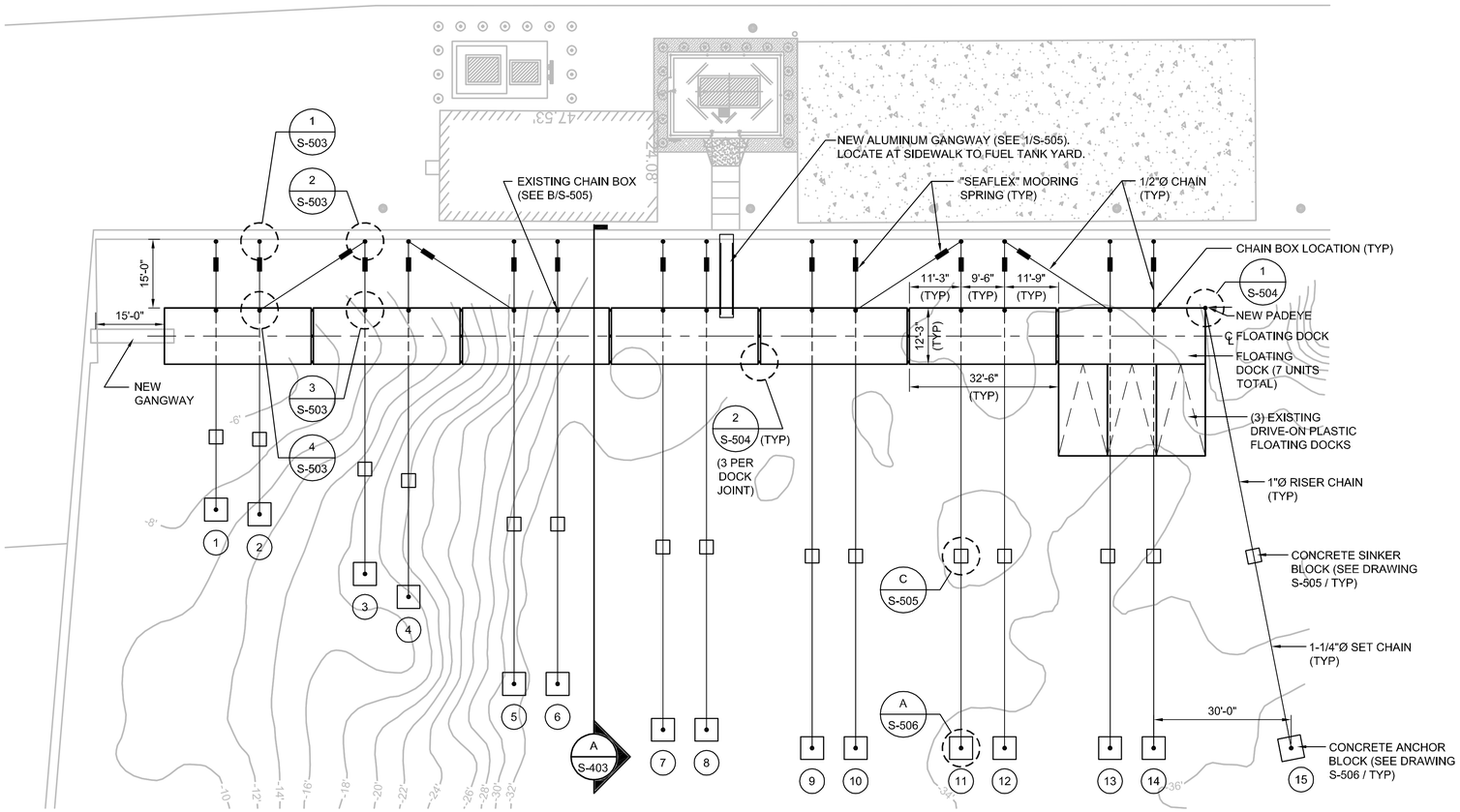


## FLOATING DOCK - ANCHORAGE PLAN

1/16" = 1'-0"

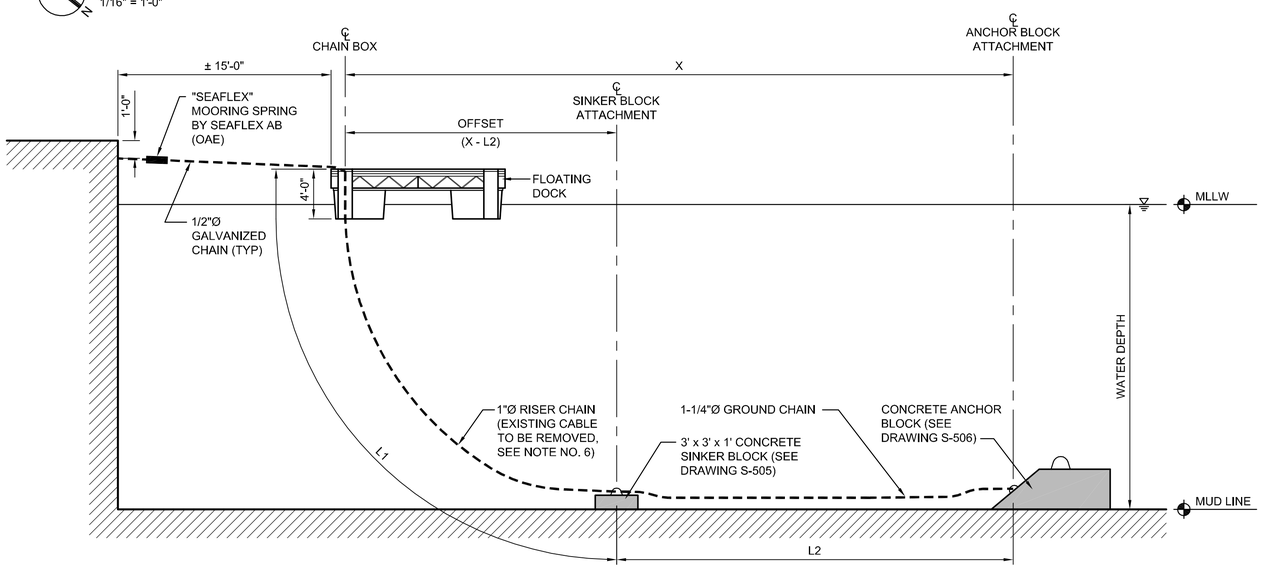


## A CROSS SECTION - SCHEMATIC

NTS

## ANCHOR AND CHAIN SUMMARY

| ANCHOR NO. | WATER DEPTH AT ANCHOR (FT) | OFFSET DISTANCE ℄ ANCHOR TO ℄ FLOAT CONNECTION, X (FT) | LENGTH OF 1"Ø RISER CHAIN L1 (FT) | LENGTH OF 1-1/4"Ø GROUND CHAIN L2 (FT) | OFFSET X - L2 (FT) |
|---|---|---|---|---|---|
| 1 | 9 | 44 | 22 | 31 | 13 |
| 2 | 11 | 48 | 26 | 32 | 17 |
| 3 | 17 | 61 | 38 | 33 | 28 |
| 4 | 18 | 63 | 40 | 34 | 29 |
| 5 | 31 | 90 | 66 | 38 | 52 |
| 6 | 32 | 92 | 68 | 38 | 54 |
| 7 | 32 | 92 | 68 | 38 | 54 |
| 8 | 32 | 92 | 68 | 38 | 54 |
| 9 | 32 | 92 | 68 | 38 | 54 |
| 10 | 32 | 92 | 68 | 38 | 54 |
| 11 | 34 | 96 | 72 | 39 | 58 |
| 12 | 34 | 96 | 72 | 39 | 58 |
| 13 | 35 | 98 | 74 | 39 | 59 |
| 14 | 35 | 98 | 74 | 39 | 59 |
| 15 | 36 | 100 | 76 | 40 | 61 |

## NOTES

1. ANCHOR BLOCK, SINKER BLOCK, AND CHAIN LENGTHS SHOWN IN THE ANCHOR AND CHAIN SUMMARY TABLE ARE BASED ON THE CORRESPONDING WATER DEPTHS WITH A 2'-0" TIDE RANGE. ACTUAL WATER DEPTHS MAY VARY, COMPLETE DEPTH CHART IS INCLUDED IN SPECS.. CONTRACTOR SHALL OBTAIN BATHYMETRIC SURVEY OF AREA TO CONFIRM GRADES. SUBMIT SURVEY RESULTS TO ENGINEER FOR REVIEW AND APPROVAL. LENGTH OF CHAINS AND LOCATIONS OF SINKER BLOCKS MAY BE SUBJECT TO CHANGE BASED ON RESULTS OF SURVEY.
2. RISER CHAIN LENGTH L1 INCLUDES AN ADDITIONAL 4 FEET OF 1"Ø RISER CHAIN TO ACCOUNT FOR DEPTH OF CHAIN BOX.
3. CONTRACTOR SHALL INCLUDE AN ADDITIONAL 5 FEET (MIN) OF 1"Ø RISER CHAIN LENGTH FOR INSTALLATION ADJUSTMENTS.
4. CHAIN LENGTHS SHALL BE FIELD ADJUSTED (TO PROVIDE EQUAL TENSION AT EACH FLOAT UNIT), UNDER CALM, SLACK WATER CONDITIONS NEAR TIME OF HIGH TIDE TO THE TOTAL LENGTH REQUIRED FOR THE ACTUAL WATER DEPTH AND ANCHOR BLOCK LOCATION. CHAINS SHALL BE INITIALLY PRETENSIONED TO APPROXIMATELY 680 LBS. AND THEN SYSTEMATICALLY ADJUSTED UNTIL THE FLOATING DOCK SYSTEM REMAINS AT REST IN A STRAIGHT LINE AND IN THE PROPER ALIGNMENT. THE SINKER BLOCKS SHOULD REST ON THE HARBOR BOTTOM WITHOUT EXCESS RISER CHAIN ON THE BOTTOM.
5. EXISTING FLOATING DOCK CONNECTIONS BETWEEN EACH FLOAT SHALL BE UPGRADED PER THE DETAILS SHOWN ON S-503 AND S-504.

| NO. | DATE | REVISION | BY | APVD |
|---|---|---|---|---|
| | | | | |

DSGN A ARTHAY | DR AJ VANHOOSER | CHK JC LONG | APVD JC LONG | BY JC LONG | APVD ANTONIO ARTHAY FL PE No. 57912

©CH2M HILL 2012. ALL RIGHTS RESERVED.

CH2MHILL®
3001 PGA BLVD. SUITE 300
PALM BEACH GARDENS, FL 33410
EB0000072 · AAC001992

NAVY MOLE FUEL STAT. / FLOATING DOCK IMPR.
KEY WEST, FLORIDA
NAVAL FACILITIES ENGINEERING COMMAND
SOUTH DIVISION - CHARLSTON, SOUTH CAROLINA

REUSE OF DOCUMENTS: THIS DOCUMENT, AND THE IDEAS AND DESIGNS INCORPORATED HEREIN, AS AN INSTRUMENT OF PROFESSIONAL SERVICE, IS THE PROPERTY OF CH2M HILL AND IS NOT TO BE USED, IN WHOLE OR IN PART, FOR ANY OTHER PROJECT WITHOUT THE WRITTEN AUTHORIZATION OF CH2M HILL.

SITE
ENLARGED FLOATING DOCK PLAN

VERIFY SCALE
BAR IS ONE INCH ON ORIGINAL DRAWING.
0 1"

| | |
|---|---|
| DATE | JANUARY 25, 2012 |
| PROJ | 460764 |
| DWG | S-403 |
| SHEET | 7 OF 19 |

FINAL DRAWINGS

0 8' 16' 24' 32'
0 1" 2" 3"
3/32" = 1'-0"

FILENAME: S-403_460764.dwg PLOT DATE: Jan31, 2013 PLOT TIME: 7:33pm

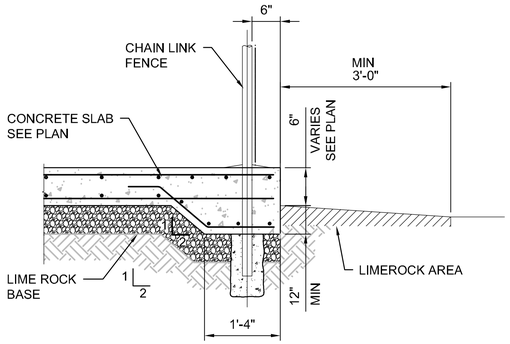


1 SECTION
3/4" = 1'-0"

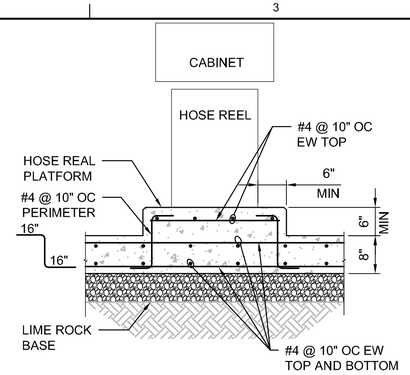


2 SECTION
3/4" = 1'-0"

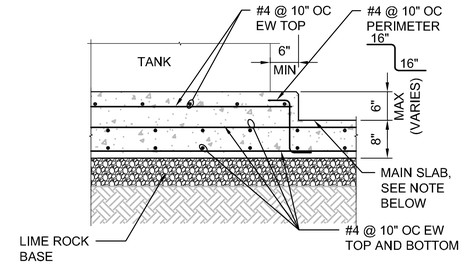


NOTE:
1. MAIN SLAB WILL BE SLOPING. MAINTAIN ELEVATED SLAB FLAT AND SLOPE MAIN SLAB WITH A 6" MAXIMUM STEP ON WATERSIDE.
2. TANK TO BE FASTENED TO SLAB WITH STAINLESS STEEL EXPANSION BOLTS OR AS SPECIFIED BY MANUFACTURER.

3 SECTION
3/4" = 1'-0"

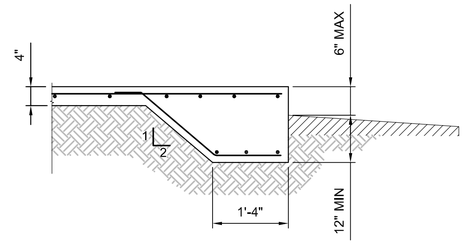


4 SECTION
3/4" = 1'-0"

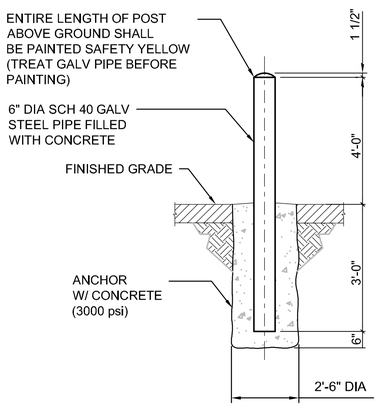


5 SECTION
3/4" = 1'-0"

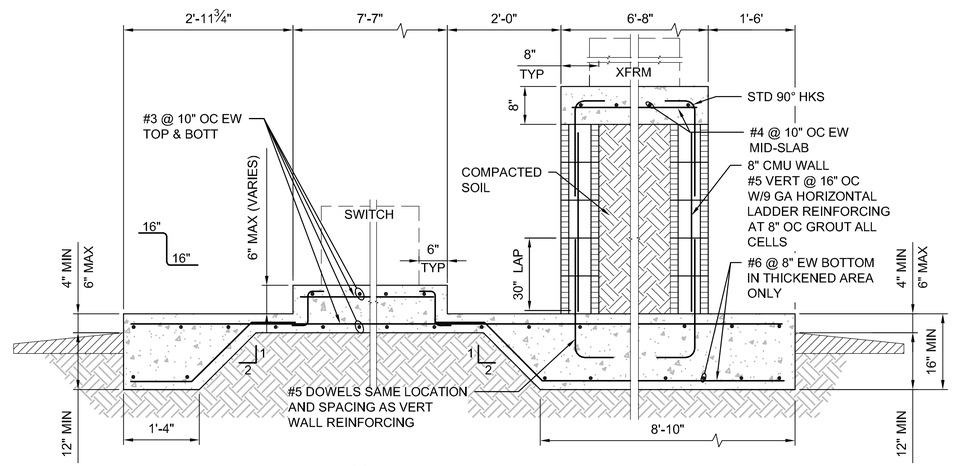


6 SECTION
3/4" = 1'-0"

0 1' 2' 3' 4'
0 1" 2" 3"
3/4" = 1'-0"

| NO. | DATE | REVISION | BY | APVD |
|---|---|---|---|---|
| | | | | |

DSGN L VAN DYK | DR AP GIRAITIS | CHK JC LONG | APVD JC LONG | BY JC LONG | APVD JON CASEY LONG FL PE No. 56083

©CH2M HILL 2012. ALL RIGHTS RESERVED.

3001 PGA BLVD. SUITE 300
PALM BEACH GARDENS, FL 33410
EB0000072 · AAC001992

NAVY MOLE FUEL STAT. / FLOATING DOCK IMPR.
KEY WEST, FLORIDA
NAVAL FACILITIES ENGINEERING COMMAND
SOUTH DIVISION - CHARLSTON, SOUTH CAROLINA

SITE

# TANK AND ELECTRICAL YARD DETAILS

REUSE OF DOCUMENTS: THIS DOCUMENT, AND THE IDEAS AND DESIGNS INCORPORATED HEREIN, AS AN INSTRUMENT OF PROFESSIONAL SERVICE, IS THE PROPERTY OF CH2M HILL AND IS NOT TO BE USED, IN WHOLE OR IN PART, FOR ANY OTHER PROJECT WITHOUT THE WRITTEN AUTHORIZATION OF CH2M HILL.

VERIFY SCALE
BAR IS ONE INCH ON ORIGINAL DRAWING.
0 1"

| | |
|---|---|
| DATE | JANUARY 25, 2012 |
| PROJ | 460764 |
| DWG | S-501 |
| SHEET | 8 OF 19 |

FINAL DRAWINGS

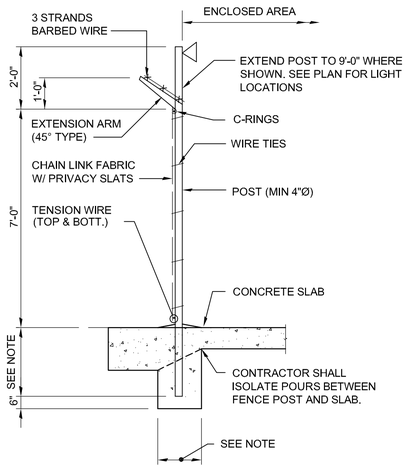


## 1 TYPICAL FENCE DETAIL

NTS

SET POSTS IN CONC. FOOTINGS OF DIAMETER 6 TIMES THE LARGEST CROSS- SECTION OF THE POST AND THE DEPTH SHALL BE A MINIMUM OF 30" PLUS AN ADDITIONAL 3" FOR EACH 1 FOOT INCREASE IN FENCE HEIGHT OVER 48" (INCLUDING BARB WIRE).

ALL FENCING SHALL RECEIVE APPROVAL OF LAYOUT IN FIELD PRIOR TO INSTALLATION.

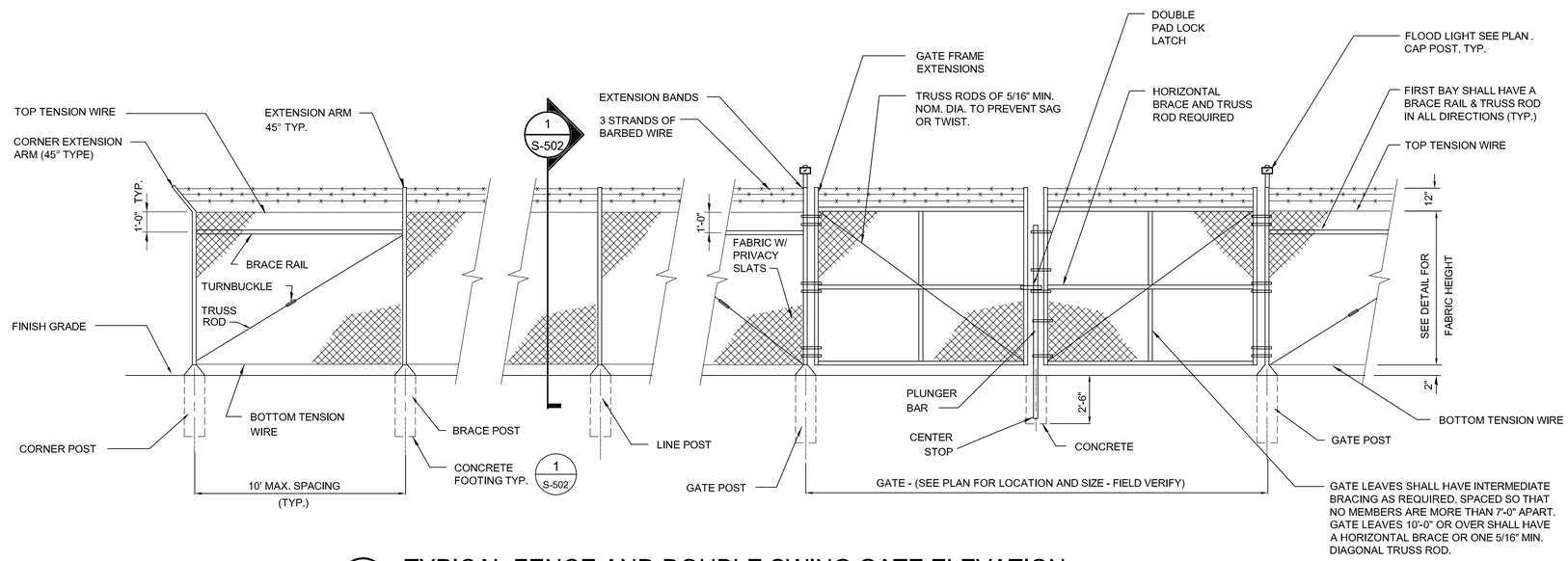


## 2 TYPICAL FENCE AND DOUBLE SWING GATE ELEVATION

NTS

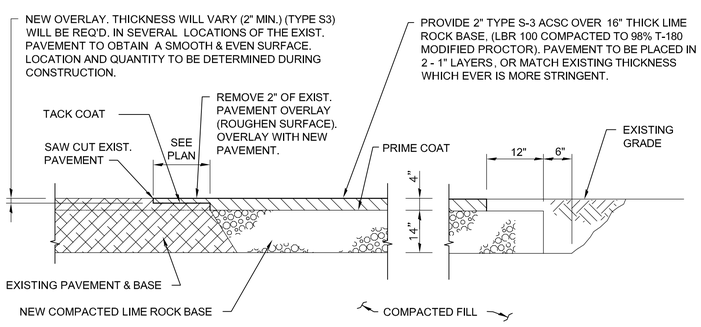


## 3 NEW PATCHING AND REPAIR DETAIL

NTS

Know what's below. Call before you dig.

JON CASEY LONG
FL PE No. 56083

| NO. | DATE | REVISION | BY | APVD |
|---|---|---|---|---|

DSGN L VAN DYK | DR AP GIRAITIS | CHK JC LONG | APVD JC LONG | BY JC LONG

©CH2M HILL 2012. ALL RIGHTS RESERVED.

CH2MHILL®
3001 PGA BLVD. SUITE 300
PALM BEACH GARDENS, FL 33410
EB0000072 · AAC001992

NAVY MOLE FUEL STAT. / FLOATING DOCK IMPR.
KEY WEST, FLORIDA
NAVAL FACILITIES ENGINEERING COMMAND
SOUTH DIVISION - CHARLSTON, SOUTH CAROLINA

SITE

# MISCELLANEOUS DETAILS

REUSE OF DOCUMENTS: THIS DOCUMENT, AND THE IDEAS AND DESIGNS INCORPORATED HEREIN, AS AN INSTRUMENT OF PROFESSIONAL SERVICE, IS THE PROPERTY OF CH2M HILL AND IS NOT TO BE USED, IN WHOLE OR IN PART, FOR ANY OTHER PROJECT WITHOUT THE WRITTEN AUTHORIZATION OF CH2MHILL.

VERIFY SCALE
BAR IS ONE INCH ON ORIGINAL DRAWING.
0 1"

| | |
|---|---|
| DATE | JANUARY 25, 2012 |
| PROJ | 460764 |
| DWG | S-502 |
| SHEET | 9 OF 19 |

FINAL DRAWINGS

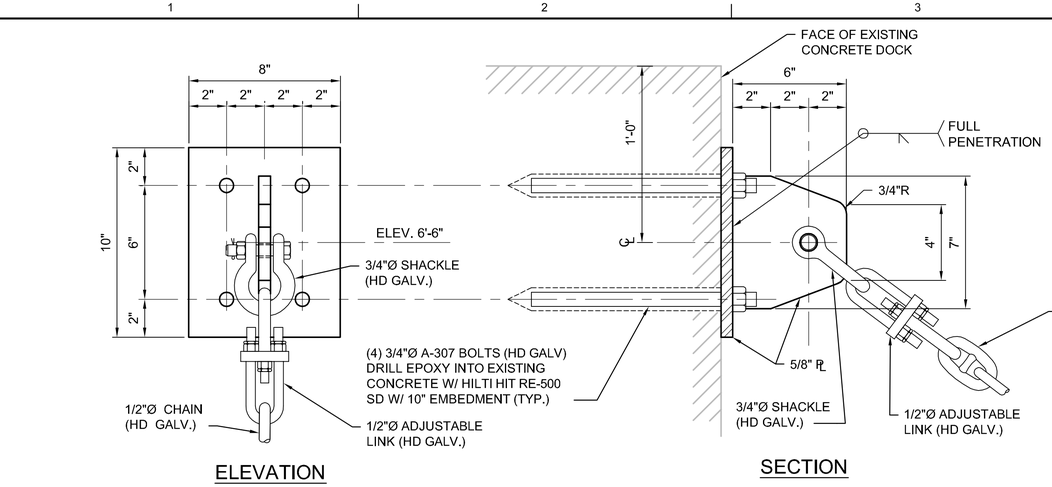


1 PAD EYE DETAIL
3" = 1'-0"

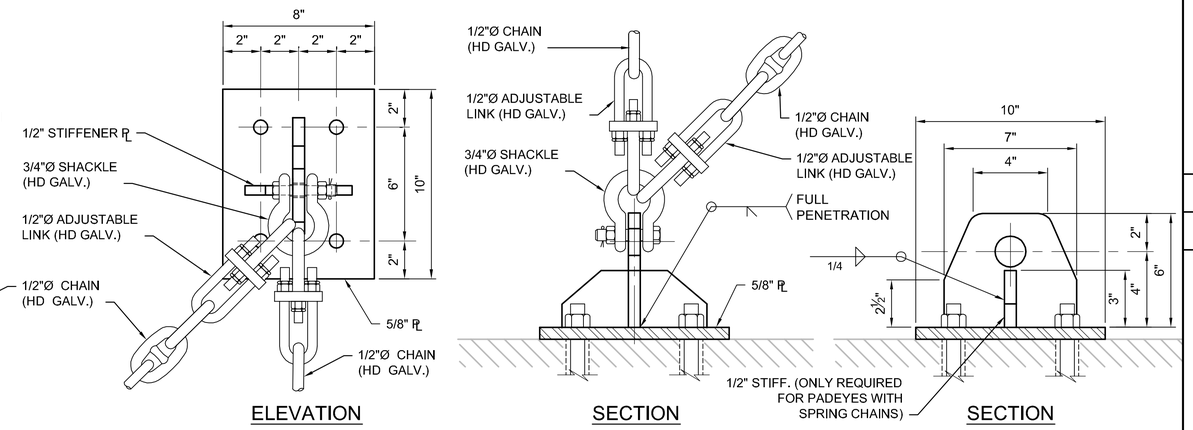


2 PAD EYE DETAIL
3" = 1'-0"

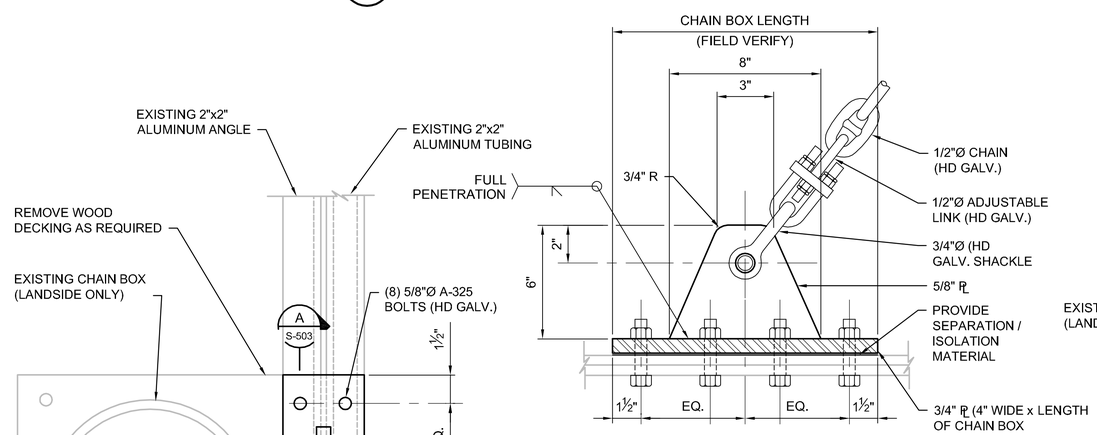


3 CHAIN BOX PADEYE
3" = 1'-0"

A SECTION
3"=1'-0"

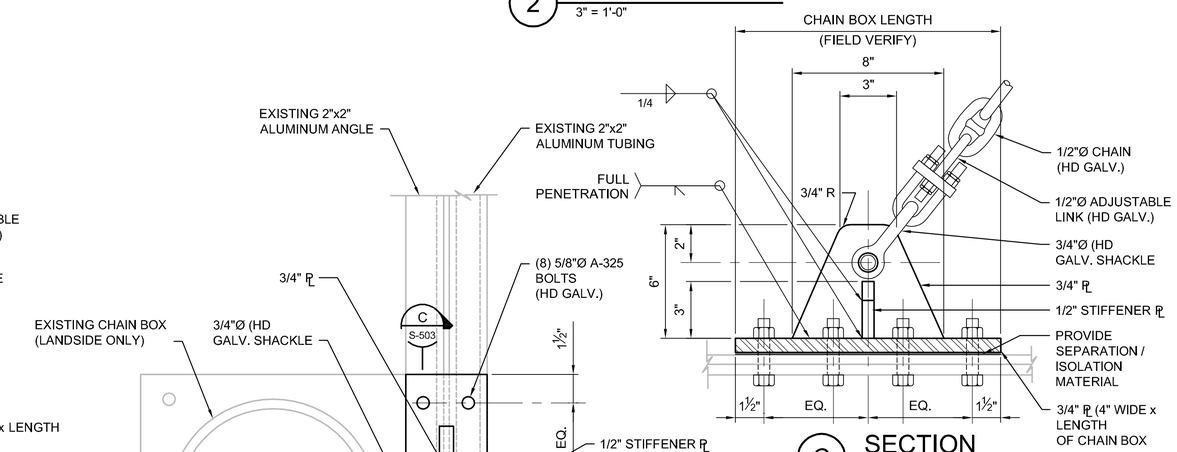


4 CHAIN BOX PADEYE
3" = 1'-0"

C SECTION
3"=1'-0"

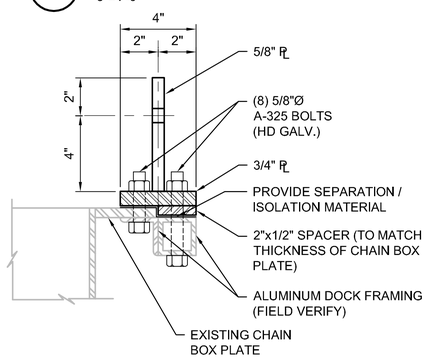


B SECTION
3"=1'-0"

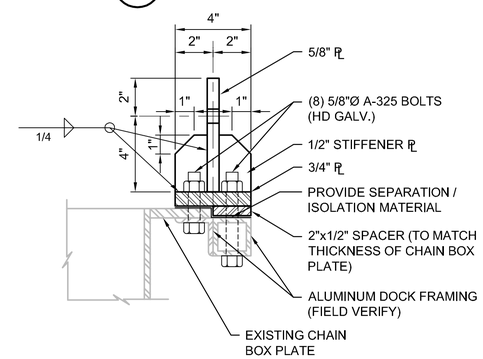


D SECTION
3"=1'-0"

NOTES:

1. ALL HARDWARE AND STEEL FABRICATION, TO BE HOT-DIPPED GALVANIZED PER ASTM A-123.
2. ALL ALUMINUM SHALL BE ASTM 5086.
3. ALL STEEL SHALL BE ASTM A-512, GR5

| NO. | DATE | REVISION | CHK | APVD | BY | APVD |
|---|---|---|---|---|---|---|
| | | | | | | |

DR J. PRUITT JC LONG APVD JC LONG BY

DSGN A ARTHAY

ANTONIO ARTHAY
FL PE No. 57912

©CH2M HILL 2012. ALL RIGHTS RESERVED.

CH2MHILL®
3001 PGA BLVD. SUITE 300
PALM BEACH GARDENS, FL 33410
EB0000072 · AAC001992

NAVY MOLE FUEL STAT. / FLOATING DOCK IMPR.
KEY WEST, FLORIDA
NAVAL FACILITIES ENGINEERING COMMAND
SOUTH DIVISION - CHARLSTON, SOUTH CAROLINA

SITE
FLOATING DOCK CONNECTION
DETAILS SHEET 1

REUSE OF DOCUMENTS: THIS DOCUMENT, AND THE IDEAS AND DESIGNS INCORPORATED HEREIN, AS AN INSTRUMENT OF PROFESSIONAL SERVICE, IS THE PROPERTY OF CH2M HILL AND IS NOT TO BE USED, IN WHOLE OR IN PART, FOR ANY OTHER PROJECT WITHOUT THE WRITTEN AUTHORIZATION OF CH2MHILL.

VERIFY SCALE
BAR IS ONE INCH ON ORIGINAL DRAWING.
0 1"

| | |
|---|---|
| DATE | JANUARY 25, 2012 |
| PROJ | 460764 |
| DWG | S-503 |
| SHEET | 10 OF 19 |

FINAL DRAWINGS

FILENAME: S-503_460764.dwg PLOT DATE: Jan31, 2013 PLOT TIME: 7:36pm

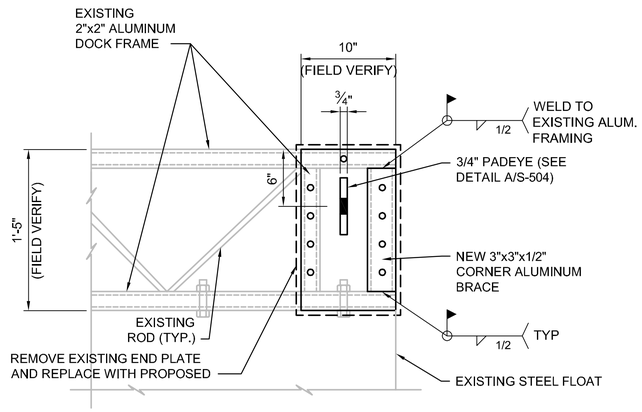


## SECTION

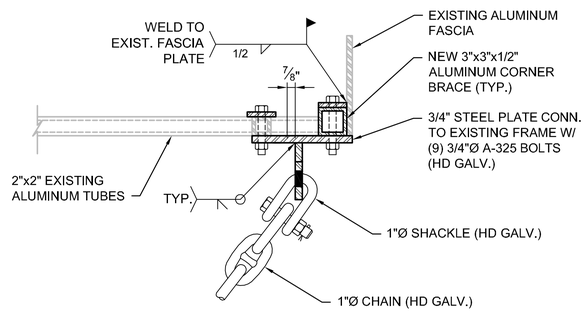


## PLAN

## 1 DETAIL
1 1/2"=1'-0"

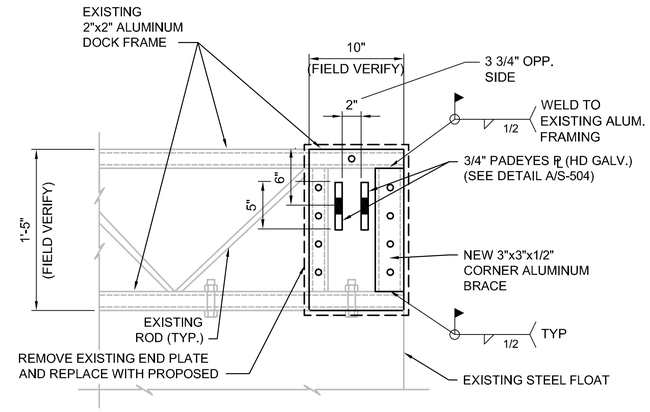


## SECTION

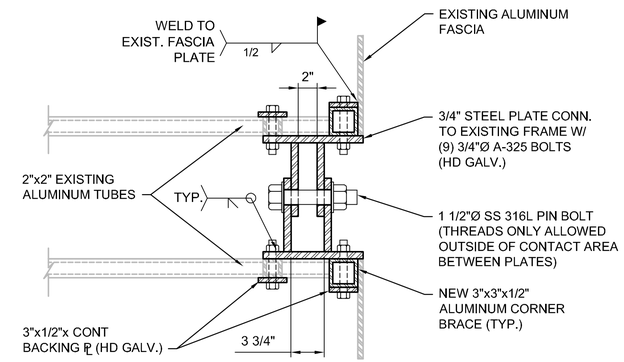


## PLAN

## 2 DETAIL
1 1/2"=1'-0"

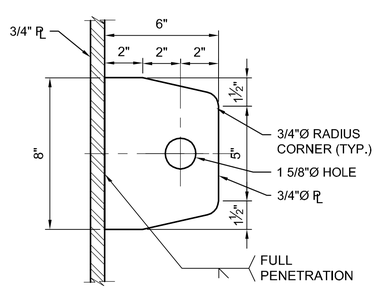


## A PADEYE DETAIL
3" = 1'-0"

NOTES:

1. ALL HARDWARE AND STEEL FABRICATION TO BE HOT-DIPPED GALVANIZED PER ASTM A-123.
2. ALL ALUMINUM SHALL BE ASTM 5086.
3. ALL STEEL SHALL BE ASTM A-572, GR 50.
4. PROVIDE ISOLATION / SEPARATION MATERIALS WHERE DIFFERENT MATERIALS TOUCH, TYPICAL.

| NO. | DATE | REVISION | BY | APVD |
|---|---|---|---|---|

DSGN A ARTHAY | DR J. PRUITT | CHK JC LONG | APVD JC LONG | BY JC LONG

ANTONIO ARTHAY
FL PE No. 57912

©CH2M HILL 2012. ALL RIGHTS RESERVED.

CH2MHILL®
3001 PGA BLVD. SUITE 300
PALM BEACH GARDENS, FL 33410
EB0000072 AAC001992

SITE
FLOATING DOCK CONNECTION
DETAILS SHEET 2

NAVY MOLE FUEL STAT. / FLOATING DOCK IMPR.
KEY WEST, FLORIDA
NAVAL FACILITIES ENGINEERING COMMAND
SOUTH DIVISION - CHARLSTON, SOUTH CAROLINA

REUSE OF DOCUMENTS: THIS DOCUMENT, AND THE IDEAS AND DESIGNS INCORPORATED HEREIN, AS AN INSTRUMENT OF PROFESSIONAL SERVICE, IS THE PROPERTY OF CH2M HILL AND IS NOT TO BE USED, IN WHOLE OR IN PART, FOR ANY OTHER PROJECT WITHOUT THE WRITTEN AUTHORIZATION OF CH2MHILL.

VERIFY SCALE
BAR IS ONE INCH ON ORIGINAL DRAWING
0 1"

| | |
|---|---|
| DATE | JANUARY 25, 2012 |
| PROJ | 460764 |
| DWG | S-504 |
| SHEET | 11 OF 19 |

FINAL DRAWINGS

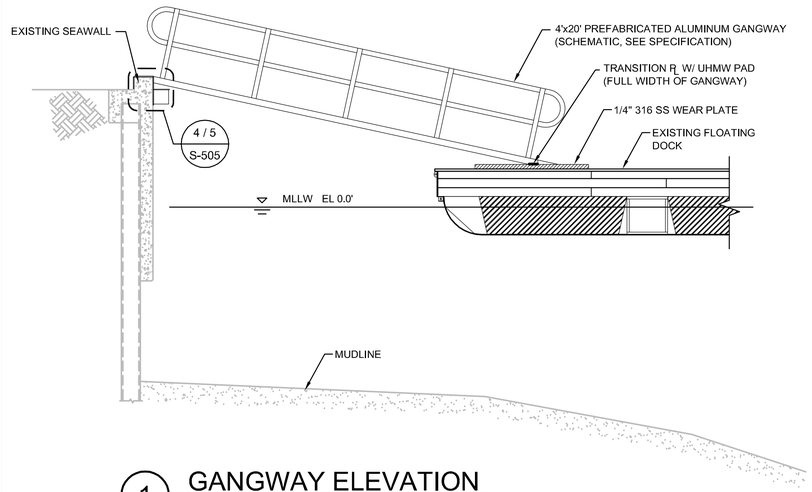


## 1 GANGWAY ELEVATION
1/4" = 1'-0"

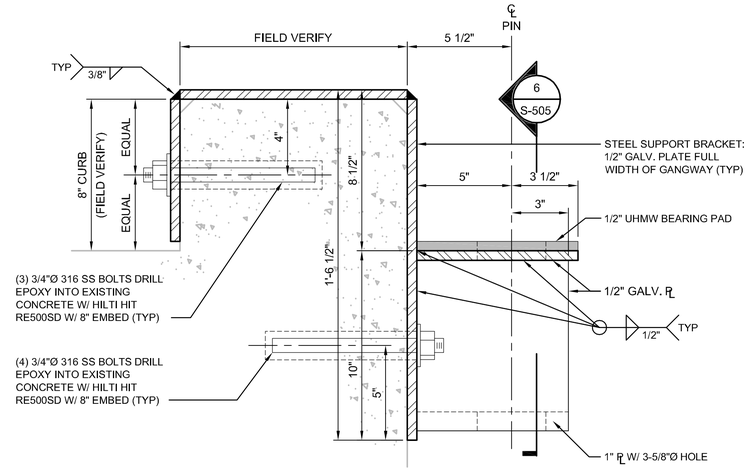


## 4 GANGWAY SUPPORT BRACKET DETAIL
3" = 1'-0"

## A NOT USED

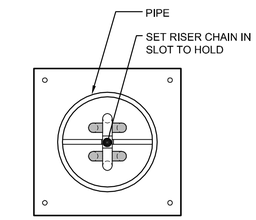


## B EXISTING FLOAT CHAIN BOX DETAIL
NTS

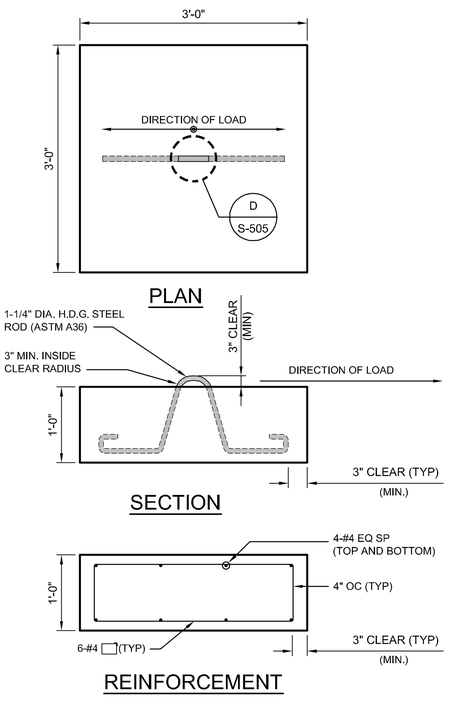


## C CONCRETE SINKER BLOCKS
1" = 1'-0"

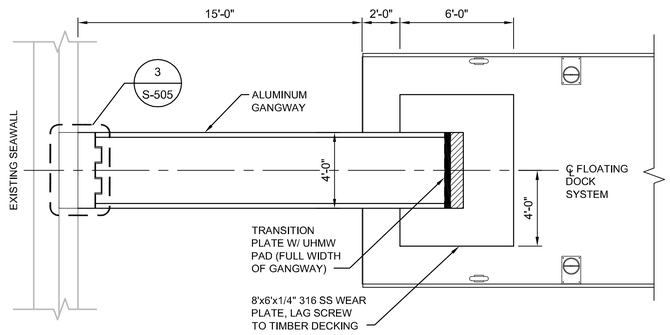


## 2 GANGWAY PLAN (100 PSF)
1/4" = 1'-0"

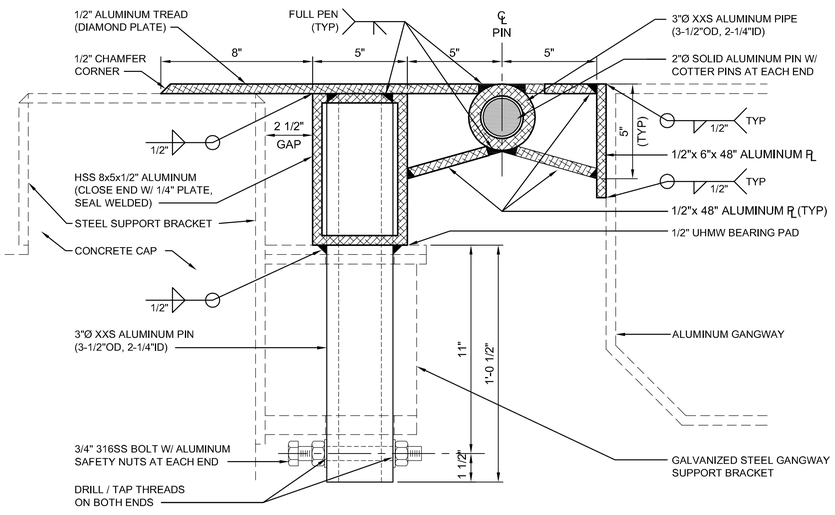


## 5 GANGWAY CONNECTION DETAIL
3" = 1'-0"

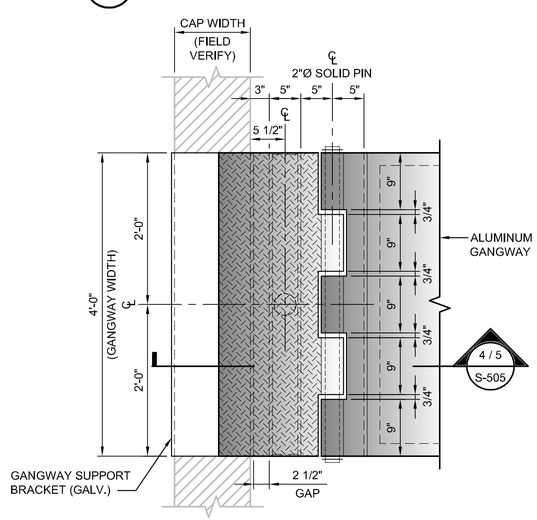


## 3 GANGWAY CONNECTION PLAN
1' = 1'-0"

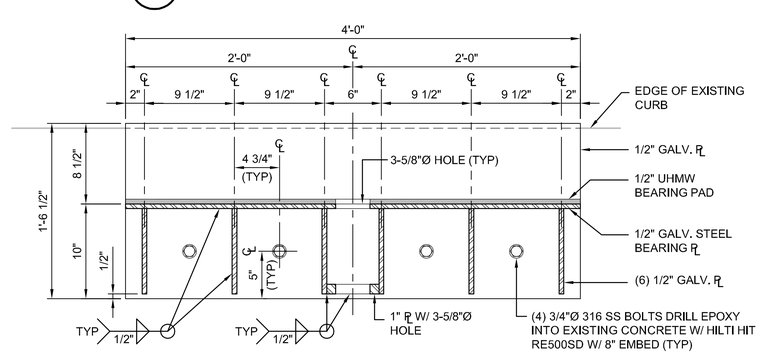


## 6 GANGWAY SUPPORT BRACKET ELEVATION
1-1/2" = 1'-0"

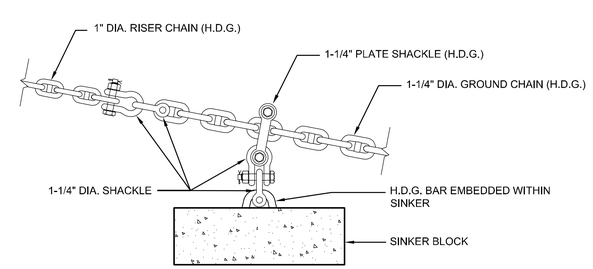


## D SINKER CONNECTION DETAIL
3/4" = 1'-0"

| NO. | DATE | REVISION | BY | APVD |
|---|---|---|---|---|

DR AJ VANHOOSER | CHK JC LONG | APVD JC LONG | BY JC LONG | APVD ANTONIO ARTHAY FL PE No. 57912

DSGN A ARTHAY

CH2MHILL®
3001 PGA BLVD. SUITE 300
PALM BEACH GARDENS, FL 33410
EB0000072 · AAC001992

NAVY MOLE FUEL STAT. / FLOATING DOCK IMPR.
KEY WEST, FLORIDA
NAVAL FACILITIES ENGINEERING COMMAND
SOUTH DIVISION - CHARLSTON, SOUTH CAROLINA

SITE
FLOATING DOCK SYSTEM
RAMP AND SINKER BLOCK DETAILS

REUSE OF DOCUMENTS: THIS DOCUMENT, AND THE IDEAS AND DESIGNS INCORPORATED HEREIN, AS AN INSTRUMENT OF PROFESSIONAL SERVICE, IS THE PROPERTY OF CH2M HILL AND IS NOT TO BE USED, IN WHOLE OR IN PART, FOR ANY OTHER PROJECT WITHOUT THE WRITTEN AUTHORIZATION OF CH2M HILL.
©CH2M HILL 2012. ALL RIGHTS RESERVED.

VERIFY SCALE
BAR IS ONE INCH ON ORIGINAL DRAWING.
0 1"

| | |
|---|---|
| DATE | JANUARY 25, 2012 |
| PROJ | 460764 |
| DWG | S-505 |
| SHEET | 12 OF 19 |

FINAL DRAWINGS

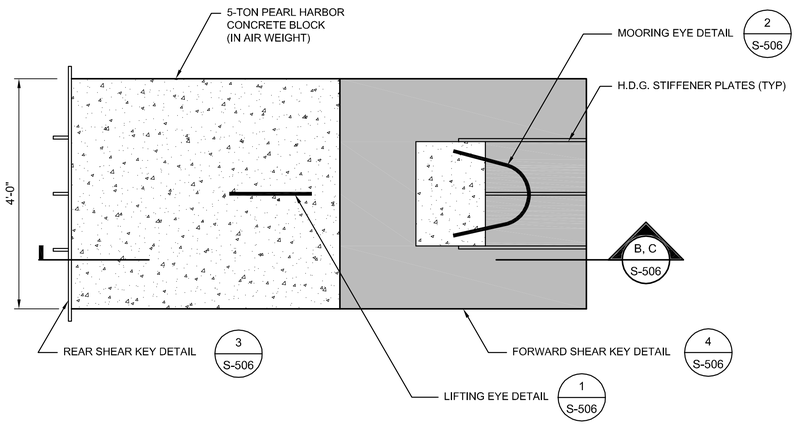


## A ANCHOR BLOCK PLAN
3/4" = 1'-0"

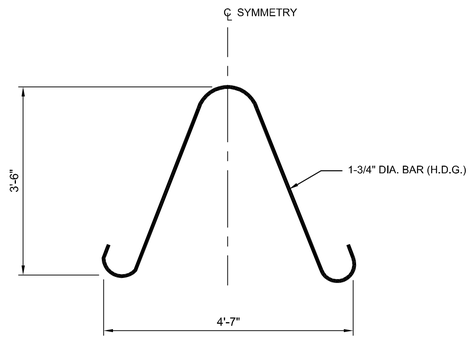


## 1 LIFTING EYE DETAIL
3/4" = 1'-0"

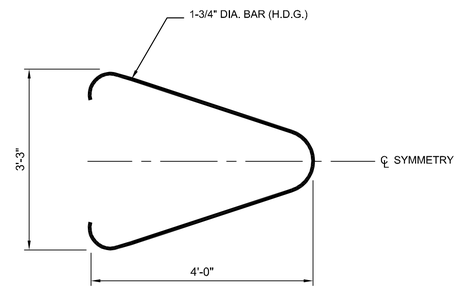


## 2 MOORING EYE DETAIL
3/4" = 1'-0"

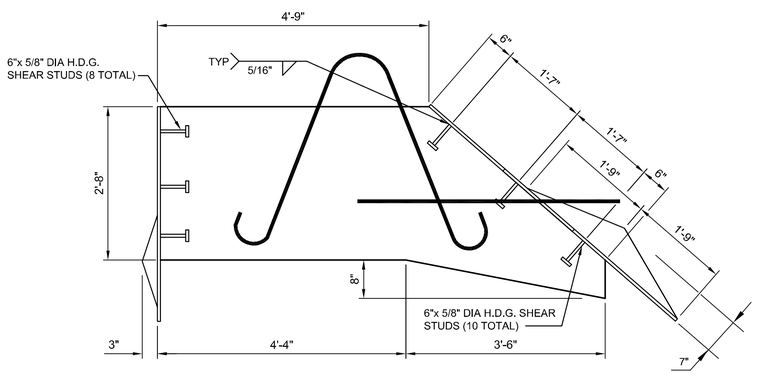


## B ANCHOR BLOCK SECTION
3/4" = 1'-0"

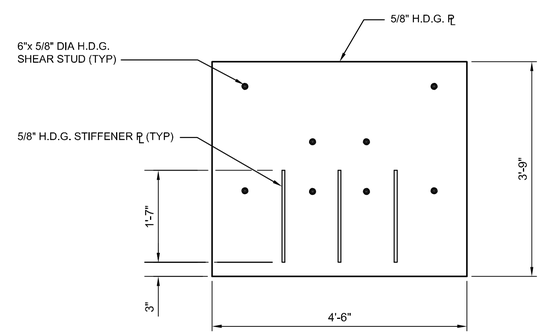


## 3 REAR SHEAR KEY DETAIL
3/4" = 1'-0"

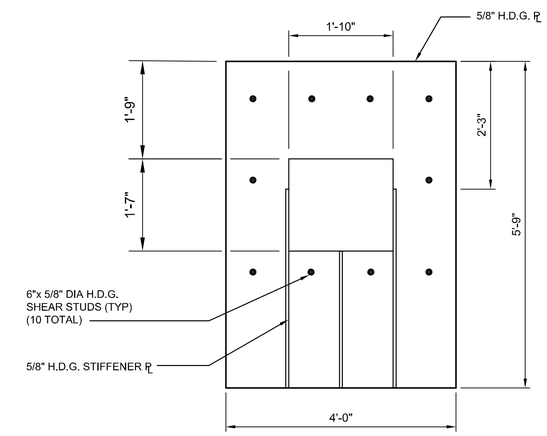


## 4 FORWARD SHEAR KEY DETAIL
3/4" = 1'-0"

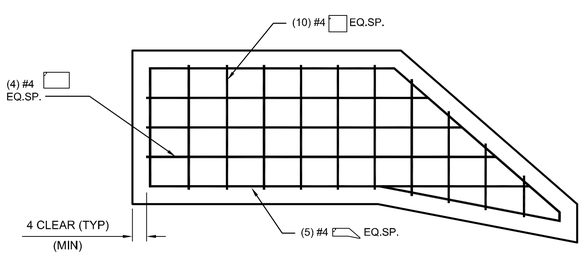


## C ANCHOR BLOCK REINFORCEMENT
3/4" = 1'-0"

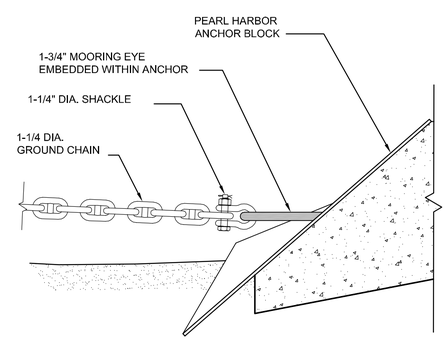


## E ANCHOR CONNECTION DETAIL
3/4" = 1'-0"

0 1' 2' 3' 4'
0 1" 2" 3"
3/4" = 1'-0"

| NO. | DATE | REVISION | BY | APVD |
|---|---|---|---|---|
| | | | | |

DR AJ VANHOOSER
CHK JC LONG
APVD JC LONG
BY JC LONG
APVD ANTONIO ARTHAY FL PE No. 57912

A ARTHAY
DSGN

©CH2M HILL 2012. ALL RIGHTS RESERVED.

CH2MHILL®
3001 PGA BLVD. SUITE 300
PALM BEACH GARDENS, FL 33410
EB0000072 AAC001992

NAVY MOLE FUEL STAT. / FLOATING DOCK IMPR.
KEY WEST, FLORIDA
NAVAL FACILITIES ENGINEERING COMMAND
SOUTH DIVISION - CHARLSTON, SOUTH CAROLINA

SITE
FLOATING DOCK SYSTEM
ANCHOR BLOCK DETAILS

REUSE OF DOCUMENTS: THIS DOCUMENT, AND THE IDEAS AND DESIGNS INCORPORATED HEREIN, AS AN INSTRUMENT OF PROFESSIONAL SERVICE, IS THE PROPERTY OF CH2M HILL AND IS NOT TO BE USED, IN WHOLE OR IN PART, FOR ANY OTHER PROJECT WITHOUT THE WRITTEN AUTHORIZATION OF CH2M HILL.

VERIFY SCALE
BAR IS ONE INCH ON ORIGINAL DRAWING.
0 1"

| | |
|---|---|
| DATE | JANUARY 25, 2012 |
| PROJ | 460764 |
| DWG | S-506 |
| SHEET | 13 OF 19 |

FINAL DRAWINGS

FILENAME: S-506_460764.dwg PLOT DATE: Jan31, 2013 PLOT TIME: 7:39pm

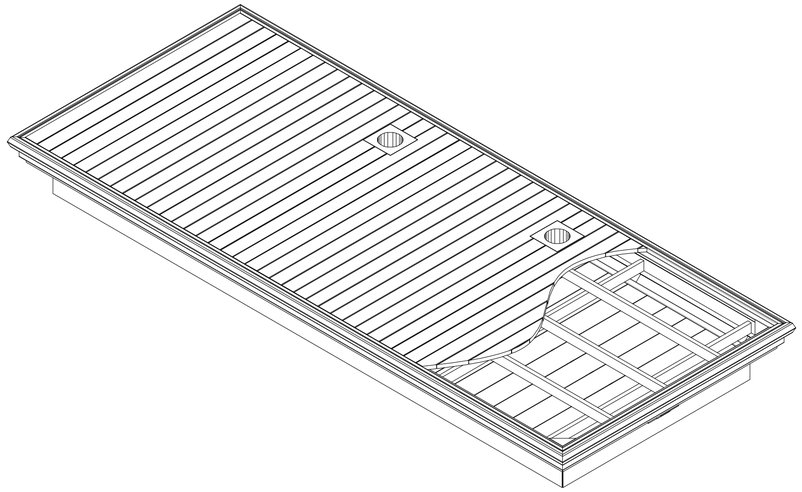

## ISOMETRIC VIEW OF ALUMINUM-FRAMED FLOATING DOCK

NTS

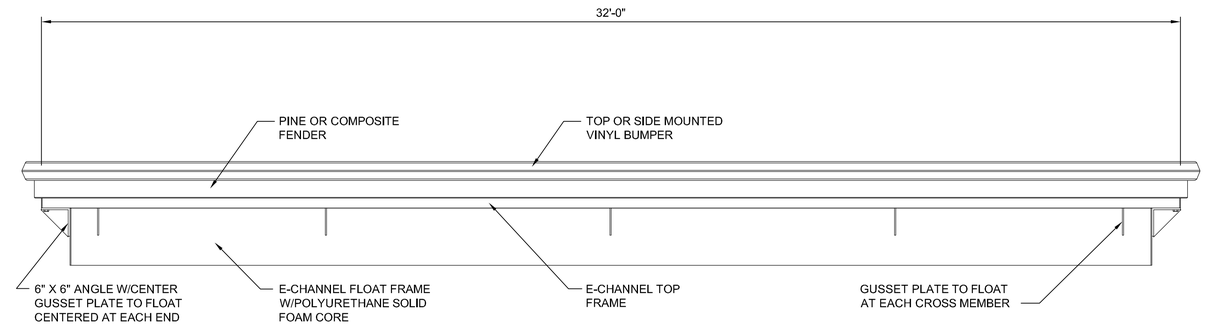


## ELEVATION VIEW FOR ALUMINUM-FRAMED FLOATING DOCK

NTS

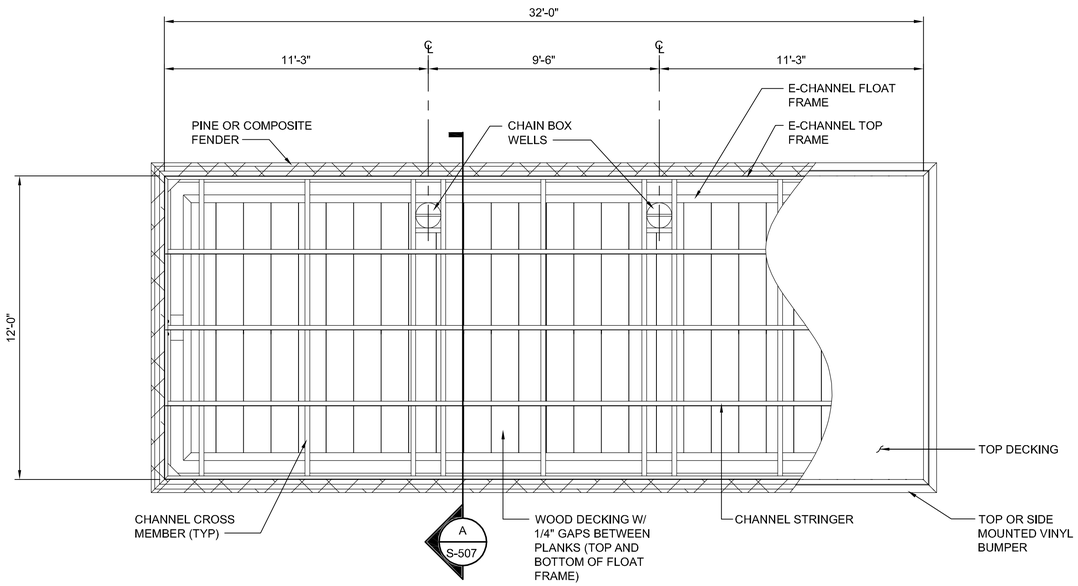


## PLAN VIEW OF ALUMINUM-FRAMED FLOATING DOCK

NTS

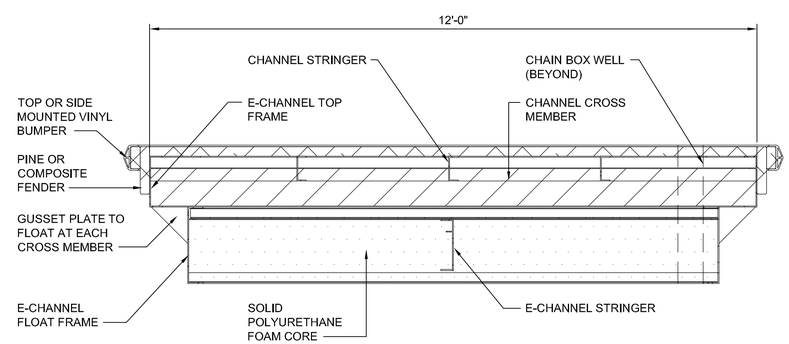


## A SECTION

NTS

## NOTES:

1. SEVEN (7) UNITS REQUIRED (TOTAL).
2. CONNECTIONS BETWEEN UNITS AND ANCHORING CONNECTIONS SHALL BE SIMILAR TO THOSE PROVIDED FOR THE EXISTING DOCK SYSTEM AS SHOWN ELSEWHERE IN THESE PLANS (SEE SHEETS S-503 AND S-504).
3. LIFTING LUGS SHALL BE PROVIDED SO THAT A SINGLE CRANE WITH SPREADER BAR CAN LIFT FLOAT OUT OF THE WATER.

| NO. | DATE | REVISION | BY | APVD |
|---|---|---|---|---|

| DSGN | DR | CHK | APVD |
|---|---|---|---|
| A ARTHAY | AJ VANHOOSER | JC LONG | JC LONG |

ANTONIO ARTHAY
FL PE No. 57912

©CH2M HILL 2012. ALL RIGHTS RESERVED.

3001 PGA BLVD. SUITE 300
PALM BEACH GARDENS, FL 33410
EB0000072 · AAC001992

NAVY MOLE FUEL STAT. / FLOATING DOCK IMPR.
KEY WEST, FLORIDA
NAVAL FACILITIES ENGINEERING COMMAND
SOUTH DIVISION - CHARLSTON, SOUTH CAROLINA

CH2MHILL®

SITE
ALTERNATE NO. 1
NEW FLOATING DOCK CONCEPT

REUSE OF DOCUMENTS: THIS DOCUMENT, AND THE IDEAS AND DESIGNS INCORPORATED HEREIN, AS AN INSTRUMENT OF PROFESSIONAL SERVICE, IS THE PROPERTY OF CH2M HILL AND IS NOT TO BE USED, IN WHOLE OR IN PART, FOR ANY OTHER PROJECT WITHOUT THE WRITTEN AUTHORIZATION OF CH2MHILL.

VERIFY SCALE
BAR IS ONE INCH ON ORIGINAL DRAWING.
0 1"

| | |
|---|---|
| DATE | JANUARY 25, 2012 |
| PROJ | 460764 |
| DWG | S-507 |
| SHEET | 14 OF 19 |

FINAL DRAWINGS

FILENAME: S-507_460764.dwg PLOT DATE: Jan31, 2013 PLOT TIME: 7:41pm

## ABBREVIATIONS:

| | |
|---|---|
| A | AMPS, AMPERE |
| AC | ALTERNATING CURRENT |
| AF | AMP FRAME |
| AFF | ABOVE FINISHED FLOOR |
| AL | ALUMINUM |
| ALT | ALTERNATE |
| AM | AMMETER |
| AMPS | AMPERES |
| APPROX | APPROXIMATE |
| ASPH | ASPHALT |
| AST | ABOVE-GROUND STORAGE TANK |
| ASTM | AMERICAN SOCIETY OF TESTING AND MATERIALS |
| AT | AMP TRIP |
| ATS | AUTOMATIC TRANSFER SWITCH |
| AUX | AUXILIARY |
| AUTO | AUTOMATIC |
| AVG | AVERAGE |
| AWG | AMERICAN WIRE GAUGE |
| BATT | BATTERY |
| BIL | BASIC IMPULSE LEVEL |
| BLDG | BUILDING |
| BKR | BREAKER |
| BNC | BAYONET-NIELL-CONCELMAN |
| BOT | BOTTOM |
| BPS | BITS PER SECOND |
| C | CONDUIT, CONDUCTOR |
| CAB | CABINET |
| CAT | CATALOG |
| CATV | CABLE TELEVISION |
| CB | CIRCUIT BREAKER, CATCH BASIN |
| CEM | CEMENT |
| CF | CUBIC FOOT |
| CIP | CAST-IN-PLACE |
| CKT | CIRCUIT |
| CLR | CLEAR |
| CL | CLASS, CENTERLINE, CURRENT LIMITING |
| CDT | CONDUIT |
| CLG | CEILING |
| CMH | COMMUNICATIONS MANHOLE |
| COMM | COMMUNICATION(S) |
| CONC | CONCRETE |
| CONN | CONNECTION |
| CONST | CONSTRUCTION |
| CONT | CONTINUED |
| CONTR | CONTRACTOR |
| COORD | COORDINATE |
| CPT | CONTROL POWER TRANSFORMER |
| CR | CONTROL RELAY |
| CRS | PVC COATED RIGID STEEL CONDUIT |
| CS | CONTROL STATION |
| CT | CURRENT TRANSFORMER |
| CTR | CENTER |
| CTRL | CONTROL |
| CU | COPPER |
| DB | DIRECT BURIED |
| dB | DECIBELS |
| DC | DIRECT CURRENT |
| DED | DEDICATED |
| DEG | DEGREES |
| DET | DETAIL |
| DIA | DIAMETER |
| DIV | DIVISION |
| DIFF | DIFFERENTIAL |
| DIM | DIMENSIONS |
| DWG | DRAWING |
| EA | EACH |
| ELEC | ELECTRIC, ELECTRICAL |
| EL | ELEVATION |
| EMBT | EMBEDMENT |
| EMT | ELECTRICAL METALLIC TUBING |
| ENCL | ENCLOSURE, ENCLOSED |
| ENGR | ENGINEER |
| EPA | EFFECTIVE PROJECTED AREA |
| EPR | ETHYLENE PROPYLENE RUBBER |
| EQ | EQUAL |
| EQUIP | EQUIPMENT |
| EXIST | EXISTING |
| EXP | EXPOSED |
| EXT | EXTERIOR |
| F | FUSE |
| FA | FIRE ALARM |
| FAA | FORCED AIR |
| FACP | FIRE ALARM CONTROL PANEL |
| FACS | FIRE ALARM CONTROL SYSTEM |
| FC | FOOTCANDLE |
| FND | FOUNDATION |
| FDR | FEEDER |
| FHP | FRACTIONAL HORSEPOWER |
| FF | FINISHED FLOOR |
| FIXT | FIXTURE |
| FLEX | FLEXIBLE |
| FLR | FLOOR |
| FLUOR | FLUORESCENT |
| FO | FIBER OPTIC |
| FT | FOOT, FEET |
| FTG | FOOTING |
| FUT | FUTURE |
| FV | FULL VOLTAGE |
| FVR | FULL VOLTAGE REVERSING |
| FVNR | FULL VOLTAGE NON-REVERSING |
| GA | GAUGE |
| GALV | GALVANIZED |
| GEN | GENERATOR |
| GFI | GROUND FAULT INTERRUPTER |
| GFCI | GROUND FAULT CIRCUIT INTERRUPTER |
| GND | GROUND |
| GRS | GALVANIZED RIGID STEEL CONDUIT |
| H | HEIGHT |
| HD | HEAVY DUTY |
| HDPE | HIGH DENSITY POLYETHYLENE |
| HH | HANDHOLE |
| HID | HIGH INTENSITY DISCHARGE |
| HOA | HAND-OFF-AUTOMATIC |
| HORIZ | HORIZONTAL |
| HP | HORSEPOWER |
| HPS | HIGH PRESSURE SODIUM |
| HR | HOUR |
| HZ | HERTZ |
| ID | INSIDE DIMMENSION |
| IE | INVERT ELEVATION |
| IEEE | INSTITUTE OF ELECTRICAL & ELECTRONIC ENGINEERS |
| IES | ILLUMINATING ENGINEERING SOCIETY (OF NORTH AMERICA) |
| IN | INCH(ES) |
| INCL | INCLUDING |
| INST | INSTANTANEOUS |
| INSTR | INSTRUMENT, INSTRUMENTATION |
| IMH | INSTRUMENTATION MANHOLE |
| INV | INVERT |
| J, JB | JUNCTION BOX J |
| JCT | UNCTION |
| JT | JOINT |
| K | KIRK KEY INTERLOCK |
| KA | KILO AMPERES |
| KAIC | KILO AMPS INTERUPTING CAPACITY |
| KCMIL | ONE THOUSAND CIRCULAR MILS |
| KV | KILOVOLTS |
| KVA | KILOVOLT AMPERES |
| KVAR | KILOVOLT AMPERES REACTIVE |
| KW | KILOWATTS |
| KWH | KILOWATT HOURS |
| KWHD | KILOWATT HOURS DEMAND |
| L | LENGTH |
| LB(S) | POUND(S) |
| LC | LOAD CENTER |
| LED | LIGHT EMITTING DIODE |
| LF | LINEAR FEET |
| LOC | LOCATIONS |
| LS | LIMIT SWITCH |
| LT(S) | LIGHT(S) |
| LTG | LIGHTING |
| LV | LOW VOLTAGE |
| LVMH | LOW VOLTAGE MANHOLE |
| L-G | LINE-TO-GROUND |
| L-L | LINE-TO-LINE |
| M | MOTOR |
| MAX | MAXIMUM |
| MCM | ONE THOUSAND CIRCULAR MILS |
| MCOV | MAXIMUM CIRCUIT OPERATING VOLTAGE |
| MECH | MECHANICAL |
| MFR | MANUFACTURER |
| MH | MANHOLE |
| MIN | MINIMUM |
| MISC | MISCELLANEOUS |
| MOV | METAL OXIDE VARISTOR |
| MLO | MAIN LUGS ONLY |
| MTD | MOUNTED |
| MTR | MOTOR |
| MV | MEDIUM VOLTAGE |
| MVA | MEGAVOLT AMPERES |
| N | NEUTRAL |
| NC | NORMALLY CLOSED |
| NE | NORTH EAST |
| NEC | NATIONAL ELECTRICAL CODE |
| NEMA | NATIONAL ELECTRICAL MANUFACTURES ASSOCIATION |
| NEUT | NEUTRAL |
| NIC | NOT IN CONTRACT |
| NO | NORMALLY OPEN, NUMBER |
| NFPA | NATIONAL FIRE PROTECTION ASSOCIATION |
| NTS | NOT TO SCALE |
| OC | ON CENTER(S) |
| OD | OUTSIDE DIAMETER |
| OH | OVERHEAD |
| OL | OVERLOADS |
| OPP | OPPOSITE |
| OPER | OPERATOR |
| OWS | OIL WATER SEPERATOR |
| P | POLE |
| PB | PULL BOX, PUSH BUTTON |
| PE | PHOTOELECTRIC DEVICE |
| PF | POWER FACTOR |
| PH, ø | PHASE |
| PLC | PROGRAMABLE LOGIC CONTROLLER |
| PM | POWER METER |
| PMH | PRIMARY MANHOLE |
| PNL | PANEL |
| PNLBD | PANELBOARD |
| PR | PAIR |
| PRI | PRIMARY |
| PROJ | PROJECT |
| PS | PRESSURE SENSOR, POWER SUPPLY |
| PSI | POUNDS PER SQUARE INCH |
| PT | POTENTIAL TRANSFORMER, PRESSURE TRANSMITTER |
| PVC | POLYVINYL CHLORIDE |
| PWR | POWER |
| QTY | QUANTITY |
| RECP | RECEPTACLE |
| REF | REFERENCE |
| REINF | REINFORCEMENT |
| REQD | REQUIRED |
| REV | REVISION, REVISED |
| RF | RATING FACTOR |
| RGS | RIGID GALVANIZED STEEL |
| RMS | ROOT-MEAN-SQUARE |
| RVAT | REDUCED VOLTAGE AUTO TRANSFORMER |
| RVNR | REDUCED VOLTAGE NON-REVERSING |
| R/W | RIGHT-OF-WAY |
| SA | SURGE ARRESTER |
| SCH | SCHEDULE |
| SEC | SECONDARY, SECOND(S) |
| SECT | SECTION |
| SF | SQUARE FOOT, SQUARE FEET |
| SHLD | SHIELDED |
| SHT | SHEET |
| SI | SQUARE INCH, SQUARE INCHES |
| SIM | SIMILAR |
| SMH | SECONDARY MANHOLE |
| SPDT | SINGLE POLE DOUBLE THROW |
| SPEC | SPECIFICATION(S) |
| SQ | SQUARE |
| SS | STAINLESS STEEL |
| ST | STREET |
| STA | STATION |
| STD | STANDARD |
| STL | STEEL |
| STR | STRANDED |
| SW | SWITCH |
| SWBD | SWITCHBOARD |
| SYM | SYMMETRICAL |
| SYNC | SYNCHRONOUS |
| SY | SQUARE YARD, SQUARE YARDS |
| SYS | SYSTEM |
| TB | TERMINAL BLOCK |
| TBD | TO BE DETERMINED |
| TD | TIME DELAY |
| TELE | TELEPHONE |
| TEMP | TEMPORARY, TEMPERATURE |
| TERM | TERMINAL |
| THHN | HEAT RESISTANT THERMOPLASTIC INSULATION |
| THK | THICK |
| THWN | HEAT AND MOISTURE RESISTANT THERMOPLASTIC INSULATION |
| THRU | THROUGH |
| TOS | TOP OF STEEL, TOP OF SLAB |
| TYP | TYPICAL |
| TWSH | TWISTED SHEILDED |
| UBC | UNIFORM BUILDING CODE |
| UG | UNDERGROUND |
| UL | UNDERWRITERS LABORATORY |
| UNO | UNLESS NOTED OTHERWISE |
| UPS | UNINTERRUPTABLE POWER SUPPLY |
| UTP | UNSHIELDED TWISTED PAIR |
| UVIR | ULTRAVIOLET INFRARED |
| V | VOLTS, VOLTAGE |
| VAR | VOLT AMPERES REACTIVE |
| VERT | VERTICAL |
| VM | VOLT METER |
| VOL | VOLUME |
| VT | VOLTAGE TRANSFORMER |
| W | WATT, WIDE, WIDTH, WIRE |
| WF | WASTE FUEL |
| WH | WATTHOUR |
| WM | WATTHOUR METER |
| W/O | WITHOUT |
| WP | WEATHERPROOF |
| WT | WEIGHT |
| WWF | WELDED WIRE FABRIC |
| W/ | WITH |
| X | REACTANCE |
| XFMR | TRANSFORMER |
| XHHW | HEAT AND MOISTURE RESISTANT CROSS LINKED SYNTHETIC POLYMER |
| XP | EXPLOSIONPROOF |
| Z | IMPEDANCE |

## LEGEND:

- (#) REFERENCE NOTE TAG.
- (#) FEEDER LEGEND TAG.
- (#) CONDUIT CONTENTS TAG.
- (K#) KIRK KEY INTERLOCK.
- UG ELECTRICAL CONDUIT OR DUCT BANK AS INDICATED.
- ELECTRICAL DUCT BANK.
- MANHOLE.
- CONNECTION POINT.
- DRIVEN GROUNDING ROD ELECTRODE.
- TRANSFORMER.
- CIRCUIT BREAKER.
- FU FUSE.
- NO CONTACT.
- R# NC CONTACT.
- OR (CR) CONTROL RELAY.
- (C) COIL.
- (M) POWER METER.
- PROTECTIVE TRIP DEVICE.
- ELBOW TERMINATORS.
- CURRENT TRANSFORMER.
- (50) INSTANTANEOUS TIME-OVERCURRENT PROTECTIVE RELAY
- (51) TIME-OVERCURRENT PROTECTIVE RELAY
- (M) RELAY — MULTI-FUNCTION PROTECTIVE RELAY WITH POWER METER
- ⊞ POSITIVE DC VOLTAGE TERMINAL.
- ⊟ NEGATIVE DC VOLTAGE TERMINAL.
- PB# MOMENTARY PUSHBUTTON WITH NC CONTACTS.
- PB# MOMENTARY PUSHBUTTON WITH NO CONTACTS.
- PB# MOMENTARY PUSHBUTTON WITH BOTH NC AND NO CONTACTS.
- SS# OFF ON OX — 2-POSITION SELECTOR SWITCH.
- SS# ON OX — KEY OPERATED 2-POSITION, SPRING RETURN FROM RIGHT TO LEFT, SELECTOR SWITCH WITH KEY RETAINED IN RIGHT POSITION.
- TR# — TIMING RELAY WITH TIMING SETTING ADJUSTABLE FROM 0 TO 3600 SECONDS (SET FOR 3600 SECONDS). TIMER STARTS ON REMOVAL OF VOLTAGE, CONTACTS CHANGE STATE ON APPLICATION OF VOLTAGE AND AGAIN AT END OF TIMING SEQUENCE. REAPPLICATION OF VOLTAGE RESETS TIMER.
- TR# — TIMING RELAY CONTACT SHOWN IN RESTING STATE BEFORE APPLICATION OF VOLTAGE.
- SC — CIRCUIT BREAKER ELECTRIC OPERATOR (e.g. SPRING CHARGING MECHANISM MOTOR)
- SC — CIRCUIT BREAKER ELECTRIC OPERATOR AUXILIARY CONTACT IN NO STATE WHEN ELECTRIC OPERATOR IS NOT AVAILABLE FOR OPERATION.
- 86 OR (86) — MANUALLY RESET LOCKOUT RELAY.
- 86 — LOCKOUT RELAY CONTACT SHOWN IN RESET STATE.
- 25A — CIRCUIT BREAKER AUXILIARY CONTACT SHOWN IN NO STATE WHEN CIRCUIT BREAKER IS OPEN OR TRIPPED, AND CLOSED OTHERWISE.
- 25B — CIRCUIT BREAKER AUXILIARY CONTACT SHOWN IN NC STATE WHEN CIRCUIT BREAKER IS OPEN OR TRIPPED, AND OPEN OTHERWISE.
- R# — CONTROL (OR PILOT) RELAY CONTACTS SHOWN IN NO STATE WHEN RELAY COIL IS DE-ENERGIZED.
- R# — CONTROL (OR PILOT) RELAY CONTACTS SHOWN IN NC STATE WHEN RELAY COIL IS DE-ENERGIZED.
- RIC# — RECEPTACLE INTERLOCK CONTACTS SHOWN IN NO STATE WHEN RECEPTACLE DOOR IS IN FULLY CLOSED AND LOCKED POSITION OR PLUG IS IN FULLY ENGAGED AND LOCKED POSITION, AND CLOSED OTHERWISE.
- PL# (W) — PILOT LIGHT; COLOR IS INDICATED BY LETTER INSIDE SYMBOL (e.g. W = WHITE, R = RED, G = GREEN).
- (#) — MOTORIZED EQUIPMENT. "#" IDENTIFIES MOTOR HORSEPOWER.
- NEMA RATED ENCLOSED COMBINATION DISCONNECTING MEANS AND MAGNETIC MOTOR STARTER UNIT.
- NEMA RATED MOTOR STARTER UNIT.
- F — FUSED DISCONNECT SWITCH.
- NF — NON-FUSED DISCONNECT SWITCH.
- CB — ENCLOSED CIRCUIT BREAKER.
- [X] — CIRCUIT #
- FLOOD LIGHT

| NO. | DATE | REVISION | BY | APVD |
|---|---|---|---|---|

DSGN JC LONG | DR AP GIRAITIS | CHK JC LONG | APVD JC LONG

JACK BARTON
FL PE No. 42467

©CH2M HILL 2012. ALL RIGHTS RESERVED.

CH2MHILL®
3001 PGA BLVD. SUITE 300
PALM BEACH GARDENS, FL 33410
EB00000072 AAC001992

NAVY MOLE FUEL STAT. / FLOATING DOCK IMPR.
KEY WEST, FLORIDA
NAVAL FACILITIES ENGINEERING COMMAND
SOUTH DIVISION - CHARLSTON, SOUTH CAROLINA

ELECTRICAL

# LEGEND, ABBREVIATIONS GENERAL NOTES

REUSE OF DOCUMENTS: THIS DOCUMENT, AND THE IDEAS AND DESIGNS INCORPORATED HEREIN, AS AN INSTRUMENT OF PROFESSIONAL SERVICE, IS THE PROPERTY OF CH2M HILL AND IS NOT TO BE USED, IN WHOLE OR IN PART, FOR ANY OTHER PROJECT WITHOUT THE WRITTEN AUTHORIZATION OF CH2MHILL.

VERIFY SCALE
BAR IS ONE INCH ON ORIGINAL DRAWING.
0 1"

| | |
|---|---|
| DATE | JANUARY 25, 2012 |
| PROJ | 460764 |
| DWG | E-001 |
| SHEET | 15 OF 19 |

FINAL DRAWINGS

# FORT ZACHARY TAYLOR

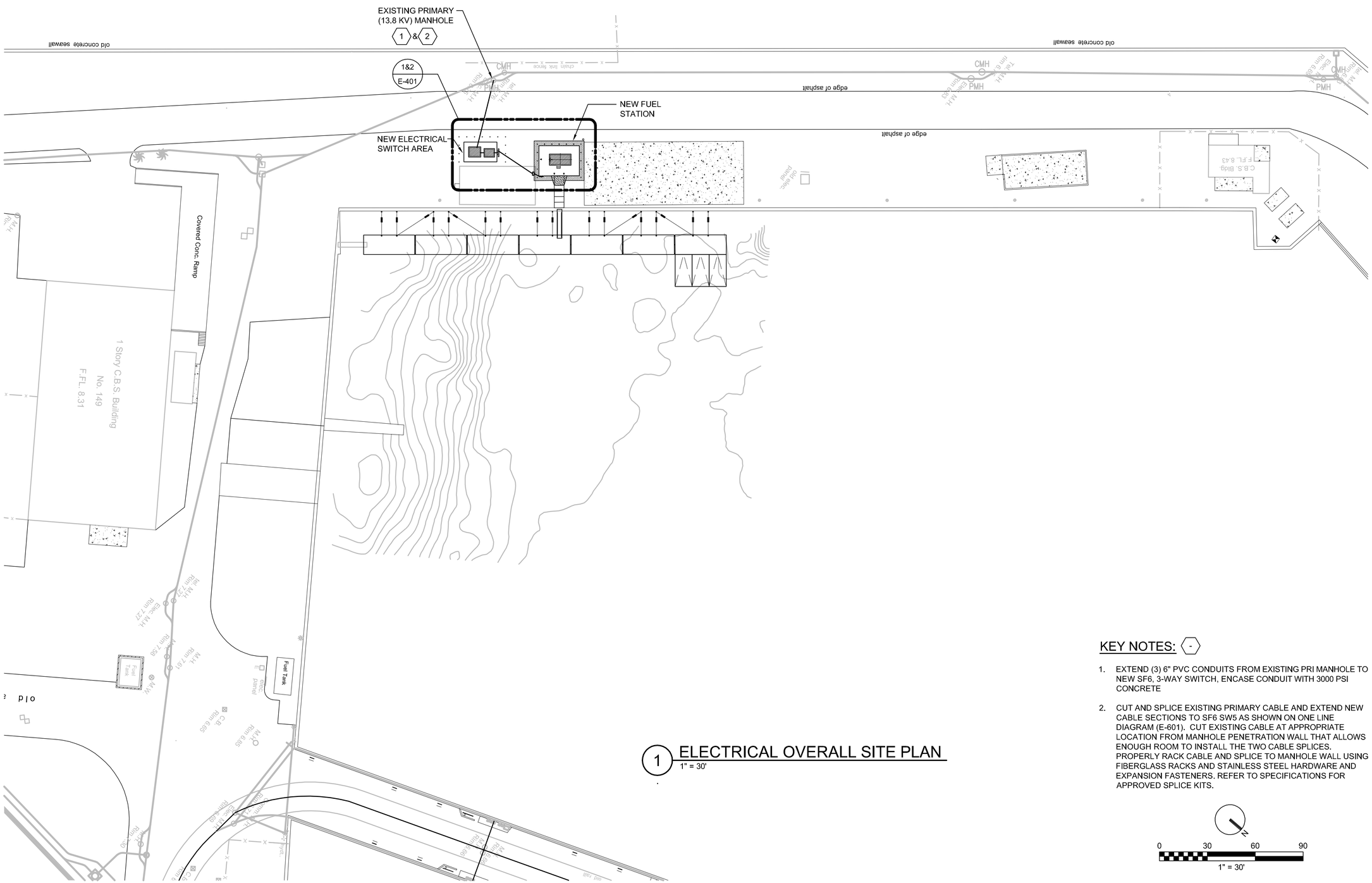


## 1 ELECTRICAL OVERALL SITE PLAN

1" = 30'

## KEY NOTES: (-)

1. EXTEND (3) 6" PVC CONDUITS FROM EXISTING PRI MANHOLE TO NEW SF6, 3-WAY SWITCH, ENCASE CONDUIT WITH 3000 PSI CONCRETE
2. CUT AND SPLICE EXISTING PRIMARY CABLE AND EXTEND NEW CABLE SECTIONS TO SF6 SW5 AS SHOWN ON ONE LINE DIAGRAM (E-601). CUT EXISTING CABLE AT APPROPRIATE LOCATION FROM MANHOLE PENETRATION WALL THAT ALLOWS ENOUGH ROOM TO INSTALL THE TWO CABLE SPLICES. PROPERLY RACK CABLE AND SPLICE TO MANHOLE WALL USING FIBERGLASS RACKS AND STAINLESS STEEL HARDWARE AND EXPANSION FASTENERS. REFER TO SPECIFICATIONS FOR APPROVED SPLICE KITS.

N

0 30 60 90

1" = 30'

JACK BARTON
FL PE No. 42467

| NO. | DATE | REVISION | BY | APVD |
|---|---|---|---|---|
| | | | | |

DSGN JC LONG | DR AP GIRAITIS | CHK JC LONG | APVD JC LONG | BY JC LONG | APVD

©CH2M HILL 2012. ALL RIGHTS RESERVED.

CH2MHILL®
3001 PGA BLVD. SUITE 300
PALM BEACH GARDENS, FL 33410
EB0000072 · AAC001992

NAVY MOLE FUEL STAT. / FLOATING DOCK IMPR.
KEY WEST, FLORIDA
NAVAL FACILITIES ENGINEERING COMMAND
SOUTH DIVISION - CHARLSTON, SOUTH CAROLINA

ELECTRICAL
SOUTH MOLE SITE PLAN

REUSE OF DOCUMENTS: THIS DOCUMENT, AND THE IDEAS AND DESIGNS INCORPORATED HEREIN, AS AN INSTRUMENT OF PROFESSIONAL SERVICE, IS THE PROPERTY OF CH2M HILL AND IS NOT TO BE USED, IN WHOLE OR IN PART, FOR ANY OTHER PROJECT WITHOUT THE WRITTEN AUTHORIZATION OF CH2M HILL.

VERIFY SCALE
BAR IS ONE INCH ON ORIGINAL DRAWING.
0 1"

| | |
|---|---|
| DATE | JANUARY 25, 2012 |
| PROJ | 460764 |
| DWG | E-101 |
| SHEET | 16 OF 19 |

FINAL DRAWINGS

FILENAME: E-101_460764.dwg PLOT DATE: Jan31, 2013 PLOT TIME: 7:14pm

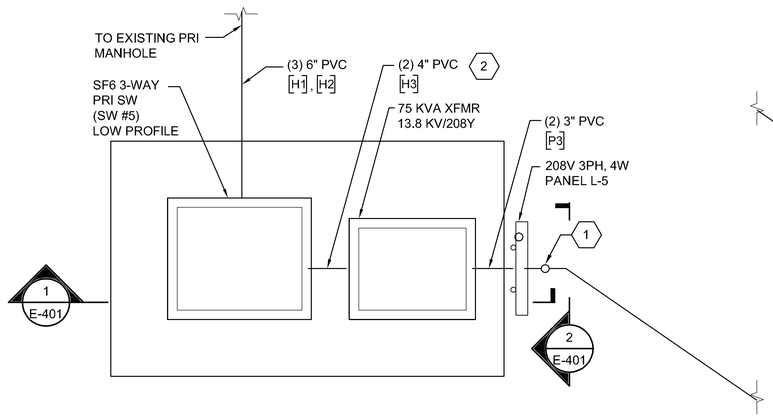


## B ENLARGED ELECTRICAL PLATFORM PLAN

1/4" = 1'-0"

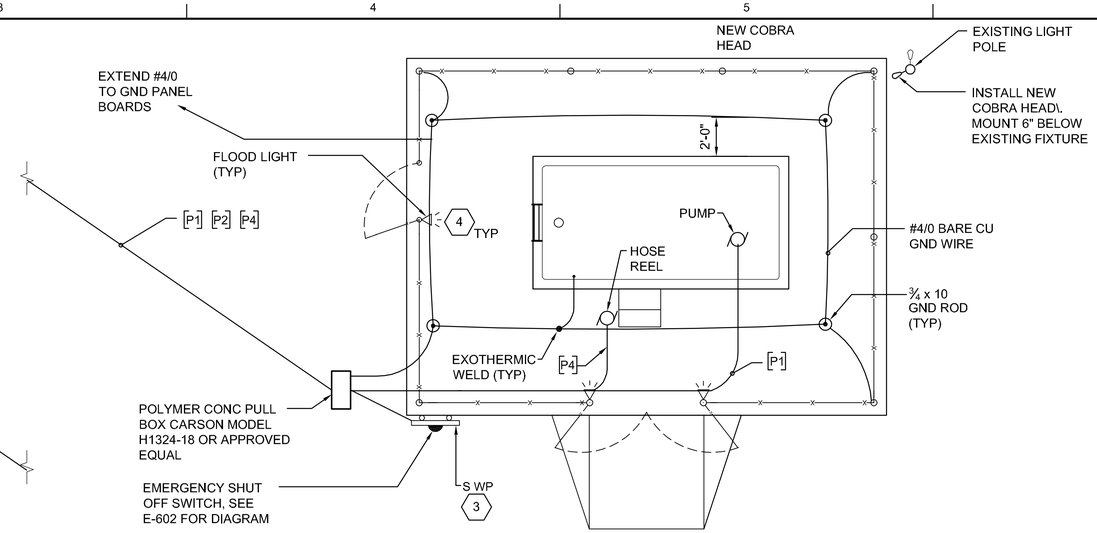


## A ENLARGED FUEL STATION ELECTRICAL PLAN

1/4" = 1'-0"

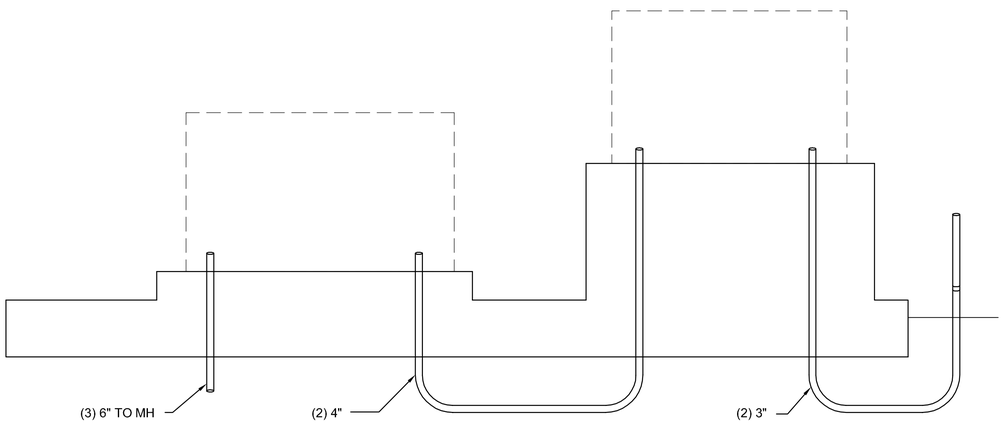


## 1 DETAIL

NTS

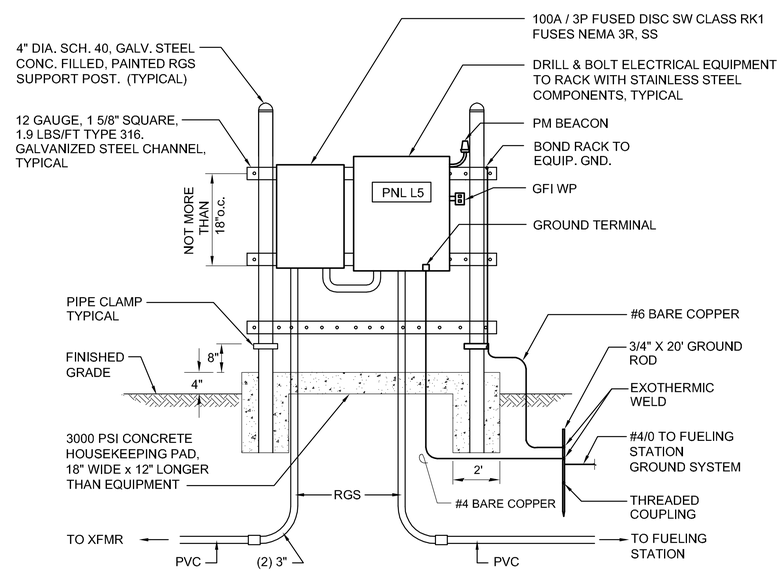


## 2 DETAIL

NTS

## KEY NOTES: (-)

1. SEAL ALL CONDUITS ROUTED TO FUELING STATION PER NEC.
2. CALL OUT REPRESENTS TOTAL CONDUIT COUNT (ACTIVE AND SPARE). REFER TO E-602 FOR CKT SCD.
3. MOUNT LIGHT SWITCH ON EMERGENCY SHUT OFF RACK.
4. MOUNT FLOOD LIGHT ON EXTENDED GATE POST.
5. ALL EXPOSED CONDUIT ABOVE GRADE SHALL BE RGS.

N

0 — 1/2" = 1'-0"

| NO. | DATE | REVISION | BY | APVD |
|---|---|---|---|---|

DSGN JC LONG | DR AP GIRAITIS | CHK JC LONG | APVD JC LONG | BY JC LONG | APVD

JACK BARTON
FL PE No. 42467

©CH2M HILL 2012. ALL RIGHTS RESERVED.

CH2MHILL®
3001 PGA BLVD, SUITE 300
PALM BEACH GARDENS, FL 33410
EB0000072 · AAC001992

NAVY MOLE FUEL STAT. / FLOATING DOCK IMPR.
KEY WEST, FLORIDA
NAVAL FACILITIES ENGINEERING COMMAND
SOUTH DIVISION - CHARLSTON, SOUTH CAROLINA

ELECTRICAL

# ENLARGED FUEL STATION ELECTRICAL PLAN

REUSE OF DOCUMENTS: THIS DOCUMENT, AND THE IDEAS AND DESIGNS INCORPORATED HEREIN, AS AN INSTRUMENT OF PROFESSIONAL SERVICE, IS THE PROPERTY OF CH2M HILL AND IS NOT TO BE USED, IN WHOLE OR IN PART, FOR ANY OTHER PROJECT WITHOUT THE WRITTEN AUTHORIZATION OF CH2M HILL.

VERIFY SCALE
BAR IS ONE INCH ON ORIGINAL DRAWING.
0 — 1"

| | |
|---|---|
| DATE | JANUARY 25, 2012 |
| PROJ | 460764 |
| DWG | E-401 |
| SHEET | 17 OF 19 |

FINAL DRAWINGS

SHORT CIRCUIT DATA FROM SOURCE
AVAILABLE 3Ø SYMMETRICAL RMS CURRENT = 8.39kA
AVAILABLE L–G SYMMETRICAL RMS CURRENT = 5.91kA
POSITIVE SEQUENCE IMPEDANCE, Z(+) = 0.33166 + j0.89011
ZERO SEQUENCE IMPEDANCE, Z (0) = 1.03794 + j1.94628

CT RATINGS:

| CT RATIO | RELAY CLASS | RF | METERING CLASS |
|---|---|---|---|
| 400/5 | C100 | 4.0 | 0.3 THRU B–0.2 |
| 2000/5 | ---- | 1.5 | 0.3 THRU B–1.8 |
| 3200/5 | ---- | 1.5 | 0.3 THRU B–1.8 |
| 5000/5 | C800 | 1.5 | 0.3 THRU B–1.8 |

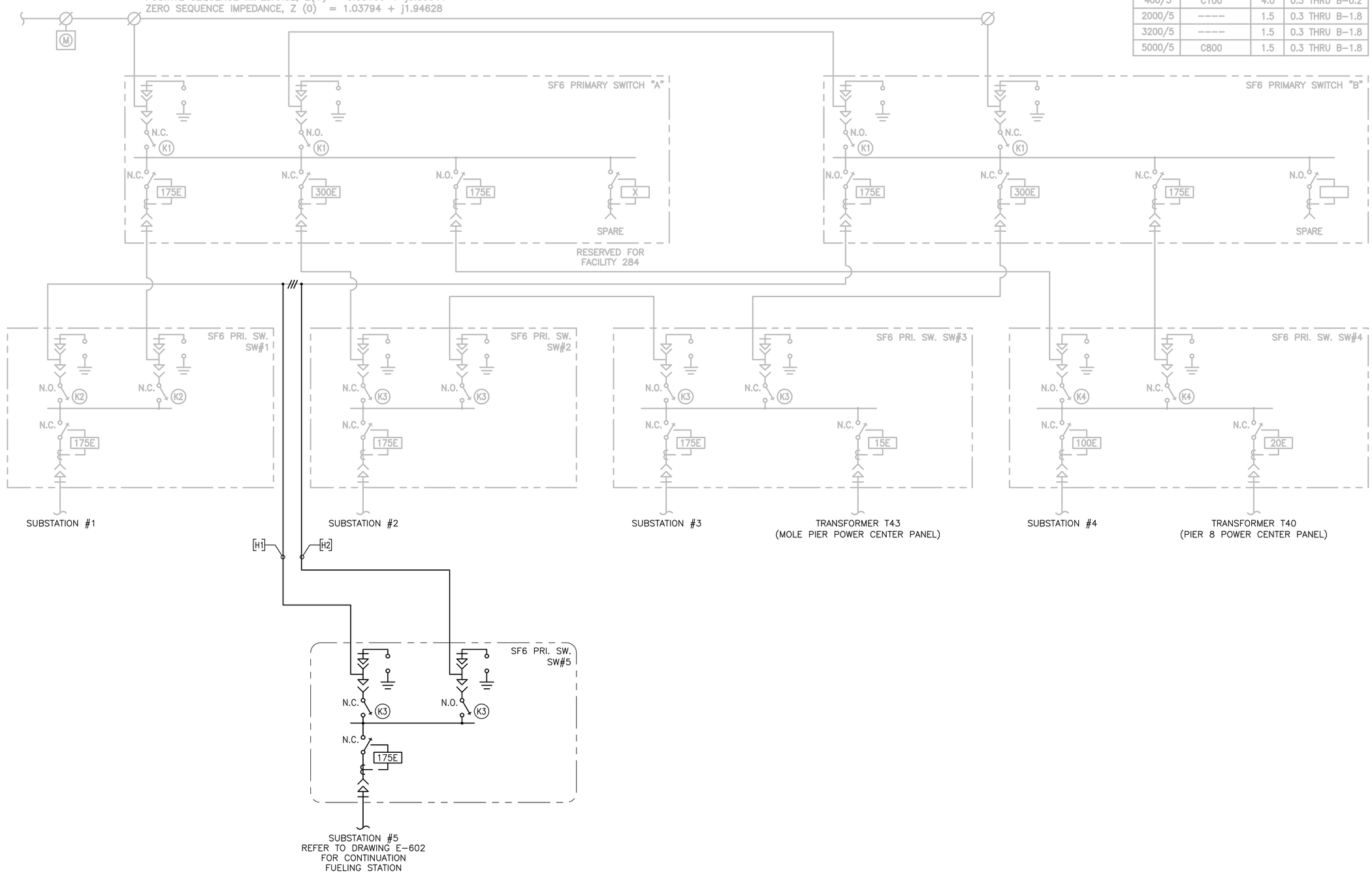


| NO. | DATE | REVISION | BY | APVD |
|---|---|---|---|---|
| | | | | |

DSGN JC LONG | DR AP GIRAITIS | CHK JC LONG | APVD JC LONG

JACK BARTON
FL PE No. 42467

©CH2M HILL 2012. ALL RIGHTS RESERVED.

3001 PGA BLVD. SUITE 300
PALM BEACH GARDENS, FL 33410
EB0000072 AAC001992

NAVY MOLE FUEL STAT. / FLOATING DOCK IMPR.
KEY WEST, FLORIDA
NAVAL FACILITIES ENGINEERING COMMAND
SOUTH DIVISION - CHARLSTON, SOUTH CAROLINA

ELECTRICAL
ONE LINE DIAGRAM
SUBSTATION #4

REUSE OF DOCUMENTS: THIS DOCUMENT, AND THE IDEAS AND DESIGNS INCORPORATED HEREIN, AS AN INSTRUMENT OF PROFESSIONAL SERVICE, IS THE PROPERTY OF CH2M HILL AND IS NOT TO BE USED, IN WHOLE OR IN PART, FOR ANY OTHER PROJECT WITHOUT THE WRITTEN AUTHORIZATION OF CH2MHILL.

VERIFY SCALE
BAR IS ONE INCH ON ORIGINAL DRAWING
0 1"

| | |
|---|---|
| DATE | JANUARY 25, 2012 |
| PROJ | 460764 |
| DWG | E-601 |
| SHEET | 18 OF 19 |

FINAL DRAWINGS

FILENAME: E-601_460764.dwg PLOT DATE: Jan31, 2013 PLOT TIME: 7:17pm

PANELBOARD SCHEDULE
PANEL L5

| BUS VOLTAMPS LIGHTS | RECEPT | EQUIP | MOTORS | LOAD | CIRCUIT BREAKERS AMPS/ POLES | BUS | | | AMPS/ POLES | LOAD | BUS VOLTAMPS LIGHTS | RECEPT | EQUIP | MTRS |
|---|---|---|---|---|---|---|---|---|---|---|---|---|---|---|
| | | | 1500 | Fuel Pump | 20/1 | 1 | A | 2 | 30/3 | TVSS | | | | |
| | | 300 | | Shunt Trip | 20/1 | 3 | B | 4 | - | --- | | | | |
| 1000 | | | | Site Lighting | 20/1 | 5 | C | 6 | - | --- | | | | |
| | 1500 | | | Convenience Rcpt | 20/1 | 7 | A | 8 | 20/3 | Phase Monitor Relay | | | 25 | |
| | | | | Spare | 20/1 | 9 | B | 10 | - | --- | | | 25 | |
| | | | | Spare | 20/1 | 11 | C | 12 | - | --- | | | 25 | |
| | | | | Spare | 20/1 | 13 | A | 14 | 20/1 | PM Beacon Light | 75 | | | |
| | | | | Spare | 20/1 | 15 | B | 16 | 20/1 | Space | | | | |
| | | | | Space | 20/1 | 17 | C | 18 | 20/1 | | | | | |
| | | | | Space | 20/1 | 19 | A | 20 | 20/1 | | | | | |

| | | | |
|---|---|---|---|
| TOTAL VOLTAMPS: | LIGHTING | 1075 | CONNECTED KVA: 4.45 |
| | RECEPTACLES | 1500 | |
| | EQUIPMENT | 375 | LARGEST MOTOR 1500 |
| | MOTORS | 1500 | 25% OF LARGEST MOTO 375 |

RATED VOLTAGE:208/120Y, 3PH — PANEL CAPACITY: 42 POLES
FULL NEUTRAL BUS; GROUND BUS; COPPER BUS BARS; BOLT IN BREAKERS
HINGED DOOR WITH LOCKING HANDLE; NEMA 4X SURFACE MOUNTED ENCLOSURE
MAIN CKT BKR: 100 AMPS — CIRCUIT BREAKERS SHALL BE SHORT CIRCUIT RATED
MAIN RATED FOR 100 AMPS — FOR 10000 AMPS SYMMETRICAL

| | | | | | |
|---|---|---|---|---|---|
| DEMAND LOAD LIGHTING | 1075 | X | 1.25 | 1343.75 | VOLTAMPS |
| DEMAND LOAD RECEPTACLES | 1500 | X | PER NEC | 1500 | VOLTAMPS |
| DEMAND LOAD EQUIPMENT | 375 | X | PER NEC | 375 | VOLTAMPS |
| DEMAND LOAD MOTORS | 1500 | X | PER NEC | 1875 | VOLTAMPS |
| TOTAL DEMAND LOAD | | | | 5093.75 | VOLTAMPS |

1/22/2013 L5

## CKT SCHEDULE:

- [H1], [H2] 6"C, 3#350
- [H3] 4"C, 3#1
- [P1] 1"C, 2#10 #10G
- [P2] 1"C, 2#10 #10G
- [P3] 3"C, 4#1
- [P4] 1"C, EMPTY

NOTE:
1. H CKTS ARE RATED FOR 15KV, EPR, 133% INSULATION.
2. P CKTS ARE RATED FOR 600V, CU, THWN/THHN

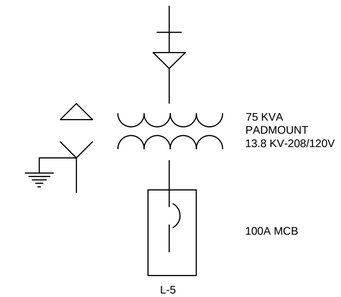


## ONE LINE DIAGRAM
## SUBSTATION #5

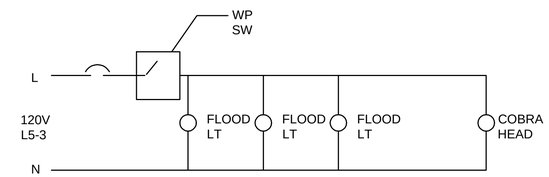


NOTE:
1. FLOOD LIGHTS SHALL BE COOPER VFS K A40-3 LED EI WST AP OR APPROVED EQUAL. CONTRACTOR SHALL PROVIDE NECESSARY HARDWARE TO MOUNT FIXTURE TO EXTENDED GATE POST.

## LIGHTING CONTROL DIAGRAM
NTS

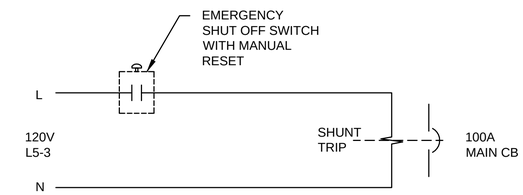


## EMERGENCY SHUT OFF DIAGRAM
NTS

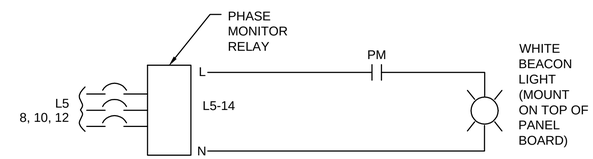


## PHASE MONITOR DIAGRM DIAGRAM
NTS

Know what's below.
Call before you dig.

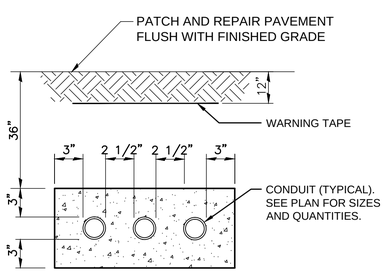


1 TYPICAL THREE DUCT BANK
NTS

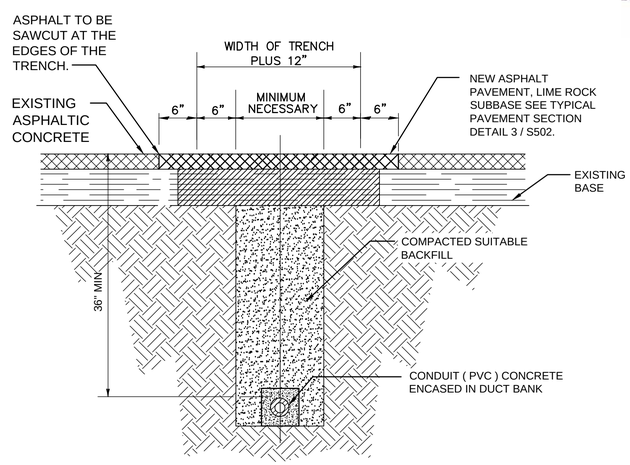


2 FOR USE IN INSTALLING CONDUIT UNDER EXISTING PAVEMENT
NTS

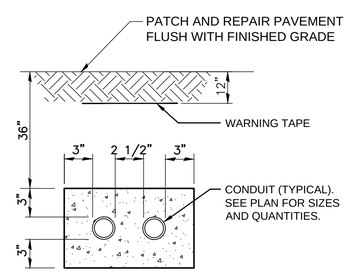


3 TYPICAL TWO DUCT BANK
NTS

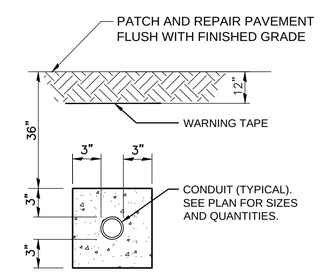


4 TYPICAL SINGLE DUCT BANK
NTS

| NO. | DATE | DSGN | DR | CHK | BY | APVD |
|---|---|---|---|---|---|---|
| | | JC LONG | AP GIRAITIS | JC LONG | JC LONG | APVD |

REVISION

JACK BARTON
FL PE No. 42467

©CH2M HILL 2012. ALL RIGHTS RESERVED.

3001 PGA BLVD. SUITE 300
PALM BEACH GARDENS, FL 33410
EB0000072 · AAC001992

NAVY MOLE FUEL STAT. / FLOATING DOCK IMPR.
KEY WEST, FLORIDA
NAVAL FACILITIES ENGINEERING COMMAND
SOUTH DIVISION - CHARLSTON, SOUTH CAROLINA

REUSE OF DOCUMENTS: THIS DOCUMENT, AND THE IDEAS AND DESIGNS INCORPORATED HEREIN, AS AN INSTRUMENT OF PROFESSIONAL SERVICE, IS THE PROPERTY OF CH2M HILL AND IS NOT TO BE USED, IN WHOLE OR IN PART, FOR ANY OTHER PROJECT WITHOUT THE WRITTEN AUTHORIZATION OF CH2MHILL.

CH2MHILL.

ELECTRICAL
ONE LINE DIAGRAM
SUBSTATION #4

VERIFY SCALE
BAR IS ONE INCH ON ORIGINAL DRAWING.
0 1"

| | |
|---|---|
| DATE | JANUARY 25, 2012 |
| PROJ | 460764 |
| DWG | E-602 |
| SHEET | 19 OF 19 |

FINAL DRAWINGS