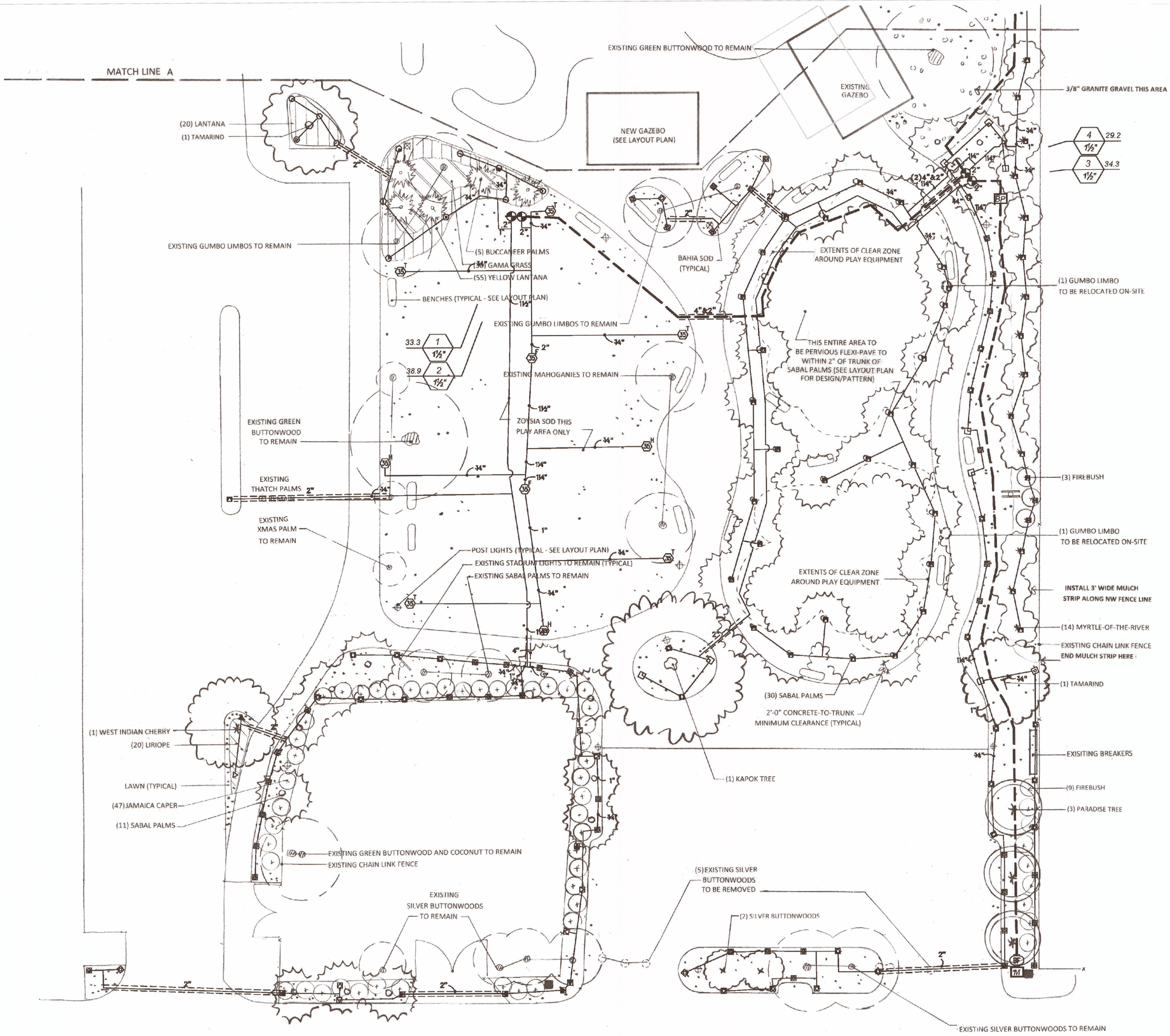

01 / I1.2.1

IRRIGATION PLAN - ZONE A

SCALE: 1"=10'-0"

ARCHITECT:

mbi | k2m
ARCHITECTURE, INC.

Architecture, Interior Design, Procurement, Owner Representation, Specialty Consulting

1001 Whitehead Street
Key West, Florida 33040
Tel: 305.292.7722
Fax: 305.292.2162
Email: info\kw@mbi-k2m.com
www.mbi-k2m.com
PROF. REG. AA26001059

Building Relationships Based on Trust and Results

Cleveland | Key West | Charlotte
Southwest Florida | Washington DC

Seal:

Consultants:

CIVIL ENGINEER:
Meridian Engineering, LLC

LANDSCAPE ARCHITECT:
Craig Reynolds, RLA

Submissions:

- July 28, 2011 - Public Meeting #1
- August 18, 2011 - Public Meeting #2
- September 30, 2011 - HARC, Tree Commission, DRC and Planning
- January 4, 2012 - TIF Application
- January 18, 2012 - Revised Planning Board Submission
- January 27, 2012 - Revised Planning Board Submission
- June 5, 2012 - City Review Submission
- July 25, 2012 - City Review Submission
- August 17, 2012 - 100% Construction Documents

NELSON ENGLISH / WILLIE WARD PARK ENHANCEMENT PROJECT

CITY OF KEY WEST
300 Catherine Street, Key West, Florida 33040

PLOTTED: 8/20/2012 9:09 AM

Drawing Size	Project #:
24x36	MK-11035
Drawn By: AAG	Checked By: ADS

Title:
IRRIGATION PLAN ZONE A

Sheet Number:
I1.2.1

Date: August 17, 2012

©2012 by mbi | k2m Architecture, Inc.

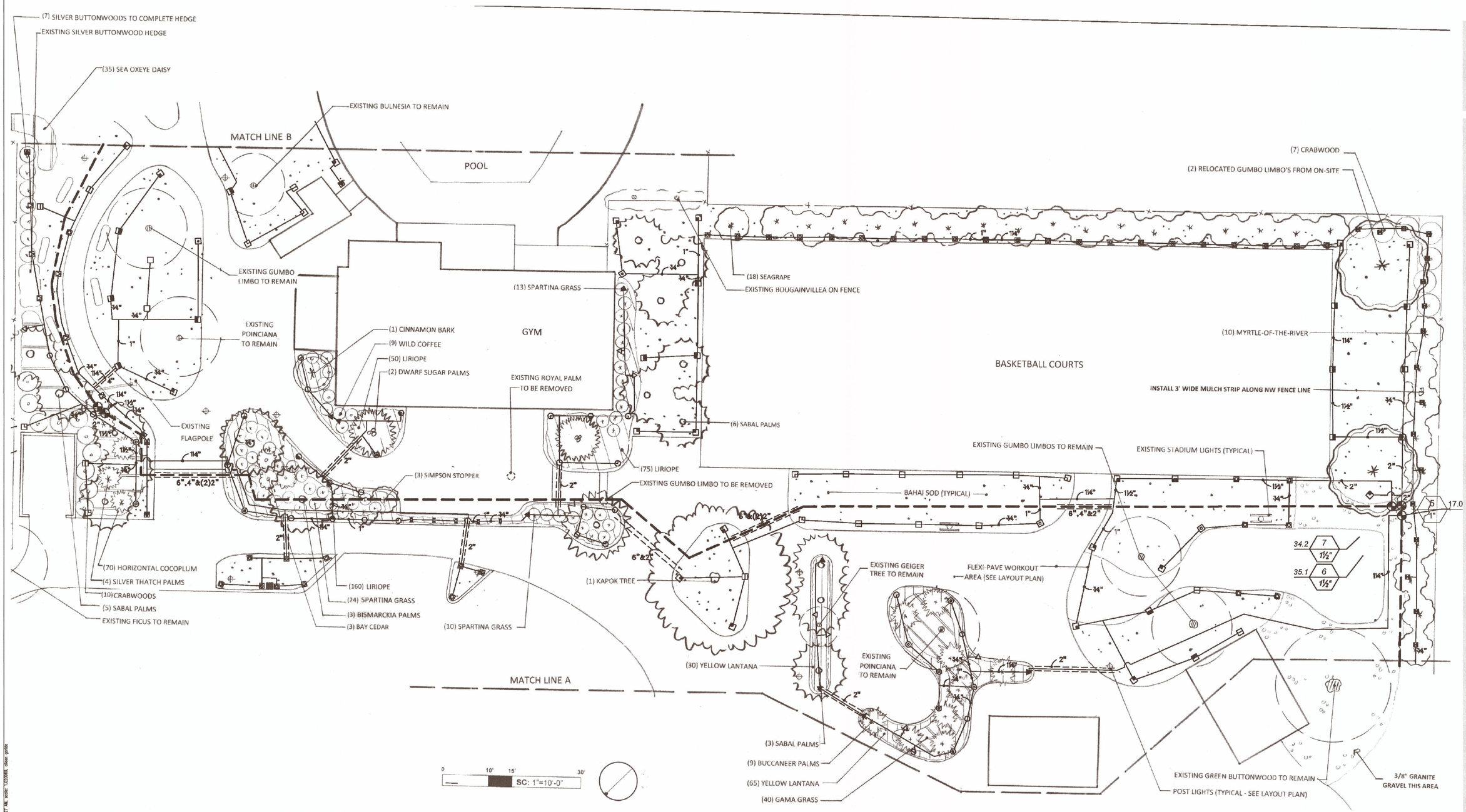

01
11.2.2

IRRIGATION PLAN - ZONE B

SCALE: 1"=10'-0"

GRAPHIC SCALE: 1" = 10'-0"

ARCHITECT:

mbi | k2m
ARCHITECTURE, INC.

Architecture, Interior Design, Procurement, Owner Representation, Specialty Consulting

1001 Whitehead Street
Key West, Florida 33040
Tel: 305.292.7722
Fax: 305.292.2162
Email: infokw@mbi-k2m.com
www.mbi-k2m.com
PROF. REG. AA26001059

Building Relationships
Based on Trust and Results

Cleveland | Key West | Charlotte
Southwest Florida | Washington DC

Seal:

Consultants:

CIVIL ENGINEER:
Meridian Engineering, LLC

LANDSCAPE ARCHITECT:
Craig Reynolds, RLA

Submissions:

- July 26, 2011 - Public Meeting #1
- August 18, 2011 - Public Meeting #2
- September 30, 2011 - HARC, Tree Commission, DRC and Planning
- January 4, 2012 - TIF Application
- January 18, 2012 - Revised Planning Board Submission
- January 27, 2012 - Revised Planning Board Submission
- June 5, 2012 - City Review Submission
- July 25, 2012 - City Review Submission
- August 17, 2012 - 100% Construction Documents

NELSON ENGLISH / WILLIE WARD
PARK ENHANCEMENT PROJECT

CITY OF KEY WEST
300 Catherine Street, Key West, Florida 33040

PLOTTED: 8/20/2012 9:27 AM

Drawing Size	Project #:
24x36	MK-11035
Drawn By: AAG	Checked By: ADS

Title:
IRRIGATION PLAN
ZONE B

Sheet Number:
I1.2.2

Date: August 17, 2012

©2012 by mbi | k2m Architecture, Inc.

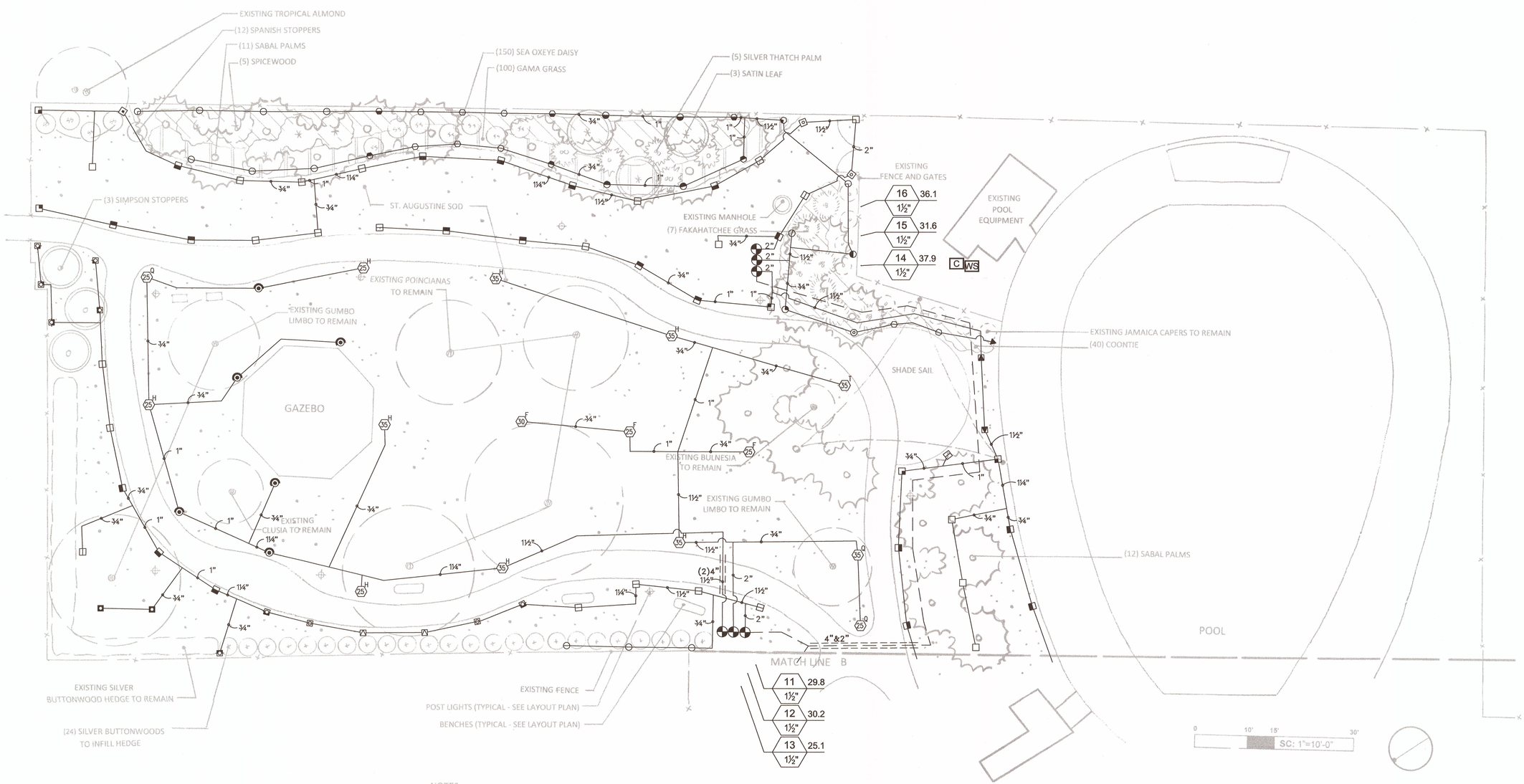

NOTES:

1. REPLACE ST. AUGUSTINE SOD AS NEEDED THIS ENTIRE AREA - USE 1" MIN. SILICA SAND AND AERATE EXISTING SOIL
2. TRIM ALL TREES ACCORDING TO ASCA GUIDELINES TO ALLOW PROPER SUNLIGHT TO UNDERSTORY

01 / I1.2.3

IRRIGATION PLAN - ZONE C

SCALE: 1"=10'-0"

GRAPHIC SCALE: 1" = 10'-0"

ARCHITECT:

mbi | k2m ARCHITECTURE, INC.

Architecture, Interior Design, Procurement, Owner Representation, Specialty Consulting

1001 Whitehead Street
Key West, Florida 33040
Tel: 305.292.7722
Fax: 305.292.2162
Email: infokw@mbi-k2m.com
www.mbi-k2m.com
PROF. REG. AA26001059

Building Relationships Based on Trust and Results

Cleveland | Key West | Charlotte
Southwest Florida | Washington DC

Seal:

Consultants:

CIVIL ENGINEER:
Meridian Engineering, LLC

LANDSCAPE ARCHITECT:
Craig Reynolds, RLA

Submissions:

- July 28, 2011 - Public Meeting #1
- August 18, 2011 - Public Meeting #2
- September 30, 2011 - HARC, Tree Commission, DRC and Planning
- January 4, 2012 - TIF Application
- January 18, 2012 - Revised Planning Board Submission
- January 27, 2012 - Revised Planning Board Submission
- June 5, 2012 - City Review Submission
- July 25, 2012 - City Review Submission
- August 17, 2012 - 100% Construction Documents

NELSON ENGLISH / WILLIE WARD PARK ENHANCEMENT PROJECT

CITY OF KEY WEST
300 Catherine Street, Key West, Florida 33040

PLOTTED: 8/20/2012 9:49 AM

Drawing Size	Project #:
24x36	MK-11035
Drawn By: ADS	Checked By: MBI

Title:
IRRIGATION PLAN ZONE C

Sheet Number:
I1.2.3

Date: August 17, 2012

©2012 by mbi | k2m Architecture, Inc.

IRRIGATION_SCHEDULE

SYMBOL	MANUFACTURER/MODEL	ARC	PSI	GPM	RADIUS
	Rain Bird 1806-PRS 15 Strip Series	EST	30	0.61	4'x15'
	Rain Bird 1806-PRS 15 Strip Series	SST	30	1.21	4'x30'
	Rain Bird 1806-PRS 8 Series MPR	180	30	0.52	8'
	Rain Bird 1806-PRS 8 Series MPR	90	30	0.26	8'
	Rain Bird 1806-PRS 10 Series MPR	360	30	1.58	10'
	Rain Bird 1806-PRS 10 Series MPR	180	30	0.79	10'
	Rain Bird 1806-PRS 10 Series MPR	90	30	0.39	10'
	Rain Bird 1806-PRS 12 Series MPR	360	30	2.60	12'
	Rain Bird 1806-PRS 12 Series MPR	180	30	1.30	12'
	Rain Bird 1806-PRS 12 Series MPR	90	30	0.65	12'
	Rain Bird 1806-PRS 15 Series MPR	180	30	1.85	15'
	Rain Bird 1806-PRS 15 Series MPR	90	30	0.92	15'
	Rain Bird 1806-PRS 8 Series VAN	Adj	30		8'
	Rain Bird 1806-PRS 10 Series VAN	Adj	30		10'
	Rain Bird 1806-PRS 12 Series VAN	Adj	30		12'
	Rain Bird 1806-PRS 15 Series VAN	Adj	30		15'
	Rain Bird 1812-PRS 15 Strip Series	EST	30	0.61	4'x15'
	Rain Bird 1812-PRS 15 Strip Series	SST	30	1.21	4'x30'
	Rain Bird 1812-PRS 8 Series MPR	180	30	0.52	8'
	Rain Bird 1812-PRS 8 Series MPR	90	30	0.26	8'
	Rain Bird 1812-PRS 10 Series MPR	180	30	0.79	10'
	Rain Bird 1812-PRS 10 Series MPR	90	30	0.39	10'
	Rain Bird 1812-PRS 12 Series MPR	180	30	1.30	12'
	Rain Bird 1812-PRS 12 Series MPR	90	30	0.65	12'
	Rain Bird 1812-PRS 15 Series MPR	180	30	1.85	15'
	Rain Bird 1812-PRS 15 Series MPR	90	30	0.92	15'
	Rain Bird 1812-PRS 8 Series VAN	Adj	30		8'
	Rain Bird 1812-PRS 10 Series VAN	Adj	30		10'
	Rain Bird 1812-PRS 12 Series VAN	Adj	30		12'
	Rain Bird 1812-PRS 15 Series VAN	Adj	30		15'
	Rain Bird 1812-PRS 15 Strip Series	EST	30	0.61	4'x15'
	Rain Bird 1806-PRS-R17-24	180	30	1.50	21'
	Rain Bird 1806-PRS-R17-24	240	30	2.00	21'
	Rain Bird 1804-PRS 5 Series Stream	180	30	0.50	1'x10'
	Rain Bird 1806-PRS w/Maxijet ARCUHFU09H	90	30	0.10	1'
	Rain Bird 1806-PRS w/Maxijet ARCRHFR09H	90	30	0.40	1'

SYMBOL	MANUFACTURER/MODEL/DESCRIPTION	PSI	GPM	RADIUS
25 ARC	Rain Bird 5004-MPR	45		25'
30 ARC	Rain Bird 5004-MPR	45		30'
35 ARC	Rain Bird 5004-MPR	45		35'

SYMBOL	MANUFACTURER/MODEL/DESCRIPTION
	Rain Bird PGA in 12" Valve Box
BF	Wilkins 975XL 1" Backflow Preventer
M	Water Meter 1-1/2" to produce 40 gpm @ 50psi
BP	Booster Pump see notes
C	Irritrol TC-18-EXT 18 Station Controller
WS	Irritrol Weather Logic Weather Sensor
	Irrigation Lateral Line: PVC Class 160
	Irrigation Mainline: PVC 2-1/2" Schedule 40
	Pipe Sleeve: PVC Schedule 40 Extend sleeves 18 inches beyond edges of paving or construction.

IRRIGATION CONTRACTOR RESPONSIBLE FOR THEIR OWN TAKE OFF

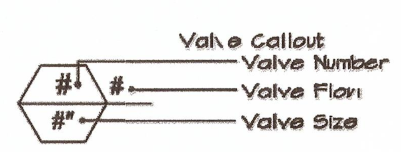

Crawford Irrigation Design, Inc.
IRRIGATION DESIGN AND CONSULTATION SERVICES
Edgewater, Florida
Tel: (386) 424-0027
EMAIL: CID@Atlantic.net
Fax: (866) 654-2902
IRRIGATION ASSOCIATION CERTFIED IRRIGATION DESIGNER AND AUDITOR: 003419

01 / I1.2.3

IRRIGATION PLAN - ZONE C

SCALE: 1"=10'-0"

UNDERGROUND IRRIGATION SPECIFICATIONS

1.0 GENERAL

1.1 SUMMARY: Includes but not limited to:
A. Furnishing and installing sprinkler system as described in Contract Documents complete with accessories necessary for proper functioning.

1.2 SYSTEM DESCRIPTION:
A. Design Requirements:
1. Layout of Irrigation Heads:
a. Location of heads shown on Drawings is approximate. Actual placement may vary slightly as is required to achieve full, even coverage without spraying onto buildings, sidewalks, fences, etc.
b. During layout, consult with Landscape Architect to verify proper placement and make recommendations, where revisions are advisable.

1.3 QUALITY ASSURANCE:
A. Regulatory Requirements:
1. Work and materials shall be in accordance with latest rules and regulations, and other applicable state or local laws. Nothing in Contract Documents is to be construed to permit work not conforming to these codes.
B. Pre-Installation Conference:
1. Meet with Owner and Landscape Architect to discuss and clarify all aspects of job requirements prior to commencing work of this Section.
C. System Adjustments:
1. Minor adjustments in system will be permitted to avoid existing fixed obstructions.
2. Mainline, laterals, and valves are shown for clarity purposes only. All irrigation equipment to be with landscape area. Mainline, laterals and valves to be installed as far away from existing and new specimen trees as possible.
D. 1. Documentation and submittal of actual water supply performance prior to commencing installation.

1.4 SUBMITTALS:
A. Record Drawings:
1. Prepare an accurate as-built drawing as installation proceeds to be submitted prior to final inspection. Drawing shall include:
a. Detail and dimension changes made during construction.
b. Significant details and dimensions not shown in original Bidding Documents.
2. Maintain, at job site, one copy of Contract Documents (as defined in General Conditions) and relevant shop drawings.
3. Clearly mark each document "PROJECT RECORD COPY" and maintain in good condition for use of the Landscape Architect and Owner.
4. As-built drawing shall be clearly drawn on reproducible mylar.
5. Submit product literature for all sprinklers, valves, pipe, wire, wire connectors and controller.
6. Final payment for system will not be authorized until accurate and complete submittals are delivered to the Landscape Architect.
B. Instruction Manual:
1. Provide instruction manual which lists complete instructions for system operation and maintenance.

1.5 PRODUCT STORAGE:
A. During construction and storage, protect materials from damage and prolonged exposure to sunlight.

1.6 WARRANTY:
A. Standard one (1) year warranty stipulated in General Conditions shall include:
1. Completed system including parts and labor.
2. Filling and repairing depressions and replacing plantings due to settlement of irrigation trenches for one (1) year following final acceptance.
3. System adjustment to supply proper coverage to areas to receive water.

1.7 MAINTENANCE:
A. Extra Materials:
1. In addition to installed system, furnish Owner with the following items at close-out:
a. Two sprinkler head bodies of each size and type.
b. Two nozzles for each size and type.
c. Two adjusting keys for each sprinkler head cover type.

2.0 PRODUCTS:

2.1 PIPE, PIPE FITTINGS, AND CONNECTIONS:
A. Pipe shall be continuously and permanently marked with Manufacturer's name, size, schedule, type, and working pressure.
B. Pipe:
1. Pressure Lines: as indicated on plans.
2. Lateral Lines: as indicated on plans.
3. Risers: sch. 80 PVC, gray
C. Fittings:
1. Schedule 40 PVC.
D. Sleeving:
1. Schedule 40 PVC.

2.2 SPRINKLER HEADS:
A. Conform to requirements shown on Drawings as to type, radius of throw, pressure, and discharge.
B. Install sprinkler heads with Rainbird SA swing assemblies.

2.3 AUTOMATIC SPRINKLER SYSTEM:
A. Control valves shall be of size and type indicated on Drawings.
B. Control wire shall be UL listed, color coded copper conductor direct burial size 14. Tape control wire to bottom of main line every ten (10') feet. Use 3M-DBY waterproof wire connectors at splices and locate all splices within valve boxes. Use white or gray color for common wire and other colors for all other wire. Each common wire may serve only one controller.
C. Add one extra control wire from panel to valves for use if a wire fails and mark it in the control box as an extra wire. This wire shall be of a different color than the others.

2.4 VALVES:
A. Electric Valves:
1. Make and model shown on Drawings.
B. Gate valves:
1. Bronze construction, angle type, 150 pound class, threaded connections, with cross-type operating handle designed to receive operating key.
C. Automatic Controller:
1. Make and model shown on Drawings.
D. Backflow Preventor:
1. Make and model shown on Drawings.

2.5 VALVE ACCESSORIES:
A. Valve Boxes:
1. Ametek or Brooks rectangular heavy duty valve box with locking lid or Landscape Architect approved equal.
2. Do not install more than one (1) valve in a single box.
3. Valve boxes shall be large enough for easy removal or maintenance of valves.

3.0 EXECUTION:

3.1 PREPARATION:
A. Protection:
1. Work of others damaged by this Section during course of its work shall be replaced or repaired by original installer at this Section's expense.

3.2 INSTALLATION:
A. Trenching and Backfilling:
1. Over-excavate trenches by two (2") inches and bring back to indicated depth by filling with fine, rock-free soil or sand.
2. Cover pipe both top and sides with two (2") inches of material specified in paragraph above. In no case shall there be less than two (2") inches of rock-free soil or sand surrounding pipe.
B. Installation of Plastic Pipe:
1. Install plastic pipe in a manner to provide for expansion and contraction as recommended by Manufacturer.
2. Unless otherwise indicated on Drawings, install main lines with a minimum cover of eighteen (18") inches based on finish grade. Install lateral lines with a minimum cover of twelve (12") inches based on finish grade.
3. Install pipe and wires under driveways or parking areas in specified sleeves a minimum of eighteen (18") inches below finish grade or as shown on Drawings.
4. Locate no sprinkler head closer than twelve (12") inches from building foundation. Heads immediately adjacent to mowing strips, walks or curbs shall be one (1") inch below top of mowing strip, walk or curb and have a minimum of one (1") inch clearance between head and mowing strip, walk or curb.
5. Drawings show arrangement of piping. Should local conditions necessitate rearrangement, obtain approval of Landscape Architect prior to proceeding with work.
6. Cut plastic pipe square. Remove burrs at cut ends prior to installation so unobstructed flow will result.
7. Make solvent weld joints in the following manner:
a. Clean mating pipe and fitting with clean, dry cloth and apply one (1) coat of P-70 primer to each.
b. Apply uniform coat of 711 solvent to outside of pipe.
c. Apply solvent to fitting in similar manner.
d. Reapply a light coat of solvent to pipe and quickly insert into fitting.
e. Give pipe or fitting a quarter turn to insure even distribution of solvent and make sure pipe is inserted to full depth of fitting socket.
f. Hold in position for fifteen (15) seconds minimum or long enough to secure joint.
g. Wipe off solvent appearing on outer shoulder of fitting.
h. Do not use an excessive amount of solvent thereby causing an obstruction to form on the inside of pipe.
i. Allow joints to set at least 24 hours before applying pressure to PVC pipe.
8. Tape threaded connection with teflon tape.
9. Install concrete thrust blocks wherever change of direction occurs a PVC main pressure lines unless otherwise detailed on Drawings.
C. Control Valves and Controller:
1. Install controller, control wires, and valves in accordance with Manufacturer's recommendations and according to applicable electrical code.
2. Install valves in plastic boxes with reinforced heavy duty plastic covers. Locate valve box tops at finish grade.
3. Install remote control valves in valve boxes positioned over valve so all parts of valve can be reached for service. Set cover of valve box even with finish grade.
4. Install all valve boxes over nine (9") inches of gravel for drainage.
D. Sprinkler Heads:
1. Prior to the installation of sprinkler heads, open control valves and use full head of water to flush out system.
2. Set sprinkler heads perpendicular to finish grade.
3. Set lawn sprinkler heads adjacent to existing walks, curbs, and other paved areas to grade.

3.3 ADJUSTMENT AND CLEANING:
A. Adjust heads to proper grade when turf is sufficiently established to allow walking on it without appreciable harm. Such lowering or raising of of heads shall be part of the original contract with no additional charge to the Owner.
B. Adjust sprinkler heads for proper distribution and trim to ensure spray does not fall on building.
C. Adjust watering time of valves to provide proper amounts of water to all plants.

3.4 DEMONSTRATION:
A. After system is installed and approved, instruct Owners Representative in complete operation and maintenance.

END OF SECTION

BOOSTER PUMP NOTES

The water source shall be water meter with booster pump. Irrigation contractor responsible for supplying booster pump as part of the irrigation contract. The system shall include all labor, equipment, materials for the pump/motor, control box, pressure tank, pressure gauge valves, plumbing fitting, etc. to provide a complete and properly operating system meeting the following performance requirements and provisions:

a. Provide Starite DS2HF or approved equal pump to produce 40 gpm min @ 80 TDH
b. Include Cycle Stop CSV3b 2" 50 PSI and pressure tank
c. Provide complete submittals for approval prior to commencing work
d. Warranty all work for 1 year minimum
d. Electrical connection by licensed electrical contractor

PRODUCT NOTES

IRRIGATION CONTRACTOR TO PROVIDE SUBMITTALS FOR APPROVAL TO CITY OF KEY WEST COMMUNITY SERVICES DEPARTMENT PRIOR TO INSTALLATION. LOCATION OF CONTROLLER AND BOOSTER PUMP TO BE DETERMINED BY CITY OF KEY WEST COMMUNITY SERVICES DEPARTMENT.

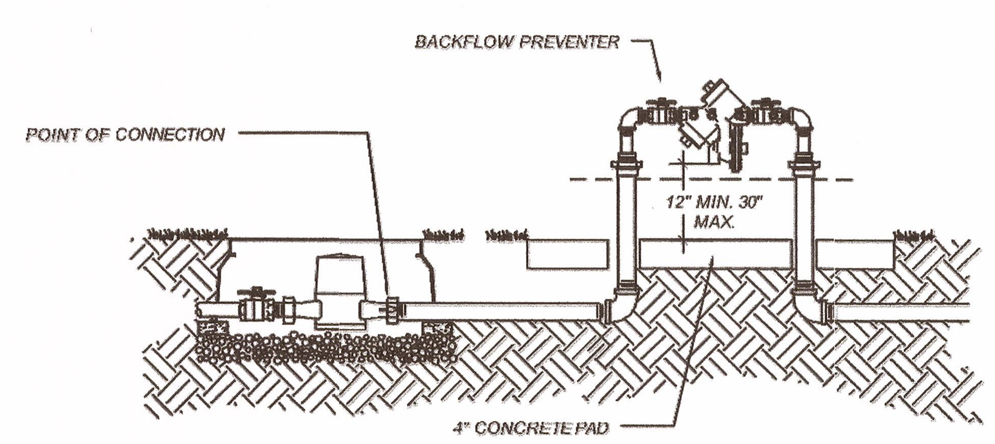

IRRIGATION SYSTEM CONNECTION DETAIL

SCALE: NTS

PROVIDE MEASUREMENTS FROM 2 REFERENCE POINTS TO STUB UP ON THE AS-BUILD DRAWING

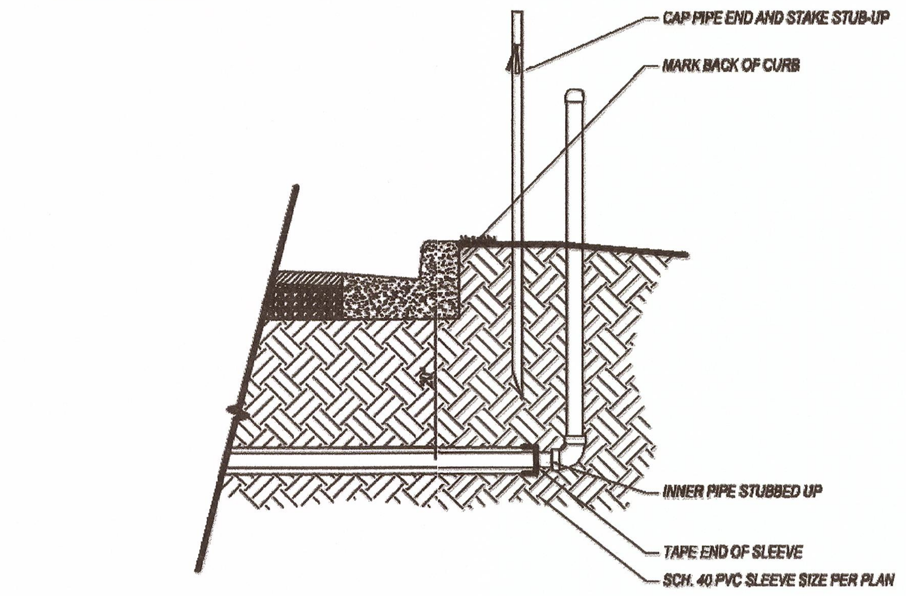

SLEEVING ROUGH-IN DETAIL

SCALE: NTS

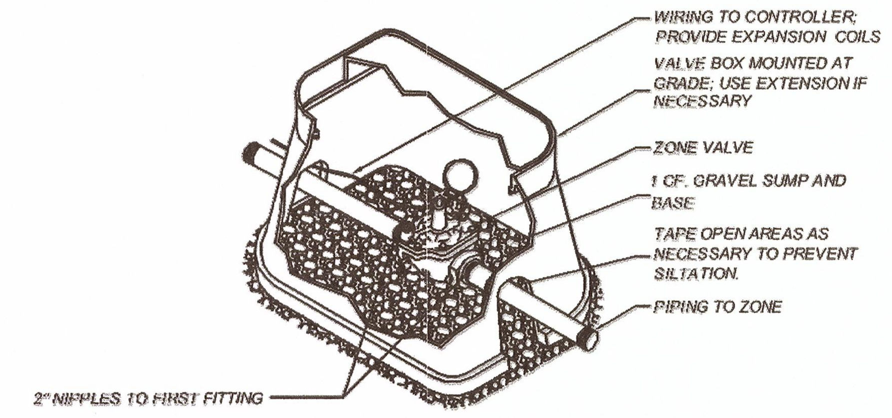

INSTALL TOP OF VALVE A MAXIMUM OF 15" FROM FINISHED GRADE.
INSTALL REDUCERS AND ALL-THREAD AS NECESSARY AT EACH VALVE LOCATION.
INSTALL EACH VALVE TAP IN A VERTICAL ORIENTATION TO ASSURE THE PROPER VALVE DEPTH.

ZONE VALVE INSTALLATION DETAIL

SCALE: NTS

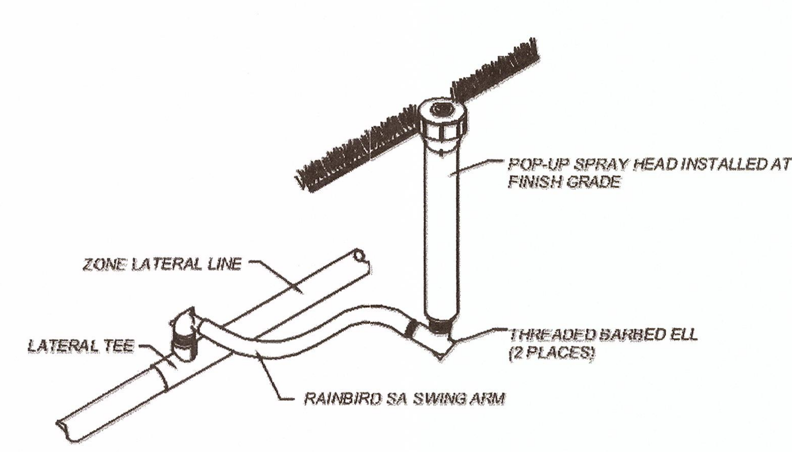

SPRAY HEAD INSTALLATION DETAIL

SCALE: NTS

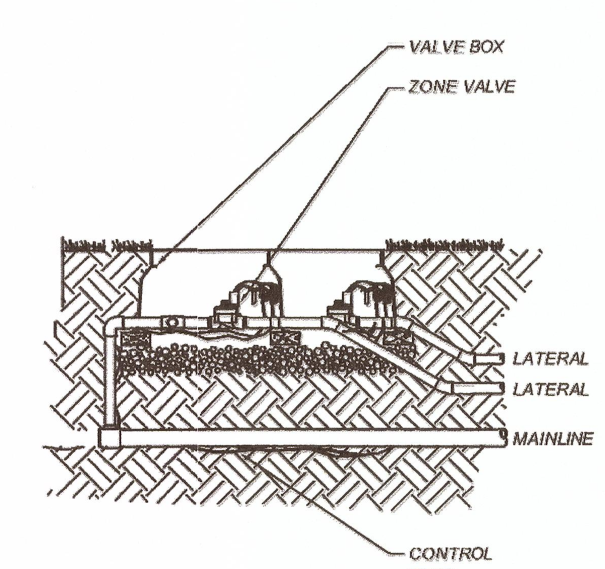

0 10 20 30
GRAPHIC SCALE: 1" = 10'-0"

ARCHITECT:
mbi | k2m ARCHITECTURE, INC.
Architecture, Interior Design, Procurement, Owner Representation, Specialty Consulting
1001 Whitehead Street
Key West, Florida 33040
Tel: 305.292.7722
Fax: 305.292.2162
Email: infokw@mbi-k2m.com
www.mbi-k2m.com
PROF. REG. AA26001059
Building Relationships Based on Trust and Results
Cleveland | Key West | Charlotte
Southwest Florida | Washington DC

Seal:

Consultants:
CIVIL ENGINEER:
Meridian Engineering, LLC
LANDSCAPE ARCHITECT:
Craig Reynolds, RLA

Submissions:
July 28, 2011 - Public Meeting #1
August 18, 2011 - Public Meeting #2
September 30, 2011 - HARC, Tree Commission, DRC and Planning
January 4, 2012 - TIF Application
January 18, 2012 - Revised Planning Board Submission
January 27, 2012 - Revised Planning Board Submission
June 5, 2012 - City Review Submission
July 25, 2012 - City Review Submission
August 17, 2012 - 100% Construction Documents

NELSON ENGLISH / WILLIE WARD PARK ENHANCEMENT PROJECT
CITY OF KEY WEST
300 Catherine Street, Key West, Florida 33040

PLOTTED: 8/20/2012 10:18 AM

Drawing Size 24x36	Project #: MK-11035
Drawn By: ADS	Checked By: MBI

Title:
IRRIGATION LEGENDS AND SPECIFICATIONS

Sheet Number:
I1.2.4

Date: August 17, 2012

©2012 by mbi | k2m Architecture, Inc.

K:\Jobs\2011\MK-11035 – City of KW – Park Enhancement\Drawings\Arch\I24.dwg, 8/20/2012 10:18 AM, scale: 1'-0" = 1'-0", aileen garido