THE CITY OF KEY WEST
3140 Flagler Ave
Key West, Florida 33040

October 23, 2012

To: All Prospective Respondents

Subject: Request for Qualifications for Architectural Services: Key West City Hall

The City of Key West (CITY) Request for Qualifications (RFQ) No. 13-001: Architectural Services: Key West City Hall contains the following documents.

The Request for Qualifications which is forty-one (41) pages in length plus attachments and contains important information on scope of work, deadlines, required response contents, selection process, and required forms.

Information to Respondents one (1) page in length
Call for Request for Qualifications one (1) page in length
Request for Qualifications ten (10) pages in length
Anti-Kickback Affidavit one (1) page in length
Public Entity Crimes Certification three (3) pages in length
City Ordinance Sec. 2-799 four (4) pages in length
Sample Agreement twenty-one (21) pages in length
Attachment A: Site Photo and Site Diagram
Attachment B: Property Condition Assessment

Please review your package to ensure it contains all of these documents. If not, contact Sue Snider, City of Key West Purchasing Agent at (305) 809-3815, immediately, to obtain copies of any missing document(s).

Firms/corporations submitting a response should ensure that the following documents are completed, certified, notarized and returned as instructed.

INFORMATION TO RESPONDENTS

SUBJECT:	RFQ #13-001: ARCHITECTURAL SERVICES: KEY WEST CITY HALL
ISSUE DATE:	OCTOBER 23, 2012
PRE RESPONSE CONFERENCE:	MANDATORY: EITHER NOVEMBER 14, 2012 OR NOVEMBER 27, 2012, 4:30 PM AT THE GLYNN ARCHER SCHOOL, 1302 WHITE STREET, KEY WEST, FL 33040
MAIL OR SPECIAL DELIVERY REPONSES TO:	CITY CLERK CITY OF KEY WEST 3126 FLAGLER AVE KEY WEST, FL 33040
DELIVER RFQS TO:	SAME AS ABOVE
RESPONSES MUST BE RECEIVED:	DECEMBER 12, 2012
NOT LATER THAN:	3:00 P.M.

SUE SNIDER
PURCHASING AGENT
CITY OF KEY WEST

ses

Enclosures

REQUEST FOR QUALIFICATIONS
FOR ARCHITECTURAL SERVICES: KEY WEST CITY HALL

NOTICE is hereby given to prospective Respondents that the City of Key West (CITY) is seeking RFQ No 13-001: Architectural Services: Key West City Hall: The Clerk of the City of Key West, Florida at 3126 Flagler Ave, Key West, Florida 33040 will receive Request for Qualifications until 3:00 P.M. local time on December 12, 2012. Late responses will not be considered. RFQ DOCUMENTS may be obtained from DemandStar by Onvia at www.demandstar.com/supplier or call toll-free 1-800-711-1712. Applicants shall submit one response marked "Original", one copy marked "Copy", and 2 CD-ROM or flash drives, each shall contain one PDF file each of the full response enclosed in two (2) sealed envelopes, one within the other clearly marked on the outside: RFQ No. 13-001: Architectural Services: Key West City Hall addressed and delivered to:

CITY CLERK
CITY OF KEY WEST, FLORIDA
3126 FLAGLER AVE
KEY WEST, FLORIDA 33040

Respondents will be required to attend one (1) of the two (2) mandatory pre-submission meetings at Glynn Archer School, 1302 White Street, Key West, FL 33040 in order to submit a response to this RFQ (November 14 or 27, 2012 at 4:30 PM).

Prior to award by the CITY the successful Respondent must be able to prove that Respondent held State Licenses prior to submittal of response as would be required to perform work herein. Within 10-days after issuance of the Notice of Award, the successful Respondent must be able to prove that Respondent holds City Licenses as would be required to perform work herein. Any permit and/or license requirement and subsequent costs are located within the RFQ document. The successful Respondent must also be able to satisfy the City Attorney as to such insurance coverage, and legal requirements as may be demanded in the RFQ. The CITY may reject responses: (1) for budgetary reasons, (2) if the Respondent misstates or conceals a material fact in its response, (3) if the Respondent does not strictly conform to the law or is non-responsive to RFQ requirements, (4) if the response is conditional, (5) if a change of circumstances occurs making the purpose of the RFQ unnecessary or (6) if such rejection is in the best interest of the CITY. The CITY may also waive any minor informalities or irregularities in any response.

REQUEST FOR QUALIFICATIONS
ARCHITECTURAL SERVICES: KEY WEST CITY HALL

The City of Key West requires the services of a qualified firm to provide Architectural Services for the design of Key West City Hall at the current Glynn Archer School site and within the current structure. The services may include but are not limited to planning services, design services, permitting assistance, bid and proposal development services, and services during construction. The City intends to retain one qualified firm to provide the services. The selected firm will be required to abide by all applicable federal, state and local laws and ordinances.

Responses shall include a minimum the following services by the Firm or its subconsultants:

Lead Firm:	Architect		
Subconsultants:	Landscape Architect	Structural Engineer	Surveyor
	Mechanical Engineer	Civil Engineer	Interior Design
	Cost Estimator		
	Environmental Remediation Specialist for asbestos/lead paint removal		

The requested architectural services focus on the adaptive reuse of the approximately 38,000 square feet Historic Glyn Archer School for the new Key West City Hall by conversion of the entire interior to the new use. The existing facades of the buildings A and B, as well as the auditorium as illustrated in the attached photos and diagram (Attachment A) are to be preserved in situ and incorporated into the renovated building. The exterior existing façade finishes are to be preserved to the maximum extent possible. Only the following discrete items from the existing interior, to wit, two plaster medallions, salvageable portions of the auditorium stage, and three framed large "mural like" paintings, and salvageable existing seating which can be re-used and meet building code standards are to be saved and incorporated in the final design of the building.

A Property Condition Assessment was completed by CH2M Hill and is included as Attachment B. City Commission approved the conversion method for adaptive reuse by Resolution No.12-284.

Any proposal received after the response deadline will not be considered. Upon selection of the most qualified firm and approval by the City commission, the City will negotiate a contract with the selected firm. A Respondent may not withdraw their proposal before the expiration of sixty (60) days from the date of proposal opening. A Respondent may withdraw their proposal after that date only if they provide written notification prior to the approval of selection by the City Commission. The City of Key West reserves the right to reject any or all of the responses submitted.

<u>For questions concerning any aspect of this RFQ please contact:</u>

Mr. Doug Bradshaw
Senior Project Manager
3140 Flagler Ave
Key West, FL 33040
(305) 809-3792
dbradsha@keywestcity.com

QUALIFICATIONS

Respondents must demonstrate expertise and relevant experience in the following areas of architectural design:

- Multi use office, government, and public buildings
- Historic Preservation and Restoration
- Adaptation and conversion of historic office, municipal, educational, or cultural structures to new uses
- Defensible/Safe Space Design
- Ecological and Environmental Design in accordance with section 255.2575(2) Florida Statue (Green Buildings/Construction)
- Cost estimating for conversion of historical structures of similar size and scope

QUALIFICATIONS CRITERIA

The qualification criteria applied to the selections of firms for further consideration are the following:

- Past work experience with emphasis on work that involves rehabilitation, adaptation, and conversion of historic structures to new uses
- Specialized experience and technical competence of the firm in the discipline of architecture and the experience and technical competence of the required subconsultants.
- Professional qualifications of staff personnel. The firm must have a registered Professional Architect on staff and be certified to perform Architectural Services within the State of Florida at the time of RFQ submission.
- Capacity of assigned and identified staff to accomplish work.
- Ability to perform the services expeditiously at the request of the CITY. Location and availability of technical support people and assigned Work manager to the CITY within a reasonable timeframe will be a factor in overall evaluation.
- LEED certified staff professionals

SELECTION PROCESS

The following steps will be followed in the selection process:

1. City of Key West management and staff will review each response that is submitted and determine which ones are considered responsive to the RFQ and will rank the responses in a publicly advertised meeting using the selection criteria matrix attached.
2. The ranking and selection of the firms will be presented to City Commission for approval.
3. Firms will be required to give a presentation to the City Commission at a meeting to be scheduled at a later date. Presentations shall not exceed 10-minutes or of such time as allowed by the Commission.
4. The City Commission reserves the right to accept the recommendation of the evaluation team or approve an alternative ranking and selection.
5. City Commission will authorize the City Manager to negotiate and enter into a contract with the highest ranked firm. If the City Manager is unable to negotiate a satisfactory contract with the highest ranked firm, the City Manager will terminate negotiations and then negotiate with the second highest ranked firm and so on in order of preference if needed.

TIMELINE*

The proposed schedule for selection of the firm is as follows:

• Advertisement of RFQ	October 23, 2012
• Mandatory pre-submission meeting #1	November 14, 2012
or	
• Mandatory pre-submission meeting #2	November 27, 2012
• Responses Due	December 12, 2012
• Staff Review Period	December 13, 2012- January 11, 2013
• Presentations to City Commission/Ranking	February 5, 2012
• Contract Negotiations	February 6-22, 2013
• Contract Approval	March 5, 2012

*Timeline is subject to change

CITY STAFF SELECTION CRITERIA MATRIX

Name: REQUEST FOR QUALIFICATIONS FOR ARCHITECTURAL SERVICES: KEY WEST CITY HALL

Project Number: RFQ 13-001

Firm _____

Date _____

SELECTION CRITERIA	POINTS ALLOWED	POINTS EARNED
Past work experience with emphasis on work that involves rehabilitation, adaptation, and conversion of historic structures to new uses	45	
Specialized experience and technical competence of the firm in the discipline of architecture and the experience and technical competence of the required subconsultants.	20	
Professional qualifications of staff personnel/Capacity of assigned and identified staff to accomplish work.	20	
Ability to perform the services expeditiously at the request of the CITY. Location and availability of technical support people and assigned project manager to the CITY	5	
Cost estimating for conversion of historical structures	5	
LEED certified staff professionals	5	
Total Points	**100**	

SCOPE OF WORK

The services of the Architect firm may consist of but are not limited to:

- Design of a new City Hall within the existing Glynn Archer School structure
- Bid and proposal development services
- Historic preservation, restoration, adaptation and conversion of historic office, municipal, educational, or cultural structures to new uses
- Permitting assistance
- Design of site amenities, landscape, and interior of buildings
- Design of buildings in accordance with section 255.2575(2) Florida Statue (Green Buildings/Construction)
- Conduct public awareness and input strategies
- Preparation of reports, schedules, cost estimates, green construction certifications, maintenance schedules and manuals and other information needed or requested by the CITY in considering development and maintenance strategies of the design.
- Contract/Construction oversight and closeout

SUBMISSIONS DETAILS

Architect firms should submit a complete qualifications package that includes:

- Complete company profile
- Contact name, number, and email.
- Identification of each team member who will be assigned to perform services of this contract.by name, qualifications, and personal expertise.
- Past five (5) years of specific relevant experience.
- Proposed management approach to be taken and description of the firm's procedure for quality control on this project.
- Anti-Kickback Affidavit, Public Entity Crimes Certification, and Domestic Partner Affidavit for the firm submitting the response.
- Qualifications packages shall be limited to 75 pages

PRE-SUBMISSION MEETING

All firms wishing to submit responses for this project are required to attend one or the other mandatory pre-submission meetings 4:30 PM, November 14, 2012 or 4:30 PM, November 27, 2012 at the Glynn Archer School, 1302 White Street, Key West, FL 33040. Responses submitted by firms that did not attend one of the pre-submission meetings will be rejected. Firms may not satisfy this requirement by having subconsultants attend the pre-submission meeting. Primary firm must attend meeting.

Submit to:

City Clerk
City of Key West
3126 Flagler Ave Street
Key West, Fl 33040

Date/Time:

December 12, 2012
3:00 PM

Identification of Responses:

Responses shall be submitted in two (2) sealed envelopes, one within the other, each clearly marked on the outside: **"Request for Qualifications No. 13-001 –Request for Qualifications for Architectural Services: Key West City Hall,"** the due date, and the respondent's name.

Number of Copies:

Respondents shall submit one response marked "Original", one copy marked "Copy", and 2 CD-ROM or flash drives, each shall contain one PDF file each of the full response. All contents of a Respondent's submittal shall remain the property of the City.

Response Preparation Costs:

The costs of response preparation for both steps in the process are not reimbursable. Response preparation costs are the applicant's total responsibility.

Authorized Signature:

The initial response must contain the signature of a duly authorized officer or agent of the Respondent's company empowered with the right to bind the respondent to the RFQ. The respondent must provide evidence of the authority of the officer or agent to bind the respondent.

Property of the City:

All responses and related materials provided to the City related to this RFQ will become the property of the City of Key West.

License Requirements:

At the time the response is submitted, the Responder must show satisfactory documentation of state licenses (if applicable). Please note that the winning respondent will also be required to obtain and maintain a City of Key West Business Tax Receipt for the duration of the work.

Insurance Requirements:

The Consultant shall maintain limits no less than those stated below:

CONSULTANT is to secure, pay for, and file with the City of Key West, prior to commencing any work under the Contract, all certificates for workers' compensation, public liability, and property damage liability insurance, and such other insurance coverages as may be required by specifications and addenda thereto, in at least the following minimum amounts with specification amounts to prevail if greater than minimum amounts indicated. Notwithstanding any other provision of the Contract, the CONSULTANT shall provide the minimum limits of liability insurance coverage as follows:

Auto Liability	$1,000,000	Combined Single Limit
General Liability	$2,000,000	Aggregate (Per Project)
	$2,000,000	Products Aggregate
	$1,000,000	Any One Occurrence
	$1,000,000	Personal Injury
	$ 300,000	Fire Damage/Legal
Professional Liability	$2,000,000	Per Claim / Aggregate
Additional Umbrella Liability	$2,000,000	Occurrence / Aggregate

CONSULTANT shall furnish an original Certificate of Insurance indicating, and such policy providing coverage to, City of Key West named as an additional insured on all policies—excepting Professional Liability—on a PRIMARY and NON CONTRIBUTORY basis utilizing an ISO standard endorsement at least as broad as CG 2010 (11/85) or its equivalent, (combination of CG 20 10 07 04 and CG 20 37 07 04, providing coverage for completed operations, is acceptable) including a waiver of subrogation clause in favor of City of Key West on all policies. CONSULTANT will maintain the Professional Liability, General Liability, and Umbrella Liability insurance coverages summarized above with coverage continuing in full force including the additional insured endorsement until at least 3 years beyond completion and delivery of the work contracted herein.

Notwithstanding any other provision of the Contract, the CONSULTANT shall maintain complete workers' compensation coverage for each and every employee, principal, officer, representative, or agent of the CONSULTANT who is performing any labor, services, or material under the Contract. Further, CONSULTANT shall additionally maintain the following minimum limits of coverage:

Bodily Injury Each Accident	$1,000,000
Bodily Injury by Disease Each Employee	$1,000,000
Bodily Injury by Disease Policy Limit	$1,000,000

If the work is being done on or near a navigable waterway, CONSULTANT's workers compensation policy shall be endorsed to provide USL&H Act (WC 00 01 06 A) and Jones Act (WC 00 02 01 A) coverage if specified by the City of Key West. CONSULTANT shall provide the City of Key West with a Certificate of Insurance verifying compliance with the workman's compensation coverage as set forth herein and shall provide as often as required by the City of Key West such certification which shall also show the insurance company, policy number, effective and expiration date, and the limits of workman's compensation coverage under each policy.

CONSULTANT's insurance policies shall be endorsed to give 30 days written notice to the City of Key West in the event of cancellation or material change, using form CG 02 24, or its equivalent.

Certificates of Insurance submitted to the City of Key West will not be accepted without copies of the endorsements being requested. This includes additional insured endorsements, cancellation/ material change notice endorsements, and waivers of subrogation. Copies of USL&H Act and Jones Act endorsements will also be required if necessary. PLEASE ADVISE YOUR INSURANCE AGENT ACCORDINGLY.

CONSULTANT will comply with any and all safety regulations required by any agency or regulatory body including but not limited to OSHA. CONSULTANT will notify City of Key West immediately by telephone at (305) xxx-xxxx any accident or injury to anyone that occurs on the jobsite and is related to any of the work being performed by the CONSULTANT.

Indemnification:

The following shall be made a provision of any resulting agreement:

To the fullest extent permitted by law, the CONSULTANT expressly agrees to indemnify and hold harmless the City of Key West, their officers, directors, agents, and employees (herein called the "indemnities") from liabilities, damages, losses and costs, including, but not limited to, reasonable attorney's fees and court costs, such legal expenses to include costs incurred in establishing the indemnification and other rights agreed to in this Paragraph, to persons or property, to the extent caused by the negligence, recklessness, or intentional wrongful misconduct of the CONSULTANT, its Subcontractors or persons employed or utilized by them in the performance of the Contract. Claims by indemnities for indemnification shall be limited to the amount of CONSULTANT's insurance or $1 million per occurrence, whichever is greater. The parties acknowledge that the amount of the indemnity required hereunder bears a reasonable commercial relationship to the Contract and it is part of the project specifications or the RFQ documents, if any.

The indemnification obligations under the Contract shall not be restricted in any way by any limitation on the amount or type of damages, compensation, or benefits payable by or for the CONSULTANT under workers' compensation acts, disability benefits acts, or other employee benefits acts, and shall extend to and include any actions brought by or in the name of any employee of the CONSULTANT or of any third party to whom CONSULTANT may subcontract a part or all of the Work. This indemnification shall continue beyond the date of completion of the work.

In addition, it is understood if at any time any of the policies required by the City shall become unsatisfactory to the City as to form or substance, or if a company issuing any such policy shall become unsatisfactory to the City, the Consultant shall obtain a new policy, submit the same to the City for approval and submit a certificate of insurance as which may be required by the contract. It is understood that upon failure of the Consultant to furnish, deliver and maintain such insurance as required above, the contract at the election of the City may be declared suspended, discontinued or terminated. Further, failure of the Consultant to take out and/or maintain any required insurance shall not relieve the Consultant from any liability under the contract, nor shall the insurance requirements be construed to conflict with the obligations of the Consultant concerning indemnification.

CONTACTS

Every request for information should be in writing addressed to Mr. Doug Bradshaw, Senior Project Manager, emailed or faxed, and to be given consideration must be received at least ten (10) days prior to the date fixed for the opening of the responses to the RFQ. Any and all such interpretations and any supplemental instructions will be in the form of written addendum to the RFQ. If an addendum is issued you will be notified by DemandStar by Onvia. Failure of any Respondent to receive any such addendum or interpretation shall not relieve such Respondent from any obligation under his response as submitted. All addenda so issued shall become a part of the Contract document.

Contact: Doug Bradshaw, Senior Project Manager, 3140 Flagler Ave, Key West, FL 33040, Phone: 305-809-3792, Fax: 305-809-3739. Email: dbradsha@keywestcity.com.

ANTI-KICKBACK AFFIDAVIT

STATE OF FLORIDA)
: SS
COUNTY OF MONROE)

I, the undersigned hereby duly sworn, depose and say that no portion of the sum herein RFQ will be paid to any employees of the City of Key West as a commission, kickback, reward or gift, directly or indirectly by me or any member of my firm or by an officer of the corporation.

By: _____

Sworn and subscribed before me this

_____ day of _____, 20___.

_____
NOTARY PUBLIC, State of Florida at Large

My Commission Expires: _____

SWORN STATEMENT UNDER SECTION 287.133(3)(a)
FLORIDA STATUTES, ON PUBLIC ENTITY CRIMES

THIS FORM MUST BE SIGNED IN THE PRESENCE OF A NOTARY PUBLIC OR OTHER OFFICE AUTHORIZED TO ADMINISTER OATHS.

1. This sworn statement is submitted with RFQ, RFQ or Contract No. _____ for

   _____

2. This sworn statement is submitted by _____
   (Name of entity submitting sworn statement)

   whose business address is _____

   _____and (if applicable) its Federal

   Employer Identification Number (FEIN) is _____(If the entity has no FEIN,

   include the Social Security Number of the individual signing this sworn statement.)

3. My name is_____and my relationship to
   (Please print name of individual signing)

   the entity named above is_____.

4. I understand that a "public entity crime" as defined in Paragraph 287.133(1)(g), Florida Statutes, means a violation of any state or federal law by a person with respect to and directly related to the transaction of business with any public entity or with an agency or political subdivision of any other state or with the United States, including but not limited to, any RFQ or contract for goods or services to be provided to any public entity or an agency or political subdivision of any other state or of the United States and involving antitrust, fraud, theft, bribery, collusion, racketeering, conspiracy, material misrepresentation.

5. I understand that "convicted" or "conviction" as defined in Paragraph 287.133(l)(b), Florida Statutes, means a finding of guilt or a conviction of a public entity crime, with or without an adjudication guilt, in any federal or state trial court of record relating to charges brought by indictment information after July 1, 1989, as a result of a jury verdict, nonjury trial, or entry of a plea of guilty or nolo contendere.

6. I understand that an "affiliate" as defined in Paragraph 287.133(1)(a), Florida Statutes, means

   1. A predecessor or successor of a person convicted of a public entity crime: or

   2. An entity under the control of any natural person who is active in the management of t entity and who has been convicted of a public entity crime. The term "affiliate" includes those officers, directors, executives, partners, shareholders, employees, members, and agents who are active in the management of an affiliate. The ownership by one person of shares constituting controlling interest in another person, or a pooling of equipment or income among persons when not for fair market value under an arm's length agreement, shall be a prima facie case that one person controls another person. A person who knowingly enters into a joint venture with a person who has been convicted of a public entity crime in Florida during the preceding 36 months shall be considered an affiliate.

7. I understand that a "person" as defined in Paragraph 287.133(1)(8), Florida Statutes, means any natural person or entity organized under the laws of any state or of the United States with the legal power to enter into a binding contract and which RFQs or applies to RFQ on contracts for the provision of goods or services let by a public entity, or which otherwise transacts or applies to transact business with a public entity. The term "person" includes those officers, directors, executives, partners, shareholders, employees, members, and agents who are active in management of an entity.

8. Based on information and belief, the statement, which I have marked below, is true in relation to the entity submitting this sworn statement. (Please indicate which statement applies.)

___Neither the entity submitting this sworn statement, nor any officers, directors, executives, partners, shareholders, employees, members, or agents who are active in management of the entity, nor any affiliate of the entity have been charged with and convicted of a public entity crime subsequent to July 1, 1989.

___The entity submitting this sworn statement, or one or more of the officers, directors, executives, partners, shareholders, employees, members, or agents who are active in management of the entity, or an affiliate of the entity has been charged with and convicted of a public entity crime subsequent to July 1, 1989, AND (Please indicate which additional statement applies.)

___There has been a proceeding concerning the conviction before a hearing of the State of Florida, Division of Administrative Hearings. The final order entered by the hearing officer did not place the person or affiliate on the convicted vendor list. (Please attach a copy of the final order.)

___The person or affiliate was placed on the convicted vendor list. Them has been a subsequent proceeding before a hearing officer of the Sate of Florida, Division of Administrative Hearings. The final order entered by the hearing officer determined that it was in the public interest to remove the person or affiliate from the convicted vendor list. (Please attach a copy of the final order.)

___The person or affiliate has not been put on the convicted vendor list. (Please describe any action taken by or pending with the Department of General Services.)

_____
(Signature)

_____
(Date)

STATE OF_____

COUNTY OF_____

_____
PERSONALLY APPEARED BEFORE ME, the undersigned authority,

_____ who, after first being sworn by me, affixed his/her signature in the
(Name of individual signing)

space provided above on this_____ day of _____, 20___.

My commission expires: _____
NOTARY PUBLIC

EQUAL BENEFITS FOR DOMESTIC PARTNERS AFFIDAVIT

STATE OF FLORIDA)
: SS
COUNTY OF _____)

I, the undersigned hereby duly sworn, depose and say that the firm of _____ provides/offers benefits to domestic partners of its employees on the same basis as it provides benefits to employees' spouses per City of Key West Ordinance Sec. 2-799.

By: _____

Sworn and subscribed before me this

_____ day of _____, 20___.

_____
NOTARY PUBLIC, State of Florida at Large

My Commission Expires: _____

City Ordinance Sec. 2-799
Requirements for City Consultants to Provide Equal Benefits for Domestic Partners

(a) Definitions. For purposes of this section only, the following definitions shall apply:

(1) ***Benefits*** means the following plan, program or policy provided or offered by a Consultant to its employees as part of the employer's total compensation package: sick leave, bereavement leave, family medical leave, and health benefits.

(2) ***RFQ*** shall mean a competitive RFQ procedure established by the city through the issuance of an invitation to RFQ, request for responses, request for qualifications, or request for letters of interest.

(3) ***Cash equivalent*** means the amount of money paid to an employee with a domestic partner in lieu of providing benefits to the employee's domestic partner. The cash equivalent is equal to the employer's direct expense of providing benefits to an employee for his or her spouse.

The cash equivalents of the following benefits apply:

a. For bereavement leave, cash payment for the number of days that would be allowed as paid time off for the death of a spouse. Cash payment would be in the form of the wages of the domestic partner employee for the number of days allowed.

b. For health benefits, the cost to the Consultant of the Consultant's share of the single monthly premiums that are being paid for the domestic partner employee, to be paid on a regular basis while the domestic partner employee maintains such insurance in force for himself or herself.

c. For family medical leave, cash payment for the number of days that would be allowed as time off for an employee to care for a spouse who has a serious health condition. Cash payment would be in the form of the wages of the domestic partner employee for the number of days allowed.

(4) ***Contract*** means any written agreement, purchase order, standing order or similar instrument entered into pursuant to the award of a RFQ whereby the city is committed to expend or does expend funds in return for work, labor, professional services, consulting services, supplies, equipment, materials, construction, construction related services or any combination of the foregoing.

(5) ***Consultant*** means any person or persons, sole proprietorship, partnership, joint venture, corporation, or other form of doing business, that is awarded a RFQ and enters into a covered contract with the city, and which maintains five (5) or more full-time employees.

(6) ***Covered contract*** means a contract between the city and a Consultant awarded subsequent to the date when this section becomes effective valued at over twenty thousand dollars ($20,000).

(7) ***Domestic partner*** shall mean any two adults of the same or different sex, who have registered as domestic partners with a governmental body pursuant to state or

local law authorizing such registration, or with an internal registry maintained by the employer of at least one of the domestic partners. A Consultant may institute an internal registry to allow for the provision of equal benefits to employees with domestic partner who do not register their partnerships pursuant to a governmental body authorizing such registration, or who are located in a jurisdiction where no such governmental domestic partnership registry exists. A Consultant that institutes such registry shall not impose criteria for registration that are more stringent than those required for domestic partnership registration by the City of Key West pursuant to Chapter 38, Article V of the Key West Code of Ordinances.

(8) ***Equal benefits*** mean the equality of benefits between employees with spouses and employees with domestic partners, and/or between spouses of employees and domestic partners of employees.

(b) Equal benefits requirements.

(1) Except where otherwise exempt or prohibited by law, a Consultant awarded a covered contract pursuant to a RFQ process shall provide benefits to domestic partners of its employees on the same basis as it provides benefits to employees' spouses.

(2) All RFQ requests for covered contracts which are issued on or after the effective date of this section shall include the requirement to provide equal benefits in the procurement specifications in accordance with this section.

(3) The city shall not enter into any covered contract unless the Consultant certifies that such Consultant does not discriminate in the provision of benefits between employees with domestic partners and employees with spouses and/or between the domestic partners and spouses of such employees.

(4) Such certification shall be in writing and shall be signed by an authorized officer of the Consultant and delivered, along with a description of the Consultant's employee benefits plan, to the city's procurement director prior to entering into such covered contract.

(5) The city manager or his/her designee shall reject a Consultant's certification of compliance if he/she determines that such Consultant discriminates in the provision of benefits or if the city manager or designee determines that the certification was created, or is being used for the purpose of evading the requirements of this section.

(6) The Consultant shall provide the city manager or his/her designee, access to its records for the purpose of audits and/or investigations to ascertain compliance with the provisions of this section, and upon request shall provide evidence that the Consultant is in compliance with the provisions of this section upon each new RFQ, contract renewal, or when the city manager has received a complaint or has reason to believe the Consultant may not be in compliance with the provisions of this section. This shall include but not be limited to providing the city manager or his/her designee with certified copies of all of the Consultant's records pertaining to its benefits policies and its employment policies and practices.

(7) The Consultant may not set up or use its contracting entity for the purpose of evading the requirements imposed by this section.

(c) Mandatory contract provisions pertaining to equal benefits. Unless otherwise exempt, every covered contract shall contain language that obligates the Consultant to comply with the applicable provisions of this section. The language shall include provisions for the following:

(1) During the performance of the covered contract, the Consultant certifies and represents that it will comply with this section.
(2) The failure of the Consultant to comply with this section will be deemed to be a material breach of the covered contract.
(3) If the Consultant fails to comply with this section, the city may terminate the covered contract and all monies due or to become due under the covered contract may be retained by the city. The city may also pursue any and all other remedies at law or in equity for any breach.
(4) If the city manager or his designee determines that a Consultant has set up or used its contracting entity for the purpose of evading the requirements of this section, the city may terminate the covered contract.

(d) Enforcement. If the Consultant fails to comply with the provisions of this section:

(1) The failure to comply may be deemed to be a material breach of the covered contract; or
(2) The city may terminate the covered contract; or
(3) Monies due or to become due under the covered contract may be retained by the city until compliance is achieved; or
(4) The city may also pursue any and all other remedies at law or in equity for any breach;
(5) Failure to comply with this section may also subject Consultant to the procedures set forth in Division 5 of this article, entitled "Debarment of Consultants from city work."

(e) Exceptions and waivers.

The provisions of this section shall not apply where:

(1) The Consultant does not provide benefits to employees' spouses.
(2) The Consultant is a religious organization, association, society or any non-profit charitable or educational institution or organization operated, supervised or controlled by or in conjunction with a religious organization, association or society.
(3) The Consultant is a governmental entity.
(4) The sale or lease of city property.

(5) The provision of this section would violate grant requirement, the laws, rules or regulations of federal or state law (for example, The acquisition services procured pursuant to Chapter 287.055, Florida Statutes known as the "Consultants' Competitive Negotiation Act").

(6) Provided that the Consultant does not discriminate in the provision of benefits, a Consultant may also comply with this section by providing an employee with the cash equivalent of such benefits, if the city manager or his/her designee determines that either:

a. The Consultant has made a reasonable yet unsuccessful effort to provide equal benefits. The Consultant shall provide the city manager or his/her designee with sufficient proof of such inability to provide such benefit or benefits which shall include the measures taken to provide such benefits or benefits and the cash equivalent proposed, along with its certificate of compliance, as is required under this section.

(7) The city commission waives compliance of this section in the best interest of the city, including but not limited to the following circumstances:

a. The covered contract is necessary to respond to an emergency.
b. Where only one RFQ response is received.
c. Where more than one response is received, but the responses demonstrate that none of the Respondents can comply with the requirements of this section.

(f) City's authority to cancel contract. Nothing in this section shall be construed to limit the city's authority to cancel or terminate a contract, deny or withdraw approval to perform a subcontract or provide supplies, issue a non-responsibility finding, issue a non-responsiveness finding, deny a person or entity prequalification, or otherwise deny a person or entity city business.

(g) Timing of application. This section shall be applicable only to covered contracts awarded pursuant to RFQs which are after the date when this section becomes effective.

THE FOLLOWING AGREEMENT IS A DRAFT AGREEMENT AND SHOULD NOT BE FILLED OUT AS PART OF THE SUBMISSION PACKAGE. FINAL AGREEMENT WILL BE IN SUBSTANTIAL CONFORMANCE WITH THE ATTACHED

AGREEMENT

Between

CITY OF KEY WEST

And

_____

For

REQUEST FOR QUALIFICATIONS FOR ARCHITECTURAL SERVICES: KEY WEST CITY HALL

KEY WEST, FLORIDA

Date

This is an Agreement between: CITY OF KEY, its successors and assigns, hereinafter referred to as "CITY,"

AND

_____., a corporation organized under the laws of the State of _____, its successors and assigns, hereinafter referred to as "CONSULTANT."

W I T N E S S E T H, in consideration of the mutual terms and conditions, promises, covenants and payments hereinafter set forth, CITY and CONSULTANT agree as follows:

ARTICLE 1

DEFINITIONS AND IDENTIFICATIONS

For the purposes of this Agreement and the various covenants, conditions, terms and provisions which follow, the definitions and identifications set forth below are assumed to be true and correct and are agreed upon by the parties.

1.1. **Agreement**: This document, Articles 1 through 8, inclusive. Other terms and conditions are included in the CITY's RFQ 13-001, CONSULTANT's Response to RFQ dated _____, 2012, exhibits, and supplemental documents that are by this provision expressly incorporated herein by reference.

1.2. **Commissioners:** Members of the city commission with all legislative powers of the city vested therein. The city commission shall consist of seven (7) commissioners, six (6) of whom shall be elected from single member districts numbered I, II, III, IV, V and VI. The mayor shall be elected by the people at large for a term of two (2) years. Commissioners from districts numbered I, II, III, IV, V and VI shall be elected for a term of four (4) years.

1.3. **Consultant**: The architect or engineer selected to perform the services pursuant to this Agreement.

1.4. **Contract Administrator**: The ranking managerial employee of the CITY or some other employee expressly designated as Contract Administrator by the City Manager, who is the representative of the CITY. In the administration of this Agreement, as contrasted with matters of policy, all parties may rely upon instructions or determinations made by the Contract Administrator; provided, however, that such instructions and determinations do not change the Scope of Services.

1.5. **Contractor**: The person, firm, corporation or other entity that enters into an agreement with CITY to perform the construction work for the project.

1.6. **City:** City of Key West.

ARTICLE 2

PREAMBLE

In order to establish the background, context and frame of reference for this Agreement and generally to express the objectives and intentions of the respective parties hereto, the following statements, representations and explanations shall be accepted as predicates for the undertakings and commitments included within the provisions which follow and may be relied upon by the parties as essential elements of the mutual considerations upon which this Agreement is based.

2.1. The CONSULTANT is not entitled to receive, and the CITY is not obligated to pay, any fees or expenses in excess of the amount budgeted and approved for this project authorized under this Agreement in each fiscal year (October 1-September 30) by CITY. The budgeted amount may only be modified per City Ordinance(s).

2.2. The CITY has met the requirements of the Consultants' Competitive Negotiation Act, as set forth in Section 287.055, Florida Statutes, and has selected CONSULTANT to perform the services hereunder based on the Request for Qualifications 13-001 incorporated by reference and made a part hereof and the Response to the Request for Qualifications from CONSULTANT dated _____, incorporated by reference and made a part hereof.

2.3. Negotiations pertaining to the services to be performed by CONSULTANT were undertaken between CONSULTANT and staff selected by the Commission, and this Agreement incorporates the results of such negotiations.

ARTICLE 3

SCOPE OF SERVICES AND STANDARD OF CARE

3.1. CONSULTANT's services may include but are not limited to the following in regard to the Agreement:

3.1.1. Design of a new City Hall within the existing Glynn Archer School structure
3.1.2. Bid and proposal development services
3.1.3. Historic preservation, restoration, adaptation and conversion of historic office, municipal, educational, or cultural structures to new uses
3.1.4. Permitting assistance
3.1.5. Design of site amenities, landscape, and interior of buildings
3.1.6. Design of buildings in accordance with section 255.2575(2) Florida Statue (Green Buildings/Construction)
3.1.7. Conduct public awareness and input strategies
3.1.8. Preparation of reports, schedules, cost estimates, green construction certifications, maintenance schedules and manuals and other information needed or requested by the CITY in considering development and maintenance strategies of the design.

3.1.9. Contract/Construction oversight and closeout

3.2. CONSULTANT's services shall include Architectural design services, including building and structure design, general site design, consulting for facilities planning, surveying, permitting, preliminary and ongoing cost estimating, auto CAD services, on-site construction services, and any other lawful professional Architectural Services that the CONSULTANT is qualified to provide and that the CITY authorizes the CONSULTANT to undertake in connection with this Agreement. CONSULTANT shall provide all necessary, incidental and related activities and services as required.

3.3. CONSULTANT and CITY acknowledge that the Scope of Services does not delineate every detail and minor work task required to be performed by CONSULTANT. If, during the course of the performance of the services included in this Agreement, CONSULTANT determines that work should be performed to complete the project which is, in the CONSULTANT's opinion, outside the level of effort originally anticipated, whether or not the Scope of Services identifies the work items, CONSULTANT shall notify Contract Administrator in writing in a timely manner before proceeding with the work. If CONSULTANT proceeds with such work without notifying the Contract Administrator, the work shall be deemed to be within the original level of effort, whether or not specifically addressed in the Scope of Services. Notice to Contract Administrator does not constitute authorization or approval by CITY to perform the work. Performance of work by CONSULTANT outside the originally anticipated level of effort without prior written CITY approval or modification of scope is at CONSULTANT's sole risk.

3.4. The specific services to be provided by the CONSULTANT and the compensation for such services shall be as mutually agreed to in this AGREEMENT.

3.5. The CITY may make or approve changes within the general Scope of Services. If such changes affect the CONSULTANT's cost of or time required for performance of the services, an equitable adjustment shall be made.

3.6. The CONSULTANT shall begin services when authorized by a Purchase Order issued by the CITY and delivered to CONSULTANT.

3.7. The CITY and CONSULTANT may negotiate additional scopes of services, compensation, time of performance and other related matters as allowed by this Agreement. If CITY and CONSULTANT cannot contractually agree, CITY shall have the right to immediately terminate negotiations at no cost to CITY and procure services from another source.

3.8. CONSULTANT shall perform the professional services under this Agreement at the level customary for competent and prudent professionals in CONSULTANT'S field performing such services at the time and place where the services are provided. In the event CONSULTANT does not comply with this standard, and omissions or errors are made by CONSULTANT, CONSULTANT will correct such work that contains errors or omissions.

3.9. CONSULTANT is required to perform the work consistent with current applicable Federal, State and City laws, codes and regulations that pertain to the work. Where changes to any laws, codes or regulations affecting the work have a an effective date or are anticipated to be effective at a future date, or if knowledge of anticipated changes is available to CONSULTANT or any subconsultant, CONSULTANT shall present options for their use or implementation.

3.10. Construction Responsibility - Notwithstanding anything in this Agreement, CONSULTANT shall not have control or charge of and shall not be responsible for construction means, methods, techniques, sequences or procedures, or for safety measures, precautions and programs including enforcement of Federal and State safety requirements, in connection with construction work performed by CITY's construction Consultants.

3.11. Estimates - Since CONSULTANT has no control over local conditions, the cost of labor, materials, equipment or services furnished by others, or over competitive bidding or market conditions, CONSULTANT does not guarantee the accuracy of any opinions of probable construction cost as compared to construction Consultant's RFQs or the actual cost to the CITY.

ARTICLE 4

TERM OF AGREEMENT; TIME FOR PERFORMANCE; CONSULTANT DAMAGES;

The term of this Agreement shall run for the duration of the project as determined by the CITY and CONSULTANT and shall be incorporated into the Agreement by an attachment that will include require milestones to be met by CONSULTANT.

4.1. CONSULTANT shall perform the services described in this Agreement within the time periods specified.

4.2. In the event CONSULTANT is unable to complete the above services because of delays resulting from untimely review by CITY or other governmental authorities having jurisdiction over the work, and such delays are not the fault of CONSULTANT, or because of delays which were caused by factors outside the control of CONSULTANT, CITY shall grant a reasonable extension of time for completion of the services and shall provide reasonable compensation, if appropriate. It shall be the responsibility of CONSULTANT to notify CITY within 10 days in writing whenever a delay in approval by a governmental agency, including CITY, is anticipated or experienced, and to inform the Contract Administrator of all facts and details related to the delay.

4.3. In the event the Consultant fails to substantially complete the work on or before the substantial completion date specified in its agreement with CITY or if Consultant is granted an extension of time beyond said substantial completion date, and CONSULTANT's services are extended beyond the substantial completion date, through no fault of CONSULTANT, CONSULTANT shall be compensated in accordance with

Article 5 for all services rendered by CONSULTANT beyond the substantial completion date.

4.4. In the event Consultant fails to substantially complete the work on or before the substantial completion date specified in its agreement with CITY, and the failure to substantially complete is caused in whole or in part by a negligent act, error or omission of CONSULTANT, then CONSULTANT shall pay to CITY its proportional share of any claim for damages to Consultant or CITY arising out of the delay. This provision shall not affect the rights and obligations of either party as set forth in Paragraph 8.8, INDEMNIFICATION OF CITY.

ARTICLE 5

COMPENSATION AND METHOD OF PAYMENT

5.1. AMOUNT AND METHOD OF COMPENSATION

The types of compensation methods, which shall be used to pay for the CONSULTANT's services, are limited to the following:

5.1.1. Lump sum payment/Not-to-Exceed, which includes compensation for all the CONSULTANT'S salaries, general overhead costs, direct expenses, and profit.

5.1.1.1. If the work timing deviates from the assumed schedule for causes beyond CONSULTANT's control, CONSULTANT and/or the CITY reserves the right to request renegotiation of those portions of the lump sum affected by the time change. During construction contract administration, if tasked, it is agreed by both parties that whether construction is completed earlier or later, that a proportional part of the compensation will be adjusted and either given to CONSULTANT for additional work or deleted from the amount owed CONSULTANT for less time required.

5.1.1.2. In the event of a change of scope, CITY shall authorize in writing an appropriate decrease or increase in compensation.

5.1.1.3. Monthly invoicing will be based on an estimate of the percent of work completed at the end of the preceding month.

5.1.1.4. The CONSULTANT shall submit wage rates and other actual unit costs supporting the compensation. The CONSULTANT shall submit a Truth in Negotiation Certificate stating that all data supporting the compensation is accurate, complete, and current at the time of contracting.

5.1.2. Cost Reimbursable-Per Diem (Time and Expenses)

5.1.2.1. Per diem rates are those hourly or daily rates charged for work performed by CONSULTANT's employees of the indicated classifications and include all salaries, overheads, and profit, but do not include allowances for Direct

Expenses. These rates are subject to annual adjustments based on the Consumer Price Index Urban U.S. City Average All Items U.S. Department of Labor Bureau of Labor Statistics.

5.1.2.2. Hourly rates for the contract (CONSULTANT AND Subconsultants): See attached Exhibit A

5.1.2.3. CONSULTANT and Subconsultants allowed annual wage adjustment shall not exceed the Data Resource Institute (DRI) forecast of wage and price escalation (the U.S. Bureau of Labor Statistics [BLS]Employment Cost Index [ECI] for Private Industry)

5.1.2.4. A budgetary amount will be established for the work. This budgetary amount shall not be exceeded unless prior written approval is provided by the CITY. CONSULTANT shall make reasonable efforts to complete the work within the budget and will keep CITY informed of progress toward that end so that the budget or work effort can be adjusted if found necessary.

5.1.2.5. CONSULTANT is not obligated to incur costs beyond the indicated budgets, as may be adjusted, nor is CITY obligated to pay CONSULTANT beyond these limits.

5.1.2.6. When any budget has been increased, CONSULTANT's excess costs expended prior to such increase will be allowable to the same extent as if such costs had been incurred after the approved increase.

5.2. REIMBURSABLES

5.2.1. Direct non-salary expenses, entitled Reimbursables, directly attributable to the Work shall be charged at actual cost, and shall be limited to the following:

5.2.1.1. Identifiable transportation expenses in connection with the Work, subject to the limitations of Section 112.061, Florida Statutes. There shall be no mileage reimbursement for travel within the City of Key West. Transportation expenses to locations outside the City area or from locations outside the City will not be reimbursed unless specifically pre-authorized in writing by the Contract Administrator.

5.2.1.2. Identifiable per diem, meals and lodgings, taxi fares, automobile rental, and miscellaneous travel-connected expenses for CONSULTANT's personnel subject to the limitations of Section 112.061 Florida Statutes. Meals for class C travel inside the City of Key West will not be reimbursed. Lodging will be reimbursed only for room rates equivalent to Holiday Inn, Hampton Inn, or Best Western.

5.2.1.3. Identifiable communication expenses approved by Contract Administrator, long distance telephone, courier and express mail utilized to render the services required by this Agreement.

5.2.1.4. Cost of printing, reproduction or photography that is required by or of CONSULTANT to deliver services set forth in this Agreement.

5.2.1.5. Identifiable testing costs approved by Contract Administrator.

5.2.1.6. All permit fees paid to regulatory agencies for approvals directly attributable to the Work. These permit fees do not include those permits required for the Consultant.

5.2.2. It is acknowledged and agreed to by CONSULTANT that the dollar limitation set forth in Paragraph 5.2.1 is a limitation upon, and describes the maximum extent of, CITY's obligation to reimburse CONSULTANT for direct, non-salary expenses. If CITY or Contract Administrator requests CONSULTANT to incur expenses not contemplated in the amount for Reimbursables, CONSULTANT shall notify Contract Administrator in writing before incurring such expenses. Any such expenses shall be reviewed and approved by CITY prior to incurring such expenses.

5.2.3. All subconsultants' hourly rates shall be billed in the actual amount paid by CONSULTANT. These amounts shall not increase each fiscal year of CITY by more than the Consumer Price Index Urban U.S. City Average All Items U.S. Department of Labor Bureau of Labor Statistics. Reimbursable subconsultant expenses are limited to the items in Paragraph 5.2.1 described above when the subconsultant's agreement provides for reimbursable expenses.

5.3. METHOD OF BILLING

5.3.1. Lump Sum Compensation

CONSULTANT shall submit billings identifying type of work completed on a monthly basis in a timely manner. These billings shall identify the nature of the work performed and the estimated percent of work accomplished. The statement shall show a summary of fees with accrual of the total and credits for portions paid previously. When requested, CONSULTANT shall provide backup for past and current invoices that record hours, personnel, and expense costs on a task basis, so that total hours and costs by task may be determined.

5.3.2. Cost Reimbursable-Per Diem (Time and Expenses) Compensation

CONSULTANT shall submit billings identifying type of work completed on a monthly basis in a timely manner for all personnel hours and Reimbursables attributable to the work. These billings shall identify the nature of the work performed, the total hours of work performed and the employee category and name of the individuals performing same. Billings shall itemize and summarize Reimbursables by category and identify same as to the personnel incurring the expense and the nature of the work with which such expense was associated. Where prior written approval by Contract Administrator is required for Reimbursables, a copy of the approval shall accompany the billing for such reimbursable. The statement shall show a summary of Salary Costs and

Reimbursables with accrual of the total and credits for portions paid previously. External Reimbursables and subconsultant fees must be documented by copies of invoices or receipts that describe the nature of the expenses and contain an identifier that clearly indicates the expense is identifiable to the work. Subsequent addition of the identifier to the invoice or receipt by the CONSULTANT is not acceptable except for meals and travel expenses. Appropriate CONSULTANT's cost accounting forms with a summary of charges must document internal expenses by category. When requested, CONSULTANT shall provide backup for past and current invoices that records hours and rates by employee category, Reimbursables by category, and subconsultant fees on a task basis, so that total hours and costs by task may be determined.

5.3.3. If requested, CONSULTANT shall provide copies of past paid invoices to any subconsultant prior to receiving payment. CITY reserves the right to pay any subconsultant if CONSULTANT has not paid them timely and the services of the subconsultant are necessary to complete the work.

5.4. METHOD OF PAYMENT

5.4.1. CITY shall pay CONSULTANT within forty-five- (45) calendar days from receipt of CONSULTANT's proper invoice with documentation as provided above.

5.4.2. In the event CONSULTANT has utilized a Subconsultant in order to perform the work, CONSULTANT will be required to provide documentation that Subconsultant and Subconsultants of Subconsultants have been paid prior to payment being made to CONSULTANT.

5.4.3. Payment will be made to CONSULTANT at:

ARTICLE 6

CITY 'S RESPONSIBILITIES

6.1. CITY shall assist CONSULTANT by placing at CONSULTANT's disposal all information CITY has available pertinent to the Work including previous reports and any other data relative to design or construction of the Work.

6.2. CITY shall arrange for access to, and make all provisions for, CONSULTANT to enter upon public and private property as required for CONSULTANT to perform its services.

6.3. CITY shall review the CONSULTANT's itemized deliverables/documents identified in the agreement and respond in writing with any comment within the time set forth in the agreement or within a reasonable time.

6.4. CITY shall give prompt written notice to CONSULTANT whenever CITY observes or otherwise becomes aware of any development that affects the scope or timing of CONSULTANT's services or any defect in the work of any Consultant.

ARTICLE 7

MISCELLANEOUS

7.1. OWNERSHIP OF DOCUMENTS

All finished or unfinished documents, data, data matrices and calculations generated and used to evaluate and compute the construction or material requirements for the Work, studies, surveys, drawings, maps, models, photographs and reports prepared or provided by CONSULTANT in connection with this Agreement, whether in hard copy or electronic form, shall become the property of CITY, whether the Work for which they are made is completed or not. If applicable, CITY may withhold any payments then due to CONSULTANT until CONSULTANT complies with the provisions of this Article. CONSULTANT is not responsible for damages caused by the unauthorized re-use by others of any of the materials for other work.

7.2. TERMINATION

7.2.1. This Agreement may be terminated with or without cause by CITY at any time.

7.2.2. Notice of termination shall be provided in accordance with paragraph 8.13 NOTICES of this Agreement.

7.2.3. In the event this Agreement is terminated, CONSULTANT shall be paid for any services performed to the date the Agreement is terminated. Compensation shall be withheld until all documents specified in Section 8.1 of this Agreement are provided to the CITY. Upon being notified of CITY's election to terminate, CONSULTANT shall refrain from performing further services or incurring additional expenses under the terms of this Agreement. Under no circumstances shall CITY make payment of profit for services that have not been performed.

7.3. AUDIT RIGHT AND RETENTION OF RECORDS

7.3.1. CITY shall have the right to audit the books, records, and accounts of CONSULTANT that are related to this Work. CONSULTANT shall keep such books, records, and accounts as may be necessary in order to record complete and correct entries related to the Work.

7.3.2. CONSULTANT shall preserve and make available, at reasonable times for examination and audit by CITY, all financial records, supporting documents, statistical records, and any other documents pertinent to this Agreement for the required retention period of the Florida Public Records Act (Chapter 119, Fla. Stat.), if applicable, or, if the Florida Public Records Act is not applicable, for a minimum period of three (3) years after termination of this Agreement. If any audit has been initiated and audit findings have not been resolved at the end of the retention period or three (3) years, whichever is longer, the books, records, and accounts shall be retained until resolution of the audit findings. If the Florida Public Records Act is determined by CITY to be applicable to CONSULTANT's records, CONSULTANT shall comply with all requirements thereof; however, CONSULTANT shall violate no confidentiality or non-disclosure requirement of either federal or state law. Any incomplete or incorrect entry in such books, records, and accounts shall be a basis for CITY's disallowance and recovery of any payment upon such entry.

7.4. NONDISCRIMINATION, EQUAL EMPLOYMENT OPPORTUNITY, AMERICANS WITH DISABILITIES ACT, AND EQUAL BENEFITS FOR DOMESTIC PARTNERS

7.4.1. CONSULTANT shall not unlawfully discriminate against any person in its operations and activities in its use or expenditure of the funds or any portion of the funds provided by this Agreement and shall affirmatively comply with all applicable provisions of the Americans with Disabilities Act (ADA) in the course of providing any services funded in whole or in part by CITY, including Titles I and II of the ADA (regarding nondiscrimination on the basis of disability), and all applicable regulations, guidelines, and standards.

7.4.2. CONSULTANT's decisions regarding the delivery of services under this Agreement shall be made without regard to or consideration of race, age, religion, color, gender, sexual orientation, gender identity or expression, national origin, marital status, physical or mental disability, political affiliation, or any other factor that can not be lawfully or appropriately used as a basis for service delivery. CONSULTANT shall comply with Title I of the Americans with Disabilities Act regarding nondiscrimination on the basis of disability in employment and further shall not discriminate against any employee or applicant for employment because of race, age, religion, color, gender, sexual orientation, national origin, gender identity or expression, marital status, political affiliation, or physical or mental disability. Such actions shall include, but not be limited to, the following: employment, upgrading, demotion, transfer, recruitment or recruitment advertising, layoff, termination, rates of pay, other forms of compensation, terms and conditions of employment, training (including apprenticeship), and accessibility.

7.4.3. Consultant shall comply with City Ordinance Sec. 2-799 Requirements for City Consultants to Provide Equal Benefits for Domestic Partners

7.5. PUBLIC ENTITY CRIMES ACT

7.5.1. CONSULTANT represents that the execution of this Agreement shall not violate the Public Entity Crimes Act (Section 287.133, Florida Statutes), which essentially provides that a person or affiliate who is a Consultant, consultant or other provider and who has been placed on the convicted vendor list following a conviction for a Public Entity Crime may not submit a RFQ on a contract to provide any goods or services to CITY, may not submit a RFQ on a contract with CITY for the construction or repair of a public building or public work, may not submit RFQs on leases of real property to CITY , may not be awarded or perform work as a Consultant, supplier, subconsultant, or consultant under a contract with CITY , and may not transact any business with CITY in excess of the threshold amount provided in Section 287.017, Florida Statutes, for category two purchases for a period of 36 months from the date of being placed on the convicted vendor list. Violation of this section shall result in termination of this Agreement and recovery of all monies paid hereto, and may result in being barred from CITY's competitive procurement activities.

7.5.2. In addition to the foregoing, CONSULTANT further represents that there has been no determination, based on an audit, that it or any subconsultant, has committed an act defined by Section 287.133, Florida Statutes, as a "public entity crime" and that it has not been formally charged with committing an act defined as a "public entity crime" regardless of the amount of money involved or whether CONSULTANT has been placed on the convicted vendor list.

7.5.3. CONSULTANT shall promptly notify CITY if it or any subconsultant or subconsultant is formally charged with an act defined as a "public entity crime" or has been placed on the convicted vendor list.

7.6. SUBCONSULTANTS

CONSULTANT may use the subconsultants identified in the proposal that was a material part of the selection of CONSULTANT to provide the services under this Agreement. The CITY reserves the right to accept the use of a subconsultant or to reject the selection of a particular subconsultant and to inspect all facilities of any subconsultants in order to make determination as to the capability of the subconsultant to perform properly under this Contract. The CITY's acceptance of a subconsultant shall not be unreasonably withheld. CONSULTANT shall obtain written approval of Contract Administrator prior to changing or adding to the list of subconsultants. The list of subconsultants submitted and currently approved is as follows:

a.
b.

c.
d.

Hourly rates are as on attached Exhibit A.

7.7. ASSIGNMENT AND PERFORMANCE

7.7.1. Neither this Agreement nor any interest herein shall be assigned, transferred, or encumbered by either party and CONSULTANT shall not subcontract any portion of the work required by this Agreement except as authorized pursuant to Section 8.6.

7.7.2. CONSULTANT represents that all persons delivering the services required by this Agreement have the knowledge and skills, either by training, experience, education, or a combination thereof, to adequately and competently perform the duties, obligations, and services set forth in the Scope of Services and to provide and perform such services to CITY's satisfaction for the agreed compensation.

7.7.3. CONSULTANT shall perform its duties, obligations, and services under this Agreement in a skillful and respectable manner. The quality of CONSULTANT's performance and all interim and final product(s) provided to or on behalf of CITY shall be in accordance with the standard of care set forth in Paragraph 3.6.

7.7.4. CONSULTANT shall not change or replace overall project manager identified in the CONSULTANT's response to the RFQ without the Contract Administrator's prior written approval.

7.8. INDEMNIFICATION OF CITY

To the fullest extent permitted by law, the CONSULTANT expressly agrees to indemnify and hold harmless the City of Key West, their officers, directors, agents, and employees (herein called the "indemnities") from liabilities, damages, losses and costs, including, but not limited to, reasonable attorney's fees and court costs, such legal expenses to include costs incurred in establishing the indemnification and other rights agreed to in this Paragraph, to persons or property, to the extent caused by the negligence, recklessness, or intentional wrongful misconduct of the CONSULTANT, its Subcontractors or persons employed or utilized by them in the performance of the Contract. Claims by indemnities for indemnification shall be limited to the amount of CONSULTANT's insurance or $1 million per occurrence, whichever is greater. The parties acknowledge that the amount of the indemnity required hereunder bears a reasonable commercial relationship to the Contract and it is part of the project specifications or the RFQ documents, if any.

The indemnification obligations under the Contract shall not be restricted in any way by any limitation on the amount or type of damages, compensation, or benefits payable by or

for the CONSULTANT under workers' compensation acts, disability benefits acts, or other employee benefits acts, and shall extend to and include any actions brought by or in the name of any employee of the CONSULTANT or of any third party to whom CONSULTANT may subcontract a part or all of the Work. This indemnification shall continue beyond the date of completion of the work.

7.9. INSURANCE

7.9.1. CONSULTANT shall provide, pay for and maintain in force at all times during the services to be performed suitable insurance as listed below

CONSULTANT is to secure, pay for, and file with the City of Key West, prior to commencing any work under the Contract, all certificates for workers' compensation, public liability, and property damage liability insurance, and such other insurance coverages as may be required by specifications and addenda thereto, in at least the following minimum amounts with specification amounts to prevail if greater than minimum amounts indicated. Notwithstanding any other provision of the Contract, the CONSULTANT shall provide the minimum limits of liability insurance coverage as follows:

Auto Liability	$1,000,000	Combined Single Limit
General Liability	$2,000,000	Aggregate (Per Project)
	$2,000,000	Products Aggregate
	$1,000,000	Any One Occurrence
	$1,000,000	Personal Injury
	$ 300,000	Fire Damage/Legal
Professional Liability	$2,000,000	Per Claim / Aggregate
Additional Umbrella Liability	$2,000,000	Occurrence / Aggregate

CONSULTANT shall furnish an original Certificate of Insurance indicating, and such policy providing coverage to, City of Key West named as an additional insured on all policies—excepting Professional Liability—on a PRIMARY and NON CONTRIBUTORY basis utilizing an ISO standard endorsement at least as broad as CG 2010 (11/85) or its equivalent, (combination of CG 20 10 07 04 and CG 20 37 07 04, providing coverage for completed operations, is acceptable) including a waiver of subrogation clause in favor of City of Key West on all policies. CONSULTANT will maintain the Professional Liability, General Liability, and Umbrella Liability insurance coverages summarized above with coverage continuing in full force including the additional insured endorsement until at least 3 years beyond completion and delivery of the work contracted herein.

Notwithstanding any other provision of the Contract, the CONSULTANT shall maintain complete workers' compensation coverage for each and every employee, principal, officer, representative, or agent of the CONSULTANT who is performing any labor, services, or material under the Contract. Further, CONSULTANT shall additionally maintain the following minimum limits of coverage:

Bodily Injury Each Accident	$1,000,000
Bodily Injury by Disease Each Employee	$1,000,000
Bodily Injury by Disease Policy Limit	$1,000,000

If the work is being done on or near a navigable waterway, CONSULTANT's workers compensation policy shall be endorsed to provide USL&H Act (WC 00 01 06 A) and Jones Act (WC 00 02 01 A) coverage if specified by the City of Key West. CONSULTANT shall provide the City of Key West with a Certificate of Insurance verifying compliance with the workman's compensation coverage as set forth herein and shall provide as often as required by the City of Key West such certification which shall also show the insurance company, policy number, effective and expiration date, and the limits of workman's compensation coverage under each policy.

CONSULTANT's insurance policies shall be endorsed to give 30 days written notice to the City of Key West in the event of cancellation or material change, using form CG 02 24, or its equivalent.

Certificates of Insurance submitted to the City of Key West will not be accepted without copies of the endorsements being requested. This includes additional insured endorsements, cancellation/material change notice endorsements, and waivers of subrogation. Copies of USL&H Act and Jones Act endorsements will also be required if necessary. PLEASE ADVISE YOUR INSURANCE AGENT ACCORDINGLY.

CONSULTANT will comply with any and all safety regulations required by any agency or regulatory body including but not limited to OSHA. CONSULTANT will notify City of Key West immediately by telephone at (305) 809-3811 any accident or injury to anyone that occurs on the jobsite and is related to any of the work being performed by the CONSULTANT.

7.10. REPRESENTATIVE OF CITY AND CONSULTANT

7.10.1. The parties recognize that questions in the day-to-day conduct of the Work will arise. The Contract Administrator, upon CONSULTANT's request, shall advise CONSULTANT in writing of one (1) or more CITY employees to whom all communications pertaining to the day-to-day conduct of the Work shall be addressed.

7.10.2. CONSULTANT shall inform the Contract Administrator in writing of CONSULTANT's representative to whom matters involving the conduct of the Work shall be addressed.

7.11. ALL PRIOR AGREEMENTS SUPERSEDED

7.11.1. This document incorporates and includes all prior negotiations, correspondence, conversations, agreements or understandings applicable to the matters contained

herein; and the parties agree that there are no commitments, agreements or understandings concerning the subject matter of this Agreement that are not contained in this document and the exhibits attached. Accordingly, the parties agree that no deviation from the terms hereof shall be predicated upon any prior representations or agreements whether oral or written.

7.11.2. It is further agreed that no modification, amendment or alteration in the terms or conditions contained herein shall be effective unless contained in a written document executed with the same formality and of equal dignity herewith.

7.12. CONSULTING TEAM

7.12.1. The CITY reserves the right to approve the members of the Consulting Team and the roles they will undertake in the assignment. The CITY's acceptance of a team member shall not be unreasonably withheld.

7.12.2. Each assignment issued under this Agreement by the CITY to the Consultant, the Consultant will at the CITY's request, disclose the role, qualifications and hourly rate of each individual working on the assignment.

7.12.3. The CITY reserves the right to require replacement of any of the members of the Consulting Team. Any proposed addition or change of members of the Consulting Team initiated by the Consultant must obtain the CITY Representative's prior written approval.

7.12.4. In the event of the death, incapacity or termination of employment of any member of the Consulting Team before Completion of the Services, the Consultant shall at its own expense and as soon as reasonably practicable arrange to substitute or replace the individual member concerned.

7.12.5. The Consultant shall ensure that the substitute or replacement is no less qualified in terms of relevant experience and qualifications than the outgoing individual and is available at the relevant time to act as such replacement or substitute. The Consultant shall without delay forward curriculum vitae of the proposed substitute or replacement to the CITY. The deployment of such substitute or replacement shall be subject to the CITY's consent.

7.12.6. The Consultant shall solely be responsible for all direct, indirect and consequential costs or losses that may arise from the substitution or replacement of members of the Consulting Team.

7.13. NOTICES

Whenever either party desires to give notice unto the other, such notice must be in writing, sent by certified United States mail, return receipt requested, addressed to the

party for whom it is intended at the place last specified; and the place for giving of notice shall remain such until it shall have been changed by written notice in compliance with the provisions of this paragraph. For the present, the parties designate the following as the respective places for giving of notice:

FOR CITY OF KEY WEST:

City of Key West
3140 Flagler Ave
Key West, FL 33040

FOR CONSULTANT:

7.14. TRUTH-IN-NEGOTIATION CERTIFICATE

Signature of this Agreement by CONSULTANT shall act as the execution of a truth-in-negotiation certificate stating that wage rates and other factual unit costs supporting the compensation of this Agreement are accurate, complete, and current at the time of contracting. The original contract price for any work and any additions thereto shall be adjusted to exclude any significant sums by which CITY determines the contract price was increased due to inaccurate, incomplete, or non-current wage rates and other factual unit costs. All such contract adjustments shall be made within one (1) year following the end of this Agreement.

7.15. INTERPRETATION

The language of this Agreement has been agreed to by both parties to express their mutual intent and no rule of strict construction shall be applied against either party hereto. The headings contained in this Agreement are for reference purposes only and shall not affect in any way the meaning or interpretation of this Agreement. All personal pronouns used in this Agreement shall include the other gender, and the singular shall include the plural, and vice versa, unless the context otherwise requires. Terms such as "herein," "hereof," "hereunder," and "hereinafter" refer to this Agreement as a whole and not to any particular sentence or paragraph where they appear, unless the context otherwise requires. Whenever reference is made to a Paragraph or Article of this Agreement, such reference is to the Paragraph or Article as a whole, including all of the subsections of such Paragraph, unless the reference is made to a particular subsection or subparagraph of such Paragraph or Article.

7.16. CONSULTANT'S STAFF

7.16.1. CONSULTANT shall provide the key staff identified in their proposal for Work as long as such key staffs are in CONSULTANT's employment.

7.16.2. CONSULTANT shall obtain prior written approval of Contract Administrator to change key staff. CONSULTANT shall provide Contract Administrator with such information as necessary to determine the suitability of proposed new key staff. Contract Administrator shall be reasonable in evaluating key staff qualifications.

7.16.3. If Contract Administrator desires to request removal of any of CONSULTANT's staff, Contract Administrator shall first meet with CONSULTANT and provide reasonable justification for said removal.

7.17. INDEPENDENT CONSULTANT

CONSULTANT is an independent Consultant under this Agreement. Services provided by CONSULTANT shall be subject to the supervision of CONSULTANT. In providing the services, CONSULTANT or its agents shall not be acting and shall not be deemed as acting as officers, employees, or agents of the CITY, nor shall they accrue any of the rights or benefits of a CITY employee. The parties expressly acknowledge that it is not their intent to create any rights or obligations in any third person or entity under this Agreement.

7.18. THIRD PARTY BENEFICIARIES

Neither CONSULTANT nor CITY intend directly or substantially to benefit a third party by this Agreement. Therefore, the parties agree that there are no third party beneficiaries to this Agreement and that no third party shall be entitled to assert a claim against either of them based upon this Agreement. No subconsultant, whether named or unnamed, shall be a third party beneficiary of this Agreement.

7.19. CONFLICTS

7.19.1. Neither CONSULTANT nor its employees shall have or hold any continuing or frequently recurring employment or contractual relationship that is substantially antagonistic or incompatible with CONSULTANT’s loyal and conscientious exercise of judgment related to its performance under this Agreement.

7.19.2. CONSULTANT agrees that none of its officers or employees shall, during the term of this Agreement, serve as an expert witness against CITY in any legal or administrative proceeding in which he or she is not a party, unless compelled by court process, nor shall such persons give sworn testimony or issue a report or writing, as an expression of his or her expert opinion, which is adverse or prejudicial to the interests of CITY or in connection with any such pending or threatened legal or administrative proceeding. The limitations of this section shall

not preclude such persons from representing themselves in any action or in any administrative or legal proceeding.

7.19.3. In the event CONSULTANT is permitted to use subconsultants to perform any services required by this Agreement, CONSULTANT agrees to prohibit such subconsultants from having any conflicts as within the meaning of this section, and shall so notify them in writing.

7.20. CONTINGENCY FEE

CONSULTANT warrants that it has not employed or retained any company or person, other than a bona fide employee working solely for CONSULTANT, to solicit or secure this Agreement and that it has not paid or agreed to pay any person, company, corporation, individual or firm, other than a bona fide employee working solely for CONSULTANT, any fee, commission, percentage, gift, or other consideration contingent upon or resulting from the award or making of this Agreement. For a breach or violation of this provision, CITY shall have the right to terminate this Agreement without liability at its discretion, or to deduct from the Agreement price or otherwise recover the full amount of such fee, commission, percentage, gift or consideration.

7.21. WAIVER OF BREACH AND MATERIALITY

7.21.1. Failure by CITY to enforce any provision of this Agreement shall not be deemed a waiver of such provision or modification of this Agreement. A waiver of any breach of a provision of this Agreement shall not be deemed a waiver of any subsequent breach and shall not be construed to be a modification of the terms of this Agreement.

7.21.2. CITY and CONSULTANT agree that each requirement, duty, and obligation set forth herein is substantial and important to the formation of this Agreement and, therefore, is a material term hereof.

7.22. COMPLIANCE WITH LAWS

CONSULTANT shall comply with federal, state, and local laws, codes, ordinances, rules, and regulations in performing its duties, responsibilities, and obligations related to this Agreement applicable at the time the scope of services was drafted for this agreement**.** In addition, at the time agreement is executed, any revisions to applicable federal state, and local laws, codes, ordinances, rules and regulations shall apply.

7.23. SEVERABILITY

In the event this Agreement or a portion of this Agreement is found by a court of competent jurisdiction to be invalid, the remaining provisions shall continue to be effective unless CITY or CONSULTANT elects to terminate this Agreement.

7.24. JOINT PREPARATION

Preparation of this Agreement has been a joint effort of CITY and CONSULTANT and the resulting document shall not, solely as a matter of judicial construction, be construed more severely against one of the parties than any other.

7.25. PRIORITY OF PROVISIONS

If there is a conflict or inconsistency between any term, statement, requirement, or provision of any exhibit attached hereto, any document or events referred to herein, or any document incorporated into this Agreement by reference and a term, statement, requirement, or provision of this Agreement, the term, statement, requirement, or provision contained in Articles 1 through 8 of this Agreement shall prevail and be given effect.

7.26. APPLICABLE LAW AND VENUE

The laws of the State of Florida govern the validity of this Agreement, its interpretation and performance, and any claims related to it. The venue for mediation, arbitration or any other legal proceeding shall be Monroe County, Florida.

7.27. INCORPORATION BY REFERENCE

The attached exhibits are incorporated into and made a part of this Agreement:

Exhibit A – CONSULTANT/Subconsultants' Hourly Rates

7.28. COUNTERPARTS

This Agreement may be executed in three (3) counterparts, each of which shall be deemed to be an original.

REST OF PAGE INTENTIONALLY LEFT BLANK
SIGNATURE PAGE TO FOLLOW

IN WITNESS WHEREOF, the parties hereto have made and executed this Agreement on the respective dates under each signature.

CITY

ATTEST:

_____ _____

Cheryl Smith, City Clerk Bogdan Vitas, Jr., City Manager

____ day of _____,20___ ____day of _____, 20_____

ATTEST:

By _____ By _____

President

_____ _____

(Print Name) (Print Name of President)

_____day of _____, 20_____ _____day of _____, 20_____

Exhibit A
Hourly Fee Schedule
Date

Position Title	Hourly Rate

ATTACHMENT A

SITE PICTURES

SCHEMATIC SITE LAYOUT

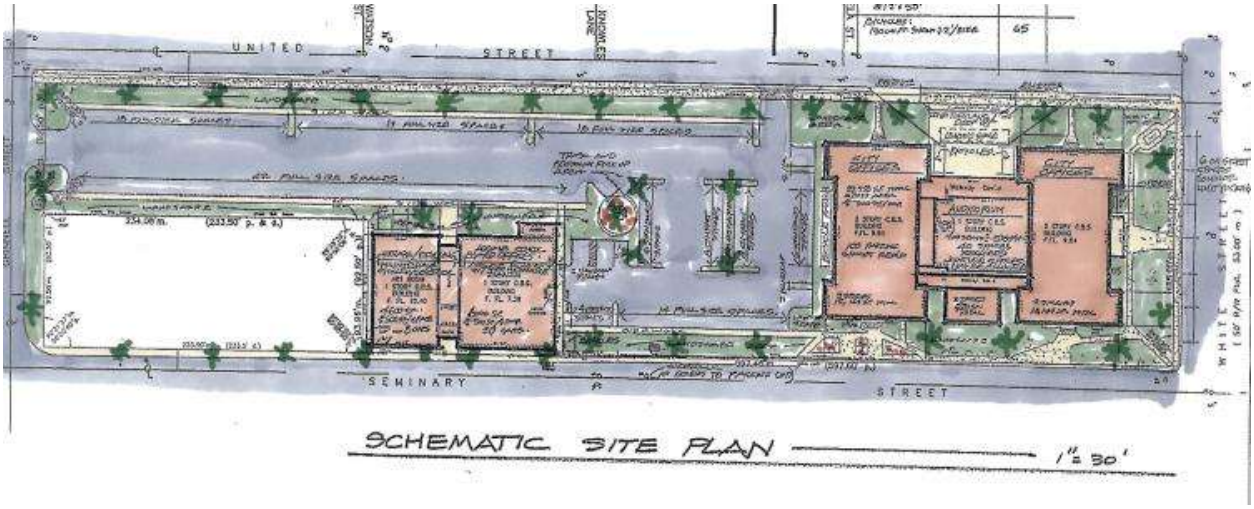

ATTACHMENT B

Report

Property Condition Assessment
Glynn Archer School

Prepared for

The City of Key West, Florida

Prepared by

CH2MHILL®

6410 5th Street, Suite 2-A
Key West, Florida 33040-5835
Phone: (305) 294-1645

September 7, 2012

Executive Summary

General Description

At the request of the City of Key West, CH2M HILL performed a Property Condition Assessment (PCA) on the Glynn Archer School located at 1300 White Street, Key West, Florida. The PCA was performed in general conformance with American Society for Testing and Materials (ASTM) E 2018 and general industry standards. The property includes several buildings. Building A, B, and D were constructed in 1926. Building C was constructed in 1955. (Refer to the attached Site Plan in Appendix A.)

The City requested the PCA to determine if Buildings A and B, including the auditorium, are structurally sound for an adaptive reuse as a city hall complex. Building C will be demolished to provide space for parking, drives, landscaping, and open spaces. Buildings D (original gymnasium) and E (Boys and Girls Club) will be retained by the Monroe County School Board.

This executive summary only covers some of the more critical issues disclosed by the PCA report. The assessment report and this executive summary do not constitute a complete planning study. The report provides a review of the current condition of the facility, which can then be considered part of the first step in a more comprehensive evaluation for investigating the feasibility for the adaptive reuse of the building. Additional investigations and studies should be considered, including but not limited to: site and space planning, in-depth structural evaluation during demolition, economics, and community input.

This executive summary shall not be used as a standalone document and should be relied upon as a guide to help develop a general understanding of the overall PCA report contents. The user is encouraged to read the entire report and should not base any judgments or decision on this summary alone.

Structural System

The assessment of the condition, integrity, and capacity of the existing elements of the structural system of the Glynn Archer School buildings was undertaken for the following reasons: first, to develop an opinion regarding the feasibility of repurposing, rehabilitating, and upgrading the building, particularly the structure, to meet the needs and requirements of office building use and occupancy; and, second, to present our findings, opinions, and suggested next steps should this repurposing avenue be pursued. Our assessment has been based on good standard of care, engineering principals and judgments, and governing codes and standards.

Based on our assessment, our opinion is that the structure can be reinforced to accommodate the requirements of the proposed building occupancy repurposing to office use and satisfy current code requirements. Our degree of certainty with this Rehabilitation Approach is on the order of 75 to 80 percent. In this PCA report, CH2M HILL presents key assumptions and observations, samples taken and analyzed, risks identified with associated possible mitigation measures, structural options, analyses and designs undertaken, and suggested next steps.

One approach is to rehabilitate the existing structure (Rehabilitation Approach). In this approach, the objective is to keep as much of the existing structure as possible. In summary, the existing concrete foundations and exterior walls do not have sufficient strength and structural reinforcing steel to meet current Florida Building Code requirements; however we think that they can be reinforced to meet code requirements. Other, less major, local deficiencies have been identified; we believe those can also be remedied with targeted interventions.

A second option, the Conversion Approach, where the exterior walls are maintained but the interior structural elements are demolished and replaced by an alternate overall load-resisting system. This system would consist of an internal structural steel frame that would not rely on the existing foundations and walls; this would require a complete reframing of the inside of the building, keeping the exterior walls only. Our degree of certainty with the Conversion Approach is on the order of 90 to 95 percent.

COPYRIGHT 2012 BY CH2M HILL, INC.

Preliminary indications are that the Rehabilitation Approach might be marginally less costly than the Conversion Approach, but it also might take less time to implement overall. Capital cost and schedule requirements will have to be understood to form a critical part of the decision process. The degree of certainty expressed above is a reflection of the unknowns associated with each solution approach.

A building designed to meet the requirements of the 2010 Florida Building Code and built in accordance with the design documents, should be expected to last at least 50 years whether adopting the rehabilitation or the conversion approach, with routine maintenance suited to the final building approach adopted.

Modeling of the existing structures shows that the buildings as they stand now would not be able to withstand wind forces of 180 mph. Modeling of the existing structure to determine a wind speed at which the structure would fail without reinforcement was not determined in the preliminary assessment. This would require a full, finite element analysis and iterative approach. Such an approach would be better determined during the design stage, when more of the structure has been exposed and complete information of the structural capacity of the wood frame members and its species has been determined. Modeling results and calculations for the existing structure under both Category II and the superseded Category IV, as well as the proposed improvements for each preliminary assessment cases are included in Appendix G.

Heating, Ventilating, and Air-Conditioning (HVAC) Systems

Buildings A and B at the Glynn Archer School are primarily served by split-system, ductless, DX air-conditioning units. In the main office and teachers' lounge, split-system ducted DX air-conditioning units are used, and two rooftop-mounted packaged DX air-conditioning units are used for the auditorium. Only the auditorium units provide outside air to the spaces. CH2M HILL's visual inspection indicated that most of the condensing units and evaporator units are in fair to poor condition, and many of the indoor evaporator units are reaching the end of their useful life.

CH2M HILL recommends that, given the condition of the equipment and the proposed usage changes to the spaces, the existing HVAC systems be removed and the design professionals provide an updated, code-compliant HVAC system suitable for the new city hall.

Plumbing Systems

The existing plumbing systems consist of a mixture of gang-style and individual use restrooms spread throughout the facility. The water closets, urinals, and lavatories are in acceptable condition. Sanitary piping consists of cast iron and PVC, with the PVC used to repair the cast iron over time. At least one large crack was noted in the cast iron piping in the crawl space. Domestic water piping is a mixture of copper and PVC. Again the PVC appears to have been used to replace sections of copper pipe. A leak was noted in the water piping during a preliminary inspection. The existing restrooms are not compliant with the Americans with Disabilities Act (ADA) code requirements.

CH2M HILL recommends that the existing restrooms, fixtures, and piping be removed. The design professionals should provide updated, code-compliant restrooms on both the first and second floors of the buildings.

Environmental Conditions

CH2M HILL visually inspected the facility and collected representative samples of materials throughout to determine if asbestos, lead paint, or mold were present in the facility. Results indicate that some floor tile and flooring mastic throughout the facility contain asbestos in a non-friable condition. The results of the lead-based paint testing indicated that primer or paint used on the interior and exterior walls and trim contained lead throughout Buildings A, B and the Auditorium; lead-based paint was not found in Building C. Several areas of obvious water damage, such as the ceiling in the outdoor corridor between Buildings A and B, had some mold growth.

COPYRIGHT 2012 BY CH2M HILL, INC.

CH2M HILL recommends that the asbestos-, lead-, and mold-containing materials be removed, following applicable regulations, as part of the demolition before rebuilding the facility.

Electrical

The entire existing electrical system is antiquated. It would not be sufficient for the requirements of a new city hall nor would it meet the current National Electrical Code or other National Fire Protection Association (NFPA) codes and standards. The entire electrical system, including service equipment, conduits, and conductors and associated electrical systems, will require replacement and has little or no salvage value.

The facility would require a new composite building systems structure to house electrical equipment as well as a new point of attachment for service conductors from the electrical utility. The current electrical room is not of sufficient size and is constructed of inadequate materials.

Windows and Doors

The existing exterior door and windows do not comply with the Florida Building Code high-velocity hurricane zone requirements and will need to be replaced with similar sizes and styles to maintain the historical character of the building.

Roofing

The existing roof systems are modified bitumin roofing on wood planks, attached to the roof framing. The roofs have blisters. Water trapped within the roof systems was observed.

CH2M HILL recommends a complete removal of the roofs to the existing deck and installation of insulation and a new code-compliant roof system.

Life Safety

The buildings do not have sprinklers. Also, the fire alarm, smoke detector, and emergency lighting systems are antiquated.

The egress corridor is not fire rated. Corridor walls and the door will need to comply with current code.

CH2M HILL recommends that the life safety requirements be upgraded to meet current codes.

American with Disabilities Act

The existing buildings and site do not comply with the ADA requirements. New restrooms, ramps, handrails, signage, vertical access, and site and parking requirements will need to be included in the new design.

Guide

It should be noted that this executive summary is only intended to represent a brief summary of our findings and is not a detailed account of all the information provided in the PCA. The PCA should be reviewed in its entirety prior to drawing any final conclusions as to the physical needs associated with the buildings and site.

Key Assumptions and Criteria Related to Current Code Standards

The key assumptions of the PCA will affect the evaluation results of the buildings. These assumptions include:

1. Building construction is standard practice for the era in which the structures were built.
2. Historical material design strength was used to evaluate the existing conditions.

COPYRIGHT 2012 BY CH2M HILL, INC.

3. Current Florida Building Codes requirements were used to bring the existing structural system up to its risk category and designated occupancy.
4. The structural framing member size, spacing, condition, and location are based on sample observations of the building by probing the existing structural system.
5. Wood frame 2 x members are considered to be Southern Yellow Pine, grade No. 2.
6. Wood frame 5 x and larger are considered to be Southern Yellow Pine, grade select structural.

Codes and Standards

The 2010 Florida Building Codes and standards govern the design load criteria and requirements of the condition assessment evaluation. The building is assigned a risk category of II in accordance with the provisions of Chapter 16, "Buildings," of the 2010 Florida Building Code. The ultimate design wind speed calculations using 180 miles per hour (mph) are based on American Society of Civil Engineers (ASCE) 7-10; the evaluation and design of the wood structural frame system is governed by ANSI / AF&PA NDS – 2005; and the evaluation and design of the concrete structural system is governed by American Concrete Institute (ACI) 318-05. Wood species and strengths must be sampled and tested to accurately determine species and representative strength to be used for final design.

The design professional shall reference Chapters 11 and 13 of the 2010 Florida Building Code during the detailed design. These sections should be used as the basis for the design of architectural components for compliance with the historic rehabilitation and adaptive reuse of the building.

Opinion of Probable Cost

This executive summary provides some magnitude opinion of estimated costs, which are not complete costs and have limitations. An Order of Magnitude Opinion of Probable Costs is presented in Table ES-1.

CH2M Hill developed a LEVEL 1 Order of Magnitude of Cost. The purpose of the Level 1 estimate is to facilitate budgetary and feasibility determinations. It is prepared based on historical data from recent projects, RS Mean data base, vendors quotes and the estimators experience. The estimate was also based on the Bender & Associates schematic site plan and floor layout (Refer to Appendix A). Further comprehensive investigations which might indicate new issues which could affect the construction cost scenarios along with the possible complexities of a design and footprint configurations. Thus the Level 1 Order of Magnitude estimate has standard range of 25% to 75% accuracy.

As the final design is developed and more details are provided the unknowns are eliminated; fewer assumptions are made; and the pricing of the quantities become more detailed. Contingencies will be reduced as the design documents are produced. (Refer to Appendix F for full breakdown of cost estimates.)

Limitations for Use of the Cost Estimates

The following limitations and parameters should be considered when using the cost estimates.

- These cost estimates primarily cover upgrade of existing defects and improvements disclosed in the PCA report.
- These cost estimates include some, but not all, known code required improvements to the facility should it be considered for change of use to a city hall.
- This PHASE 1 Order of Magnitude Costs provided shall only be relied upon for planning purposes.
- The opinion-of-estimated-costs value may cover items that are not listed in this executive summary but are covered in the formal report.

COPYRIGHT 2012 BY CH2M HILL, INC.

The cost estimate may not include the all the cost to provide ADA compliance or the needed elements to bring the facility up to code compliance for life safety. This cannot be determined at this time because the final layout of the facility is not yet known. At a minimum, an elevator structure and ramps are required to provide ADA access to the first and second floor of both Buildings A and B are included.

TABLE ES-1
Glynn Archer Property Condition Assessment (PCA) — **CH2M HILL**
Key West, Florida — **7-Sep-12**

CONVERSION CONCEPT			*REHABILITATION CONCEPT*		
PROGRAM ESTIMATE BY DIVISION: A & B Wings, and Auditorium			**PROGRAM EST. BY DIVISION: A & B Wings, Auditorium & New Addition**		
AC Gross SF = 33,398 (existing) **Non AC SF = 4,321 (3,009 @ 1st Fl & 1,312 @ 2nd Fl)** **TOTAL SF = 37,719**			**AC Gross sf: 33,398 (existing) + 1,920 sf (new addition) = 35,318 sf** **Non AC SF = 4,321 (3,009 @ 1st Fl & 1,312 @ 2nd Fl)** **TOTAL sf = 39,639**		
DIVISION	**DESCRIPTION**	**AMOUNT**	**DIVISION**	**DESCRIPTION**	**AMOUNT**
1	**General Conditions**	$935,760	**1**	**General Conditions**	$892,059
2	**Site Work**	$899,288	**2**	**Site Work**	$912,382
3	**Concrete**	$1,173,863	**3**	**Concrete**	$103,320
4	**Masonry**	$0	**4**	**Masonry**	$21,000
5	**Metals**	$1,350,852	**5**	**Metals**	$1,923,950
6	**Wood Plastics**	$235,000	**6**	**Wood Plastics**	$235,000
7	**Thermal & Moisture Protection**	$485,025	**7**	**Thermal & Moisture Protection**	$393,388
8	**Doors & Windows**	$706,000	**8**	**Doors & Windows**	$692,000
9	**Finishes**	$865,302	**9**	**Finishes**	$976,202
10	**Specialties**	$66,000	**10**	**Specialties**	$62,400
11	**Equipment**	$55,438	**11**	**Equipment**	$58,278
12	**Furnishings**	$51,000	**12**	**Furnishings**	$51,000
13	**Special Construction**	$210,000	**13**	**Special Construction**	$218,556
14	**Conveying Systems**	$250,000	**14**	**Conveying Systems**	$105,000
15	**Mechanical**	$1,512,275	**15**	**Mechanical**	$1,572,199
16	**Electrical**	$1,497,554	**16**	**Electrical**	$1,595,915
	SUBTOTAL	**$10,293,357**		**SUBTOTAL**	**$9,812,649**
	Gen. Liability Insurance Premium (1%)	$102,934		**Gen. Liability Insurance Premium (1%)**	$98,126
	Overhead & Fee (7.5%)	$779,722		**Overhead & Fee (7.5%)**	$743,308
	Payment & Performance Bond (2%)	$223,520		**Payment & Performance Bond (2%)**	$213,082
	Keys Factor (20%)	$2,279,906		**Keys Factor (20%)**	$2,173,433
	SUBTOTAL	**$13,679,439**		**SUBTOTAL**	**$13,040,598**
	Contingency (10%)	$1,367,944		Contingency (10%)	$1,304,060
	A/E fee - Design (7%)	$957,561		A/E fee - Design (7%)	$912,842
	A/E fee - Construction (5%)	$683,972		A/E fee - Construction (5%)	$652,030
	FF & E: Allowance	$450,000		FF & E: Allowance	450,000
	PROJECT TOTAL	**$17,138,916**		**PROJECT TOTAL**	**$16,359,530**

COPYRIGHT 2012 BY CH2M HILL, INC.

Contents

Executive Summary ..... **i**

1. System Description and Observations **1-1**
1.1 Overall General Description 1-1
1.2 Site 1-1
1.2.1 Stormwater Drainage 1-1
1.2.2 Paving, Curbing, and Parking 1-1
1.2.3 Landscaping and Hardscape 1-1
1.2.4 Utilities 1-2
1.3 Structural Frames and Building Envelope 1-2
1.3.1 Summary 1-2
1.3.2 Foundation 1-5
1.3.3 Auditorium Building Frame 1-7
1.3.4 Building A Roof Framing 1-9
1.3.5 Building A Second-Floor Framing 1-10
1.3.6 Building A First-Floor Framing 1-11
1.3.7 Building A Load-Bearing Walls 1-12
1.3.8 Building B Roof Framing 1-13
1.3.9 Building B Second-Floor Framing 1-14
1.3.10 Building B First-Floor Framing 1-15
1.3.11 Building B Load-Bearing Walls 1-15
1.3.12 Facades 1-16
1.3.13 Roofing 1-17
1.4 Mechanical and Electrical Systems 1-20
1.4.1 Plumbing Systems 1-20
1.4.2 HVAC Systems 1-20
1.4.3 Electrical 1-22
1.5 Life Safety and Fire Protection 1-22
1.5.1 Sprinklers and Standpipes 1-22
1.5.2 Alarm System 1-22
1.5.3 Fire Extinguishers 1-23
1.5.4 Smoke Detectors 1-23
1.5.5 Emergency Lighting 1-23
1.5.6 Means of Egress 1-23
1.5.7 Recommendation 1-23
1.6 ADA Compliance 1-23
1.7 Environmental Conditions 1-23
1.7.1 Asbestos 1-23
1.7.2 Lead-Based Paint 1-24
1.7.3 Mold 1-25

COPYRIGHT 2012 BY CH2M HILL, INC.

Appendixes

A Plans and Sketches
B Photographs
C Nutting Engineers Reports (Geotechnical and Concrete Testing)
D EE&G Environmental Reports (Hazardous Materials Testing)
E E&I (Radiographic Testing)
F Cost Estimates
G Structural Calculations/Modeling Data

COPYRIGHT 2012 BY CH2M HILL, INC.

Acronyms and Abbreviations

ACI	American Concrete Institute
ADA	Americans with Disabilities Act
ASCE	American Society of Civil Engineers
ASTM	American Society for Testing and Materials
CFR	Code of Federal Regulations
EPA	U.S. Environmental Protection Agency
FBC	Florida Building Code (2010)
FRP	fiber-reinforced polymer
HVAC	heating, ventilating, and air conditioning
lbs/in^2	pounds per square inch
LF	linear foot
mph	miles per hour
NDT	non-destructive tests
NEC	National Electrical Code
NFPA	National Fire Protection Association
O.C.	on center
PCA	property condition assessment
psf	pounds per square foot
SF	square foot
VFT	vinyl floor tile

COPYRIGHT 2012 BY CH2M HILL, INC.

SECTION 1

System Description and Observations

1.1 Overall General Description

The Glynn Archer School facility is located on White Street between Seminary Street and United Street in Key West, Florida (see the site plan provided in Appendix A). The facility has always been a school facility. Building A and the auditorium were constructed in 1926 and Building B in the 1930s. Buildings A and B are two-story buildings with approximately 28,308 total square feet of area. The auditorium is a single-story building with approximately 4,550 total square feet of area. When this facility was built, cisterns were used to store fresh water for use in the buildings. A fresh water cistern is located underneath a class room in Building B and was utilized until fresh water from the mainland was available to the City in the early 1940s. Additional buildings were added to the facility over the years; these included a gymnasium (Building D), Building C, and Building E. This property condition assessment (PCA) report addresses Buildings A and B, and the auditorium. Building C is to be demolished.

This report provides a review of the current condition of the facility, which can then be considered part of the first step in a more comprehensive evaluation for investigating the feasibility for the adaptive reuse of the building. Additional investigations and studies should be considered, including but not limited to: site and space planning, in-depth structural evaluation during demolition, economics, and community input.

Accompanying the main text of this report are several appendixes for further information. Appendix A includes site plans, floor plans, and sketches. Appendix B includes photographs of described details. Testing results data are provided in Appendixes C (geotechnical and concrete testing results), D (hazardous materials), and E (radiographic testing). Appendix F provides estimated costs and Appendix G includes structural calculations and modeling data.

A building designed to meet the requirements of the 2010 Florida Building Code and built in accordance with the design documents, should be expected to last at least 50 years, with routine maintenance suited to the final building approach adopted. This expectation exists for both the rehabilitation and conversion approaches.

1.2 Site

1.2.1 Stormwater Drainage

The site currently uses four drainage wells that consist of an excavated hole lined with geotextile fiber and filled with rock. The main gutters from Buildings A and B and the auditorium currently drain to the wells. CH2M HILL recommends that onsite containment and disposal of stormwater be incorporated into the final site plan to the extent possible to minimize current and future impacts to the City stormwater system.

1.2.2 Paving, Curbing, and Parking

Currently, the facility has approximately 30 onsite parking spaces (at the corner of United Street and Grinnell) and relies on on-street parking for teachers and support personnel. The area currently being used as a playground is covered in asphalt and could be used as onsite parking. The area vacated by the proposed demolition of Building C can also be used for onsite parking. The onsite parking should be a permeable area to allow for percolation of stormwater to reduce current contribution to the City stormwater system.

1.2.3 Landscaping and Hardscape

The current site has minimal landscaping and is mostly hardscaped with an asphalt playground and sidewalks. CH2M HILL recommends that the site utilize porous pavement and sidewalks wherever possible to minimize stormwater impacts. Landscaping of the site should be implemented by a landscape professional based on City codes.

COPYRIGHT 2012 BY CH2M HILL, INC.

1.2.4 Utilities

The site currently has water, sanitary sewer, and electrical utilities. CH2M HILL does not anticipate any changes to the utilities. An electrical analysis of the proposed city hall will need to be completed and compared to the available electrical service for the site. If the electrical load exceeds the current service capacity, then off-site electrical modifications will be required.

Water is provided to the site by the Florida Keys Aqueduct Authority. The current water system is assumed to be adequate to serve the proposed city hall. The current facility has excess bathrooms and a cafeteria located on-site.

Sanitary sewer is provided in several of the adjacent streets that surround the site. Providing sanitary sewer to the facility is not considered problematic.

1.3 Structural Frames and Building Envelope

1.3.1 Summary

The existing structure consists of three buildings: two –classroom structures and a central auditorium. The structural system is a wood frame with concrete walls along the exterior perimeter and wood stud walls at the interior. Building A and Building B are two-story building structures, and the auditorium is single-story building structure.

The structural system consists of a primary gravity load supporting system and a primary lateral load-resisting system. The structural system and its primary elements are as follows:

1. Gravity Load Supporting System Evaluation:
    a. Roof ¾” x 3 ½” Straight Sheathing (typical)
    b. Roof Joists 1 $^5/_8$” x 5 ½” (typical)
    c. Auditorium Roof Trusses
    d. Auditorium Columns 18”x18”
    e. Wood Floor Decking ¾” x 5 ½” Tongue Groove Plank (typical)
    f. Wood Floor Joists 1 $^5/_8$” x 7 ½” (typical)
    g. Roof and Floor Girder Wood Members 5 ¾” x 5 $^5/_8$”
    h. 8” Concrete Walls (typical)
    i. 1 $^5/_8$” x 5 ½” Wood Stud Frame Walls (typical)
    j. Foundation: 18”x18” Interior Spread Footings and Continuous Perimeter Strip Footing (typical)
2. Lateral Load Resisting System Elevation:
    a. Roof and Floor Diaphragm
    b. 8” Concrete Perimeter Walls (typical)

CH2M HILL assessed the condition, integrity, and capacity of the existing elements of the structural system of the Glynn Archer School buildings. The objectives of the structural assessment were: first, to develop an opinion regarding the feasibility of repurposing, rehabilitating, and upgrading the building, particularly the structure, to meet the needs and requirements for office building use and occupancy; and second, to present CH2M HILL’s findings, opinions, and suggestions for next steps should the repurposing avenue be pursued. CH2M HILL’s PCA has been based on good standard of care, engineering principals and judgment, and governing codes and standards.

Based on the assessment, CH2M HILL’s opinion is that the structure can be reinforced to accommodate the requirements of the proposed building-occupancy repurposing to office use and satisfy current code requirements.

COPYRIGHT 2012 BY CH2M HILL, INC.

In this PCA report, CH2M HILL presents key assumptions and observations, samples taken and analyzed, risks identified and associated possible mitigation measures, structural options, analyses and designs undertaken, and suggested next steps. Several key deficiencies of the existing structure have been identified through field observations, and field and sample testing; these are noted in this PCA report. Based on our observations, testing, and analyses, upgrading the existing structure will require important field work to enhance the integrity, continuity, and capacity of the structural elements and various constituent elements.

The foundations and exterior walls, both concrete, as part of the existing overall load-resisting system for the building, do not have sufficient strength and reinforcing steel in their present condition, to satisfy the load-carrying requirements of the current Florida Building Code. A significant amount of additional reinforcing will be required to retrofit both the foundations and exterior wall elements for the existing structure to satisfy code requirements.

The existing wood-framed floors and roof structural elements require some local remedial work to provide load path continuity, from roof to walls and between floors and walls, to properly tie all these wind-load-resisting elements together in order to meet current code requirements. The wood-framed structure also requires some local strengthening to augment load capacity to meet code, remediate weather damage and deterioration, and correct damage caused by insects.

The order of magnitude structural cost of this Rehabilitation Approach is estimated to be approximately $2.5 million. This cost must be assessed in combination with the costs of all the other trades and with the long-term operating costs associated with the maintenance of this existing structure. Also to be considered is the possible shorter overall construction implementation time of this Rehabilitation Approach compared to the Conversion Approach described below.

At this time, the one large uncertainty associated with this approach is the cost of fiber-reinforced polymer (FRP) reinforcement to the walls. Refinements of this cost are being sought.

A completely different approach, the Conversion Approach, offers an alternate overall load-resisting system that consists of an internal structural steel frame designed to support all gravity and lateral loads. This approach would not rely on existing concrete foundations and walls, but would require a complete reframing of the inside of the building, keeping the exterior walls only. The new structure would have fewer unknowns and the cost contingencies would be reduced. This approach will require a more extensive demolition schedule and a temporary structural system to brace the existing perimeter walls prior to their integration to the new structure. The order of magnitude structural cost of this approach is estimated to be approximately $1.3 million. This approach can include more downstream flexibility if this is an important component of the planning for the building. This approach will require more time to execute than the Rehabilitation Approach. The existing perimeter walls will require installation of a temporary bracing system, gutting of the interior structure, construction of a new structure, and tie-in of the perimeter walls with the new structure. Then the mechanical and electrical trades, followed by finishing trades, will be able to start work inside the building.

1.3.1.1 Exterior Wall Strength and Reinforcing

The compressive strength tests performed on the concrete sampled from the walls indicate that the existing concrete walls in their present condition have insufficient compressive strength to resist the combined design wind and gravity loads. The non-destructive test evaluation of the existing wall reinforcement proved inconclusive and might be indicative of a deficiency of steel reinforcing required to satisfy current concrete design code (American Concrete Institute [ACI] 318-05) minimum vertical and horizontal reinforcement. Additional investigation will be required to determine the size, spacing, and extent of steel reinforcement in the concrete walls.

It was determined that the concrete wall compressive strengths in Building B (average of 3,813 pounds per square inch [lbs/in^2]) were greater than those obtained for Building A (average of 1,835 lbs/in^2). The uniform reinforcing steel required in the walls of Building A would be greater than required for Building B to resist similar stresses and meet the present code requirements.

COPYRIGHT 2012 BY CH2M HILL, INC.

If the solution adopted is to rehabilitate the structure of the building, keeping the roof and floor wood structures and the perimeter concrete walls as a lateral load-resisting system, then the concrete walls will require strengthening. In this event, the most effective structural solution to retain the existing structure and retrofit the existing concrete walls to meet code requirements will be to use layers of FRP sheets applied to the inside and outside face of the existing concrete walls to increase load-carrying capacity. The existing concrete wall surface must be clean and free of debris and dust prior to installation of FRP. The FRP systems include proprietary aspect; therefore, the final design and installation of the FRP system would be performed by the supplier/manufacturer and by their professional engineer. For a depiction of the concept for reinforcement of existing concrete wall, refer to Drawing SK-S1 in Appendix A.

Alternatively, the existing walls can be reinforced on their inside faces with additional layers of reinforcing steel. The new layer of reinforcement must be dowelled into the face of existing concrete wall and then encased with shotcrete. This method may be more labor and cost intensive than using FRP, and it would use up more floor space due to the thickness of the added concrete. Additional studies would be undertaken at the schematic design stage to analyze a number of alternatives for preliminary pricing before a decision would be made.

1.3.1.2 Foundation Element Strength and Reinforcing

Some concrete foundation footings lack sufficient ground-bearing surface and have insufficient reinforcing steel to support the design load and comply with ACI 318-05 minimum requirements. A number of footings for Buildings A and B will require reinforcement; these have been identified as “RF” for reinforcing on the foundation and first-floor framing plan (See Drawing S-200 in Appendix A). The typical 18” x 18” footing must be enlarged to at least a 42” x 42” square footing to accommodate the required additional reinforcing necessary to resist the loads resulting from current code requirements. Refer to Drawing SK-S11, in Appendix A, for a proposed foundation reinforcement concept to accommodate loads and code requirements.

1.3.1.3 Wood Girder Reinforcement

The wood girders in Building A, Building B, and the auditorium will require additional reinforcing to be attached to the side of each member. The additional reinforcing is required to adequately support minimum uniformly distributed loads and minimum concentrated loads, as prescribed in current building code. Additional wood members, and in some locations structural steel members, will be required to reinforce existing wood members. The reinforcement required is shown on Drawing S-200. A reinforcing schedule with proposed detailing is shown on Drawing SK-S10. (All drawings are provided in Appendix A.)

1.3.1.4 Risks

Based on CH2M HILL’s investigation, assessment, and experience, few significant and major structural risks exist. CH2M HILL believes changing the building occupancy of the structures from school use to office use is possible. CH2M HILL has identified deficiencies in the existing structure and has proposed mitigation by providing preliminary approaches for reinforcing the existing structure to accommodate the proposed change of building occupancy.

Risks that do exist are associated with the uncertainty and reliability of the load-carrying capacity of the existing structural members and the existing conditions that have not been uncovered or were not able to be identified in the limited probing and preliminary assessment. A full invasive investigation was not undertaken so as to limit upfront costs, and not significantly disrupt operations at the Glynn Archer School.

It was noted that wood boring insects (termites) have compromised structural load carrying members in some locations. A more thorough review to fully expose the structure will be required to determine the extent of damage to structural members and whether these elements can be reused. Damaged structural elements will require additional reinforcement, as shown in the attached drawings in Appendix A. The existing floor decking will need to be removed to evaluate the existing joists for wood-boring insects. The associated costs and impact to schedule could be significant and should be vetted as soon as possible to prevent delays to schedule and increased costs.

COPYRIGHT 2012 BY CH2M HILL, INC.

It was also noted that strength results in the concrete foundation and the exterior concrete lateral load-resisting walls varied and were not consistent. CH2M HILL believes this condition is likely to be attributed to the construction methods at the time the structure was built. Certain areas of the structure may require heavier reinforcing than that shown in the attached drawings.

There might also be risks associated with eventual late identification of client program needs, during the design schematic and design development stages; this may impact the structural design. For example, there is significant variability in the code-prescribed design loads for auditorium space based on occupancy and intended use. If the auditorium remains and is used as an assembly area and theater, with fixed seats fastened to the floor, this area can be designed for 60 pounds per square foot (psf); however, if movable seats are used, the area must be designed for 100 psf. Increased loads will result in increased reinforcing to accommodate reuse of the existing structure. CH2M HILL recommends working closely with the structural consultant to ensure desired program requirements are coordinated with structural design requirements that could impact cost, schedule, or feasibility of retrofitting the existing structure.

1.3.1.5 Next Steps

- A refinement of the structural costs associated with the Rehabilitation Approach must be obtained prior to making a decision on the approach to adopt.
- The order of magnitude costs presented for FRP are very preliminary and require upfront preliminary design by manufacturers/suppliers prior to honing in on a more precise price.
- A program of additional non-destructive tests (NDT) should be developed and implemented on the existing concrete walls to verify size, spacing, and quantity of existing steel reinforcement for Buildings A and B, and the auditorium.
- An investigation at all levels of the bearing condition of the wood joists into the concrete walls is to be undertaken if the existing wood floor and roof framing system is retained going forward. If a new interior framing system is selected this investigation will not be required because the existing wood framing system would be demolished.
- If the existing wood floor and roof framing system is retained, development and implementation of a treatment plan to neutralize and remove termites and other wood-boring insects will be needed. Also required would be a plan to help in controlling future insect damage and an operations-stage inspection and maintenance plan and program to address insect control.
- A Quality Control Program should be developed to include structural evaluation services and an independent testing and inspection company to inspect and test the structural elements of the base building work, as they are installed, to satisfy standards. Additionally, certain building elements, such as FRP reinforcing of the existing exterior walls, may require very early design involvement to allow advanced specialized testing of the substrate material in order to develop a suitable installation strategy.

1.3.2 Foundation

1.3.2.1 Auditorium Foundation

Existing Conditions

The foundation of the auditorium consists of continuous, concrete, strip footing at the perimeter of the building and individual, interior, spread footing for each concrete pier (see photos # 1 and # 2 in Appendix B). The interior spread footing consists of an 18” x 18” x 8“ deep concrete footing on which rests a 12” x 12” concrete pier, which in turn supports the wood floor system. Based on the era of concrete construction and x-ray investigation on the exterior concrete walls, the concrete wall structure has less than the minimum reinforcement per current concrete design code ACI 318-05. CH2M HILL did not x-ray the concrete footing or pier. The perimeter concrete footing width is between 26 and 32 inches by 13 inches deep below grade, and 30 inches high above grade. The

COPYRIGHT 2012 BY CH2M HILL, INC.

concrete footing appears to be sound based on current loading conditions. For auditorium foundation layout refer to drawing S-200 in Appendix A.

Deficiency and Mitigation

Concrete footings appear to lack sufficient steel reinforcement and not meet the ACI 318-05 minimum reinforcement. However, the concrete footing edge beyond the concrete pier face is only 3 inches. The concrete footing will have very little bending behavior and will behave like a concrete bearing pad that distributes the load directly to the bearing soil without significant bending or pure shear to the concrete.

The allowable soil bearing capacity is 4,000 pounds per square foot (psf). The interior footings in the auditorium appear to have sufficient capacity to support loads associated with an auditorium function with fixed seating. Should removable seating be desired as part of the future functional plans of the building, the footing capacity has been determined to be insufficient, with a live load demand of 100 psf versus 60 psf for fixed seating, per the Florida Building Code. The footings would have to be reinforced as shown in Drawing SK-S11 in Appendix A. The perimeter concrete footing has insufficient soil contact area to resist compression loads due to wind lateral load overturning moment. The width of the concrete footing should be enlarged to accommodate the current building code design loads.

1.3.2.2 Building A Foundation

Existing Conditions

The foundation of the building consists of continuous concrete strip footing at the perimeter of the building and individual interior spread footing for each concrete pier (see photo #2 in Appendix B). The interior spread footing consists of an 18” x 18” x 8“ deep as noted on the plan type. A concrete footing and a 12” x 12” concrete pier are supporting the wood floor system. Based on the era of concrete construction and x-ray investigation on the exterior concrete walls, the concrete wall structure has less than the minimum reinforcement per current concrete design code ACI 318-05. CH2M HILL did not x-ray the concrete footing or pier; however we have observed one footing that appears to have two #5 vertical bars embedded into the footing without any horizontal ties. The perimeter average concrete footing width is approximately 26 to 32 inches by 30 inches, extended above grade, and 13 inches extended below grade. The concrete footing appears to be sound based on current loading conditions. For Building A foundation layout, refer to drawing S-200 in Appendix A.

Deficiency and Mitigation

Concrete footings appear to lack sufficient steel reinforcement and to not meet the ACI 318-05 minimum reinforcement. However, the concrete footing edge beyond the concrete pier face is only 3 inches for the 18” x 18” footing. The concrete footing will have very little bending behavior and will behave like a concrete bearing pad that distributes the load directly to the bearing soil without significant bending or pure shear to the concrete.

The perimeter concrete footing has insufficient soil contact area to resist compression loads due to wind lateral load overturning moment. The width of the concrete footing should be enlarged to accommodate the effects of the current building code design loads.

The allowable soil bearing capacity is 4,000 psf. The first and last footings in a row along the hallway have sufficient capacity to support the design designated loads; however, the 18” x 18” spread footings remaining in the row do not have sufficient bearing area to support the loads. The 18” x 18” footings must be enlarged to a minimum 42” x 42” square footing. The existing concrete footings that require modification to support the current design loads are designated as “RF” on the plan foundation and first-floor framing in Appendix A.

1.3.2.3 Building B Foundation

Existing Conditions

The foundation of the building consists of continuous concrete strip footing at the perimeter of the building and individual interior spread footing for each concrete pier (see photo #4 in Appendix B). The interior spread footing

COPYRIGHT 2012 BY CH2M HILL, INC.

consists of 18” x 18” x 8“ deep as noted on the plan type. A concrete footing and a 12” x 12” concrete pier are supporting the wood floor system. Based on the era of concrete construction, and x-ray investigation on the exterior concrete walls, the concrete wall structure has less than the minimum reinforcement per current concrete design code ACI 318-05. CH2M HILL did not x-ray the concrete footing or pier; however, we have observed one footing that appears to have two #5 vertical bars embedded into the footing without any horizontal ties. The perimeter average concrete footing width is approximately 26 to 32 inches by 36 inches deep, extended above the grade, and 12 inches below the grade. The concrete footing appears to be sound based on current loading conditions. For Building B foundation layout, refer to drawing S-200 in Appendix A.

Deficiency and Mitigation

Concrete footings appear to lack sufficient steel reinforcement and to not meet the ACI 318-05 minimum reinforcement. However, the concrete footing edge beyond the concrete pier face is only 3 inches for the 18” x 18” footing. The concrete footing will have very little bending behavior and will behave like a concrete bearing pad that distributes the load directly to the bearing soil without significant bending or pure shear to the concrete.

The perimeter concrete footing has insufficient soil contact area to resist compression loads due to wind lateral load overturning moment. The width of the concrete footing should be enlarged to accommodate the effects of the current building code design loads.

The allowable soil bearing capacity is 4,000 psf. The first and last footings in a row along the hallway have sufficient capacity to support the design designated loads; however, the 18” x 18” spread footings remaining in the row do not have sufficient bearing area to support the loads. The 18” x 18” footings must be enlarged to a minimum 42” x 42” square footing. The existing concrete footings that require modification to support the current design loads are designated as “RF” on the foundation and first-floor framing plan in Appendix A.

1.3.3 Auditorium Building Frame

1.3.3.1 Auditorium Roof Framing

Existing Conditions

The auditorium is a single-story building connected to Building A. It consists of concrete perimeter walls and a wood frame structure on the roof and floor level (see photos #5 and #6 in Appendix B). The roof has a ridge at the center and slopes downward toward the east and west. The roof structure consists of ¾” x 3 ½” straight sheathing nailed on the 1 $^5/_8$” x 5 ½” wood joists at 24 inches on center. The 1 $^5/_8$” x 5 ½” joists are spanning in the east and west direction between wood trusses. The wood trusses are spanning in the northern and southern direction between steel trusses. The steel trusses are spanning in the eastern and western direction and are supported by 18” x 25” concrete columns that were built into the perimeter 8-inch concrete wall as piers. The eastern and western, exterior perimeter, 8-inch concrete walls and the 2” x 6” nominal wood stud walls are supporting 1 $^5/_8$” x 5 ½” wood joists. The most southern exterior 8-inch concrete wall is supporting the wood trusses. The northern steel truss is supporting the auditorium roof and the second floor of Building A.

The existing ceiling of the auditorium consists of cement plaster wood lath attached to the underside of the ceiling 1 $^5/_8$” x 7 ½” wood joists that are located below the steel truss bottom chord. The ceiling joists support the foam insulation and the drop-in suspended gypsum board ceiling. The ceiling joists have been supported by steel trusses.

The ¾” x 3 ½” straight sheathing is typically nailed to the support with two 8d common nails. The shear load perpendicular to the sheathing is resolved by couple action of the nail. The shear load parallel to the sheathing is resisted by the nail into the supporting member. The single straight sheathing historical data indicate the diaphragm system has a low shear capacity.

For auditorium roof framing layout of the existing structure, refer to drawing S-202 in Appendix A. For proposed reinforcing for the auditorium roof wood truss, refer to drawing SK-S13 in Appendix A.

COPYRIGHT 2012 BY CH2M HILL, INC.

Deficiency and Mitigation

The ¾" x 3 ½" straight sheathing shear strength has very low horizontal shear capacity. The roof diaphragm has insufficient perimeter chord members that are positively connected to the concrete wall. There also is a lack of out-of-plane anchorage of the exterior wall to the diaphragm. Where the wood joists and wood trusses frame into the concrete wall, the existing wood members are embedded into the pocket without any positive anchor to resist slippage or out-of-plane loading. The exact embedment of the wood member needs to be further field verified for final design. The concrete walls have no positive hurricane anchorage to resist out-of –plane loading and uplift wind forces. The embedment of the wood joist may not have sufficient strength to resist the applied load when combined with gravity and wind loads. Additional hurricane anchors should be installed to connect the wood members to the concrete wall.

The existing roof diaphragm will require reinforcement to satisfy the new code-prescribed lateral loads; this can be achieved by installing new plywood sheathing on top of the existing ¾" x 5 ½"straight sheathing, with a closely spaced nail pattern anchored to the existing roof joists and to the 1 x straight sheathing. The perimeter edge of the roof diaphragm must be connected to the concrete wall with steel clip angle or 2 x wood ledgers to transfer the diaphragm loads laterally into the structural lateral load resisting wall. The top of the concrete must be anchored back to the diaphragm to resist concrete wall out-of-plane loading due to wind loading conditions.

For the reinforcement of the existing structural members and diaphragm, refer to drawings in Appendix A, as follows:

- For roof wood diaphragm, see drawings S-202 and SK-S7.
- For roof existing wood joists, see drawings S-202, SK-S8, and SK-S9.
- For roof anchorage uplift tie-down for wood joist, see Drawing SK-S12.
- For roof existing wood trusses, see drawing S-202.

1.3.3.2 Auditorium First-Floor Framing

Existing Conditions

The floor framing consists of ¾" x 5 ½" tongue-and-groove wood plank secured to the 1 $^5/_8$" x 7 ½" wood joists (see photo #7 in Appendix B). The 1 $^5/_8$" x 7 ½" joists are spaced at 16 inches on center and are spanning between 5 ¾" x 5 $^5/_8$" girders. The wood girders are spanning between piers and footings in the northern and southern directions. The auditorium floor will be used for meetings, as a conference center and assembly area, with fixed seating attached to the floor.

The ¾" x 5 ½" tongue-and-groove wood plank is anchored to the 1 $^5/_8$" x7 ½" with two 8d nails. The 1 $^5/_8$" x 7 ½" wood joists bear on the girder secured with toe nails secured to the wood girder. The wood girder bears directly on the concrete pier without any positive anchorage.

Deficiency and Mitigation

The necessary reinforcement of each wood girders, as identified by CH2M HILL's PCA, has been identified on the plan, provided in Appendix A, and is denoted by "R-*".

1.3.3.3 Auditorium Load-Bearing Walls

Existing Conditions

The load-bearing walls at the auditorium are located at the perimeter of the building. The exterior load-bearing walls are 8-inch concrete vertical structural elements that are supporting the roof wood framing system. The exterior face of the concrete walls has been covered with at least 1 to 2 inches of hard stucco cement paste. The interior face of the walls has been painted with several layers of paint.

There are three cast-in-place concrete columns in the eastern and western exterior walls; the size of each column is approximately 18" x 25". There are also two 18" x 18" concrete columns located in the stage area of the auditorium.

COPYRIGHT 2012 BY CH2M HILL, INC.

Based on x-rays of the east and west concrete walls and column, the reinforcement in these structural elements is lacking steel reinforcement. There are very little vertical and horizontal reinforcement in the concrete walls and concrete columns.

The auditorium interior bearing walls that are part of Building A consist consists of 1 $^5/_8$" x 5 ½" wood studs at 16 inches on center, with cement plaster wood lath on both faces of the wall. The wood stud walls are supporting the second floor of Building A.

Deficiency and Mitigation

The 8-inch concrete walls at the perimeter of the auditorium have low compressive strength and insufficient reinforcement in the wall compared to the current concrete design code ACI 318-05. The existing concrete walls have not satisfied ACI 318-05 minimum vertical and horizontal reinforcement requirements, and exceeded the wall slenderness design criteria. The existing concrete walls do not have sufficient carry capacity to support the combined lateral and vertical loads.

The concrete walls have insufficient hurricane anchors to the floor and roof diaphragm to prevent separation from the floor and roof framing system.

The concrete columns do not satisfy the current concrete design code (ACI 318-05) minimum vertical and horizontal reinforcement. The existing concretes are not adequate to resist the combine design wind load and gravity load.

The existing wall can be reinforced with additional layer of steel reinforcement at inside face of the wall. The new layer of reinforcement must be dowelled into the face of existing concrete wall then encased with shotcrete. In lieu of the steel reinforcement and shotcrete, the existing concrete wall maybe can be strengthened by FRP systems. The layers of FRP will be applied onto the exterior and interior of the concrete wall. The existing concrete wall surface to receive the FRP must be clean and free of debris and dust prior to installation. The installation of the FRP and design will be per the manufacturer. For reinforcement of existing concrete walls, refer to Drawing SK-S1 in Appendix A. The wood girders will require additional members of wood or steel attached to the side of the existing members.

1.3.4 Building A Roof Framing

1.3.4.1 Existing Conditions

Building A is a two- story building partially connected to the auditorium. It consists of concrete perimeter walls and wood frame structure at the roof, second, and ground floor levels (see photos #10 and #11 in Appendix B). The roof has a low slope toward the southern edge of the roof that is over the auditorium roof. The high points of the roof are located at the northeastern and northwestern corners of the roof. The structural roofing system consists of ¾" x 5 ½" straight sheathing nailed on the 1 $^5/_8$" x 5 ½" wood joists and wood trusses. The existing wood joists are alternating with wood trusses spaced at 24 inches on center over the classrooms area. However, the wood joists are spaced at 24 inches on center over the hallway. The ends of the building roof structure consist of built-up 1 $^5/_8$" x 5 ½" top chord, ¾" x 5 ½" web member, and 1 $^5/_8$" x 7 ½" bottom chord. The 1 $^5/_8$" x 5 ½" joists and the built-up wood trusses are spanning east and west direction between perimeter concrete walls and interior wood stud walls. The wood trusses and the wood joists are also support by cripple studs at mid-section of the span. The existing 1 ½" x 3 ½" wood cripple studs are supported by 1 $^5/_8$" x 7 ½" wood ceiling joists that are spaced at 16 inches on center. The ceiling wood joist are supported by exterior 8-inch concrete wall and interior 2x6 nominal wood stud walls located at the hallway.

The existing ceiling of the auditorium consists of cement plaster wood lath attached to the underside of the ceiling 1 $^5/_8$" x 7 ½" wood joists that are located on top of the two 2 x 6 nominal wood top plate stud wall. The ceiling joists support the light fixtures and the drop-in suspended gypsum board ceiling.

The ¾" x 5 ½" straight sheathing is typically nailed to the support with two or three 8d common nails. The shear load parallel to the sheathing is resisted by the nail into the supporting member. The single straight sheathing historical data indicated the diaphragm system has a low shear capacity.

COPYRIGHT 2012 BY CH2M HILL, INC.

For auditorium roof framing layout of the existing structure, refer to drawing S-202 in Appendix A.

1.3.4.2 Deficiency and Mitigation

The ¾" x 5 ½" straight sheathing has very low horizontal shear capacity. The roof diaphragm has insufficient perimeter chord members and is not positively connected to the concrete wall. There is also a lack of out-of-plane anchorage from the exterior concrete wall to the roof diaphragm. Where the wood joists and wood trusses are framed into the concrete wall, the existing wood members are embedded approximately 2 inches into a wall pocket. The embedment of the wood joist into the concrete has insufficient anchors to resist bearing slippage and out-of-plane wind loading. The exact embedment of the wood member needs to be further field verified for final design. The concrete walls have insufficient hurricane anchors to resist out-of –plane wind loading and uplift wind forces. The embedment of the wood joists, wood trusses, and ceiling wood joists may not have sufficient strength to resist the applied loads when combined gravity and wind loads are considered. Additional hurricane anchorage should be added between the wood members to the concrete wall.

The existing roof diaphragm will require reinforcement to satisfy the new code prescribed lateral loads; this can be achieved by installing new plywood sheathing on top of the existing ¾" x 5 ½"straight sheathing with a closely spaced nail pattern anchored to the existing roof joists and to the 1 x straight sheathing. The perimeter edge of the roof diaphragm must be connected to the concrete wall with steel clip angle or 2 x wood ledgers to transfer the diaphragm loads laterally into the structural lateral load resisting wall.

The existing 2 x 4 cripple walls supported by the existing ceiling joist do not have sufficient connection at the top and bottom of the studs to resist uplift wind loads.

The existing wood trusses and their web members and connections have insufficient capacity to resist the wind uplift force. The members and their connection must be reinforced with additional members and positive hurricane ties. The roof plan in Appendix A has been noted by "**" to indicate existing wood joist and wood trusses that require strengthening of either or both their individual members and connections.

The 2 x 4 wood cripple stud walls were erected to reduce the span length and transfers the loads into the wall structural system. The existing 2 x 4 wood cripple stud walls have no hurricane ties at the top and bottom connections of the member. The connections of the wood cripple stud walls must be strengthened to resist hurricane wind loads.

For the reinforcement of the existing structural members and diaphragm refer to sketches, in Appendix A, as follows:

- For roof wood diaphragm, see drawings S-202 and SK-S7.
- For roof existing wood joists, see drawings S-202 and SK-S8.
- For roof existing wood trusses, see drawings S-202, SK-S9, and SK-S14.
- For roof joists at hallway / wood cripple wall, see Drawing SK-S12.
- For ceiling joist support, see Drawing SK-S15.

1.3.5 Building A Second-Floor Framing

1.3.5.1 Existing Conditions

The floor framing consists of ¾" x 5 ½" tongue-and-groove wood planks, secured to the 1 $^5/_8$" x 13 ½" wood joists (see photo #11 in Appendix B). The 1 $^5/_8$" x 13 ½" joist spaced at 16 inches on center span to the 1 $^5/_8$" x 5 ½" wood stud walls. The 1 $^5/_8$" x 5 ½" wood stud walls are located along the eastern and western sides of the hallway and on both sides of exit stairway. The exit stairway is located at both eastern and western ends of the building.

The ¾" x 5 ½" tongue-and-groove wood plank is anchored to the 1 $^5/_8$" x 13 ½" wood joist with two or three 8d nails. The 1 $^5/_8$" x 13 ½" wood joists are spaced at 16 inches on center and bear on the top of the two 2x wood top plate stud wall. The joist is toe-nailed to the wood top plate. The wood stud wall spans the second floor and the underside of the ceiling joists.

COPYRIGHT 2012 BY CH2M HILL, INC.

The second floor wood diaphragm is not sufficiently connected to the exterior concrete wall.

1.3.5.2 Deficiency and Mitigation

The wood girders should be provided with positive attachment to secure them onto the concrete pier and prevent any lateral movement. The positive attachment should be located at least at the first two piers at each row closest to the entrance door (northern interior wall). The concrete piers at this area are two to three feet above grade. Where the existing 1 $^5/_8$" x 7 ½" wood joist has not been toe-nailed to the girder, the wood joist must be secured to the wood girder with a minimum of two 16d nails in a toe-nail pattern.

The second floor diaphragm must be connected to the exterior concrete wall with hurricane anchors. The hurricane anchors must have sufficient capacity to resist the code prescribed design loads and resulting forces. The design wind loads are based on the buildings risk category II, designated for local government office facilities.

For the reinforcement of the existing structural members and diaphragms refer to drawings in Appendix A, as follows:

- For first existing diaphragm, see drawings S-201, SK-S5, and SK-S6.

1.3.6 Building A First-Floor Framing

1.3.6.1 Existing Conditions

The floor framing consists of ¾" x 5 ½" tongue-and-groove wood plank secured to the 1 $^5/_8$" x 7 ½" wood joists. The 1 $^5/_8$" x 7 ½" joists are spanning between 5 ½" x 7 ½" wood girders. The wood girders span piers/footings in the eastern and western directions. The wood girder is continuous over two or more supports. There is some evidence of water damage to the wood structural members, which may have been caused by defective existing plumbing.

The ¾" x 5 ½" tongue-and-groove wood plank is anchored to the 1 $^5/_8$" x7 ½" with two or three 8d common nails. The 1 $^5/_8$" x 7 ½" wood joists bear on the girder with toe nail secured to the wood girder and the vertical 1 $^5/_8$" x 5 ½" wood stud. The wood girder bears directly on the concrete pier without any positive anchorage. The reinforcement of each wood girder has been identified on the plan provided in Appendix A and is denoted by "R-*".

There is evidence of wood joists (1 $^5/_8$" x 7 ½") being damaged by termites or other wood-boring insects on the top and bottom. The wood joist damage occurs at the top of the joist, where wood sheathing connects/bears on the wood joist. There is also wood damage to some of the wood girders.

The existing wood joists (1 $^5/_8$" x 7 ½") that have been damaged and have insufficient carrying capacity to support the design load will need to be reinforced with additional new wood members.

1.3.6.2 Deficiency and Mitigation

The wood girders should be provided with positive attachment to secure them onto the concrete pier and prevent any lateral movement. The positive attachment should be located at the first two piers in each row closest to the entrance door (northern interior wall). The concrete piers in this area are two to three feet above grade. If the existing 1 $^5/_8$" x 7 ½" wood joist has not been toe-nailed to the girder, the wood joist must be secured to the wood girder with a minimum of two 16d nails in a toe-nail pattern.

The existing wood joists (1 $^5/_8$" x 7 ½") that have been damaged by water or insects and are found to have insufficient carrying capacity to support the design load will have to be reinforced with additional new wood members.

Existing wood joists and wood girders are insufficient to support the current 2010 Florida Building codes minimum uniformly distributed live loads. The design live loads are based on the buildings risk category II, designated for office use only, not for emergency preparedness and communications and operation center.

COPYRIGHT 2012 BY CH2M HILL, INC.

The existing wood joist and wood girder will need to be reinforced with additional wood members attached to the side of the existing member. The new reinforcement members will be, at a minimum, southern yellow pine, grade No. 2.

The existing ¾" x 5 ½" wood floor sheathing (plank) will be removed to review the extent of damage to the wood structural members that was caused by boring insects. A new layout of plywood will be installed to meet or exceed the current Florida Building Code requirements.

For the reinforcement of the existing structural members and diaphragm refer to drawings, in Appendix A, as follows:

- For first existing wood joists, see drawings S-201, SK-S2, and SK-S4.
- For first existing wood girders, see drawings S-201 and SK-S3.

1.3.7 Building A Load-Bearing Walls

1.3.7.1 Existing Conditions

Building A load-bearing walls are located at the perimeter of the building and on the interior along corridors. The exterior load-bearing walls are 8-inch concrete vertical structural elements that support the roof wood framing system. The exterior face of the concrete walls has been covered with at least 1 to 2 inches of hard stucco cement paste. The interior face of the walls has been painted with several layers of paint. The corners of the building's concrete walls have been increased to double the thickness of the field wall. The existing concrete wall average compressive strength is an approximately 1,835 lbs/in^2. The concrete walls of Building A are less dense and have large aggregates than those of Building B. The interior walls are 1 $^5/_8$" x 7 ½"wood stud walls.

The exterior perimeter concrete walls have limited amounts of horizontal and vertical reinforcement. Based on the x-ray survey of the perimeter concrete walls, there are few reinforcing bars; but the survey is inconclusive as to the quantity and spacing in vertical and horizontal direction, size of bars, and location of reinforcement.

Based on the x-ray investigation on the perimeter concrete walls, the reinforcement in these structural elements appears to be insufficient and not meet the requirements of the Florida Building Code, in our opinion.

The concrete walls are not positively secured to the floor system.

1.3.7.2 Deficiency and Mitigation

The 8-inch concrete walls at the perimeter of the building have low compressive strength and insufficient reinforcement compared to requirements of the current concrete design code ACI 318-05. The existing concrete walls do not satisfy ACI 318-05 minimum vertical and horizontal reinforcement requirements, and exceed the limit wall slenderness design criteria. The existing concrete walls do not have sufficient carrying capacity to support the combined lateral and vertical loads prescribed by the current Florida Building Code.

The concrete walls have insufficient anchors to the floors and roof diaphragms to prevent separation from the floor and roof framing system. They also have insufficient hurricane anchors to the roof diaphragm to prevent uplift.

The concrete columns do not satisfy the current concrete design code (ACI 318-05) minimum vertical and horizontal reinforcement. The existing concrete is not adequate to resist the combined design wind load and gravity load.

The existing wall can be reinforced with additional layer of steel reinforcement on its inside face. The new layer of reinforcement must be dowelled into the face of the existing concrete wall then encased with shotcrete. In lieu of the steel reinforcement and shotcrete, the existing concrete wall may be strengthened by surface application of FRP systems. The layers of FRP will be applied onto the exterior and interior surfaces of the concrete wall. Concrete wall surfaces must be clean and free of debris and dust prior to installation of the FRP. The installation of the FRP and its design will be per the manufacturer/supplier and their professional engineer based on loads to be

COPYRIGHT 2012 BY CH2M HILL, INC.

provided by the base building design engineer. For a proposed reinforcement scheme of the existing concrete wall, refer to Drawing SK-S1 in Appendix A.

The wood girders will require additional members of wood or steel be attached to their sides.

1.3.8 Building B Roof Framing

1.3.8.1 Existing Conditions

Building B is a two-story building partially connected to the auditorium at ground level only, via a hallway. Building B consists of concrete perimeter walls and a wood frame structure at the roof, second, and ground floor levels. The roof has a low slope downwards toward the north. The high points of the roof are located at the south eastern and southwestern corners of the roof. The structural roofing system consists of ¾" x 5 ½" straight sheathing nailed on the 1 $^5/_8$" x 5 ½" wood joists and wood trusses. The existing wood joists are alternating with wood trusses spaced at 24 inches on center over the classrooms area. However, the wood joists are spaced at 24 inches on center over the hallway. The ends of the building roof structure consist of built-up 1$^5/_8$" x 5 ½" top chord, ¾" x 5 ½" web member, and 1 $^5/_8$" x 7 ½" bottom chord. The 1 $^5/_8$" x 5 ½" joists and the built-up wood trusses are spanning in the east-west direction between perimeter concrete walls and interior wood stud walls. The wood trusses and the wood joists are also support by cripple studs at mid span. The existing 1 ½" x 3 ½" wood cripple studs are supported by 1 $^5/_8$" x 7 ½" wood ceiling joists that are spaced at 16 inches on center. The ceiling wood joist are supported by exterior 8-inch concrete wall and interior 2 x 6 nominal wood stud walls located at the hallway.

The existing ceiling of Building B consists of cement plaster wood lath attached to the underside of the ceiling 1 $^5/_8$" x 7 ½" wood joists that are located on top of the two 2 x 6 nominal wood top plate stud wall. The ceiling joists support the light fixtures and the drop-in suspended gypsum board ceiling.

The ¾" x 5 ½" straight sheathing is typically nailed to the support with two or three 8d common nails. The shear load perpendicular to the sheathing is resolved by coupling action of the nail. The shear load parallel to the sheathing is resisted by the nail into the supporting member. The single straight sheathing historical data indicate the diaphragm system has a low shear capacity.

For Building B roof framing layout of existing structure, refer to drawing S-202 in Appendix A.

1.3.8.2 Deficiency and Mitigation

The ¾" x 5 ½" straight sheathing has very low horizontal shear capacity. The roof diaphragm has insufficient perimeter chord members and is not positively and sufficiently connected to the concrete walls. There is also a lack of out-of-plane anchorage of the exterior concrete wall to the roof diaphragm. Where the wood joists and wood trusses frame into the concrete wall, the existing wood members are embedded approximately 2 inches into wall pockets. The embedment of the wood joist into the concrete has insufficient anchorage to resist bearing slippage and out-of-plane wind loading. The exact embedment of the wood member needs to be further field verified for final design. The concrete walls have insufficient hurricane anchors to resist out-of–plane wind loading and uplift wind forces. The embedment of the wood joists, wood trusses, and ceiling wood joists may not have sufficient strength to resist the applied load when combined with gravity and wind loads. Additional hurricane anchorage should be added between the wood members and the concrete wall.

The existing roof diaphragm will require reinforcement to satisfy the new code-prescribed lateral loads; this can be achieved by installing new plywood sheathing on top of the existing ¾" x 5 ½"straight sheathing with a closely spaced nail pattern anchored to the existing roof joists and to the 1 x straight sheathing. The perimeter edge of the roof diaphragm must be connected to the concrete wall with steel clip angles or 2 x wood ledgers to transfer the diaphragm loads laterally into the structural lateral load resisting wall.

The existing 2 x 4 cripple walls supported by the existing ceiling joist do not have sufficient connection at the top and bottom of the studs to resist uplift wind loads.

COPYRIGHT 2012 BY CH2M HILL, INC.

The existing wood trusses and their web members and connections have insufficient capacity to resist the wind uplift force. The members and their connections must be reinforced with additional members and positively connected to the walls via hurricane ties. The roof plan has, provided in Appendix A, been noted with "**" to indicate existing wood joist and wood trusses that require strengthening of either or both their individual members and connections.

The 2 x 4 wood cripple stud walls were erected to reduce the span length and transfers the loads into the wall structural system. The existing 2 x 4 wood cripple stud walls have no hurricane ties at the top and bottom connection of the member. The connections of the wood cripple stud wall must be strengthened to resist hurricane wind loads.

For the reinforcement of the existing structural members and diaphragm, refer to drawings in Appendix A, as follows:

- For roof wood diaphragm, see drawings S-202 and SK-S7.
- For roof existing wood joists, see drawings S-202 and SK-S8.
- For roof existing wood trusses see drawings S-202, SK-S9, and SK-S14.
- For roof joists at hallway / wood cripple wall, see Drawing SK-S12.
- For ceiling joist support, see Drawing SK-S15.

1.3.9 Building B Second-Floor Framing

1.3.9.1 Existing Conditions

The floor framing consists of ¾" x 5 ½" tongue-and-groove wood planks secured to the 1 $^5/_8$" x 13" wood joists. The 1 $^5/_8$" x 13" wood joists span 1 $^5/_8$" x 5 ½" wood stud walls. The 1 $^5/_8$" x 5 ½" wood stud walls are located along the eastern and western sides of the hallway and on both sides of exit stairway. The exit stairways are located at the eastern and western ends of the building.

The ¾" x 5 ½" tongue-and-groove wood planks are anchored to the 1 $^5/_8$" x13" wood joist with two or three 8d nails. The 1 $^5/_8$" x 13" wood joists are spaced at 12 inches on center and bear on the top of the two 2 x wood top plate stud wall. The joists are toe-nailed to the wood top plate. The wood stud walls span the second floor and the underside of the ceiling joists.

The second floor wood diaphragm is not sufficiently connected to the exterior concrete wall.

1.3.9.2 Deficiency and Mitigation

The wood girders should be positively attached to the concrete piers and prevent any lateral movement. The positive attachment should be located at least at the first two piers in each row closest to the entrance door (northern interior wall). The concrete piers in this area are two to three feet above grade. If the existing 1 $^5/_8$" x 7 ½" wood joists have not been toe-nailed to the girder, the wood joists must be secured to wood girders with a minimum of two 16d nails in a toe-nail pattern.

The second floor diaphragm must be connected to the exterior concrete wall by hurricane anchors. The hurricane anchors must have sufficient capacity to resist the design loads prescribed by the Florida Building Code.

The design wind loads are based on the buildings risk category II, designated for local government office facilities, not for emergency preparedness and communications and operation center.

For the recommended reinforcement of the existing structural members and diaphragms refer to drawings in Appendix A, as follows:

- For first existing diaphragm, see drawings S-201, SK-S5, and SK-S6.

COPYRIGHT 2012 BY CH2M HILL, INC.

1.3.10 Building B First-Floor Framing

1.3.10.1 Existing Conditions

The floor framing consists of ¾" x 5 ½" tongue-and-groove wood planks secured to the 1 $^5/_8$" x 7 ½" wood joists. The 1 $^5/_8$" x 7 ½" joists span 5 ½" x 7 ½" wood girders. The wood girders span in the east-west direction between piers/footings The wood girders are continuous over two or more supports. There is some evidence of water damage to the wood structural members, which may have been cause by defective existing plumbing.

The ¾" x 5 ½" tongue-and-groove wood planks are anchored to the 1 $^5/_8$" x7 ½" with two or three 8d common nails. The 1 $^5/_8$" x 7 ½" wood joists bear on the girders and are connected with toe nails secured to the wood girders and the vertical 1 $^5/_8$" x 5 ½" wood studs. The wood girders bear directly on the concrete piers without any positive anchorage. The necessary reinforcement of the wood girders, identified in CH2M HILL's PCA, have been identified on the plan provided in Appendix A, and are denoted by "R-*".

There is evidence of wood joists (1 $^5/_8$" x 7 ½") being damaged by termites or other wood boring insects on the top and bottom. The wood joist damage occurs at the top of the joist where wood sheathing connects/bears on the wood joist. There is also wood damage at some of the wood girder.

The existing wood joists (1 $^5/_8$" x 7 ½") that have been damaged and have insufficient carrying capacity to support the design load will need to be reinforced with the addition of new wood members.

1.3.10.2 Deficiency and Mitigation

The wood girders should be provided with positive attachment to secure them onto the concrete piers and prevent any lateral movement. The positive attachment should be located at least at the first two piers at each row closest to the entrance door (northern interior wall). The concrete piers at this area are two to three feet above grade. If the existing 1 $^5/_8$" x 7 ½" wood joists have not been toe-nailed to the girder, the wood joist must be secure to wood girder with a minimum of two 16d nails in a toe-nail pattern.

The existing wood joists (1 $^5/_8$" x 7 ½") that have been damaged by water or insects and have insufficient carrying capacity to support the design load will need to be reinforced with the addition of new wood members.

The existing wood joists and wood girders are insufficient to support the current 2010 Florida Building Code's minimum uniformly distributed live loads for office use. The design live loads are based on the buildings risk category II, designated for office use only, not for emergency preparedness and a communications and operation center.

The existing wood joists and wood girders will need to be reinforced with additional wood members attached to their sides. The new reinforcement members will be, at a minimum, southern yellow pine, grade No. 2.

The existing ¾" x 5 ½" wood floor sheathing (planks) will be removed to review the extent of damage caused by boring insects in the wood structural members. A new layer of plywood will be installed to meet or exceed the current Florida Building Code requirements.

For the reinforcement of the existing structural members and diaphragm, refer to drawings in Appendix A, as follows:

- For first existing wood joists, see drawings S-201, SK-S2, and SK-S4.
- For first existing wood girders, see drawings S-201 and SK-S3.

1.3.11 Building B Load-Bearing Walls

1.3.11.1 Existing Conditions

Building B load-bearing walls are located at the perimeter of the building and on the interior along corridors. The exterior of the load-bearing walls are 8-inch concrete vertical structural elements, which support the roof wood framing system. The exterior face of the concrete walls has been covered with at least 1 to 2 inches of hard stucco cement paste. The interior face of the walls has been painted with several layers of paint. The corners of the

COPYRIGHT 2012 BY CH2M HILL, INC.

building's concrete walls have been increased to double the thickness of the field wall. The existing concrete wall average compressive strength is approximately 3,813 lbs/in^2.

The exterior perimeter concrete walls have a limited amount of horizontal and vertical reinforcement. Based on the x-ray survey of the perimeter concrete walls, there are few reinforcing bars; but the survey is inconclusive as to the quantity and spacing in vertical and horizontal directions, size of bars, and location of reinforcement.

Based on the x-ray investigation on the perimeter concrete walls, the reinforcement in these structural elements appears to be insufficient and not meet the requirements of the Florida Building Code, in our opinion.

The concrete walls are not positively secured to the floor system.

1.3.11.2 Deficiency and Mitigation

The 8-inch concrete walls at the perimeter of the building have low compressive strength and insufficient reinforcement compared to the requirements of the current design code ACI 318-05. The existing concrete walls do not satisfy ACI 318-05 minimum vertical and horizontal reinforcement requirements, and exceed the limit wall slenderness design criteria. The existing concrete walls do not have sufficient carrying capacity to support the combined lateral and vertical loads prescribed by the current Florida Building Code.

The concrete walls have insufficient anchors to the floor and to the roof diaphragms to prevent separation from the floor and roof framing system. They also have insufficient hurricane anchors to the roof diaphragm to prevent uplift.

The concrete columns do not satisfy the current concrete design code (ACI 318-05) minimum vertical and horizontal reinforcement. The existing concrete is not adequate to resist the combine design wind load and gravity load.

The existing wall can be reinforced with an additional layer of steel reinforcement on its inside face. The new layer of reinforcement must be dowelled into the face of existing concrete wall, and then encased with shotcrete. In lieu of the steel reinforcement and shotcrete, the existing concrete wall can be strengthened by surface application of FRP systems. The layers of FRP will be applied onto the exterior and interior surfaces of the concrete wall. Concrete wall surfaces must be clean and free of debris and dust prior to installation of the FRP. The installation of the FRP and its design will be per the manufacturer/supplier and their professional engineer, based on loads to be provided by the base building design engineer. For a proposed reinforcement scheme of an existing concrete wall, refer to Drawing SK-S1 in Appendix A.

The wood girders will require additional members of wood or steel attached to their side. The reinforcement required has been identified on plan S-200 and on the proposed reinforcing schedule provided on Drawing SK-S10 in Appendix A.

1.3.12 Facades

1.3.12.1 Fenestration System

Exterior Walls

1. The exterior walls are constructed on concrete masonry unit blocks with a stucco veneer.
2. Visible sections of the exterior walls were found to be in fair condition.

Windows

1. The exterior windows are aluminum awning units with clear glazing.
2. The windows are non-rated or impact resistant. There are accordion hurricane shutters at each window.

Doors

1. The exterior doors are solid core wood. The entry door has sidelight and transom.
2. The doors are not rated or compliant with Americans with Disabilities Act (ADA) requirements.

COPYRIGHT 2012 BY CH2M HILL, INC.

1.3.12.2 Recommendations

1. Due to the historic significance of the structure, the exterior walls and details shall be restored or preserved in keeping with the historic character of the property, per the Florida Building Code, Chapter 11 for Historic Buildings, which covers conservation and use of historic buildings. However, the FRP system cladding will require a new stucco finish to replicate the existing façade, changing the historic fabric of the building.
2. New impact doors and windows will be required to match the style, size, scale, and proportion of the existing building.

1.3.13 Roofing

1.3.13.1 Background Information

The roof at the Glynn Archer School was inspected by CH2M HILL from July 17 through July 20, 2012. This section of the PCA contains the following:

1. Description of the roof systems and components
2. Identification of deficiencies and roof problems through tests and photos
3. Condition report
4. Recommendations

1.3.13.2 Description

1. Building A
   Modified Bitumin Roof 8,500 square feet (SF)
   Roof Perimeter 410 linear feet (LF)
2. Auditorium Roof
   Modified Bitumin Roof 6,500 SF
   Roof Perimeter 400 LF
3. Building B
   Modified Bitumin Roof 8,500 SF
   Roof Perimeter 410 LF
4. Core samples of the roofs broken down by layers from top to bottom.
   a. **Building A (Reroofed over an Existing Roof)**
      1) Roof Surfacing
         - Mineral surface cap sheet set in hot asphalt
      2) Roof System
         - Two-ply sheets set in hot asphalt
      3) Insulation
         - Mechanically fastened ½ thick perlite insulation board
      4) Existing Roof Surfacing
         - Gravel set in hot asphalt
      5) Existing Roof System
         - Two-ply sheets set in hot asphalt
      6) Existing Vapor Barrier
         - One-ply sheet mechanically fastened to roof deck
      7) Roof Deck
         - 1” x 4” tongue-and-groove wood planks
         - Mechanically fastened to roof joist with 8b nails

COPYRIGHT 2012 BY CH2M HILL, INC.

8) Roof Structure
   - 2” x 6” roof joist at 2 feet on center (O.C.)

b. **Auditorium (North Area was Reroofed Over an Existing Roof; South Area was Completely Reroofed)**

North Area Roof Components same as Building A Roof

South Area:

1) Roof Surfacing
   - Mineral surface cap sheet set in hot asphalt
2) Roof System
   - 2-ply sheets set in hot asphalt
3) Vapor Barrier
   - 1-ply sheet mechanically fastened to roof deck
4) Roof Deck
   - 1” x 4” tongue-and-groove wood planks
   - Mechanically fastened to roof joist with 8b nails
5) Roof Structure
   - 2” x 6” roof joist at 2 feet O.C.

East and West Lower Roof

1) Roof Surfacing
   - Mineral surface cap sheet set in hot asphalt
2) Roof System
   - 2-ply sheets set in hot asphalt
3) Vapor Barrier
   - 1-ply sheet mechanically fastened to roof deck
4) Roof Deck
   - 1” x 2-1/2” tongue-and-groove wood planks
   - Mechanically fastened to roof joist with 8b nails
5) Roof Structure
   - 2” x 8” roof joist at 2 feet O.C.

c. **Building B (Reroofed over an Existing Roof)**

1) Roof Surfacing
   - Mineral surface cap sheet set in hot asphalt
2) Roof System
   - Two-ply sheets set in hot asphalt
3) Insulation
   - Mechanically fastened ½ thick perlite insulation board
4) Existing Roof Surfacing
   - Gravel set in hot asphalt
5) Existing Roof System
   - Two-ply sheets set in hot asphalt

COPYRIGHT 2012 BY CH2M HILL, INC.

6) Existing Vapor Barrier
   - One-ply sheet mechanically fastened to roof deck
7) Roof Deck
   - 1” x 4” wood planks
   - Mechanically fastened to roof joist with 8b nails
8) Roof Structure
   - 2” x 6” Roof Joist at 2 feet O.C.

1.3.13.3 Identification

1. Roof overview photographs. While the surface of the roofs appears to be in fair condition, further investigation revealed that the roof systems are in poor condition.

   See photos #12, 13, and 14 in Appendix B.

2. Most of the flashing around the perimeter and roof top equipment are in poor condition. There are splits and openings in flashing.

   See photos #15 through 22 in Appendix B.

3. Blisters in the roof are widespread. Many blisters are very large. Blisters occur when water is trapped within the roof system. Many of the blisters are brittle and may split, which could allow water to enter the building.

   See photos #23 through 25 in Appendix B.

4. Alligatoring in the base flashing is widespread. Alligatoring is the cracking of the surfacing bituminous roof coating. It is caused by the drying out of the exposed asphalt surfacing by the sun. Water will enter the roof system and cause unseen damage in the roof system. As the surface layers fail, the fiberglass reinforcement underneath is exposed and becomes brittle, and membrane failure inevitably follows.

   See photos #26 through 28 in Appendix B.

1.3.13.4 Condition Report

1. Core samples have been taken of the roof systems. These cross sections of the roofs indicate water is entering the roofs system and being trapped between the existing built-up roof and the modified bitumen reroof. Watertight integrity should not be expected of these roofs.

See photos #29 through 32 in Appendix B.

2. The base flashings at the perimeter and mechanical unit curbs have failed and received multiple repairs.
3. Many old and failed repairs have been recoated or reroofed. These new repairs applied over old repairs may not be watertight.
4. Most of the roofs have sufficient slope to shed water. There are two areas on the auditorium’s lower roofs that do not have sufficient slope and hold water.

   The roof contains many medium and large blisters. These blisters show water intrusion between the roof systems. These blisters are in danger of rupture.

1.3.13.5 Recommendation

A complete removal of the existing roof systems to the wood deck, and the installation of a new roof with the proper insulation, should be considered soon. Because of the complex nature and the proposed adaptive reuse of these buildings, the design professional should determine which roof system will be best for the new city hall.

COPYRIGHT 2012 BY CH2M HILL, INC.

1.4 Mechanical and Electrical Systems

1.4.1 Plumbing Systems

1.4.1.1 Background Information

The plumbing systems at the Glynn Archer School were visually inspected by CH2M HILL from July 17 through July 19, 2012. This section of the PCA contains the following:

1. Description and condition assessment of the plumbing systems and components
2. Recommendations

1.4.1.2 Description and Condition Assessment

1. Fixtures

The building contains approximately 25 water closets, 7 urinals, and 16 lavatories located in restrooms throughout the two buildings. The fixtures are in fair to good condition.

2. Sanitary Piping

Sanitary piping consists of a mixture of cast iron and PVC pipe. Most of the pipe in the crawl spaces was PVC; most of the pipe above the level of the first floor leading to second floor restrooms was cast iron. The pipe appeared to be in fair to good condition. A large crack was noted in the cast iron sanitary piping leading from the teachers' lounge (Room 121).

The sanitary pipe exited the building to White Street from Building A and to United Street from Building B.

3. Domestic Water Piping

Domestic water enters the property from a main running on United Street, with meters located in the sidewalk north of Building B. The domestic water piping is a mixture of copper and PVC piping. Similar to the sanitary piping, PVC is used in the crawl space and the copper pipe is located in the walls above the level of the first floor. A leak was noted in the domestic water piping in the crawl space area below the administration area during a preliminary walkthrough in April; this leak was corrected by the time of the July inspection. The piping appeared to be in fair to good condition.

1.4.1.3 Recommendations

The locations of the current restrooms do not appear to match the locations of the restrooms in the proposed city hall reuse. In addition, the current restrooms do not meet requirements of the codes for handicapped access. CH2M HILL recommends the current fixtures and piping be removed and the design professional provide a new design based on the requirements of the new city hall layout.

1.4.2 HVAC Systems

1.4.2.1 Background Information

The HVAC systems at the Glynn Archer School were visually inspected by CH2M HILL from July 17 through July 19, 2012. This section of the PCA contains the following:

1. Description and condition assessment of the HVAC systems and components
2. Recommendations

1.4.2.2 Description and Condition Assessment

Classrooms

In general, the classrooms of the school are served by ductless split system DX air-conditioning units, with the condensing units located on the ground outside the classroom and the evaporator units located on the walls of the classrooms. The units are controlled by thermostats located in the classrooms. The condition of the

COPYRIGHT 2012 BY CH2M HILL, INC.

condensing units ranged from poor (large amounts of rust and clogged coils) to nearly new. The following condensing and evaporator units serving classrooms were found at the school:

Building	Condensing Unit Location	Condition	Evaporator Coil Location	Condition
A	Ground, SE Corner	Fair	Room 200	Inaccessible
A	Ground, SE Corner	Good	Room 100	Fair
A	Ground, Front South	Good	Room 213	Fair
A	Ground, Front North	Fair	Room 213	Fair
A	Ground, Front North	Fair	Room 202	Fair
A	Ground, North side	Poor	Room 203	Inaccessible
A	Ground, NW Corner	Poor	Room 205	Fair
A	Ground, NW Corner	Poor	Room 102	Fair
A	Ground, SE Corner	Fair	Room 204	Fair
A	Ground, SE Corner	Poor	Room 103	Fair
A	Wall Mount, Outside Room 212	Fair	Room 212	Fair
B	Ground, SE Corner	Fair	Room 206	Fair
B	Ground, SE Corner	Fair	Room 104	Fair
B	South CU on Bridge, East Side	Poor	Room 215	New
B	North CU on Bridge, East Side	Fair	Room 105	Good
B	Ground, NE corner	Good	Room 106	Poor
B	Ground, NE corner	Good	Room 207	Fair
B	Roof, NW Corner	Inaccessible	Not Known	--
B	Roof, NW Corner	Good	Room 108	Fair
B	Roof, NW Corner	Fair	Room 209	Fair
B	Ground, SW Corner	Good	Room 109	Fair
B	Ground, SW Corner	Good	Room 208	Good

Definitions used in PCA: *New: newly installed; Good: installed in last several years, little to no rust on unit casing, coils free of debris and coil fins not damaged; Fair: over 5 years old, some rust on unit casing, limited debris in coils, with some coil fin damage; Poor: nearing the end of useful life, severe rust, clogged coils, extensive fin damage.*

Administrative Areas

The administration areas of the school (the main office in Building A and the teachers' lounge in Building B) are served by split system DX air-conditioning units, with the condensing units located on the ground outside the rooms and the air handling units located in the space served. The air handling unit serving the main office is located in a closet and is ducted to the spaces. The unit serving the teachers' lounge is located in the lounge with a central duct and single register serving the space. The units are controlled by thermostats located in the areas served. The following condensing and evaporator units serving administrative areas were found at the school:

Building	Condensing Unit Location	Condition	Evaporator Coil Location	Condition
A	Ground, Front North	Poor	Room 119G (Main Office)	Poor
B	Ground, South Side	Fair	Room 121 (Teachers' Lounge)	Good

Auditorium

The auditorium of the school is served by two rooftop-mounted packaged air handling units located on the roof of the auditorium. Supply and return air from the units is ducted directly into the auditorium through a combined diffuser/return grille for each unit. The units are controlled by thermostats located in the auditorium.

COPYRIGHT 2012 BY CH2M HILL, INC.

- Corridors:

The corridors of the school are not conditioned.

- Restrooms:

The restrooms of the school are served by rooftop mounted exhaust fans in fair condition.

1.4.2.3 Recommendations

The current HVAC system is not suitable for the proposed city hall reuse. The majority of the current systems are in fair to poor condition and do not meet code requirements for provision of outside air to the spaces. In addition, the ductless split systems are unlikely to meet the cooling loads of the newly designed spaces. CH2M HILL recommends that the existing systems be removed and the design professional determine which HVAC system will best meet the requirements of the new city hall based on the use of the spaces.

1.4.3 Electrical

Recommendations are the result of a preliminary inspection of the existing electrical systems of the Glynn Archer School taking place from July 17 through July 20, 2012.

See photos #40 through 42 in Appendix B.

1.4.3.1 Observations

Modifications to the existing electrical system over the past 10 to 15 years have resulted in a combination of several different types of power distribution and branch circuit systems. These systems currently meet the minimum needs of the existing facility, but are not adequate for expansion. Additionally, the magnitude of required improvements and renovations of the electrical system would cross the National Electrical Code (NEC) threshold for new installations, which requires all electrical systems meet the 2011 NEC.

The existing electrical room is not isolated from general access, constructed of wood, and not fire-rated. The existing service drop does not meet current NEC requirements. The drop is overhead, travels over an existing roof, and enters the building without over-current protection or an exterior disconnecting means.

1.4.3.2 Recommendations

The existing electrical system is antiquated and reaching the end the expected life cycle for this type of facility. The electrical system is not eligible for salvage in connection with future expansion or renovation of the existing facility.

A new composite building systems structure for a fireproof electrical room with limited access should be constructed. The existing service drop should be replaced to meet current NEC requirements.

1.5 Life Safety and Fire Protection

1.5.1 Sprinklers and Standpipes

The buildings do not have sprinklers. There are two fire hydrants on the north side of White Street and two hydrants on United Street adjacent to school property.

1.5.2 Alarm System

There is an alarm system with pull stations, horn, and strobe devices and an intercom system throughout the facilities.

See photos #33 and 34 in Appendix B.

COPYRIGHT 2012 BY CH2M HILL, INC.

1.5.3 Fire Extinguishers

There are fire extinguishers throughout the facilities.

See photo #34 in Appendix B.

1.5.4 Smoke Detectors

There are smoke detectors at the top and bottom of the stairs in both Buildings A and B. No smoke detectors were observed in the auditorium, stage, closets, electrical rooms, storage rooms, restrooms, and classrooms.

See photo #35 in Appendix B.

1.5.5 Emergency Lighting

There is emergency lighting in the corridors of Buildings A and B, and in the auditorium. No emergency lights or emergency ballast were observed in the classrooms, restrooms, or offices.

See photos #36 and 37 in Appendix B.

1.5.6 Means of Egress

The path of travel to the exit doors was properly identified. Corridor walls and door along the means of egress are not rated. No UL labels were observed on the doors or frames. The steel stairs at the exits from the second floor are severely corroded.

See photos #38 and 39 in Appendix B.

1.5.7 Recommendation

Because of the proposed adaptive reuse of these buildings and the proposed new layout and classification, all new systems will be required. The design team will need to do a complete Life Safety Analysis and Code Search per NFPA and the Florida Building Code.

1.6 ADA Compliance

The facilities do not comply with Title III of the ADA Guidelines. The design team will be required to incorporate ADA Guidelines into the proposed new layout.

1.7 Environmental Conditions

CH2M HILL retained the services of EE&G Environmental Services, LLC (EE&G) to perform an inspection and testing for asbestos, lead, and mold in Buildings A, B, and C of the Glynn Archer School. The full reports are presented in Appendix D.

1.7.1 Asbestos

The inspection was conducted in June 2012 by AHERA-certified inspectors Rich Grupenhoff, Ramsey Abreu, Hiram Aguiar, and Sean Nemser of EE&G. Buildings A, B, and the Auditorium were constructed in the 1920s. They were observed to be constructed primarily of concrete, steel, and wood. Interior walls were observed to be finished with plaster and drywall. Ceilings were observed to be finished with laid-in ceiling tile, plaster and drywall. Floors were observed to be finished with vinyl floor tile, wood, and ceramic tile. The floor in the Auditorium was wood with linoleum. Building C, constructed in the 1950s, was of similar construction to the other buildings.

The classrooms, corridors, common areas, and roof areas were inspected for suspect ACM, unless otherwise noted. Each observed suspect material was assigned a homogenous area number, described, and measured. Each observed suspect material was either sampled or assumed to be asbestos-containing. Samples of suspect asbestos containing materials were collected using procedures established by the United States Environmental Protection

COPYRIGHT 2012 BY CH2M HILL, INC.

Agency (EPA) Code of Federal Regulations (CFR) Title 40 Part 763 Subpart E, Asbestos-Containing Materials in Schools.

Samples were sent to AAL in Tampa, Florida for analysis. Upon arrival at the laboratory, the samples were logged-in and stored for analysis. Analyses were performed using the polarized light microscopy method of asbestos detection, according to guidelines and procedures established in the Method for the Determination of Asbestos in Bulk Building Materials (EPA-600/R-93-116 July, 1993).

Asbestos was identified in amounts greater than 1 percent in the following materials:

Building A

Tan 12”x12” VFT mastic (2-5%C)
Black VFT (2-5%C)
Brown VFT (2-5%C)
Light Green 9”x9” VFT (2-5%C)
Green 12”x12” VFT (2-5%C)
Light Green VFT (2-5%C)
Cream 9”x9” VFT (2-5%C)
Green 9”x9” VFT (2-5%C)
Pink 9”x9” VFT (2-5%C)
Light Green 9”x9” VFT (2-5%C)
Black/Grey cap flashing/sealant (5-10%C)

Building B

Brown VFT (2-5%C)
Beige 12”x12” VFT mastic (2-5%C)
Black VFT (2-5%C)
Grey VFT (2-5%C)
Brown 9”x9” VFT (2-5%C) with black mastic (2-5%C)
Black VFT (2-5%C) with black mastic (2-5%C)
Red 9”x9” VFT (2-5%C) with black mastic (2-5%C)
White 9”x9” VFT (2-5%C) with black mastic (2-5%C)
Green 9”x9” VFT (5-10%C)

Building C

Grey 9”x9” VFT (2-5%C) with black mastic (5-10%C)
Green VFT (2-5%C) with black mastic (5-10%C)
Grey VFT (2-5%C) with black mastic (5-10%C)
Black roof curb wall counter flashing (5-10%C)

Auditorium

Tan pebble linoleum (20-25%C in paper backing)
Maroon VFT (2-5%C)

In general, these materials are found throughout the buildings; the location, quantity, and condition of these materials is detailed in the report. The asbestos was observed to be in a non-friable state. No action is required for these materials unless they are disturbed.

Full recommendations are included in the report. In general, the removal and disposal of asbestos containing material for the purposes of renovation must be performed by a Florida-licensed asbestos contractor.

1.7.2 Lead-Based Paint

Hiram Aguiar, EPA Lead-Based Paint Risk Assessor, of EE&G, conducted a limited Lead-Based Paint (LBP) inspection of Buildings A, B, Auditorium, and C at Glynn Archer Elementary School in June 2012. EE&G’s scope of work for this project consisted of evaluating the subject facility utilizing an X-Ray Fluorescence (XRF) instrument to assess for lead concentrations in selected painted building components.

COPYRIGHT 2012 BY CH2M HILL, INC.

The Department of Housing and Urban Development defines LBP as paints or coatings with lead concentrations equal to or greater than 1.0 mg/cm^2 when measured by XRF. Paints used throughout the facility on interior and exterior walls, doors, and trim in Buildings A, B, and the Auditorium tested positive by XRF for lead-based paint. The testing of the paints in Building C did not indicate the presence of lead.

CH2M HILL recommends that LBP that has become damaged should be abated during any renovations. Any abatement procedure in which LBP is disturbed should be conducted by trained personnel and in accordance with all federal, state, and local regulations, including OSHA's lead regulation, 29 CFR 1926.62. Also, prior to disposal, the entire waste stream from LBP abatement (paint, rags, protective suits, debris, etc.) must be characterized by a Toxic Characteristic Leachate Procedure (TCLP) test. The EPA requires TCLP testing to determine if the waste is considered hazardous.

Full recommendations for abatement during renovations and/or demolition are presented in the report in Appendix D.

1.7.3 Mold

EE&G inspected the building for the presence of suspect mold growth during the onsite inspection in July 2012. In general, the construction materials used in the buildings, wood, plaster, metals, and concrete do not typically support mold growth in indoor environments. Little suspected mold growth was observed throughout the buildings, except in areas where water leaks were noted. For example, in the outdoor corridor ceiling on the southern side of the Auditorium, water damage from and apparent roof leak was noted, with subsequent mold growth on the wood ceiling material.

CH2M HILL recommends that any suspect mold growth be removed during demolition or renovation.

A full report on the mold growth found in the buildings is presented in Appendix D.

COPYRIGHT 2012 BY CH2M HILL, INC.

Appendix A
Plans and Sketches

Plans

ZONING SITE PLAN DATA:

	REQUIRED LDR	PROVIDED
ZONING DESIGNATION	HPS.	
LOT SIZE	114,472/SQ.FT.	132,155/SQ.FT.
SET BACKS		
FRONT	20'	25'(+/-)
STREETSIDE	10'	20'(+/-)
REAR	20'/15% OF LOT DEPTH	OVER 200' (+/-)
SIDE	5'	5' (+/-)
MAXIMUM FAR	1.0	0.55
MAXIMUM BUILDING COVER	40% (52,988 SF)	21.8% (28,840 SF)
MAXIMUM IMPERVIOUS SURFACE: (NOTE: TRAVEL LANES ARE IMPERVIOUS, SPACES ARE 50% IMPERVIOUS)	50% (66,236 SF)	49.2% (65,000 SF +/-)

PARKING

LDR RATIO: OFFICE USES: 1/20 / STORAGE MAINTENANCE USES: 8 / TOTAL 128 CARS
: AUDITORIUM: 40 SPACES, HOWEVER CODE ALLOWS JOINT USE
TOTAL IF JOINT USE IS NOT RECOGNIZED IS 168 CARS
BICYCLES @ 15% = 64 / OR 84

PROVIDED: (NOTE: PARKING MAY BE REDUCED IN LIEU OF ADDITIONAL LANDSCAPE)

FULLSIZE SPACES	124
COMPACT SPACES	20
ON STREET, 30 MINUTE TIME LIMIT	6
HANDICAP SPACES	6
TOTAL	156
PLUS (1) LOADING SPACE @ 12' x 50'	
BICYCLES: 180 LIN.FT. SHOWN ÷ 2'/BIKE	65

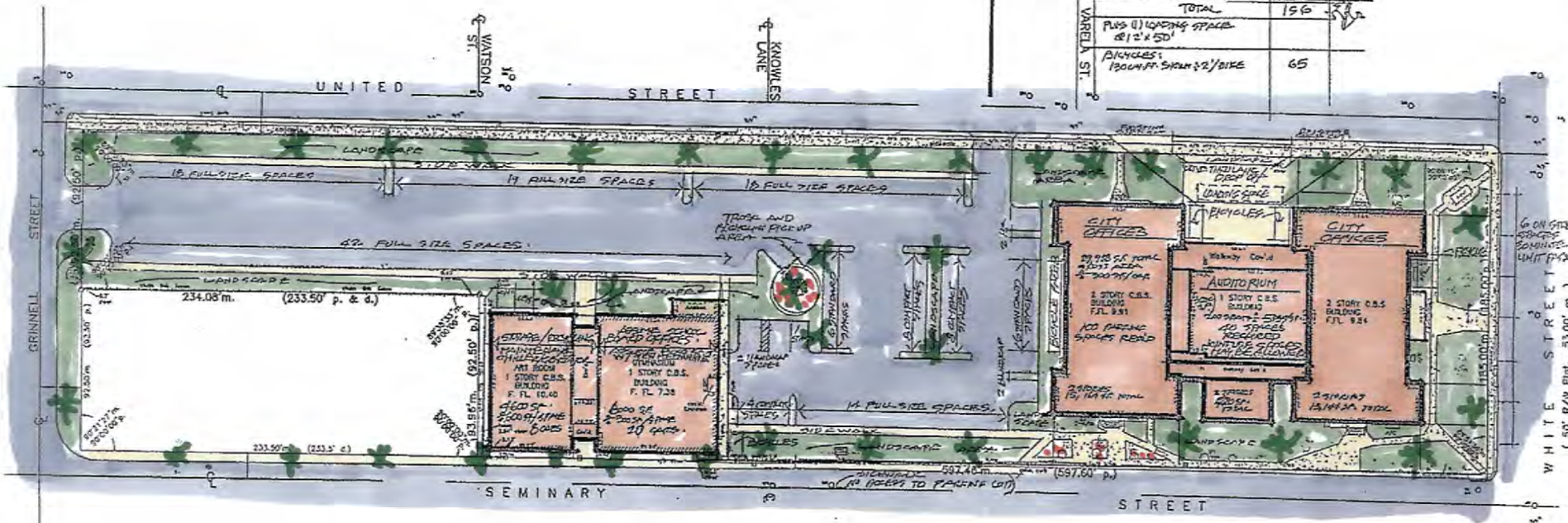

SCHEMATIC SITE PLAN — 1" = 30'

GLYNN ARCHER SCHOOL
WHITE STREET
KEY WEST, FLORIDA

410 Amelia Street
Key West, Florida 33040
Telephone (305) 296-1313
Facsimile (305) 296-2777
Florida License #AR0009272
Bender & Associates ARCHITECTS P.A.

Project No. 1026
Date: 5/29/98

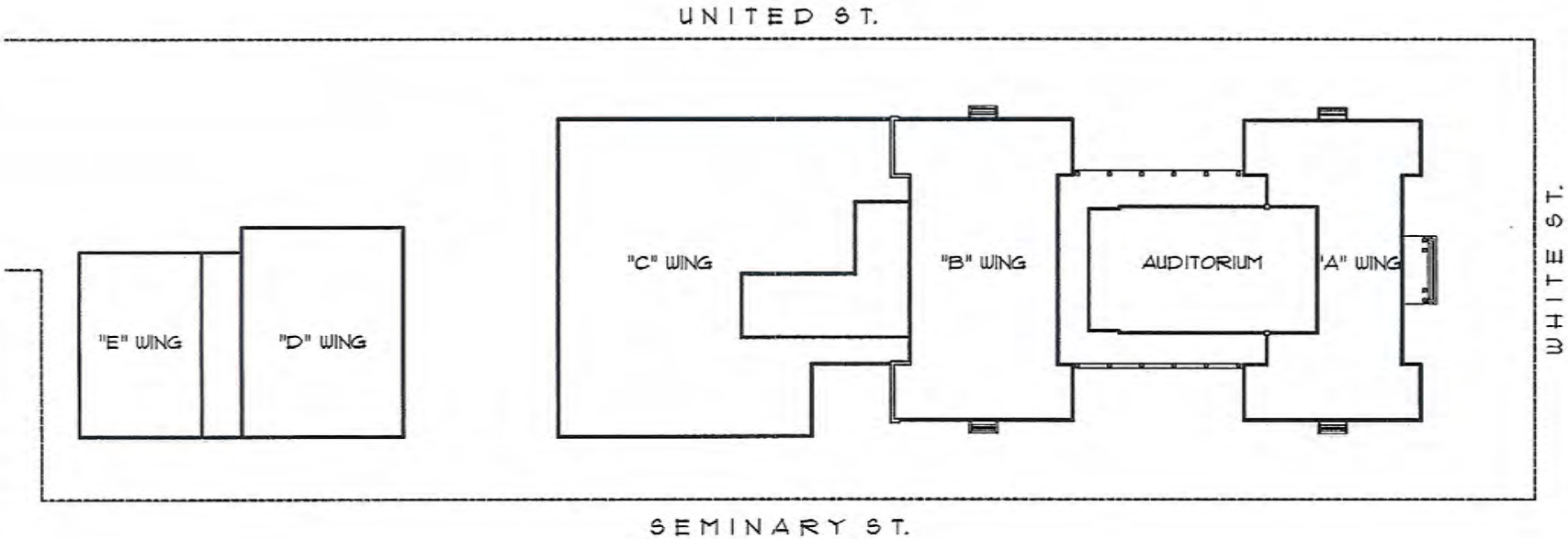

Site Plan

N.T.S.

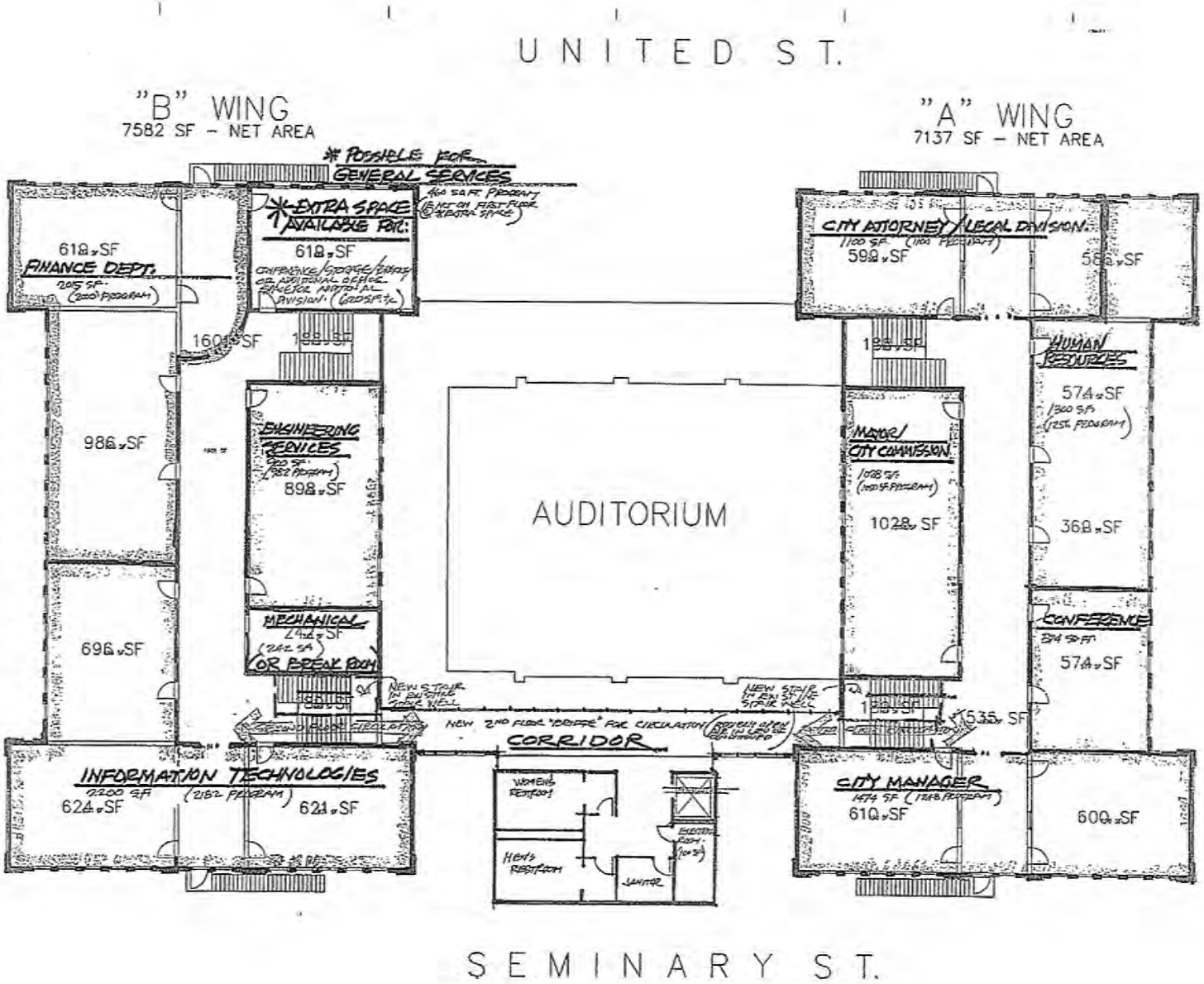

1 SECOND FLOOR PLAN
A2 SCALE: 1/8"=1'-0"

GLYNN ARCHER SCHOOL
WHITE STREET
KEY WEST FLORIDA 33040

Bender & Associates ARCHITECTS P.A.

A2
2 OF 2

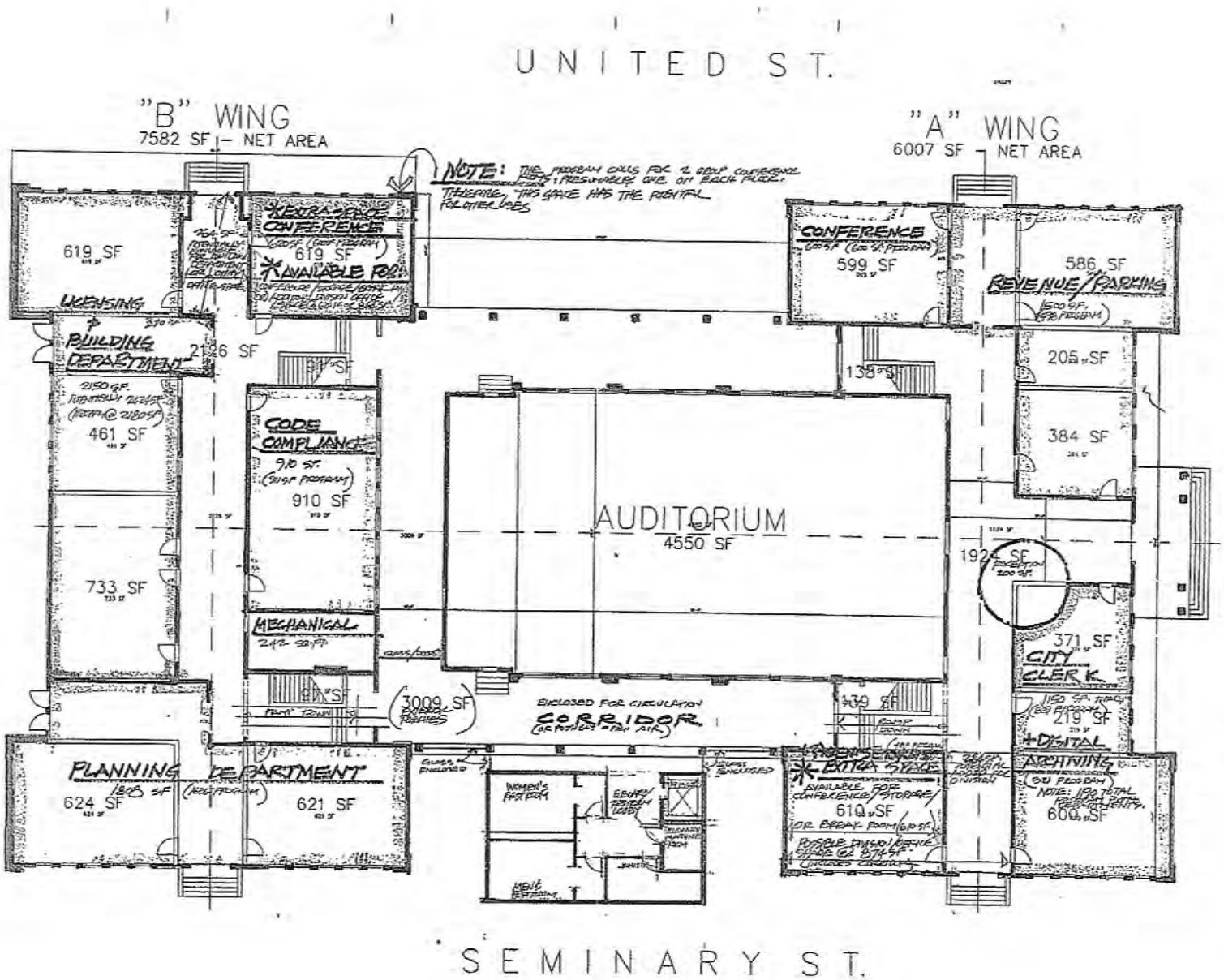

1 FIRST FLOOR PLAN
A1 SCALE: 1/8"=1'-0"

SEMINARY ST.

GLYNN ARCHER SCHOOL
WHITE STREET
KEY WEST FLORIDA 33040

Bender & Associates ARCHITECTS

FIRST FLOOR PLAN

A1
1 OF 2

Sketches

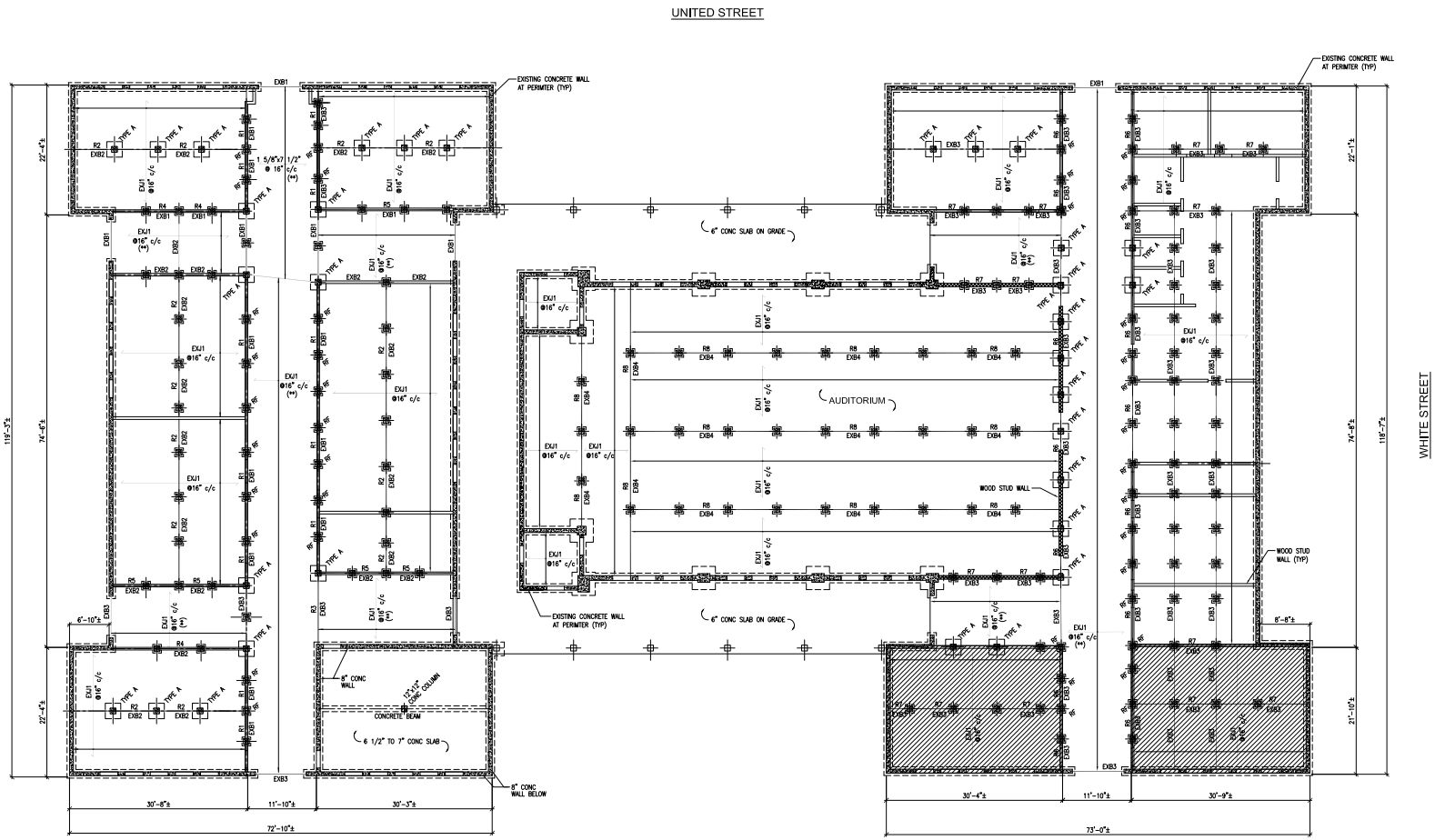

FOUNDATION AND FIRST FLOOR PLAN - A & B WING
1/8"=1'-0"

NORTH

NOTES:

1. TOP OF EXISTING FLOOR SHEATHING APPROXIMATE ELEVATION +3'-0"± IS REFERENCED FROM EXISTING GRADE.
2. THE STRUCTURAL FRAMING LAYOUT IS A GENERAL SURVEY OF THE EXISTING STRUCTURAL MEMBERS, BASED ON SEVERAL OBSERVATION ACCESS HOLES. THE EXACT CONDITIONS, ELEVATIONS, LOCATIONS, AND SIZE OF THE STRUCTURAL MEMBERS MUST BE FIELD DETERMINED FOR THE FINAL DESIGN.
3. THE DIMENSIONS AND ELEVATIONS ARE SHOWN ON THE PLAN FOR REFERENCE, THE EXACT DIMENSIONS AND ELEVATIONS MUST BE FIELD VERIFIED FOR FINAL DESIGN.
4. (**) INDICATES EXISTING WOOD FLOOR JOIST AND ROOF TRUSS / RAFTER REQUIRED REINFORCEMENT.
5. "CB" INDICATES WOOD POST BELOW THE FLOOR FRAMING.
6. UNLESS NOTED OTHERWISE, BEAMS DO NOT REQUIRE ADDITIONAL REINFORCEMENT. NOTATION " n " FOLLOWED BY A NUMBER CORRESPONDS TO REQUIRED BEAM REINFORCEMENT. FOR REINFORCEMENT SCHEDULE AND DETAILS , REFER TO SKETCH SK-10.
7. " RF " INDICATES EXISTING CONCRETE FOOTING WITH ADDITIONAL REINFORCEMENT AND ENLARGED BEARING SURFACE AREA.
8. INTERIOR WALLS CONSIST OF 1 5/8" x 5 1/2" WOOD STUD WALL.

PROVIDE 15/32" THICK PLYWOOD SHEATHING, GRADE DOC PS1 AND PS2 WITH 10d (3x0.131#) NAILS PENETRATE 1 1/2" INTO FRAMING, SPACED AT 4" c/c PANEL EDGE AND 6" c/c FIELD.

TYPE 'A' - 32"x32" EXISTING CONCRETE FOOTING
ALL OTHER EXISTING FOOTINGS ARE 18"x18"

EXISTNG FLOOR FRAMING SCHEULE	
MARK	EXISTING MEMBER SIZES
EXB1	4-1 5/8"x7 1/2"
EXB2	2-1 5/8"x7 1/2"
EXB3	5 1/2"x7 1/2"
EXB4	5 3/4"x5 5/8"
EXJ1	1 5/8" x 7 1/2"

REV. #	DATE	DESCRIPTION

PROJECT

GLYNN ARCHER SCHOOL
1300 WHITE STREET
KEY WEST - FLORIDA

Halcrow Yolles
22 Courtlandt Street
3rd Floor New York, NY 10007
tel +1 212 608 3860
contact.us@halcrowyolles.com
halcrowyolles.com

Halcrow Yolles

© 2012 Halcrow Yolles. Must be returned upon request. The contents of these drawings, specifications, reports, documents and designs is work or in part is strictly forbidden, without the prior written permission of Halcrow Yolles.

SHEET TITLE

FOUNDATION / FIRST FLOOR FRAMING PLAN

PROJ. MANAGER: PDS

ARCHITECT/ENGINEER: ALC/MIA

DRAWN BY: DCB

PROJECT NO.

DWG. NO.: S-200

XRefs:
Titleblock.dwg

Plot Time: 2012, Aug 17 - 3:49pm
Drawing Name: \\Vyo-fs-01.amr.ch2m.com\admin\VH-New York\Projects\2012\58571 REDAUV Glynn Archer School, Key West, FL\7 Drawings CAD M3200.00_Foundation and First Floor Framing Plan.dwg

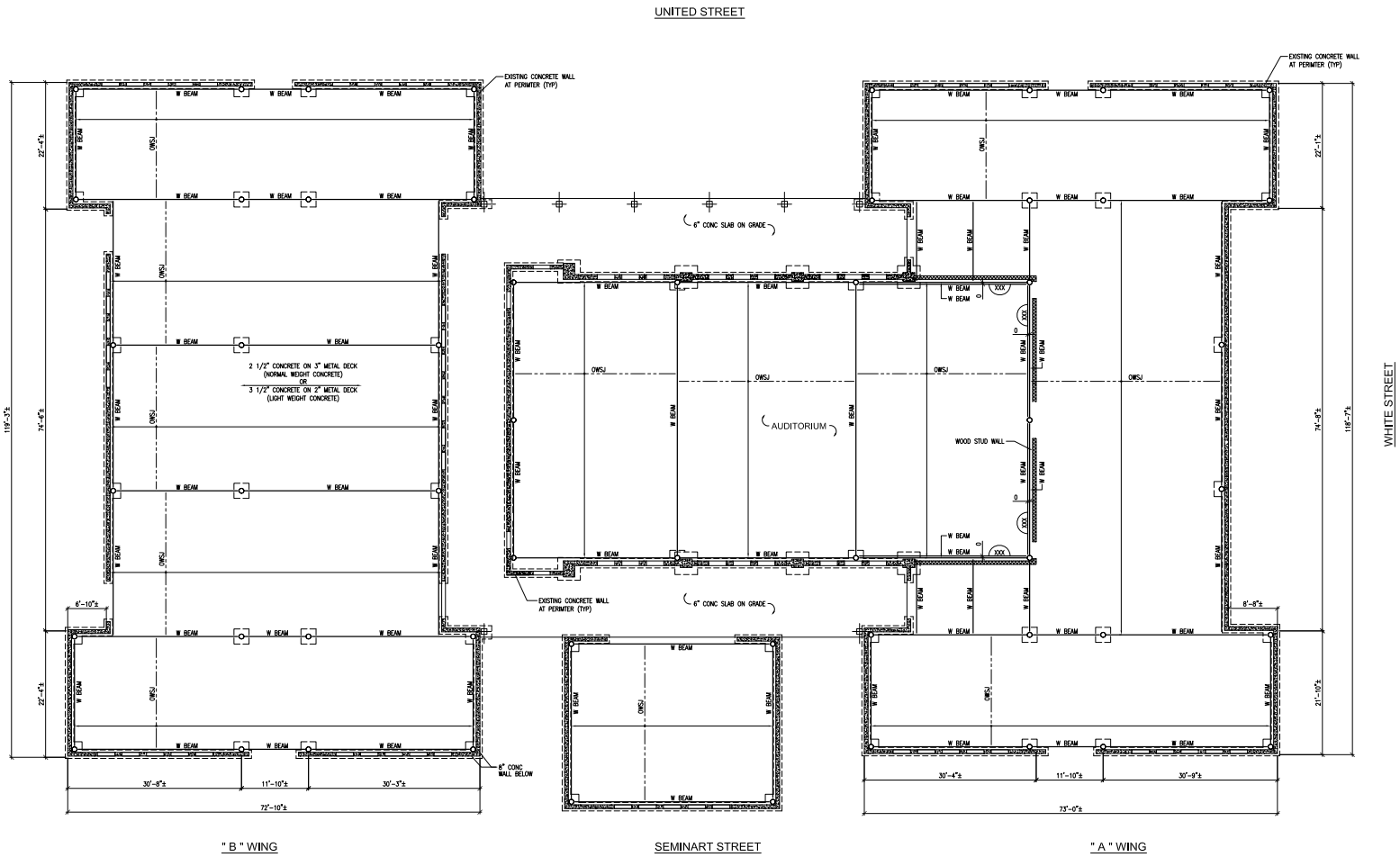

ALTERNATE FIRST FLOOR FRAMING PLAN - BLUE SKY APPROACH
1/8"=1'-0"

NORTH

NOTES:

1. LATERAL: MOMENT FRAMES OR
   "X"-BRACING ON PERIMETER OR
   "X" OR "Y" BRACING ON PERIMETER
2. TEMPORARY ACCESS FOR DRILL RIGS TO BE PLANNED.
3. ACP'S CAN BE PULLED PROUD OF WALLS WITH GB SYSTEM.
4. 54 PILE LOCATIONS HAVE BEEN SHOWN. A MODIFIED FRAMING PLAN CAN REDUCE THE NUMBER OF PILES REQUIRED TO 46 PILE LOCATIONS.
5. OWSJ INDICATES OPEN WEB STEEL JOIST.

REV. #	DATE	DESCRIPTION

PROJECT

GLYNN ARCHER SCHOOL
1300 WHITE STREET
KEY WEST - FLORIDA

Halcrow Yolles
22 Courtlandt Street
3rd Floor New York, NY 10007
tel +1 212 608 3990
contact.us@halcrowyolles.com
halcrowyolles.com

Halcrow Yolles

© 2012 Halcrow Yolles. Not to scale unless noted. Reproduction of this drawing, specifications, other documents and designs in whole or in part without written consent and permission of Halcrow Yolles is strictly forbidden.

SHEET TITLE

ALTERNATE FIRST FLOOR FRAMING PLAN - BLUE SKY APPROACH

PROJ. MANAGER: PDS

ARCHITECT/ENGINEER: ALC/MIA

DRAWN BY: DCB

PROJECT NO.

DWG. NO.: S-200A

XRefs: Titleblock.dwg

Plot Time: 2012, Aug 29 - 3:48pm
Drawing Name: \\yyc-fs-01\Admin\Hr-New York\Projects\2012\28571 REDAAV Glynn Archer School, Key West, FL\7 Drawings\7 Drawings CAD files: Info\Sheet200A.00_Foundation and First Floor Framing Plan.dwg

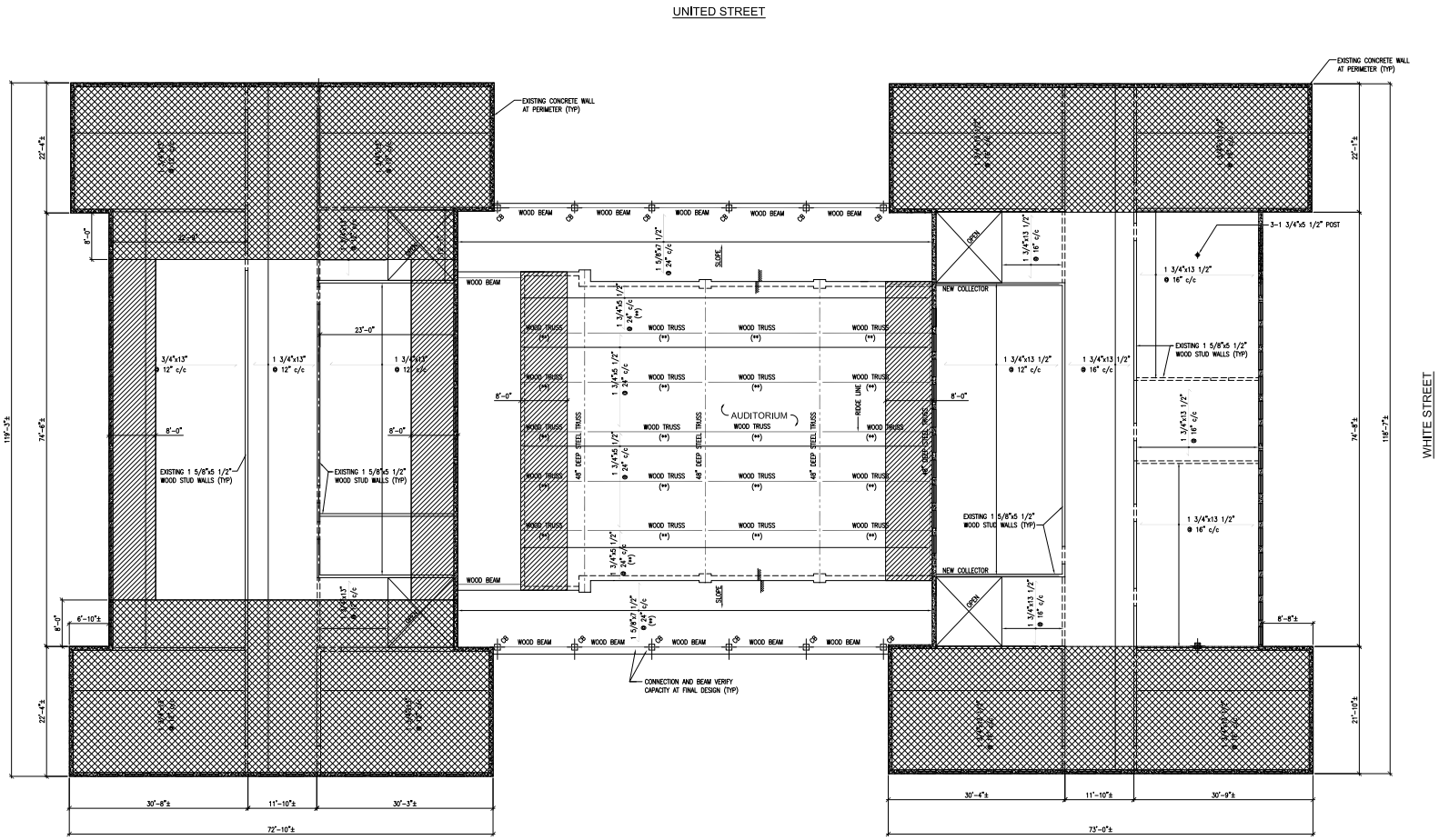

SECOND FLOOR FRAMING PLAN - A & B WING

1/8"=1'-0"

NORTH

NOTES:

1. TOP OF EXISTING FLOOR SHEATHING APPROXIMATE ELEVATION +17'-1 3/4"± IS REFERENCED FROM EXISTING GRADE.
2. THE STRUCTURAL FRAMING LAYOUT IS A GENERAL SURVEY OF THE EXISTING STRUCTURAL MEMBERS, BASED ON SEVERAL OBSERVATION ACCESS HOLES. THE EXACT CONDITIONS, ELEVATIONS, LOCATIONS, AND SIZE OF THE STRUCTURAL MEMBERS MUST BE FIELD DETERMINED FOR THE FINAL DESIGN.
3. THE DIMENSIONS AND ELEVATIONS ARE SHOWN ON THE PLAN FOR REFERENCE, THE EXACT DIMENSIONS AND ELEVATIONS MUST BE FIELD VERIFIED FOR FINAL DESIGN.
4. (**) INDICATES EXISTING WOOD FLOOR JOIST AND ROOF TRUSS / RAFTER REQUIRED REINFORCEMENT.
5. "CB" INDICATES WOOD POST BELOW THE FLOOR FRAMING.

PROVIDE 15/32" THICK PLYWOOD SHEATHING, GRADE DOC PS1 AND PS2 WITH 10d (3x0.131ø) NAILS PENETRATE 1 1/2" INTO FRAMING, SPACED AT 4" c/c PANEL EDGE AND 4" c/c FIELD.

PROVIDE 15/32" THICK PLYWOOD SHEATHING, GRADE DOC PS1 AND PS2 WITH 10d (3x0.131ø) NAILS PENETRATE 1 1/2" INTO FRAMING, SPACED AT 2 1/2" c/c PANEL EDGE AND 4" c/c FIELD.

REV. #	DATE	DESCRIPTION

PROJECT

GLYNN ARCHER SCHOOL
1300 WHITE STREET
KEY WEST - FLORIDA

Halcrow Yolles
22 Courtlandt Street
3rd Floor New York, NY 10007
tel +1 212 608-3860
contact.us@halcrowyolles.com
halcrowyolles.com
Halcrow Yolles

© 2012 Halcrow Yolles. Must be returned upon request. Reproductions of these drawings, specifications, related documents and designs in whole or in part or partially fabricated, without the prior written permission of Halcrow Yolles.

SHEET TITLE

SECOND FLOOR FRAMING PLAN

PROJ. MANAGER: PDS

ARCHITECT/ENGINEER: ALC/MIA

DRAWN BY: DCB

PROJECT NO.

DWG. NO. S-201

XRefs:
Titleblock.dwg

Plot Time: 2012, Aug 17 -- 3:42pm
Drawing Name: \\Vpn-fs-orlando\Jobs\NY-New York\Projects\2012\35971 REDAIV Glynn Archer School, Key West, FL\7 Drawings\7 Drawings CAD\35971-00_Second Floor Framing Plan.dwg

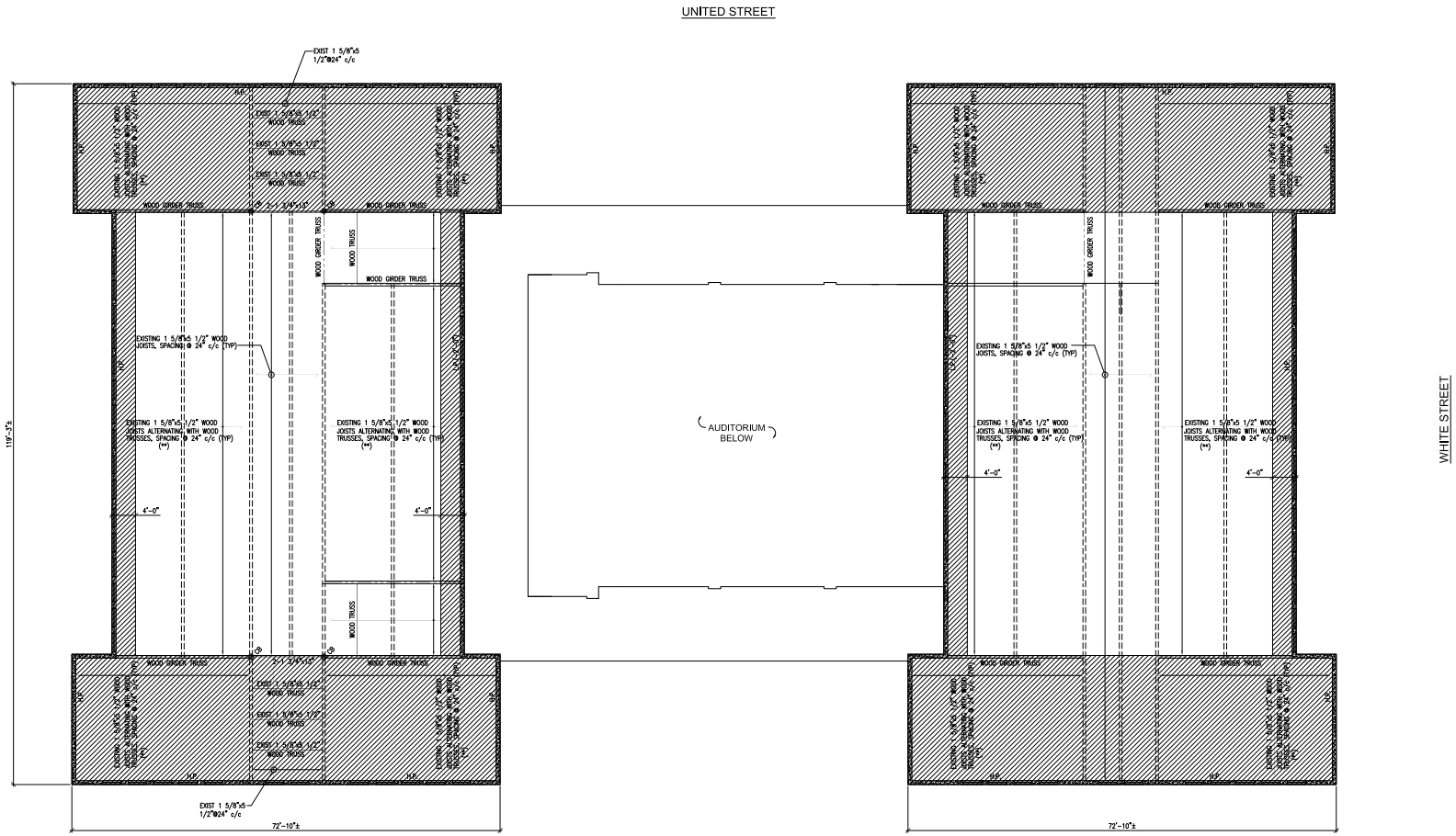

ROOF FRAMING PLAN - A & B WING

1/8"=1'-0"

NORTH

NOTES:

1. TOP OF EXISTING FLOOR SHEATHING APPROXIMATE ELEVATION +33'-3 1/2"± IS REFERENCED FROM EXISTING GRADE, EXCEPT AS NOTED ("-**") TO BE READ FROM ELEVATION +33'-3 1/2"±.
2. THE STRUCTURAL FRAMING LAYOUT IS A GENERAL SURVEY OF THE EXISTING STRUCTURAL MEMBERS, BASED ON SEVERAL OBSERVATION ACCESS HOLES. THE EXACT CONDITIONS, ELEVATIONS, LOCATIONS, AND SIZE OF THE STRUCTURAL MEMBERS MUST BE FIELD DETERMINED FOR THE FINAL DESIGN.
3. THE DIMENSIONS AND ELEVATIONS ARE SHOWN ON THE PLAN FOR REFERENCE, THE EXACT DIMENSIONS AND ELEVATIONS MUST BE FIELD VERIFIED FOR FINAL DESIGN.
4. (**) INDICATES EXISTING WOOD FLOOR JOIST AND ROOF TRUSS / RAFTER REQUIRED REINFORCEMENT.

LEGEND:

=== - INDICATES EXISTING 2x WOOD POSTS AT EACH WOOD TRUSS

CB - INDICATES EXISTING WOOD POST BELOW

H.P. - INDICATES HIGH POINT AT ROOF SURFACE

L.P. - INDICATES LOW POINT AT ROOF SURFACE

EXTENT OF MEMBER

MEMBER SPAN

PROVIDE 15/32" THICK PLYWOOD SHEATHING, GRADE DOC PS1 AND PS2 WITH 10d (3x0.131@) NAILS PENETRATE 1 1/2" INTO FRAMING, SPACED AT 4" c/c PANEL EDGE AND 6" c/c FIELD.

REV. #	DATE	DESCRIPTION

PROJECT

GLYNN ARCHER SCHOOL
1300 WHITE STREET
KEY WEST - FLORIDA

Halcrow Yolles
22 Courtlandt Street
3rd Floor New York, NY 10007
tel +1 212 608-3860
contact.us@halcrowyolles.com
halcrowyolles.com

Halcrow Yolles

© 2012 Halcrow Yolles. Must be returned upon request. Reproduction of these drawings, specifications, related documents and designs in whole or in part or partially facilitated without the prior written permission of Halcrow Yolles.

SHEET TITLE

ROOF FRAMING PLAN

PROJ. MANAGER: PDS

ARCHITECT/ENGINEER: ALC/MIA

DRAWN BY: DCB

PROJECT NO.

DWG. NO. S-202

XRefs:
Titleblock.dwg

Plot Time: 2012, Aug 17 - 3:46pm
Drawing Name: \\fyp-ny-cluster.com\admin\VH-New York\Projects\2012\58571 REDAW Glynn Archer School, Key West, FL\7 Drawings CAD MS2012.00_Roof Framing Plan.dwg

Yolles | A CH2M HILL Company

Project: GLYNN ARCHER SCHOOL				Project No.	No. SK-S1
Design: MIA	Drawn: DCB	Checked: PDS	Date: August 2012	W.P. No.	Scale NTS
Subject: EXTERIOR WALL SECTION				Reference	

READ THIS SKETCH IN CONJUNCTION WITH STRUCTURAL DRAWINGS AND OTHER CONTRACT DOCUMENTS

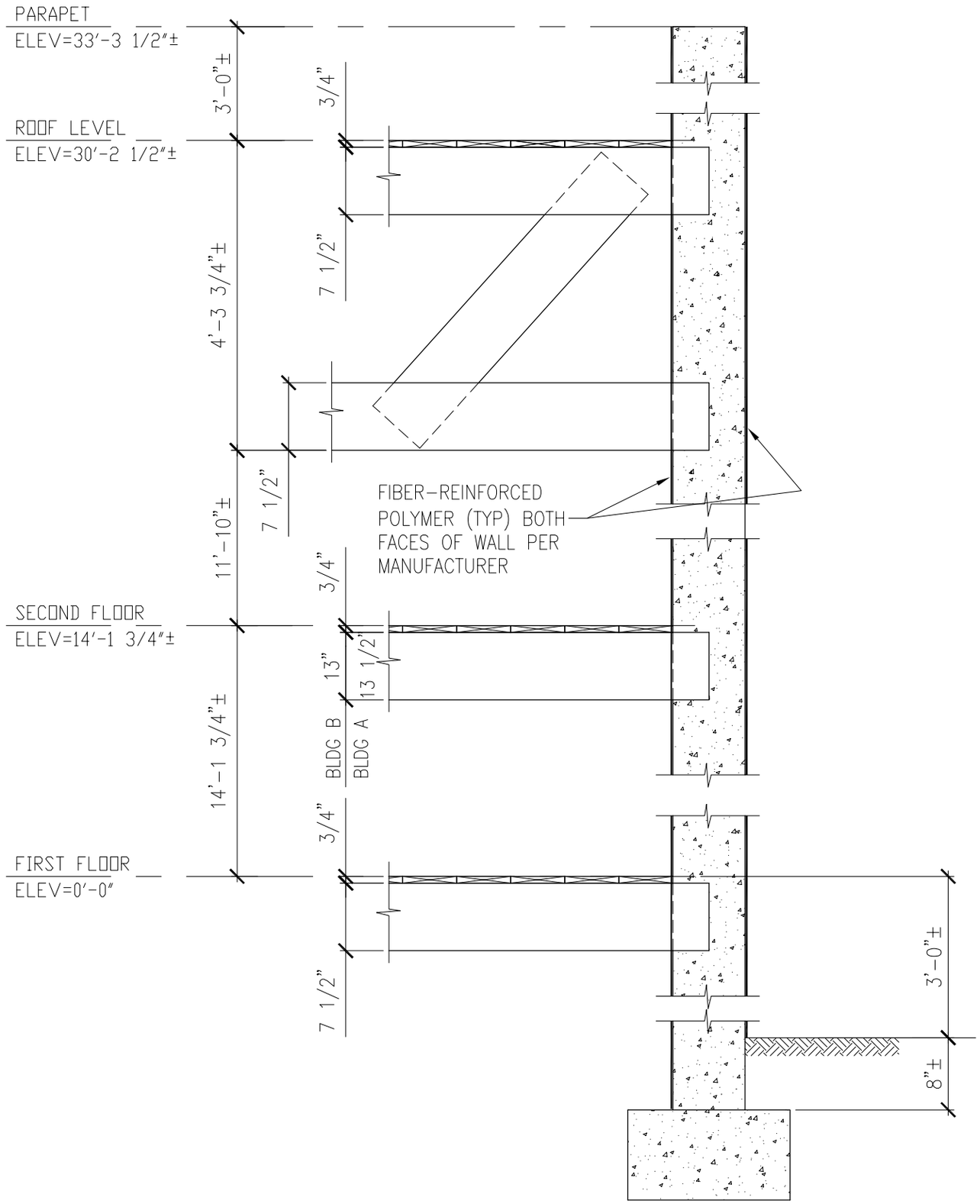

Yolles | A CH2M HILL Company

Project: GLYNN ARCHER SCHOOL				Project No.	No. SK-S2
Design: A.CHAN	Drawn: DCB	Checked: PDS	Date: August 2012	W.P. No.	Scale 3/4"=1'-0"
Subject: WOOD BEAM CONNECTION TO CONCRETE PIER				Reference	

READ THIS SKETCH IN CONJUNCTION WITH STRUCTURAL DRAWINGS AND OTHER CONTRACT DOCUMENTS

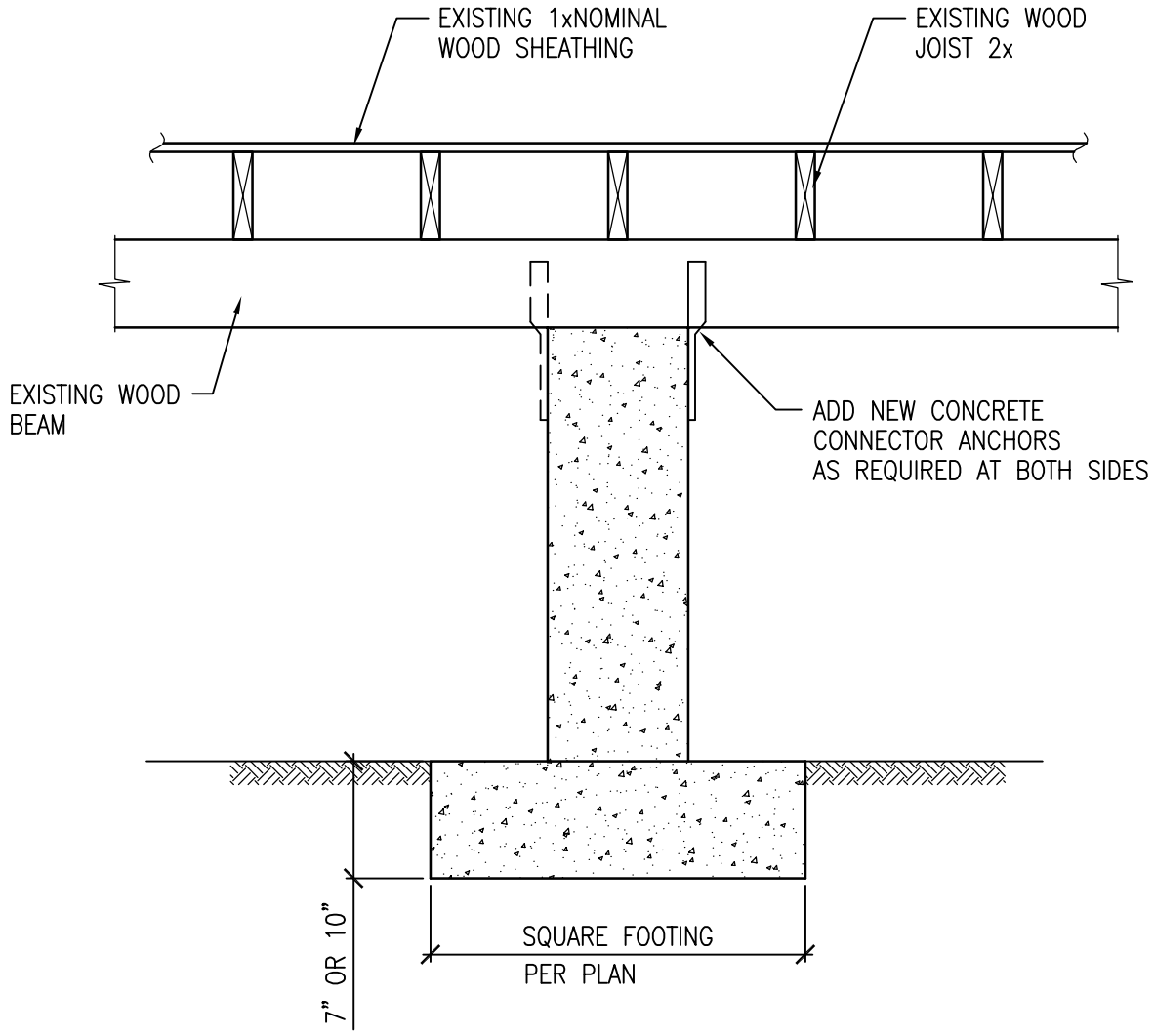

Yolles | A CH2M HILL Company

Project: GLYNN ARCHER SCHOOL				Project No.	No. SK-S3
Design: A.CHAN	Drawn: DCB	Checked: PDS	Date: August 2012	W.P. No.	Scale 3/4"=1'-0"
Subject: FIRST FLOOR - MULTI SPAN JOIST REINFORCEMENT				Reference	

READ THIS SKETCH IN CONJUNCTION WITH STRUCTURAL DRAWINGS AND OTHER CONTRACT DOCUMENTS

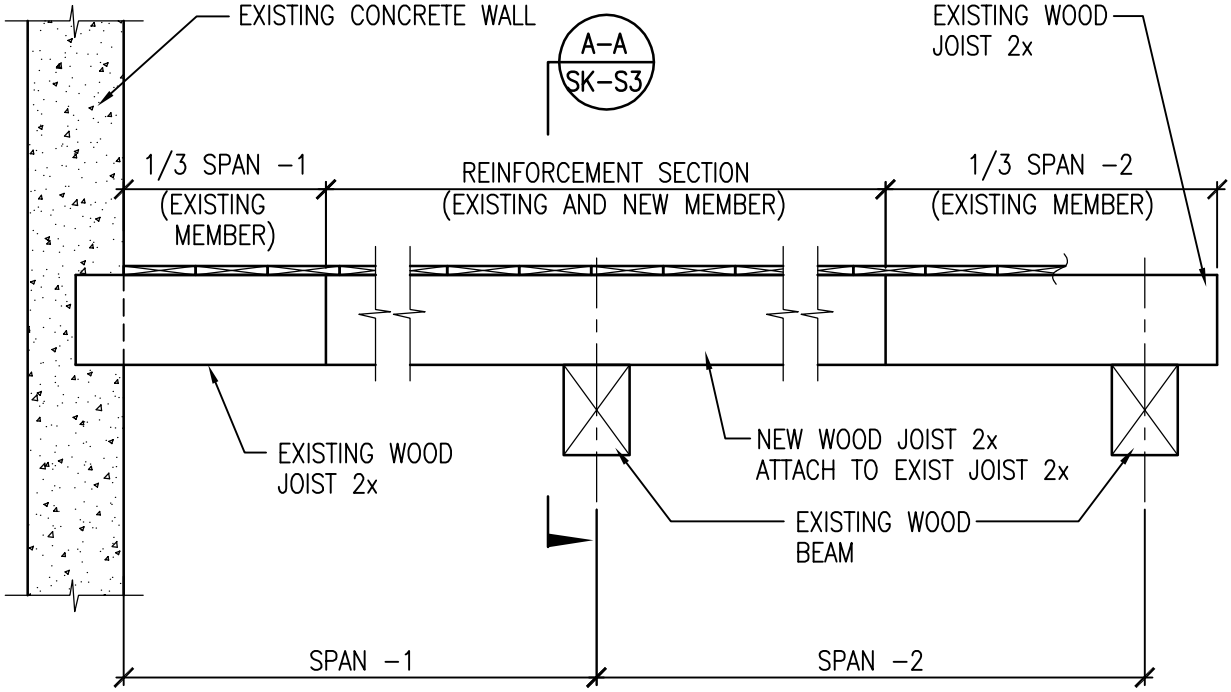

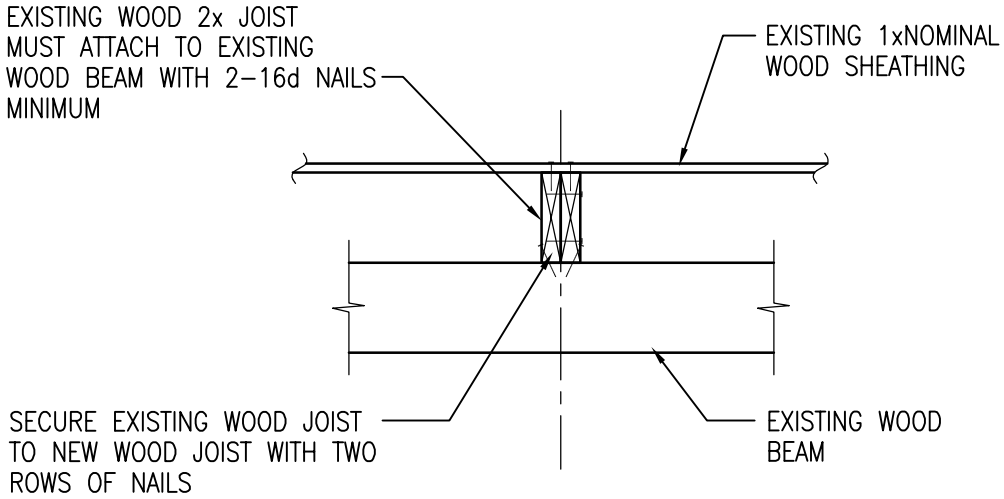

SECTION A-A

Yolles | A CH2M HILL Company

Project: GLYNN ARCHER SCHOOL				Project No.	No. SK-S4
Design: A.CHAN	Drawn: DCB	Checked: PDS	Date: August 2012	W.P. No.	Scale 3/4"=1'-0"
Subject: FIRST FLOOR - SINGLE SPAN JOIST REINFORCEMENT				Reference	

READ THIS SKETCH IN CONJUNCTION WITH STRUCTURAL DRAWINGS AND OTHER CONTRACT DOCUMENTS

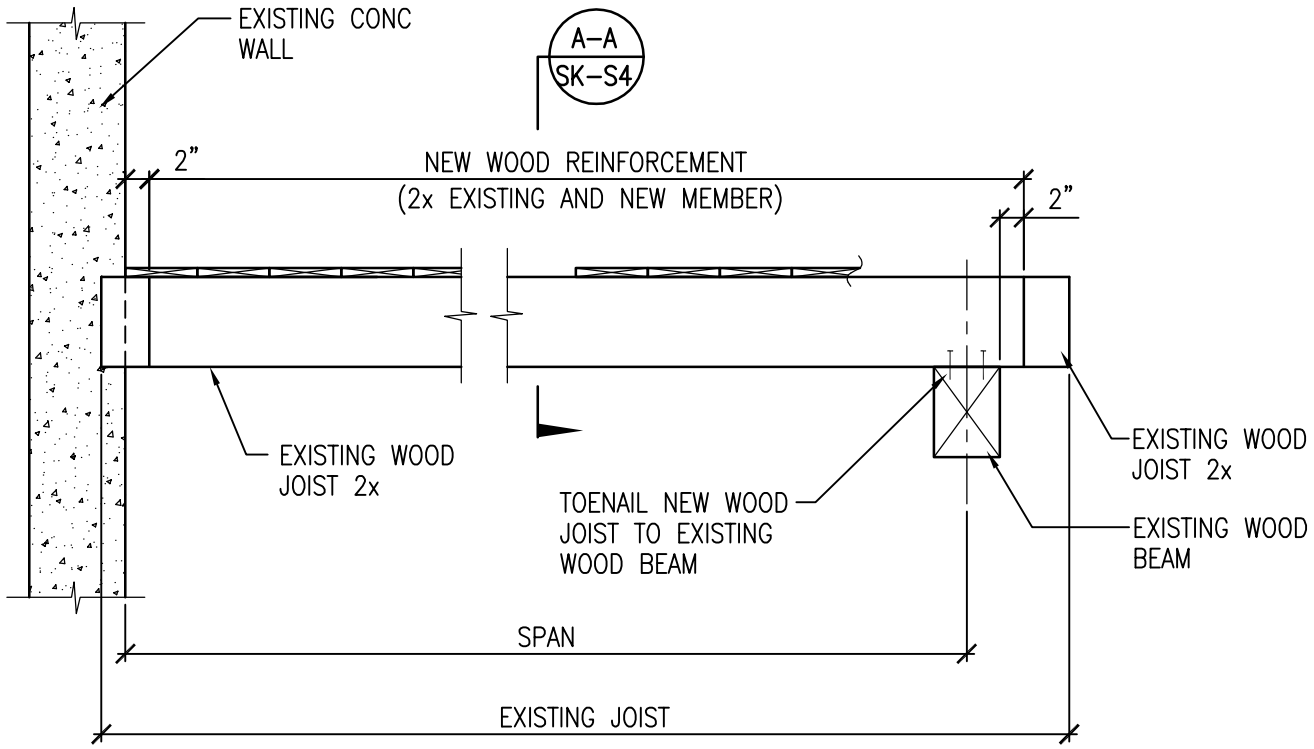

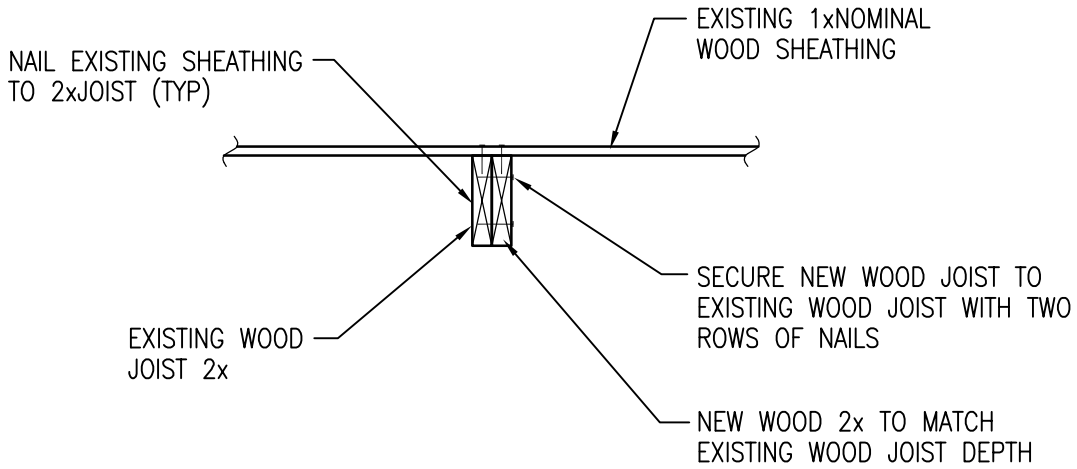

SECTION A-A

Yolles | A CH2M HILL Company

Project: GLYNN ARCHER SCHOOL				Project No.	No. SK-S5
Design: A.CHAN	Drawn: DCB	Checked: PDS	Date: August 2012	W.P. No.	Scale 3/4"=1'-0"
Subject: SECOND FLOOR - JOIST PARALLEL TO WALL ANCHORAGE				Reference	

READ THIS SKETCH IN CONJUNCTION WITH STRUCTURAL DRAWINGS AND OTHER CONTRACT DOCUMENTS

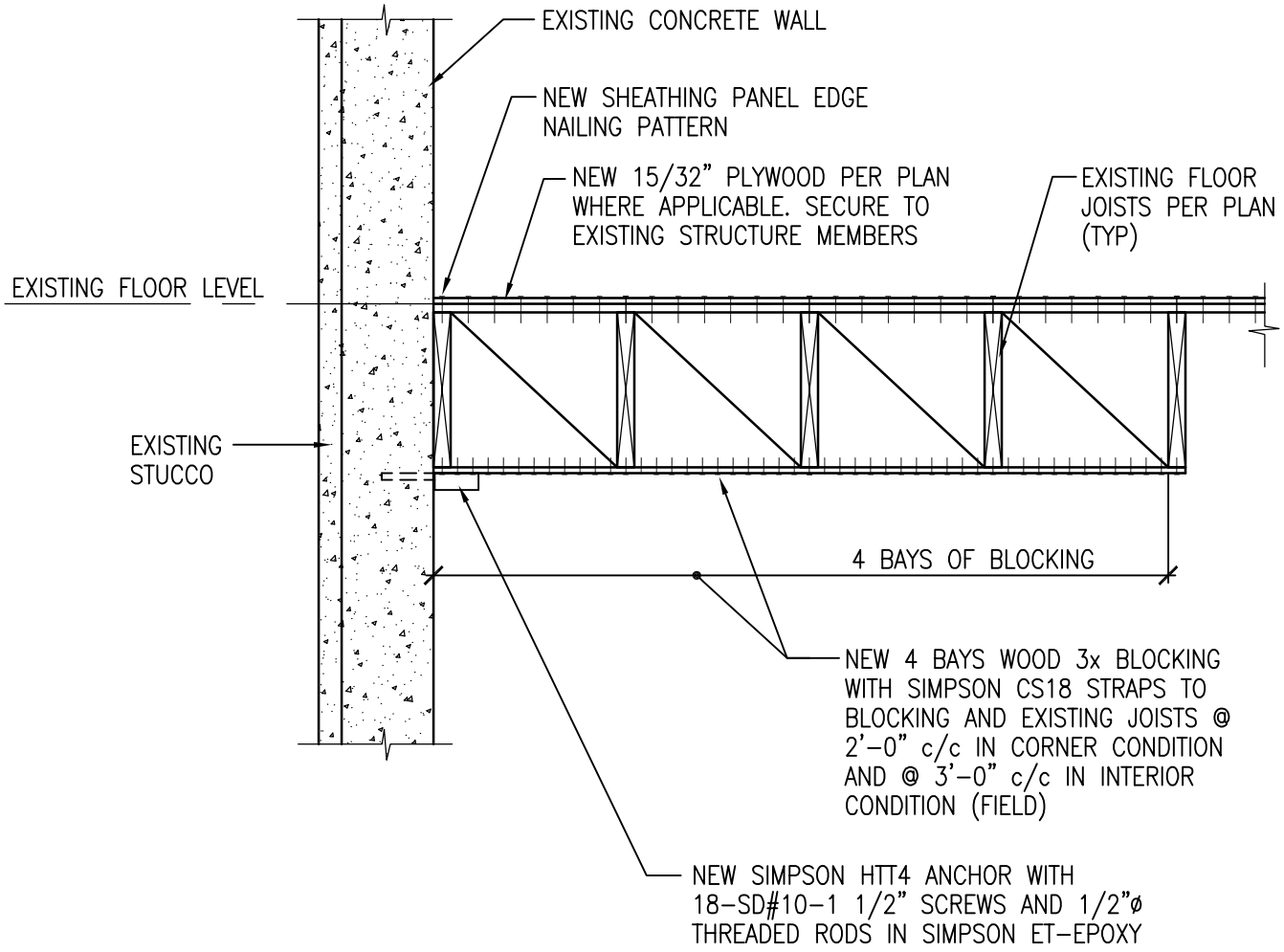

Yolles | A CH2M HILL Company

Project: GLYNN ARCHER SCHOOL				Project No.	No. SK-S6
Design: A.CHAN	Drawn: DCB	Checked: PDS	Date: August 2012	W.P. No.	Scale 3/4"=1'-0"
Subject: SECOND FLOOR - JOIST PERPENDICULAR TO WALL ANCHORAGE				Reference	

READ THIS SKETCH IN CONJUNCTION WITH STRUCTURAL DRAWINGS AND OTHER CONTRACT DOCUMENTS

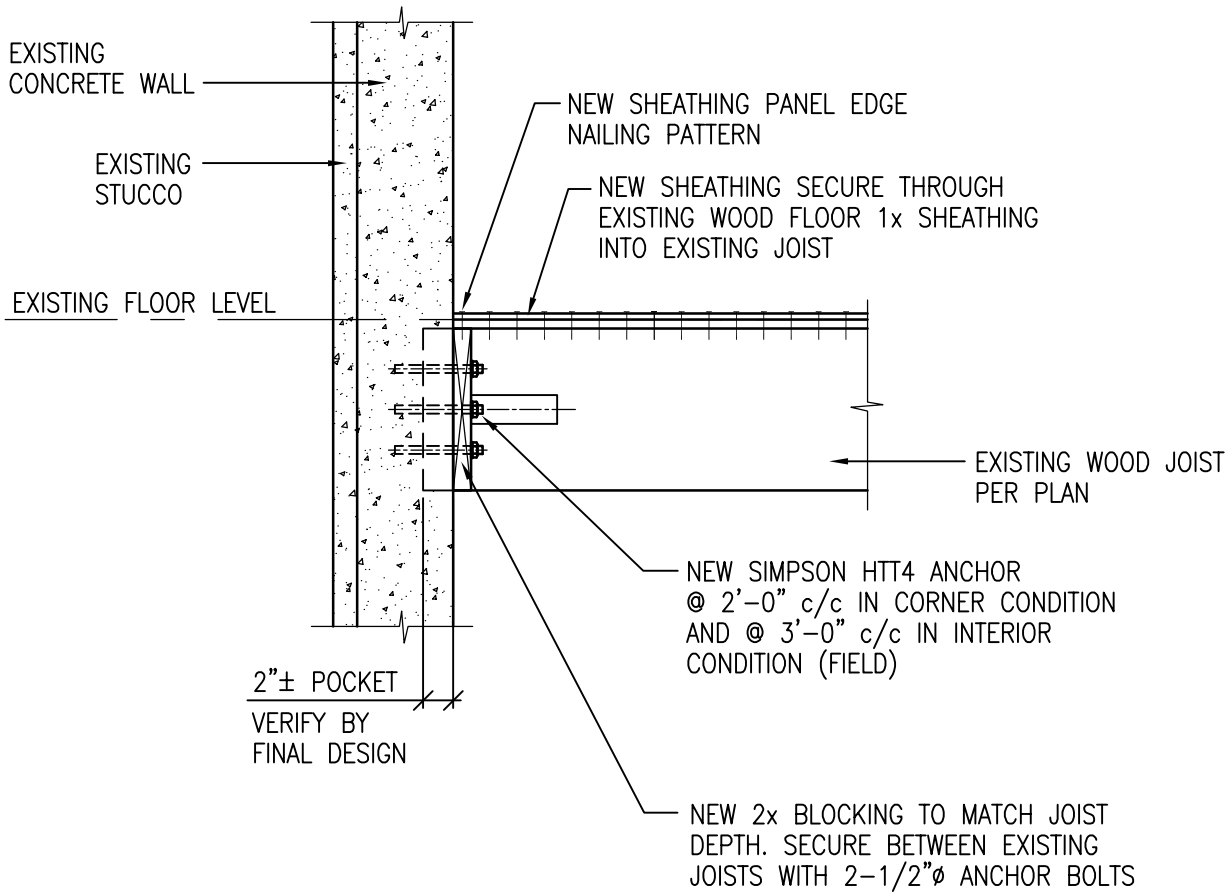

Yolles | A CH2M HILL Company

Project: GLYNN ARCHER SCHOOL				Project No.	No. SK-S7
Design: A.CHAN	Drawn: DCB	Checked: PDS	Date: August 2012	W.P. No.	Scale 3/4"=1'-0"
Subject: ROOF - JOIST / TRUSS PERPENDICULAR TO WALL DIAPHRAGM ANCHORAGE				Reference	

READ THIS SKETCH IN CONJUNCTION WITH STRUCTURAL DRAWINGS AND OTHER CONTRACT DOCUMENTS

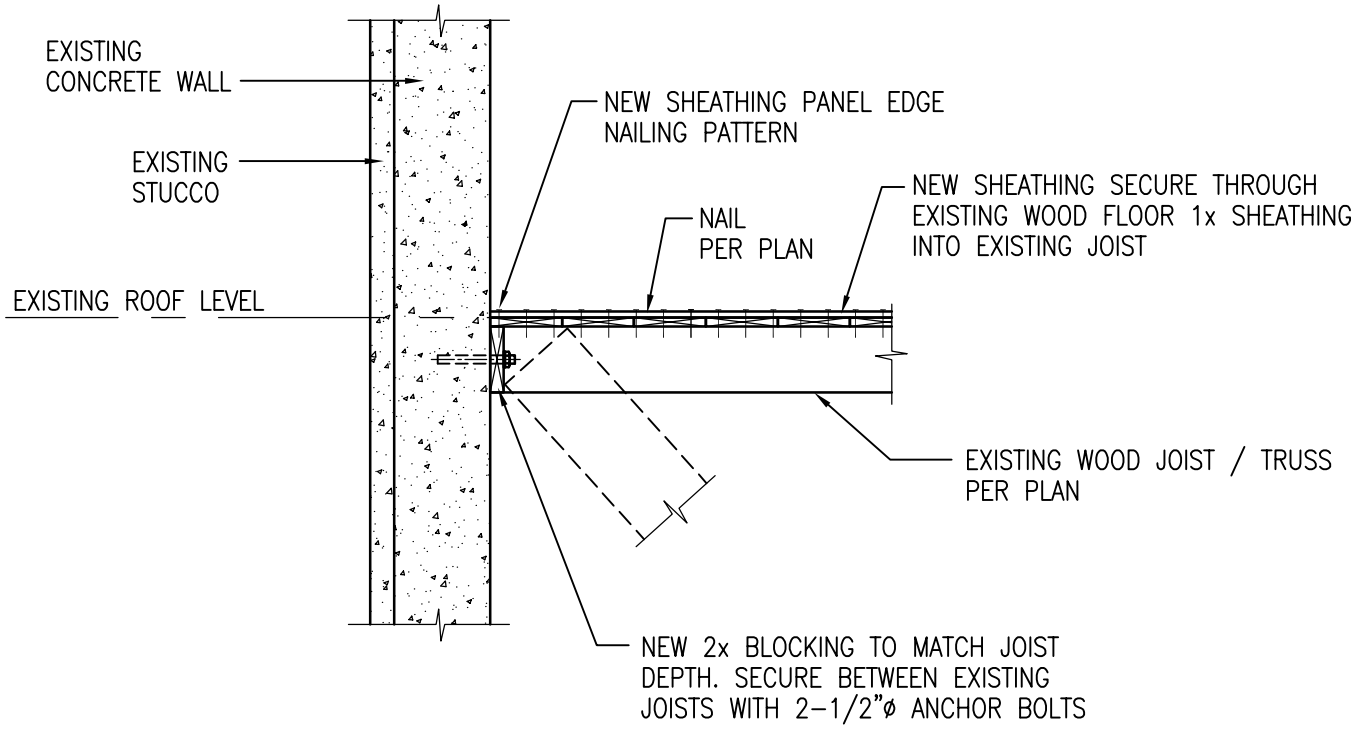

Yolles | A CH2M HILL Company

Project: GLYNN ARCHER SCHOOL				Project No.	No. SK-S8
Design: A.CHAN	Drawn: DCB	Checked: PDS	Date: August 2012	W.P. No.	Scale 3/4"=1'-0"
Subject: ROOF - JOIST / TRUSS PERPENDICULAR TO WALL ANCHORAGE				Reference	

READ THIS SKETCH IN CONJUNCTION WITH STRUCTURAL DRAWINGS AND OTHER CONTRACT DOCUMENTS

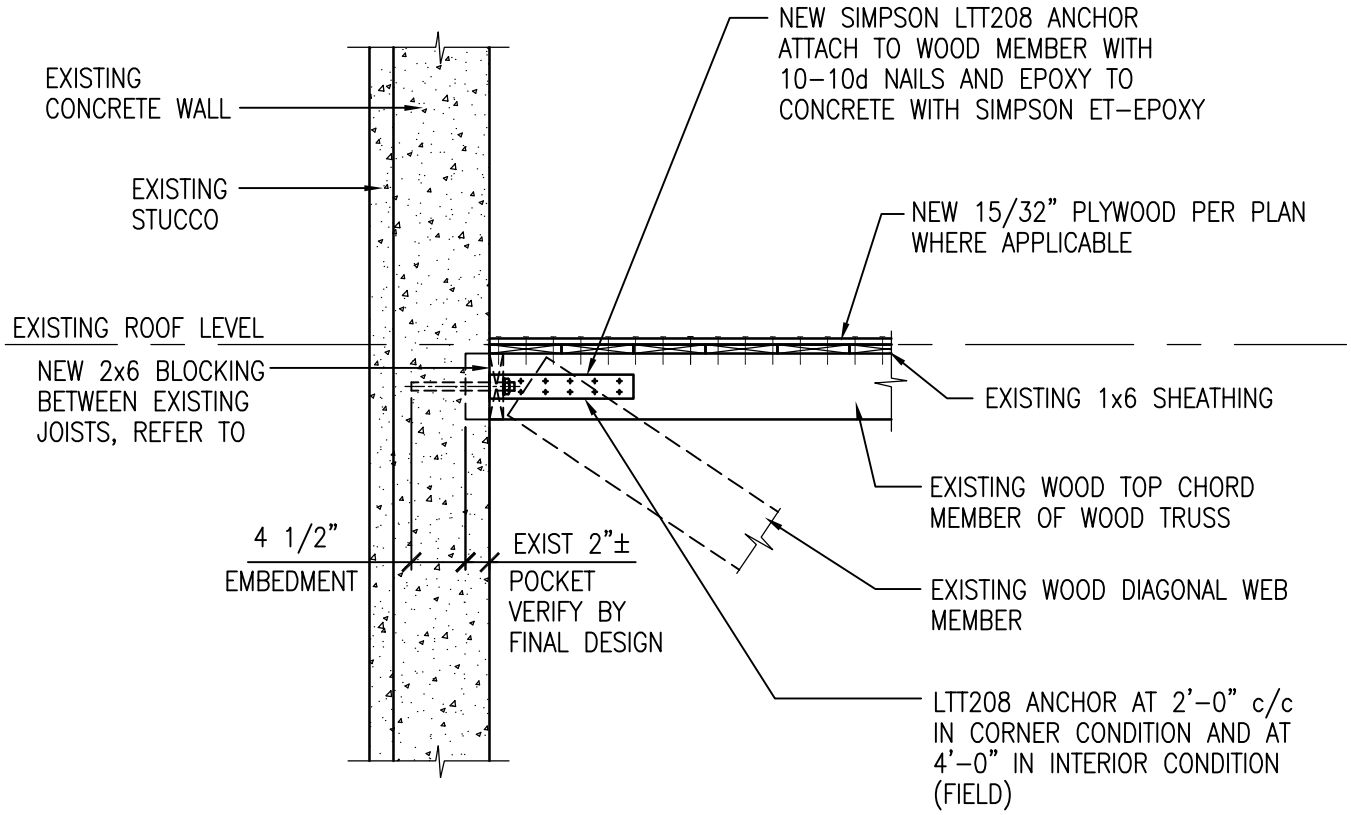

Yolles | A CH2M HILL Company

Project: GLYNN ARCHER SCHOOL				Project No.	No. SK-S9
Design: A.CHAN	Drawn: DCB	Checked: PDS	Date: August 2012	W.P. No.	Scale 3/4"=1'-0"
Subject: ROOF - JOIST / TRUSS PARALLEL TO WALL ANCHORAGE				Reference	

READ THIS SKETCH IN CONJUNCTION WITH STRUCTURAL DRAWINGS AND OTHER CONTRACT DOCUMENTS

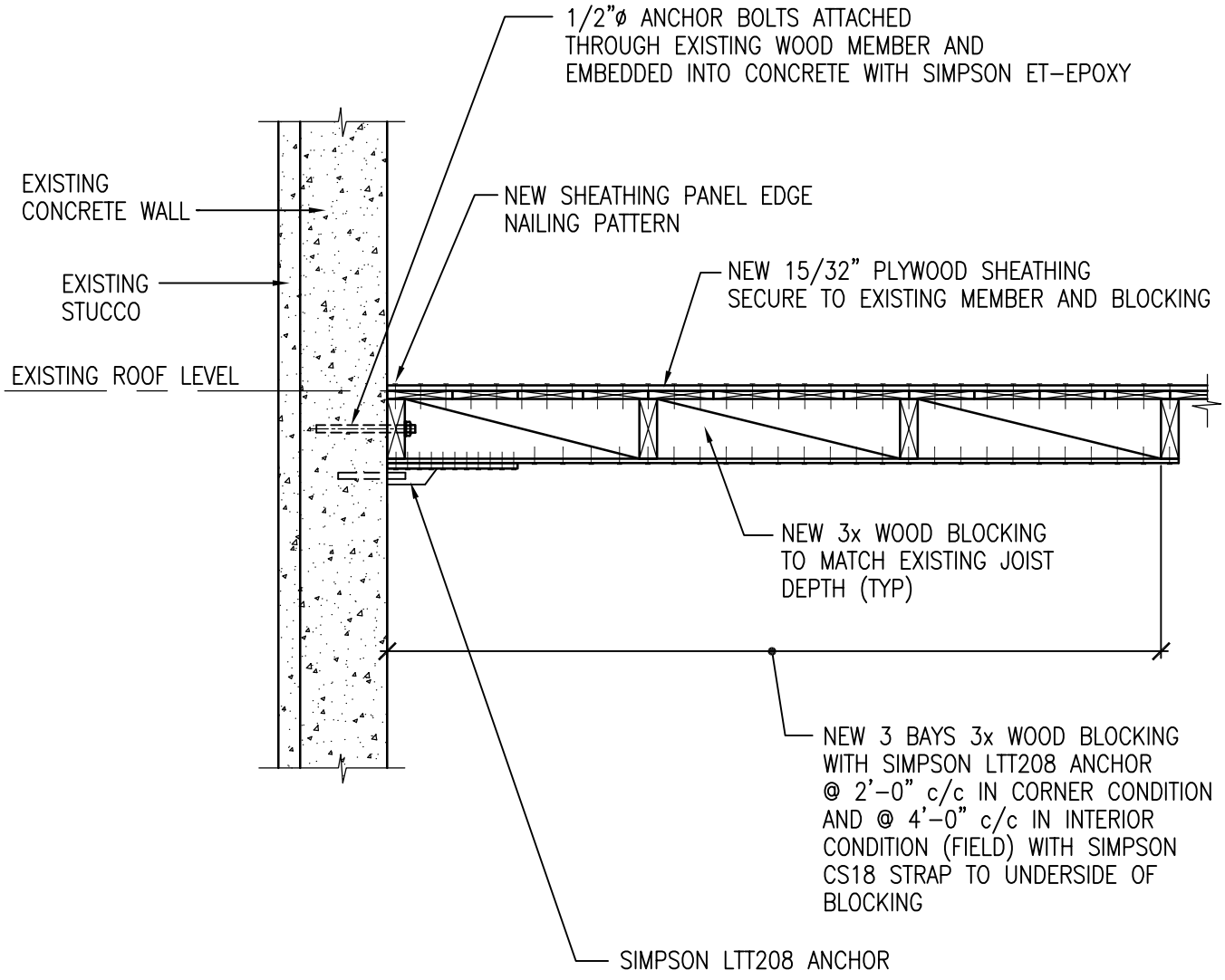

Yolles | A CH2M HILL Company

Project: GLYNN ARCHER SCHOOL				Project No.	No. SK-S10
Design: MIA	Drawn: DCB	Checked: PDS	Date: August 2012	W.P. No.	Scale 3/4"=1'-0"
Subject: WOOD GIRDER REINFORCEMENT SCHEDULE				Reference	

READ THIS SKETCH IN CONJUNCTION WITH STRUCTURAL DRAWINGS AND OTHER CONTRACT DOCUMENTS

WOOD GIRDER REINFORCEMENT SCHEDULE

	EXISTING BEAM	MEMBER REINFORCEMENT	
R1	EXB1	2 – C7x9.8	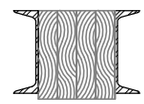
R2	EXB2	4 – 2x8	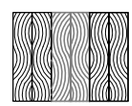
R3	EXB3	3 – 2x8	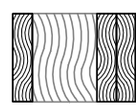
R4	EXB4	2 – C7x9.8	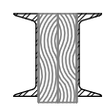
R5	EXB5	1 – 2x8	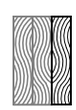
R6	EXB6	2 – C7x9.8	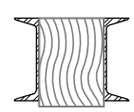
R7	EXB7	2 – 2x8	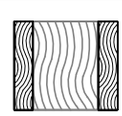
R8	EXB8	2 – C5x9	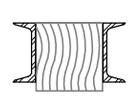

NOTE:

FOR LOCATIONS OF EXISTING BEAMS AND EXISTING BEAMS REQUIRING REINFORCEMENT, REFER TO FOUNDATION AND FIRST FLOOR FRAMING PLAN ON DRAWING S-200.

Yolles | A CH2M HILL Company

Project: GLYNN ARCHER SCHOOL				Project No.	No. SK-S11
Design: MIA	Drawn: DCB	Checked: PDS	Date: August 2012	W.P. No.	Scale 3/4"=1'-0"
Subject: REINFORCED SPREAD FOOTING DETAILS				Reference	

READ THIS SKETCH IN CONJUNCTION WITH STRUCTURAL DRAWINGS AND OTHER CONTRACT DOCUMENTS

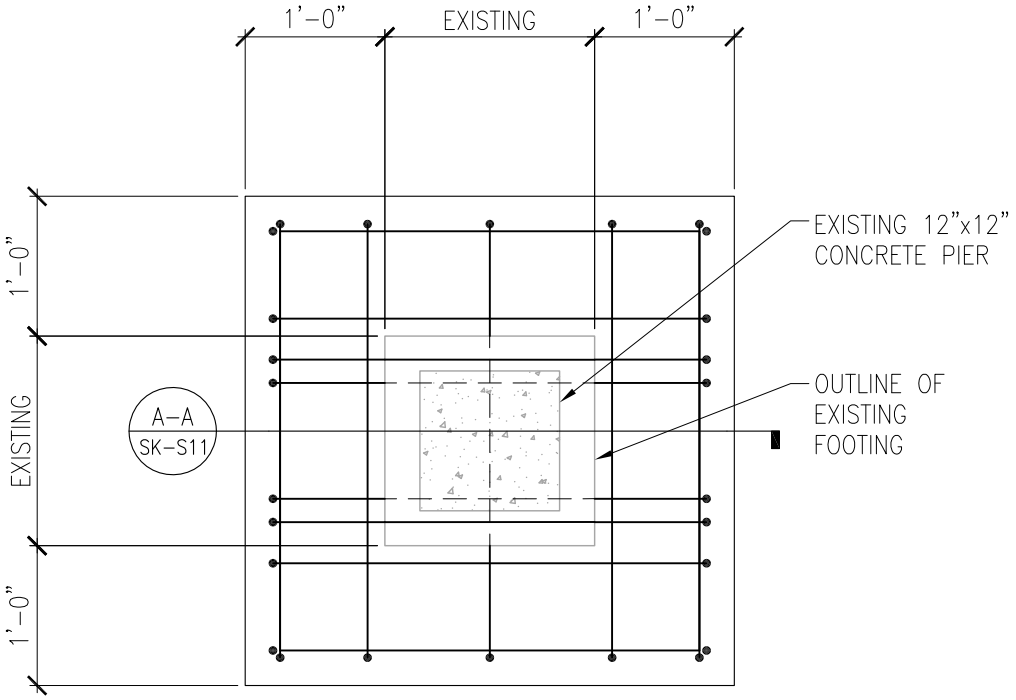

PLAN VIEW

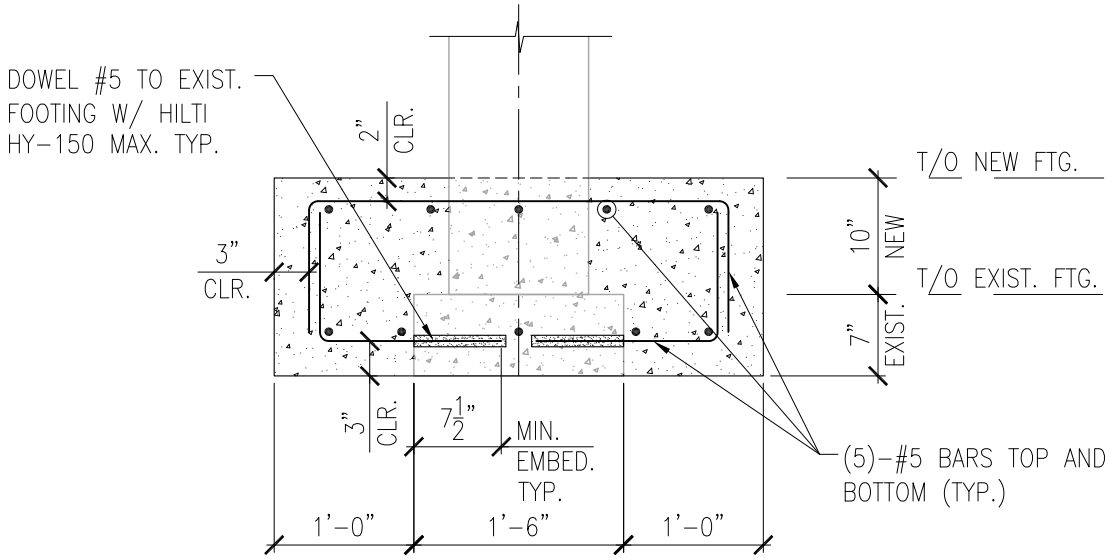

SECTION A-A

Yolles | A CH2M HILL Company

Project: GLYNN ARCHER SCHOOL				Project No.	No. SK-S12
Design: MIA	Drawn: DCB	Checked: PDS	Date: August 2012	W.P. No.	Scale 3/4"=1'-0"
Subject: ROOF JOISTS AT HALLWAY / WOOD CRIPPLE WALLS				Reference	

READ THIS SKETCH IN CONJUNCTION WITH STRUCTURAL DRAWINGS AND OTHER CONTRACT DOCUMENTS

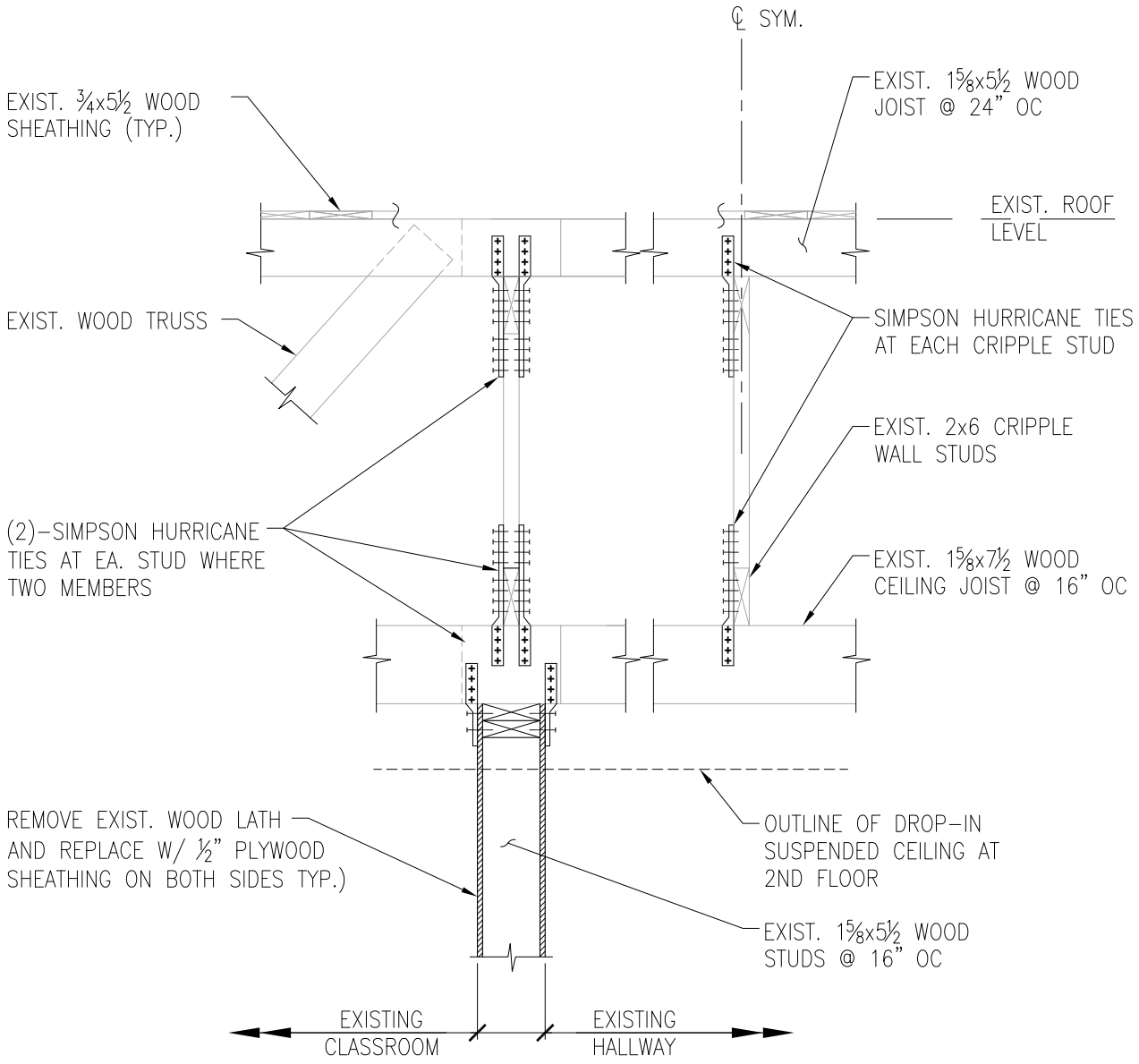

Yolles | A CH2M HILL Company

Project: GLYNN ARCHER SCHOOL				Project No.	No. SK-S13
Design: MIA	Drawn: DCB	Checked: PDS	Date: August 2012	W.P. No.	Scale 3/4"=1'-0"
Subject: AUDITORIUM ROOF WOOD TRUSS				Reference	

READ THIS SKETCH IN CONJUNCTION WITH STRUCTURAL DRAWINGS AND OTHER CONTRACT DOCUMENTS

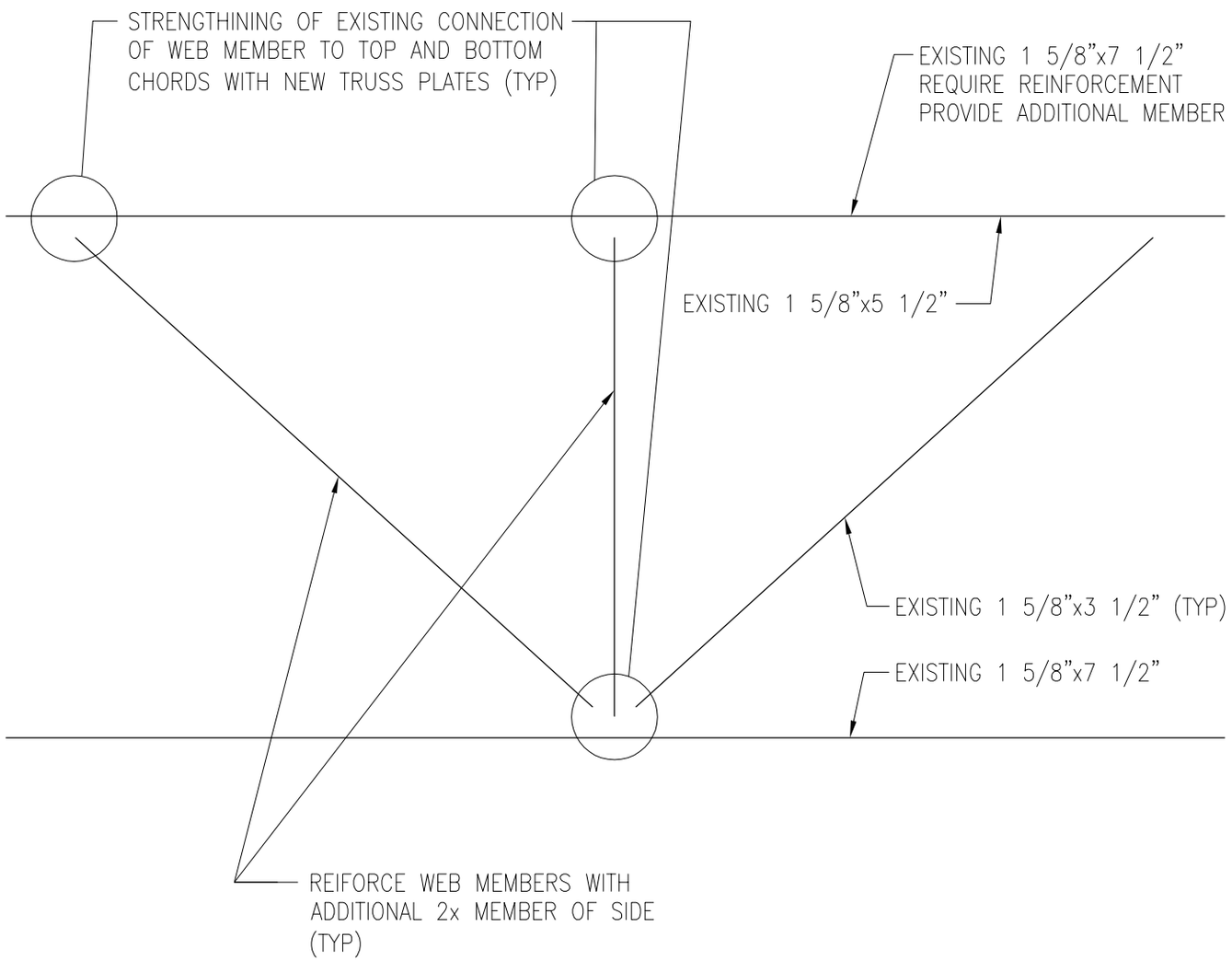

Yolles | A CH2M HILL Company

Project: GLYNN ARCHER SCHOOL				Project No.	No. SK-S14
Design: MIA	Drawn: DCB	Checked: PDS	Date: August 2012	W.P. No.	Scale 3/4"=1'-0"
Subject: BUILDINGS A AND B ROOF WOOD TRUSS				Reference	

READ THIS SKETCH IN CONJUNCTION WITH STRUCTURAL DRAWINGS AND OTHER CONTRACT DOCUMENTS

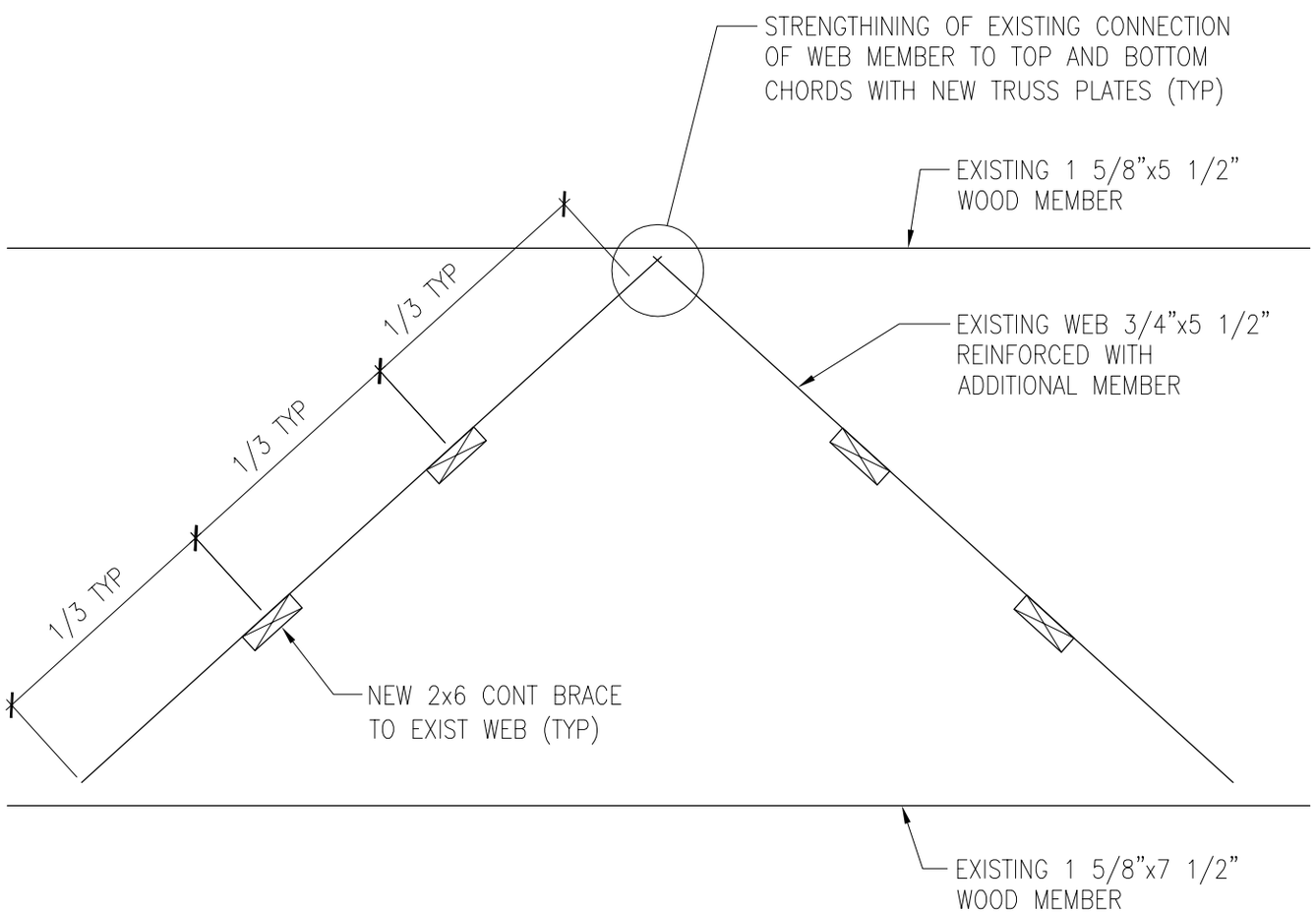

Yolles | A CH2M HILL Company

Project: GLYNN ARCHER SCHOOL				Project No.	No. SK-S15
Design: MIA	Drawn: DCB	Checked: PDS	Date: August 2012	W.P. No.	Scale 3/4"=1'-0"
Subject: CEILING JOIST BEARING AT EXTERIOR CONCRETE WALL				Reference	

READ THIS SKETCH IN CONJUNCTION WITH STRUCTURAL DRAWINGS AND OTHER CONTRACT DOCUMENTS

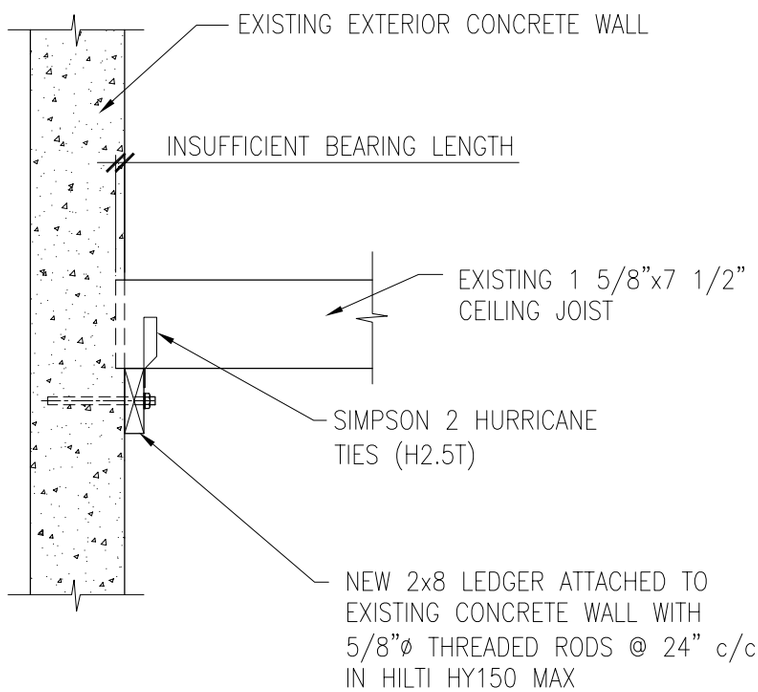

Yolles | A CH2M HILL Company

Project: GLYNN ARCHER SCHOOL				Project No.	No. SK-S16
Design: MF	Drawn: DCB	Checked: MIA / PDS	Date: August 2012	W.P. No.	Scale NTS
Subject: CONCEPT COST ESTIMATING				Reference	

READ THIS SKETCH IN CONJUNCTION WITH STRUCTURAL DRAWINGS AND OTHER CONTRACT DOCUMENTS

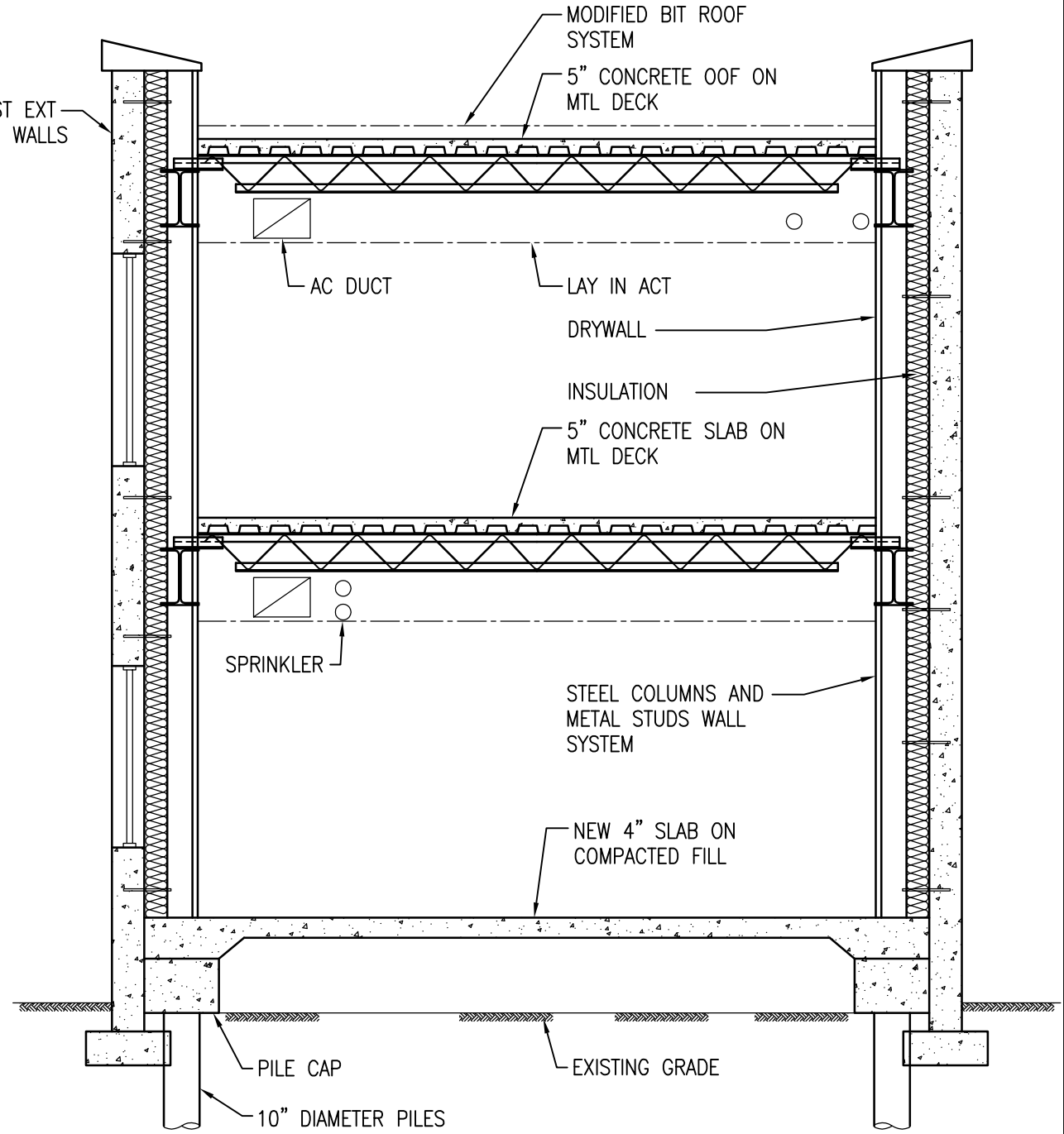

A-A BUILDING SECTION (BLUE SKY)

NTS

Appendix B
Photographs

#1 Auditorium Foundation Existing Condition: Interior Spread Footing and Pier

#2 Auditorium Foundation Existing Condition: Ground Floor Framing

#3 Building A Foundation Existing Condition: Ground Floor Framing and Interior Spread Footing

#4 Building B Foundation Existing Condition: Ground Floor Framing and Interior Spread Footing

#5 Auditorium Roof Framing Existing Condition:
Steel Truss Framing East-West Direction

#6 Auditorium Roof Framing Existing Condition:
Wood Truss Framing North-South Direction

#7 Auditorium First Framing Existing Condition:
Wood Joist / Tongue-and-Groove Plank on Wood Girder

#8 Auditorium Perimeter Wall Existing Condition:
Load Bearing Walls

#9 Building A Existing Condition: Roof Framing

#10 Building A Existing Condition:
Roof Diaphragm Perimeter Chord Members

#11 Building A Existing Condition: Second Floor
Framing Wood Joists

BLDG A

#12

AUDITORIUM #13

BLDG B #14

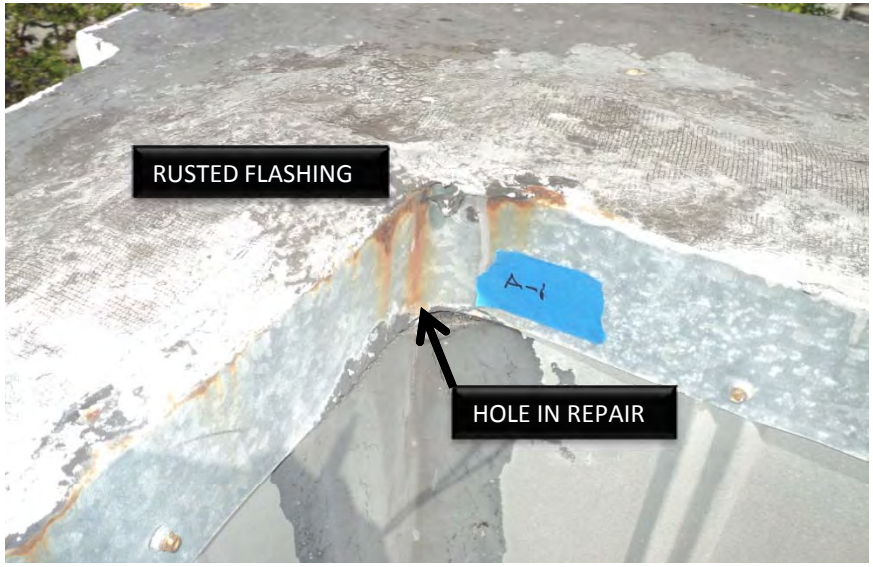

BLDG A #15

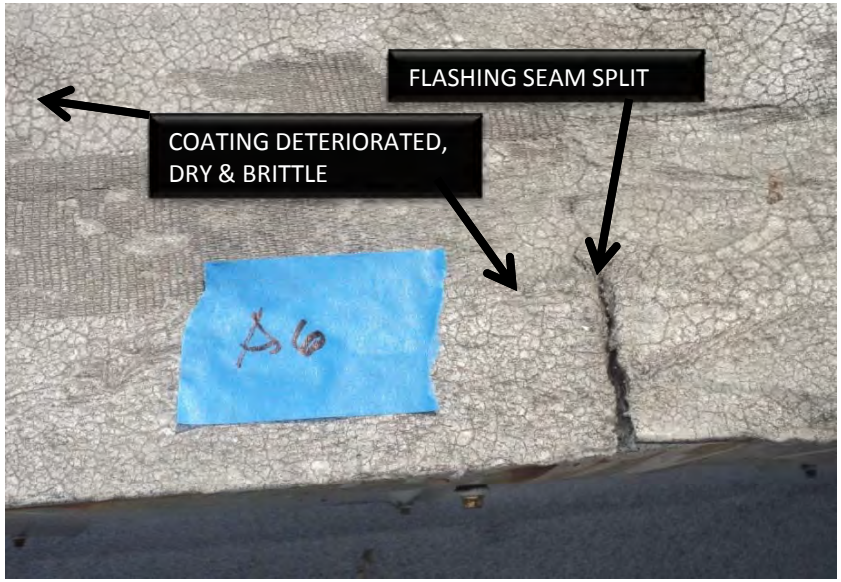

BLDG A #16

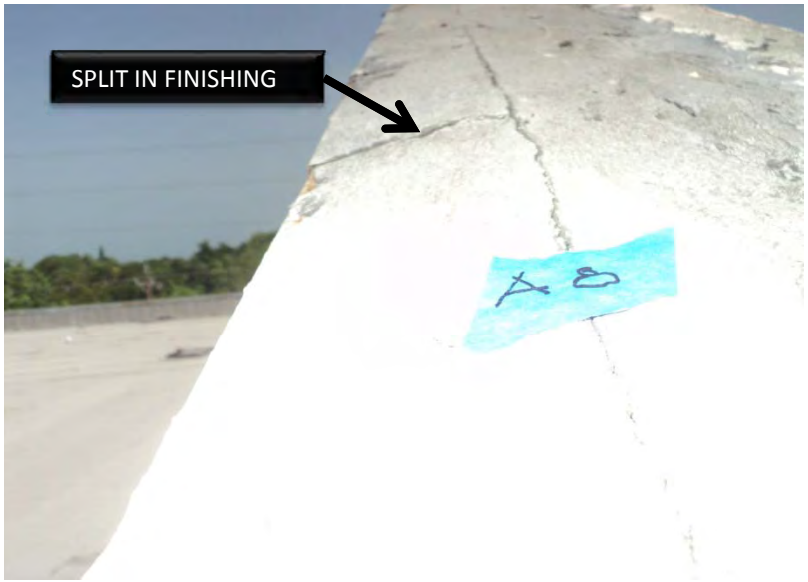

BLDG A #17

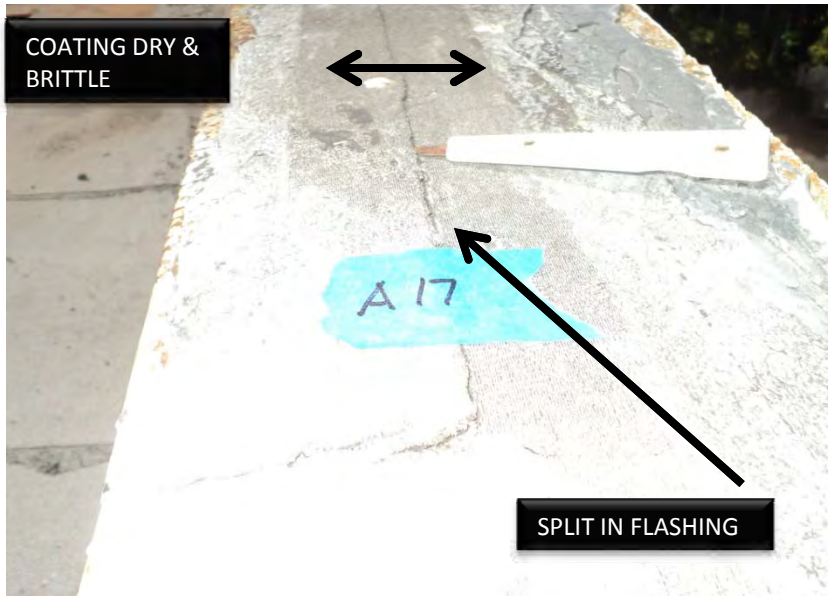

BLDG A #18

AUDITORIUM #19

BLDG A #20

BLDG B #21

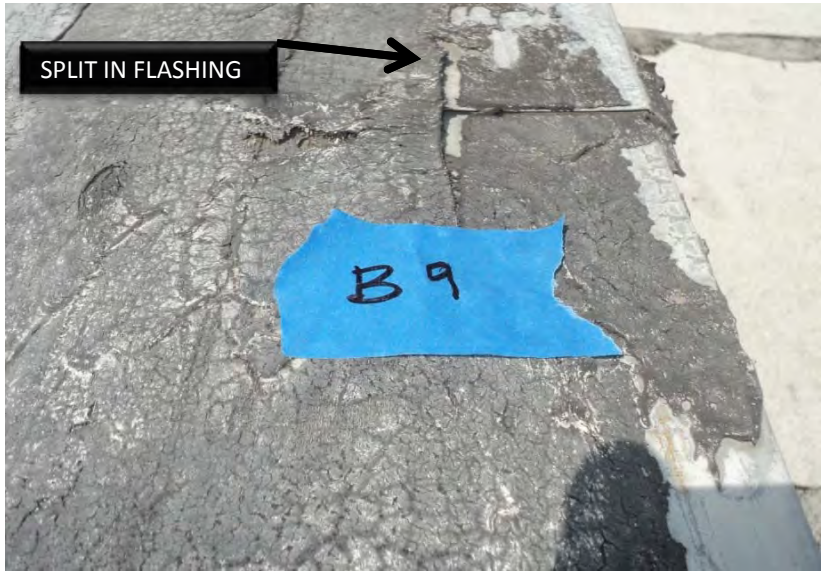

BLDG B #22

BLDG A #23

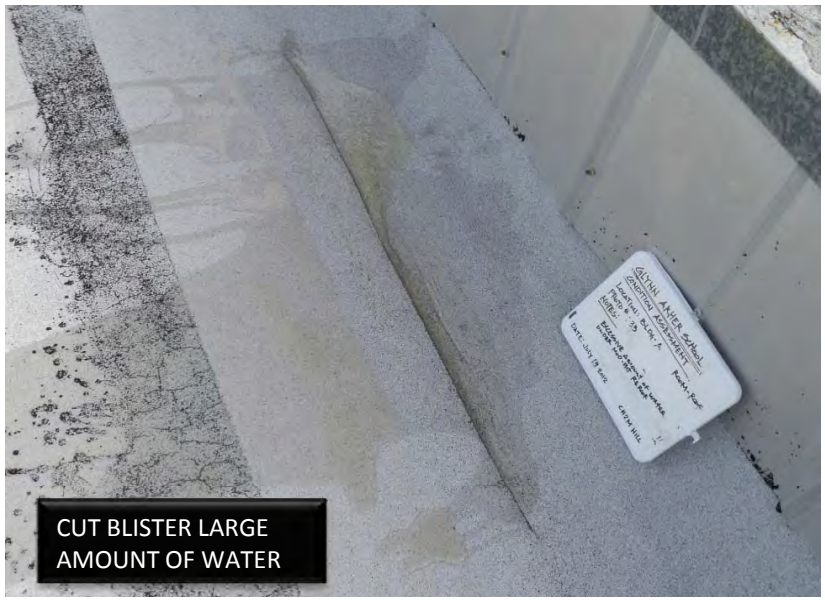

BLDG A #24

BLDG B #25

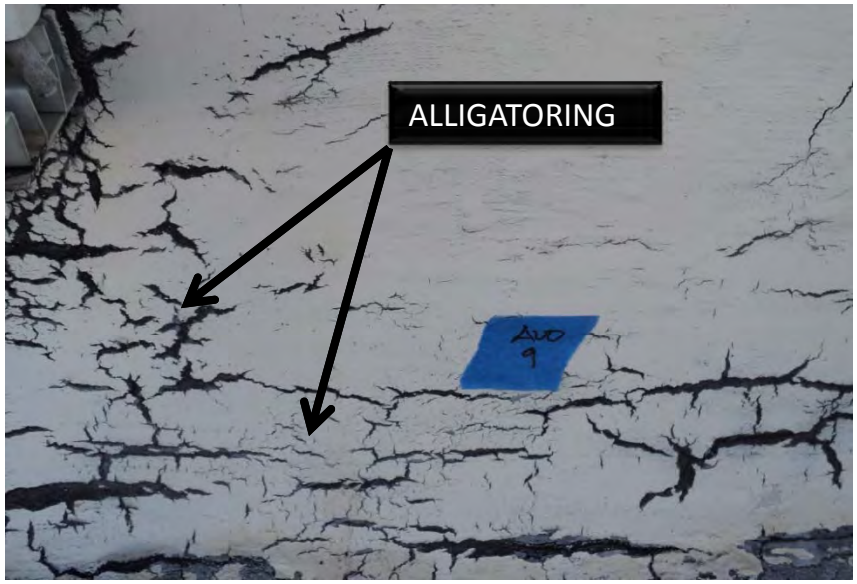

AUDITORIUM #26

AUDITORIUM #27

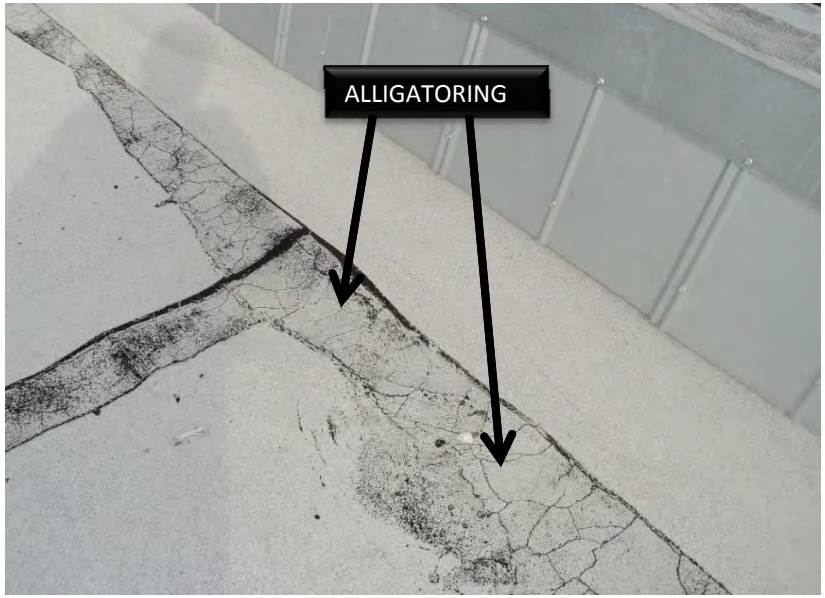

BLDG B #28

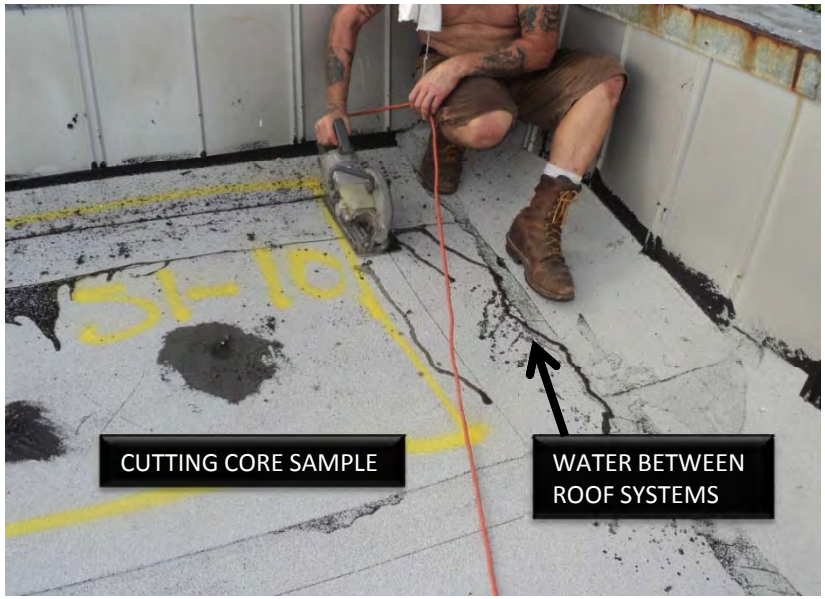

BLDG A #29

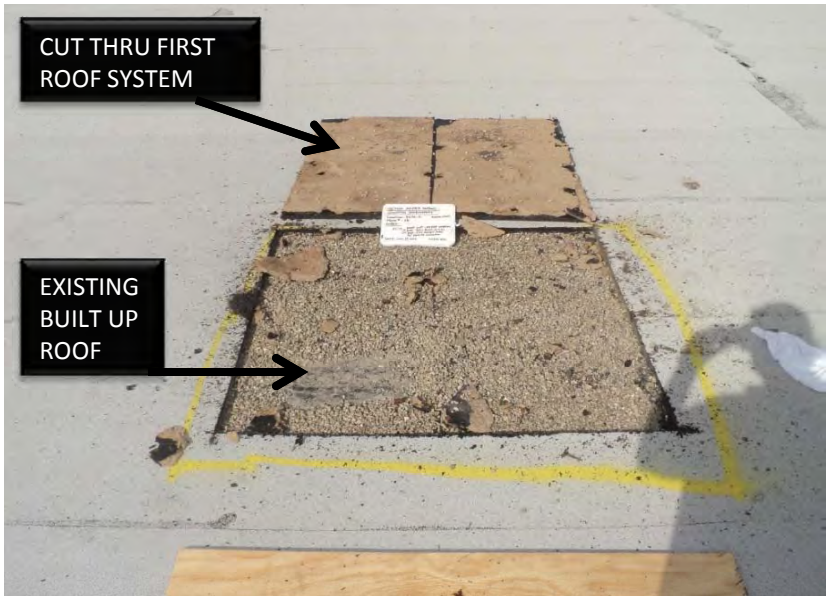

BLDG A #30

BLDG A #31

AUDITORIUM #32

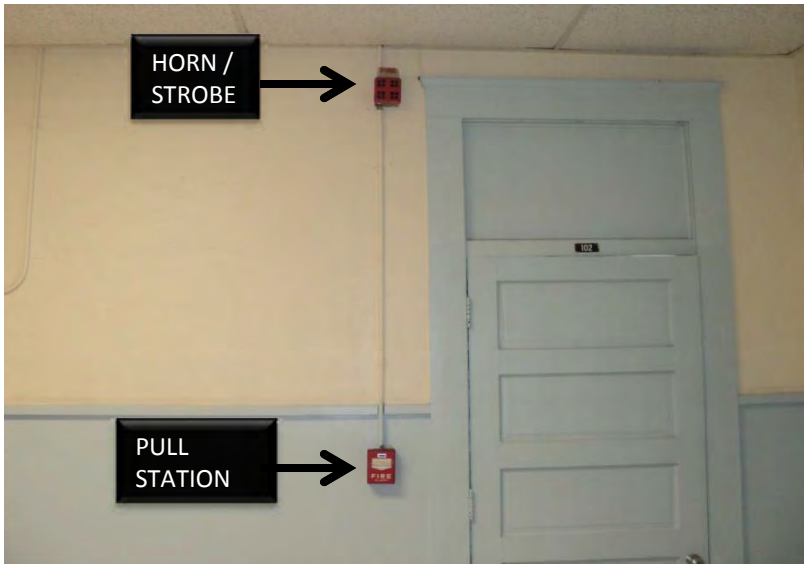
HORN /
STROBE
PULL
STATION

#33

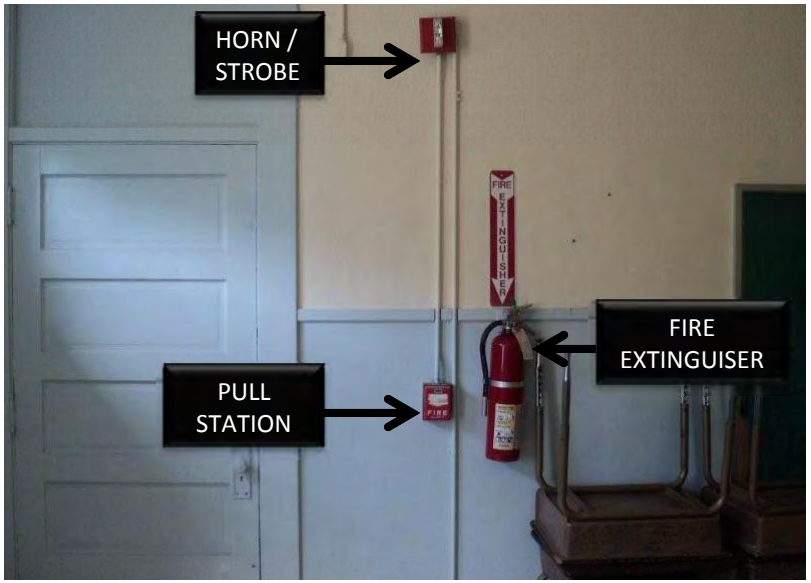
HORN /
STROBE
FIRE
EXTINGUISER
PULL
STATION

#34

EXIT
SMOKE
DETECTOR

#35

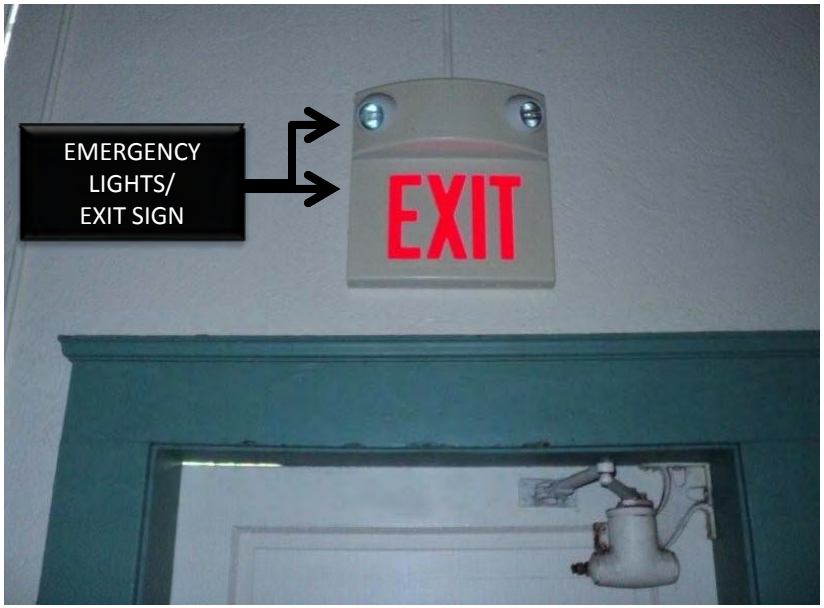
EMERGENCY
LIGHTS/
EXIT SIGN
EXIT

#36

EXIT
EMERGENCY
LIGHTS/
EXIT SIGN

#37

CORRODED
STEEL STAIR

#38

CORRODED STEEL
EXIT STAIRS

#39

SERVICE DROP-
OVER ROOF

#40

CORROSION ON HVAC
DISCONNECTS
A/C STARTER 2

#41

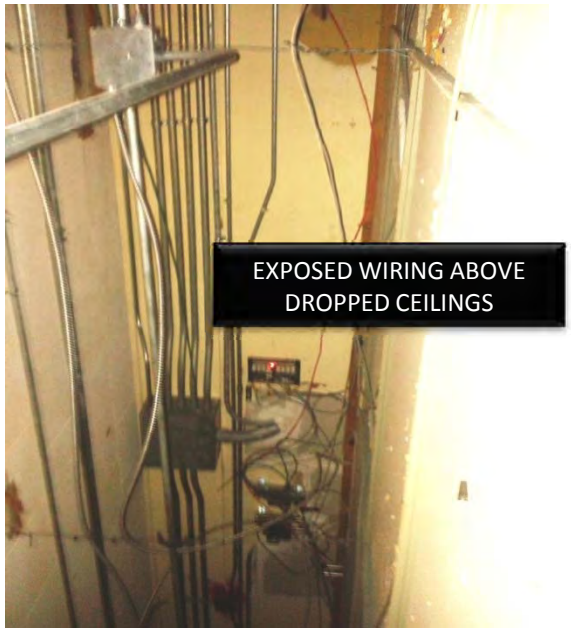
EXPOSED WIRING ABOVE
DROPPED CEILINGS

#42

Appendix C
Nutting Engineers Report (Geotechnical and Concrete Testing)

REPORT OF
GEOTECHNICAL EXPLORATION
CONCRETE CORE TESTING
AND FOUNDATION EXCAVATIONS

GLYNN ARCHER SCHOOL BUILDING
1300 WHITE STREET
KEY WEST, FLORIDA

FOR

CH2M HILL
6410 FIFTH STREET, SUITE 2A
KEY WEST, FLORIDA 33040

PREPARED BY

NUTTING ENGINEERS OF FLORIDA, INC.
2051 NW 112th AVENUE
MIAMI, FLORIDA 33172

ORDER NO. 126.24

AUGUST, 2012

Nutting Engineers
of Florida Inc. | Established 1967
Your Project is Our Commitment

Geotechnical & Construction Materials
Engineering, Testing & Inspection
Environmental Services

Offices throughout the state of Florida

www.nuttingengineers.com info@nuttingengineers.com

TABLE OF CONTENTS

PROJECT INFORMATION 3
SOIL TEST BORINGS AND RESULTS 4
Groundwater Information 4
Bearing Capacity Analysis 4
CONCRETE TESTING RESULTS 4
FOUNDATION EXPLORATION RESULTS 5
General 6

APPENDIX

Appendix 1: **Boring Location Plan (Figure 1), Test Boring Records (4)**
Appendix 2: **Concrete Testing and Footing Excavation Location Plan (Figure 2)**
Appendix 3: **Building Footing Dimensions (Figures 3 and 4)**
Appendix 4: **Concrete Core Break Test Results (Reports 1 and 2)**
Appendix 5: **Representative Photographs**
Limitations of Liability, Soil Classification Criteria

Nutting Engineers
of Florida Inc. | Established 1967
Your Project is Our Commitment

1310 Neptune Drive
Boynton Beach, Florida 33426
561-736-4900
Toll Free: 877-NUTTING (688-8464)
Fax: 561-737-9975
Broward 954-941-8700
St. Lucie 772-408-1050
Miami-Dade 305-557-3083
www.nuttingengineers.com

Geotechnical and Construction Materials | Engineering, Testing and Inspections | Environmental Services

August 10, 2012

CH2M Hill
6410 Fifth Street, Suite 2A
Key West, Florida 33040
Attn: Mr. Dean Garcia, P.E.

Subject: Report of Geotechnical Exploration, Concrete Core Testing, and Foundation Excavations
Glynn Archer School Building
1300 White Street
Key West, Florida 33040

Dear Mr. Garcia:

Nutting Engineers of Florida, Inc. has performed a geotechnical exploration, concrete core testing, and foundation excavations for the Glynn Archer School building at the above referenced site in Key West, Florida. This exploration was performed in accordance with our proposal dated May 18, 2012 and the purchase order dated July 19, 2012. The purpose of this exploration was to obtain information concerning the site and subsurface conditions at specific test boring locations in order to evaluate the soil bearing capacity. In addition, concrete cores were collected and tested for compressive strength, and foundations were exposed to provide information concerning the dimensions of the footings. This report presents our findings and recommendations.

PROJECT INFORMATION

The Glynn Archer School was constructed in approximately 1926 (Building A and Auditorium) with additional buildings being constructed in approximately 1936 (Building B) and 1950 (cafeteria). There is also a separate gymnasium building. The work performed for this study included Buildings A, B, and the Auditorium only.

Plans include turning the buildings over to the City of Key West with the intention of converting the buildings to a City Hall facility. In order to determine the condition of the existing building, several studies are being conducted by various entities. The focus of our portion of the project was to perform soil borings for bearing capacity analysis, expose representative footings to

determine the dimensions of the footings, and perform concrete cores within the walls to provide information concerning the compressive strength of the concrete.

SOIL TEST BORINGS AND RESULTS

In order to explore the subsurface conditions at the subject site, four Standard Penetration Test (SPT) borings were performed to depths of twenty-five feet. The drill technician maintained field boring reports, which indicate the depth of each stratum, material type, blow counts, groundwater levels and other pertinent information. All samples were inspected in our laboratory and final test boring reports prepared. The borings were established in the field using available surface controls and therefore, the boring locations should be considered to be approximate. These reports are included in the appendix.

In general, beneath the surficial layer of topsoil/asphalt, the borings revealed calcareous oolitic sand and limestone formation from the ground surface to twenty-five feet, the maximum depth explored. 'N'-values ranged from 25 blows per foot to refusal. We note that all borings revealed refusal conditions from two to at least ten feet. Please see the enclosed soil classification sheets in the Appendix of this report for additional important information regarding these descriptions, the field evaluation and other related information.

Groundwater Information

The groundwater level was measured at the boring locations at the time of drilling. The groundwater level was encountered at approximately five to six feet below the existing ground surface. Fluctuation in the observed groundwater levels should be expected due to tidal fluctuations, rainfall variations, seasonal climatic changes, construction activity and other site-specific factors.

The immediate depth to groundwater measurements presented in this report may not provide a reliable indication of stabilized or more long term depth to groundwater at this site. Water table elevations can vary dramatically with time through rainfall, droughts, storm events, flood control activities, nearby surface water bodies, tidal activity, pumping and many other factors. For these reasons, this immediate depth to water data should not be relied upon alone for project design considerations.

Bearing Capacity Analysis

Based on the boring results, the soils at the existing foundation levels are suitable for support of the building using a minimum allowable bearing pressure of 4,000 pounds per square foot.

CONCRETE TESTING RESULTS

As part of this study, a total of seven concrete cores were taken at various wall and footing locations. The locations of the concrete cores are shown on the test location plan in the

Appendix. The cores indicated an average compressive strength for building A of approximately 1,835 pounds per square inch, and for building B, an average of approximately 3,813 pounds per square inch. We did note that the cores from building A were less dense and contained relatively large aggregate, with some particles in the two-inch diameter range. The results of the testing are presented in the table below, and a more detailed table is presented in the Appendix section of this report.

Core Number	Core Location	Compressive Strength (psi)
1	Bldg A, East Wall North of Front Entrance, 1st Level	1952
2	Bldg A, South Wall, 2nd Level at Stairs	1717
3	Bldg B, Approx. Center of East Wall, 1st Level	4229
4	Bldg B, Approx. Center of West Wall, 1st Level	3183
5	Bldg B, South Wall at Stairs, 2nd Level	4193
6	Bldg B, Footing at SW Corner of Building	3634
7	Bldg B, Footing at NE Corner of Building	3824

In addition, four Windsor probes were performed to provide additional information concerning the compressive strength of the concrete. One Windsor probe was performed on the slab in the classroom on the southeast corner of building B where a cistern was constructed and resulted in the floor slab being concrete in this room. The results of the Windsor probe indicated a compressive strength of 7,500 psi. Windsor probes were also performed on columns at the auditorium and resulted in considerable variation with 1,713 psi on a column on the north side of the building to 4,187 psi on a column on the south side of the building. We note that we were attempting to perform additional Windsor probes, however, the principal of the school requested that we suspend testing.

FOUNDATION EXPLORATION RESULTS

Another aspect of this study was to expose representative wall and column footings to determine their dimensions. Specifically, four wall footings on the exterior and three column footings beneath the wood floor were exposed and these locations are shown on the test location plan presented in the Appendix. In general, the column footing dimensions were consistent and consisted of a 32-inch square concrete base, with a 12-inch square concrete column supporting the wood floor joist system. The exterior wall footing excavations revealed varying dimensions

depending on the location. Details of the explored footings are shown on the footing detail drawings presented in the Appendix.

General Information

Our client for this geotechnical evaluation was:

CH2M Hill
6410 5th Street, Suite 2A
Key West, Florida 33040

The contents of this report are for the exclusive use of the client, the client's design & construction team and governmental authorities for this specific project exclusively. Information conveyed in this report shall not be used or relied upon by other parties or for other projects without the expressed written consent of NUTTING ENGINEERS OF FLORIDA, INC. This report discusses geotechnical considerations for this site based upon observed conditions and our understanding of proposed construction for foundation support. Environmental issues including (but not limited to), soil and/or groundwater contamination are beyond our scope of service for this project.

If conditions are encountered which are not consistent with the findings presented in this report, or if proposed construction is moved from the location studied, this office shall be notified immediately so that the condition or change can be evaluated and appropriate action taken.

We appreciate the opportunity to provide these services for you. If we can be of any further assistance, or if you need additional information, please feel free to contact us.

Sincerely,
NUTTING ENGINEERS OF FLORIDA, INC.

Christopher E. Gworek, P.E.
Senior Engineer

Richard Wohlfarth 8/15/12
Richard Wohlfarth, P.E. #50858
Director of Engineering

APPENDIX SECTION

APPENDIX 1:

BORING LOCATION PLAN (FIG.1)
TEST BORING RECORDS (4)

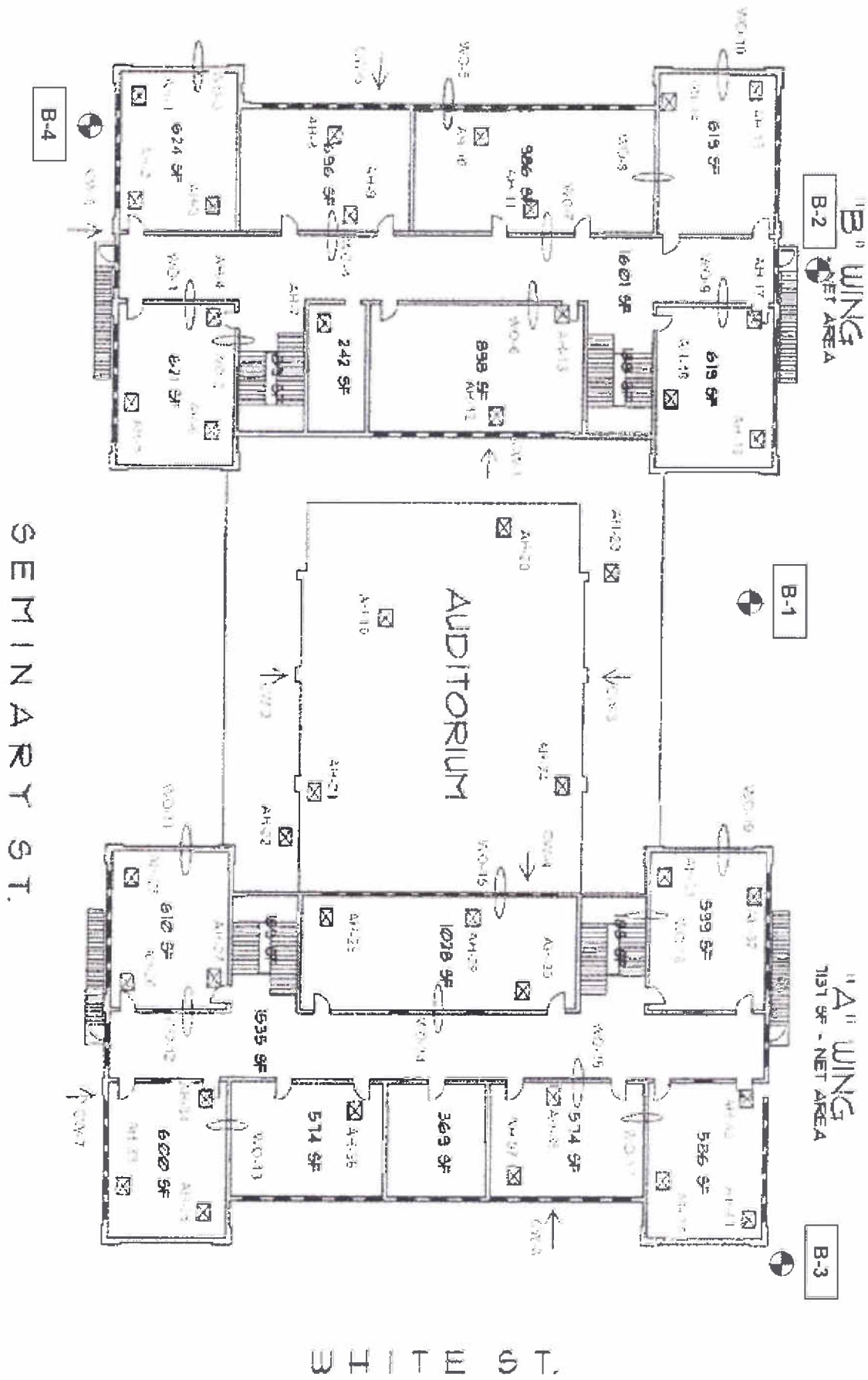

ASSUMED NORTH

N

NOT TO SCALE

PROJECT NO. 126.24

Glynn Archer School
1300 White Street
Key West, Florida

BORING LOCATION PLAN

FIGURE 1

NUTTING ENGINEERS OF FLORIDA, INC.
ESTABLISHED 1957

Nutting Engineers of FLorida, Inc.
1310 Neptune Drive
Boynton Beach Fl., 33426
Telephone: (561) 736-4900
Fax: (561) 737-9975

BORING NUMBER B-1

PROJECT NUMBER 126.24
CLIENT CH2M Hill
PROJECT NAME City of Key West - Glynn Archer School
PROJECT LOCATION Key West, Florida

DATE STARTED 7/16/12 COMPLETED 7/16/12
SURFACE ELEVATION REFERENCE Approx. @ Road Crown
DRILLING METHOD Standard Penetration Boring
GROUND WATER LEVELS:
LOGGED BY D. Tyson CHECKED BY R.C. Wolfarth
∇ AT TIME OF DRILLING 5.5 ft
APPROXIMATE LOCATION OF BORING As located on site plan

DEPTH (ft)	GRAPHIC LOG	MATERIAL DESCRIPTION	SAMPLE TYPE NUMBER	Blows	N-Value	▲ SPT N VALUE ▲ 10 20 30 40 / PL MC LL 20 40 60 80 / ☐ FINES CONTENT (%) ☐ 20 40 60 80
0		Gray quartz medium SAND and LIMESTONE fragments	SS 1	7-19-21-50/3"	100+	>>
		Lt. tan oolitic LIMESTONE	AU 2			
5		∇	SS 3	30-50/4"	100+	>>
			AU 4			
			SS 5	48-50/3"	100+	>>
10			AU 6			
			SS 7	40-50/5"	100+	>>
15						
			SS 8	18-20-18	38	▲
20						
		Lt. tan oolitic LIMESTONE and lt. tan slightly silty quartz fine SAND				
		Bottom of hole at 23.8 feet.	SS 9	50/4"	100+	>>

TEST NUTTING BOREHOLE 2-126.24 CH2M HILL - CITY OF KEY WEST GLYNN ARCHER SCHOOL.GPJ GINT US.GDT 7/25/12

Nutting Engineers of FLorida, Inc.
1310 Neptune Drive
Boynton Beach Fl., 33426
Telephone: (561) 736-4900
Fax: (561) 737-9975

BORING NUMBER B-2

PROJECT NUMBER 126.24

CLIENT CH2M Hill

PROJECT NAME City of Key West - Glynn Archer School

PROJECT LOCATION Key West, Florida

DATE STARTED 7/16/12 COMPLETED 7/16/12

SURFACE ELEVATION REFERENCE Approx. @ Road Crown

DRILLING METHOD Standard Penetration Boring

GROUND WATER LEVELS:

LOGGED BY D. Tyson CHECKED BY R.C. Wolfarth

∇ AT TIME OF DRILLING 5.6 ft

APPROXIMATE LOCATION OF BORING As located on site plan

DEPTH (ft)	GRAPHIC LOG	MATERIAL DESCRIPTION	SAMPLE TYPE NUMBER	Blows	N-Value
0		Gray quartz medium SAND and LIMESTONE fragments	SS 1	7-10-15-31	25
		Lt. tan oolitic LIMESTONE	SS 2	50/2"	100+
5			SS 3	39-50/4"	100+
	∇		AU 4		
10			SS 5	35-50/5"	100+
			AU 6		
15			SS 7	32-50/4"	100+
		Lt. tan oolitic LIMESTONE and lt. tan slightly silty quartz fine SAND			
20			SS 8	14-14-15	29
25			SS 9	15-20-22	42
		Bottom of hole at 25.0 feet.			

▲ SPT N VALUE ▲ (10 20 30 40)

PL MC LL (20 40 60 80)

☐ FINES CONTENT (%) ☐ (20 40 60 80)

Nutting Engineers of FLorida, Inc.
1310 Neptune Drive
Boynton Beach Fl., 33426
Telephone: (561) 736-4900
Fax: (561) 737-9975

BORING NUMBER B-3

PROJECT NUMBER 126.24

CLIENT CH2M Hill

PROJECT NAME City of Key West · Glynn Archer School

PROJECT LOCATION Key West, Florida

DATE STARTED 7/17/12 COMPLETED 7/17/12

SURFACE ELEVATION REFERENCE Approx. @ Road Crown

DRILLING METHOD Standard Penetration Boring

GROUND WATER LEVELS:

LOGGED BY D. Tyson CHECKED BY R.C. Wolfarth

∇ AT TIME OF DRILLING 5.5 ft

APPROXIMATE LOCATION OF BORING As located on site plan

DEPTH (ft)	GRAPHIC LOG	MATERIAL DESCRIPTION	SAMPLE TYPE NUMBER	Blows	N-Value
0		ASPHALT and baserock	SS 1	17-16-38-50/2"	100+
		Lt. tan oolitic LIMESTONE	AU 2		
			SS 3	50/4"	100+
5	∇				
			AU 4		
			SS 5	50/5"	100+
10			AU 6		
		Lt. tan oolitic LIMESTONE and lt. tan slightly silty SAND			
			SS 7	37-43-37	80
15					
			SS 8	20-20-24	44
20					
			SS 9	30-36-41	77
25		Bottom of hole at 25.0 feet.			

▲ SPT N VALUE ▲ 10 20 30 40

PL MC LL 20 40 60 80

☐ FINES CONTENT (%) ☐ 20 40 60 80

Nutting Engineers of FLorida, Inc.
1310 Neptune Drive
Boynton Beach Fl., 33426
Telephone: (561) 736-4900
Fax: (561) 737-9975

BORING NUMBER B-4

PROJECT NUMBER 126.24

CLIENT CH2M Hill

PROJECT NAME City of Key West - Glynn Archer School

PROJECT LOCATION Key West, Florida

DATE STARTED 7/17/12 COMPLETED 7/17/12

SURFACE ELEVATION REFERENCE Approx. @ Road Crown

DRILLING METHOD Standard Penetration Boring

GROUND WATER LEVELS:

LOGGED BY D. Tyson CHECKED BY R.C. Wolfarth

∇ AT TIME OF DRILLING 5.5 ft

APPROXIMATE LOCATION OF BORING As located on site plan

DEPTH (ft)	GRAPHIC LOG	MATERIAL DESCRIPTION	SAMPLE TYPE NUMBER	Blows	N-Value
0		Gray quartz medium SAND, some limestone fragments	SS 1	14-16-19-37	35
		Lt. tan oolitic LIMESTONE	SS 2	50/3"	100+
5			SS 3	50/4"	100+
			AU 4		
			SS 5	50/3"	100+
10			AU 6		
			SS 7	50/4"	100+
15		Lt. tan oolitic LIMESTONE and lt. tan slightly silty quartz fine SAND			
20			SS 8	25-36-46	82
25			SS 9	18-22-20	42
		Bottom of hole at 25.0 feet.			

▲ SPT N VALUE ▲ 10 20 30 40

PL MC LL 20 40 60 80

☐ FINES CONTENT (%) ☐ 20 40 60 80

APPENDIX 2:

CONCRETE TESTING AND FOOTING TESTING LOCATION PLAN (FIG. 2)

STRUCTURAL INVESTIGATION
BUILDINGS A & B AND AUDITORIUM - FIRST FLOOR PLAN

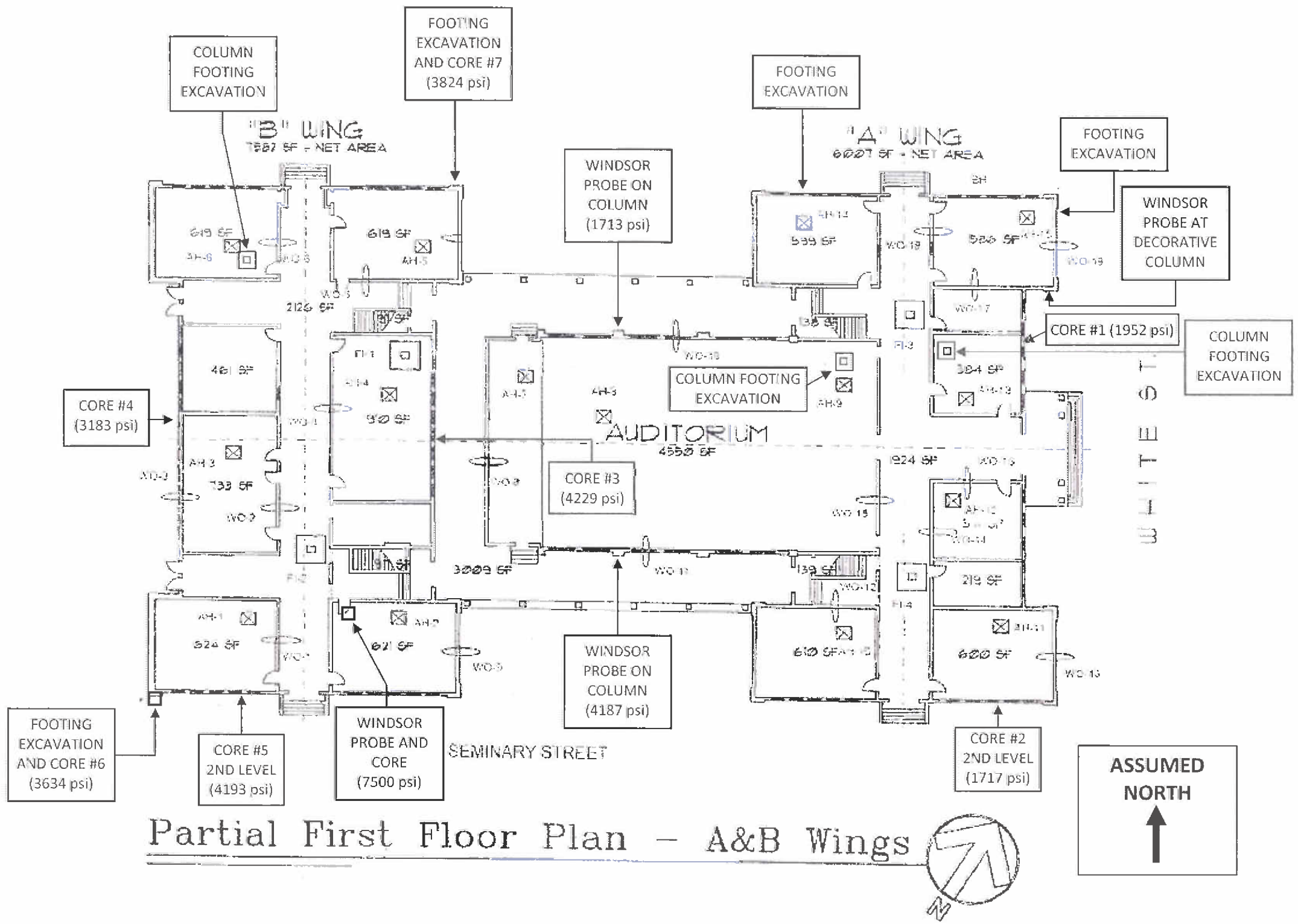

NOT TO SCALE
PROJECT NO. 126.24

Glynn Archer School
1300 White Street
Key West, Florida

CONCRETE CORE LOCATIONS
WINDSOR PROBE LOCATIONS
FOOTING EXCAVATION LOCATIONS

FIGURE 2

NUTTING ENGINEERS OF FLORIDA, INC.
ESTABLISHED 1967

APPENDIX 3:

BUILDING FOOTING DIMENSIONS (FIG. 3 and 4)

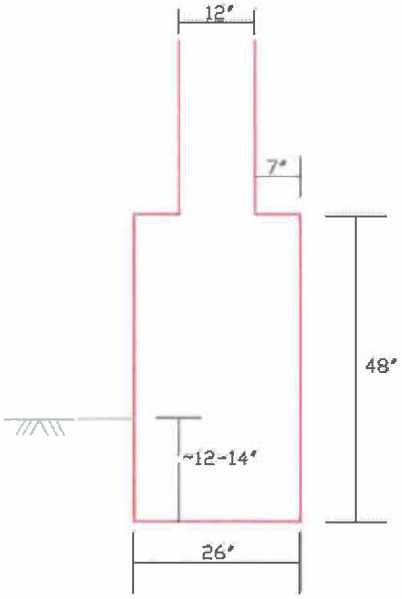

WALL FOUNDATION AT
EAST SIDE OF BUILDING BY
NORTHEAST BUILDING CORNER
(Side Profile)

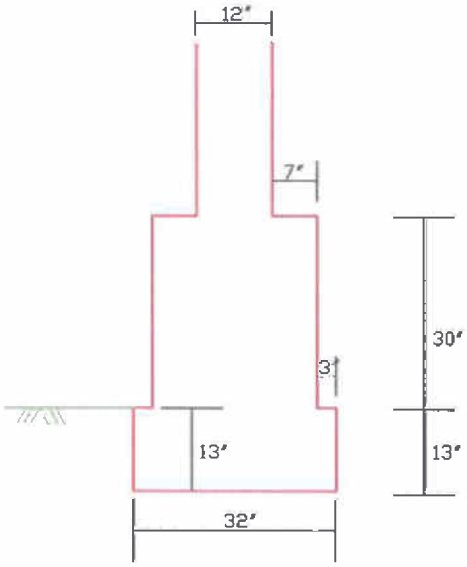

WALL FOUNDATION AT
NORTH SIDE OF BUILDING AT
NORTHWEST CORNER
(Side Profile)

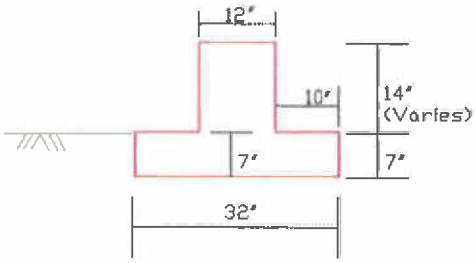

(Side Profile)

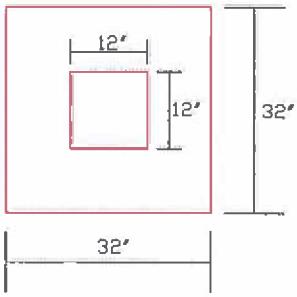

(Top View)

COLUMN FOUNDATION IN
AUDITORIUM BY BLDG. "A", AND
CLOSET IN ADMINISTRATION OFFICE

ALL DIMENSIONS PROVIDED HEREIN SHALL BE CONSIDERED APPROXIMATE
DIAGRAMS PROVIDED ARE SPECIFIC TO EXCAVATION AREAS AND MAY VARY THROUGHOUT THE BUILDING

NUTTING ENGINEERS OF FLORIDA, INC. ESTABLISHED 1967	GLYNN ARCHER SCHOOL 1300 WHITE STREET KEY WEST, FLORIDA *FOOTING EXCAVATION RESULTS*	*BUILDING "A" FOUNDATIONS*	FIG. 3

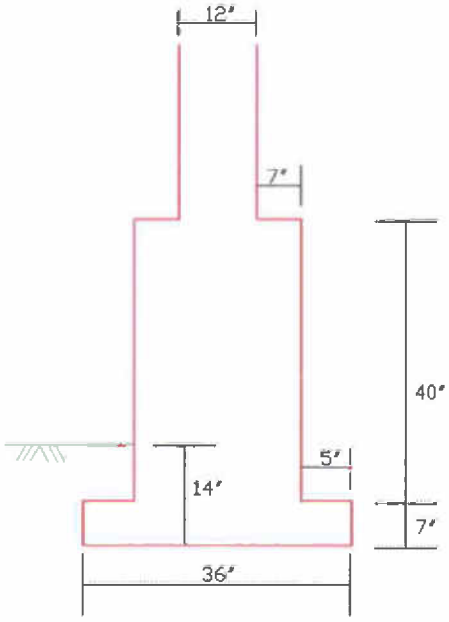

WALL FOUNDATION AT
NORTH SIDE OF BUILDING BY
NORTHEAST BUILDING CORNER
(Side Profile)

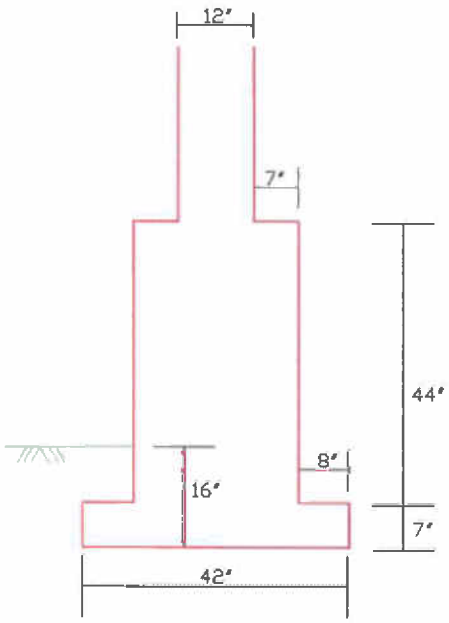

WALL FOUNDATION AT
SOUTH SIDE OF BUILDING AT
SOUTHWEST BUILDING CORNER
(Side Profile)

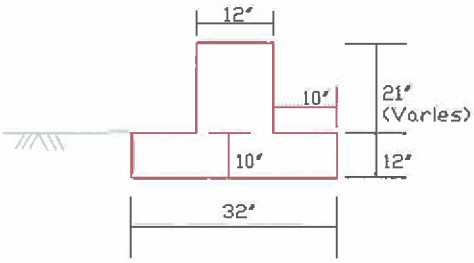

(Side Profile)

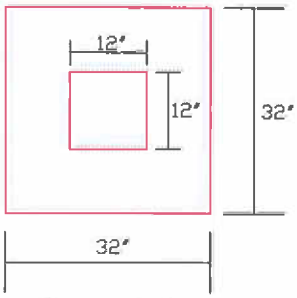

(Top View)

COLUMN FOUNDATION IN
ROOM 107 AT BLDG. "B"

ALL DIMENSIONS PROVIDED HEREIN SHALL BE CONSIDERED APPROXIMATE
DIAGRAMS PROVIDED ARE SPECIFIC TO EXCAVATION AREAS AND MAY VARY THROUGHOUT THE BUILDING

NUTTING ENGINEERS OF FLORIDA, INC. ESTABLISHED 1967	GLYNN ARCHER SCHOOL 1300 WHITE STREET KEY WEST, FLORIDA *FOOTING EXCAVATION RESULTS*	*BUILDING "B" FOUNDATIONS*	FIG. 4

APPENDIX 4:

CONCRETE CORE BREAK TEST RESULTS
(REPORTS 1 and 2)

Nutting Engineers of Florida Inc. | Established 1967
Your Project is Our Commitment

Geotechnical & Construction Materials
Engineering, Testing, & Inspection
Environmental Services

Offices throughout the state of Florida

www.nuttingengineers.com info@nuttingengineers.com

REPORT OF CONCRETE CORE TEST

Client:	CH2M Hill	Report No.:	1
Project:	Glynn Archer School	Date Drilled:	7/17/2012
Project Address:	1300 White St., Key West, Fl	Lab Technician:	R. Ward
Area Cored:	Various Walls of Building A and B		

Lab Number	#1	#2	#3	#4
Identification	Core-1	Core-2	Core-3	Core-4
Location of Cores	Bldg.A, E. Wall, N. of Front Entr.	Bldg.A, S. Wall, 2nd Level At Stairs	Bldg.B, Approx Center of E. Wall, 1st Level	Bldg.B, Approx. Center of W. Wall, 1st Level
Condition of Cores	Good	Good	Good	Good
Date Concrete Placed	Unknown	Unknown	Unknown	Unknown
Date Tested	8/13/2012	8/13/2012	8/13/2012	8/13/2012
Age of Concrete (days)	N/A	N/A	N/A	N/A
Length of Core (capped, in.)	5.70	5.85	5.18	5.64
Diameter of Core (in.)	3.72	3.72	3.72	3.72
Area of Core	10.86	10.86	10.86	10.86
Ratio: Length/Diameter	1.532	1.573	1.392	1.516
Correction Factor	0.96	0.97	0.95	0.96
Total Load Lbs.	22,090	19,230	48,360	36,020
Corrected Total Load Lbs.	21,206	18,653	45,942	34,579
Unit Load Lbs Per Sq. Inch	1952	1717	4229	3183
Type of Break	Cone/Shear	Cone/Shear	Cone/Split	Cone/Shear

Remarks:

CORES GLYNN ARCHER 1 CEG

1310 Neptune Drive • Boynton Beach, Florida 33426 • (561) 736-4900 • Fax (561) 737-9975
Broward (954) 941-8700 • Port St. Lucie (772) 408-1050 • Miami Dade (305) 824-0060

Nutting Engineers
of Florida Inc. | Established 1967
Your Project is Our Commitment

Geotechnical & Construction Materials
Engineering, Testing, & Inspection
Environmental Services

Offices throughout the state of Florida

www.nuttingengineers.com info@nuttingengineers.com

REPORT OF CONCRETE CORE TEST

Client:	CH2M Hill	Report No.:	2
Project:	Glynn Archer School	Date Drilled:	7/17/2012
Project Address:	1300 White St., Key West, Fl	Lab Technician:	R. Ward
Area Cored:	Various Walls and Footings of Building A and B		

Lab Number	#5	#6	#7	
Identification	Core-5	Core-6	Core-7	
Location of Cores	Bldg.B, S. Wall at Stairs, 2nd Level	Bldg.B, Footing at SW Corner	Bldg.B, Footing at NE Corner	
Condition of Cores	Good	Good	Good	
Date Concrete Placed	Unknown	Unknown	Unknown	
Date Tested	8/13/2012	8/13/2012	8/13/2012	
Age of Concrete (days)	N/A	N/A	N/A	
Length of Core (capped, in.)	4.82	7.18	6.27	
Diameter of Core (in.)	3.72	3.72	3.72	
Area of Core	10.86	10.86	10.86	
Ratio: Length/Diameter	1.296	1.930	1.685	
Correction Factor	0.94	1.00	0.97	
Total Load Lbs.	48,460	39,480	42,830	
Corrected Total Load Lbs.	45,552	39,480	41,545	
Unit Load Lbs Per Sq. Inch	4193	3634	3824	
Type of Break	Cone/Shear	Cone/Split	Cone/Shear	

Remarks:

CORES GLYNN ARCHER 2 CEG

1310 Neptune Drive • Boynton Beach, Florida 33426 • (561) 736-4900 • Fax (561) 737-9975
Broward (954) 941-8700 • Port St. Lucie (772) 408-1050 • Miami Dade (305) 824-0060

APPENDIX 5:

REPRESENTATIVE SITE PHOTOGRAPHS
LIMITATIONS OF LIABILITY
SOIL CLASSIFICATION CRITERIA

Glynn Archer School Building Overview

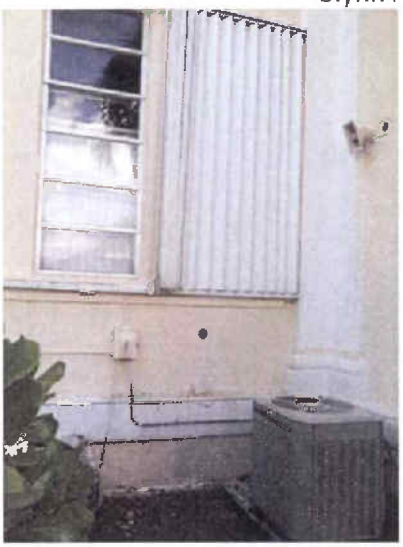

Core #1 - E. Side of Building A North of Front Entrance

Core #2 – Building A South Wall at Stairs, 2nd Level

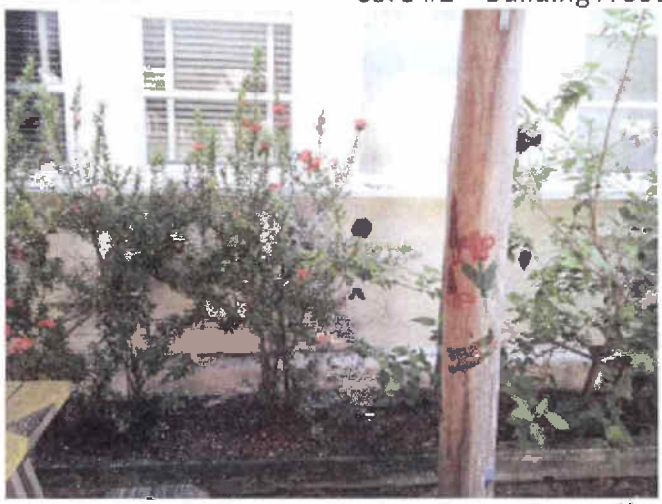

Core #4 - Building B Approx. Center of West Wall, 1st Level

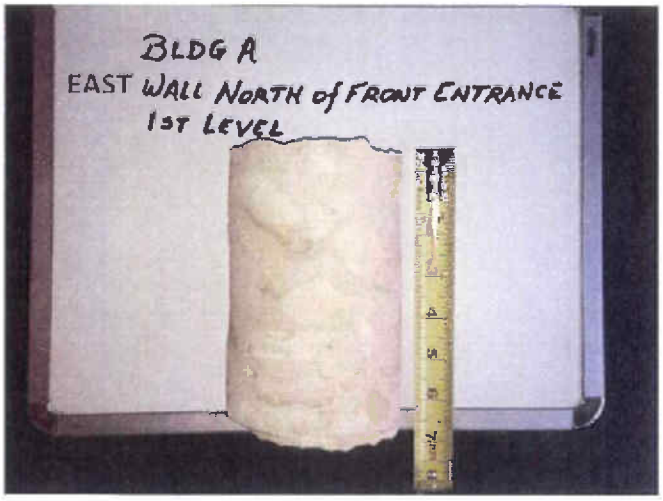

Core #1

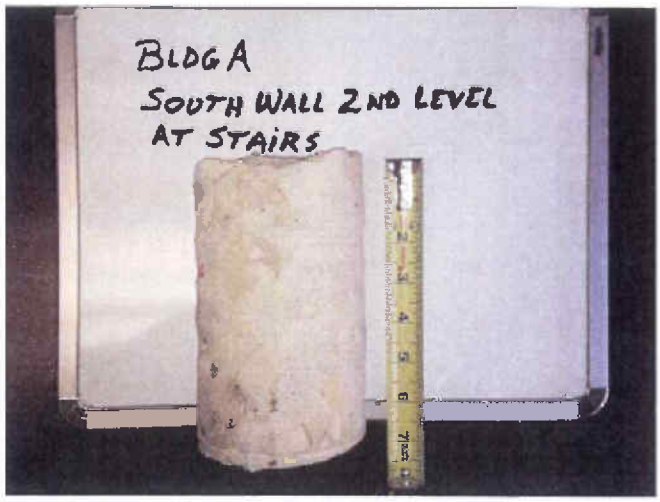

Core #2

Core #3

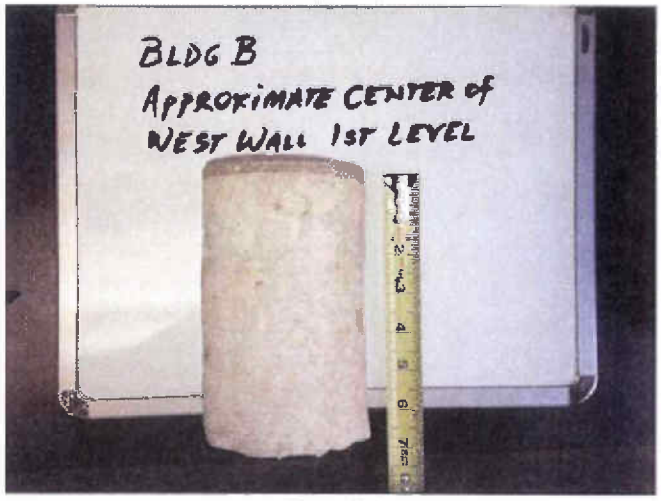

Core #4

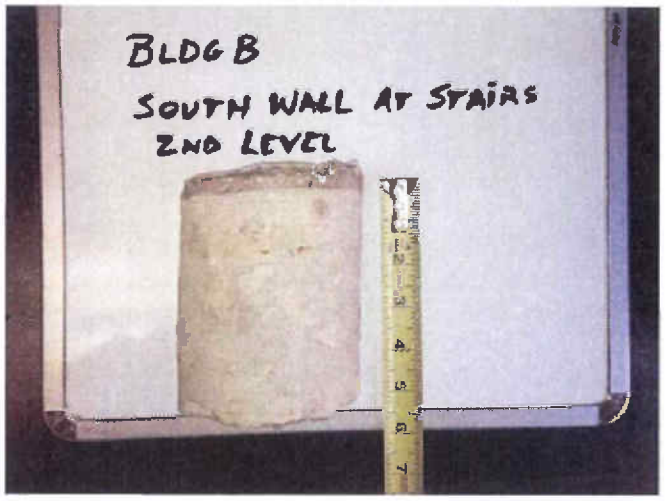

Core #5

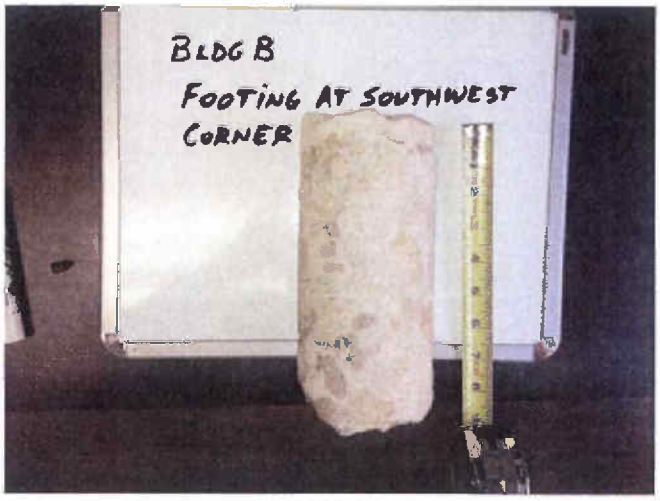

Core #6

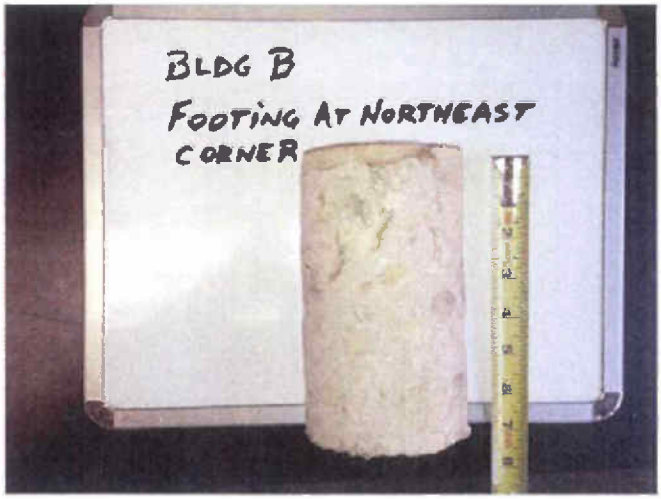

Core #7

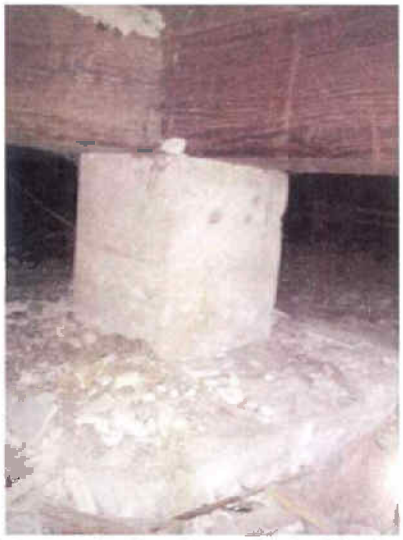

Column Footing Beneath Auditorium

Building A Column Footing Beneath Floor System

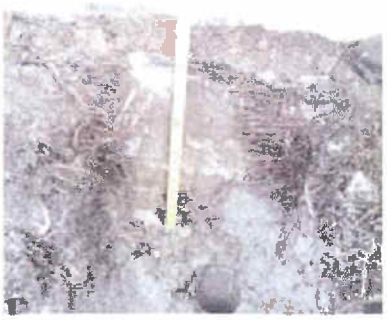

Building B North Wall Footing at NE Corner of Building

Building A East Wall Footing at NE Corner of Building

Building A Windsor Probe Penetrated Decorative Column Feature

Building B South Wall Footing at SW Corner of Building

Building A North Wall Footing at NW Corner of Building

SOIL AND ROCK CLASSIFICATION CRITERIA

SAND/SILT

N-VALUE (bpf)	RELATIVE DENSITY
0 – 4	Very Loose
5 – 10	Loose
11 – 29	Medium
30 – 49	Dense
>50	Very dense
100	Refusal

CLAY/SILTY CLAY

N-VALUE (bpf)	UNCONFINED COMP. STRENGTH (tsf)	CONSISTENCY
<2	<0.25	v. Soft
2 – 4	0.25 – 0.50	Soft
5 – 8	0.50 – 1.00	Medium
9 – 15	1.00 – 2.00	Soft
16 – 30	2.00 – 4.00	v. Stiff
>30	>4.00	Hard

ROCK

N-VALUE (bpf)	RELATIVE HARDNESS	ROCK CHARACTERISTICS
N> 100	Hard to v. hard	Local rock formations vary in hardness from soft to very hard within short vertical and horizontal distances and often contain vertical solution holes of 3 to 36 inch diameter to varying depths and horizontal solution features. Rock may be brittle to split spoon impact, but more resistant to excavation.
25≤ N ≤ 100	Medium hard to hard	
5≤ N ≤ 25	Soft to medium hard	

PARTICLE SIZE

Boulder	>12 in.
Cobble	3 to 12 in.
Gravel	4.76 mm to 3 in.
Sand	0.074 mm to 4.76 mm
Silt	0.005 mm to 0.074 mm
Clay	<0.005 mm

DESCRIPTION MODIFIERS

0 – 5%	Slight trace
6 – 10%	Trace
11 – 20%	Little
21 – 35%	Some
>35%	And

Major Divisions			Group Symbols	Typical names	Laboratory classification criteria		
Coarse-grained soils (More than half of material is larger than No. 200 sieve size)	Gravels (More than half of coarse fraction is larger than No. 4 sieve size)	Clean gravels (Little or no fines)	GW	Well-graded gravels, gravel-sand mixtures, little or no fines	Determine percentages of sand and gravel from grain-size curve. Depending on percentage of fines (fraction smaller than No. 200 sieve size), coarse-grained soils are classified as follows: Less than five percent.....GW, GP, SW, SP; More than 12 percent.....GM, GC, SM, SC; 5 to 12 percent.....Borderline cases requiring dual symbols*	$C_u = \frac{D_{60}}{D_{10}}$ greater than 4; $C_z = \frac{(D_{30})^2}{D_{10} x D_{60}}$ between 1 and 3	
			GP	Poorly graded gravels, gravel-sand mixtures, little or no fines		Not meeting all gradation requirements for GW	
		Gravels with fines (Appreciable amount of fines)	GW* d u	Silty gravels, gravel-sand-silt mixtures		Atterberg limits below "A" line or P.I. less than 4	Above "A" line with P.I. between 4 and 7 are borderline cases requiring use of dual symbols.
			GC	Clayey gravels, gravel-sand-clay mixtures		Atterberg limits above "A" line with P.I. greater than 7	
	Sands (More than half of coarse fraction is smaller than No. 4 sieve size)	Clean sands (Little or no fines)	SW	Well-graded sands, gravelly sands, little or no fines		$C_u = \frac{D_{60}}{D_{10}}$ greater than 6; $C_z = \frac{(D_{30})^2}{D_{10} x D_{60}}$ between 1 and 3	
			SP	Poorly graded sands, gravelly sands, little or no fines		Not meeting all gradation requirements for SW	
		Sands with fines (Appreciable amount of fines)	SM* d u	Silty sands, sand-silt mixtures		Atterberg limits below "A" line or P.I. less than 4	Limits plotting in hatched zone with P.I. between 4 and 7 are borderline cases requiring use of dual system.
			SC	Clayey sands, sand-clay mixtures		Atterberg limits above "A" line with P.I. more than 7	
Fine-grained soils (More than half of material is smaller than No. 200 sieve size)	Silts and clays (Liquid limit less than 50)		ML	Inorganic silts and very fine sands, rock flour, silty or clayey fine sands or clayey silts with slight plasticity	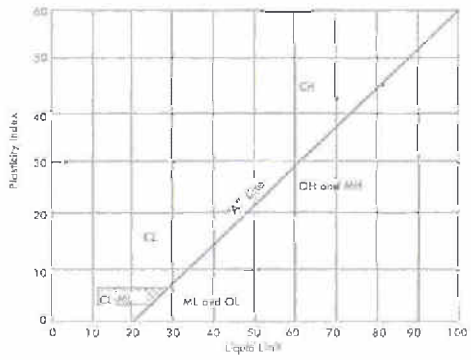		
			CL	Inorganic clays of low to medium plasticity, gravelly clays, sandy clays, silty clays, lean clays			
			OL	Organic silts and organic silty clays of low plasticity			
	Silts and clays (Liquid limit greater than 50)		MH	Inorganic silts, micaceous or diatomaceous fine sandy or silty soils, elastic silts			
			CH	Inorganic clays of high plasticity, fat clays			
			OH	Organic clays of medium to high plasticity, organic silts			
	Highly organic soils		PT	Peat and other highly organic soils			

Plasticity Chart

Nutting Engineers
of Florida Inc. (Established 1967)
Your Project & Our Commitment

LIMITATIONS OF LIABLILITY

WARRANTY

We warranty that the services performed by Nutting Engineers of Florida, Inc. are conducted in a manner consistent with that level of care and skill ordinarily exercised by members of the profession in our area currently practicing under similar conditions at the time our services were performed. ***No other warranties, expressed or implied, are made.*** While the services of Nutting Engineers of Florida, Inc. are a valuable and integral part of the design and construction teams, we do not warrant, guarantee or insure the quality, completeness, or satisfactory performance of designs, construction plans, specifications we have not prepared, nor the ultimate performance of building site materials or assembly/construction.

SUBSURFACE EXPLORATION

Subsurface exploration is normally accomplished by test borings; test pits are sometimes employed. The method of determining the boring location and the surface elevation at the boring is noted in the report. This information is represented in the soil boring logs and/or a drawing. The location and elevation of the borings should be considered accurate only to the degree inherent with the method used and may be approximate.

The soil boring log includes sampling information, description of the materials recovered, approximate depths of boundaries between soil and rock strata as encountered and immediate depth to water data. The log represents conditions recorded specifically at the location where and when the boring was made. Site conditions may vary through time as will subsurface conditions. The boundaries between different soil strata as encountered are indicated at specific depths; however, these depths are in fact approximate and dependent upon the frequency of sampling, nature and consistency of the respective strata. Substantial variation between soil borings may commonly exist in subsurface conditions. Water level readings are made at the time and under conditions stated on the boring logs. Water levels change with time, precipitation, canal level, local well drawdown and other factors. Water level data provided on soil boring logs shall not be relied upon for groundwater based design or construction considerations.

LABORATORY AND FIELD TESTS

Tests are performed in *general* accordance with specific ASTM Standards unless otherwise indicated. All criteria included in a given ASTM Standard are not always required and performed. Each test boring report indicates the measurements and data developed at each specific test location.

ANALYSIS AND RECOMMENDATIONS

The geotechnical report is prepared primarily to aid in the design of site work and structural foundations. Although the information in the report is expected to be sufficient for these purposes, it shall not be utilized to determine the cost of construction nor to stand alone as a construction specification. Contractors shall verify subsurface conditions as may be appropriate prior to undertaking subsurface work.

Report recommendations are based primarily on data from test borings made at the locations shown on the test boring reports. Soil variations commonly exist between boring locations. Such variations may not become evident until construction. Test pits sometimes provide valuable supplemental information that derived from soil borings. If variations are then noted, the geotechnical engineer shall be contacted in writing immediately so that field conditions can be examined and recommendations revised if necessary.

The geotechnical report states our understanding as to the location, dimensions and structural features proposed for the site. ***Any significant changes of the site improvements or site conditions must be communicated in writing to the geotechnical engineer immediately*** so that the geotechnical analysis, conclusions, and recommendations can be reviewed and appropriately adjusted as necessary.

CONSTRUCTION OBSERVATION

Construction observation and testing is an important element of geotechnical services. The geotechnical engineer's field representative (G.E.F.R.) is the "owner's representative" observing the work of the contractor, performing tests and reporting data from such tests and observations. ***The geotechnical engineer's field representative does not direct the contractor's construction means, methods, operations or personnel.*** The G.E.F.R. does not interfere with the relationship between the owner and the contractor and, except as an observer, does not become a substitute owner on site. The G.E.F.R. is responsible for his/her safety, but has no responsibility for the safety of other personnel at the site. The G.E.F.R. is an important member of a team whose responsibility is to observe and test the work being done and report to the owner whether that work is being carried out in general conformance with the plans and specifications. The enclosed report may be relied upon solely by the named client.

Pace Analytical Services, Inc.
3610 Park Central Blvd N
Pompano Beach, FL 33064
954-582-4300

August 27, 2012

Chris Gworek
Nutting Environmental of Florida, Inc.
1310 Neptune Drive
Boynton Beach, FL 33426

RE: Project: CH2M Hill
Pace Project No.: 3566143

Dear Chris Gworek:
Enclosed are the analytical results for sample(s) received by the laboratory on August 24, 2012. The results relate only to the samples included in this report. Results reported herein conform to the most current TNI standards and the laboratory's Quality Assurance Manual, where applicable, unless otherwise noted in the body of the report.

If you have any questions concerning this report, please feel free to contact me.

Sincerely,

Christina Raschke

christina.raschke@pacelabs.com
Project Manager

Enclosures

cc: Jan Beernink, Nutting Environmental of Florida, Inc.

This report shall not be reproduced, except in full,
without the written consent of Pace Analytical Services, Inc..

Pace Analytical Services, Inc.
3610 Park Central Blvd N
Pompano Beach, FL 33064
954-582-4300

CERTIFICATIONS

Project: CH2M Hill
Pace Project No.: 3566143

Ormond Beach Certification IDs
8 East Tower Circle, Ormond Beach, FL 32174
Alabama Certification #: 41320
Arizona Certification #: AZ0735
Colorado Certification: FL NELAC Reciprocity
Connecticut Certification #: PH 0216
Florida Certification #: E83079
Georgia Certification #: 955
Guam Certification: FL NELAC Reciprocity
Hawaii Certification: FL NELAC Reciprocity
Illinois Certification #: 200068
Indiana Certification: FL NELAC Reciprocity
Kansas Certification #: E-10383
Kentucky Certification #: 90050
Louisiana Certification #: FL NELAC Reciprocity
Louisiana Environmental Certificate #: 05007
Maine Certification #: FL01264
Massachusetts Certification #: M-FL1264
Michigan Certification #: 9911
Mississippi Certification: FL NELAC Reciprocity
Missouri Certification #: 236
Montana Certification #: Cert 0074
Nevada Certification: FL NELAC Reciprocity
New Hampshire Certification #: 2958
New Jersey Certification #: FL765
New York Certification #: 11608
North Carolina Environmental Certificate #: 667
North Carolina Certification #: 12710
Pennsylvania Certification #: 68-00547
Puerto Rico Certification #: FL01264
Tennessee Certification #: TN02974
Texas Certification: FL NELAC Reciprocity
US Virgin Islands Certification: FL NELAC Reciprocity
Virginia Environmental Certification #: 460165
Washington Certification #: C955
West Virginia Certification #: 9962C
Wisconsin Certification #: 399079670
Wyoming (EPA Region 8): FL NELAC Reciprocity

This report shall not be reproduced, except in full,
without the written consent of Pace Analytical Services, Inc..

Pace Analytical Services, Inc.
3610 Park Central Blvd N
Pompano Beach, FL 33064
954-582-4300

SAMPLE SUMMARY

Project: CH2M Hill
Pace Project No.: 3566143

Lab ID	Sample ID	Matrix	Date Collected	Date Received
3566143001	**SS-1**	Solid	08/10/12 00:00	08/24/12 16:30
3566143002	**SS-2**	Solid	08/10/12 00:00	08/24/12 16:30
3566143003	**SS-3**	Solid	08/10/12 00:00	08/24/12 16:30
3566143004	**SS-4**	Solid	08/10/12 00:00	08/24/12 16:30
3566143005	**SS-5**	Solid	08/10/12 00:00	08/24/12 16:30
3566143006	**SS-6**	Solid	08/10/12 00:00	08/24/12 16:30
3566143007	**SS-7**	Solid	08/10/12 00:00	08/24/12 16:30

This report shall not be reproduced, except in full,
without the written consent of Pace Analytical Services, Inc..

Pace Analytical Services, Inc.
3610 Park Central Blvd N
Pompano Beach, FL 33064
954-582-4300

SAMPLE ANALYTE COUNT

Project: CH2M Hill
Pace Project No.: 3566143

Lab ID	Sample ID	Method	Analysts	Analytes Reported	Laboratory
3566143001	**SS-1**	ASTM D2974-87	WMW	1	PASI-O
		EPA 9045	MMD	1	PASI-O
		EPA 9056	IRL	1	PASI-O
3566143002	**SS-2**	ASTM D2974-87	WMW	1	PASI-O
		EPA 9045	MMD	1	PASI-O
		EPA 9056	IRL	1	PASI-O
3566143003	**SS-3**	ASTM D2974-87	WMW	1	PASI-O
		EPA 9045	MMD	1	PASI-O
		EPA 9056	IRL	1	PASI-O
3566143004	**SS-4**	ASTM D2974-87	WMW	1	PASI-O
		EPA 9045	MMD	1	PASI-O
		EPA 9056	IRL	1	PASI-O
3566143005	**SS-5**	ASTM D2974-87	WMW	1	PASI-O
		EPA 9045	MMD	1	PASI-O
		EPA 9056	IRL	1	PASI-O
3566143006	**SS-6**	ASTM D2974-87	WMW	1	PASI-O
		EPA 9045	MMD	1	PASI-O
		EPA 9056	IRL	1	PASI-O
3566143007	**SS-7**	ASTM D2974-87	WMW	1	PASI-O
		EPA 9045	MMD	1	PASI-O
		EPA 9056	IRL	1	PASI-O

This report shall not be reproduced, except in full,
without the written consent of Pace Analytical Services, Inc..

Pace Analytical Services, Inc.
3610 Park Central Blvd N
Pompano Beach, FL 33064
954-582-4300

HITS ONLY

Project: CH2M Hill
Pace Project No.: 3566143

Lab Sample ID / Method	Client Sample ID / Parameters	Result	Units	Report Limit	Analyzed	Qualifiers
3566143001	**SS-1**					
ASTM D2974-87	Percent Moisture	2.1	%	0.10	08/25/12 01:34	
EPA 9045	pH at 25 Degrees C	12.4	Std. Units	0.10	08/27/12 13:31	Q
3566143002	**SS-2**					
ASTM D2974-87	Percent Moisture	2.0	%	0.10	08/25/12 01:34	
EPA 9045	pH at 25 Degrees C	12.5	Std. Units	0.10	08/27/12 13:31	Q
3566143003	**SS-3**					
ASTM D2974-87	Percent Moisture	1.8	%	0.10	08/25/12 01:35	
EPA 9045	pH at 25 Degrees C	12.4	Std. Units	0.10	08/27/12 13:31	Q
EPA 9056	Chloride	507	mg/kg	253	08/26/12 22:56	
3566143004	**SS-4**					
ASTM D2974-87	Percent Moisture	2.2	%	0.10	08/25/12 01:36	
EPA 9045	pH at 25 Degrees C	11.3	Std. Units	0.10	08/27/12 13:31	Q
EPA 9056	Chloride	745	mg/kg	256	08/26/12 23:08	
3566143005	**SS-5**					
ASTM D2974-87	Percent Moisture	2.2	%	0.10	08/25/12 01:37	
EPA 9045	pH at 25 Degrees C	11.3	Std. Units	0.10	08/27/12 13:31	Q
EPA 9056	Chloride	348	mg/kg	257	08/26/12 23:20	
3566143006	**SS-6**					
ASTM D2974-87	Percent Moisture	2.7	%	0.10	08/25/12 01:39	
EPA 9045	pH at 25 Degrees C	9.9	Std. Units	0.10	08/27/12 13:31	Q
3566143007	**SS-7**					
ASTM D2974-87	Percent Moisture	2.6	%	0.10	08/25/12 01:39	
EPA 9045	pH at 25 Degrees C	11.0	Std. Units	0.10	08/27/12 13:31	Q
EPA 9056	Chloride	252 I	mg/kg	258	08/26/12 23:44	

This report shall not be reproduced, except in full,
without the written consent of Pace Analytical Services, Inc..

Pace Analytical Services, Inc.
3610 Park Central Blvd N
Pompano Beach, FL 33064
954-582-4300

ANALYTICAL RESULTS

Project: CH2M Hill
Pace Project No.: 3566143

Sample: SS-1 **Lab ID: 3566143001** Collected: 08/10/12 00:00 Received: 08/24/12 16:30 Matrix: Solid

Results reported on a "dry-weight" basis

Parameters	Results	Units	PQL	MDL	DF	Prepared	Analyzed	CAS No.	Qual
Percent Moisture	Analytical Method: ASTM D2974-87								
Percent Moisture	**2.1**	%	0.10	0.10	1		08/25/12 01:34		
9045 pH Soil	Analytical Method: EPA 9045								
pH at 25 Degrees C	**12.4**	Std. Units	0.10	0.10	1		08/27/12 13:31		Q
9056 IC Anions	Analytical Method: EPA 9056								
Chloride	**128U**	mg/kg	255	128	5		08/26/12 22:07	16887-00-6	

This report shall not be reproduced, except in full,
without the written consent of Pace Analytical Services, Inc..

Pace Analytical Services, Inc.
3610 Park Central Blvd N
Pompano Beach, FL 33064
954-582-4300

ANALYTICAL RESULTS

Project: CH2M Hill
Pace Project No.: 3566143

Sample: SS-2 **Lab ID: 3566143002** Collected: 08/10/12 00:00 Received: 08/24/12 16:30 Matrix: Solid

Results reported on a "dry-weight" basis

Parameters	Results	Units	PQL	MDL	DF	Prepared	Analyzed	CAS No.	Qual
Percent Moisture	Analytical Method: ASTM D2974-87								
Percent Moisture	**2.0**	%	0.10	0.10	1		08/25/12 01:34		
9045 pH Soil	Analytical Method: EPA 9045								
pH at 25 Degrees C	**12.5**	Std. Units	0.10	0.10	1		08/27/12 13:31		Q
9056 IC Anions	Analytical Method: EPA 9056								
Chloride	**128U**	mg/kg	256	128	5		08/26/12 22:44	16887-00-6	

This report shall not be reproduced, except in full,
without the written consent of Pace Analytical Services, Inc..

Pace Analytical Services, Inc.
3610 Park Central Blvd N
Pompano Beach, FL 33064
954-582-4300

ANALYTICAL RESULTS

Project: CH2M Hill
Pace Project No.: 3566143

Sample: SS-3 **Lab ID: 3566143003** Collected: 08/10/12 00:00 Received: 08/24/12 16:30 Matrix: Solid

Results reported on a "dry-weight" basis

Parameters	Results	Units	PQL	MDL	DF	Prepared	Analyzed	CAS No.	Qual
Percent Moisture	Analytical Method: ASTM D2974-87								
Percent Moisture	**1.8**	%	0.10	0.10	1		08/25/12 01:35		
9045 pH Soil	Analytical Method: EPA 9045								
pH at 25 Degrees C	**12.4**	Std. Units	0.10	0.10	1		08/27/12 13:31		Q
9056 IC Anions	Analytical Method: EPA 9056								
Chloride	**507**	mg/kg	253	126	5		08/26/12 22:56	16887-00-6	

This report shall not be reproduced, except in full,
without the written consent of Pace Analytical Services, Inc..

Pace Analytical Services, Inc.
3610 Park Central Blvd N
Pompano Beach, FL 33064
954-582-4300

ANALYTICAL RESULTS

Project: CH2M Hill
Pace Project No.: 3566143

Sample: SS-4 **Lab ID: 3566143004** Collected: 08/10/12 00:00 Received: 08/24/12 16:30 Matrix: Solid

Results reported on a "dry-weight" basis

Parameters	Results	Units	PQL	MDL	DF	Prepared	Analyzed	CAS No.	Qual
Percent Moisture	Analytical Method: ASTM D2974-87								
Percent Moisture	**2.2**	%	0.10	0.10	1		08/25/12 01:36		
9045 pH Soil	Analytical Method: EPA 9045								
pH at 25 Degrees C	**11.3**	Std. Units	0.10	0.10	1		08/27/12 13:31		Q
9056 IC Anions	Analytical Method: EPA 9056								
Chloride	**745**	mg/kg	256	128	5		08/26/12 23:08	16887-00-6	

This report shall not be reproduced, except in full,
without the written consent of Pace Analytical Services, Inc..

Pace Analytical Services, Inc.
3610 Park Central Blvd N
Pompano Beach, FL 33064
954-582-4300

ANALYTICAL RESULTS

Project: CH2M Hill
Pace Project No.: 3566143

Sample: SS-5 **Lab ID: 3566143005** Collected: 08/10/12 00:00 Received: 08/24/12 16:30 Matrix: Solid

Results reported on a "dry-weight" basis

Parameters	Results	Units	PQL	MDL	DF	Prepared	Analyzed	CAS No.	Qual
Percent Moisture	Analytical Method: ASTM D2974-87								
Percent Moisture	**2.2**	%	0.10	0.10	1		08/25/12 01:37		
9045 pH Soil	Analytical Method: EPA 9045								
pH at 25 Degrees C	**11.3**	Std. Units	0.10	0.10	1		08/27/12 13:31		Q
9056 IC Anions	Analytical Method: EPA 9056								
Chloride	**348**	mg/kg	257	128	5		08/26/12 23:20	16887-00-6	

This report shall not be reproduced, except in full,
without the written consent of Pace Analytical Services, Inc..

Pace Analytical Services, Inc.
3610 Park Central Blvd N
Pompano Beach, FL 33064
954-582-4300

ANALYTICAL RESULTS

Project: CH2M Hill
Pace Project No.: 3566143

Sample: SS-6 **Lab ID: 3566143006** Collected: 08/10/12 00:00 Received: 08/24/12 16:30 Matrix: Solid

Results reported on a "dry-weight" basis

Parameters	Results	Units	PQL	MDL	DF	Prepared	Analyzed	CAS No.	Qual
Percent Moisture	Analytical Method: ASTM D2974-87								
Percent Moisture	**2.7**	%	0.10	0.10	1		08/25/12 01:39		
9045 pH Soil	Analytical Method: EPA 9045								
pH at 25 Degrees C	**9.9**	Std. Units	0.10	0.10	1		08/27/12 13:31		Q
9056 IC Anions	Analytical Method: EPA 9056								
Chloride	**129U**	mg/kg	258	129	5		08/26/12 23:32	16887-00-6	

This report shall not be reproduced, except in full,
without the written consent of Pace Analytical Services, Inc..

Pace Analytical Services, Inc.
3610 Park Central Blvd N
Pompano Beach, FL 33064
954-582-4300

ANALYTICAL RESULTS

Project: CH2M Hill
Pace Project No.: 3566143

Sample: SS-7 **Lab ID: 3566143007** Collected: 08/10/12 00:00 Received: 08/24/12 16:30 Matrix: Solid

Results reported on a "dry-weight" basis

Parameters	Results	Units	PQL	MDL	DF	Prepared	Analyzed	CAS No.	Qual
Percent Moisture	Analytical Method: ASTM D2974-87								
Percent Moisture	**2.6**	%	0.10	0.10	1		08/25/12 01:39		
9045 pH Soil	Analytical Method: EPA 9045								
pH at 25 Degrees C	**11.0**	Std. Units	0.10	0.10	1		08/27/12 13:31		Q
9056 IC Anions	Analytical Method: EPA 9056								
Chloride	**252 I**	mg/kg	258	129	5		08/26/12 23:44	16887-00-6	

This report shall not be reproduced, except in full,
without the written consent of Pace Analytical Services, Inc..

Pace Analytical Services, Inc.
3610 Park Central Blvd N
Pompano Beach, FL 33064
954-582-4300

QUALITY CONTROL DATA

Project: CH2M Hill
Pace Project No.: 3566143

QC Batch: PMST/1325 Analysis Method: ASTM D2974-87
QC Batch Method: ASTM D2974-87 Analysis Description: Dry Weight/Percent Moisture
Associated Lab Samples: 3566143001, 3566143002, 3566143003, 3566143004, 3566143005, 3566143006, 3566143007

SAMPLE DUPLICATE: 454013

Parameter	Units	3565963001 Result	Dup Result	RPD	Max RPD	Qualifiers
Percent Moisture	%	0.11	0.11	2	10	

SAMPLE DUPLICATE: 454014

Parameter	Units	3566143002 Result	Dup Result	RPD	Max RPD	Qualifiers
Percent Moisture	%	2.0	2.2	8	10	

SAMPLE DUPLICATE: 454015

Parameter	Units	3566023006 Result	Dup Result	RPD	Max RPD	Qualifiers
Percent Moisture	%	5.6	5.6	.08	10	

SAMPLE DUPLICATE: 454016

Parameter	Units	3566033005 Result	Dup Result	RPD	Max RPD	Qualifiers
Percent Moisture	%	14.9	17.7	17	10	J(D6)

This report shall not be reproduced, except in full,
without the written consent of Pace Analytical Services, Inc..

Pace Analytical Services, Inc.
3610 Park Central Blvd N
Pompano Beach, FL 33064
954-582-4300

QUALITY CONTROL DATA

Project: CH2M Hill
Pace Project No.: 3566143

QC Batch: WET/14818 Analysis Method: EPA 9045
QC Batch Method: EPA 9045 Analysis Description: 9045 pH
Associated Lab Samples: 3566143001, 3566143002, 3566143003, 3566143004, 3566143005, 3566143006, 3566143007

SAMPLE DUPLICATE: 454424

Parameter	Units	3565783001 Result	Dup Result	RPD	Max RPD	Qualifiers
pH at 25 Degrees C	Std. Units	6.2	6.2	0	20	Q

This report shall not be reproduced, except in full,
without the written consent of Pace Analytical Services, Inc..

Pace Analytical Services, Inc.
3610 Park Central Blvd N
Pompano Beach, FL 33064
954-582-4300

QUALITY CONTROL DATA

Project: CH2M Hill
Pace Project No.: 3566143

QC Batch: WETA/19543 Analysis Method: EPA 9056
QC Batch Method: EPA 9056 Analysis Description: 9056 IC Anions
Associated Lab Samples: 3566143001, 3566143002, 3566143003, 3566143004, 3566143005, 3566143006, 3566143007

METHOD BLANK: 454281 Matrix: Solid
Associated Lab Samples: 3566143001, 3566143002, 3566143003, 3566143004, 3566143005, 3566143006, 3566143007

Parameter	Units	Blank Result	Reporting Limit	Analyzed	Qualifiers
Chloride	mg/kg	25.0U	50.0	08/26/12 21:43	

LABORATORY CONTROL SAMPLE: 454282

Parameter	Units	Spike Conc.	LCS Result	LCS % Rec	% Rec Limits	Qualifiers
Chloride	mg/kg	500	532	106	80-120	

MATRIX SPIKE SAMPLE: 454284

Parameter	Units	3566143001 Result	Spike Conc.	MS Result	MS % Rec	% Rec Limits	Qualifiers
Chloride	mg/kg	128U	2550	2550	95	80-120	

SAMPLE DUPLICATE: 454283

Parameter	Units	3566143001 Result	Dup Result	RPD	Max RPD	Qualifiers
Chloride	mg/kg	128U	128U		20	

This report shall not be reproduced, except in full,
without the written consent of Pace Analytical Services, Inc..

Pace Analytical Services, Inc.
3610 Park Central Blvd N
Pompano Beach, FL 33064
954-582-4300

QUALIFIERS

Project: CH2M Hill
Pace Project No.: 3566143

DEFINITIONS

DF - Dilution Factor, if reported, represents the factor applied to the reported data due to changes in sample preparation, dilution of the sample aliquot, or moisture content.

ND - Not Detected at or above adjusted reporting limit.

MDL - Adjusted Method Detection Limit.

PRL - Pace Reporting Limit.

RL - Reporting Limit.

S - Surrogate

1,2-Diphenylhydrazine (8270 listed analyte) decomposes to Azobenzene.

Consistent with EPA guidelines, unrounded data are displayed and have been used to calculate % recovery and RPD values.

LCS(D) - Laboratory Control Sample (Duplicate)

MS(D) - Matrix Spike (Duplicate)

DUP - Sample Duplicate

RPD - Relative Percent Difference

NC - Not Calculable.

SG - Silica Gel - Clean-Up

U - Indicates the compound was analyzed for, but not detected.

N-Nitrosodiphenylamine decomposes and cannot be separated from Diphenylamine using Method 8270. The result reported for each analyte is a combined concentration.

Pace Analytical is TNI accredited. Contact your Pace PM for the current list of accredited analytes.

TNI - The NELAC Institute.

LABORATORIES

PASI-O	Pace Analytical Services - Ormond Beach

ANALYTE QUALIFIERS

I	The reported value is between the laboratory method detection limit and the laboratory practical quantitation limit.
J(D6)	Estimated Value. The relative percent difference (RPD) between the sample and sample duplicate exceeded laboratory control limits.
Q	Sample held beyond the accepted holding time.

This report shall not be reproduced, except in full,
without the written consent of Pace Analytical Services, Inc..

Pace Analytical Services, Inc.
3610 Park Central Blvd N
Pompano Beach, FL 33064
954-582-4300

QUALITY CONTROL DATA CROSS REFERENCE TABLE

Project: CH2M Hill
Pace Project No.: 3566143

Lab ID	Sample ID	QC Batch Method	QC Batch	Analytical Method	Analytical Batch
3566143001	**SS-1**	ASTM D2974-87	PMST/1325		
3566143002	**SS-2**	ASTM D2974-87	PMST/1325		
3566143003	**SS-3**	ASTM D2974-87	PMST/1325		
3566143004	**SS-4**	ASTM D2974-87	PMST/1325		
3566143005	**SS-5**	ASTM D2974-87	PMST/1325		
3566143006	**SS-6**	ASTM D2974-87	PMST/1325		
3566143007	**SS-7**	ASTM D2974-87	PMST/1325		
3566143001	**SS-1**	EPA 9045	WET/14818		
3566143002	**SS-2**	EPA 9045	WET/14818		
3566143003	**SS-3**	EPA 9045	WET/14818		
3566143004	**SS-4**	EPA 9045	WET/14818		
3566143005	**SS-5**	EPA 9045	WET/14818		
3566143006	**SS-6**	EPA 9045	WET/14818		
3566143007	**SS-7**	EPA 9045	WET/14818		
3566143001	**SS-1**	EPA 9056	WETA/19543		
3566143002	**SS-2**	EPA 9056	WETA/19543		
3566143003	**SS-3**	EPA 9056	WETA/19543		
3566143004	**SS-4**	EPA 9056	WETA/19543		
3566143005	**SS-5**	EPA 9056	WETA/19543		
3566143006	**SS-6**	EPA 9056	WETA/19543		
3566143007	**SS-7**	EPA 9056	WETA/19543		

This report shall not be reproduced, except in full,
without the written consent of Pace Analytical Services, Inc..

Pace Analytical®
www.pacelabs.com

Pace Analytical Services, Inc.
3610 Park Central Blvd N
Pompano Beach, FL 33064
954-582-4300

ANALYTICAL RESULTS

Project: CH2M Hill
Pace Project No.: 3566143

BLDG A EAST WALL NORTH of FRONT ENTRANCE
1ST LEVEL

Sample: SS-1 **Lab ID: 3566143001** Collected: 08/10/12 00:00 Received: 08/24/12 16:30 Matrix: Solid

Results reported on a "dry-weight" basis

Parameters	Results	Units	PQL	MDL	DF	Prepared	Analyzed	CAS No.	Qual
Percent Moisture	Analytical Method: ASTM D2974-87								
Percent Moisture	**2.1**	%	0.10	0.10	1		08/25/12 01:34		
9045 pH Soil	Analytical Method: EPA 9045								
pH at 25 Degrees C	**12.4**	Std. Units	0.10	0.10	1		08/27/12 13:31		Q
9056 IC Anions	Analytical Method: EPA 9056								
Chloride	**128U**	mg/kg	255	128	5		08/26/12 22:07	16887-00-6	

This report shall not be reproduced, except in full,
without the written consent of Pace Analytical Services, Inc..

Pace Analytical®
www.pacelabs.com

Pace Analytical Services, Inc.
3610 Park Central Blvd N
Pompano Beach, FL 33064
954-582-4300

ANALYTICAL RESULTS

BLDG A SOUTH WALL 2ND LEVEL AT STAIRS

Project: CH2M Hill
Pace Project No.: 3566143

Sample: SS-2 **Lab ID: 3566143002** Collected: 08/10/12 00:00 Received: 08/24/12 16:30 Matrix: Solid

Results reported on a "dry-weight" basis

Parameters	Results	Units	PQL	MDL	DF	Prepared	Analyzed	CAS No.	Qual
Percent Moisture	Analytical Method: ASTM D2974-87								
Percent Moisture	**2.0**	%	0.10	0.10	1		08/25/12 01:34		
9045 pH Soil	Analytical Method: EPA 9045								
pH at 25 Degrees C	**12.5**	Std. Units	0.10	0.10	1		08/27/12 13:31		Q
9056 IC Anions	Analytical Method: EPA 9056								
Chloride	**128U**	mg/kg	256	128	5		08/26/12 22:44	16887-00-6	

This report shall not be reproduced, except in full,
without the written consent of Pace Analytical Services, Inc..

Pace Analytical®
www.pacelabs.com

Pace Analytical Services, Inc.
3610 Park Central Blvd N
Pompano Beach, FL 33064
954-582-4300

ANALYTICAL RESULTS

Project: CH2M Hill
Pace Project No.: 3566143

BLDG B APPROX. CENTER of EAST WALL
1ST LEVEL

Sample: SS-3 **Lab ID: 3566143003** Collected: 08/10/12 00:00 Received: 08/24/12 16:30 Matrix: Solid

Results reported on a "dry-weight" basis

Parameters	Results	Units	PQL	MDL	DF	Prepared	Analyzed	CAS No.	Qual
Percent Moisture	Analytical Method: ASTM D2974-87								
Percent Moisture	**1.8**	%	0.10	0.10	1		08/25/12 01:35		
9045 pH Soil	Analytical Method: EPA 9045								
pH at 25 Degrees C	**12.4**	Std. Units	0.10	0.10	1		08/27/12 13:31		Q
9056 IC Anions	Analytical Method: EPA 9056								
Chloride	**507**	mg/kg	253	126	5		08/26/12 22:56	16887-00-6	

This report shall not be reproduced, except in full,
without the written consent of Pace Analytical Services, Inc..

Pace Analytical Services, Inc.
3610 Park Central Blvd N
Pompano Beach, FL 33064
954-582-4300

ANALYTICAL RESULTS

Project: CH2M Hill
Pace Project No.: 3566143

BLDG B APPROX. CENTER of WEST WALL
1ST LEVEL

Sample: SS-4 **Lab ID: 3566143004** Collected: 08/10/12 00:00 Received: 08/24/12 16:30 Matrix: Solid

Results reported on a "dry-weight" basis

Parameters	Results	Units	PQL	MDL	DF	Prepared	Analyzed	CAS No.	Qual
Percent Moisture	Analytical Method: ASTM D2974-87								
Percent Moisture	**2.2**	%	0.10	0.10	1		08/25/12 01:36		
9045 pH Soil	Analytical Method: EPA 9045								
pH at 25 Degrees C	**11.3**	Std. Units	0.10	0.10	1		08/27/12 13:31		Q
9056 IC Anions	Analytical Method: EPA 9056								
Chloride	**745**	mg/kg	256	128	5		08/26/12 23:08	16887-00-6	

This report shall not be reproduced, except in full,
without the written consent of Pace Analytical Services, Inc..

Pace Analytical®
www.pacelabs.com

Pace Analytical Services, Inc.
3610 Park Central Blvd N
Pompano Beach, FL 33064
954-582-4300

ANALYTICAL RESULTS

Project: CH2M Hill
Pace Project No.: 3566143

BLDG B SOUTH WALL AT STAIRS
2ND LEVEL

Sample: SS-5 **Lab ID: 3566143005** Collected: 08/10/12 00:00 Received: 08/24/12 16:30 Matrix: Solid

Results reported on a "dry-weight" basis

Parameters	Results	Units	PQL	MDL	DF	Prepared	Analyzed	CAS No.	Qual
Percent Moisture	Analytical Method: ASTM D2974-87								
Percent Moisture	**2.2**	%	0.10	0.10	1		08/25/12 01:37		
9045 pH Soil	Analytical Method: EPA 9045								
pH at 25 Degrees C	**11.3**	Std. Units	0.10	0.10	1		08/27/12 13:31		Q
9056 IC Anions	Analytical Method: EPA 9056								
Chloride	**348**	mg/kg	257	128	5		08/26/12 23:20	16887-00-6	

This report shall not be reproduced, except in full,
without the written consent of Pace Analytical Services, Inc..

Pace Analytical Services, Inc.
3610 Park Central Blvd N
Pompano Beach, FL 33064
954-582-4300

ANALYTICAL RESULTS

BLDG B FOOTING AT SW CORNER OF BLDG.

Project: CH2M Hill
Pace Project No.: 3566143

Sample: SS-6 **Lab ID: 3566143006** Collected: 08/10/12 00:00 Received: 08/24/12 16:30 Matrix: Solid

Results reported on a "dry-weight" basis

Parameters	Results	Units	PQL	MDL	DF	Prepared	Analyzed	CAS No.	Qual
Percent Moisture	Analytical Method: ASTM D2974-87								
Percent Moisture	**2.7**	%	0.10	0.10	1		08/25/12 01:39		
9045 pH Soil	Analytical Method: EPA 9045								
pH at 25 Degrees C	**9.9**	Std. Units	0.10	0.10	1		08/27/12 13:31		Q
9056 IC Anions	Analytical Method: EPA 9056								
Chloride	**129U**	mg/kg	258	129	5		08/26/12 23:32	16887-00-6	

This report shall not be reproduced, except in full,
without the written consent of Pace Analytical Services, Inc..

Pace Analytical Services, Inc.
3610 Park Central Blvd N
Pompano Beach, FL 33064
954-582-4300

ANALYTICAL RESULTS

BLDG B FOOTING AT NE CORNER of BLDG.

Project: CH2M Hill
Pace Project No.: 3566143

Sample: SS-7 **Lab ID: 3566143007** Collected: 08/10/12 00:00 Received: 08/24/12 16:30 Matrix: Solid

Results reported on a "dry-weight" basis

Parameters	Results	Units	PQL	MDL	DF	Prepared	Analyzed	CAS No.	Qual
Percent Moisture	Analytical Method: ASTM D2974-87								
Percent Moisture	**2.6**	%	0.10	0.10	1		08/25/12 01:39		
9045 pH Soil	Analytical Method: EPA 9045								
pH at 25 Degrees C	**11.0**	Std. Units	0.10	0.10	1		08/27/12 13:31		Q
9056 IC Anions	Analytical Method: EPA 9056								
Chloride	**252 I**	mg/kg	258	129	5		08/26/12 23:44	16887-00-6	

This report shall not be reproduced, except in full,
without the written consent of Pace Analytical Services, Inc..

Appendix D
EE&G (Hazardous Material Testing)

EE&G
Environmental Services, LLC

5751 Miami Lakes Drive
Miami Lakes, Florida 33014
Tel (305) 374-8300
Fax (305) 374-9004
www.eeandg.com

August 17, 2012
EE&G Project No. 2012-2373

Mr. Andrew H. Smyth
CH2M Hill
6410 5th Street, Suite 2A
Key West, Florida 33040

Subject: Dust Wipe Sampling for Lead
Glynn Archer Elementary School
Buildings A, B and Auditorium
1302 White Street
Key West, Florida

Dear Mr. Smyth:

At the request of CH2M Hill, EE&G Environmental Services L.L.C. (EE&G) conducted limited lead dust sampling at the subject property. Initial background sampling was conducted on July 16, 2012. Follow-up post testing was conducted on July 24 and 31, 2012. All testing was performed by certified Lead Risk Assessor Hiram Aguiar of EE&G. The purpose of the sampling was to determine the presence of lead in dust on floor surfaces impacted during exploratory engineering studies by CH2M Hill.

METHODS

Wipe samples of dust on various floor surfaces impacted during the renovation at Building A, B, and Auditorium were collected using protocols described by the Department of Housing and Urban Development (HUD), the Environmental Protection Agency (EPA), and the American Society for Testing and Materials (ASTM E 1728). The wipe samples were delivered to EMSL in Cinnaminson, New Jersey, for analysis of total lead by Flame AAS (Method SW 846, 7420). EMSL participates in the American Industrial Hygiene Association's (AIHA) Environmental Lead Laboratory Approval Program.

LIMITATIONS

This report has been prepared by EE&G in a manner consistent with standards exercised by members of the lead inspection profession practicing under similar conditions. No other warranty, expressed or implied is made. The intent of this report is to assist the client in assessing the occurrence of lead in dust. Under no circumstances is this letter to be utilized as a proposal or a project specification document without the written consent of EE&G.

EE&G's interpretations and recommendations are based upon the results of the sample analyses in compliance with environmental regulations, and information provided to EE&G by the client.

This report was prepared solely for the use of EE&G's client, and is not intended for use by third party beneficiaries. The client shall indemnify and hold EE&G harmless against any liability for any loss arising out of or relating to reliance by any third party on any work performed thereunder, or the contents of this report. EE&G will not be held responsible for the interpretation or use by others of data developed pursuant to the compilation of this report, nor for use of segregated portions of this report.

RESULTS

The EPA has established standards for lead in dust under the Residential Lead-Based Paint Hazard Reduction Act of 1992. Acceptable levels for lead in dust are 40 micrograms per square foot (ug/ft^2) for floors, 250 ug/ft^2 for interior window sills, and 400 ug/ft^2 for window troughs. Results of the analyses of three dust wipe samples indicated that all three samples had concentrations below detection limits. The laboratory report for the wipe sample analyses is attached.

CONCLUSIONS AND RECOMMENDATIONS

Testing conducted on July 24, 2012 after completion of the renovation work at Glynn Archer Elementary School reported 32 of the 34 dust samples collected had lead concentrations below the detection limit of the laboratory method. One of the 34 samples collected had lead concentrations well below the acceptable clearance levels. Sample #16 collected at Building B in Room 104 had a measured lead concentration of 350 ug/ft^2. This value well exceeds the acceptable level for lead dust on floors. EE&G recommended that room 104 be HEPA-vacuumed, washed, and rinsed with clean water. After the additional cleaning was completed dust samples were collected and sent to EMSL for analysis. Dust samples collected on July 31, 2012 after the additional cleaning reported concentration below laboratories detectable limits. No further action is required, based on these sampling results.

If you have any further questions of concerns regarding this matter, please do not hesitate to contact us at (305) 374-8300.

Submitted by

Hiram Aguiar
EPA Certified Lead Risk Assessor, EE&G

Reviewed by

Daniel J. Cottrell, Ph.D., P.G.
Senior Technical Advisor, EE&G
EPA Certified Lead Risk Assessor

Attachments: Laboratory Reports
Certificates

EMSL LABORATORY REPORT

LEAD IN DUST BY FLAME AAS (SW 846 3050B and 7420)

EMSL Analytical, Inc.
200 Route 130 North, Cinnaminson, NJ 08077
Phone/Fax: (856) 303-2500 / (856) 858-9551
http://www.emsl.com cinnaminsonleadlab@emsl.com

EMSL Order:	201206931
CustomerID:	EEG50
CustomerPO:	
ProjectID:	

Attn: **Hiram Aguiar**
EE & G
5751 Miami Lakes Drive East
Miami Lakes, FL 33014

Phone: (305) 374-8300
Fax:
Received: 07/18/12 10:03 AM
Collected: 7/16/2012

Project: **Glynn Archer School**

Test Report: Lead in Dust by Flame AAS (SW 846 3050B*/7000B)

Client Sample Description	Lab ID	Collected	Analyzed	Area Sampled	Lead Concentration
1	0001	7/16/2012	7/20/2012	144 in²	<10 µg/ft²
Site: Rm 100 Bldg A					
2	0002	7/16/2012	7/20/2012	144 in²	<10 µg/ft²
Site: Rm 103 Bldg A					
3	0003	7/16/2012	7/20/2012	144 in²	<10 µg/ft²
Site: Fl-1 Corr Bldg A					
4	0004	7/16/2012	7/20/2012	144 in²	<10 µg/ft²
Site: Auditorium Bldg A					
5	0005	7/16/2012	7/20/2012	144 in²	<10 µg/ft²
Site: WO-14 Bldg A					
6	0006	7/16/2012	7/20/2012	144 in²	<10 µg/ft²
Site: WO-17 Bldg A					
7	0007	7/16/2012	7/20/2012	144 in²	<10 µg/ft²
Site: Fl-1 Corr Bldg A					
8	0008	7/16/2012	7/20/2012	144 in²	<10 µg/ft²
Site: Rm 102 Bldg A					
9	0009	7/16/2012	7/20/2012	144 in²	<10 µg/ft²
Site: Rm 102 Wall Bldg A					
10	0010	7/16/2012	7/20/2012	144 in²	<10 µg/ft²
Site: Fl-1 Corr Wall Bldg A					
11	0011	7/16/2012	7/20/2012	144 in²	<10 µg/ft²
Site: Fl-2 Corr Bldg A					
12	0012	7/16/2012	7/20/2012	144 in²	<10 µg/ft²
Site: Rm 204 Bldg A					
13	0013	7/16/2012	7/20/2012	144 in²	<10 µg/ft²
Site: Rm 212 Bldg A					
14	0014	7/16/2012	7/20/2012	144 in²	<10 µg/ft²
Site: Rm 212 Bldg A					
15	0015	7/16/2012	7/20/2012	144 in²	<10 µg/ft²
Site: Rm 205 Bldg A					

Julie Smith - Laboratory Director
NJ-NELAP Accredited:04653
or other approved signatory

Reporting limit is 10 ug/wipe. ug/wipe = ug/ft2 x area sampled in ft2. Unless noted, results in this report are not blank corrected. This report relates only to the samples reported above and may not be reproduced, except in full, without written approval by EMSL. EMSL bears no responsibility for sample collection activities (such as volume sampled) or analytical method limitations. Samples received in good condition unless otherwise noted. QC data associated with this sample set is within acceptable limits, unless otherwise noted. The lab is not responsible for data reported in µg/ft² which is dependant on the area provided by non-lab personnel. The test results contained within this report meet the requirements of NELAC unless otherwise noted. * slight modifications to methods applied. "<" (less than) results signifies that the analyte was not detected at or above the reporting limit. Measurement of uncertainty is available upon request.

Samples analyzed by EMSL Analytical, Inc. Cinnaminson, NJ NELAP Certifications: NJ 03036, NY 10896, PA 68-00367, AIHA-LAP, LLC ELLAP 100194, A2LA 2845.01

Initial report from 07/21/2012 16:19:42

EMSL Analytical, Inc.
200 Route 130 North, Cinnaminson, NJ 08077
Phone/Fax: (856) 303-2500 / (856) 858-9551
http://www.emsl.com cinnaminsonleadlab@emsl.com

EMSL Order:	201206931
CustomerID:	EEG50
CustomerPO:	
ProjectID:	

Attn: **Hiram Aguiar**
EE & G
5751 Miami Lakes Drive East
Miami Lakes, FL 33014

Phone: (305) 374-8300
Fax:
Received: 07/18/12 10:03 AM
Collected: 7/16/2012

Project: **Glynn Archer School**

Test Report: Lead in Dust by Flame AAS (SW 846 3050B*/7000B)

Client Sample Description	Lab ID	Collected	Analyzed	Area Sampled	Lead Concentration
16	0016	7/16/2012	7/20/2012	144 in²	<10 µg/ft²
Site: Rm 205 Bldg A					
17	0017	7/16/2012	7/20/2012	144 in²	<10 µg/ft²
Site: Rm 205 Bldg A					
18	0018	7/16/2012	7/20/2012	144 in²	<10 µg/ft²
Site: Rm 203 Bldg A					
19	0019	7/16/2012	7/20/2012	144 in²	<10 µg/ft²
Site: Rm 104 Bldg B					
20	0020	7/16/2012	7/20/2012	144 in²	32 µg/ft²
Site: Rm 104 Wall Bldg B					
21	0021	7/16/2012	7/19/2012	144 in²	<10 µg/ft²
Site: Fl-1 Corr Bldg B					
22	0022	7/16/2012	7/19/2012	144 in²	<10 µg/ft²
Site: Rm 107 Bldg B					
23	0023	7/16/2012	7/19/2012	144 in²	22 µg/ft²
Site: Rm 109 Bldg B					
24	0024	7/16/2012	7/19/2012	144 in²	<10 µg/ft²
Site: Rm 105 Bldg B					
25	0025	7/16/2012	7/19/2012	144 in²	<10 µg/ft²
Site: Rm 105 Walll Bldg B					
26	0026	7/16/2012	7/19/2012	144 in²	<10 µg/ft²
Site: Rm 106 Bldg B					
27	0027	7/16/2012	7/19/2012	144 in²	<10 µg/ft²
Site: Rm 210 Bldg B					
28	0028	7/16/2012	7/19/2012	144 in²	<10 µg/ft²
Site: Rm 207 Bldg B					
29	0029	7/16/2012	7/19/2012	144 in²	<10 µg/ft²
Site: Rm 206 Bldg B					
30	0030	7/16/2012	7/19/2012	144 in²	<10 µg/ft²
Site: WA-06 Bldg B					

Julie Smith - Laboratory Director
NJ-NELAP Accredited:04653
or other approved signatory

Reporting limit is 10 ug/wipe. ug/wipe = ug/ft2 x area sampled in ft2. Unless noted, results in this report are not blank corrected. This report relates only to the samples reported above and may not be reproduced, except in full, without written approval by EMSL. EMSL bears no responsibility for sample collection activities (such as volume sampled) or analytical method limitations. Samples received in good condition unless otherwise noted. QC data associated with this sample set is within acceptable limits, unless otherwise noted. The lab is not responsible for data reported in µg/ft² which is dependant on the area provided by non-lab personnel. The test results contained within this report meet the requirements of NELAC unless otherwise noted. * slight modifications to methods applied. "<" (less than) results signifies that the analyte was not detected at or above the reporting limit. Measurement of uncertainty is available upon request.

Samples analyzed by EMSL Analytical, Inc. Cinnaminson, NJ NELAP Certifications: NJ 03036, NY 10896, PA 68-00367, AIHA-LAP, LLC ELLAP 100194, A2LA 2845.01

Initial report from 07/21/2012 16:19:42

201206931

EMSL ANALYTICAL, INC.
LABORATORY • PRODUCTS • TRAINING

Lead (Pb) Chain of Custody

EMSL Order ID *(Lab Use Only)*: 201206931

EMSL ANALYTICAL, INC.
200 ROUT 130 NORTH
CINNAMINSON, NJ 08077

Company : EE&G Environmental Services, LLC	**EMSL-Bill to:** ☒ Same ☐ Different If Bill to is Different note instructions in Comments** *Third Party Billing requires written authorization from third party*
Street: 5751 Miami Lakes Drive	
City: Miami Lakes / **State/Province: FL**	**Zip/Postal Code: 33014** / **Country: USA**
Report To (Name): Hiram Aguiar	**Fax #: 305-374-9004**
Telephone #: 305-374-8300	**Email Address: Haguiar@eeandg.com**
Project Name/Number: Glynn Archer School	
Please Provide Results: ☐ Fax ☒ Email / **Purchase Order:**	**U.S. State Samples Taken:**

Turnaround Time (TAT) Options* - Please Check

☐ 3 Hours | ☐ 6 Hours | ☐ 24 Hours | ☐ 48 Hours | ☐ 3 Days | ☒ 4 Days | ☐ 5 Days | ☐ 10 Days

**Analysis completed in accordance with EMSL's Terms and Conditions located in the Price Guide*

Matrix	Method	Instrument	Reporting Limit	Check
Chips ☐ mg/cm² ☐ % by wt.	SW846-7000B/7420 or AOAC 974.02	Flame Atomic Absorption	0.01%	☐
Air	NIOSH 7082	Flame Atomic Absorption	4 µg/filter	☐
	NIOSH 7105	Graphite Furnace AA	0.03 µg/filter	☐
	NIOSH 7300 modified	ICP-AES	0.5 µg/filter	☐
Wipe* ☒ ASTM ☐ non ASTM *if no box is checked, non-ASTM Wipe is assumed	SW846-7000B/7420	Flame Atomic Absorption	10 µg/wipe	☒
	SW846-6010B or C	ICP-AES	0.5 µg/wipe	☐
TCLP	SW846-1311/7420/SM 3111B	Flame Atomic Absorption	0.4 mg/L (ppm)	☐
	SW846-6010B or C	ICP-AES	0.1 mg/L (ppm)	☐
Soil	SW846-7420	Flame Atomic Absorption	40 mg/kg (ppm)	☐
	SW846-7421	Graphite Furnace AA	0.3 mg/kg (ppm)	☐
	SW86-6010B or C	ICP-AES	1 mg/kg (ppm)	☐
Wastewater	SM3111B or SW846-7000B/7420	Flame Atomic Absorption	0.4 mg/L (ppm)	☐
	EPA 200.9	Graphite Furnace AA	0.003 mg/L (ppm)	☐
	SW846-6010B or C	ICP-AES	1 mg/kg (ppm)	☐
Drinking Water	EPA 200.9	Graphite Furnace AA	0.003 mg/L (ppm)	☐

Other: / **Preservation Method (Water):**

Name of Sampler: Hiram Aguiar / **Signature of Sampler:**

	Sample #	Location	Volume/Area	Date/Time Sampled
1	1	RM 100 Bldg. A	12"x12" (1 SF)	7-16-12 1230
2	2	RM 103		1232
3	3	F1-1 Corr		1234
4	4	Auditorium		1235
5	5	WO -14		1237
6	6	WO -17		1240

Client Sample #'s 1 - / **Total # of Samples:**

Relinquished (Client):	Hiram Aguiar	**Date:**		**Time:**	
Received (Lab):	[signature]	**Date:**	7/18/12	**Time:**	1003 hr Rx

Comments:

2012 JUL 18 AM 10:03
CINNAMINSON
EMSL

Controlled Document --- Lead (Pb) COC – R1 – 3/18/2009

201206931

EMSL ANALYTICAL, INC.
LABORATORY • PRODUCTS • TRAINING

LEAD (Pb) CHAIN OF CUSTODY

EMSL ORDER ID *(Lab Use Only):* 201206931

EMSL ANALYTICAL, INC.
200 ROUT 130 NORTH
CINNAMINSON, NJ
08077
PHONE: (856) 858-4800
FAX: (856) 858-3899

Additional Pages of the Chain of Custody are only necessary if needed for additional sample information

	Sample #	Location	Volume/Area	Date/Time Sampled
-7	7	F1-1 Corr Bldg. A	12"x12" (1SF)	7-16-12 1244
-8	8	RM 102		1246
-9	9	RM 102 Wall		1248
-10	10	F1-1 Corr Wall		1252
-11	11	F1-2 Corr		1255
-12	12	RM 204		1259
-13	13	RM 212		1259
-14	14	RM 212		1300
-15	15	RM 205		1305
-16	16	RM 205		1306
-17	17	RM 205		1307
-18	18	RM 203		1310
-19	19	RM 104 Bldg B		1320
-20	20	RM 104 Wall		1321
-21	21	F1-1 Corr		1323
-22	22	RM 107		1325
-23	23	RM 109		1327
-24	24	RM 105		1330

Comments/Special Instructions:

Controlled Document --- Lead (Pb) COC – R1 – 3/18/2009

201206931

EMSL ANALYTICAL, INC.
LABORATORY • PRODUCTS • TRAINING

LEAD (Pb) CHAIN OF CUSTODY

EMSL ORDER ID *(Lab Use Only)*: 201206931

EMSL ANALYTICAL, INC.
200 ROUT 130 NORTH
CINNAMINSON, NJ
08077
PHONE: (856) 858-4800
FAX: (856) 858-3899

Additional Pages of the Chain of Custody are only necessary if needed for additional sample information

	Sample #	Location	Volume/Area	Date/Time Sampled
-25	25	RM105 Wall Bldg. B	12"x12" (1 SF)	7-16-12 1332
-26	26	RM106		1335
-27	27	RM210		1336
-28	28	RM207		1338
-29	29	RM206		1341
-30	30	WA-06		1345

Comments/Special Instructions:

2012 JUL 18 AM 10:05

Page ___3___ of ___3___ pages

EMSL Analytical, Inc.
200 Route 130 North, Cinnaminson, NJ 08077
Phone/Fax: (856) 303-2500 / (856) 858-9551
http://www.emsl.com cinnaminsonleadlab@emsl.com

EMSL Order:	201207282
CustomerID:	EEG50
CustomerPO:	
ProjectID:	

Attn: **Hiram Aguiar**
EE & G
5751 Miami Lakes Drive East
Miami Lakes, FL 33014

Phone: (305) 374-8300
Fax:
Received: 07/26/12 9:30 AM
Collected: 7/24/2012

Project: **Glynn Archer School**

Test Report: Lead in Dust by Flame AAS (SW 846 3050B*/7000B)

Client Sample Description	*Lab ID*	*Collected*	*Analyzed*	*Area Sampled*	*Lead Concentration*
1	*0001*	7/24/2012	7/26/2012	144 in²	<10 µg/ft²
Site: Bldg A W. Hall Fl 1					
2	*0002*	7/24/2012	7/26/2012	144 in²	<10 µg/ft²
Site: Bldg A N. Hall Fl 1					
3	*0003*	7/24/2012	7/26/2012	144 in²	<10 µg/ft²
Site: Bldg A S. Hall Fl 1					
4	*0004*	7/24/2012	7/26/2012	144 in²	<10 µg/ft²
Site: Bldg A S.E. Hall Fl 1					
5	*0005*	7/24/2012	7/26/2012	144 in²	<10 µg/ft²
Site: Bldg A Rm 100 Fl 1					
6	*0006*	7/24/2012	7/26/2012	144 in²	<10 µg/ft²
Site: Bldg A S.E. Hall Fl 2					
7	*0007*	7/24/2012	7/26/2012	144 in²	<10 µg/ft²
Site: Bldg A Rm 212 Fl 2					
8	*0008*	7/24/2012	7/26/2012	144 in²	<10 µg/ft²
Site: Bldg A Rm 212 Fl 2					
9	*0009*	7/24/2012	7/26/2012	144 in²	<10 µg/ft²
Site: Bldg A Rm 203 Fl 2					
10	*0010*	7/24/2012	7/26/2012	144 in²	<10 µg/ft²
Site: Bldg A Rm 205 Fl 2					
11	*0011*	7/24/2012	7/26/2012	144 in²	<10 µg/ft²
Site: Bldg A Rm 205 Fl 2					
12	*0012*	7/24/2012	7/26/2012	144 in²	<10 µg/ft²
Site: Bldg A Rm 205 Fl 2					
13	*0013*	7/24/2012	7/26/2012	144 in²	<10 µg/ft²
Site: Auditorium					
14	*0014*	7/24/2012	7/26/2012	144 in²	<10 µg/ft²
Site: Auditorium					
15	*0015*	7/24/2012	7/26/2012	144 in²	<10 µg/ft²
Site: Bldg B Rm 104 Fl 1					

Julie Smith - Laboratory Director
NJ-NELAP Accredited:04653
or other approved signatory

Reporting limit is 10 ug/wipe. ug/wipe = ug/ft2 x area sampled in ft2. Unless noted, results in this report are not blank corrected. This report relates only to the samples reported above and may not be reproduced, except in full, without written approval by EMSL. EMSL bears no responsibility for sample collection activities (such as volume sampled) or analytical method limitations. Samples received in good condition unless otherwise noted. QC data associated with this sample set is within acceptable limits, unless otherwise noted. The lab is not responsible for data reported in µg/ft² which is dependant on the area provided by non-lab personnel. The test results contained within this report meet the requirements of NELAC unless otherwise noted. * slight modifications to methods applied. "<" (less than) results signifies that the analyte was not detected at or above the reporting limit. Measurement of uncertainty is available upon request.

Samples analyzed by EMSL Analytical, Inc. Cinnaminson, NJ NELAP Certifications: NJ 03036, NY 10896, PA 68-00367, AIHA-LAP, LLC ELLAP 100194, A2LA 2845.01

Initial report from 07/27/2012 12:49:22

EMSL Analytical, Inc.
200 Route 130 North, Cinnaminson, NJ 08077
Phone/Fax: (856) 303-2500 / (856) 858-9551
http://www.emsl.com cinnaminsonleadlab@emsl.com

EMSL Order:	201207282
CustomerID:	EEG50
CustomerPO:	
ProjectID:	

Attn: **Hiram Aguiar**
EE & G
5751 Miami Lakes Drive East
Miami Lakes, FL 33014

Phone: (305) 374-8300
Fax:
Received: 07/26/12 9:30 AM
Collected: 7/24/2012

Project: **Glynn Archer School**

Test Report: Lead in Dust by Flame AAS (SW 846 3050B*/7000B)

Client Sample Description	*Lab ID*	*Collected*	*Analyzed*	*Area Sampled*	*Lead Concentration*
16	*0016*	7/24/2012	7/26/2012	144 in²	350 µg/ft²
Site: Bldg B Rm 104 Fl 1					
17	*0017*	7/24/2012	7/26/2012	144 in²	<10 µg/ft²
Site: Bldg B Rm 109 Fl 1					
18	*0018*	7/24/2012	7/26/2012	144 in²	<10 µg/ft²
Site: Bldg B Boys RRM Fl 1					
19	*0019*	7/24/2012	7/26/2012	144 in²	<10 µg/ft²
Site: Bldg B Boys RRM Fl 1					
20	*0020*	7/24/2012	7/26/2012	144 in²	<10 µg/ft²
Site: Bldg B Rm 105 Fl 1					
22	*0022*	7/24/2012	7/26/2012	144 in²	<10 µg/ft²
Site: Bldg B Rm 105 Fl 1					
23	*0023*	7/24/2012	7/26/2012	144 in²	22 µg/ft²
Site: Bldg B N.W. Hall Fl 1					
24	*0024*	7/24/2012	7/26/2012	144 in²	<10 µg/ft²
Site: Bldg B Rm 106 Fl 1					
25	*0025*	7/24/2012	7/26/2012	144 in²	<10 µg/ft²
Site: Bldg B E. Hall Fl 1					
26	*0026*	7/24/2012	7/26/2012	144 in²	<10 µg/ft²
Site: Bldg B Rm 107 Fl 1					
27	*0027*	7/24/2012	7/26/2012	144 in²	<10 µg/ft²
Site: Bldg B Rm 207 Fl 2					
28	*0028*	7/24/2012	7/26/2012	144 in²	<10 µg/ft²
Site: Bldg B Rm 210 Fl 2					
29	*0029*	7/24/2012	7/26/2012	144 in²	<10 µg/ft²
Site: Bldg B Rm 210 Fl 2					
30	*0030*	7/24/2012	7/26/2012	144 in²	<10 µg/ft²
Site: Bldg See Plan Fl 2					
31	*0031*	7/24/2012	7/26/2012	144 in²	<10 µg/ft²
Site: Bldg See Plan Fl 2					

Julie Smith - Laboratory Director
NJ-NELAP Accredited:04653
or other approved signatory

Reporting limit is 10 ug/wipe. ug/wipe = ug/ft2 x area sampled in ft2. Unless noted, results in this report are not blank corrected. This report relates only to the samples reported above and may not be reproduced, except in full, without written approval by EMSL. EMSL bears no responsibility for sample collection activities (such as volume sampled) or analytical method limitations. Samples received in good condition unless otherwise noted. QC data associated with this sample set is within acceptable limits, unless otherwise noted. The lab is not responsible for data reported in µg/ft² which is dependant on the area provided by non-lab personnel. The test results contained within this report meet the requirements of NELAC unless otherwise noted. * slight modifications to methods applied. "<" (less than) results signifies that the analyte was not detected at or above the reporting limit. Measurement of uncertainty is available upon request.

Samples analyzed by EMSL Analytical, Inc. Cinnaminson, NJ NELAP Certifications: NJ 03036, NY 10896, PA 68-00367, AIHA-LAP, LLC ELLAP 100194, A2LA 2845.01

Initial report from 07/27/2012 12:49:22

EMSL Analytical, Inc.
200 Route 130 North, Cinnaminson, NJ 08077
Phone/Fax: (856) 303-2500 / (856) 858-9551
http://www.emsl.com cinnaminsonleadlab@emsl.com

EMSL Order:	201207282
CustomerID:	EEG50
CustomerPO:	
ProjectID:	

Attn: **Hiram Aguiar**
EE & G
5751 Miami Lakes Drive East
Miami Lakes, FL 33014

Phone: (305) 374-8300
Fax:
Received: 07/26/12 9:30 AM
Collected: 7/24/2012

Project: **Glynn Archer School**

Test Report: Lead in Dust by Flame AAS (SW 846 3050B*/7000B)

Client Sample Description	*Lab ID*	*Collected*	*Analyzed*	*Area Sampled*	*Lead Concentration*
32	*0032*	7/24/2012	7/26/2012	144 in²	<10 µg/ft²
Site: Bldg See Plan Fl 2					
33	*0033*	7/24/2012	7/26/2012	144 in²	<10 µg/ft²
Site: Bldg Rm 206 Fl 2					
34	*0034*	7/24/2012	7/26/2012	144 in²	<10 µg/ft²
Site: Bldg Rm 206 Fl 2					

Julie Smith - Laboratory Director
NJ-NELAP Accredited:04653
or other approved signatory

Reporting limit is 10 ug/wipe. ug/wipe = ug/ft2 x area sampled in ft2. Unless noted, results in this report are not blank corrected. This report relates only to the samples reported above and may not be reproduced, except in full, without written approval by EMSL. EMSL bears no responsibility for sample collection activities (such as volume sampled) or analytical method limitations. Samples received in good condition unless otherwise noted. QC data associated with this sample set is within acceptable limits, unless otherwise noted. The lab is not responsible for data reported in µg/ft² which is dependant on the area provided by non-lab personnel. The test results contained within this report meet the requirements of NELAC unless otherwise noted. * slight modifications to methods applied. "<" (less than) results signifies that the analyte was not detected at or above the reporting limit. Measurement of uncertainty is available upon request.

Samples analyzed by EMSL Analytical, Inc. Cinnaminson, NJ NELAP Certifications: NJ 03036, NY 10896, PA 68-00367, AIHA-LAP, LLC ELLAP 100194, A2LA 2845.01

Initial report from 07/27/2012 12:49:22

201207282

EMSL ANALYTICAL, INC.
LABORATORY • PRODUCTS • TRAINING

Lead (Pb) Chain of Custody

EMSL Order ID *(Lab Use Only)*: 20120 7269

Company : City of Austin LeadSmart Program
Street: 1000 East 11th Street Ste. 200
City: Austin | State/Province: TX
Report To (Name): Coby Ramirez
Telephone #: 512-974-3122 Email Address: coby.ramirez@austintexas.gov
Project Name/Number: MA 7200NA120000127 -4519 South 2nd Street Austin TX, 78745 Project # 32
U.S. State Samples Taken: Texas

EMSL-Bill to: ☒ Same ☐ Different
If Bill to is Different note instructions in Comments**
Third Party Billing requires written authorization from third party
Zip/Postal Code: 78702 | Country: US
Telephone #: 512-974-3122
Fax #: 512-974-3152
Purchase Order: MA7200NA120000127
Please Provide Results: ☐ Fax ☒ Email
Connecticut Samples: ☐ Commercial ☐ Residential

Turnaround Time (TAT) Options* - Please Check

☐ 3 Hour | ☐ 6 Hour | ☒ 24 Hour | ☐ 48 Hour | ☐ 72 Hour | ☐ 96 Hour | ☐ 1 Week | ☐ 2 Week

**Analysis completed in accordance with EMSL's Terms and Conditions located in the Price Guide*

Matrix	Method	Instrument	Reporting Limit	Check
Chips ☐ % by wt. ☐ mg/cm² ☐ ppm	SW846-7000B/7420 or AOAC 974.02	Flame Atomic Absorption	0.01%	☐
Air	NIOSH 7082	Flame Atomic Absorption	4 µg/filter	☐
	NIOSH 7105	Graphite Furnace AA	0.03 µg/filter	☐
	NIOSH 7300 modified	ICP-AES	0.5 µg/filter	☐
Wipe* ☒ ASTM ☐ non ASTM *if no box is checked, non-ASTM Wipe is assumed	SW846-7000B/7420	Flame Atomic Absorption	10 µg/wipe	☒
	SW846-6010B or C	ICP-AES	0.5 µg/wipe	☐
TCLP	SW846-1311/7420/SM 3111B	Flame Atomic Absorption	0.4 mg/L (ppm)	☐
	SW846-6010B or C	ICP-AES	0.1 mg/L (ppm)	☐
Soil	SW846-7000B/7420	Flame Atomic Absorption	40 mg/kg (ppm)	☐
	SW846-7421	Graphite Furnace AA	0.3 mg/kg (ppm)	☐
	SW846-6010B or C	ICP-AES	1 mg/kg (ppm)	☐
Wastewater	SM3111B or SW846-7000B/7420	Flame Atomic Absorption	0.4 mg/L (ppm)	☐
	EPA 200.9	Graphite Furnace AA	0.003 mg/L (ppm)	☐
	SW846-6010B or C	ICP-AES	0.020 mg/L (ppm)	☐
Drinking Water	EPA 200.9	Graphite Furnace AA	0.003 mg/L (ppm)	☐

Other:
Preservation Method (Water):
Name of Sampler: Coby Ramirez
Signature of Sampler: Coby Ramirez

Sample #	Location	Volume/Area	Date/Time Sampled
#82	Dust Wipe Living Room floor entry	12x12	7/25/2012 / 10:30 am
#83	Dust Wipe Bathroom floor entry	12x12	7/25/2012 / 10:30 am
#84	Dust Wipe Bathroom floor	12x12	7/25/2012 / 10:30 am
#85	Dust Wipe Bedroom #3 Window Sill	18x2	7/25/2012 / 10:30 am
#86	Dust Wipe Bedroom #3 Window Sill	18x2	7/25/2012 / 10:30 am

Client Sample #'s #82 - #86 | Total # of Samples: 5

Relinquished (Client): Coby Ramirez | Date: 7/25/2012 | Time: 2:30 pm
Received (Lab): DY | Date: 7/26/12 | Time: 1230

* New COC sent via email from Coby Ramirez to reflect correct project address DY 7/26/12 1230

Comments: Please e-mail results to coby.ramirez@austintexas.gov
Account: CAHD25

EMSL Analytical, Inc.
200 Route 130 North, Cinnaminson, NJ 08077
Phone/Fax: (856) 303-2500 / (856) 858-9551
http://www.emsl.com cinnaminsonleadlab@emsl.com

EMSL Order:	201207495
CustomerID:	EEG50
CustomerPO:	
ProjectID:	

Attn: **Hiram Aguiar**
EE & G
5751 Miami Lakes Drive East
Miami Lakes, FL 33014

Phone: (305) 374-8300
Fax:
Received: 08/01/12 9:40 AM
Collected: 7/31/2012

Project: **Glynn Archer School**

Test Report: Lead in Dust by Flame AAS (SW 846 3050B*/7000B)

Client Sample Description	*Lab ID*	*Collected*	*Analyzed*	*Area Sampled*	*Lead Concentration*
1	*0001*	7/31/2012	8/1/2012	144 in²	<10 µg/ft²
	Site: Building B room 104				
2	*0002*	7/31/2012	8/1/2012	144 in²	<10 µg/ft²
	Site: Building B room 104				
3	*0003*	7/31/2012	8/1/2012	144 in²	<10 µg/ft²
	Site: Building B room 104				

Julie Smith - Laboratory Director
NJ-NELAP Accredited:04653
or other approved signatory

Reporting limit is 10 ug/wipe. ug/wipe = ug/ft2 x area sampled in ft2. Unless noted, results in this report are not blank corrected. This report relates only to the samples reported above and may not be reproduced, except in full, without written approval by EMSL. EMSL bears no responsibility for sample collection activities (such as volume sampled) or analytical method limitations. Samples received in good condition unless otherwise noted. QC data associated with this sample set is within acceptable limits, unless otherwise noted. The lab is not responsible for data reported in µg/ft² which is dependant on the area provided by non-lab personnel. The test results contained within this report meet the requirements of NELAC unless otherwise noted. * slight modifications to methods applied. "<" (less than) results signifies that the analyte was not detected at or above the reporting limit. Measurement of uncertainty is available upon request.

Samples analyzed by EMSL Analytical, Inc. Cinnaminson, NJ NELAP Certifications: NJ 03036, NY 10896, PA 68-00367, AIHA-LAP, LLC ELLAP 100194, A2LA 2845.01

Initial report from 08/01/2012 21:18:35

201207495

EMSL ANALYTICAL, INC.
LABORATORY • PRODUCTS • TRAINING

Lead (Pb) Chain of Custody

EMSL Order ID *(Lab Use Only)*: 201207495

EMSL ANALYTICAL, INC.
200 ROUT 130 NORTH
CINNAMINSON, NJ 08077

Company : EE&G Environmental Services, LLC		**EMSL-Bill to:** ☒ Same ☐ Different If Bill to is Different note instructions in Comments** *Third Party Billing requires written authorization from third party*	
Street: 5751 Miami Lakes Drive			
City: Miami Lakes	**State/Province: FL**	**Zip/Postal Code: 33014**	**Country: USA**
Report To (Name): Hiram Aguiar		**Fax #: 305-374-9004**	
Telephone #: 305-374-8300		**Email Address: Haguiar@eeandg.com**	
Project Name/Number: Glynn Archer School			
Please Provide Results: ☐ Fax ☒ Email	**Purchase Order:**	**U.S. State Samples Taken:**	

Turnaround Time (TAT) Options* - Please Check

☐ 3 Hours | ☐ 6 Hours | ☒ 24 Hours | ☐ 48 Hours | ☐ 3 Days | ☐ 4 Days | ☐ 5 Days | ☐ 10 Days

**Analysis completed in accordance with EMSL's Terms and Conditions located in the Price Guide*

Matrix	Method	Instrument	Reporting Limit	Check
Chips ☐ mg/cm² ☐ % by wt.	SW846-7000B/7420 or AOAC 974.02	Flame Atomic Absorption	0.01%	☐
Air	NIOSH 7082	Flame Atomic Absorption	4 µg/filter	☐
	NIOSH 7105	Graphite Furnace AA	0.03 µg/filter	☐
	NIOSH 7300 modified	ICP-AES	0.5 µg/filter	☐
Wipe* ☒ ASTM ☐ non ASTM *if no box is checked, non-ASTM Wipe is assumed	SW846-7000B/7420	Flame Atomic Absorption	10 µg/wipe	☒
	SW846-6010B or C	ICP-AES	0.5 µg/wipe	☐
TCLP	SW846-1311/7420/SM 3111B	Flame Atomic Absorption	0.4 mg/L (ppm)	☐
	SW846-6010B or C	ICP-AES	0.1 mg/L (ppm)	☐
Soil	SW846-7420	Flame Atomic Absorption	40 mg/kg (ppm)	☐
	SW846-7421	Graphite Furnace AA	0.3 mg/kg (ppm)	☐
	SW86-6010B or C	ICP-AES	1 mg/kg (ppm)	☐
Wastewater	SM3111B or SW846-7000B/7420	Flame Atomic Absorption	0.4 mg/L (ppm)	☐
	EPA 200.9	Graphite Furnace AA	0.003 mg/L (ppm)	☐
	SW846-6010B or C	ICP-AES	1 mg/kg (ppm)	☐
Drinking Water	EPA 200.9	Graphite Furnace AA	0.003 mg/L (ppm)	☐

Other: | **Preservation Method (Water):**

Name of Sampler: Hiram Aguiar | **Signature of Sampler:**

Sample #	Location	Volume/Area	Date/Time Sampled
1	Building B Room 104	12"x12" (1 SF)	7-31-12/1130
2	Building B Room 104	12"x12" (1 SF)	7-31-12/1130
3	Building B Room 104	12"x12" (1 SF)	7-31-12/1130
4			
5			
6			

Client Sample #'s 1 - 3 | **Total # of Samples:** 3

Relinquished (Client):	Hiram Aguiar	**Date:**	7-31-12	**Time:**	1730
Received (Lab): emily maggioncalda		**Date:**	8/1/12	**Time:**	9:40AM

Comments:

2012 AUG -1 AM 9:41 EMSL CINNAMINSON

Controlled Document --- Lead (Pb) COC – R1 – 3/18/2009

CERTIFICATES

United States Environmental Protection Agency

This is to certify that

Hiram Andres Aguiar

has fulfilled the requirements of the Toxic Substances Control Act (TSCA) Section 402, and has received certification to conduct lead-based paint activities pursuant to 40 CFR Part 745.226 as a:

Risk Assessor

In the Jurisdiction of:

Florida

This certification is valid from the date of issuance and expires August 1, 2014

FL-R-9781-1

Certification #

JUL 2 8 2011

Issued On

Jeaneanne M. Gettle, Chief

Pesticides and Toxic Substances Branch

United States Environmental Protection Agency

This is to certify that

Daniel Joseph Cottrell

has fulfilled the requirements of the Toxic Substances Control Act (TSCA) Section 402, and has received certification to conduct lead-based paint activities pursuant to 40 CFR Part 745.226 as a:

Risk Assessor

In the Jurisdiction of:

Florida

This certification is valid from the date of issuance and expires December 27, 2013

FL-R-10745-3

Certification #

FEB 2 - 2011

Issued On

Jeaneanne M. Gettle, Chief

Pesticides and Toxic Substances Branch

United States Environmental Protection Agency

This is to certify that

EE&G Environmental Services, LLC

has fulfilled the requirements of the Toxic Substances Control Act (TSCA) Section 402, and has received certification to conduct lead-based paint activities pursuant to 40 CFR Part 745.226

In the Jurisdiction of:

Florida

This certification is valid from the date of issuance and expires September 8, 2013

FL-10142-3

Certification #

SEP 2 2 2010

Issued On

Jeaneanne M. Gettle, Chief

Pesticides and Toxic Substances Branch

ENVIRONMENTAL SERVICES, LLC

LIMITED
LEAD-BASED PAINT INSPECTION REPORT

FOR

GLYNN R. ARCHER ELEMENTARY SCHOOL COMPLEX
CITY HALL PLANNING PROJECT
1302 WHITE STREET
KEY WEST, FLORIDA 33040

Prepared for

CH2M HILL
6410 5th STREET, SUITE 2A
KEY WEST, FLORIDA 33040

MR. ANDREW H. SMYTH

Prepared by

Hiram A. Aguiar
EPA Lead Risk Assessor Certificate #FL-R-9781-1

EE&G Environmental Services, LLC
5751 Miami Lakes Drive East
Miami, Florida 33014
(305) 374-8300
www.eeandg.com

August 17, 2012
EE&G Project No. 2012-2373

CONTENTS

Section **Page**

1.0 - INTRODUCTION....1

1.1 INTRODUCTION....1
1.2 OWNER INFORMATION....1
1.3 EDUCATIONAL MATERIALS....1

2.0 – BUILDING DESCRIPTION....2

3.0 - METHODS AND LIMITATIONS....3

3.1 XRF METHODS....3
3.2 LIMITATIONS....3

4.0 - INSPECTION FINDINGS....5

4.1 XRF TESTING RESULTS....5

5.0 - RECOMMENDATIONS....6

5.1 RECOMMENDATIONS FOR LEAD-BASED PAINT....6
5.2 RECOMMENDATIONS FOR OTHER PAINTS AND COATINGS....7
5.3 OSHA COMPLIANCE....7
5.4 DISCLOSURE OF LBP HAZARDS....8

6.0 - SIGNATURE PAGE....9

APPENDICES

APPENDIX A Renovate Right-Important Lead Hazard Information for Families, Child Care Providers, and Schools
APPENDIX B XRF Testing Data
APPENDIX C Figures
APPENDIX D Photographs

SECTION 1.0

INTRODUCTION

1.1 INTRODUCTION

At the request of the CH2M Hill (hereafter referred to as the Owner), EE&G Environmental Services, LLC (EE&G) conducted a limited Lead-Based Paint (LBP) inspection of buildings A, B, Auditorium, and C at Glynn Archer Elementary School located at 1302 White Street, Key West, Florida in June 2012 by Environmental Protection Agency (EPA) Lead-Based Paint Risk Assessor Hiram Aguiar of EE&G. EE&G's scope of work for this project consisted of evaluating the subject facility utilizing an X-Ray Fluorescence (XRF) instrument to assess for lead concentrations in selected painted building components.

1.2 OWNER INFORMATION

Not Available at the time of this inspection.

1.3 EDUCATIONAL MATERIALS

A copy of *Renovate Right: Important Lead Hazard Information for Families, Child Care Providers, and Schools* has been provided in Appendix A of this report. Federal law requires that individuals receive certain information before renovating more than two square feet of painted surfaces in housing, child care facilities and schools built before 1978.

- Homeowners and tenants: renovators must give you this pamphlet before starting work.
- Child-care facilities, including preschools and kindergarten classrooms, and the families of children under the age of six that attend those facilities: renovators must provide a copy of this pamphlet to child-care facilities and general renovation information to families whose children attend those facilities.

Federal law requires contractors that disturb lead-based paint in homes, child care facilities and schools built before 1978 to be certified and follow specific work practices to prevent lead contamination. Contractors must provide certification prior to renovations.

SECTION 2.0

BUILDING DESCRIPTION
GLYNN ARCHER ELEMENTARY SCHOOL

BUILDING A

The two-story classroom building, constructed in the 1920's, was observed to be constructed primarily of concrete, steel, and wood; interior walls were observed to be finished with plaster and drywall, ceilings were observed to be finished with laid-in ceiling tile, plaster and drywall. Floors were observed to be finished with vinyl floor tile, wood, and ceramic tile. County records were not available to review during the time of this inspection. See Appendix C for Figures.

BUILDING B

The two-story classroom building, constructed in the 1920's, was observed to be constructed primarily of concrete, steel, and wood; interior walls were observed to be finished with plaster and drywall, ceilings were observed to be finished with laid-in ceiling tile, plaster and drywall. Floors were observed to be finished with vinyl floor tile, wood, and ceramic tile. County records were not available to review during the time of this inspection. See Appendix C for Figures.

AUDITORIUM BUILDING

The one-story auditorium building, constructed in the 1920's, was observed to be constructed primarily of concrete, steel, and wood; interior walls were observed to be finished with plaster and drywall, ceilings were observed to be finished with laid-in ceiling tile, plaster and drywall. Floors were observed to be finished with linoleum and wood. County records were not available to review during the time of this inspection. See Appendix C for Figures.

BUILDING C

The one-story classroom building, constructed in the 1950's, was observed to be constructed primarily of concrete, steel, and wood; interior walls were observed to be finished with plaster and drywall, ceilings were observed to be finished with laid-in ceiling tile, plaster and drywall. Floors were observed to be finished with vinyl floor tile, wood, and ceramic tile. County records were not available to review during the time of this inspection. See Appendix C for Figures.

SECTION 3.0

METHODS AND LIMITATIONS

3.1 XRF METHODS

The limited inspection was performed based on a modified version of the protocol established in the "Guidelines for the Evaluation and Control of Lead-Based Paint Hazards in Housing" by the Department of Housing and Urban Development (HUD) in June 1995. A portable spectrum analyzing XRF instrument manufactured by Niton Corporation was utilized to perform a limited LBP inspection of accessible interior and exterior painted building components of buildings A, B, and Auditorium located at the subject property. The XRF serial number was 7510, and last date of calibration was July 11, 2011.

The XRF instrument performs a self-calibration test on startup. The calibration was then verified using a known standard from the United States Department of Commerce National Institute of Standards and Technology (NIST). QA/QC measurements were taken with the Level III (1.04 mg/cm^2) NIST standard at the beginning and end of the inspection. XRF test results expressed lead concentrations in milligram per square centimeter (mg/cm^2). The results were stored in the XRF for later retrieval in a spreadsheet format.

XRF testing locations, or testing combinations, were determined on site by an EPA Certified Lead-Based Paint Risk Assessor and the following factors; location (e.g. Building, Floor, Unit, Room), component (e.g. Wall, Ceiling, Door, Door Frame, Baseboard, etc.), substrate (e.g. Drywall, Concrete, Wood, Metal, etc.), and painting history (if available). An XRF reading was obtained from selected testing combinations.

3.2 LIMITATIONS

The limited inspection was conducted to assess selected painted building components for the presence of lead. Because of limitations in access this inspection can not be utilized as a Lead-Based Paint Inspection as defined in the HUD Guidelines, that is beyond the intent and scope of this limited inspection. The inspected areas are assumed to be representative of the materials used throughout the facility. This limited inspection report has been prepared by EE&G in a manner consistent with industry standards exercised by members of the profession practicing under similar conditions. No other warranty, expressed or implied is made. Under no circumstances is this limited inspection report to be utilized as a bid proposal or a project specification document, as this is not its intent. The intent of this inspection report is to assist the client in assessing for lead in selected painted building components.

EPA and HUD define lead-based paint (LBP) as; paint or other coatings that contain lead at or greater than the level of 1.0 mg/cm^2 or 0.5% by weight; however, the US Department of Labor's Occupational Safety and Health Administration (OSHA) lead regulation, 29 CFR 1926.62, does not recognize a concentration of lead in paint that may be safe for workers therefore, measurable amounts of lead are considered to be a potential source of exposure. This assessment can be utilized to identify building components that contain lead. However, as OSHA does not recognize the absence of lead through XRF, this assessment can not be utilized for establishing that coatings are lead-free for purposes of OSHA compliance.

EE&G's interpretations and recommendations are based upon the results of the XRF testing, environmental regulations, and quality control and assurance standards. The results, conclusions, and recommendations contained in this report pertain to conditions observed at the time of the inspection. Other conditions elsewhere at the subject facility may differ from those in the inspected locations and, such conditions are unknown, may change over time, and have not been considered.

This report was prepared solely for the use of EE&G's client, and is not intended for use by third party beneficiaries. The client shall indemnify and hold EE&G harmless against any liability for any loss arising out of or relating to reliance by any third party on any work performed there under, or the contents of this report. EE&G will not be held responsible for the interpretation or use by others of data developed pursuant to the compilation of this report, or for use of segregated portions of this report.

SECTION 4.0

INSPECTION FINDINGS

4.1 XRF TESTING RESULTS

HUD defines LBP as; paints or coatings with lead concentrations equal to or greater than 1.0 mg/cm^2 when measured by XRF. The following components were identified as LBP during this inspection:

BUIDLING A

DESCRIPTION: **Wall paint**
LOCATION: **Bathroom room 122, 124**
COLOR **Beige top layer**
XRF NUMBER: **Page #1, XRF #15-17, 25-28**
CONDITION: **Intact – Not intact**

DESCRIPTION: **Wall paint**
LOCATION: **Corridor floor 1**
COLOR **Blue & beige top layer**
XRF NUMBER: **Page #2, XRF #39-40, 43-45, 50-51**
CONDITION: **Intact**

DESCRIPTION: **Wall paint**
LOCATION: **Floor 1 stairwell**
COLOR **Beige top layer**
XRF NUMBER: **Page #3, XRF #86**
CONDITION: **Intact**

DESCRIPTION: **Wood trim paint**
LOCATION: **Class room 203**
COLOR **Blue top layer**
XRF NUMBER: **Page #4, XRF# 110**
CONDITION: **Not intact**

DESCRIPTION: **Wall paint**
LOCATION: **Class room 203**
COLOR **Beige top layer**
XRF NUMBER: **Page #4, XRF# 113-114**
CONDITION: **Intact**

DESCRIPTION: **Ceramic floor tile**
LOCATION: **Bathroom 212**
COLOR **White**
XRF NUMBER: **Page #5, XRF #146**
CONDITION: **Not intact**

BUIDLING A

DESCRIPTION: **Wall paint**
LOCATION: **Corridor out class room 120**
COLOR **Beige top layer**
XRF NUMBER: **Page #5, XRF# 156**
CONDITION: **Not intact**

DESCRIPTION: **Wall paint**
LOCATION: **Corridor out class room 120**
COLOR **Beige top layer**
XRF NUMBER: **Page #5, XRF# 156**
CONDITION: **Not intact**

DESCRIPTION: **Exterior wood door & door casing paint**
LOCATION: **Building A exterior**
COLOR **Green/blue top layer**
XRF NUMBER: **Page #16, XRF# 522-526, 530-531**
CONDITION: **Not intact**

DESCRIPTION: **Exterior metal stair-well paint**
LOCATION: **Building A exterior**
COLOR **Beige top layer**
XRF NUMBER: **Page #16 & 17, XRF# 532, 552**
CONDITION: **Not intact**

DESCRIPTION: **Exterior beam paint**
LOCATION: **Building A front of the school**
COLOR **White top layer**
XRF NUMBER: **Page #17, XRF# 548**
CONDITION: **Not intact**

DESCRIPTION: **Tiger statue**
LOCATION: **Building A front of the school**
COLOR **Orange top layer**
XRF NUMBER: **Page #17, XRF# 550**
CONDITION: **Not intact**

AUDITORIUM

DESCRIPTION: **Wall paint**
LOCATION: **Auditorium 117**
COLOR **Beige top layer**
XRF NUMBER: **Page #5 & 6, XRF# 162, 164-165, 174**
CONDITION: **Intact- Not intact**

DESCRIPTION: **Door paint**
LOCATION: **Auditorium 117**
COLOR **Pink top layer**
XRF NUMBER: **Page #6, XRF# 182-183**
CONDITION: **Intact- Not intact**

DESCRIPTION: **Door and door casing paint**
LOCATION: **Exterior doors of the Auditorium**
COLOR **Green top layer**
XRF NUMBER: **Page #15, XRF# 504-505**
CONDITION: **Not intact**

DESCRIPTION: **Exterior wall paint**
LOCATION: **Exterior wood shed attached to the Auditorium**
COLOR **Green top layer**
XRF NUMBER: **Page #15, XRF# 512**
CONDITION: **Poor condition**

DESCRIPTION: **Exterior wall paint**
LOCATION: **Exterior of Auditorium**
COLOR **Beige top layer**
XRF NUMBER: **Page #15, XRF# 510**
CONDITION: **Not intact**

BUILDING B

DESCRIPTION: **Door paint**
LOCATION: **Corridor floor 1**
COLOR **Blue top layer**
XRF NUMBER: **Page #6, XRF# 195**
CONDITION: **Intact- Not intact**

DESCRIPTION: **Wall paint**
LOCATION: **Corridor floor 1 & 2**
COLOR **Blue top layer**
XRF NUMBER: **Page #7, XRF# 205, 226**
CONDITION: **Intact- Not intact**

DESCRIPTION: **Door paint**
LOCATION: **Corridor floor 1**
COLOR **Blue top layer**
XRF NUMBER: **Page #7, XRF# 219-220**
CONDITION: **Intact- Not intact**

DESCRIPTION: **Wall paint**
LOCATION: **Corridor floor 2**
COLOR **Beige top layer**
XRF NUMBER: **Page #7, XRF# 227-228, 234**
CONDITION: **Intact- Not intact**

AUDITORIUM

DESCRIPTION: **Wall paint**
LOCATION: **Corridor floor 2**
COLOR **Blue top layer**
XRF NUMBER: **Page #8, XRF# 241**
CONDITION: **Not intact**

DESCRIPTION: **Wall paint**
LOCATION: **Class room 207**
COLOR **White top layer**
XRF NUMBER: **Page #8, XRF# 244**
CONDITION: **Not intact**

DESCRIPTION: **Trim paint**
LOCATION: **Class room 215**
COLOR **White top layer**
XRF NUMBER: **Page #8, XRF# 256-257**
CONDITION: **Not intact**

DESCRIPTION: **Ceramic baseboard**
LOCATION: **Bathroom 216**
COLOR **White top layer**
XRF NUMBER: **Page #8 & 9, XRF# 272-273**
CONDITION: **Not intact**

DESCRIPTION: **Wall paint**
LOCATION: **Class room 206**
COLOR **White top layer**
XRF NUMBER: **Page #9, XRF# 287-288**
CONDITION: **Intact-Not intact**

DESCRIPTION: **Wall paint**
LOCATION: **Boys bathroom floor 1**
COLOR **Beige top layer**
XRF NUMBER: **Page #11, XRF# 357**
CONDITION: **Not intact**

DESCRIPTION: **Ceramic baseboard**
LOCATION: **Boys bathroom floor 1**
COLOR **Beige top layer**
XRF NUMBER: **Page #11, XRF# 360**
CONDITION: **Not intact**

DESCRIPTION: **Wall paint**
LOCATION: **Class room 109B**
COLOR **Beige top layer**
XRF NUMBER: **Page #11, XRF# 368-370**
CONDITION: **Not intact**

AUDITORIUM

DESCRIPTION:	**Exterior wall paint**
LOCATION:	**Exterior of building B**
COLOR	**Beige top layer**
XRF NUMBER:	**Page #15, XRF# 492-493, 495**
CONDITION:	**Not intact**

BUILDING C

DESCRIPTION:	**Sink**
LOCATION:	**Boys bathroom floor 1**
COLOR	**White top layer**
XRF NUMBER:	**Page #12, XRF# 392-393**
CONDITION:	**Not intact**

DESCRIPTION:	**Exterior metal stair-well paint**
LOCATION:	**Building A**
COLOR	**Green/blue top layer**
XRF NUMBER:	**Page #17, XRF# 553**
CONDITION:	**Not intact**

Testing combinations and XRF results are presented in Appendix B pages 1-17.

SECTION 5.0

RECOMMENDATIONS

5.1 RECOMMENDATIONS FOR LEAD-BASED PAINT

If the structures are to be *renovated*:

Any LBP that has become damaged should be abated. Any abatement procedure in which LBP is disturbed should be conducted by trained personnel and in accordance with all federal, state and local regulations, including OSHA's lead regulation 29 CFR 1926.62. Also, prior to disposal, the entire waste stream from LBP abatement (paint, rags, protective suits, debris, etc.) must be characterized by a Toxic Characteristic Leachate Procedure (TCLP) test. The EPA requires TCLP testing to determine if the waste is considered hazardous.

To comply with OSHA lead regulation 29 CFR 1926.62, the laboratory analysis (Flame AAS, Method SW 846, 7420) results should be made available to any personnel that will conduct painting operations of these structures. This regulation considers paint that contains any amount of lead to be lead-based paint and mandates protective measures any time a painting or renovation project involves the disturbance of LBP components in such a way as to cause airborne emissions of lead particulate (sanding, scraping, grinding, etc.). These protective measures include: personnel protection (respirators, protective suits, etc.), engineering controls and personnel air monitoring until results of the personnel monitoring indicate airborne lead concentrations below the Permissible Exposure Limit (PEL) of fifty (50) micrograms per cubic meter as an eight-hour time-weighted average (TWA). In lieu of the above protective measures, painting personnel may provide objective historical data from previous similar projects to demonstrate that the PEL for lead will not be exceeded.

If any of the structures are to be *demolished*:

Prior to demolition, a waste stream characterization should be performed on the structure. This waste stream must be characterized by a Toxic Characteristic Leachate Procedure (TCLP) test. The EPA requires TCLP testing to determine if the waste is considered either hazardous (and must be disposed of in a special disposal site) or is nonhazardous, and may be disposed of in a standard landfill. For some materials such as steel and mostly metal components, recycling at a certified recycling facility is another alternative to including these components as a representative fraction of the waste stream characterization. Finally, baseline representative soil samples should be collected from each address/lot on the properties to establish a background “Lead-in Soil” concentration for future post-demolition comparison.

During demolition and disposal operations:

To comply with OSHA lead regulation 29 CFR 1926.62, the paint chip laboratory analysis (Flame AAS, Method SW 846, 7420) results should be made available to any personnel that will conduct demolition operations of this structure. This regulation considers paint that contains any amount of lead to be lead-based paint and mandates protective measures any time a demolition project involves the disturbance of LBP components in such a way as to cause airborne emissions of lead particulate (torching, disc sanding, etc.). These protective measures include:

personnel protection (respirators, protective suits, etc.), engineering controls and personnel air monitoring until results of the personnel monitoring indicate airborne lead concentrations below the Permissible Exposure Limit (PEL) of fifty (50) micrograms per cubic meter as an eight-hour time-weighted average (TWA). In lieu of the above protective measures, demolition personnel may provide objective historical data from previous similar projects to demonstrate that the PEL for lead will not be exceeded.

After demolition, razing, and disposal operations:

At completion of demolition/razing/disposal of the structure down to grade, final representative soil samples should be collected from each address/lot to determine a final background "Lead - in Soil" concentration that should be below EPA/HUD and/or Florida DEP guidelines for Affordable Housing. If levels exceed EPA/HUD and/or Florida DEP guidelines, some soil remediation may be required to eliminate contaminated soil. Additional round(s) of confirmatory testing will then be required to clear this area.

If the structures are to remain "as is" and occupied:

An initial risk assessment should be conducted of the LBP. The risk assessment entails the collection of dust samples from areas adjacent to the LBP components. The dust sample is sent to a laboratory for analysis of lead-content. The dust's lead content provides an indication of the potential exposure to persons that come in contact with dust associated with the LBP components. The collection of dust samples for risk assessment purposes should be performed pursuant to Part III, Section III of the EPA/HUD Lead-Based Paint Risk Assessment Protocol. This protocol was established to evaluate the risk in community buildings where lead-based paint is present.

The owner should adopt an in-place management program for all LBP that is not removed from the structures. Periodic surveillance should be included in the in-place management program. As part of the in-place management program, The owner may also elect to conduct periodic risk assessments (dust sampling) of the remaining LBP. Periodic surveillance should be conducted at least every six months noting any change in the condition of the LBP.

5.2 RECOMMENDATIONS FOR OTHER PAINTS AND COATINGS

OSHA does not recognize the absence of lead through XRF; therefore, these materials must be considered to be lead-containing and a potential source of exposure unless determined to be nonlead-containing through laboratory analysis (i.e. Flame AAS, Method SW 846, 7420).

Any activity that would release lead dust or fumes must be performed by workers in accordance with the OSHA standard for removal of lead containing paint. If these materials can remain intact during renovation or demolition, then no other special handling is required.

5.3 OSHA COMPLIANCE

To comply with OSHA lead regulation 29 CFR 1926.62, this report should be made available to personnel that will conduct painting operations at this facility. This regulation considers coatings that contain measurable amounts of lead to be lead-based paint and mandates protective measures when a painting or demolition project involves the disturbance of painted components

in such a way as to cause airborne emissions of lead particulate (sanding, scraping, grinding, etc.). These protective measures include: hazard communication training, personnel protection (respirators, protective suits, etc.), engineering controls and personnel air monitoring until results of the personnel monitoring indicate airborne lead concentrations below the Action Level (AL) of 30 micrograms per cubic meter as an eight-hour time-weighted average (TWA). In lieu of the above protective measures, painting and or demolition personnel may provide objective historical data from previous similar projects to demonstrate that the AL for lead will not be exceeded.

5.4 DISCLOSURE OF LBP HAZARDS

The Residential Lead-Based Paint Hazard Reduction Act of 1992, also known as Title X, Section 1018 requires the disclosure to the purchaser or lessee of any known information on lead-based paint or lead-based paint hazards and provide to the purchaser or lessee any lead hazard evaluation reports available prior to the sale or lease of most housing built prior to 1978.

SECTION 6.0

SIGNATURE PAGE

Submitted by

Hiram Aguiar
Senior Staff Professional, EE&G
EPA Lead-Based Paint Risk Assessor

Reviewed by

Daniel J. Cottrell, Ph.D., P.G.
Senior Technical Advisor, EE&G
EPA Lead-Based Paint Risk Assessor

APPENDIX A

RENOVATE RIGHT
EPA PAMPHLET

Renovate Right

Important Lead Hazard Information for Families, Child Care Providers and Schools

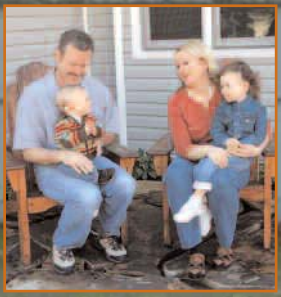

UNITED STATES ENVIRONMENTAL PROTECTION AGENCY

U.S. DEPARTMENT OF HOUSING AND URBAN DEVELOPMENT

It's the Law!

Federal law requires that individuals receive certain information before renovating more than two square feet of painted surfaces in housing, child care facilities and schools built before 1978.

- Homeowners and tenants: renovators must give you this pamphlet before starting work.
- Child care facilities, including preschools and kindergarten classrooms, and the families of children under the age of six that attend those facilities: renovators must provide a copy of this pamphlet to child-care facilities and general renovation information to families whose children attend those facilities.

Also, beginning April 2010, federal law will require contractors that disturb lead-based paint in homes, child care facilities and schools, built before 1978 to be certified and follow specific work practices to prevent lead contamination. Therefore beginning in April 2010, ask to see your contractor's certification.

Renovating, Repairing, or Painting?

- Is your home, your building, or the child care facility or school your children attend, being renovated, repaired, or painted?
- Was your home, your building, or the child care facility or school your children under age 6 attend, built before 1978?

If the answer to these questions is YES, there are a few important things you need to know about lead-based paint.

This pamphlet provides basic facts about lead and information about lead safety when work is being done in your home, your building or the childcare facility or school your children attend.

The Facts About Lead

- Lead can affect children's brains and developing nervous systems, causing reduced IQ, learning disabilities, and behavioral problems. Lead is also harmful to adults.
- Lead in dust is the most common way people are exposed to lead. People can also get lead in their bodies from lead in soil or paint chips. Lead dust is often invisible.
- Lead-based paint was used in more than 38 million homes until it was banned for residential use in 1978.
- Projects that disturb lead-based paint can create dust and endanger you and your family. Don't let this happen to you. Follow the practices described in this pamphlet to protect you and your family.

Who Should Read This Pamphlet?

This pamphlet is for you if you:

- Reside in a home built before 1978,
- Own or operate a child care facility, including preschools and kindergarten classrooms, built before 1978, or
- Have a child under six who attends a child care facility built before 1978.

You will learn:

- Basic facts about lead and your health,
- How to choose a contractor, if you are a property owner,
- What tenants, and parents/guardians of a child in a child care facility or school should consider,
- How to prepare for the renovation or repair job,
- What to look for during the job and after the job is done,
- Where to get more information about lead.

This pamphlet is not for:

- **Abatement projects.** Abatement is a set of activities aimed specifically at eliminating lead or lead hazards. EPA has regulations for certification and training of abatement professionals. If your goal is to eliminate lead or lead hazards, contact the National Lead Information Center at **1-800-424-LEAD (5323)** for more information.
- **"Do-it-yourself" projects.** If you plan to do renovation work yourself, this document is a good start, but you will need more information to complete the work safely. Call the National Lead Information Center at **1-800-424-LEAD (5323)** and ask for more information on how to work safely in a home with lead-based paint.
- **Contractor education.** Contractors who want information about working safely with lead should contact the National Lead Information Center at **1-800-424-LEAD (5323)** for information about courses and resources on lead-safe work practices.

Lead and Your Health

Lead is especially dangerous to children under six years of age.

Lead can affect children's brains and developing nervous systems, causing:

- Reduced IQ and learning disabilities.
- Behavior problems.

Even children who appear healthy can have dangerous levels of lead in their bodies.

Lead is also harmful to adults. In adults, low levels of lead can pose many dangers, including:

- High blood pressure and hypertension.
- Pregnant women exposed to lead can transfer lead to their fetus.

Lead gets into the body when it is swallowed or inhaled.

- People, especially children, can swallow lead dust as they eat, play, and do other normal hand-to-mouth activities.
- People may also breathe in lead dust or fumes if they disturb lead-based paint. People who sand, scrape, burn, brush or blast or otherwise disturb lead-based paint risk unsafe exposure to lead.

What should I do if I am concerned about my family's exposure to lead?

- Call your local health department for advice on reducing and eliminating exposures to lead inside and outside your home, child care facility or school.
- Always use lead-safe work practices when renovation or repair will disturb lead-based paint.
- A blood test is the only way to find out if you or a family member already has lead poisoning. Call your doctor or local health department to arrange for a blood test.

For more information about the health effects of exposure to lead, visit the EPA lead website at www.epa.gov/lead/pubs/leadinfo.htm or call 1-800-424-LEAD (5323).

There are other things you can do to protect your family everyday.

- Regularly clean floors, window sills, and other surfaces.
- Wash children's hands, bottles, pacifiers, and toys often.
- Make sure children eat a healthy, nutritious diet consistent with the USDA's dietary guidelines, that helps protect children from the effects of lead.
- Wipe off shoes before entering house.

Where Does the Lead Come From?

Dust is the main problem. The most common way to get lead in the body is from dust. Lead dust comes from deteriorating lead-based paint and lead-contaminated soil that gets tracked into your home. This dust may accumulate to unsafe levels. Then, normal hand to-mouth activities, like playing and eating (especially in young children), move that dust from surfaces like floors and windowsills into the body.

Home renovation creates dust. Common renovation activities like sanding, cutting, and demolition can create hazardous lead dust and chips.

Proper work practices protect you from the dust. The key to protecting yourself and your family during a renovation, repair or painting job is to use lead-safe work practices such as containing dust inside the work area, using dust-minimizing work methods, and conducting a careful cleanup, as described in this pamphlet.

Other sources of lead. Remember, lead can also come from outside soil, your water, or household items (such as lead-glazed pottery and lead crystal). Contact the National Lead Information Center at **1-800-424-LEAD (5323)** for more information on these sources.

Checking Your Home for Lead-Based Paint

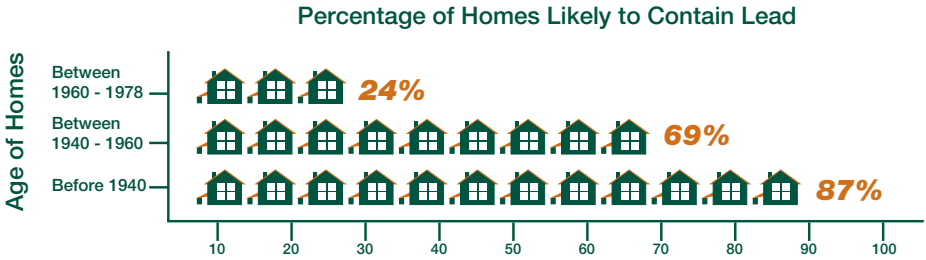

Older homes, child care facilities, and schools are more likely to contain lead-based paint. Homes may be single-family homes or apartments. They may be private, government-assisted, or public housing. Schools are preschools and kindergarten classrooms. They may be urban, suburban, or rural.

You have the following options:

You may decide to assume your home, child care facility, or school contains lead. Especially in older homes and buildings, you may simply want to assume lead-based paint is present and follow the lead-safe work practices described in this brochure during the renovation, repair, or painting job.

You or your contractor may also test for lead using a lead test kit. Test kits must be EPA-approved and are available at hardware stores. They include detailed instructions for their use.

You can hire a certified professional to check for lead-based paint. These professionals are certified risk assessors or inspectors, and can determine if your home has lead or lead hazards.

- A certified inspector or risk assessor can conduct an inspection telling you whether your home, or a portion of your home, has lead-based paint and where it is located. This will tell you the areas in your home where lead-safe work practices are needed.
- A certified risk assessor can conduct a risk assessment telling you if your home currently has any lead hazards from lead in paint, dust, or soil. The risk assessor can also tell you what actions to take to address any hazards.
- For help finding a certified risk assessor or inspector, call the National Lead Information Center at **1-800-424-LEAD (5323).**

For Property Owners

You have the ultimate responsibility for the safety of your family, tenants, or children in your care. This means properly preparing for the renovation and keeping persons out of the work area (see p. 8). It also means ensuring the contractor uses lead-safe work practices.

Beginning April 2010, federal law will require that contractors performing renovation, repair and painting projects that disturb lead-based paint in homes, child care facilities, and schools built before 1978 to be certified and follow specific work practices to prevent lead contamination.

Until contractors are required to be certified, make sure your contractor can explain clearly the details of the job and how the contractor will minimize lead hazards during the work.

- Ask if the contractor is trained to perform lead-safe work practices and to see a copy of their training certificate.
- Ask them what lead-safe methods they will use to set up and perform the job in your home, child care facility or school.
- Ask if the contractor is aware of the lead renovation rules. For example, contractors are required to provide you with a copy of this pamphlet before beginning work. A sample pre-renovation disclosure form is provided at the back of this pamphlet. Contractors may use this form to make documentation of compliance easier.
- Ask for references from at least three recent jobs involving homes built before 1978, and speak to each personally.

Always make sure the contract is clear about how the work will be set up, performed, and cleaned.

- Share the results of any previous lead tests with the contractor.
- Even before contractors are required to be certified you should specify in the contract that they follow the work practices described on pages 9 and 10 of this brochure.
- The contract should specify which parts of your home are part of the work area and specify which lead-safe work practices should be used in those areas. Remember, your contractor should confine dust and debris to the work area and should minimize spreading that dust to other areas of the home.
- The contract should also specify that the contractor clean the work area, verify that it was cleaned adequately, and re-clean it if necessary.

Once these practices are required, if you think a worker is failing to do what they are supposed to do or is doing something that is unsafe, you should:

- Direct the contractor to comply with the contract requirements,
- Call your local health or building department, or
- Call EPA's hotline **1-800-424-LEAD (5323).**

For Tenants, and Families of Children Under Age Six in Child Care Facilities and Schools

You play an important role ensuring the ultimate safety of your family.

This means properly preparing for the renovation and staying out of the work area (see p. 8).

Beginning April 2010, federal law will require that contractors performing renovation, repair and painting projects that disturb lead-based paint in homes, child care facilities and schools built before 1978 that a child under age six visits regularly to be certified and follow specific work practices to prevent lead contamination.

The law will require anyone hired to renovate, repair, or do painting preparation work on a property built before 1978 to follow the steps described on pages 9 and 10 unless the area where the work will be done contains no lead-based paint.

Once these practices are required, if you think a worker is failing to do what they are supposed to do or is doing something that is unsafe, you should:

- Contact your landlord,
- Call your local health or building department, or
- Call EPA's hotline **1-800-424-LEAD (5323).**

If you are concerned about lead hazards left behind after the job is over, you can check the work yourself (see page 10).

If your property receives housing assistance from HUD (or a state or local agency that uses HUD funds), you must follow the more stringent requirements of HUD's Lead-safe Housing Rule and the ones described in this pamphlet.

Preparing for a Renovation

The work areas should not be accessible to occupants while the work occurs. The rooms or areas where work is being done may be blocked off or sealed with plastic sheeting to contain any dust that is generated. The contained area will not be available to you until the work in that room or area is complete, cleaned thoroughly, and the containment has been removed. You will not have access to some areas and should plan accordingly.

You may need:

- Alternative bedroom, bathroom, and kitchen arrangements if work is occurring in those areas of your home.
- A safe place for pets because they, too, can be poisoned by lead and can track lead dust into other areas of the home.
- A separate pathway for the contractor from the work area to the outside, in order to bring materials in and out of the home. Ideally, it should not be through the same entrance that your family uses.
- A place to store your furniture. All furniture and belongings may have to be moved from the work area while the work is done. Items that can't be moved, such as cabinets, should be wrapped in heavy duty plastic.
- To turn off forced-air heating and air conditioning systems while work is done. This prevents dust from spreading through vents from the work area to the rest of your home. Consider how this may affect your living arrangements.

You may even want to move out of your home temporarily while all or parts of the work are being done.

Child care facilities and schools may want to consider alternative accommodations for children and access to necessary facilities.

During the Work

Beginning April 2010, federal law will require contractors that are hired to perform renovation, repair and painting projects in homes, child care facilities, and schools built before 1978 that disturb lead-based paint to be certified and follow specific work practices to prevent lead contamination.

Even before contractors are required to be certified and follow specific work practices, the contractor should follow these three simple procedures, described below:

1. **Contain the work area.** The area should be contained so that dust and debris do not escape from that area. Warning signs should be put up and heavy-duty plastic and tape should be used as appropriate to:
   - Cover the floors and any furniture that cannot be moved.
   - Seal off doors and heating and cooling system vents.

These will help prevent dust or debris from getting outside the work area.

2. **Minimize dust.** There is no way to eliminate dust, but some methods make less dust than others. For example, using water to mist areas before sanding or scraping; scoring paint before separating components; and prying and pulling apart components instead of breaking them are techniques that generate less dust than alternatives. Some methods generate large amounts of lead-contaminated dust and should not be used. They are:
   - Open flame burning or torching.
   - Sanding, grinding, planing, needle gunning, or blasting with power tools and equipment not equipped with a shroud and HEPA vacuum attachment.
   - Using a heat gun at temperatures greater than 1100°F.
3. **Clean up thoroughly.** The work area should be cleaned up daily to keep it as clean as possible. When all the work is done, the area should be cleaned up using special cleaning methods before taking down any plastic that isolates the work area from the rest of the home. The special cleaning methods should include:
   - Using a HEPA vacuum to clean up dust and debris on all surfaces, followed by
   - Wet mopping with plenty of rinse water.

When the final cleaning is done, look around. There should be no dust, paint chips, or debris in the work area. If you see any dust, paint chips, or debris, the area should be re-cleaned.

For Property Owners: After the Work is Done

When all the work is finished, you will want to know if your home, child care facility, or school has been cleaned up properly. Here are some ways to check.

Even before contractors are required to be certified and follow specific work practices, you should:

Ask about your contractor's final cleanup check. Remember, lead dust is often invisible to the naked eye. It may still be present even if you cannot see it. The contractor should use disposable cleaning cloths to wipe the floor of the work area and compare them to a cleaning verification card to determine if the work area was adequately cleaned.

To order a cleaning verification card and detailed instructions visit the EPA lead website at **www.epa.gov/lead** or contact the National Lead Information Center at **1-800-424-LEAD (5323)** or visit their website at **www.epa.gov/lead/nlic.htm.**

You also may choose to have a lead-dust test. Lead-dust tests are wipe samples sent to a laboratory for analysis.

- You can specify in your contract that a lead-dust test will be done. In this case, make it clear who will do the testing.
- Testing should be done by a lead professional.

If you choose to do the testing, some EPA-recognized lead laboratories will send you a kit that allows you to collect samples and send them back to the lab for analysis.

Contact the National Lead Information Center at **1-800-424-LEAD (5323)** for lists of qualified professionals and EPA-recognized lead labs.

If your home, child care facility, or school fails the dust test, the area should be re-cleaned and tested again.

Where the project is done by contract, it is a good idea to specify in the contract that the contractor is responsible for re-cleaning if the home, child care facility, or school fails the test.

For Additional Information

You may need additional information on how to protect yourself and your children while a job is going on in your home, your building, or childcare facility.

- The **National Lead Information Center** at **1-800-424-LEAD (5323)** or **www.epa.gov/lead/nlic.htm** can tell you how to contact your state, local, and/or tribal programs or get general information about lead poisoning prevention.

  - State and tribal lead poisoning prevention or environmental protection programs can provide information about lead regulations and potential sources of financial aid for reducing lead hazards. If your State or local government has requirements more stringent than those described in this pamphlet, you must follow those requirements.
  - Local building code officials can tell you the regulations that apply to the renovation work that you are planning.
  - State, county, and local health departments can provide information about local programs, including assistance for lead-poisoned children and advice on ways to get your home checked for lead.

- The **National Lead Information Center** can also provide a variety of resource materials, including the following guides to lead-safe work practices. Many of these materials are also available at **www.epa.gov/lead/pubs/brochure.htm.**
  - Lead Paint Safety, a Field Guide for Painting, Home Maintenance, and Renovation Work
  - Reducing Lead Hazards When Remodeling Your Home
  - Protect Your Family from Lead in Your Home
  - Lead in Your Home: A Parent's Reference Guide

For the hearing impaired, call the Federal Information Relay Service at 1-800-877-8339 to access any of the phone numbers in this brochure.

EPA Contacts

EPA Regional Offices

EPA addresses residential lead hazards through several different regulations. EPA requires training and certification for conducting abatement, education about hazards associated with renovations, disclosure about known lead paint and lead hazards in housing, and sets lead-paint hazard standards.

Your Regional EPA Office can provide further information regarding lead safety and lead protection programs at **www.epa.gov/lead.**

Region 1
(Connecticut, Massachusetts, Maine, New Hampshire, Rhode Island, Vermont)
Regional Lead Contact
U.S. EPA Region 1
Suite 1100
One Congress Street
Boston, MA 02114-2023
(888) 372-7341

Region 2
(New Jersey, New York, Puerto Rico, Virgin Islands)
Regional Lead Contact
U.S. EPA Region 2
2890 Woodbridge Avenue
Building 209, Mail Stop 225
Edison, NJ 08837-3679
(732) 321-6769

Region 3
(Delaware, Maryland, Pennsylvania, Virginia, Washington, DC, West Virginia)
Regional Lead Contact
U.S. EPA Region 3
1650 Arch Street
Philadelphia, PA
19103-2029
(215) 814-5000

Region 4
(Alabama, Florida, Georgia, Kentucky, Mississippi, North Carolina, South Carolina, Tennessee)
Regional Lead Contact
U.S. EPA Region 4
61 Forsyth Street, SW
Atlanta, GA 30303-8960
(404) 562-9900

Region 5
(Illinois, Indiana, Michigan, Minnesota, Ohio, Wisconsin)
Regional Lead Contact
U.S. EPA Region 5
77 West Jackson Boulevard
Chicago, IL 60604-3507
(312) 886-6003

Region 6
(Arkansas, Louisiana, New Mexico, Oklahoma, Texas)
Regional Lead Contact
U.S. EPA Region 6
1445 Ross Avenue,
12th Floor
Dallas, TX 75202-2733
(214) 665-6444

Region 7
(Iowa, Kansas, Missouri, Nebraska)
Regional Lead Contact
U.S. EPA Region 7
901 N. 5th Street
Kansas City, KS 66101
(913) 551-7003

Region 8
(Colorado, Montana, North Dakota, South Dakota, Utah, Wyoming)
Regional Lead Contact
U.S. EPA Region 8
999 18th Street, Suite 300
Denver, CO 80202-2466
(303) 312-6312

Region 9
(Arizona, California, Hawaii, Nevada)
Regional Lead Contact
U.S. Region 9
75 Hawthorne Street
San Francisco, CA 94105
(415) 947-8021

Region 10
(Alaska, Idaho, Oregon, Washington)
Regional Lead Contact
U.S. EPA Region 10
1200 Sixth Avenue
Seattle, WA 98101-1128
(206) 553-1200

Other Federal Agencies

CPSC

The Consumer Product Safety Commission (CPSC) protects the public from the unreasonable risk of injury or death from 15,000 types of consumer products under the agency's jurisdiction. CPSC warns the public and private sectors to reduce exposure to lead and increase consumer awareness. Contact CPSC for further information regarding regulations and consumer product safety.

CPSC
4330 East West Highway
Bethesda, MD 20814
Hotline 1-(800) 638-2772
www.cpsc.gov

CDC Childhood Lead Poisoning Prevention Branch

The Centers for Disease Control and Prevention (CDC) assists state and local childhood lead poisoning prevention programs to provide a scientific basis for policy decisions, and to ensure that health issues are addressed in decisions about housing and the environment. Contact CDC Childhood Lead Poisoning Prevention Program for additional materials and links on the topic of lead.

CDC Childhood Lead Poisoning Prevention Branch
4770 Buford Highway, MS F-40
Atlanta, GA 30341
(770) 488-3300
www.cdc.gov/nceh/lead

HUD Office of Healthy Homes and Lead Hazard Control

The Department of Housing and Urban Development (HUD) provides funds to state and local governments to develop cost-effective ways to reduce lead-based paint hazards in America's privately-owned low-income housing. In addition, the office enforces the rule on disclosure of known lead paint and lead hazards in housing, and HUD's lead safety regulations in HUD-assisted housing, provides public outreach and technical assistance, and conducts technical studies to help protect children and their families from health and safety hazards in the home. Contact the HUD Office of Healthy Homes and Lead Hazard Control for information on lead regulations, outreach efforts, and lead hazard control research and outreach grant programs.

U.S. Department of Housing and Urban Development
Office of Healthy Homes
and Lead Hazard Control
451 Seventh Street, SW, Room 8236
Washington, DC 20410-3000
HUD's Lead Regulations Hotline
(202) 402-7698
www.hud.gov/offices/lead/

UNITED STATES ENVIRONMENTAL PROTECTION AGENCY

Current Sample Pre-Renovation Form

Effective until April 2010.

Confirmation of Receipt of Lead Pamphlet

❑ I have received a copy of the pamphlet, *Renovate Right: Important Lead Hazard Information for Families, Child Care Providers and Schools* informing me of the potential risk of the lead hazard exposure from renovation activity to be performed in my dwelling unit. I received this pamphlet before the work began.

Printed name of recipient

Date

Signature of recipient

Self-Certification Option (for tenant-occupied dwellings only) —
If the lead pamphlet was delivered but a tenant signature was not obtainable, you may check the appropriate box below.

❑ **Refusal to sign** — I certify that I have made a good faith effort to deliver the pamphlet, *Renovate Right: Important Lead Hazard Information for Families, Child Care Providers and Schools*, to the rental dwelling unit listed below at the date and time indicated and that the occupant refused to sign the confirmation of receipt. I further certify that I have left a copy of the pamphlet at the unit with the occupant.

❑ **Unavailable for signature** — I certify that I have made a good faith effort to deliver the pamphlet, *Renovate Right: Important Lead Hazard Information for Families, Child Care providers and Schools*, to the rental dwelling unit listed below and that the occupant was unavailable to sign the confirmation of receipt. I further certify that I have left a copy of the pamphlet at the unit by sliding it under the door.

Printed name of person certifying

Attempted delivery
date and time
lead pamphlet delivery

Signature of person certifying lead pamphlet delivery

Unit Address

Note Regarding Mailing Option — As an alternative to delivery in person, you may mail the lead pamphlet to the owner and/or tenant. Pamphlet must be mailed at least 7 days before renovation (Document with a certificate of mailing from the post office).

UNITED STATES ENVIRONMENTAL PROTECTION AGENCY

Future Sample Pre-Renovation Form

This sample form may be used by renovation firms to document compliance with the Federal pre-renovation education and renovation, repair, and painting regulations.

Occupant Confirmation

Pamphlet Receipt

❏ I have received a copy of the lead hazard information pamphlet informing me of the potential risk of the lead hazard exposure from renovation activity to be performed in my dwelling unit. I received this pamphlet before the work began.

Owner-occupant Opt-out Acknowledgment

❏ (A) I confirm that I own and live in this property, that no child under the age of 6 resides here, that no pregnant woman resides here, and that this property is not a child-occupied facility.

Note: A child resides in the primary residence of his or her custodial parents, legal guardians, foster parents, or informal caretaker if the child lives and sleeps most of the time at the caretaker's residence.

Note: A child-occupied facility is a pre-1978 building visited regularly by the same child, under 6 years of age, on at least two different days within any week, for at least 3 hours each day, provided that the visits total at least 60 hours annually.

If Box A is checked, check either Box B or Box C, but not both.

❏ (B) I request that the renovation firm use the lead-safe work practices required by EPA's Renovation, Repair, and Painting Rule; or

❏ (C) I understand that the firm performing the renovation will not be required to use the lead-safe work practices required by EPA's Renovation, Repair, and Painting Rule.

_____

Printed Name of Owner-occupant

_____ _____

Signature of Owner-occupant Signature Date

Renovator's Self Certification Option (for tenant-occupied dwellings only)

***Instructions to Renovator*:** If the lead hazard information pamphlet was delivered but a tenant signature was not obtainable, you may check the appropriate box below.

❏ **Declined** – I certify that I have made a good faith effort to deliver the lead hazard information pamphlet to the rental dwelling unit listed below at the date and time indicated and that the occupant declined to sign the confirmation of receipt. I further certify that I have left a copy of the pamphlet at the unit with the occupant.

❏ **Unavailable for signature** – I certify that I have made a good faith effort to deliver the lead hazard information pamphlet to the rental dwelling unit listed below and that the occupant was unavailable to sign the confirmation of receipt. I further certify that I have left a copy of the pamphlet at the unit by sliding it under the door or by (fill in how pamphlet was left). _____

_____ _____

Printed Name of Person Certifying Delivery Attempted Delivery Date

_____

Signature of Person Certifying Lead Pamphlet Delivery

_____

_____

Unit Address

Note Regarding Mailing Option — As an alternative to delivery in person, you may mail the lead hazard information pamphlet to the owner and/or tenant. Pamphlet must be mailed at least seven days before renovation. Mailing must be documented by a certificate of mailing from the post office.

Note: This form is not effective until April 2010.

1-800-424-LEAD (5323)
www.epa.gov/lead

EPA-740-F-08-002
March 2008

APPENDIX B

XRF TESTING DATA
PAGES 1-17

GLYNN ARCHER ELEMENTARY SCHOOL - 1302 WHITE STREET, KEY WEST, FL

Reading Nc	Type	COMPONENT	SUBSTRATE	SIDE	CONDITION	COLOR	ROOM TYPE	ROOM NUMBER	FLOOR	SITE/ADDRESS	BLDG	Results	PbC
1	PAINT	CAL	WOOD	CALIBRATE	INTACT	ORANGE	CR	100	FIRST	GLYNN ARCHER SCHL	A	Positive	1
2	PAINT	DOOR	WOOD	A S	INTACT	BLUE	CR	100	FIRST	GLYNN ARCHER SCHL	A	Negative	0.19
3	PAINT	DOOR C	WOOD	A S	Not Intact- FAIR	BLUE	CR	100	FIRST	GLYNN ARCHER SCHL	A	Negative	-0.56
4	PAINT	BASEBOARD	WOOD	B	Not Intact- FAIR	BLUE	CR	100	FIRST	GLYNN ARCHER SCHL	A	Negative	0.5
5	PAINT	WALL	PLASTER	C	Not Intact- FAIR	BEIGE	CR	100	FIRST	GLYNN ARCHER SCHL	A	Negative	0
6	PAINT	WALL	PLASTER	D	INTACT	BEIGE	CR	100	FIRST	GLYNN ARCHER SCHL	A	Negative	0.8
7	PAINT	TRIM	WOOD	B	Not Intact-POOR	BEIGE	CR	100	FIRST	GLYNN ARCHER SCHL	A	Negative	0.13
8	PAINT	WALL	CERAMIC TILE	C	INTACT	BEIGE	CR	100	FIRST	GLYNN ARCHER SCHL	A	Negative	0.04
9	PAINT	FLOOR	CERAMIC TILE	C	INTACT	WHITE	CR	100	FIRST	GLYNN ARCHER SCHL	A	Negative	0.02
10	PAINT	DOOR C	WOOD	B	INTACT	BEIGE	CR	100	FIRST	GLYNN ARCHER SCHL	A	Negative	0
11	PAINT	DOOR C	WOOD	A	INTACT	BLUE	BATHROOM	122	FIRST	GLYNN ARCHER SCHL	A	Negative	0.08
12	PAINT	DOOR C	WOOD	A	Not Intact-POOR	BLUE	BATHROOM	122	FIRST	GLYNN ARCHER SCHL	A	Negative	0.24
13	PAINT	DOOR	WOOD	A	INTACT	BLUE	BATHROOM	122	FIRST	GLYNN ARCHER SCHL	A	Negative	0.01
14	PAINT	WALL	PLASTER	A	Not Intact- FAIR	BEIGE	BATHROOM	122	FIRST	GLYNN ARCHER SCHL	A	Negative	0.14
15	PAINT	WALL	PLASTER	D	Not Intact-POOR	BEIGE	BATHROOM	122	FIRST	GLYNN ARCHER SCHL	A	Positive	1.7
16	PAINT	WALL	PLASTER	D	Not Intact-POOR	BEIGE	BATHROOM	122	FIRST	GLYNN ARCHER SCHL	A	Positive	1.5
17	PAINT	WALL	PLASTER	B	INTACT	BEIGE	BATHROOM	122	FIRST	GLYNN ARCHER SCHL	A	Positive	1
18	PAINT	WALL	PLASTER	B	INTACT	BEIGE	BATHROOM	122	FIRST	GLYNN ARCHER SCHL	A	Negative	0.7
19	PAINT	WALL	CERAMIC TILE	A	INTACT	BEIGE	BATHROOM	122	FIRST	GLYNN ARCHER SCHL	A	Negative	0.02
20	PAINT	FLOOR	CERAMIC TILE	A	INTACT	GREEN	BATHROOM	122	FIRST	GLYNN ARCHER SCHL	A	Negative	0.01
21	PAINT	TRIM	WOOD	A	Not Intact-POOR	BEIGE	BATHROOM	122	FIRST	GLYNN ARCHER SCHL	A	Negative	0.01
22	PAINT	DOOR	WOOD	A	INTACT	BLUE	BATHROOM	124	FIRST	GLYNN ARCHER SCHL	A	Negative	0.01
23	PAINT	DOOR C	WOOD	A	Not Intact-POOR	BLUE	BATHROOM	124	FIRST	GLYNN ARCHER SCHL	A	Negative	0.01
24	PAINT	DOOR C	WOOD	A	INTACT	BEIGE	BATHROOM	124	FIRST	GLYNN ARCHER SCHL	A	Negative	0
25	PAINT	WALL	PLASTER	D	INTACT	BEIGE	BATHROOM	124	FIRST	GLYNN ARCHER SCHL	A	Positive	1.8
26	PAINT	WALL	PLASTER	D	INTACT	BEIGE	BATHROOM	124	FIRST	GLYNN ARCHER SCHL	A	Positive	1.4
27	PAINT	WALL	PLASTER	C	INTACT	BEIGE	BATHROOM	124	FIRST	GLYNN ARCHER SCHL	A	Positive	1.3
28	PAINT	WALL	PLASTER	C	INTACT	BEIGE	BATHROOM	124	FIRST	GLYNN ARCHER SCHL	A	Positive	1.4
29	PAINT	WALL	CERAMIC TILE	A	INTACT	BEIGE	BATHROOM	124	FIRST	GLYNN ARCHER SCHL	A	Negative	0.01
30	PAINT	FLOOR	CERAMIC TILE	A	INTACT	BEIGE	BATHROOM	124	FIRST	GLYNN ARCHER SCHL	A	Negative	0.5
31	PAINT	SINK	METAL	D	INTACT	WHITE	BATHROOM	124	FIRST	GLYNN ARCHER SCHL	A	Negative	0.06
32	PAINT	TOILET	CERAMIC TILE	D	INTACT	WHITE	BATHROOM	124	FIRST	GLYNN ARCHER SCHL	A	Negative	0.02
33	PAINT	DOOF	WOOD	D	Not Intact-POOR	BLUE	BATHROOM	124	FIRST	GLYNN ARCHER SCHL	A	Negative	0.26
34	PAINT	DOOR	WOOD	D	Not Intact-POOR	BEIGE	BATHROOM	124	FIRST	GLYNN ARCHER SCHL	A	Negative	0.18

A = SOUTH B = WEST C = NORTH D = EAST

GLYNN ARCHER ELEMENTARY SCHOOL - 1302 WHITE STREET, KEY WEST, FL

Reading Nc	Type	COMPONENT	SUBSTRATE	SIDE	CONDITION	COLOR	ROOM TYPE	ROOM NUMBER	FLOOR	SITE/ADDRESS	BLDG	Results	PbC
35	PAINT	DOOR C	WOOD	D	Not Intact-POOR	BEIGE	BATHROOM	124	FIRST	GLYNN ARCHER SCHL	A	Negative	0.15
36	PAINT	DOOR C	WOOD	D	Not Intact- FAIR	BLUE	BATHROOM	124	FIRST	GLYNN ARCHER SCHL	A	Negative	0.4
37	PAINT	WALL	PLASTER	D	Not Intact-POOR	BLUE	BATHROOM	124	FIRST	GLYNN ARCHER SCHL	A	Negative	0.5
38	PAINT	WALL	PLASTER	D	Not Intact-POOR	BLUE	BATHROOM	124	FIRST	GLYNN ARCHER SCHL	A	Negative	0.09
39	PAINT	WALL	PLASTER	C	INTACT	BLUE	BATHROOM	124	FIRST	GLYNN ARCHER SCHL	A	Positive	1.2
40	PAINT	WALL	PLASTER	C	INTACT	BLUE	BATHROOM	124	FIRST	GLYNN ARCHER SCHL	A	Positive	1.1
41	PAINT	WALL	PLASTER	D	INTACT	BLUE	BATHROOM	124	FIRST	GLYNN ARCHER SCHL	A	Negative	0
42	PAINT	BASEBOARD	WOOD	D	INTACT	BEIGE	BATHROOM	124	FIRST	GLYNN ARCHER SCHL	A	Negative	0.15
43	PAINT	WALL	PLASTER	A	INTACT	BEIGE	BATHROOM	124	FIRST	GLYNN ARCHER SCHL	A	Positive	3
44	PAINT	WALL	PLASTER	A	INTACT	BEIGE	BATHROOM	124	FIRST	GLYNN ARCHER SCHL	A	Positive	2.9
45	PAINT	WALL	PLASTER	C	INTACT	BEIGE	BATHROOM	124	FIRST	GLYNN ARCHER SCHL	A	Positive	3
46	PAINT	TRIM	WOOD	C	INTACT	BLUE	BATHROOM	124	FIRST	GLYNN ARCHER SCHL	A	Negative	0.01
47	PAINT	WALL	PLASTER	C	INTACT	BLUE	BATHROOM	124	FIRST	GLYNN ARCHER SCHL	A	Negative	-0.18
48	PAINT	WALL	PLASTER	C	INTACT	BLUE	BATHROOM	124	FIRST	GLYNN ARCHER SCHL	A	Negative	0.12
49	PAINT	WALL	PLASTER	A	INTACT	BLUE	BATHROOM	124	FIRST	GLYNN ARCHER SCHL	A	Negative	0.07
50	PAINT	WALL	PLASTER	D	INTACT	BLUE	BATHROOM	124	FIRST	GLYNN ARCHER SCHL	A	Positive	1.1
51	PAINT	WALL	CONCRETE	D	INTACT	BLUE	BATHROOM	124	FIRST	GLYNN ARCHER SCHL	A	Positive	1.5
52	PAINT	WALL	CONCRETE	D	INTACT	BEIGE	BATHROOM	124	FIRST	GLYNN ARCHER SCHL	A	Negative	0.2
53	PAINT	WALL	CONCRETE	D	INTACT	BEIGE	BATHROOM	124	FIRST	GLYNN ARCHER SCHL	A	Negative	0.24
54	PAINT	WALL	CONCRETE	D	INTACT	BEIGE	BATHROOM	124	FIRST	GLYNN ARCHER SCHL	A	Negative	0.8
55	PAINT	BASEBOARD	WOOD	D	INTACT	BLUE	BATHROOM	124	FIRST	GLYNN ARCHER SCHL	A	Negative	0.3
56	PAINT	DOOR	WOOD	D	Not Intact- FAIR	BLUE	BATHROOM	124	FIRST	GLYNN ARCHER SCHL	A	Negative	0
57	PAINT	DOOR C	WOOD	D	INTACT	BLUE	BATHROOM	124	FIRST	GLYNN ARCHER SCHL	A	Negative	0.06
58	PAINT	DOOR C	WOOD	D	Not Intact- FAIR	BLUE	CLEAN U	120	FIRST	GLYNN ARCHER SCHL	A	Negative	0.02
59	PAINT	DOOR	WOOD	D	Not Intact-POOR	BEIGE	CLEAN U	120	FIRST	GLYNN ARCHER SCHL	A	Negative	0.13
60	PAINT	BKCSE SHELF	WOOD	D	Not Intact-POOR	BEIGE	CLEAN U	120	FIRST	GLYNN ARCHER SCHL	A	Negative	0.01
61	PAINT	WALL	PLASTER	C	Not Intact- FAIR	BEIGE	CLEAN U	120	FIRST	GLYNN ARCHER SCHL	A	Negative	0
62	PAINT	WALL	WOOD	A	INTACT	BLUE	OFFICE	119	FIRST	GLYNN ARCHER SCHL	A	Negative	0
63	PAINT	WALL	WOOD	B	INTACT	BLUE	OFFICE	119	FIRST	GLYNN ARCHER SCHL	A	Negative	0
64	PAINT	WALL	WOOD	C	INTACT	BLUE	OFFICE	119	FIRST	GLYNN ARCHER SCHL	A	Negative	0.01
65	PAINT	BASEBOARD	WOOD	C	Not Intact- FAIR	BLUE	OFFICE	119	FIRST	GLYNN ARCHER SCHL	A	Negative	0
66	PAINT	DOOR	WOOD	B	INTACT	BLUE	OFFICE	119	FIRST	GLYNN ARCHER SCHL	A	Negative	0.1
67	PAINT	DOOR C	WOOD	B	INTACT	WHITE	OFFICE	119	FIRST	GLYNN ARCHER SCHL	A	Negative	0.01
68	PAINT	DOOR J	WOOD	B	INTACT	WHITE	OFFICE	119	FIRST	GLYNN ARCHER SCHL	A	Negative	0.05
		A = SOUTH		B = WEST		C = NORTH		D = EAST					

GLYNN ARCHER ELEMENTARY SCHOOL - 1302 WHITE STREET, KEY WEST, FL

Reading Nc	Type	COMPONENT	SUBSTRATE	SIDE	CONDITION	COLOR	ROOM TYPE	ROOM NUMBER	FLOOR	SITE/ADDRESS	BLDG	Results	PbC
69	PAINT	WALL	WOOD	C	INTACT	BEIGE	OFFICE	119	FIRST	GLYNN ARCHER SCHL	A	Negative	0
70	PAINT	WALL	CONCRETE	C	INTACT	BEIGE	OFFICE	119G	FIRST	GLYNN ARCHER SCHL	A	Negative	0.6
71	PAINT	BASEBOARD	WOOD	D	Not Intact-POOR	BEIGE	OFFICE	119G	FIRST	GLYNN ARCHER SCHL	A	Negative	0.4
72	PAINT	W SILL	WOOD	D	INTACT	WHITE	OFFICE	119F	FIRST	GLYNN ARCHER SCHL	A	Negative	0
73	PAINT	W SILL	WOOD	C	INTACT	BLUE	OFFICE	119F	FIRST	GLYNN ARCHER SCHL	A	Negative	0
74	PAINT	DOOR	WOOD	C	Not Intact-POOR	BLUE	CR	102	FIRST	GLYNN ARCHER SCHL	A	Negative	0.19
75	PAINT	DOOR C	WOOD	C	Not Intact-POOR	BLUE	CR	102	FIRST	GLYNN ARCHER SCHL	A	Negative	-0.02
76	PAINT	DOOR C	WOOD	C	INTACT	WHITE	CR	102	FIRST	GLYNN ARCHER SCHL	A	Negative	0.26
77	PAINT	WALL	PLASTER	C	INTACT	WHITE	CR	102	FIRST	GLYNN ARCHER SCHL	A	Negative	0.8
78	PAINT	WALL	PLASTER	A	INTACT	WHITE	CR	102	FIRST	GLYNN ARCHER SCHL	A	Negative	0.6
79	PAINT	WALL	CONCRETE	D	INTACT	WHITE	CR	102	FIRST	GLYNN ARCHER SCHL	A	Negative	0.4
80	PAINT	WALL	CONCRETE	B	INTACT	WHITE	CR	102	FIRST	GLYNN ARCHER SCHL	A	Negative	0.22
81	PAINT	BASEBOARD	WOOD	B	INTACT	BLACK	CR	102	FIRST	GLYNN ARCHER SCHL	A	Negative	0.4
82	PAINT	STR NEWAL P(	WOOD	C	Not Intact- FAIR	BLUE	STAIRS	STAIRS	FIRST	GLYNN ARCHER SCHL	A	Negative	0.06
83	PAINT	STR HAND RAI	WOOD	C	Not Intact- FAIR	BLUE	STAIRS	STAIRS	FIRST	GLYNN ARCHER SCHL	A	Negative	-0.12
84	PAINT	STR HAND RAI	WOOD	B	INTACT	BLUE	STAIRS	STAIRS	FIRST	GLYNN ARCHER SCHL	A	Negative	0.17
85	PAINT	WALL	PLASTER	B	INTACT	BLUE	STAIRS	STAIRS	FIRST	GLYNN ARCHER SCHL	A	Negative	0.11
86	PAINT	WALL	PLASTER	B	INTACT	BEIGE	STAIRS	STAIRS	FIRST	GLYNN ARCHER SCHL	A	Positive	3
87	PAINT	TRIM	WOOD	B	INTACT	BLUE	STAIRS	STAIRS	FIRST	GLYNN ARCHER SCHL	A	Negative	0.01
88	PAINT	DOOR	WOOD	D	Not Intact- FAIR	BLUE	CR	205	SECOND	GLYNN ARCHER SCHL	A	Negative	0.14
89	PAINT	DOOR C	WOOD	D	Not Intact-POOR	BLUE	CR	205	SECOND	GLYNN ARCHER SCHL	A	Negative	0.22
90	PAINT	DOOR C	WOOD	D	Not Intact-POOR	RED	CR	205	SECOND	GLYNN ARCHER SCHL	A	Negative	0.14
91	PAINT	BASEBOARD	WOOD	D	Not Intact- FAIR	RED	CR	205	SECOND	GLYNN ARCHER SCHL	A	Negative	0.5
92	PAINT	TRIM	WOOD	D	Not Intact- FAIR	RED	CR	205	SECOND	GLYNN ARCHER SCHL	A	Negative	0
93	PAINT	WAL	PLASTER	A	INTACT	BLUE	CR	205	SECOND	GLYNN ARCHER SCHL	A	Negative	0
94	PAINT	WAL	PLASTER	B	INTACT	BLUE	CR	205	SECOND	GLYNN ARCHER SCHL	A	Negative	0
95	PAINT	WAL	PLASTER	C	INTACT	BEIGE	CORR	CORR	SECOND	GLYNN ARCHER SCHL	A	Negative	0.1
96	PAINT	WAL	PLASTER	C	INTACT	BEIGE	CORR	CORR	SECOND	GLYNN ARCHER SCHL	A	Negative	0.8
97	PAINT	WAL	PLASTER	C	INTACT	BEIGE	CORR	CORR	SECOND	GLYNN ARCHER SCHL	A	Negative	0.16
98	PAINT	WAL	PLASTER	C	INTACT	BEIGE	CORR	CORR	SECOND	GLYNN ARCHER SCHL	A	Negative	0.26
99	PAINT	WAL	PLASTER	C	Not Intact- FAIR	BLUE	CORR	CORR	SECOND	GLYNN ARCHER SCHL	A	Negative	0.01
100	PAINT	WAL	PLASTER	C	INTACT	BLUE	CORR	CORR	SECOND	GLYNN ARCHER SCHL	A	Negative	0.01
101	PAINT	WAL	PLASTER	B	INTACT	BLUE	CORR	CORR	SECOND	GLYNN ARCHER SCHL	A	Negative	0.19
102	PAINT	WAL	PLASTER	A	INTACT	BLUE	CORR	CORR	SECOND	GLYNN ARCHER SCHL	A	Negative	0.1
		A = SOUTH		B = WEST		C = NORTH		D = EAST					

GLYNN ARCHER ELEMENTARY SCHOOL - 1302 WHITE STREET, KEY WEST, FL

Reading Nc	Type	COMPONENT	SUBSTRATE	SIDE	CONDITION	COLOR	ROOM TYPE	ROOM NUMBER	FLOOR	SITE/ADDRESS	BLDG	Results	PbC
103	PAINT	WAL	PLASTER	A	INTACT	BLUE	CORR	CORR	SECOND	GLYNN ARCHER SCHL	A	Negative	0
104	PAINT	WALL	PLASTER	A	INTACT	BEIGE	CORR	CORR	SECOND	GLYNN ARCHER SCHL	A	Negative	0.4
105	PAINT	WALL	PLASTER	A	INTACT	BEIGE	CORR	CORR	SECOND	GLYNN ARCHER SCHL	A	Negative	0.9
106	PAINT	WALL	PLASTER	A	INTACT	BEIGE	CORR	CORR	SECOND	GLYNN ARCHER SCHL	A	Negative	0.26
107	PAINT	DOOR	WOOD	C	Not Intact- FAIR	BLUE	CR	203	SECOND	GLYNN ARCHER SCHL	A	Negative	0.16
108	PAINT	DOOR C	WOOD	C	INTACT	BLUE	CR	203	SECOND	GLYNN ARCHER SCHL	A	Negative	0.08
109	PAINT	BASEBOARD	WOOD	C	Not Intact-POOR	BLACK	CR	203	SECOND	GLYNN ARCHER SCHL	A	Negative	0.27
110	PAINT	TRIM	WOOD	A	Not Intact- FAIR	BLUE	CR	203	SECOND	GLYNN ARCHER SCHL	A	Positive	2.1
111	PAINT	WALL	WOOD	A	INTACT	BEIGE	CR	203	SECOND	GLYNN ARCHER SCHL	A	Negative	0.18
112	PAINT	WALL	WOOD	B	Not Intact-POOR	BEIGE	CR	203	SECOND	GLYNN ARCHER SCHL	A	Negative	0
113	PAINT	WALL	PLASTER	B	INTACT	BEIGE	CR	203	SECOND	GLYNN ARCHER SCHL	A	Positive	1.8
114	PAINT	WALL	PLASTER	C	INTACT	BEIGE	CR	203	SECOND	GLYNN ARCHER SCHL	A	Positive	1.7
115	PAINT	WALL	PLASTER	C	INTACT	BEIGE	CR	202	SECOND	GLYNN ARCHER SCHL	A	Negative	0.16
116	PAINT	WALL	PLASTER	B	INTACT	BEIGE	CR	202	SECOND	GLYNN ARCHER SCHL	A	Negative	0.17
117	PAINT	WALL	PLASTER	A	Not Intact- FAIR	BEIGE	CR	202	SECOND	GLYNN ARCHER SCHL	A	Negative	0.12
118	PAINT	BASEBOARD	WOOD	A	INTACT	BEIGE	CR	202	SECOND	GLYNN ARCHER SCHL	A	Negative	0.17
119	PAINT	WALL	DRYWALL	D	INTACT	BEIGE	CR	202	SECOND	GLYNN ARCHER SCHL	A	Negative	0
120	PAINT	DOOR	WOOD	C	Not Intact- FAIR	BLUE	CR	202	SECOND	GLYNN ARCHER SCHL	A	Negative	0.15
121	PAINT	DOOR C	WOOD	C	Not Intact- FAIR	BLUE	CR	202	SECOND	GLYNN ARCHER SCHL	A	Negative	0.11
122	PAINT	DOOR C	WOOD	C	Not Intact- FAIR	PURPLE	CR	213	SECOND	GLYNN ARCHER SCHL	A	Negative	0.16
123	PAINT	DOOR	WOOD	C	Not Intact-POOR	PURPLE	CR	213	SECOND	GLYNN ARCHER SCHL	A	Negative	0.05
124	PAINT	BASEBOARD	WOOD	C	Not Intact-POOR	BLACK	CR	213	SECOND	GLYNN ARCHER SCHL	A	Negative	0.5
125	PAINT	WALL	PLASTER	C	Not Intact-POOR	BEIGE	CR	213	SECOND	GLYNN ARCHER SCHL	A	Negative	0.24
126	PAINT	WALL	PLASTER	D	Not Intact- FAIR	BEIGE	CR	213	SECOND	GLYNN ARCHER SCHL	A	Negative	0.3
127	PAINT	WALL	PLASTER	A	Not Intact- FAIR	BEIGE	CR	213	SECOND	GLYNN ARCHER SCHL	A	Negative	0.9
128	PAINT	WALL	PLASTER	A	INTACT	PURPLE	CR	213	SECOND	GLYNN ARCHER SCHL	A	Negative	0.02
129	PAINT	WALL	PLASTER	C	Not Intact- FAIR	BEIGE	CR	200	SECOND	GLYNN ARCHER SCHL	A	Negative	0.2
130	PAINT	WALL	PLASTER	D	INTACT	BEIGE	CR	200	SECOND	GLYNN ARCHER SCHL	A	Negative	0
131	PAINT	WALL	DRYWALL	D	INTACT	BEIGE	CR	200	SECOND	GLYNN ARCHER SCHL	A	Negative	0
132	PAINT	WALL	PLASTER	A	INTACT	BEIGE	CR	200	SECOND	GLYNN ARCHER SCHL	A	Negative	0.19
133	PAINT	WALL	PLASTER	B	Not Intact-POOR	BEIGE	CR	200	SECOND	GLYNN ARCHER SCHL	A	Negative	0.24
134	PAINT	BASEBOARD	WOOD	B	Not Intact- FAIR	BEIGE	CR	200	SECOND	GLYNN ARCHER SCHL	A	Negative	0.2
135	PAINT	DOOR	WOOD	C	Not Intact-POOR	BEIGE	CR	200	SECOND	GLYNN ARCHER SCHL	A	Negative	0.15
136	PAINT	DOOR C	WOOD	C	Not Intact-POOR	BEIGE	CR	200	SECOND	GLYNN ARCHER SCHL	A	Negative	0.29
		A = SOUTH		B = WEST		C = NORTH		D = EAST					

GLYNN ARCHER ELEMENTARY SCHOOL - 1302 WHITE STREET, KEY WEST, FL

Reading Nc	Type	COMPONENT	SUBSTRATE	SIDE	CONDITION	COLOR	ROOM TYPE	ROOM NUMBER	FLOOR	SITE/ADDRESS	BLDG	Results	PbC
137	PAINT	DOOR C	WOOD	D	Not Intact-POOR	PINK	CR	204	SECOND	GLYNN ARCHER SCHL	A	Negative	0.16
138	PAINT	DOOR	WOOD	D	Not Intact-POOR	PINK	CR	204	SECOND	GLYNN ARCHER SCHL	A	Negative	0.22
139	PAINT	BASEBOARD	WOOD	D	Not Intact- FAIR	BLUE	CR	204	SECOND	GLYNN ARCHER SCHL	A	Negative	0.5
140	PAINT	WALL	PLASTER	D	Not Intact-POOR	BLUE	CR	204	SECOND	GLYNN ARCHER SCHL	A	Negative	0.22
141	PAINT	WALL	PLASTER	A	Not Intact-POOR	BLUE	CR	204	SECOND	GLYNN ARCHER SCHL	A	Negative	0.9
142	PAINT	WALL	PLASTER	A	Not Intact-POOR	BEIGE	CR	204	SECOND	GLYNN ARCHER SCHL	A	Negative	0.16
143	PAINT	WALL	PLASTER	A	Not Intact-POOR	BEIGE	CR	204	SECOND	GLYNN ARCHER SCHL	A	Negative	0.25
144	PAINT	TRIM	WOOD	D	Not Intact-POOR	PINK	CR	204	SECOND	GLYNN ARCHER SCHL	A	Negative	0.4
145	PAINT	WALL	CERAMIC TILE	D	INTACT	WHITE	BATHROOM	212	SECOND	GLYNN ARCHER SCHL	A	Negative	0.04
146	PAINT	FLOOR	CERAMIC TILE	D	Not Intact- FAIR	WHITE	BATHROOM	212	SECOND	GLYNN ARCHER SCHL	A	Positive	1.3
147	PAINT	WALL	PLASTER	C	Not Intact- FAIR	BEIGE	BATHROOM	212	SECOND	GLYNN ARCHER SCHL	A	Negative	0
148	PAINT	WALL	PLASTER	D	Not Intact- FAIR	BEIGE	BATHROOM	212	SECOND	GLYNN ARCHER SCHL	A	Negative	0.5
149	PAINT	WALL	PLASTER	A	Not Intact- FAIR	BEIGE	BATHROOM	212	SECOND	GLYNN ARCHER SCHL	A	Negative	0.7
150	PAINT	DOOR	WOOD	A	Not Intact- FAIR	GREEN	BATHROOM	212	SECOND	GLYNN ARCHER SCHL	A	Negative	0.11
151	PAINT	DOOR	WOOD	A	Not Intact- FAIR	BLUE	BATHROOM	212	SECOND	GLYNN ARCHER SCHL	A	Negative	0.11
152	PAINT	DOOR C	WOOD	A	Not Intact- FAIR	BLUE	BATHROOM	212	SECOND	GLYNN ARCHER SCHL	A	Negative	0.4
153	PAINT	CALIBRATE	WOOD	CALIBRATE	INTACT	ORANGE	BATHROOM	212	SECOND	GLYNN ARCHER SCHL	A	Positive	1
154	SHUTTER_CAL												2.76
155	PAINT	CAL	WOOD	CALIBRATE	INTACT	ORANGE	CORR	CORR OUT 120	FIRST	GLYNN ARCHER SCHL	A	Positive	1.1
156	PAINT	WALL	PLASTER	CALIBRATE	Not Intact-POOR	BEIGE	CORR	CORR OUT 120	FIRST	GLYNN ARCHER SCHL	A	Positive	3.2
157	PAINT	DOOR	WOOD	A	Not Intact- FAIR	BLUE	CORR	AUD 117	FIRST	GLYNN ARCHER SCHL	AUD	Negative	0.03
158	PAINT	DOOR C	WOOD	A	INTACT	BLUE	CORR	AUD 117	FIRST	GLYNN ARCHER SCHL	AUD	Negative	0.16
159	PAINT	DOOR C	WOOD	A	Not Intact- FAIR	GREEN	CORR	AUD 117	FIRST	GLYNN ARCHER SCHL	AUD	Negative	0.29
160	PAINT	BASEBOARD	WOOD	B	Not Intact- FAIR	GREEN	CORR	AUD 117	FIRST	GLYNN ARCHER SCHL	AUD	Negative	0.13
161	PAINT	DOOR	WOOD	A	INTACT	WHITE	CORR	AUD 117	FIRST	GLYNN ARCHER SCHL	AUD	Negative	0.23
162	PAINT	WALL	PLASTER	A	INTACT	BEIGE	CORR	AUD 117	FIRST	GLYNN ARCHER SCHL	AUD	Positive	1
163	PAINT	WALL	PLASTER	B	INTACT	BEIGE	CORR	AUD 117	FIRST	GLYNN ARCHER SCHL	AUD	Negative	0.15
164	PAINT	WALL	PLASTER	D	Not Intact- FAIR	BEIGE	CORR	AUD 117	FIRST	GLYNN ARCHER SCHL	AUD	Positive	1
165	PAINT	WALL	CONCRETE	D	INTACT	BEIGE	CORR	AUD 117	FIRST	GLYNN ARCHER SCHL	AUD	Positive	1
166	PAINT	COLUMN	CONCRETE	D	INTACT	BEIGE	CORR	AUD 117	FIRST	GLYNN ARCHER SCHL	AUD	Positive	1.2
167	PAINT	W SILL	PLASTER	D	Not Intact- FAIR	BEIGE	CORR	AUD 117	FIRST	GLYNN ARCHER SCHL	AUD	Negative	0.3
168	PAINT	DOOR	WOOD	D	Not Intact-POOR	BEIGE	CORR	AUD 117	FIRST	GLYNN ARCHER SCHL	AUD	Negative	0.18
169	PAINT	DOOR C	WOOD	D	Not Intact-POOR	GREEN	CORR	AUD 117	FIRST	GLYNN ARCHER SCHL	AUD	Negative	0.29
170	PAINT	FLOOR	WOOD	C	Not Intact- FAIR	BROWN	CORR	AUD 117	FIRST	GLYNN ARCHER SCHL	AUD	Negative	0
		A = SOUTH		B = WEST		C = NORTH		D = EAST					

GLYNN ARCHER ELEMENTARY SCHOOL - 1302 WHITE STREET, KEY WEST, FL

Reading Nc	Type	COMPONENT	SUBSTRATE	SIDE	CONDITION	COLOR	ROOM TYPE	ROOM NUMBER	FLOOR	SITE/ADDRESS	BLDG	Results	PbC
171	PAINT	TRIM	WOOD	C	Not Intact- FAIR	GREEN	CORR	AUD 117	FIRST	GLYNN ARCHER SCHL	AUD	Negative	0.23
172	PAINT	TRIM	WOOD	C	Not Intact- FAIR	GREEN	CORR	AUD 117	FIRST	GLYNN ARCHER SCHL	AUD	Negative	0.22
173	PAINT	WALL	PLASTER	C	INTACT	BEIGE	CORR	AUD 117	FIRST	GLYNN ARCHER SCHL	AUD	Negative	0.4
174	PAINT	WALL	CONCRETE	C	Not Intact- FAIR	BEIGE	CORR	AUD 117	FIRST	GLYNN ARCHER SCHL	AUD	Positive	1.1
175	PAINT	DOOR	WOOD	B	Not Intact- FAIR	BEIGE	CORR	AUD 117	FIRST	GLYNN ARCHER SCHL	AUD	Negative	0
176	PAINT	ST WALL	WOOD	C	Not Intact-POOR	BEIGE	CORR	AUD 117	FIRST	GLYNN ARCHER SCHL	AUD	Negative	0.12
177	PAINT	DOOR C	WOOD	B	Not Intact- FAIR	BEIGE	CORR	AUD 117	FIRST	GLYNN ARCHER SCHL	AUD	Negative	0.21
178	PAINT	DOOR C	WOOD	B	Not Intact-POOR	BEIGE	AUD	AUD 117C	FIRST	GLYNN ARCHER SCHL	AUD	Negative	0.2
179	PAINT	DOOR	WOOD	B	Not Intact- FAIR	BEIGE	AUD	AUD 117C	FIRST	GLYNN ARCHER SCHL	AUD	Negative	0.09
180	PAINT	DOOR C	WOOD	B	Not Intact-POOR	BEIGE	AUD	AUD 117D	FIRST	GLYNN ARCHER SCHL	AUD	Negative	0.09
181	PAINT	DOOR	WOOD	B	Not Intact-POOR	BEIGE	AUD	AUD 117D	FIRST	GLYNN ARCHER SCHL	AUD	Negative	0.08
182	PAINT	DOOR	WOOD	B	Not Intact- FAIR	PINK	AUD	AUD 117D	FIRST	GLYNN ARCHER SCHL	AUD	Positive	2.9
183	PAINT	DOOR C	WOOD	B	Not Intact-POOR	PINK	AUD	AUD 117D	FIRST	GLYNN ARCHER SCHL	AUD	Positive	2
184	PAINT	DOOR C	WOOD	B	Not Intact-POOR	GREY	AUD	AUD 117D	FIRST	GLYNN ARCHER SCHL	AUD	Negative	0.08
185	PAINT	BASEBOARD	WOOD	C	Not Intact-POOR	BLACK	AUD	AUD 117D	FIRST	GLYNN ARCHER SCHL	AUD	Negative	0.13
186	PAINT	BASEBOARD	WOOD	A	Not Intact-POOR	BLACK	AUD	AUD 117A	FIRST	GLYNN ARCHER SCHL	AUD	Negative	0.24
187	PAINT	DOOR	WOOD	D	Not Intact- FAIR	BEIGE	AUD	AUD 117A	FIRST	GLYNN ARCHER SCHL	AUD	Negative	0.06
188	PAINT	DOOR C	WOOD	D	Not Intact-POOR	GREY	AUD	AUD 117A	FIRST	GLYNN ARCHER SCHL	AUD	Negative	0.3
189	PAINT	DOOR C	WOOD	D	Not Intact-POOR	GREEN	AUD	AUD 117A	FIRST	GLYNN ARCHER SCHL	AUD	Negative	0.23
190	PAINT	DOOR C	WOOD	C	Not Intact-POOR	GREY	AUD	AUD 117A	FIRST	GLYNN ARCHER SCHL	AUD	Negative	0.5
191	PAINT	DOOR	WOOD	C	Not Intact-POOR	GREY	AUD	AUD 117A	FIRST	GLYNN ARCHER SCHL	AUD	Negative	0.5
192	PAINT	WALL	PLASTER	C	Not Intact- FAIR	WHITE	AUD	AUD 117A	FIRST	GLYNN ARCHER SCHL	AUD	Negative	0.4
193	PAINT	AUD CHAIRS	PLASTER	C	Not Intact- FAIR	BROWN	AUD	AUD 117	FIRST	GLYNN ARCHER SCHL	AUD	Negative	0
194	PAINT	AUD CHAIRS	PLASTER	A	Not Intact- FAIR	BROWN	AUD	AUD 117	FIRST	GLYNN ARCHER SCHL	AUD	Negative	0
195	PAINT	DOOR	WOOD	A	Not Intact- FAIR	BLUE	CORR	CORR	FIRST	GLYNN ARCHER SCHL	B	Positive	6.8
196	PAINT	DOOR C	WOOD	A	Not Intact- FAIR	BLUE	CORR	CORR	FIRST	GLYNN ARCHER SCHL	B	Negative	0.21
197	PAINT	DOOR C	WOOD	A	Not Intact- FAIR	BLUE	CORR	CORR	FIRST	GLYNN ARCHER SCHL	B	Negative	0.21
198	PAINT	DOOR S	METAL	A	Not Intact- FAIR	BLUE	CORR	CORR	FIRST	GLYNN ARCHER SCHL	B	Negative	0.01
199	PAINT	TRIM	WOOD	A	Not Intact- FAIR	BLUE	CORR	CORR	FIRST	GLYNN ARCHER SCHL	B	Negative	0
200	PAINT	TRIM	WOOD	B	Not Intact- FAIR	BLUE	CORR	CORR	FIRST	GLYNN ARCHER SCHL	B	Negative	0.01
201	PAINT	WALL	WOOD	B	Not Intact- FAIR	BLUE	CORR	CORR	FIRST	GLYNN ARCHER SCHL	B	Negative	0.07
202	PAINT	WALL	PLASTER	B	Not Intact- FAIR	BEIGE	CORR	CORR	FIRST	GLYNN ARCHER SCHL	B	Negative	0.27
203	PAINT	WALL	PLASTER	A	Not Intact- FAIR	BEIGE	CORR	CORR	FIRST	GLYNN ARCHER SCHL	B	Negative	0.5
204	PAINT	WALL	CONCRETE	B	Not Intact- FAIR	BEIGE	CORR	CORR	FIRST	GLYNN ARCHER SCHL	B	Negative	0.21
		A = SOUTH		B = WEST		C = NORTH		D = EAST					

GLYNN ARCHER ELEMENTARY SCHOOL - 1302 WHITE STREET, KEY WEST, FL

Reading Nc	Type	COMPONENT	SUBSTRATE	SIDE	CONDITION	COLOR	ROOM TYPE	ROOM NUMBER	FLOOR	SITE/ADDRESS	BLDG	Results	PbC
205	PAINT	WALL	CONCRETE	B	Not Intact- FAIR	BLUE	CORR	CORR	FIRST	GLYNN ARCHER SCHL	B	Positive	1.7
206	PAINT	DOOR	WOOD	B	Not Intact- FAIR	BLUE	CORR	CORR	FIRST	GLYNN ARCHER SCHL	B	Negative	0
207	PAINT	DOOR C	WOOD	B	INTACT	BLUE	CORR	CORR	FIRST	GLYNN ARCHER SCHL	B	Negative	0.04
208	PAINT	TRIM	WOOD	B	INTACT	BLUE	CORR	CORR	FIRST	GLYNN ARCHER SCHL	B	Negative	0.03
209	PAINT	BASEBOARD	WOOD	B	Not Intact-POOR	BLUE	CORR	CORR	FIRST	GLYNN ARCHER SCHL	B	Negative	0.07
210	PAINT	WALLS	WOOD	B	Not Intact- FAIR	BLUE	CORR	CORR	FIRST	GLYNN ARCHER SCHL	B	Negative	0.03
211	PAINT	DOOR C	WOOD	B	Not Intact- FAIR	BLUE	CORR	CORR	FIRST	GLYNN ARCHER SCHL	B	Negative	0.4
212	PAINT	WALL	PLASTER	C	INTACT	BEIGE	CORR	CORR	FIRST	GLYNN ARCHER SCHL	B	Negative	0.22
213	PAINT	WALL	PLASTER	C	Not Intact- FAIR	BEIGE	CORR	CORR	FIRST	GLYNN ARCHER SCHL	B	Negative	0.5
214	PAINT	WALL	PLASTER	C	INTACT	BEIGE	CORR	CORR	FIRST	GLYNN ARCHER SCHL	B	Negative	0.4
215	PAINT	WALL	PLASTER	C	INTACT	BEIGE	CORR	CORR	FIRST	GLYNN ARCHER SCHL	B	Negative	0.3
216	PAINT	WALL	PLASTER	D	INTACT	BEIGE	CORR	CORR	FIRST	GLYNN ARCHER SCHL	B	Negative	0
217	PAINT	WALL	PLASTER	D	INTACT	BLUE	CORR	CORR	FIRST	GLYNN ARCHER SCHL	B	Negative	0.03
218	PAINT	WALL	PLASTER	A	INTACT	BEIGE	CORR	CORR	FIRST	GLYNN ARCHER SCHL	B	Negative	0.4
219	PAINT	DOOR	WOOD	DA	Not Intact- FAIR	BLUE	CORR	CORR	FIRST	GLYNN ARCHER SCHL	B	Positive	9
220	PAINT	DOOR	WOOD	DA	Not Intact-POOR	BLUE	CORR	CORR	FIRST	GLYNN ARCHER SCHL	B	Positive	9.2
221	PAINT	DOOR C	WOOD	DA	Not Intact-POOR	BLUE	CORR	CORR	FIRST	GLYNN ARCHER SCHL	B	Negative	0.17
222	PAINT	DOOR C	WOOD	CD	Not Intact-POOR	BLUE	CORR ST	CORR	FIRST	GLYNN ARCHER SCHL	B	Negative	0.23
223	PAINT	DOOR	WOOD	D	Not Intact- FAIR	BLUE	CORR ST	CORR	SECOND	GLYNN ARCHER SCHL	B	Negative	0.03
224	PAINT	DOOR C	WOOD	D	Not Intact- FAIR	BLUE	CORR ST	CORR	SECOND	GLYNN ARCHER SCHL	B	Negative	0.01
225	PAINT	BASEBOARD	WOOD	D	Not Intact- FAIR	BLUE	CORR ST	CORR	SECOND	GLYNN ARCHER SCHL	B	Negative	0.4
226	PAINT	WALL	CONCRETE	D	INTACT	BLUE	CORR ST	CORR	SECOND	GLYNN ARCHER SCHL	B	Positive	1.7
227	PAINT	WALL	CONCRETE	D	INTACT	BEIGE	CORR ST	CORR	SECOND	GLYNN ARCHER SCHL	B	Positive	1.5
228	PAINT	WALL	CONCRETE	D	INTACT	BEIGE	CORR ST	CORR	SECOND	GLYNN ARCHER SCHL	B	Positive	1.4
229	PAINT	DOOR	WOOD	D	INTACT	BLUE	CORR ST	CORR	SECOND	GLYNN ARCHER SCHL	B	Negative	0.04
230	PAINT	DOOR C	WOOD	D	INTACT	BLUE	CORR ST	CORR	SECOND	GLYNN ARCHER SCHL	B	Negative	0.02
231	PAINT	BASEBOARD	WOOD	A	Not Intact-POOR	BLUE	CORR ST	CORR	SECOND	GLYNN ARCHER SCHL	B	Negative	0.3
232	PAINT	WALL	WOOD	A	Not Intact- FAIR	BLUE	CORR ST	CORR	SECOND	GLYNN ARCHER SCHL	B	Negative	0.06
233	PAINT	WALL	WOOD	A	INTACT	BLUE	CORR ST	CORR	SECOND	GLYNN ARCHER SCHL	B	Negative	0.07
234	PAINT	WALL	PLASTER	A	INTACT	BEIGE	CORR ST	CORR	SECOND	GLYNN ARCHER SCHL	B	Positive	1.1
235	PAINT	WALL	PLASTER	A	INTACT	BEIGE	CORR ST	CORR	SECOND	GLYNN ARCHER SCHL	B	Negative	0.5
236	PAINT	WALL	DRYWALL	A	INTACT	BEIGE	CORR ST	CORR	SECOND	GLYNN ARCHER SCHL	B	Negative	0
237	PAINT	WALL	DRYWALL	A	INTACT	BLUE	CORR ST	CORR	SECOND	GLYNN ARCHER SCHL	B	Negative	0
238	PAINT	WALL	PLASTER	A	INTACT	BLUE	CORR ST	CORR	SECOND	GLYNN ARCHER SCHL	B	Negative	0.4

A = SOUTH B = WEST C = NORTH D = EAST

GLYNN ARCHER ELEMENTARY SCHOOL - 1302 WHITE STREET, KEY WEST, FL

Reading Nc	Type	COMPONENT	SUBSTRATE	SIDE	CONDITION	COLOR	ROOM TYPE	ROOM NUMBER	FLOOR	SITE/ADDRESS	INSPECTC	Results	PbC
239	PAINT	WALL	CONCRETE	B	Not Intact- FAIR	BLUE	CORR ST	CORR	SECOND	GAS BLDG B	B	Negative	0.29
240	PAINT	WALL	CONCRETE	B	Not Intact- FAIR	BLUE	CORR ST	CORR	SECOND	GAS BLDG B	B	Negative	0.12
241	PAINT	WALL	CONCRETE	B	Not Intact-POOR	BLUE	CORR ST	CORR	SECOND	GAS BLDG B	B	Positive	1.2
242	PAINT	WALL	CONCRETE	B	INTACT	BLUE	CORR ST	CORR	SECOND	GAS BLDG B	B	Negative	0.4
243	PAINT	WALL	PLASTER	C	INTACT	WHITE	CR	207	SECOND	GAS BLDG B	B	Negative	0.27
244	PAINT	WALL	CONCRETE	C	Not Intact- FAIR	WHITE	CR	207	SECOND	GAS BLDG B	B	Positive	1
245	PAINT	WALL	CONCRETE	A	INTACT	WHITE	CR	207	SECOND	GAS BLDG B	B	Negative	0
246	PAINT	WALL	CONCRETE	B	INTACT	WHITE	CR	207	SECOND	GAS BLDG B	B	Negative	0
247	PAINT	TRIM	WOOD	B	Not Intact- FAIR	WHITE	CR	207	SECOND	GAS BLDG B	B	Negative	0.11
248	PAINT	BASEBOARD	WOOD	B	Not Intact- FAIR	WHITE	CR	207	SECOND	GAS BLDG B	B	Negative	0.4
249	PAINT	DOOR	WOOD	B	Not Intact- FAIR	WHITE	CR	207	SECOND	GAS BLDG B	B	Negative	-0.11
250	PAINT	DOOR C	WOOD	B	Not Intact- FAIR	WHITE	CR	207	SECOND	GAS BLDG B	B	Negative	0.25
251	PAINT	DOOR C	WOOD	C	Not Intact- FAIR	BLUE	CR	215	SECOND	GAS BLDG B	B	Negative	0.4
252	PAINT	DOOR	WOOD	C	Not Intact- FAIR	BLUE	CR	215	SECOND	GAS BLDG B	B	Negative	0.19
253	PAINT	DOOR	WOOD	C	Not Intact-POOR	PURPLE	CR	215	SECOND	GAS BLDG B	B	Negative	0.7
254	PAINT	DOOR C	WOOD	C	Not Intact- FAIR	WHITE	CR	215	SECOND	GAS BLDG B	B	Negative	0.14
255	PAINT	BASEBOARD	WOOD	C	Not Intact- FAIR	WHITE	CR	215	SECOND	GAS BLDG B	B	Negative	0.21
256	PAINT	TRIM	WOOD	D	Not Intact- FAIR	WHITE	CR	215	SECOND	GAS BLDG B	B	Positive	2
257	PAINT	TRIM	WOOD	C	Not Intact- FAIR	WHITE	CR	215	SECOND	GAS BLDG B	B	Positive	1.4
258	PAINT	BASEBOARD	WOOD	C	Not Intact- FAIR	WHITE	CR	215	SECOND	GAS BLDG B	B	Negative	0.3
259	PAINT	DC	WOOD	B	Not Intact-POOR	WHITE	CR	215	SECOND	GAS BLDG B	B	Negative	0.4
260	PAINT	W F	WOOD	B	Not Intact-POOR	WHITE	CR	215	SECOND	GAS BLDG B	B	Negative	0.2
261	PAINT	WALL	PLASTER	A	Not Intact-POOR	WHITE	CR	215	SECOND	GAS BLDG B	B	Negative	0
262	PAINT	DOOR	WOOD	C	Not Intact- FAIR	BLUE	CR	215	SECOND	GAS BLDG B	B	Negative	0.4
263	PAINT	DOOR C	WOOD	C	INTACT	BLUE	CR	215	SECOND	GAS BLDG B	B	Negative	0.3
264	PAINT	DOOR C	WOOD	C	INTACT	BLUE	CR	216	SECOND	GAS BLDG B	B	Negative	0.24
265	PAINT	DOOR	WOOD	C	Not Intact- FAIR	BLUE	CR	216	SECOND	GAS BLDG B	B	Negative	0.22
266	PAINT	DOOR	WOOD	C	Not Intact-POOR	BEIGE	CR	216	SECOND	GAS BLDG B	B	Negative	0.24
267	PAINT	DOOR	WOOD	C	Not Intact- FAIR	BLUE	CR	216	SECOND	GAS BLDG B	B	Negative	0.15
268	PAINT	DOOR	WOOD	C	Not Intact-POOR	BEIGE	CR	216	SECOND	GAS BLDG B	B	Negative	0.11
269	PAINT	WALL	PLASTER	C	INTACT	WHITE	CR	216	SECOND	GAS BLDG B	B	Negative	0.9
270	PAINT	WALL	PLASTER	B	Not Intact- FAIR	WHITE	CR	216	SECOND	GAS BLDG B	B	Negative	0
271	PAINT	WALL	CERAMIC TILE	B	Not Intact- FAIR	WHITE	CR	216	SECOND	GAS BLDG B	B	Negative	0.1
272	PAINT	BASEBOARD	CERAMIC TILE	B	Not Intact-POOR	WHITE	CR	216	SECOND	GAS BLDG B	B	Positive	2.2
		A = SOUTH		B = WEST		C = NORTH		D = EAST					

GLYNN ARCHER ELEMENTARY SCHOOL - 1302 WHITE STREET, KEY WEST, FL

Reading Nc	Type	COMPONENT	SUBSTRATE	SIDE	CONDITION	COLOR	ROOM TYPE	ROOM NUMBER	FLOOR	SITE/ADDRESS	INSPECTC	Results	PbC
273	PAINT	BASEBOARD	CERAMIC TILE	B	Not Intact-POOR	WHITE	CR	216	SECOND	GAS BLDG B	B	Positive	1.8
274	PAINT	FLOOR	CERAMIC TILE	B	Not Intact- FAIR	GREY	CR	216	SECOND	GAS BLDG B	B	Negative	0.02
275	PAINT	TRIM	WOOD	B	Not Intact- FAIR	WHITE	CR	216	SECOND	GAS BLDG B	B	Negative	0.01
276	PAINT	WALL	DRYWALL	B	INTACT	BEIGE	CR	216	SECOND	GAS BLDG B	B	Negative	0
277	PAINT	WALL	PLASTER	D	INTACT	BEIGE	BR	217B	SECOND	GAS BLDG B	B	Negative	0
278	PAINT	WALL	CERAMIC TILE	D	INTACT	BEIGE	BR	217B	SECOND	GAS BLDG B	B	Negative	0.01
279	PAINT	FLOOR	CERAMIC TILE	D	Not Intact- FAIR	WHITE	BR	217B	SECOND	GAS BLDG B	B	Negative	0.01
280	PAINT	DOOR	WOOD	C	INTACT	BLUE	BR	217B	SECOND	GAS BLDG B	B	Negative	0.02
281	PAINT	DOOR C	WOOD	C	INTACT	BLUE	BR	217B	SECOND	GAS BLDG B	B	Negative	0
282	PAINT	DOOR C	WOOD	D	INTACT	BLUE	CR	206	SECOND	GAS BLDG B	B	Negative	0.09
283	PAINT	DOOR	WOOD	D	Not Intact- FAIR	BLUE	CR	206	SECOND	GAS BLDG B	B	Negative	0.05
284	PAINT	DOOR	WOOD	D	Not Intact- FAIR	BEIGE	CR	206	SECOND	GAS BLDG B	B	Negative	0.04
285	PAINT	BASEBOARD	WOOD	D	Not Intact-POOR	WHITE	CR	206	SECOND	GAS BLDG B	B	Negative	0.23
286	PAINT	WALL	PLASTER	B	Not Intact- FAIR	WHITE	CR	206	SECOND	GAS BLDG B	B	Negative	0.01
287	PAINT	WALL	PLASTER	A	Not Intact- FAIR	WHITE	CR	206	SECOND	GAS BLDG B	B	Positive	1.3
288	PAINT	WALL	PLASTER	D	INTACT	WHITE	CR	206	SECOND	GAS BLDG B	B	Positive	1.2
289	PAINT	WALL	PLASTER	C	INTACT	WHITE	CR	206	SECOND	GAS BLDG B	B	Negative	0
290	PAINT	TRIM	WOOD	D	Not Intact-POOR	GREEN	CR	206	SECOND	GAS BLDG B	B	Negative	0
291	PAINT	BKCSE	WOOD	B	Not Intact-POOR	GREEN	CR	206	SECOND	GAS BLDG B	B	Negative	0.03
292	PAINT	BKCSE	WOOD	B	Not Intact- FAIR	BROWN	CR	208	SECOND	GAS BLDG B	B	Negative	0.02
293	PAINT	CROWN MOLD	PLASTER	A	Not Intact-POOR	YELLOW	CR	208	SECOND	GAS BLDG B	B	Negative	0.14
294	PAINT	CROWN MOLD	WOOD	A	Not Intact-POOR	YELLOW	CR	208	SECOND	GAS BLDG B	B	Negative	0.07
295	PAINT	WALL	WOOD	A	Not Intact-POOR	YELLOW	CR	208	SECOND	GAS BLDG B	B	Negative	0.15
296	PAINT	WALL	PLASTER	A	Not Intact-POOR	YELLOW	CR	208	SECOND	GAS BLDG B	B	Negative	0.14
297	PAINT	CEILING	PLASTER	A	Not Intact-POOR	WHITE	CR	208	SECOND	GAS BLDG B	B	Negative	0.5
298	PAINT	WALL	PLASTER	B	Not Intact-POOR	BLUE	CR	208	SECOND	GAS BLDG B	B	Negative	0.3
299	PAINT	WALL	PLASTER	B	Not Intact-POOR	BLUE	CR	208	SECOND	GAS BLDG B	B	Negative	0.24
300	PAINT	WALL	PLASTER	C	Not Intact- FAIR	BLUE	CR	208	SECOND	GAS BLDG B	B	Negative	0.02
301	PAINT	WALL	PLASTER	D	Not Intact- FAIR	BLUE	CR	208	SECOND	GAS BLDG B	B	Negative	0
302	PAINT	BASEBOARD	WOOD	D	Not Intact-POOR	BLUE	CR	208	SECOND	GAS BLDG B	B	Negative	0
303	PAINT	TRIM	WOOD	D	Not Intact-POOR	BLUE	CR	208	SECOND	GAS BLDG B	B	Negative	0.04
304	PAINT	TRIM	WOOD	A	Not Intact- FAIR	BLUE	CR	208	SECOND	GAS BLDG B	B	Negative	0
305	PAINT	DOOR C	WOOD	A	Not Intact-POOR	BLUE	CR	208	SECOND	GAS BLDG B	B	Negative	0.2
306	PAINT	DOOR	WOOD	A	Not Intact-POOR	BLUE	CR	208	SECOND	GAS BLDG B	B	Negative	0.4

A = SOUTH B = WEST C = NORTH D = EAST

GLYNN ARCHER ELEMENTARY SCHOOL - 1302 WHITE STREET, KEY WEST, FL

Reading Nc	Type	COMPONENT	SUBSTRATE	SIDE	CONDITION	COLOR	ROOM TYPE	ROOM NUMBER	FLOOR	SITE/ADDRESS	INSPECTC	Results	PbC
307	SHUTTER_CAL												2.8
308	PAINT	CAL	WOOD	CALIBRATE	INTACT	ORANGE	N	N	SECOND	GAS	B	Positive	1
309	PAINT	CAL	WOOD	CALIBRATE	INTACT	ORANGE	N	N	SECOND	GAS	B	Positive	1.1
310	PAINT	DOOR	WOOD	A	Not Intact-POOR	BLUE	CR	209	SECOND	GAS	B	Negative	0.27
311	PAINT	DOOR C	WOOD	A	Not Intact-POOR	BLUE	CR	209	SECOND	GAS	B	Negative	0.15
312	PAINT	BASEBOARD	WOOD	A	Not Intact- FAIR	BLUE	CR	209	SECOND	GAS	B	Negative	0.6
313	PAINT	BASEBOARD	WOOD	A	Not Intact- FAIR	BLUE	CR	209	SECOND	GAS	B	Negative	0.28
314	PAINT	WALL	PLASTER	A	Not Intact- FAIR	BLUE	CR	209	SECOND	GAS	B	Negative	0.21
315	PAINT	WALL	PLASTER	C	Not Intact- FAIR	BLUE	CR	209	SECOND	GAS	B	Negative	0.3
316	PAINT	WALL	DRYWALL	D	Not Intact- FAIR	BLUE	CR	209	SECOND	GAS	B	Negative	0
317	PAINT	WALL	DRYWALL	B	Not Intact- FAIR	BLUE	CR	209	SECOND	GAS	B	Negative	0
318	PAINT	CBNT FRONT	WOOD	B	Not Intact- FAIR	WHITE	CR	209	SECOND	GAS	B	Negative	0.04
319	PAINT	DOOR	WOOD	B	Not Intact-POOR	WHITE	CR	210	SECOND	GAS	B	Negative	0.06
320	PAINT	DOOR C	WOOD	B	Not Intact-POOR	WHITE	CR	210	SECOND	GAS	B	Negative	0.26
321	PAINT	BASEBOARD	WOOD	B	Not Intact- FAIR	WHITE	CR	210	SECOND	GAS	B	Negative	0.25
322	PAINT	WALL	PLASTER	A	Not Intact- FAIR	BEIGE	CR	210	SECOND	GAS	B	Negative	0.3
323	PAINT	WALL	PLASTER	C	Not Intact- FAIR	BEIGE	CR	210	SECOND	GAS	B	Negative	0.01
324	PAINT	WALL	PLASTER	C	Not Intact- FAIR	BEIGE	CR	210	SECOND	GAS	B	Negative	0
325	PAINT	WALL	PLASTER	D	Not Intact-POOR	BEIGE	CR	210	SECOND	GAS	B	Negative	0.28
326	PAINT	WALL	PLASTER	A	Not Intact- FAIR	BLUE	CR	107	FIRST	GAS	B	Negative	0.05
327	PAINT	DOOR	WOOD	A	Not Intact- FAIR	BLUE	CR	107	FIRST	GAS	B	Negative	-0.31
328	PAINT	DOOR C	WOOD	A	Not Intact-POOR	BLUE	CR	107	FIRST	GAS	B	Negative	-0.3
329	PAINT	DOOR C	WOOD	A	Not Intact- FAIR	PINK	CR	107	FIRST	GAS	B	Negative	0.19
330	PAINT	DOOR	WOOD	A	Not Intact- FAIR	PINK	CR	107	FIRST	GAS	B	Negative	0.06
331	PAINT	BASEBOARD	WOOD	B	Not Intact-POOR	BLACK	CR	107	FIRST	GAS	B	Negative	0.6
332	PAINT	TRIM	WOOD	B	Not Intact- FAIR	WHITE	CR	107	FIRST	GAS	B	Negative	0.12
333	PAINT	TRIM	WOOD	B	INTACT	YELLOW	CR	107	FIRST	GAS	B	Negative	0
334	PAINT	WALL	PLASTER	B	INTACT	YELLOW	CR	107	FIRST	GAS	B	Negative	0.09
335	PAINT	WALL	PLASTER	A	INTACT	YELLOW	CR	107	FIRST	GAS	B	Negative	0.05
336	PAINT	TRIM	WOOD	A	Not Intact- FAIR	WHITE	CR	107	FIRST	GAS	B	Negative	0.22
337	PAINT	WALL	PLASTER	D	Not Intact- FAIR	YELLOW	CR	107	FIRST	GAS	B	Negative	0.9
338	PAINT	WALL	PLASTER	D	INTACT	WHITE	CR	106	FIRST	GAS	B	Negative	0.3
339	PAINT	WALL	PLASTER	B	INTACT	WHITE	CR	106	FIRST	GAS	B	Negative	0
340	PAINT	WALL	PLASTER	A	INTACT	WHITE	CR	106	FIRST	GAS	B	Negative	0
		A = SOUTH		B = WEST		C = NORTH		D = EAST					

GLYNN ARCHER ELEMENTARY SCHOOL - 1302 WHITE STREET, KEY WEST, FL

Reading Nc	Type	COMPONENT	SUBSTRATE	SIDE	CONDITION	COLOR	ROOM TYPE	ROOM NUMBER	FLOOR	SITE/ADDRESS	INSPECTC	Results	PbC
341	PAINT	WALL	PLASTER	A	INTACT	WHITE	CR	106	FIRST	GAS	B	Negative	0.5
342	PAINT	DOOR	WOOD	A	Not Intact-POOR	BEIGE	CR	108	FIRST	GAS	B	Negative	-0.04
343	PAINT	DOOR C	WOOD	A	Not Intact- FAIR	BEIGE	CR	108	FIRST	GAS	B	Negative	0.08
344	PAINT	WALL	WOOD	C	Not Intact- FAIR	BEIGE	CR	108	FIRST	GAS	B	Negative	0
345	PAINT	WALL	PLASTER	A	Not Intact-POOR	BEIGE	CR	105	FIRST	GAS	B	Negative	0.01
346	PAINT	WALL	PLASTER	A	Not Intact-POOR	WHITE	CR	105	FIRST	GAS	B	Negative	0.02
347	PAINT	WALL	PLASTER	D	Not Intact- FAIR	WHITE	CR	105	FIRST	GAS	B	Negative	0.14
348	PAINT	WALL	WOOD	D	INTACT	WHITE	CR	105	FIRST	GAS	B	Negative	0.02
349	PAINT	TRIM	WOOD	C	Not Intact- FAIR	BEIGE	CR	105	FIRST	GAS	B	Negative	0.03
350	PAINT	BASEBOARD	WOOD	C	Not Intact- FAIR	BEIGE	CR	105	FIRST	GAS	B	Negative	0.7
351	PAINT	BASEBOARD	WOOD	B	INTACT	WHITE	CR	121	FIRST	GAS	B	Negative	0
352	PAINT	WAL	WOOD	B	Not Intact- FAIR	BEIGE	CR	121	FIRST	GAS	B	Negative	0.01
353	PAINT	WAL	CERAMIC TILE	C	INTACT	WHITE	CR	121A	FIRST	GAS	B	Negative	0.01
354	PAINT	DOOR	CERAMIC TILE	D	Not Intact- FAIR	WHITE	CR	121A	FIRST	GAS	B	Negative	0.12
355	PAINT	DOOR C	CERAMIC TILE	D	Not Intact- FAIR	WHITE	CR	121A	FIRST	GAS	B	Negative	0.08
356	PAINT	DOOR C	CERAMIC TILE	D	Not Intact-POOR	BLUE	BATHROOM	BOYS	FIRST	GAS	B	Negative	0
357	PAINT	WAL	PLASTER	D	Not Intact-POOR	BEIGE	BATHROOM	BOYS	FIRST	GAS	B	Negative	0.3
358	PAINT	WAL	CERAMIC TILE	B	Not Intact- FAIR	GREEN	BATHROOM	BOYS	FIRST	GAS	B	Negative	0.01
359	PAINT	FLOOR	CERAMIC TILE	B	Not Intact- FAIR	GREY	BATHROOM	BOYS	FIRST	GAS	B	Negative	0.01
360	PAINT	BASEBOARD	CERAMIC TILE	B	Not Intact- FAIR	BEIGE	BATHROOM	BOYS	FIRST	GAS	B	Positive	1.7
361	PAINT	DOOR	WOOD	D	Not Intact- FAIR	BEIGE	CR	104	FIRST	GAS	B	Negative	0.12
362	PAINT	DOOR C	WOOD	D	Not Intact-POOR	BEIGE	CR	104	FIRST	GAS	B	Negative	0.22
363	PAINT	TRIM	WOOD	D	Not Intact-POOR	BEIGE	CR	104	FIRST	GAS	B	Negative	0.11
364	PAINT	TRIM	WOOD	D	Not Intact-POOR	BEIGE	CR	104	FIRST	GAS	B	Negative	0.08
365	PAINT	WALL	PLASTER	B	INTACT	BEIGE	CR	104	FIRST	GAS	B	Negative	0.04
366	PAINT	WALL	PLASTER	A	Not Intact- FAIR	BEIGE	CR	104	FIRST	GAS	B	Negative	0.05
367	PAINT	WALL	PLASTER	A	Not Intact- FAIR	BEIGE	CR	109B	FIRST	GAS	B	Negative	0.07
368	PAINT	WALL	PLASTER	C	Not Intact- FAIR	BEIGE	CR	109B	FIRST	GAS	B	Positive	2.5
369	PAINT	WALL	PLASTER	C	Not Intact- FAIR	BEIGE	CR	109B	FIRST	GAS	B	Negative	0.9
370	PAINT	WALL	PLASTER	B	Not Intact-POOR	BEIGE	CR	109B	FIRST	GAS	B	Positive	1.6
371	PAINT	WALL	PLASTER	D	Not Intact- FAIR	BEIGE	CR	109B	FIRST	GAS	B	Negative	-0.06
372	PAINT	BASEBOARD	WOOD	B	Not Intact-POOR	BEIGE	CR	109B	FIRST	GAS	B	Negative	0.19
373	PAINT	TRIM	WOOD	A	Not Intact-POOR	BLUE	CR	109B	FIRST	GAS	B	Negative	0.13
374	PAINT	WALL	PLASTER	A	Not Intact- FAIR	BEIGE	CR	104	FIRST	GAS	B	Negative	0.21
		A = SOUTH		B = WEST		C = NORTH		D = EAST					

GLYNN ARCHER ELEMENTARY SCHOOL - 1302 WHITE STREET, KEY WEST, FL

Reading Nc	Type	COMPONENT	SUBSTRATE	SIDE	CONDITION	COLOR	ROOM TYPE	ROOM NUMBER	FLOOR	SITE/ADDRESS	INSPECTC	Results	PbC
375	PAINT	WALL	PLASTER	D	Not Intact- FAIR	BEIGE	STAIRS	E STAIRS	FIRST	GAS	B	Negative	0.5
376	PAINT	STR HAND RAI	WOOD	D	Not Intact- FAIR	BLUE	STAIRS	E STAIRS	FIRST	GAS	B	Negative	0.21
377	PAINT	STR NEWAL P(	WOOD	D	Not Intact- FAIR	BLUE	STAIRS	E STAIRS	FIRST	GAS	B	Negative	0.08
378	PAINT	CAL	WOOD	CALIBRATE	INTACT	ORANGE	STAIRS	E STAIRS	FIRST	GAS	B	Positive	1
379	SHUTTER_CAL												2.88
380	PAINT	CAL	WOOD	CALIBRATE	INTACT	ORANGE	N	N	N	GAS BLDG C	C	Positive	1.2
381	PAINT	D	WOOD	B	INTACT	BLUE	CR	113A	FIRST	GAS BLDG C	C	Negative	0.06
382	PAINT	DC	WOOD	B	Not Intact- FAIR	BLUE	CR	113A	FIRST	GAS BLDG C	C	Negative	0.26
383	PAINT	BASEBOARD	WOOD	B	Not Intact-POOR	YELLOW	CR	113A	FIRST	GAS BLDG C	C	Negative	0.03
384	PAINT	BASEBOARD	WOOD	B	Not Intact-POOR	YELLOW	CR	113A	FIRST	GAS BLDG C	C	Negative	0
385	PAINT	WALL	PLASTER	D	INTACT	YELLOW	CR	113A	FIRST	GAS BLDG C	C	Negative	0
386	PAINT	WALL	PLASTER	B	INTACT	YELLOW	CR	113A	FIRST	GAS BLDG C	C	Negative	0
387	PAINT	D	WOOD	B	INTACT	BLUE	BATHROOM	BOYS	FIRST	GAS BLDG C	C	Negative	0.03
388	PAINT	DC	WOOD	B	Not Intact-POOR	BLUE	BATHROOM	BOYS	FIRST	GAS BLDG C	C	Negative	0
389	PAINT	DC	WOOD	B	INTACT	BEIGE	BATHROOM	BOYS	FIRST	GAS BLDG C	C	Negative	0
390	PAINT	WALL	CERAMIC TILE	A	INTACT	BEIGE	BATHROOM	BOYS	FIRST	GAS BLDG C	C	Negative	0.01
391	PAINT	FLOOR	CERAMIC TILE	A	INTACT	GREY	BATHROOM	BOYS	FIRST	GAS BLDG C	C	Negative	0.01
392	PAINT	SINK	METAL	A	Not Intact- FAIR	WHITE	BATHROOM	BOYS	FIRST	GAS BLDG C	C	Positive	28.3
393	PAINT	SINK	METAL	A	Not Intact-POOR	WHITE	BATHROOM	BOYS	FIRST	GAS BLDG C	C	Positive	28.1
394	PAINT	TOILET	CERAMIC TILE	C	INTACT	WHITE	BATHROOM	BOYS	FIRST	GAS BLDG C	C	Negative	0.03
395	PAINT	D	WOOD	B	Not Intact- FAIR	BLUE	BATHROOM	134	FIRST	GAS BLDG C	C	Negative	0.09
396	PAINT	DC	WOOD	B	INTACT	BLUE	BATHROOM	134	FIRST	GAS BLDG C	C	Negative	0.07
397	PAINT	DC	WOOD	B	Not Intact- FAIR	WHITE	BATHROOM	134	FIRST	GAS BLDG C	C	Negative	0.3
398	PAINT	D	WOOD	B	Not Intact- FAIR	WHITE	BATHROOM	134	FIRST	GAS BLDG C	C	Negative	0.03
399	PAINT	DC	WOOD	B	Not Intact- FAIR	WHITE	BATHROOM	134	FIRST	GAS BLDG C	C	Negative	0.13
400	PAINT	W	CERAMIC TILE	B	Not Intact- FAIR	GREEN	BATHROOM	134	FIRST	GAS BLDG C	C	Negative	0.02
401	PAINT	W	PLASTER	A	INTACT	WHITE	BATHROOM	134	FIRST	GAS BLDG C	C	Negative	0.05
402	PAINT	SINK	CERAMIC TILE	C	INTACT	WHITE	BATHROOM	134	FIRST	GAS BLDG C	C	Negative	0.02
403	PAINT	D	WOOD	B	Not Intact-POOR	BLUE	BATHROOM	126	FIRST	GAS BLDG C	C	Negative	0.2
404	PAINT	DC	WOOD	B	Not Intact- FAIR	BLUE	BATHROOM	126	FIRST	GAS BLDG C	C	Negative	0.23
405	PAINT	DC	WOOD	B	Not Intact-POOR	BEIGE	BATHROOM	126	FIRST	GAS BLDG C	C	Negative	0.22
406	PAINT	W	PLASTER	A	Not Intact- FAIR	BEIGE	BATHROOM	126	FIRST	GAS BLDG C	C	Negative	0
407	PAINT	W	PLASTER	D	Not Intact- FAIR	BEIGE	CORR	CORR	FIRST	GAS BLDG C	C	Negative	0.02
408	PAINT	W	PLASTER	D	Not Intact- FAIR	BLUE	CORR	CORR	FIRST	GAS BLDG C	C	Negative	0.05
		A = SOUTH		B = WEST		C = NORTH		D = EAST					

GLYNN ARCHER ELEMENTARY SCHOOL - 1302 WHITE STREET, KEY WEST, FL

Reading Nc	Type	COMPONENT	SUBSTRATE	SIDE	CONDITION	COLOR	ROOM TYPE	ROOM NUMBER	FLOOR	SITE/ADDRESS	INSPECTC	Results	PbC
409	PAINT	W	PLASTER	B	Not Intact- FAIR	BLUE	CORR	CORR	FIRST	GAS BLDG C	C	Negative	0.06
410	PAINT	W	PLASTER	B	Not Intact- FAIR	BEIGE	CORR	CORR	FIRST	GAS BLDG C	C	Negative	0
411	PAINT	D	WOOD	B	Not Intact- FAIR	BLUE	CR	111	FIRST	GAS BLDG C	C	Negative	0.04
412	PAINT	DC	WOOD	B	Not Intact-POOR	BLUE	CR	111	FIRST	GAS BLDG C	C	Negative	0.01
413	PAINT	DC	WOOD	B	Not Intact-POOR	YELLOW	CR	111	FIRST	GAS BLDG C	C	Negative	0.06
414	PAINT	W	PLASTER	B	Not Intact- FAIR	WHITE	CR	111	FIRST	GAS BLDG C	C	Negative	0.1
415	PAINT	W	PLASTER	A	Not Intact- FAIR	WHITE	CR	111	FIRST	GAS BLDG C	C	Negative	0.05
416	PAINT	W	PLASTER	D	Not Intact-POOR	WHITE	CR	111	FIRST	GAS BLDG C	C	Negative	0.05
417	PAINT	TRIM	WOOD	D	Not Intact- FAIR	WHITE	CR	111	FIRST	GAS BLDG C	C	Negative	0.02
418	PAINT	CBNT FRONT	WOOD	C	Not Intact- FAIR	BEIGE	CR	111	FIRST	GAS BLDG C	C	Negative	0.08
419	PAINT	TRIM	WOOD	B	Not Intact- FAIR	BEIGE	CR	111	FIRST	GAS BLDG C	C	Negative	0.05
420	PAINT	TRIM	WOOD	B	Not Intact- FAIR	BEIGE	CR	111	FIRST	GAS BLDG C	C	Negative	0.06
421	PAINT	FLOOR	CERAMIC TILE	D	INTACT	WHITE	CR	111	FIRST	GAS BLDG C	C	Negative	0.09
422	PAINT	SINK	METAL	A	INTACT	WHITE	BATHROOM	111A	FIRST	GAS BLDG C	C	Negative	0.01
423	PAINT	D	WOOD	D	Not Intact- FAIR	BLUE	CR	113C	FIRST	GAS BLDG C	C	Negative	0
424	PAINT	DC	WOOD	D	Not Intact-POOR	BLUE	CR	113C	FIRST	GAS BLDG C	C	Negative	0
425	PAINT	DC	WOOD	D	Not Intact-POOR	GREEN	CR	113C	FIRST	GAS BLDG C	C	Negative	0.4
426	PAINT	BASEBOARD	WOOD	D	Not Intact-POOR	BLACK	CR	113C	FIRST	GAS BLDG C	C	Negative	0.18
427	PAINT	W	PLASTER	D	Not Intact- FAIR	GREEN	CR	113C	FIRST	GAS BLDG C	C	Negative	0.02
428	PAINT	W	PLASTER	C	Not Intact- FAIR	GREEN	CR	113C	FIRST	GAS BLDG C	C	Negative	0
429	PAINT	W	PLASTER	B	Not Intact- FAIR	GREEN	CR	113C	FIRST	GAS BLDG C	C	Negative	0
430	PAINT	WS	CERAMIC TILE	B	INTACT	RED	CR	113C	FIRST	GAS BLDG C	C	Negative	0.15
431	PAINT	WS	WOOD	B	Not Intact-POOR	RED	CR	113C	FIRST	GAS BLDG C	C	Negative	0
432	PAINT	WS	DRYWALL	A	Not Intact- FAIR	GREEN	CR	113C	FIRST	GAS BLDG C	C	Negative	0
433	PAINT	D	WOOD	A	Not Intact- FAIR	BLUE	CR	114	FIRST	GAS BLDG C	C	Negative	0.04
434	PAINT	DC	WOOD	A	INTACT	BLUE	CR	114	FIRST	GAS BLDG C	C	Negative	0.16
435	PAINT	DC	WOOD	D	INTACT	GREY	CR	114	FIRST	GAS BLDG C	C	Negative	0.06
436	PAINT	W	PLASTER	D	INTACT	BEIGE	CR	114	FIRST	GAS BLDG C	C	Negative	0.01
437	PAINT	W	PLASTER	C	INTACT	BEIGE	CR	114	FIRST	GAS BLDG C	C	Negative	0
438	PAINT	W	PLASTER	A	Not Intact- FAIR	BEIGE	CR	114	FIRST	GAS BLDG C	C	Negative	0
439	PAINT	D	WOOD	D	Not Intact-POOR	BLUE	CR	114B	FIRST	GAS BLDG C	C	Negative	0.03
440	PAINT	DC	WOOD	D	Not Intact-POOR	BLUE	CR	114B	FIRST	GAS BLDG C	C	Negative	0.09
441	PAINT	WF	WOOD	A	Not Intact- FAIR	GREY	CR	114B	FIRST	GAS BLDG C	C	Negative	0.05
442	PAINT	D	WOOD	B	Not Intact- FAIR	BLUE	CR	112	FIRST	GAS BLDG C	C	Negative	0.04
		A = SOUTH		B = WEST		C = NORTH		D = EAST					

GLYNN ARCHER ELEMENTARY SCHOOL - 1302 WHITE STREET, KEY WEST, FL

Reading Nc	Type	COMPONENT	SUBSTRATE	SIDE	CONDITION	COLOR	ROOM TYPE	ROOM NUMBER	FLOOR	SITE/ADDRESS	INSPECTC	Results	PbC
443	PAINT	DC	WOOD	B	Not Intact- FAIR	BLUE	CR	112	FIRST	GAS BLDG C	C	Negative	0.11
444	PAINT	BASEBOARD	WOOD	B	Not Intact- FAIR	BLACK	CR	112	FIRST	GAS BLDG C	C	Negative	0.2
445	PAINT	TRIM	WOOD	A	Not Intact- FAIR	BEIGE	CR	112	FIRST	GAS BLDG C	C	Negative	0.07
446	PAINT	TRIM	WOOD	D	INTACT	BEIGE	CR	112	FIRST	GAS BLDG C	C	Negative	0.01
447	PAINT	W	PLASTER	D	Not Intact- FAIR	BEIGE	CR	112	FIRST	GAS BLDG C	C	Negative	0.4
448	PAINT	D	WOOD	C	INTACT	BLUE	ST	115A	FIRST	GAS BLDG C	C	Negative	0.05
449	PAINT	DC	WOOD	C	Not Intact- FAIR	BLUE	ST	115A	FIRST	GAS BLDG C	C	Negative	0.17
450	PAINT	BASEBOARD	WOOD	B	Not Intact- FAIR	RED	ST	115A	FIRST	GAS BLDG C	C	Negative	0.01
451	PAINT	BASEBOARD	CERAMIC TILE	B	Not Intact- FAIR	RED	ST	115A	FIRST	GAS BLDG C	C	Negative	0.01
452	PAINT	W	PLASTER	B	Not Intact- FAIR	BEIGE	ST	115A	FIRST	GAS BLDG C	C	Negative	0.09
453	PAINT	CBNT FRONT	WOOD	D	INTACT	BLUE	ST	115A	FIRST	GAS BLDG C	C	Negative	0.03
454	PAINT	D	WOOD	A	Not Intact- FAIR	BLUE	ST	115C	FIRST	GAS BLDG C	C	Negative	0.19
455	PAINT	DC	WOOD	A	Not Intact- FAIR	BLUE	ST	115C	FIRST	GAS BLDG C	C	Negative	0.05
456	PAINT	DC	WOOD	A	Not Intact- FAIR	GREEN	ST	115C	FIRST	GAS BLDG C	C	Negative	0.4
457	PAINT	TRIM	WOOD	A	Not Intact- FAIR	GREEN	ST	115C	FIRST	GAS BLDG C	C	Negative	0.06
458	PAINT	W	PLASTER	A	INTACT	WHITE	ST	115C	FIRST	GAS BLDG C	C	Negative	0.13
459	PAINT	W	PLASTER	C	INTACT	WHITE	ST	115C	FIRST	GAS BLDG C	C	Negative	0.1
460	PAINT	BASEBOARD	CERAMIC TILE	A	Not Intact-POOR	WHITE	ST	115C	FIRST	GAS BLDG C	C	Negative	0.02
461	PAINT	W	CERAMIC TILE	C	Not Intact- FAIR	WHITE	CAF KITCH	136	FIRST	GAS BLDG C	C	Negative	0.21
462	PAINT	W	PLASTER	C	INTACT	BEIGE	CAF KITCH	136	FIRST	GAS BLDG C	C	Negative	0.05
463	PAINT	W	PLASTER	B	Not Intact-POOR	BEIGE	CAF KITCH	136	FIRST	GAS BLDG C	C	Negative	0.26
464	PAINT	BASEBOARD	WOOD	C	Not Intact-POOR	BEIGE	CAF KITCH	136	FIRST	GAS BLDG C	C	Negative	0.08
465	PAINT	D	WOOD	C	Not Intact- FAIR	BEIGE	CAF KITCH	136	FIRST	GAS BLDG C	C	Negative	0.2
466	PAINT	DC	WOOD	C	Not Intact-POOR	BEIGE	CAF KITCH	136	FIRST	GAS BLDG C	C	Negative	0.2
467	PAINT	DC	WOOD	C	Not Intact-POOR	BEIGE	CAF KITCH	136	FIRST	GAS BLDG C	C	Negative	0.23
468	PAINT	W	CERAMIC TILE	C	Not Intact- FAIR	GREEN	CAF KITCH	136B	FIRST	GAS BLDG C	C	Negative	0.03
469	PAINT	D	WOOD	A	Not Intact- FAIR	PINK	CAF KITCH	136B	FIRST	GAS BLDG C	C	Negative	0.03
470	PAINT	DC	WOOD	A	Not Intact-POOR	PINK	CAF KITCH	136B	FIRST	GAS BLDG C	C	Negative	0.05
471	PAINT	W	PLASTER	A	Not Intact- FAIR	WHITE	CAF KITCH	136B	FIRST	GAS BLDG C	C	Negative	0.1
472	PAINT	DC	WOOD	D	Not Intact- FAIR	WHITE	CAF KITCH	136B	FIRST	GAS BLDG C	C	Negative	0.3
473	PAINT	D	WOOD	D	Not Intact- FAIR	WHITE	CAF KITCH	136B	FIRST	GAS BLDG C	C	Negative	0.01
474	PAINT	BASEBOARD	WOOD	A	Not Intact-POOR	WHITE	CAF KITCH	136B	FIRST	GAS BLDG C	C	Negative	0
475	PAINT	DF	WOOD	C	Not Intact- FAIR	BLUE	CORR	CORR	FIRST	GAS BLDG C	C	Negative	0.04
476	PAINT	W	PLASTER	B	Not Intact- FAIR	BLUE	CORR	CORR	FIRST	GAS BLDG C	C	Negative	0.09
		A = SOUTH		B = WEST		C = NORTH		D = EAST					

GLYNN ARCHER ELEMENTARY SCHOOL - 1302 WHITE STREET, KEY WEST, FL

Reading Nc	Type	COMPONENT	SUBSTRATE	SIDE	CONDITION	COLOR	ROOM TYPE	ROOM NUMBER	FLOOR	SITE/ADDRESS	INSPECTC	Results	PbC
477	PAINT	W	STUCCO	C	Not Intact- FAIR	YELLOW	EXTERIOR	N	FIRST	GAS BLDG C	C	Negative	0.06
478	PAINT	W	STUCCO	C	Not Intact- FAIR	YELLOW	EXTERIOR	N	FIRST	GAS BLDG C	C	Negative	0.05
479	PAINT	W	STUCCO	C	Not Intact-POOR	YELLOW	EXTERIOR	N	FIRST	GAS BLDG C	C	Negative	0.18
480	PAINT	RISER	METAL	C	Not Intact- FAIR	YELLOW	EXTERIOR	N	FIRST	GAS BLDG C	C	Negative	-0.4
481	PAINT	CONDUIT	METAL	C	Not Intact- FAIR	YELLOW	EXTERIOR	N	FIRST	GAS BLDG C	C	Negative	0
482	PAINT	BRACKET	METAL	C	Not Intact-POOR	YELLOW	EXTERIOR	N	FIRST	GAS BLDG C	C	Negative	0
483	PAINT	HEADER	WOOD	C	Not Intact-POOR	WHITE	EXTERIOR	N	FIRST	GAS BLDG C	C	Negative	0
484	PAINT	W	STUCCO	C	Not Intact- FAIR	YELLOW	EXTERIOR	N	FIRST	GAS BLDG C	C	Negative	0.5
485	PAINT	W	STUCCO	C	Not Intact-POOR	YELLOW	EXTERIOR	N	FIRST	GAS BLDG C	C	Negative	0
486	PAINT	W	STUCCO	A	Not Intact-POOR	YELLOW	EXTERIOR	N	FIRST	GAS BLDG C	C	Negative	0.01
487	PAINT	W	STUCCO	A	Not Intact-POOR	YELLOW	EXTERIOR	N	FIRST	GAS BLDG C	C	Negative	0
488	PAINT	D	WOOD	A	Not Intact- FAIR	GREEN	EXTERIOR	N	FIRST	GAS BLDG C	C	Negative	0
489	PAINT	DC	WOOD	A	Not Intact-POOR	GREEN	EXTERIOR	N	FIRST	GAS BLDG C	C	Negative	0.16
490	PAINT	DC	WOOD	C	Not Intact-POOR	GREEN	EXTERIOR	N	FIRST	GAS BLDG B	B	Negative	0.16
491	PAINT	D	WOOD	C	Not Intact- FAIR	GREEN	EXTERIOR	N	FIRST	GAS BLDG B	B	Negative	0
492	PAINT	W	STUCCO	C	Not Intact- FAIR	BEIGE	EXTERIOR	N	FIRST	GAS BLDG B	B	Positive	1.5
493	PAINT	W	STUCCO	C	Not Intact- FAIR	BEIGE	EXTERIOR	N	FIRST	GAS BLDG B	B	Positive	1.2
494	PAINT	W	STUCCO	C	Not Intact- FAIR	BEIGE	EXTERIOR	N	FIRST	GAS BLDG B	B	Negative	0.13
495	PAINT	W	STUCCO	C	Not Intact- FAIR	BEIGE	EXTERIOR	N	FIRST	GAS BLDG B	B	Positive	1.6
496	PAINT	W SMOOTH	STUCCO	D	Not Intact- FAIR	BEIGE	EXTERIOR	N	FIRST	GAS BLDG B	B	Negative	0.3
497	PAINT	W	STUCCO	A	Not Intact- FAIR	BEIGE	EXTERIOR	N	FIRST	GAS BLDG B	B	Negative	0.08
498	PAINT	W	STUCCO	A	Not Intact- FAIR	BEIGE	EXTERIOR	N	FIRST	GAS BLDG B	B	Negative	0
499	PAINT	WS	CONCRETE	A	Not Intact-POOR	BEIGE	EXTERIOR	N	FIRST	GAS BLDG B	B	Negative	0.02
500	PAINT	WS	STUCCO	A	Not Intact- FAIR	BEIGE	EXTERIOR	N	FIRST	GAS BLDG B	B	Negative	0.06
501	PAINT	W	STUCCO	A	Not Intact- FAIR	BEIGE	EXTERIOR	N	FIRST	GAS BLDG B	B	Negative	0.19
502	PAINT	COLUMN	STUCCO	A	Not Intact-POOR	WHITE	EXTERIOR	N	FIRST	GAS BLDG B	B	Negative	0.08
503	PAINT	L	STUCCO	A	Not Intact- FAIR	WHITE	EXTERIOR	N	FIRST	GAS BLDG B	B	Negative	0.16
504	PAINT	D	WOOD	B	Not Intact-POOR	GREEN	EXTERIOR	N	FIRST	GAS BLDG AUD	AUD	Positive	4.4
505	PAINT	DC	WOOD	B	Not Intact-POOR	GREEN	EXTERIOR	N	FIRST	GAS BLDG AUD	AUD	Positive	5.8
506	PAINT	COLUMN	CONCRETE	B	Not Intact- FAIR	WHITE	EXTERIOR	N	FIRST	GAS BLDG AUD	AUD	Negative	0.4
507	PAINT	TRIM	CONCRETE	B	Not Intact- FAIR	WHITE	EXTERIOR	N	FIRST	GAS BLDG AUD	AUD	Negative	0.3
508	PAINT	L	CONCRETE	B	Not Intact- FAIR	WHITE	EXTERIOR	N	FIRST	GAS BLDG AUD	AUD	Negative	0.24
509	PAINT	W	STUCCO	B	Not Intact- FAIR	BEIGE	EXTERIOR	N	FIRST	GAS BLDG AUD	AUD	Negative	0.01
510	PAINT	W	STUCCO	B	Not Intact- FAIR	BEIGE	EXTERIOR	N	FIRST	GAS BLDG AUD	AUD	Positive	1
		A = SOUTH		B = WEST		C = NORTH		D = EAST					

GLYNN ARCHER ELEMENTARY SCHOOL - 1302 WHITE STREET, KEY WEST, FL

Reading Nc	Type	COMPONENT	SUBSTRATE	SIDE	CONDITION	COLOR	ROOM TYPE	ROOM NUMBER	FLOOR	SITE/ADDRESS	INSPECTC	Results	PbC
511	PAINT	W	STUCCO	B	Not Intact- FAIR	BEIGE	EXTERIOR	N	FIRST	GAS BLDG AUD	AUD	Negative	0.4
512	PAINT	W	WOOD	C	Not Intact-POOR	BEIGE	EXTERIOR	ST	FIRST	GAS BLDG AUD	AUD	Positive	1.1
513	PAINT	W	STUCCO	C	Not Intact- FAIR	BEIGE	EXTERIOR	ST	FIRST	GAS BLDG AUD	AUD	Negative	0.08
514	PAINT	W	STUCCO	C	Not Intact- FAIR	BEIGE	EXTERIOR	ST	FIRST	GAS BLDG AUD	AUD	Negative	0.09
515	PAINT	W	STUCCO	C	Not Intact- FAIR	BEIGE	EXTERIOR	ST	FIRST	GAS BLDG AUD	AUD	Negative	0.08
516	PAINT	W	STUCCO	C	Not Intact- FAIR	BEIGE	EXTERIOR	ST	FIRST	GAS BLDG AUD	AUD	Negative	0.01
517	PAINT	W	STUCCO	C	Not Intact- FAIR	BEIGE	EXTERIOR	ST	FIRST	GAS BLDG AUD	AUD	Negative	0.5
518	PAINT	COLUMN	STUCCO	D	Not Intact- FAIR	WHITE	EXTERIOR	ST	FIRST	GAS BLDG AUD	AUD	Negative	0.1
519	PAINT	COLUMN	CONCRETE	D	Not Intact- FAIR	WHITE	EXTERIOR	ST	FIRST	GAS BLDG AUD	AUD	Negative	0.16
520	PAINT	FLOOR	CONCRETE	D	Not Intact- FAIR	GREY	EXTERIOR	ST	FIRST	GAS BLDG AUD	AUD	Negative	0.02
521	PAINT	D	WOOD	D	Not Intact-POOR	GREEN	EXTERIOR	ST	FIRST	GAS BLDG AUD	AUD	Negative	0.29
522	PAINT	DC	WOOD	D	Not Intact-POOR	GREEN	EXTERIOR	ST	FIRST	GAS BLDG AUD	AUD	Positive	1.8
523	PAINT	D	WOOD	C	Not Intact-POOR	GREEN	EXTERIOR	ST	FIRST	GAS BLDG A	A	Positive	8.4
524	PAINT	DC	WOOD	C	Not Intact-POOR	GREEN	EXTERIOR	ST	FIRST	GAS BLDG A	A	Positive	8.2
525	PAINT	D	WOOD	C	Not Intact- FAIR	BLUE	EXTERIOR	ST	FIRST	GAS BLDG A	A	Positive	8.7
526	PAINT	DC	WOOD	C	Not Intact- FAIR	BLUE	EXTERIOR	ST	FIRST	GAS BLDG A	A	Positive	5.4
527	PAINT	W	STUCCO	C	Not Intact- FAIR	BEIGE	EXTERIOR	ST	FIRST	GAS BLDG A	A	Negative	0.15
528	PAINT	W	STUCCO	C	Not Intact- FAIR	BEIGE	EXTERIOR	ST	FIRST	GAS BLDG A	A	Negative	0.05
529	PAINT	COLUMN	CONCRETE	C	Not Intact- FAIR	WHITE	EXTERIOR	ST	FIRST	GAS BLDG A	A	Negative	0.23
530	PAINT	D	WOOD	CB	Not Intact-POOR	GREEN	EXTERIOR	ST	FIRST	GAS BLDG A	A	Positive	6.7
531	PAINT	DC	WOOD	CB	Not Intact-POOR	BLUE	EXTERIOR	ST	FIRST	GAS BLDG A	A	Positive	6.9
532	PAINT	STAIRS	METAL	B	Not Intact-POOR	BEIGE	EXTERIOR	ST	FIRST	GAS BLDG A	A	Positive	1.4
533	PAINT	H RAIL	METAL	B	Not Intact-POOR	BEIGE	EXTERIOR	ST	FIRST	GAS BLDG A	A	Negative	0.13
534	PAINT	D	WOOD	B	INTACT	GREEN	EXTERIOR	ST	SECOND	GAS BLDG A	A	Negative	0
535	PAINT	DC	WOOD	B	Not Intact- FAIR	GREEN	EXTERIOR	ST	SECOND	GAS BLDG A	A	Negative	0.01
536	PAINT	W	STUCCO	B	Not Intact- FAIR	BEIGE	EXTERIOR	ST	SECOND	GAS BLDG A	A	Negative	0.09
537	PAINT	W	STUCCO	B	Not Intact- FAIR	BEIGE	EXTERIOR	ST	SECOND	GAS BLDG A	A	Negative	0.5
538	PAINT	COLUMN	STUCCO	B	Not Intact- FAIR	WHITE	EXTERIOR	ST	SECOND	GAS BLDG A	A	Negative	0.6
539	PAINT	W	STUCCO	A	Not Intact- FAIR	BEIGE	EXTERIOR	ST	FIRST	GAS BLDG A	A	Negative	0.07
540	PAINT	W	STUCCO	A	Not Intact- FAIR	WHITE	EXTERIOR	ST	FIRST	GAS BLDG A	A	Negative	0.15
541	PAINT	W	STUCCO	A	Not Intact- FAIR	BEIGE	EXTERIOR	ST	FIRST	GAS BLDG A	A	Negative	0.9
542	PAINT	COLUMN	CONCRETE	A	Not Intact- FAIR	WHITE	EXTERIOR	ST	FIRST	GAS BLDG A	A	Negative	0.22
543	PAINT	W FRAME	WOOD	A	Not Intact-POOR	GREEN	EXTERIOR	ST	FIRST	GAS BLDG A	A	Negative	0.13
544	PAINT	W SILL	WOOD	A	Not Intact-POOR	GREEN	EXTERIOR	ST	FIRST	GAS BLDG A	A	Negative	0.3
		A = SOUTH		B = WEST		C = NORTH		D = EAST					

GLYNN ARCHER ELEMENTARY SCHOOL - 1302 WHITE STREET, KEY WEST, FL

Reading Nc	Type	COMPONENT	SUBSTRATE	SIDE	CONDITION	COLOR	ROOM TYPE	ROOM NUMBER	FLOOR	SITE/ADDRESS	INSPECTC	Results	PbC
545	PAINT	DC	WOOD	A	Not Intact- FAIR	GREEN	EXTERIOR	ST	FIRST	GAS BLDG A	A	Negative	0.04
546	PAINT	D	WOOD	A	Not Intact- FAIR	GREEN	EXTERIOR	ST	FIRST	GAS BLDG A	A	Negative	0
547	PAINT	CEILING	WOOD	A	Not Intact-POOR	WHITE	EXTERIOR	ST	FIRST	GAS BLDG A	A	Negative	0.02
548	PAINT	BEAM	WOOD	A	Not Intact- FAIR	WHITE	EXTERIOR	ST	FIRST	GAS BLDG A	A	Positive	1.8
549	PAINT	CEILING F	WOOD	A	Not Intact-POOR	WHITE	EXTERIOR	ST	FIRST	GAS BLDG A	A	Negative	0.5
550	PAINT	TIGER	METAL	A	Not Intact-POOR	ORANGE	EXTERIOR	ST	FIRST	GAS BLDG A	A	Positive	2.7
551	PAINT	STEPS	CONCRETE	D	Not Intact-POOR	BEIGE	EXTERIOR	ST	FIRST	GAS BLDG A	A	Negative	0.08
552	PAINT	STAIRS	METAL	D	Not Intact-POOR	BEIGE	EXTERIOR	ST	FIRST	GAS BLDG A	A	Positive	1.7
553	PAINT	STAIRS	METAL	D	Not Intact-POOR	BEIGE	EXTERIOR	ST	FIRST	GAS BLDG C	C	Positive	5.1
554	PAINT	N	WOOD	CALIBRATE	INTACT	ORANGE						Positive	1

A = SOUTH B = WEST C = NORTH D = EAST

APPENDIX C

FIGURES

APPENDIX D

PHOTOGRAPHS

Photograph #1: Wall paint identified with LBP (XRF #15).

Photograph #2: Wall paint identified with LBP (XRF #25).

Photograph #3: Wall paint identified with LBP (XRF #28).

Photograph #4: Wall paint identified with LBP (XRF #43).

Photograph #5: Wall paint identified with LBP (XRF #39).

Photograph #6: Wall paint identified with LBP (XRF #113).

Photograph #7: Ceramic tile identified with lead during this inspection (XRF#212).

Photograph #8: Auditorium walls and columns identified with LBP during this inspection.

Photograph #9: Door and door casing identified with LBP during this inspection (XRF #182-183).

Photograph #10: Typical wood door identified with LBP during this inspection (XRF #196, 219, 220).

Photograph #11: LBP identified on wood trim during this inspection (XRF #256-257).

Photograph #12: Lead identified on ceramic baseboard (XRF # 272).

Photograph #13: LBP identified on wall during this inspection (XRF #287-288).

Photograph #14: Lead identified on beige ceramic tile (XRF #360).

Photograph #15: LBP identified on classroom wall (XRF #368).

Photograph #16: Lead identified on metal sink.

Photograph #17: LBP identified on exterior stucco

Photograph #18: LBP identified on exterior stucco

Photograph #19: LBP in poor condition identified on exterior wood shed attached to the Auditorium building (XRF #512)

Photograph #20: LBP in poor condition identified on exterior wood shed attached to the Auditorium building (XRF #512)

Photograph #21: Exterior door paint identified with LBP during this (XRF #504)

Photograph #22: Typical exterior stairwell identified with LBP during this inspection.

Photograph #23: Front entrance to Glynn R. Archer elementary school.

Photograph #24: Exterior wood beam paint identified with LBP during this inspection (XRF #548).

Photograph #25: Exterior metal tiger statue paint identified with LBP during this (XRF #548).

APPENDIX E

CERTIFICATES

United States Environmental Protection Agency

This is to certify that

EE&G Environmental Services, LLC

has fulfilled the requirements of the Toxic Substances Control Act (TSCA) Section 402, and has received certification to conduct lead-based paint activities pursuant to 40 CFR Part 745.226

In the Jurisdiction of:

Florida

This certification is valid from the date of issuance and expires September 8, 2013

FL-10142-3

Certification #

SEP 2 2 2010

Issued On

Jeaneanne M. Gettle, Chief

Pesticides and Toxic Substances Branch

United States Environmental Protection Agency

This is to certify that

Hiram Andres Aguiar

has fulfilled the requirements of the Toxic Substances Control Act (TSCA) Section 402, and has received certification to conduct lead-based paint activities pursuant to 40 CFR Part 745.226 as a:

Risk Assessor

In the Jurisdiction of:

Florida

This certification is valid from the date of issuance and expires August 1, 2014

FL-R-9781-1

Certification #

JUL 2 8 2011

Issued On

Jeaneanne M. Gettle, Chief

Pesticides and Toxic Substances Branch

United States Environmental Protection Agency

This is to certify that

Daniel Joseph Cottrell

has fulfilled the requirements of the Toxic Substances Control Act (TSCA) Section 402, and has received certification to conduct lead-based paint activities pursuant to 40 CFR Part 745.226 as a:

Risk Assessor

In the Jurisdiction of:

Florida

This certification is valid from the date of issuance and expires December 27, 2013

FL-R-10745-3

Certification #

FEB 2 - 2011

Issued On

Jeaneanne M. Gettle, Chief

Pesticides and Toxic Substances Branch

Appendix E
I&E (Radiographic Testing)

ENGINEERING & INSPECTIONS
UNLIMITED, INC.

August 17, 2012

Mr. Rick Wohlfarth, P.E.
Nutting Engineers of Florida, Inc.
1310 Neptune Drive
Boynton Beach, FL 33426

Re: Concrete Radiographic Examination &
Ground Penetrating Radar Investigation
Glynn Archer School
1300 White Street
Key West, FL

Engineering & Inspections Unlimited, Inc. performed non-destructive testing inspections, Ir 192 radiography, Cobalt 60 radiography and Ground Penetrating Radar Scans (GPR). Inspections were performed on Wednesday, August 8, 2012 through Saturday, August 11, 2012 at the Glynn Archer School at 1300 White Street, Key West, FL. The purpose of these inspections is to locate and identify the reinforcing steel in walls and columns and established their spacing in selected areas. Areas inspected were predetermined by Andy Chan, P.E. of Yolles and conveyed to us by Rick Wolfarth, P.E. from Nutting Engineering. Mike Flattery from CH2M Hill was our site contact.

W 100 – Auditorium, First Floor, South Side

A 24" wide x 48" high area was scanned on the southeast side of column 100. The GPR scans showed no steel. A 14" x 17" radiograph was taken in the middle of the area at a height of 38.5" from the floor to the top of the film. No steel was found in the radiograph.

1

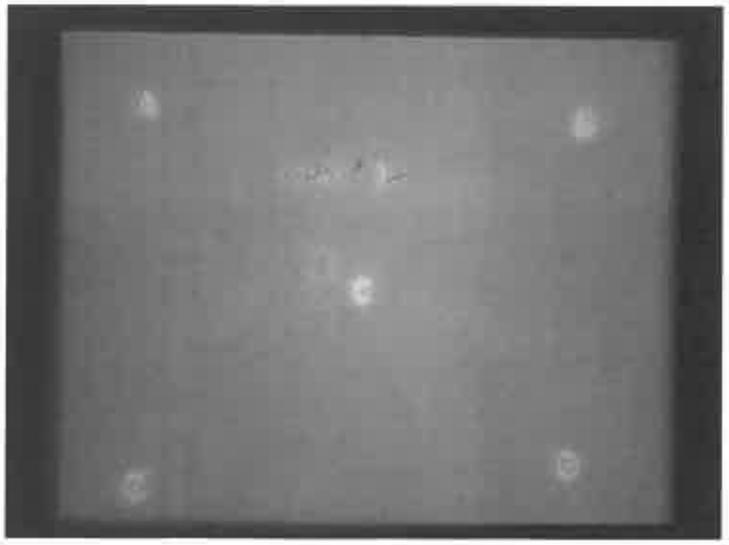

W 100 – Auditorium, First Floor, South Side

August 17, 2012

Mr. Rick Wohlfarth, P.E.
Nutting Engineers of Florida, Inc.

Page Two

W101 – Auditorium, First Floor, South Side

A 24" wide x 48" high area was scanned on the southwest side of column 100. The GPR scans showed no steel. A 14" x 17" radiograph was taken in the middle of the area at a height of 47" from the floor to the top of the film. No steel was found in the radiograph.

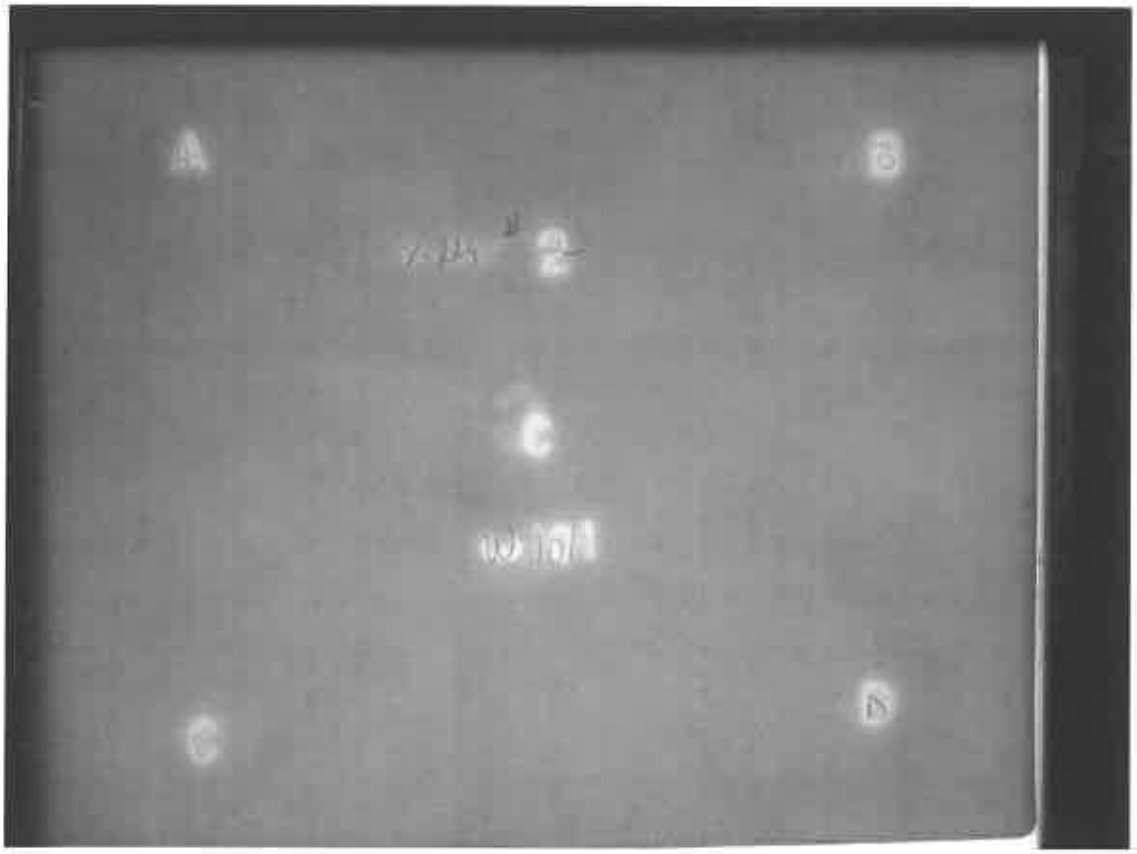

W101 – Auditorium, First Floor, South Side – X-Ray # 2

August 17, 2012

Mr. Rick Wohlfarth, P.E.
Nutting Engineers of Florida, Inc.

Page Three

W102 – Auditorium, First Floor, North Side

A 24" wide x 48" high area was scanned on the west side of column 101. The GPR scans showed indications both vertical and horizontal. A 14" x 17" radiograph was taken at the intersecting points of the GPR indications at a height of 32" from the floor to the top of the film. No steel was found in the radiograph.

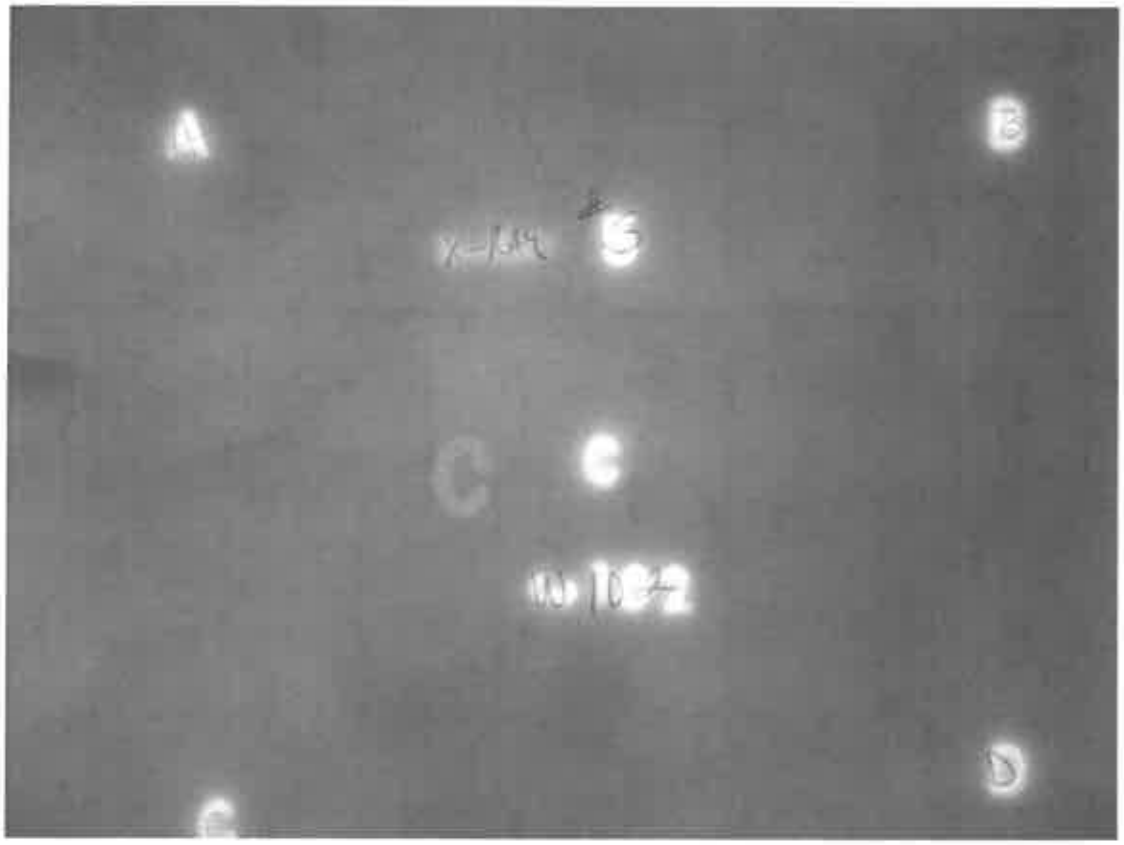

W 102 – Auditorium – First Floor – North Side – X-Ray # 5

August 17, 2012

Mr. Rick Wohlfarth, P.E.
Nutting Engineers of Florida, Inc.

Page Four

W103 – Auditorium, First Floor, North Side

A 24" wide x 48" high area was scanned on the east side of column 101. The GPR scans showed indications both vertical and horizontal. A 14" x 17" radiograph was taken at the intersecting points of the GPR indications at a height of 44" from the floor to the top of the film. The radiograph showed the wall to be made of wood lathing and plaster. The radiograph confirmed that the GPR indications were a pattern of nail heads.

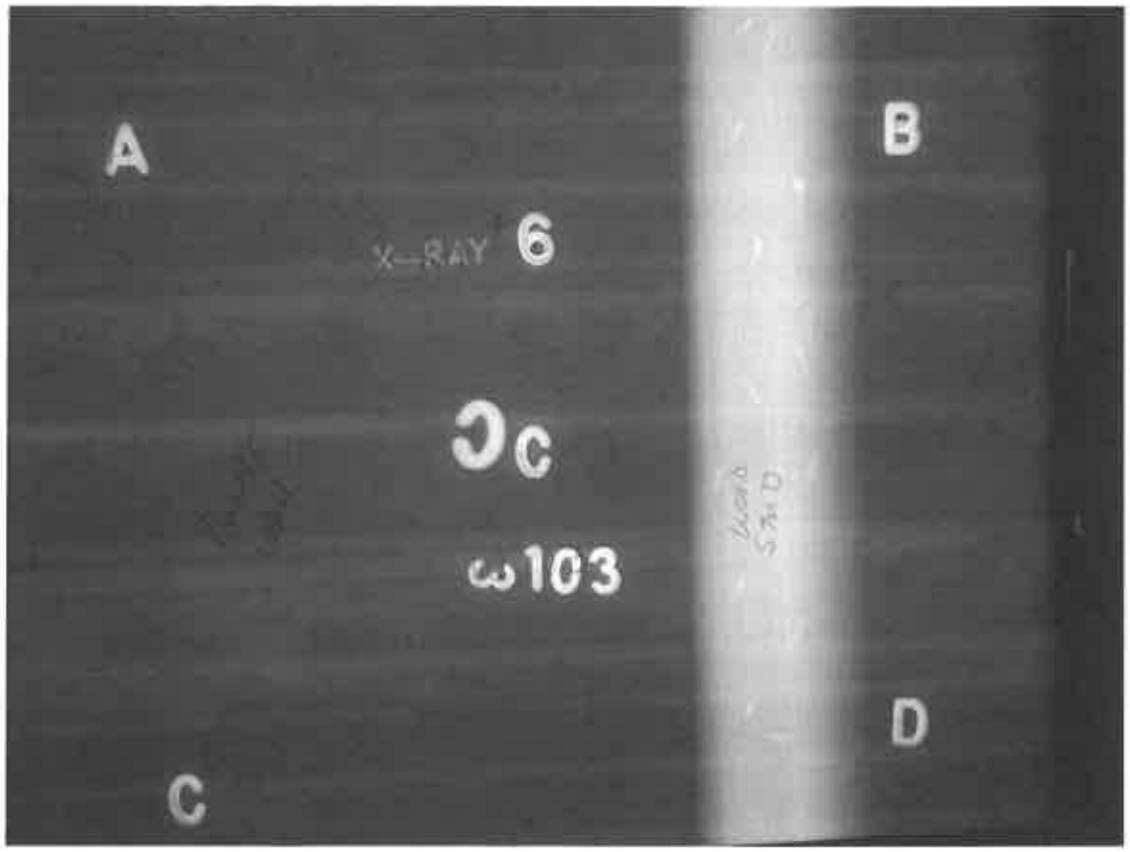

W 103 – Auditorium, First Floor – North Side – East Side Column 101 X-Ray # 6

August 17, 2012

Mr. Rick Wohlfarth, P.E.
Nutting Engineers of Florida, Inc.

Page Five

W 104 R – A - Wing, First Floor, Northeast Corner

This area was shifted to the opposite corner due to obstructions.
A 2'high x 3' wide area was scanned southeast wall. The GPR scans showed two overlapping vertical bars at an approximate depth of 6". A 14" x 17" radiograph was taken at a height of 40" from the floor to the top of the film. The bars are deformed rebar and are estimated at 15/16" in diameter.

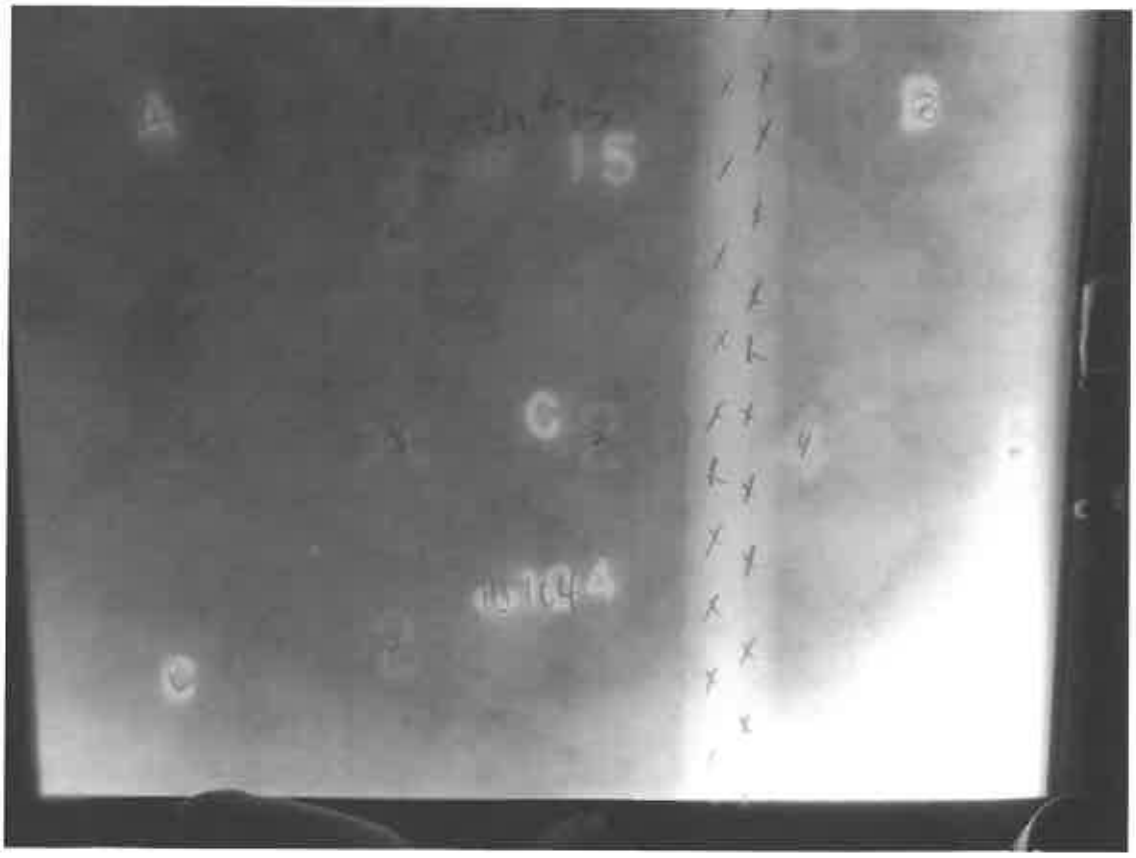

W 104 R – A - Wing, First Floor, Northeast Corner – X-Ray # 15

August 17, 2012

Mr. Rick Wohlfarth, P.E.
Nutting Engineers of Florida, Inc.

Page Six

W 105 – B - Wing, First Floor, Southeast Corner

A L-shaped area of 17" high x 4' wide x 38" high was scanned. The GPR scans showed two vertical bars spaced at 26" and one horizontal bar bisecting the bar closest to the corner. These bars were at an approximate depth of 6" to 8". A 14" x 17" radiograph was taken at the bisect. The bars are deformed rebar. The vertical bar is estimated ¼" in diameter. The horizontal bar is estimated at ½" in diameter.

A 2' wide x 4' high area was scanned. The GPR scans showed one vertical and one horizontal bar at an approximate depth of 6" to 8". A 14" x 17" radiograph was taken at the bisect. The bars are deformed rebar. The vertical bar is estimated ¼" in diameter. The horizontal bar is estimated at ½" in diameter.

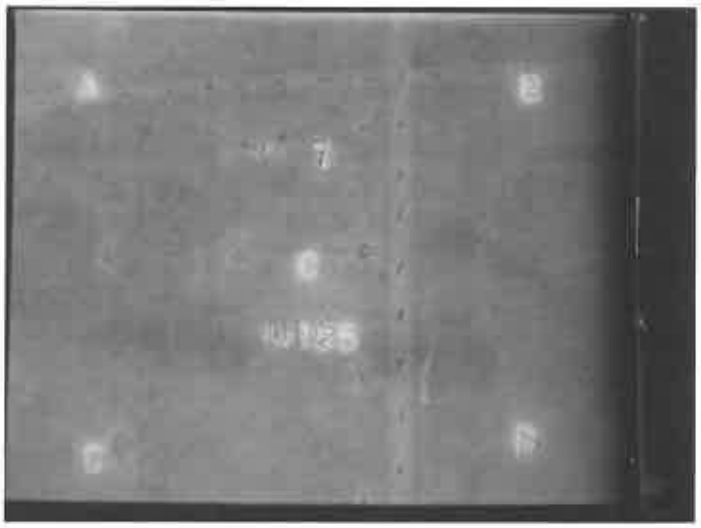

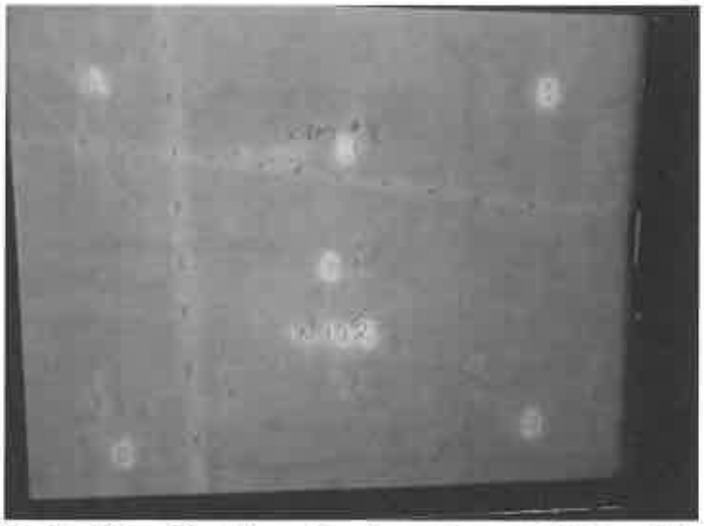

W 105 – B - Wing, First Floor, Southeast Corner – X-Rays # 7 & # 8

August 17, 2012

Mr. Rick Wohlfarth, P.E.
Nutting Engineers of Florida, Inc.

Page Seven

W 106 R – B - Wing, First Floor, Southeast Corner

This area was shifted from room 104 to room 109 due to obstructions.

A area of 36" high x 30" wide was scanned on the southeast wall of the corner. The GPR scans showed one vertical and one horizontal bar. These bars were at an approximate depth of 4" to 8". A 14" x 17" radiograph was taken at the bisect. The bars are deformed rebar. The vertical bar is estimated ½" in diameter. The horizontal bar is estimated at 5/16" in diameter.

A 2' wide x 4' high area was scanned on the northwest wall of the corner. The GPR scans showed one vertical and one horizontal bar at an approximate depth of 8" to 9". A 14" x 17" radiograph was taken at the bisect. The bars are deformed rebar. The vertical bar is estimated at ½" in diameter. The horizontal bar is estimated 5/16" diameter.

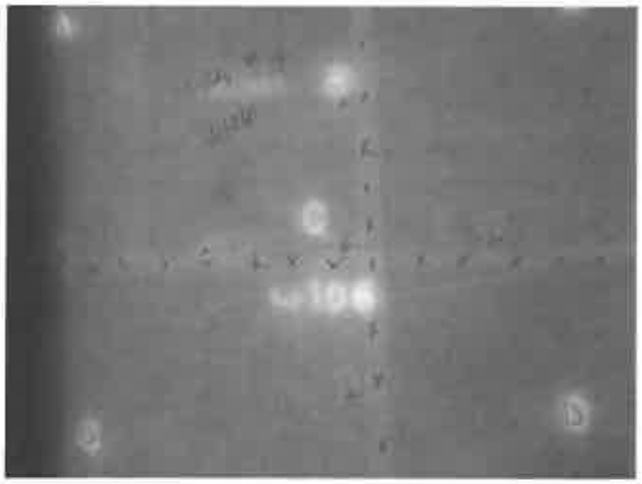

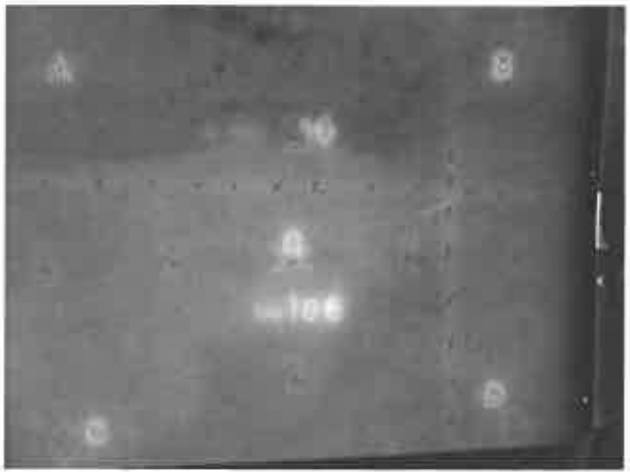

W 106 R – B - Wing, First Floor, Southeast Corner – X-Rays # 8 & # 10

W 107 Auditorium, First Floor, West Side, Backstage

A 5' high x 9' wide area was scanned. The GPR scans showed indications. Two 14" x 17" radiographs were taken at a height of 70" and 65" from the floor to the top of the film. The radiographs showed no steel bars, one radiograph shows exterior conduit.

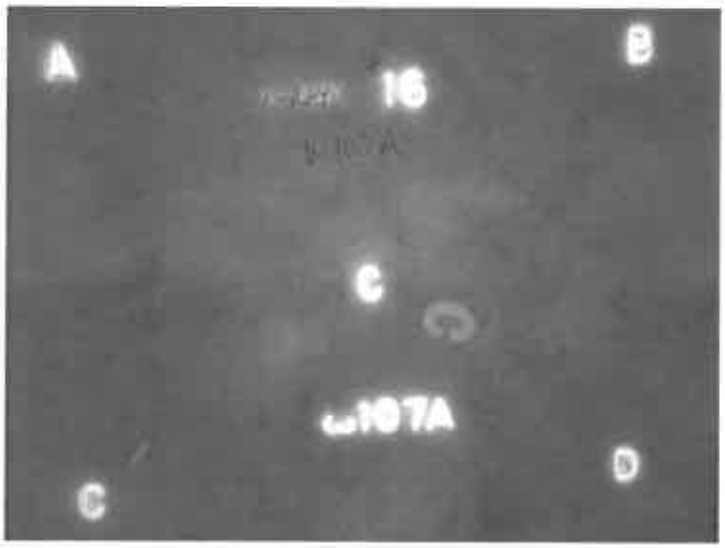

107 Auditorium, First Floor, West Side, Backstage – X-Rays # 4 & # 16

August 17, 2012

Mr. Rick Wohlfarth, P.E.
Nutting Engineers of Florida, Inc.

Page Nine

W 108 A - Wing, First Floor, Northwest Corner

A L-shaped area 6' wide x 18" high and 4'high x 3' wide were scanned on the southwest wall. The GPR scans showed three vertical indications at an approximate depth of 6" and spacing at 7". A 14" x 17" radiograph was taken at a height of 34" from the floor to the top of the film. The radiograph shows two overlapping deformed rebar, estimated at ¾" in diameter.

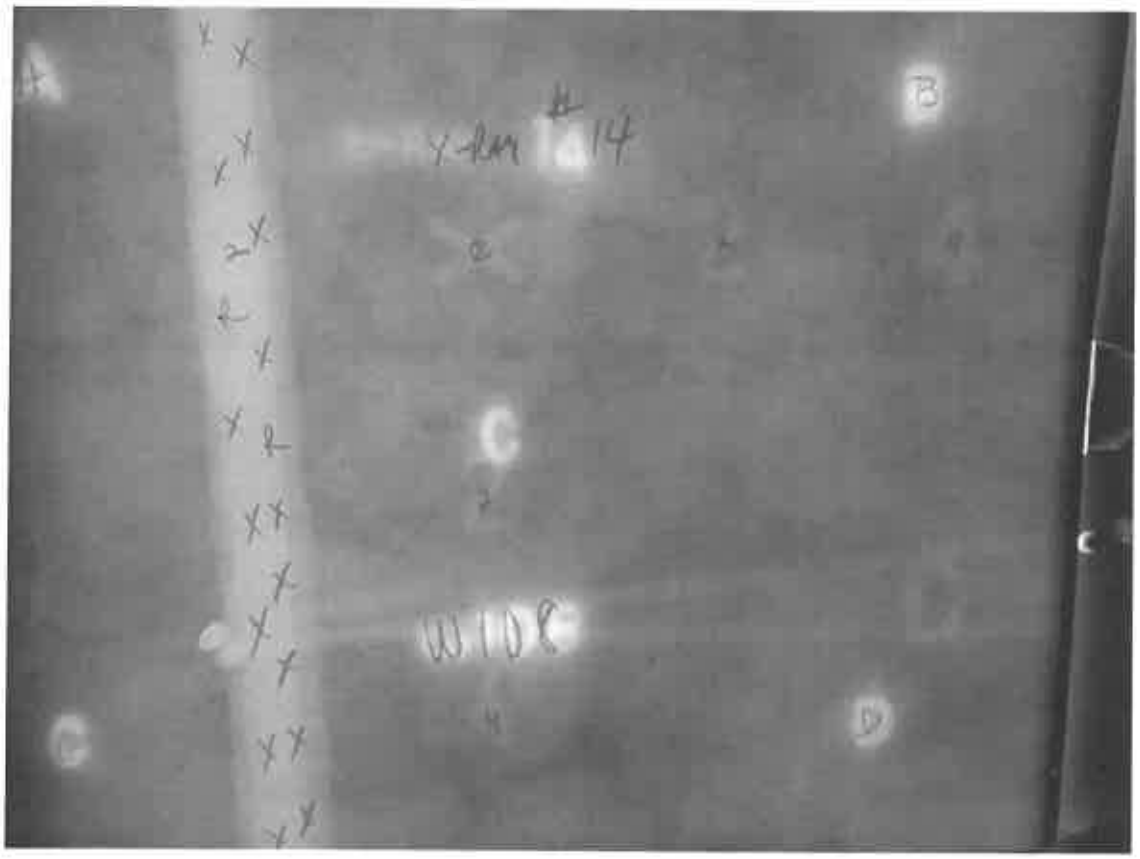

W 108 A - Wing, First Floor, Northwest Corner – X-Ray # 14

August 17, 2012

Mr. Rick Wohlfarth, P.E.
Nutting Engineers of Florida, Inc.

Page Ten

C 100 Auditorium, First Floor, South Side

A 4' high x 2'-1" wide area was scanned. The GPR scans showed vertical and horizontal indications. Two 14" x 17" radiographs were taken across the width of the column, at a height of 66.5" from the floor to the top of the film. The radiographs show two vertical, deformed rebar, at an approximate 6" depth and approximately 5" in from each side of the column. The diameter of the rebar is estimated at 1" in diameter.

The one horizontal indication is at a depth of approximately 6" at a height of 17" from the floor.

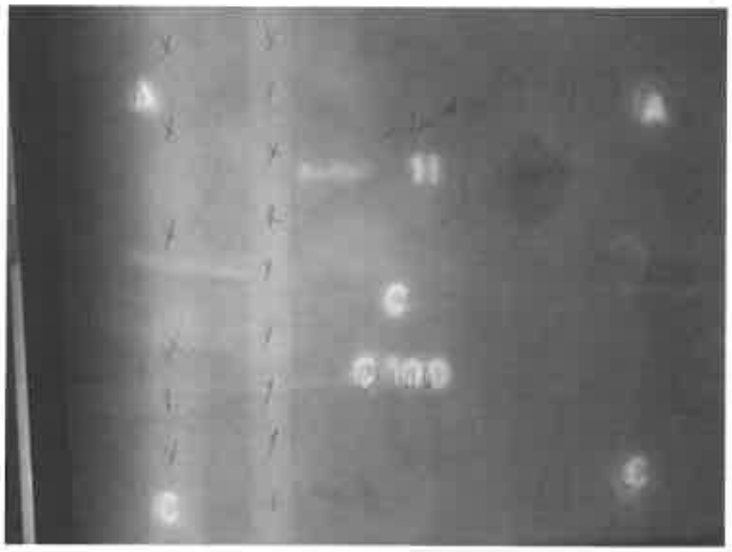

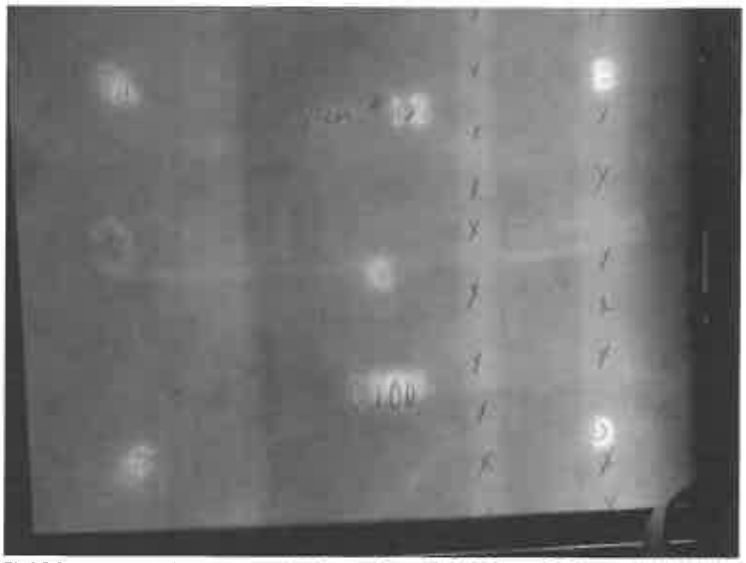

C 100 Auditorium, First Floor, South Side – X-Rays # 11 & 12

August 17, 2012

Mr. Rick Wohlfarth, P.E.
Nutting Engineers of Florida, Inc.

Page Eleven

C 101 Auditorium, First Floor, North Side

A 4' high x 2' wide area was scanned. The GPR scans showed a vertical indication. Two 14" x 17" radiographs were taken across the width of the column, at a height of 48" from the floor to the top of the film. The radiographs show two vertical, deformed rebar, at an approximate 6" depth. These rebar are side by side and approximately 5" in from the west side of the column. The diameter of the rebar is estimated at 1" in diameter.

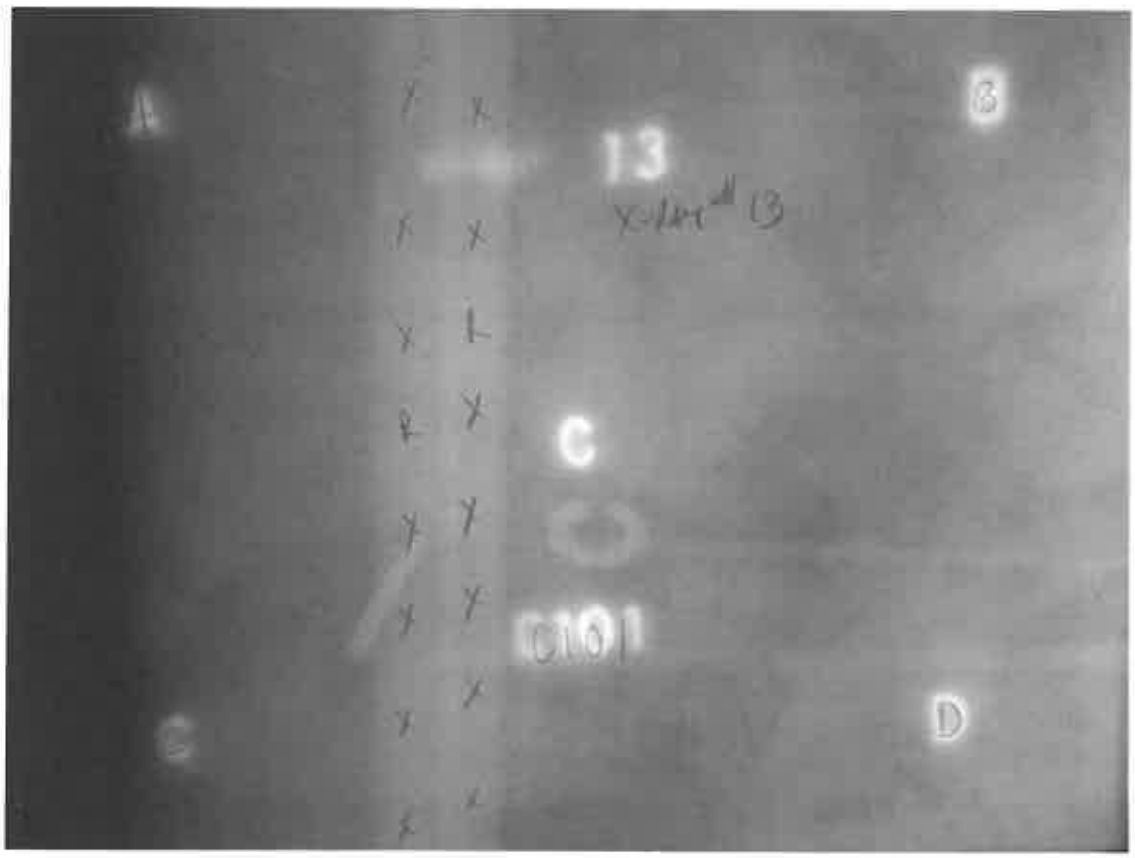

C 101 Auditorium, First Floor, North Side – X-Ray # 13

August 17, 2012

Mr. Rick Wohlfarth, P.E.
Nutting Engineers of Florida, Inc.

Page Twelve

P 1 Auditorium, First Floor, South Side, Between Windows

A 4' high x 2' wide area was scanned. The GPR scans showed two vertical indications. Two 14" x 17" radiographs were taken across the width of the column, at a height of 58" from the floor to the top of the film. The radiographs show two vertical, deformed rebar, at an approximate 3" depth. These rebar are side by side and are on center. The diameter of the rebar is estimated at ½" in diameter.

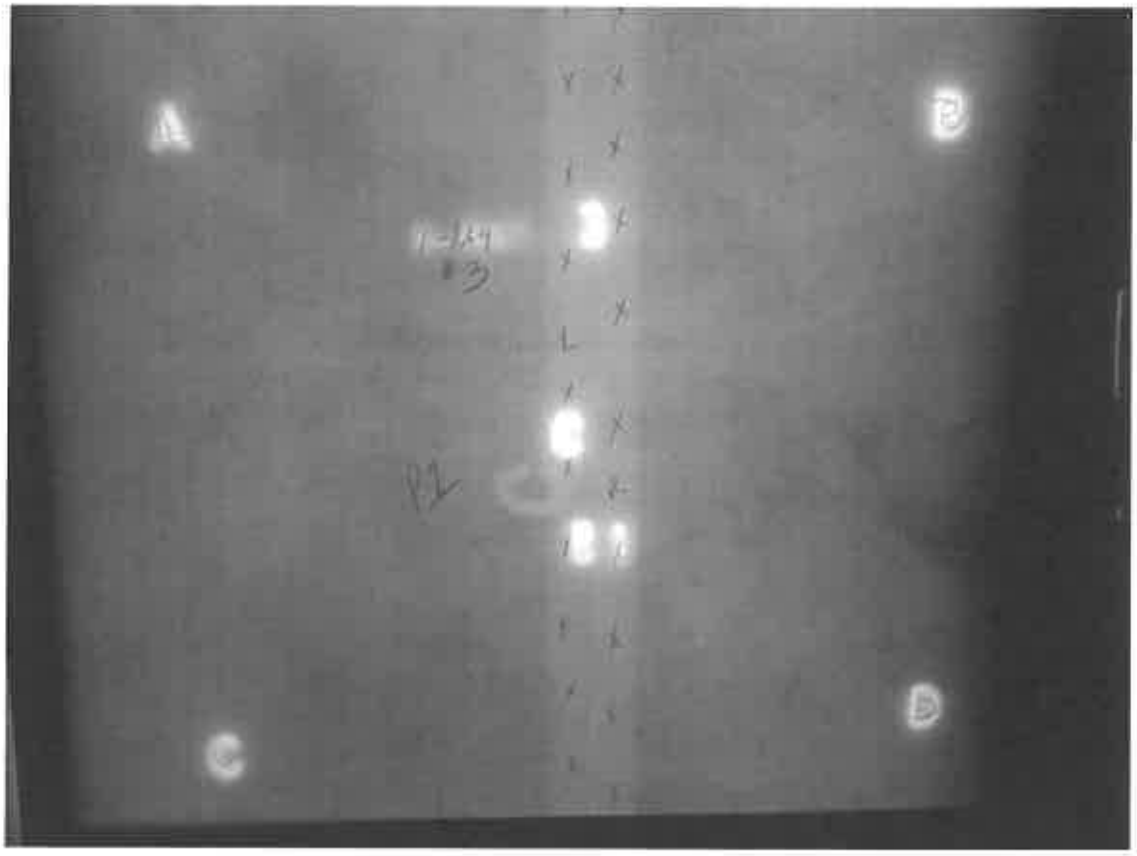

P 1 Auditorium, First Floor, South Side, Between Windows – X-Ray # 3

August 17, 2012

Mr. Rick Wohlfarth, P.E.
Nutting Engineers of Florida, Inc.

Page Thirteen

Electrical Room, West Side of Stage, West Corner

No GPR Scans were performed in the electrical room. As directed by Andy Chan, P.E., two radiographs were taken in the west corner on either wall spaced 12" apart in height. The radiographs showed no steel.

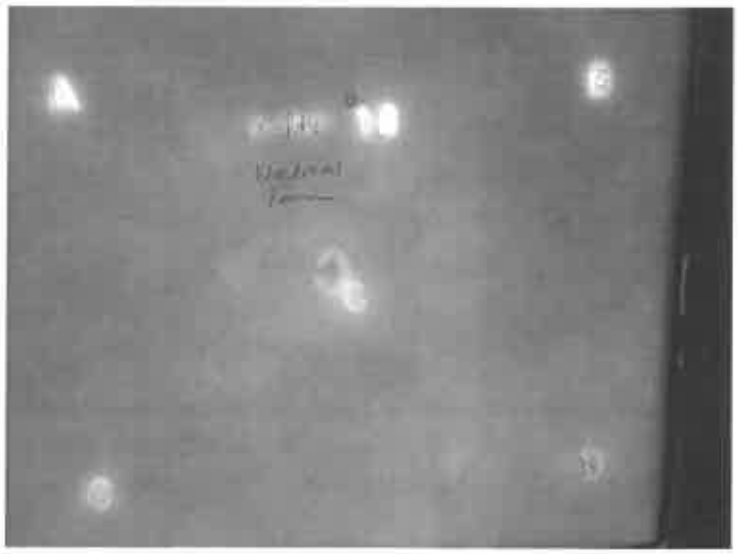

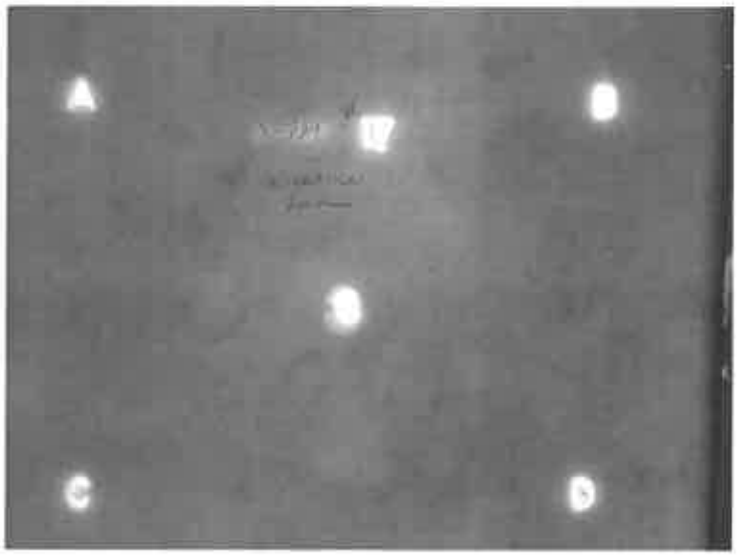

Electrical Room, West Side of Stage, West Corner – X-Ray # 17 & 18

August 17, 2012

Mr. Rick Wohlfarth, P.E.
Nutting Engineers of Florida, Inc.

Page Fourteen

W 200 – B Wing, Second Floor Southeast Corner
Scans were performed on either wall in the corner; however, without radiographic verification, and considering the amount of junk, i.e., nail heads, crimped wire and other ferrous materials that the scans picked up and radiographs verified, we cannot identify any structural steel on the second floor. Access to the second floor for radiographs was not available.

W 200 – B Wing, Second Floor Southwest Corner
Scans were performed on either wall in the corner; however, without radiographic verification, and considering the amount of junk, i.e., nail heads, crimped wire and other ferrous materials that the scans picked up and radiographs verified, we cannot identify any structural steel on the second floor. Access to the second floor for radiographs was not available.

NOMEN-CLATURE	LOCATION	NDT METHOD & AREA SIZE	X-Ray	Bar Depth	Bar Size	Note
W100	Auditorium - First Floor - South Side	GPR - (24" X 48") X-RAY - 14" X 17"	1	No Steel	N/A	
W101	Auditorium - First Floor - South Side	GPR - (24" X 48") X-RAY - 14" X 17"	2	No Steel	N/A	
W102	Auditorium -First Floor - North Side	GPR - (24" X 48") X-RAY - 14" X 17"	5	No Steel	N/A	
W103	Auditorium - First Floor - North Side	GPR - (24" X 48") X-RAY - 14" X 17"	6	No Steel	N/A	
W104 R	A Wing - First Floor - North East Corner Switched to opposite corner due to obstructions	GPR - (2' X 3') X-RAY - 14" X 17"	15	two vertical bars @ 6" depth	15/16"	slight overlap
W105	B Wing - First Floor - South East Corner	GPR - (17" x 54"") GPR (48' x 24") X-RAY - 14" X 17"	7 SE 8 NW	one vertical bar@ 6" depth one horizontal bar @ 6" depth	1/4" 1/2"	corner - both sides
W106 R	B Wing - First Floor - Southeast Corner Switched from room 104 to room 109 due to obstructions	GPR - (36" x 56") GPR (36" x 30") X-RAY - 14" X 17"	9 SE 10 NW	one vertical @ 4" depth one horizontal @ 8" depth	1/2" 5/16"	corner - both sides
W107	Auditorium - First Floor - West Side	GPR - (10'-0" X 4'-0") X-RAY - 14" X 17"	4 16	No Steel	N/A	exterior conduit on film
W108	A Wing - First Floor - North West Corner There are 2 # W103's, this area renamed W108	GPR - (6' x 18") X-RAY - 14" X 17"	14	two vertical @ 6" depth	3/4"	overlapping
C100	Auditorium - First Floor - South Side	GPR (2'-1" x 4') X-RAY 14" x 17"	11 NE 12 SW	two vertical @6 & 7" depth two vertical @6" & 7" depth	1" 1"	
C101	Auditorium - First Floor - North Side	GPR (2' x 4') X-RAY - 14" X 17"	13 SW NE	two vertical @6 & 7" depth one vertical @6" & 7" depth	1"	
W200	A Wing - Second Floor - South East Corner No access for x-ray	GPR - (10'-0" X 5'-0") X-RAY - 14" X 17"		N/A		
W201	B Wing - Second Floor - South West Corner No access for x-ray	GPR - (10'-0" X 5'-0") X-RAY - 14" X 17"		N/A		
P 1	Auditorium - First Floor - South Side - between windows	GPR (2' x 4') X-RAY 14" x 17"	3	two vertical bars @ 3" depth	1/2"	
Electrical Room	Off of Stage in Auditorium	X-RAY 14" x 17"	17 18	No Steel		

Engineering & Inspections Unlimited, Inc. appreciates this opportunity to provide your project with Nondestructive Testing Services. Should you have any questions or require additional information, Please contact us direct.

Regards,
Donna Frione

ENGINEERING & INSPECTIONS UNLIMITED, INC.

Appendix F
Cost Estimates

Cost Estimate for Rehabilitation Concept

Glynn Archer Property Condition Assessment (PCA)		CH2M HILL
Key West, Florida		7-Sep-12
REHABILITATION CONCEPT		
PROGRAM ESTIMATE - ESTIMATE DETAIL: A & B Wings, Auditorium, and New Addition		
AC Gross sf: 33,398 (existing) + 1,920 sf (new addition) = 35,318 sf Non AC SF = 4,321 (3,009 @ 1st Fl & 1,312 @ 2nd Fl) TOTAL sf = 39,639		
DIVISION	**DESCRIPTION**	**AMOUNT**
1	General Conditions	$892,059
2	Site Work	$912,382
3	Concrete	$103,320
4	Masonry	$21,000
5	Metals	$1,923,950
6	Wood Plastics	$235,000
7	Thermal & Moisture Protection	$393,388
8	Doors & Windows	$692,000
9	Finishes	$976,202
10	Specialties	$62,400
11	Equipment	$58,278
12	Furnishings	$51,000
13	Special Construction	$218,556
14	Conveying Systems	$105,000
15	Mechanical	$1,572,199
16	Electrical	$1,595,915
	SUBTOTAL	**$9,812,649**
	Gen. Liability Insurance Premium (1%)	$98,126
	Overhead & Fee (7.5%)	$743,308
	Payment & Performance Bond (2%)	$213,082
	Keys Factor (20%)	$2,173,433
	SUBTOTAL	**$13,040,598**
	Contingency (10%)	$1,304,060
	A/E fee - Design (7%)	$912,842
	A/E fee - Construction (5%)	$652,030
	FF & E: Allowance	$450,000
	PROJECT TOTAL	**$16,359,530**

Glynn Archer Property Condition Assessment (PCA)					CH2M HILL
Key West, Florida					7-Sep-12
REHABILITATION CONCEPT					
PROGRAM ESTIMATE - ESTIMATE DETAIL: A & B Wings, Auditorium, and New Addition					
AC Gross sf: 33,398 (existing) + 1,920 sf (new addition) = 35,318 sf **Non AC SF = 4,321 (3,009 @ 1st Fl & 1,312 @ 2nd Fl)** **TOTAL sf = 39,639**					
Item	**Quntity**	**Unit**	**Unit Cost**	**Total**	
Demolition					
Demolish building C	16,000	sf	$6.00	$96,000	
Selective demolition/asbestos & paint removal @ Bldg A & B	33,398	sf	$6.00	$200,388	
Site demolition	1	ls	$50,000.00	$50,000	
Exterior wall bracing	0	ls	$0.00	$0	
				Total Demolition	$346,388
Earthwork					
Prep for new slab on grade	960	sf	$2.00	$1,920	
Imported fill Footing excavation & backfill	15	cy	$20.00	$300	
Soil poisioning/termite	19,099	sf	$0.25	$4,775	
				Total Earthwork	$6,995
Dewatering					
Surface pumping	1	allow	$5,000.00	$5,000	
				Total Dewatering	$5,000
Site Utilities					
Domestic Water - new service from street	1	ls	$20,000.00	$20,000	
Fire Line - new service from street	1	ls	$30,000.00	$30,000	
Irrigation water supply - new service from street	1	ls	$10,000.00	$10,000	
Sanitary sewer - new service from street	1	ls	$25,000.00	$25,000	
Storm sewer	1	ls	$75,000.00	$75,000	
Rehab existing cistern system	1	allow	$20,000.00	$20,000	
				Total Site Utilities	$180,000
Hardscaping/Landscaping					
Landscaping	1	ls	$150,000.00	$150,000	
Bituminous paving	3,000	sy	$ 30.00	$90,000	
Concrete curb & gutter	800	lf	$ 15.00	$12,000	
Concrete sidewalks	5,000	sf	$ 5.00	$25,000	
Brick pavers	3,000	sf	$ 10.00	$30,000	
Site amenities	1	allow	$ 25,000.00	$25,000	
Site lighting	1	ls	$ 25,000.00	$25,000	
Miscellaneous	1	allow	$ 20,000.00	$20,000	
				Total Hardscaping/Landscaping	$377,000

Glynn Archer Property Condition Assessment (PCA)					CH2M HILL
Key West, Florida					7-Sep-12
REHABILITATION CONCEPT					
PROGRAM ESTIMATE - ESTIMATE DETAIL: A & B Wings, Auditorium, and New Addition					
AC Gross sf: 33,398 (existing) + 1,920 sf (new addition) = 35,318 sf **Non AC SF = 4,321 (3,009 @ 1st Fl & 1,312 @ 2nd Fl)** **TOTAL sf = 39,639**					
Item	**Quntity**	**Unit**	**Unit Cost**	**Total**	
Site Concrete					
Handicap ramps (4); 2 exterior & 2 interior	1	ls	80,000.00	$80,000	
				Total Site Concrete	$80,000
Layout					
Concrete layout	1	ls	$5,000.00	$5,000	
				Total Layout	$5,000
Concrete					
4" slab on grade	960	sf	$5.00	$4,800	
5" slab on metal deck - 2nd floor	960	sf	$6.00	$5,760	
5" slab on metal deck - roof	960	ls	$6.00	$5,760	
Concrete stairs	1	ls	$2,000.00	$2,000	
				Total Concrete	$18,320
Masonry					
8" exterior CMU	4,200	sf	$5.00	$21,000	
				Total Masonry	$21,000
Miscellaneous Metals					
Elevator separator beams	2	ea	$500.00	$1,000	
Elevator hoist beams	1	ea	$ 300.00	$300	
Elevator Pit Ladders	1	ea	$ 1,200.00	$1,200	
Louvers (6 @ 10 sf ea)	60	sf	$ 40.00	$2,400	
Cooling tower support steel	1	ls	$ 10,000.00	$10,000	
Misc. steel	1	ls	$ 5,000.00	$5,000	
				Total Miscellaneous Metals	$19,900
Structural Steel					
Structural steel frame @ 2nd floor (15#/sf)	-	tons	$ -	$0	
Structural steel frame @ roof (12#/sf)	-	tons	$ -	$0	
Floor deck	960	sf	$ 4.00	$3,840	
Roof deck	960	sf	$ 3.50	$3,360	
Tie steel frame to existing exterior walls	-	ls	$ 50,000.00	$0	
Misc. angles & channels @ deck edge	1	ls	$ 5,000.00	$5,000	
FPR System	36,150	sf	$ 50.00	$1,807,500	
Structural Connectors	3,500	ea	$21.50	$75,250	
				Total Structural Steel	$1,894,950

Glynn Archer Property Condition Assessment (PCA)					CH2M HILL
Key West, Florida					7-Sep-12
REHABILITATION CONCEPT					
PROGRAM ESTIMATE - ESTIMATE DETAIL: A & B Wings, Auditorium, and New Addition					
AC Gross sf: 33,398 (existing) + 1,920 sf (new addition) = 35,318 sf **Non AC SF = 4,321 (3,009 @ 1st Fl & 1,312 @ 2nd Fl)** **TOTAL sf = 39,639**					
Item	**Quntity**	**Unit**	**Unit Cost**	**Total**	
Metal Stairs & stair Railings					
Stair rail; single line	184	lf	25.00	$4,600	
Stair rail; picket	90	lf	50.00	$4,500	
				Total Metal Stairs & Stair Railings	$9,100
Rough Carpentry					
Interior blocking	1	ls	$20,000.00	$ 20,000	
				Total Rough Carpentry	$ 20,000
Finish Carpentry					
Interior wood base & crown	1	allow	$50,000.00	$50,000	
Miscellaneous finish carpentry	1	ls	$50,000.00	$50,000	
				Total Finish Carpentry	$100,000
Millwork					
Chamber dias	1	ls	$10,000.00	$10,000	
Miscellaneous millwork & casework	300	lf	$350.00	$105,000	
				Total Millwork	$115,000
Caulking & Waterproofing					
Exterior caulking	1	ls	$20,000.00	$20,000	
Interior caulking	1	ls	$ 25,000.00	$25,000	
Miscellaneous waterproofing	1	ls	$ 5,000.00	$5,000	
				Total Caulking & Waterproofing	$50,000
Building Insulation					
Walls and roof	45,500	sf	$2.00	$91,000	
				Total Building Insulation	$91,000
Fire stopping					
Misc. fire stopping	1	ls	$ 10,000.00	$10,000	
				Total Fire Stopping	$10,000

Glynn Archer Property Condition Assessment (PCA)					CH2M HILL
Key West, Florida					7-Sep-12
REHABILITATION CONCEPT					
PROGRAM ESTIMATE - ESTIMATE DETAIL: A & B Wings, Auditorium, and New Addition					
AC Gross sf: 33,398 (existing) + 1,920 sf (new addition) = 35,318 sf **Non AC SF = 4,321 (3,009 @ 1st Fl & 1,312 @ 2nd Fl)** **TOTAL sf = 39,639**					
Item	**Quntity**	**Unit**	**Unit Cost**	**Total**	
Roofing					
Mod. Bitumen roof and flashings	19099	sf	$12.00	$229,188	
Collector boxes & downspouts	1	ls	$10,000.00	$10,000	
Walkway pads	500	sf	$4.00	$2,000	
Overflow scuppers @ roof	6	ea	$200.00	$1,200	
				Total Roofing	$242,388
Doors, Frames, Hardware & Installation					
Single doors	62	ea	$1,500.00	$93,000	
Double doors	12	ea	$3,500.00	$42,000	
				Doors, Frames Hardware & Installation	$135,000
Windows & Storefront					
Typical Building Windows (170 ea x 36 sf)	170	ea	$3,000.00	$510,000	
Storefront sidelights	2	ea	$3,500.00	$7,000	
Lightwells	4	ea	$10,000.00	$40,000	
				Total Windows & Storefront	$557,000
Mirrors					
Mirrors @ restrooms	12	ea	$200.00	$2,400	
				Total Mirrors	$2,400
Stucco, Lath & Plaster					
Rehab existing stucco	25,000	sf	$6.00	$150,000	
Exterior plaster ceiling	4,000	sf	$6.00	$24,000	
Auditorium ceiling	4,550	sf	$15.00	$68,250	
Miscellaneous stucco	3500	sf	$6.00	$21,000	
				Total Stucco, Lath & Plaster	$171,000
Drywall					
Existing 6" wood studs, 2 layers 5/8" type X drywall	12,600	sf	$5.00	$63,000	
3 5/8" met studs, 5/8" DW 2 sides	3,200	sf	$5.00	$16,000	
1" met. Furring, 5/8" drywall	40,500	sf	$5.00	$202,500	
Double metal stud chase wall	800	sf	$8.00	$6,400	
Drywall ceilings (restrooms)	2,400	sf	$5.00	$12,000	
Acoustical tile ceilings	28,600	sf	$3.00	$85,800	
				Total Drywall	$385,700

Glynn Archer Property Condition Assessment (PCA)					CH2M HILL
Key West, Florida					7-Sep-12
REHABILITATION CONCEPT					
PROGRAM ESTIMATE - ESTIMATE DETAIL: A & B Wings, Auditorium, and New Addition					
AC Gross sf: 33,398 (existing) + 1,920 sf (new addition) = 35,318 sf **Non AC SF = 4,321 (3,009 @ 1st Fl & 1,312 @ 2nd Fl)** **TOTAL sf = 39,639**					
Item	**Quntity**	**Unit**	**Unit Cost**	**Total**	
Porcelain, Ceramic & Stone					
porcelain tile floors	12,000	sf	$20.00	$240,000	
Ceramic tile floors at restrooms	1,000	sf	$6.00	$6,000	
Ceramic tile walls at restrooms	1,000	sf	$6.00	$6,000	
				Total Porcelain, Ceramic, Stone	$246,000
Countertops					
Stone top @ restrooms	128	sf	$75.00	$9,600	
Stone backsplash @ restrooms	96	lf	$30.00	$2,880	
				Total Countertops	$12,480
Carpet and Resilient					
Carpet @ Offices and Auditorium	2,500	sy	$25.00	$ 62,500	
VCT Flooring	2,000	sf	$3.00	$ 6,000	
VCT base	250	lf	$2.00	$500	
				Total Carpet and Resilient	$ 69,000
Painting					
Paint doors and frames	72	ea	$100.00	$7,200	
Paint stucco	25,000	sf	$0.60	$15,000	
Paint @ Plaster ceilings	8,871	sf	$0.50	$4,436	
Paint drywall walls	80,000	sf	$0.35	$28,000	
Paint drywall ceilings	2,400	sf	$0.40	$960	
Paint CMU	6,144	sf	$0.60	$3,686	
Seal concrete floors	640	sf	$1.00	$640	
Miscellaneous painting	1	ls	$10,000.00	$10,000	
				Total Painting	$69,922
Acoustic Wall Panels					
Auditorium Acoustical Wall Panels	700	sf	$50.00	$35,000.00	
				Total fabric / Wallcovering / Acoustic Wall Panels	$35,000
Toilet Accessories Including Installation					
Toilet accessories@ restrooms	4	rooms	$5,000.00	$20,000	
				Total Toilet Accessories	$20,000
Fire Extinguishers					
Fire extinguishers	20	ea	$200.00	$4,000	
				Total Fire Extinguishers	$4,000
Toilet Partitions					
Regular/standard	8	ea	$ 1,500.00	$12,000	
Handicapped	4	ea	$ 2,000.00	$8,000	
Urinal screens	2	ea	$ 1,000.00	$2,000	
				Total Toilet Partitions	$22,000

Glynn Archer Property Condition Assessment (PCA)					CH2M HILL
Key West, Florida					7-Sep-12
REHABILITATION CONCEPT					
PROGRAM ESTIMATE - ESTIMATE DETAIL: A & B Wings, Auditorium, and New Addition					
AC Gross sf: 33,398 (existing) + 1,920 sf (new addition) = 35,318 sf **Non AC SF = 4,321 (3,009 @ 1st Fl & 1,312 @ 2nd Fl)** **TOTAL sf = 39,639**					
Item	**Quntity**	**Unit**	**Unit Cost**	**Total**	
Signage					
Building Exterior Signage	1	allow	$8,000.00	$8,000	
Interior Signage	1	allow	$10,000.00	$10,000	
				Total Signage	$18,000
LEED:					
Procedures & commissioning	1	ls	$20,000.00	$20,000	
				Total Equipment	$20,000
Furnishings					
Window treatments	170	win.	$300.00	$51,000	
Entry mats				$0	
				Total Furnishings	$51,000
Special Construction					
Historic Exterior Renovation	1	ls	$50,000.00	$50,000	
				Total Special Construction	$50,000
Conveying Systems					
Elevator - 2 stops	1	ea	$100,000.00	$100,000	
Cab allowance	1	ea	$5,000.00	$5,000	
				Total Conveying Systems	$105,000
Plumbing (rough)					
Plumbing Systems	35,318	sf	$6.00	$211,908	
Solar hot water system	1	ea	$ 20,000.00	$20,000	
Plumbing (finished)					
Lavatories	12	ea	$750.00	$9,000	
Wall hung lavatories	4	ea	$600.00	$2,400	
water closets	12	ea	$800.00	$9,600	
urinals	4	ea	$800.00	$3,200	
mop sinks	2	ea	$400.00	$800	
Drinking fountains	4	ea	$1,200.00	$4,800	
				Total Plumbing	$261,708

Glynn Archer Property Condition Assessment (PCA)					CH2M HILL
Key West, Florida					7-Sep-12
REHABILITATION CONCEPT					
PROGRAM ESTIMATE - ESTIMATE DETAIL: A & B Wings, Auditorium, and New Addition					
AC Gross sf: 33,398 (existing) + 1,920 sf (new addition) = 35,318 sf **Non AC SF = 4,321 (3,009 @ 1st Fl & 1,312 @ 2nd Fl)** **TOTAL sf = 39,639**					
Item	**Quntity**	**Unit**	**Unit Cost**	**Total**	
Fire Protection					
Fire Sprinkler System	39,639	sf	$3.00	$118,917	
				Total Fire Protection	$118,917
HVAC					
Equipment:					
HVAC - 250 sf/ton average	35,318	sf	$35.00	$1,236,130	
				Total HVAC	$1,236,130
Electrical					
Electrical system	39,639	sf	$30.00	$1,189,170	
Emergency generator (incl. platform/tank)	1	allow	$200,000.00	$200,000	
Fire alarm system	39,639	sf	$1.25	$49,549	
Special building systems (security/sound/dimming)	39,639	sf	$2.00	$79,278	
Lightning protection	39,639	sf	$1.00	$39,639	
Photovoltaic system (2.5% usage)	39,639	sf	$4.00	$158,556	
				Total Electrical	$1,716,192

Glynn Archer Property Condition Assessment (PCA)	CH2M HILL
Key West, Florida	7-Sep-12
REHABILITATION CONCEPT DETAIL RECAP	
PROGRAM ESTIMATE - ESTIMATE DETAIL: A & B Wings, Auditorium, and New Addition	
AC Gross sf: 33,398 (existing) + 1,920 sf (new addition) = 35,318 sf **Non AC SF = 4,321 (3,009 @ 1st Fl & 1,312 @ 2nd Fl)** **TOTAL sf = 39,639**	
Demolition	$346,388
Earthwork	$6,995
Dewatering	$5,000
Site Utilities	$180,000
Hardscape / Landscaping	$377,000
Site Concrete	$80,000
Layout	$5,000
Concrete	$18,320
Masonry	$21,000
Miscellaneous Metals	$19,900
Structural Steel	$1,894,950
Metal Stairs & Stair Railings	$9,100
Rough Carpentry	$20,000
Finish Carpentry	$100,000
Millwork	$115,000
Caulking & Waterproofing	$50,000
Building Insulation	$91,000
Fire Stopping	$10,000
Roofing	$242,388
Doors, Frames, Hardware	$135,000
Windows & Storefront	$557,000
Mirrors	$2,400
Stucco, Lath & Plaster	$171,000
Drywall	$385,700
Porcelain, Ceramic & Stone	$246,000
Countertops	$12,480
Carpet & Resilient	$91,100
Painting	$69,922
Acoustical Wall Panels	$35,000
Toilet Accessories	$20,000
Fire Extinguishers	$4,000
Toilet Partitions	$22,000
Signage	$18,000
LEED	$20,000
Furnishings	$51,000
Special Construction	$50,000
Coveying Systems	$105,000
Plumbing	$261,708
Fire Protection	$118,917
HVAC	$1,236,130
Electrical	$1,716,192
SUBTOTAL	**$8,920,589**

Glynn Archer Property Condition Assessment (PCA)		**CH2M HILL**
Key West, Florida		**7-Sep-12**
REHABILITATION CONCEPT DETAIL RECAP		
PROGRAM ESTIMATE - ESTIMATE DETAIL: A & B Wings, Auditorium, and New Addition		
AC Gross sf: 33,398 (existing) + 1,920 sf (new addition) = 35,318 sf **Non AC SF = 4,321 (3,009 @ 1st Fl & 1,312 @ 2nd Fl)** **TOTAL sf = 39,639**		
SUBTOTAL (from above)	$8,920,589	
General Conditions (10%)	$892,059	
Gen. Liability Insurance Premium (1%)	$98,126	
SUBTOTAL	$9,910,775	
Overhead & fee (7.50%)	$743,308	
SUBTOTAL	$10,654,083	
Payment & Performance Bond (2%)	$213,082	
Keys factor (20%)	$2,173,433	
SUBTOTAL	**$13,040,598**	
Contingency (10%)	**$1,304,060**	
A/E fee - Design(7%)	**$912,842**	
A/E fee - Construction (5%)	**$652,030**	
FF & E: Allowance	**$450,000**	
PROJECT TOTAL	**$16,359,530**	

Cost Estimate for Conversion Concept

Glynn Archer Property Condition Assessment (PCA)		CH2M HILL
Key West, Florida		7-Sep-12
CONVERSION CONCEPT		
PROGRAM ESTIMATE: A & B Wings, and Auditorium		
AC Gross SF = 33,398 (existing) Non AC SF = 4,321 (3,009 @ 1st Fl & 1,312 @ 2nd Fl) TOTAL SF = 37,719		
DIVISION	DESCRIPTION	AMOUNT
1	General Conditions	$935,760
2	Site Work	$899,288
3	Concrete	$1,173,863
4	Masonry	$0
5	Metals	$1,350,852
6	Wood Plastics	$235,000
7	Thermal & Moisture Protection	$485,025
8	Doors & Windows	$706,000
9	Finishes	$865,302
10	Specialties	$66,000
11	Equipment	$55,438
12	Furnishings	$51,000
13	Special Construction	$210,000
14	Conveying Systems	$250,000
15	Mechanical	$1,512,275
16	Electrical	$1,497,554
	SUBTOTAL	$10,293,357
	Gen. Liability Insurance Premium (1%)	$102,934
	Overhead & Fee (7.5%)	$779,722
	Payment & Performance Bond (2%)	$223,520
	Keys Factor (20%)	$2,279,906
	SUBTOTAL	$13,679,439
	Contingency (10%)	$1,367,944
	A/E fee - Design (7%)	$957,561
	A/E fee - Construction (5%)	$683,972
	FF & E: Allowance	$450,000
	PROJECT TOTAL	$17,138,916

Glynn Archer Property Condition Assessment (PCA)					CH2M HILL
Key West, Florida					7-Sep-12
CONVERSION CONCEPT					
PROGRAM ESTIMATE - ESTIMATE DETAIL: A & B Wings,and Auditorium					
AC Gross SF = 33,398 (existing) **Non AC SF = 4,321 (3,009 @ 1st Fl & 1,312 @ 2nd Fl)** **TOTAL SF = 37,719**					
Item	**Quntity**	**Unit**	**Unit Cost**	**Total**	
Demolition					
Demolish building C	16,000	sf	6.00	$96,000	
Selective demolition/asbestos & paint removal @ Bldg A & B	36,407	sf	7.00	$254,849	
Site demolition	1	ls	50,000.00	$50,000	
Exterior wall bracing	1	ls	200,000.00	$200,000	
				Total Demolition	$600,849
Earthwork					
Prep for new slab on grade	18,139	sf	$0.75	$13,604	
Imported fill Footing excavation & backfill	2,015	cy	$20.00	$40,300	
Soil poisioning/termite	18,139	sf	$0.25	$4,535	
				Total Earthwork	$58,439
Dewatering					
Surface pumping	1	allow	$5,000.00	$5,000	
				Total Dewatering	$5,000
Site Utilities					
Domestic Water - new service from street	1	ls	$20,000.00	$20,000	
Fire Line - new service from street	1	ls	$30,000.00	$30,000	
Irrigation water supply - new service from street	1	ls	$10,000.00	$10,000	
Sanitary sewer - new service from street	1	ls	$25,000.00	$25,000	
Storm sewer	1	ls	$75,000.00	$75,000	
New Cistern system	1	allow	$75,000.00	$75,000	
				Total Site Utilities	$235,000
Hardscaping/Landscaping					
Landscaping	1	ls	$150,000.00	$150,000	
Bituminous paving	3,000	sy	$ 30.00	$90,000	
Concrete curb & gutter	800	lf	$15.00	$12,000	
Concrete sidewalks	5,000	sf	$ 5.00	$25,000	
Brick pavers	3,000	sf	$ 10.00	$30,000	
Site amenities	1	allow	$ 25,000.00	$25,000	
Site lighting	1	ls	$ 25,000.00	$25,000	
Miscellaneous	1	allow	$ 20,000.00	$20,000	
				Total Hardscaping/Landscaping	$377,000

Glynn Archer Property Condition Assessment (PCA)					**CH2M HILL**
Key West, Florida					**7-Sep-12**
CONVERSION CONCEPT					
PROGRAM ESTIMATE - ESTIMATE DETAIL: A & B Wings,and Auditorium					
AC Gross SF = 33,398 (existing) **Non AC SF = 4,321 (3,009 @ 1st Fl & 1,312 @ 2nd Fl)** **TOTAL SF = 37,719**					
Item	**Quntity**	**Unit**	**Unit Cost**	**Total**	
Site Concrete					
Handicap ramps (4); 2 exterior & 2 interior	1	ls	80,000.00	$80,000	
				Total Site Concrete	$80,000
Augercast Piles					
Augercast piles (53; each - 10' deep)	530	lf	$50.00	$26,500	
Mobilization & test pile	1	ls	$30,000.00	$30,000	
				Total Augercast Piles	$56,500
Layout					
Concrete layout	1	ls	$10,000.00	$10,000	
				Total Layout	$10,000
Concrete					
Pile caps	125	cy	$600.00	$75,000	
Grade beams	445	cy	$600.00	$267,000	
4" slab on grade	18,139	sf	$5.00	$90,695	
5" slab on metal deck - 2nd floor	18,139	sf	$6.00	$108,834	
5" slab on metal deck - roof	18,139	sf	$6.00	$108,834	
				Total Concrete	$650,363
Masonry					
8" exterior CMU	-	sf	$0.00	$0	
				Total Masonry	$0
Miscellaneous Metals					
Elevator separator beams	4	ea	$500.00	$2,000	
Elevator hoist beams	2	ea	$ 300.00	$600	
Elevator Pit Ladders	2	ea	$ 1,200.00	$2,400	
Louvers (6 @ 10 sf ea)	300	sf	$ 40.00	$12,000	
Cooling tower support steel	1	ls	$ 10,000.00	$10,000	
Misc. steel	1	ls	$ 5,000.00	$5,000	
				Total Miscellaneous Metals	$32,000
Structural Steel					
Structural steel frame @ 2nd floor (15#/sf)	137	tons	$4,500.00	$616,500	
Structural steel frame @ roof (12#/sf)	110	tons	$4,500.00	$495,000	
Floor deck	18,139	sf	$ 4.00	$72,556	
Roof deck	18,139	sf	$ 3.50	$63,487	
Tie steel frame to existing exterior walls	1	ls	$ 50,000.00	$50,000	
Misc. angles & channels @ deck edge	1	ls	$ 20,000.00	$20,000	
FPR System	-		$ -	$0	
Structural connectors	-		$ -	$0	
				Total Structural Steel	$1,317,543

Glynn Archer Property Condition Assessment (PCA)					CH2M HILL
Key West, Florida					7-Sep-12
CONVERSION CONCEPT					
PROGRAM ESTIMATE - ESTIMATE DETAIL: A & B Wings,and Auditorium					
AC Gross SF = 33,398 (existing) **Non AC SF = 4,321 (3,009 @ 1st Fl & 1,312 @ 2nd Fl)** **TOTAL SF = 37,719**					
Item	**Quntity**	**Unit**	**Unit Cost**	**Total**	
Metal Stairs & stair Railings					
Concrete filled pan stairs (4 stairs)	86	risers	275.00	$23,650	
Stair rail; single line	300	lf	25.00	$7,500	
Stair rail; picket	100	lf	50.00	$5,000	
				Total Metal Stairs & Stair Railings	$36,150
Rough Carpentry					
Wood trusses / outlooks	1	ls	$20,000.00	$ 20,000	
				Total Rough Carpentry	$ 20,000
Finish Carpentry					
Interior wood base & crown	1	allow	$50,000.00	$50,000	
Miscellaneous finish carpentry	1	ls	$50,000.00	$50,000	
				Total Finish Carpentry	$100,000
Millwork					
Chamber dias	1	ls	$10,000.00	$10,000	
Miscellaneous millwork & casework	300	lf	$350.00	$105,000	
				Total Millwork	$115,000
Caulking & Waterproofing					
Exterior caulking	1	ls	$20,000.00	$20,000	
Interior caulking	1	ls	$ 25,000.00	$25,000	
Miscellaneous waterproofing	1	ls	$ 5,000.00	$5,000	
				Total Caulking & Waterproofing	$50,000
Building Insulation					
Insulation; walls and roof	44,000	sf	$2.00	$88,000	
				Total Building Insulation	$88,000
Fire stopping					
Misc. fire stopping	1	ls	$ 3,000.00	$3,000	
				Total Fire Stopping	$3,000
Spray Fireproofing					
Spray fireproofing	37,719	sf	$ 3.00	$113,157	
				Total Spray Fireproofing	$113,157

Glynn Archer Property Condition Assessment (PCA)					CH2M HILL
Key West, Florida					7-Sep-12
CONVERSION CONCEPT					
PROGRAM ESTIMATE - ESTIMATE DETAIL: A & B Wings,and Auditorium					
AC Gross SF = 33,398 (existing) **Non AC SF = 4,321 (3,009 @ 1st Fl & 1,312 @ 2nd Fl)** **TOTAL SF = 37,719**					
Item	**Quntity**	**Unit**	**Unit Cost**	**Total**	
Roofing					
Mod. Bitumen roof and flashings	18139	sf	$12.00	$217,668	
Collector boxes & downspouts	1	ls	$10,000.00	$10,000	
Walkway pads	500	sf	$4.00	$2,000	
Overflow scuppers @ roof	6	ea	$200.00	$1,200	
				Total Roofing	$230,868
Doors, Frames, Hardware & Installation					
Single doors	62	ea	$1,500.00	$93,000	
Double doors	14	ea	$3,500.00	$49,000	
				Doors, Frames Hardware & Installation	$142,000
Windows & Storefront					
Typical Building Windows (170 ea x 36 sf)	170	ea	$3,000.00	$510,000	
Storefront & sidelights	4	ea	$3,500.00	$14,000	
Lightwells	4	ea	$10,000.00	$40,000	
				Total Windows & Storefront	$564,000
Mirrors					
Mirrors @ restrooms	12	ea	$200.00	$2,400	
				Total Mirrors	$2,400
Stucco, Lath & Plaster					
Rehab existing stucco	10,000	sf	$6.00	$60,000	
Exterior plaster ceiling	4,000	sf	$6.00	$24,000	
Auditorium ceiling	4,550	sf	$15.00	$68,250	
Miscellaneous stucco	3500	sf	$6.00	$21,000	
				Total Stucco, Lath & Plaster	$81,000
Drywall					
3 5/8" metal studs, 2 layers 5/8" DW 1 side, & 1 layer 5/8"	12,600	sf	$6.00	$75,600	
DW 1 side					
3 5/8" met studs, 5/8" DW 2 sides (interior walls)	12,000	sf	$5.00	$60,000	
3 5/8" met. Furring, 5/8" drywall (perimeter walls)	25,000	sf	$5.00	$125,000	
Double metal stud chase wall	800	sf	$8.00	$6,400	
Drywall ceilings (restrooms)	2,400	sf	$5.00	$12,000	
Acoustical tile ceilings	28,600	sf	$3.00	$85,800	
				Total Drywall	$364,800

Glynn Archer Property Condition Assessment (PCA)					CH2M HILL
Key West, Florida					7-Sep-12
CONVERSION CONCEPT					
PROGRAM ESTIMATE - ESTIMATE DETAIL: A & B Wings,and Auditorium					
AC Gross SF = 33,398 (existing) **Non AC SF = 4,321 (3,009 @ 1st Fl & 1,312 @ 2nd Fl)** **TOTAL SF = 37,719**					
Item	**Quntity**	**Unit**	**Unit Cost**	**Total**	
Porcelain, Ceramic & Stone					
porcelain tile floors	12,000	sf	$20.00	$240,000	
Ceramic tile floors at restrooms	1,000	sf	$6.00	$6,000	
Ceramic tile walls at restrooms	1,000	sf	$6.00	$6,000	
				Total Porcelain, Ceramic, Stone	$246,000
Countertops					
Stone top @ restrooms	128	sf	$75.00	$9,600	
Stone backsplash @ restrooms	96	lf	$30.00	$2,880	
				Total Countertops	$12,480
Carpet and Resilient					
Carpet @ Offices and Auditorium	2,500	sy	$25.00	$ 62,500	
VCT Flooring	2,000	sf	$3.00	$ 6,000	
VCT base	250	lf	$2.00	$500	
				Total Carpet and Resilient	$ 69,000
Painting					
Paint doors and frames	72	ea	$100.00	$7,200	
Paint stucco	25,000	sf	$0.60	$15,000	
Paint @ Plaster ceilings	8,871	sf	$0.50	$4,436	
Paint drywall walls	80,000	sf	$0.35	$28,000	
Paint drywall ceilings	2,400	sf	$0.40	$960	
Paint CMU	6,144	sf	$0.60	$3,686	
Seal concrete floors	640	sf	$1.00	$640	
Miscellaneous painting	1	ls	$ 10,000.00	$10,000	
				Total Painting	$69,922
Acoustic Wall Panels					
Auditorium Acoustical Wall Panels	700	sf	$50.00	$35,000.00	
				Total fabric / Wallcovering / Acoustic Wall Panels	$35,000
Toilet Accessories Including Installation					
Toilet accessories@ restrooms	4	rooms	$5,000.00	$20,000	
				Total Toilet Accessories	$20,000
Fire Extinguishers					
Fire extinguishers	20	ea	$200.00	$4,000	
				Total Fire Extinguishers	$4,000
Toilet Partitions					
Regular/standard	8	ea	$ 1,500.00	$12,000	
Handicapped	4	ea	$ 2,000.00	$8,000	
Urinal screens	2	ea	$ 1,000.00	$2,000	
				Total Toilet Partitions	$22,000

Glynn Archer Property Condition Assessment (PCA)					CH2M HILL
Key West, Florida					7-Sep-12
CONVERSION CONCEPT					
PROGRAM ESTIMATE - ESTIMATE DETAIL: A & B Wings,and Auditorium					
AC Gross SF = 33,398 (existing) **Non AC SF = 4,321 (3,009 @ 1st Fl & 1,312 @ 2nd Fl)** **TOTAL SF = 37,719**					
Item	**Quntity**	**Unit**	**Unit Cost**	**Total**	
Signage					
Building Exterior Signage	1	allow	$8,000.00	$8,000	
Interior Signage	1	allow	$10,000.00	$10,000	
				Total Signage	$18,000
Equipment					
Procedures & Commissioning	1	ls	$20,000.00	$20,000	
				Total Equipment	$20,000
Furnishings					
Window treatments	170	win.	$300.00	$51,000	
Entry mats				$0	
				Total Furnishings	$51,000
Special Construction					
Historic Exterior Renovation	1	ls	$50,000.00	$50,000	
				Total Special Construction	$50,000
Conveying Systems					
Elevator - 2 stops (2 elevators)	2	ea	$100,000.00	$200,000	
Cab allowance	2	ea	$5,000.00	$10,000	
				Total Conveying Systems	$210,000
Plumbing (rough)					
Plumbing Systems	33,398	sf	$ 6.00	$200,388	
Solar hot water system	1	ea	$ 20,000.00	$20,000	
Plumbing (finished)					
Lavatories	12	ea	$750.00	$9,000	
Wall hung lavatories	4	ea	$600.00	$2,400	
water closets	12	ea	$800.00	$9,600	
urinals	4	ea	$800.00	$3,200	
mop sinks	2	ea	$400.00	$800	
Drinking fountains	4	ea	$1,200.00	$4,800	
				Total Plumbing	$250,188

Glynn Archer Property Condition Assessment (PCA)					CH2M HILL
Key West, Florida					7-Sep-12
CONVERSION CONCEPT					
PROGRAM ESTIMATE - ESTIMATE DETAIL: A & B Wings,and Auditorium					
AC Gross SF = 33,398 (existing) **Non AC SF = 4,321 (3,009 @ 1st Fl & 1,312 @ 2nd Fl)** **TOTAL SF = 37,719**					
Item	**Quntity**	**Unit**	**Unit Cost**	**Total**	
Fire Protection					
Fire Sprinkler System	37,719	sf	$3.00	$113,157	
				Total Fire Protection	$113,157
HVAC					
Equipment:					
HVAC - 250 sf/ton average	33,398	sf	$35.00	$1,168,930	
				Total HVAC	$1,168,930
Electrical					
Electrical system	37,719	sf	$30.00	$1,131,570	
Emergency generator (incl. platform/tank)	1	allow	$200,000.00	$200,000	
Fire alarm system	37,719	sf	$1.25	$47,149	
Special building systems (security/sound/dimming)	37,719	sf	$2.00	$75,438	
Lightning protection	37,719	sf	$1.00	$37,719	
Photovoltaic system (2.5% usage)	37,719	sf	$4.00	$150,876	
				Total Electrical	$1,642,752

Glynn Archer Property Condition Assessment (PCA) Key West, Florida	CH2M HILL 7-Sep-12
CONVERSION CONCEPT DETAIL RECAP	
PROGRAM ESTIMATE - ESTIMATE DETAIL: A & B Wings,and Auditorium	
AC Gross SF = 33,398 (existing) **Non AC SF = 4,321 (3,009 @ 1st Fl & 1,312 @ 2nd Fl)** **TOTAL SF = 37,719**	
Demolition	$600,849
Earthwork	$58,439
Dewatering	$5,000
Site Utilities	$235,000
Hardscape / Landscaping	$377,000
Site Concrete	$80,000
Augercast Piles	$56,500
Layout	$10,000
Concrete	$650,363
Masonry	$0
Miscellaneous Metals	$32,000
Structural Steel	$1,317,543
Metal Stairs & Stair Railings	$36,150
Rough Carpentry	$20,000
Finish Carpentry	$100,000
Millwork	$115,000
Caulking & Waterproofing	$50,000
Building Insulation	$88,000
Fire Stopping	$3,000
Spray Fireproofing	$113,157
Roofing	$230,868
Doors, Frames, Hardware	$142,000
Windows & Storefront	$564,000
Mirrors	$2,400
Stucco, Lath & Plaster	$81,000
Drywall	$364,800
Porcelain, Ceramic, & Stone	$246,000
Countertops	$12,480
Carpet & Resilient	$91,100
Painting	$69,922
Acoustical Wall Panels	$35,000
Toilet Accessories	$20,000
Fire Extinguishers	$4,000
Toilet Partitions	$22,000
Signage	$18,000
LEED	$20,000
Furnishings	$51,000
Special Construction	$50,000
Coveying Systems	$210,000
Plumbing	$250,188
Fire Protection	$113,157
HVAC	$1,168,930
Electrical	$1,642,752
SUBTOTAL	**$9,357,597**

Glynn Archer Property Condition Assessment (PCA)		**CH2M HILL**
Key West, Florida		**7-Sep-12**
CONVERSION CONCEPT		
PROGRAM ESTIMATE - ESTIMATE DETAIL: A & B Wings,and Auditorium		
AC Gross SF = 33,398 (existing) **Non AC SF = 4,321 (3,009 @ 1st Fl & 1,312 @ 2nd Fl)** **TOTAL SF = 37,719**		
SUBTOTAL (from above)	$9,357,597	
General Conditions (10%)	$935,760	
Gen. Liability Insurance Premium (1%)	$102,934	
SUBTOTAL	$10,396,290	
Overhead & fee (7.50%)	$779,722	
SUBTOTAL	$11,176,012	
Payment & Performance Bond (2%)	$223,520	
Keys factor (20%)	$2,279,906	
SUBTOTAL	**$13,679,439**	
Contingency (10%)	**$1,367,944**	
A/E fee - Design (7%)	**$957,561**	
A/E fee - Construction (5%)	**$683,972**	
FF & E: Allowance	**$450,000**	
PROJECT TOTAL	**$17,138,916**	

Appendix G
Calculations and Modeling Data

Yolles, A CH2M HILL Company
22 Cortlandt Street
New York, NY 10007
tel +1 212 608 3990 fax +1 212 566 5059
www.ch2mhill.com/yolles

Yolles
A CH2M HILL Company

GLYNN ARCHER SCHOOL ASSEMBLY WEIGHTS:

1. ROOF LOADS

ROOF DEAD LOADS

ROOFING MATERIAL	0.5 PSF
4" RIGID INSULATION	3.0 PSF
VAPOR BARRIER	0.5 PSF
1"x6" WOOD DECKING	3.0 PSF
2x8 ROOF JOISTS AT 24" O.C.	2.5 PSF
BRACING MEMBERS	1.5 PSF
SUB TOTAL ON ROOF JOISTS	11.0 **PSF**
2x8 CEILING JOISTS AT 24" O.C.	2.5 PSF
MECHANICAL DUCT	2.0 PSF
SPRINKLER SYSTEM/PLUMBING	1.5 PSF
SUSPENDED GYPSUM BOARD CEILING SYS.	3.0 PSF
LIGHTS & MISC.	1.0 PSF
SUB TOTAL ON CEILING JOISTS	10.0 **PSF**
TOTAL ROOF DEAD LOADS	**21.0 PSF**

ROOF LIVE LOADS 20.0 PSF

2. SECOND FLOOR LOADS

SECOND FLOOR DEAD LOADS

PARTITION WALL	15.0 PSF = LL
EXISTING TILES	1.0 PSF
1"X6" WOOD DECKING	3.0 PSF
2"X14" FLOOR WOOD JOISTS AT 16" O.C.	3.0 PSF
MECHANICAL DUCT	2.0 PSF
SPRINKLER SYSTEM/PLUMBING	1.5 PSF
SUSPENDED GYPSUM BOARD CEILING SYS.	3.0 PSF
LIGHTS & MISC.	1.0 PSF
TOTAL SECOND FLOOR DEAD LOADS	~~20.5~~ PSF 14.5

SECOND FLOOR LIVE LOADS

OFFICE AREA	50.0 PSF
CORRIDORS	80.0 PSF

Yolles, A CH2M HILL Company
22 Cortlandt Street
New York, NY 10007
tel +1 212 608 3990 fax +1 212 566 5059
www.ch2mhill.com/yolles

Yolles
A CH2M HILL Company

3. FIRST FLOOR LOADS

FIRST FLOOR DEAD LOADS

PARTITION WALL	15.0 PSF = LL
EXISTING TILES	1.0 PSF
1"X6" WOOD DECKING	3.0 PSF
2"X14" FLOOR WOOD JOISTS AT 16" O.C.	3.0 PSF
PLUMBING	1.5 PSF
TOTAL FIRST FLOOR DEAD LOADS	**~~23.5~~ PSF** 8.5

FIRST FLOOR LIVE LOADS

FIRST FLOOR	100.0 PSF

Glynn Archer School			Key West, Florida						
Building A and Auditorium									
Roof Level Diaphragm Design									
	Diaphragm Shear	Diaphragm Length	Diaphragm Shear (Ultimate)	Convert to Ultimate to ASD Load	Diaphragm Shear (ASD)	Existing Allowable Diaphrgam Shear	Shear at Zero Diaphragm Span	Location of Reinforcement.	
	(lbs)	(ft)	(PLF)		PLF	(PLF)	(ft)	(ft)	
V_{R1}	41968	71.67	585.57	0.60	351.34	150	59.63	34.17	
V_{R4}	41968	71.67	585.57	0.60	351.34	150	59.63	34.17	
V_{R5}	26750	42.63	627.49	0.60	376.50	150	36.60	22.02	
V_{R6}	26750	42.63	627.49	0.60	376.50	150	36.60	22.02	
						Straight lumber Sheathing		Negative Value = No Reinf.	
2nd Level Diaphragm Design									
	Diaphragm Shear	Diaphragm Length	Diaphragm Shear (Ultimate)	Convert to Ultimate to ASD Load	Diaphragm Shear (ASD)	Existing Allowable Diaphrgam Shear *	Shear at Zero Diaphragm Span	Location of Reinforcement.	Collector Force (ASD)
	(lbs)	(ft)	(PLF)		(PLF)	(PLF)	(ft)	(ft)	(lbs)
V_{21}	18175	71.67	253.59	0.60	152.16	300	16.28	-15.82	
V_{22L}	15565	55.25	281.72	0.60	169.03	300	17.05	-13.21	
V_{22R}	23469	126.00	186.26	0.60	111.76	300	25.73	-43.34	6174.582
V_{23L}	23468	126.00	186.25	0.60	111.75	300	25.73	-43.34	6174.319
V_{23R}	15210	55.25	275.29	0.60	165.18	300	15.85	-12.94	
V_{24}	17806	71.67	248.44	0.60	149.07	300	16.69	-16.90	
V_{AR1}	31951	51.48	620.66	0.60	372.40	300	31.59	6.14	
V_{AR2}	28997	51.48	563.27	0.60	337.96	300	31.59	3.55	
V_{25}	36625	42.63	859.14	0.60	515.48	300	36.50	15.26	34215.69
V_{26}	36604	42.63	858.64	0.60	515.19	300	36.50	15.25	
						Daigonal lumber Sheathing		Negative Value = No Reinf.	
First Level Diaphragm Design									
	Diaphragm Shear	Diaphragm Length	Diaphragm Shear (Ultimate)	Convert to Ultimate to ASD Load	Diaphragm Shear (ASD)	Existing Allowable Diaphrgam Shear	Shear at Zero Diaphragm Span	Location of Reinforcement.	Collector Force (ASD)
	(lbs)	(ft)	(PLF)		(PLF)	(PLF)	(ft)	(ft)	(lbs)
V_{11}	10288	71.67	143.55	0.60	86.13	150	16.28	-12.07	
V_{12L}	8811	55.25	159.48	0.60	95.69	150	17.05	-9.68	
V_{12R}	13284	126.00	105.43	0.60	63.26	150	25.74	-35.30	3494.957
V_{13L}	13284	126.00	105.43	0.60	63.26	150	25.74	-35.30	3494.957
V_{13R}	8069	55.25	146.05	0.60	87.63	150	15.82	-11.26	
V_{14}	10079	71.67	140.63	0.60	84.38	150	16.72	-13.00	
V_{15}	20731	42.63	486.30	0.60	291.78	150	36.50	17.74	
V_{16}	20731	42.63	486.30	0.60	291.78	150	36.50	17.74	
						Straight lumber Sheathing		Negative Value = No Reinf.	

Glynn Archer School			Key West, Florida					
Building B								
Roof Level Diaphragm Design								
	Diaphragm Shear	Diaphragm Length	Diaphragm Shear (Ultimate)	Convert to Ultimate to ASD Load	Diaphragm Shear (ASD)	Existing Allowable Diaphrgam Shear	Shear at Zero Diaphragm Span	Location of Reinforcement.
	(lbs)	(ft)	(PLF)		PLF	(PLF)	(ft)	(ft)
V_{BR1}	26597	42.62	624.05	0.60	374.43	150	36.23	21.72
V_{BR2L}	24406	42.62	572.64	0.60	343.59	150	36.60	20.62
V_{B3R}	42206	71.50	590.29	0.60	354.18	150	59.63	34.37
V_{BR4}	42206	71.51	590.21	0.60	354.13	150	59.63	34.37
						Straight lumber Sheathing		Negative Value = No Reinf.
2nd Level Diaphragm Design								
	Diaphragm Shear	Diaphragm Length	Diaphragm Shear (Ultimate)	Convert to Ultimate to ASD Load	Diaphragm Shear (ASD)	Existing Allowable Diaphrgam Shear	Shear at Zero Diaphragm Span	Location of Reinforcement.
	(lbs)	(ft)	(PLF)		(PLF)	(PLF)	(ft)	(ft)
V_{B21}	36283	42.62	851.31	0.60	510.79	300	36.23	14.95
V_{B22}	36283	42.62	851.31	0.60	510.79	300	36.60	15.10
V_{B23}	57732	71.50	807.44	0.60	484.46	300	59.63	22.70
V_{B24}	57732	71.51	807.33	0.60	484.40	300	59.63	22.70
						Straight lumber Sheathing		Negative Value = No Reinf.
First Level Diaphragm Design								
	Diaphragm Shear	Diaphragm Length	Diaphragm Shear (Ultimate)	Convert to Ultimate to ASD Load	Diaphragm Shear (ASD)	Existing Allowable Diaphrgam Shear	Shear at Zero Diaphragm Span	Location of Reinforcement.
	(lbs)	(ft)	(PLF)		(PLF)	(PLF)	(ft)	(ft)
V_{B11}	20537	42.62	481.86	0.60	289.12	300	36.23	-1.36
V_{B12}	20537	42.62	481.86	0.60	289.12	300	36.60	-1.38
V_{B13}	32678	71.50	457.03	0.60	274.22	300	59.63	-5.61
V_{B14}	32678	71.51	456.97	0.60	274.18	300	59.63	-5.61
						Straight lumber Sheathing		Negative Value = No Reinf.

Building A - 2nd Floor Framing Plan

Beam #	Span (ft)	Beam Length		Width	Depth	O.C.	Live Load (psf)		Adjusted Live Load (psf)	Dead Load (psf)		Adjusted Dead Load (psf)	Total Load (psf)	Max Shear (lb)	Max Moment (lbs-ft)
		Feet	Inches				Partition Wall								
2A1	21.00	21.00	0.00	1.75	13.50	1.33	15.00	50.00	86.67		14.50	19.33	106.00	1113.00	5843.25
2A2	21.25	21.00	3.00	1.75	13.50	1.33	15.00	50.00	86.67		14.50	19.33	106.00	1126.25	5983.20
2A3	21.25	21.00	3.00	1.75	13.50	1.33	15.00	50.00	86.67		14.50	19.33	106.00	1126.25	5983.20
2A4	13.83	13.00	10.00	1.75	13.50	1.33	15.00	50.00	86.67		14.50	19.33	106.00	733.17	2535.53
2A5	21.25	21.00	3.00	1.75	13.50	1.33	15.00	50.00	86.67		14.50	19.33	106.00	1126.25	5983.20
2A6	21.08	21.00	1.00	1.75	13.50	1.33	15.00	50.00	86.67		14.50	19.33	106.00	1117.42	5889.72
2A7	11.83	11.00	10.00	1.75	13.50	1.33	15.00	80.00	126.67		14.50	19.33	146.00	863.83	2555.51
2A8	21.08	21.00	1.00	1.75	13.50	1.33	15.00	50.00	86.67		14.50	19.33	106.00	1117.42	5889.72
2A9	21.25	21.00	3.00	1.75	13.50	1.33	15.00	50.00	86.67		14.50	19.33	106.00	1126.25	5983.20
2A10	12.25	12.00	3.00	1.75	13.50	1.33	15.00	80.00	126.67		14.50	19.33	146.00	894.25	2738.64

Building B - 2nd Floor Framing Plan

Beam #	Span (ft)	Beam Length		Width	Depth	O.C.	Live Load (psf)		Adjusted Live Load (psf)	Dead Load (psf)		Adjusted Dead Load (psf)	Total Load (psf)	Max Shear (lb)	Max Moment (lbs-ft)
		Feet	Inches				Partition Wall								
2B1	20.83	20.00	10.00	1.75	13.00	1.00	15.00	50.00	65.00		14.50	14.50	79.50	828.13	4313.15
2B2	22.83	22.00	10.00	1.75	13.00	1.00	15.00	50.00	65.00		14.50	14.50	79.50	907.63	5181.03
2B3	21.00	21.00	0.00	1.75	13.00	1.00	15.00	50.00	65.00		14.50	14.50	79.50	834.75	4382.44
2B4	11.92	11.00	11.00	1.75	13.00	1.00	15.00	80.00	95.00		14.50	14.50	109.50	652.44	1943.72
2B5	20.83	20.00	10.00	1.75	13.00	1.00	15.00	50.00	65.00		14.50	14.50	79.50	828.13	4313.15
2B6	23.00	23.00	0.00	1.75	13.00	1.00	15.00	50.00	65.00		14.50	14.50	79.50	914.25	5256.94
2B7	20.83	20.00	10.00	1.75	13.00	1.00	15.00	50.00	65.00		14.50	14.50	79.50	828.13	4313.15
2B8	12.08	12.00	1.00	1.75	13.00	1.00	15.00	80.00	95.00		14.50	14.50	109.50	661.56	1998.47

Auditorium - Roof Framing Plan

Beam #	Span (ft)	Beam Length		Width	Depth	O.C.	Live Load (psf)		Adjusted Live Load (psf)	Dead Load (psf)		Adjusted Dead Load (psf)	Total Load (psf)	Max Shear (lb)	Max Moment (lbs-ft)
		Feet	Inches				Partition Wall								
2C1	10.50	10.00	6.00	1.63	5.50	2.00	0.00	20.00	40.00		11.00	22.00	62.00	325.50	854.44
2C2	8.50	8.00	6.00	1.63	5.50	2.00	0.00	20.00	40.00		11.00	22.00	62.00	263.50	559.94
2C3	8.50	8.00	6.00	1.63	5.50	2.00	0.00	20.00	40.00		11.00	22.00	62.00	263.50	559.94
2C4	10.50	10.00	6.00	1.63	5.50	2.00	0.00	20.00	40.00		11.00	22.00	62.00	325.50	854.44

Project Name:	Glynn Archer School	Project Code	
Member Information:	2nd floor joist - 2B1 (SINGLE SPAN)	Date:	

Members Bending stress F_b (psi)		1500
Members Shear stress F_v (psi)		175
Members Perpendicular Bearing Stress		825
Load duration Factor C_D		1
Wet Service Factor C_M		1
temperature Factor C_t		1
Beam Stability Factor CL		1
Size Factor C_F		1
Flat Use Factor C_{fu}		1
Incising Factor Ci		0.8
Repetitive Member Factor C_r		1.15
Interior Bearing Arear Factor C_b		1.07
End Bearing Arear Factor C_b		1.07
Adjusted Allowable Bending Stress (psi)		
$F'_b=F_b \times C_D \times C_M \times C_t \times C_L \times C_F \times C_{fu} \times C_i \times C_r$		**1380**
Adjusted Allowable Shear Stress (psi)		
$F'_v=F_v \times C_D \times C_M \times C_t \times C_F \times C_{fu} \times C_i$		**140**
Adjusted Allowable perpendicular Int. bearing Stress (psi)		
$F'_{perp\text{-}c}=F_{perp\text{-}c} \times C_M \times C_t \times C_i \times C_b$		**705**
Adjusted Allowable End perpendicular bearing Stress (psi)		
$F'_{perp\text{-}c}=F_{perp\text{-}c} \times C_M \times C_t \times C_i \times C_b$		**705**

Demand Moment (lbs-ft)			4313.151		
Demand Shear (lbs)			828.125		
Interior Demand Reaction R (lbs)					
End Demand Reaction R (lbs)			828.125		
Member Properties:					
Exist Width b (in)	1.75	Exist Depth d (in)	13		
New Width b (in)	0	New Depth d (in)	0		
Section Modulus (in^3)			49.29		0.00
Moment of Inertia Strong-Axis (in^4)			320.40		0.00
Moment of Inertia Weak-Axis (in^4)			5.81		0.00
Number of Plies			1		0
Interior Perpemdicular Bearing Width d_b (in)			5.5		
End Perpemdicular Bearing Width d_b (in)			5.5		
Demand Bending Stress (psi)					
fb = M/S			**1050**		OK
Demand Shear Stress (psi)					
$fv=1.5 \times (V/bd_b)$			**55**		OK
Demand Interior Perpendicular Bearing Stress (psi)					
$fPerp\text{-}c= (R/bd_b)$			**0**		OK
Demand End Perpendicular Bearing Stress (psi)					
$fPerp\text{-}c= (R/bd_b)$			**86**		OK

Project Name:	Glynn Archer School	Project Code	
Member Information:	2nd floor joist - 2B2 (SINGLE SPAN)	Date:	

Members Bending stress F_b (psi)		1500
Members Shear stress F_v (psi)		175
Members Perpendicular Bearing Stress		825
Load duration Factor C_D		1
Wet Service Factor C_M		1
temperature Factor C_t		1
Beam Stability Factor CL		1
Size Factor C_F		1
Flat Use Factor C_{fu}		1
Incising Factor Ci		0.8
Repetitive Member Factor C_r		1.15
Interior Bearing Arear Factor C_b		1.07
End Bearing Arear Factor C_b		1.07
Adjusted Allowable Bending Stress (psi)		
$F'_b=F_b \times C_D \times C_M \times C_t \times C_L \times C_F \times C_{fu} \times C_i \times C_r$		**1380**
Adjusted Allowable Shear Stress (psi)		
$F'_v=F_v \times C_D \times C_M \times C_t \times C_F \times C_{fu} \times C_i$		**140**
Adjusted Allowable perpendicular Int. bearing Stress (psi)		
$F'_{perp\text{-}c}=F_{perp\text{-}c} \times C_M \times C_t \times C_i \times C_b$		**705**
Adjusted Allowable End perpendicular bearing Stress (psi)		
$F'_{perp\text{-}c}=F_{perp\text{-}c} \times C_M \times C_t \times C_i \times C_b$		**705**

Demand Moment (lbs-ft)			5181.026		
Demand Shear (lbs)			907.625		
Interior Demand Reaction R (lbs)					
End Demand Reaction R (lbs)			907.625		
Member Properties:					
Exist Width b (in)	1.75	Exist Depth d (in)	13		
New Width b (in)	0	New Depth d (in)	0		
Section Modulus (in^3)			49.29		0.00
Moment of Inertia Strong-Axis (in^4)			320.40		0.00
Moment of Inertia Weak-Axis (in^4)			5.81		0.00
Number of Plies			1		0
Interior Perpemdicular Bearing Width (in)			5.5		
End Perpemdicular Bearing Width (in)			5.5		
Demand Bending Stress (psi)					
fb = M/S			**1261**		OK
Demand Shear Stress (psi)					
fv=1.5 x (V/bd)			**60**		OK
Demand Interior Perpendicular Bearing Stress (psi)					
fPerp-c= (R/bd_b)			**0**		OK
Demand End Perpendicular Bearing Stress (psi)					
fPerp-c= (R/bd_b)			**94**		OK

Project Name:	Glynn Archer School	Project Code	
Member Information:	2nd floor joist - 2B3 (SINGLE SPAN)	Date:	

Members Bending stress F_b (psi)		1500
Members Shear stress F_v (psi)		175
Members Perpendicular Bearing Stress		825
Load duration Factor C_D		1
Wet Service Factor C_M		1
temperature Factor C_t		1
Beam Stability Factor CL		1
Size Factor C_F		1
Flat Use Factor C_{fu}		1
Incising Factor Ci		0.8
Repetitive Member Factor C_r		1.15
Interior Bearing Arear Factor C_b		1.07
End Bearing Arear Factor C_b		1.07
Adjusted Allowable Bending Stress (psi)		
$F'_b=F_b \times C_D \times C_M \times C_t \times C_L \times C_F \times C_{fu} \times C_i \times C_r$		**1380**
Adjusted Allowable Shear Stress (psi)		
$F'_v=F_v \times C_D \times C_M \times C_t \times C_F \times C_{fu} \times C_i$		**140**
Adjusted Allowable perpendicular Int. bearing Stress (psi)		
$F'_{perp\text{-}c}=F_{perp\text{-}c} \times C_M \times C_t \times C_i \times C_b$		**705**
Adjusted Allowable End perpendicular bearing Stress (psi)		
$F'_{perp\text{-}c}=F_{perp\text{-}c} \times C_M \times C_t \times C_i \times C_b$		**705**

Demand Moment (lbs-ft)			4382.438		
Demand Shear (lbs)			834.75		
Interior Demand Reaction R (lbs)					
End Demand Reaction R (lbs)			834.75		
Member Properties:					
Exist Width b (in)	1.75	Exist Depth d (in)	13		
New Width b (in)	0	New Depth d (in)	0		
Section Modulus (in^3)			49.29		0.00
Moment of Inertia Strong-Axis (in^4)			320.40		0.00
Moment of Inertia Weak-Axis (in^4)			5.81		0.00
Number of Plies			1		0
Interior Perpemdicular Bearing Width (in)			5.5		
End Perpemdicular Bearing Width (in)			5.5		
Demand Bending Stress (psi)					
fb = M/S			**1067**		OK
Demand Shear Stress (psi)					
fv=1.5 x (V/bd)			**55**		OK
Demand Interior Perpendicular Bearing Stress (psi)					
fPerp-c= (R/bd_b)			**0**		OK
Demand End Perpendicular Bearing Stress (psi)					
fPerp-c= (R/bd_b)			**87**		OK

Project Name:	Glynn Archer School	Project Code	
Member Information:	2nd floor joist - 2B4 (SINGLE SPAN)	Date:	

Members Bending stress F_b (psi)		1500
Members Shear stress F_v (psi)		175
Members Perpendicular Bearing Stress		825
Load duration Factor C_D		1
Wet Service Factor C_M		1
temperature Factor C_t		1
Beam Stability Factor CL		1
Size Factor C_F		1
Flat Use Factor C_{fu}		1
Incising Factor Ci		0.8
Repetitive Member Factor C_r		1.15
Interior Bearing Arear Factor C_b		1.07
End Bearing Arear Factor C_b		1.07
Adjusted Allowable Bending Stress (psi)		
$F'_b=F_b \times C_D \times C_M \times C_t \times C_L \times C_F \times C_{fu} \times C_i \times C_r$		**1380**
Adjusted Allowable Shear Stress (psi)		
$F'_v=F_v \times C_D \times C_M \times C_t \times C_F \times C_{fu} \times C_i$		**140**
Adjusted Allowable perpendicular Int. bearing Stress (psi)		
$F'_{perp\text{-}c}=F_{perp\text{-}c} \times C_M \times C_t \times C_i \times C_b$		**705**
Adjusted Allowable End perpendicular bearing Stress (psi)		
$F'_{perp\text{-}c}=F_{perp\text{-}c} \times C_M \times C_t \times C_i \times C_b$		**705**

Demand Moment (lbs-ft)			1943.72		
Demand Shear (lbs)			652.4375		
Interior Demand Reaction R (lbs)					
End Demand Reaction R (lbs)			652.4375		
Member Properties:					
Exist Width b (in)	1.75	Exist Depth d (in)	13		
New Width b (in)	0	New Depth d (in)	0		
Section Modulus (in^3)			49.29		0.00
Moment of Inertia Strong-Axis (in^4)			320.40		0.00
Moment of Inertia Weak-Axis (in^4)			5.81		0.00
Number of Plies			1		0
Interior Perpemdicular Bearing Width (in)			5.5		
End Perpemdicular Bearing Width (in)			5.5		
Demand Bending Stress (psi)					
fb = M/S			**473**		OK
Demand Shear Stress (psi)					
fv=1.5 x (V/bd)			**43**		OK
Demand Interior Perpendicular Bearing Stress (psi)					
fPerp-c= (R/bd_b)			**0**		OK
Demand End Perpendicular Bearing Stress (psi)					
fPerp-c= (R/bd_b)			**68**		OK

Project Name:	Glynn Archer School	Project Code	
Member Information:	2nd floor joist - 2B5 (SINGLE SPAN)	Date:	

Members Bending stress F_b (psi)		1500
Members Shear stress F_v (psi)		175
Members Perpendicular Bearing Stress		825
Load duration Factor C_D		1
Wet Service Factor C_M		1
temperature Factor C_t		1
Beam Stability Factor CL		1
Size Factor C_F		1
Flat Use Factor C_{fu}		1
Incising Factor Ci		0.8
Repetitive Member Factor C_r		1.15
Interior Bearing Arear Factor C_b		1.07
End Bearing Arear Factor C_b		1.07
Adjusted Allowable Bending Stress (psi)		
$F'_b=F_b \times C_D \times C_M \times C_t \times C_L \times C_F \times C_{fu} \times C_i \times C_r$		**1380**
Adjusted Allowable Shear Stress (psi)		
$F'_v=F_v \times C_D \times C_M \times C_t \times C_F \times C_{fu} \times C_i$		**140**
Adjusted Allowable perpendicular Int. bearing Stress (psi)		
$F'_{perp\text{-}c}=F_{perp\text{-}c} \times C_M \times C_t \times C_i \times C_b$		**705**
Adjusted Allowable End perpendicular bearing Stress (psi)		
$F'_{perp\text{-}c}=F_{perp\text{-}c} \times C_M \times C_t \times C_i \times C_b$		**705**

Demand Moment (lbs-ft)			4313.151		
Demand Shear (lbs)			828.125		
Interior Demand Reaction R (lbs)					
End Demand Reaction R (lbs)			828.125		
Member Properties:					
Exist Width b (in)	1.75	Exist Depth d (in)	13		
New Width b (in)	0	New Depth d (in)	0		
Section Modulus (in^3)			49.29		0.00
Moment of Inertia Strong-Axis (in^4)			320.40		0.00
Moment of Inertia Weak-Axis (in^4)			5.81		0.00
Number of Plies			1		0
Interior Perpemdicular Bearing Width (in)			5.5		
End Perpemdicular Bearing Width (in)			5.5		
Demand Bending Stress (psi)					
fb = M/S			**1050**		OK
Demand Shear Stress (psi)					
fv=1.5 x (V/bd)			**55**		OK
Demand Interior Perpendicular Bearing Stress (psi)					
fPerp-c= (R/bd_b)			**0**		OK
Demand End Perpendicular Bearing Stress (psi)					
fPerp-c= (R/bd_b)			**86**		OK

Project Name:	Glynn Archer School	Project Code	
Member Information:	2nd floor joist - 2B6 (SINGLE SPAN)	Date:	

Members Bending stress F_b (psi)		1500
Members Shear stress F_v (psi)		175
Members Perpendicular Bearing Stress		825
Load duration Factor C_D		1
Wet Service Factor C_M		1
temperature Factor C_t		1
Beam Stability Factor CL		1
Size Factor C_F		1
Flat Use Factor C_{fu}		1
Incising Factor Ci		0.8
Repetitive Member Factor C_r		1.15
Interior Bearing Arear Factor C_b		1.07
End Bearing Arear Factor C_b		1.07
Adjusted Allowable Bending Stress (psi)		
$F'_b=F_b \times C_D \times C_M \times C_t \times C_L \times C_F \times C_{fu} \times C_i \times C_r$		**1380**
Adjusted Allowable Shear Stress (psi)		
$F'_v=F_v \times C_D \times C_M \times C_t \times C_F \times C_{fu} \times C_i$		**140**
Adjusted Allowable perpendicular Int. bearing Stress (psi)		
$F'_{perp\text{-}c}=F_{perp\text{-}c} \times C_M \times C_t \times C_i \times C_b$		**705**
Adjusted Allowable End perpendicular bearing Stress (psi)		
$F'_{perp\text{-}c}=F_{perp\text{-}c} \times C_M \times C_t \times C_i \times C_b$		**705**

Demand Moment (lbs-ft)			5256.938		
Demand Shear (lbs)			914.25		
Interior Demand Reaction R (lbs)					
End Demand Reaction R (lbs)			914.25		
Member Properties:					
Exist Width b (in)	1.75	Exist Depth d (in)	13		
New Width b (in)	0	New Depth d (in)	0		
Section Modulus (in^3)			49.29		0.00
Moment of Inertia Strong-Axis (in^4)			320.40		0.00
Moment of Inertia Weak-Axis (in^4)			5.81		0.00
Number of Plies			1		0
Interior Perpemdicular Bearing Width (in)			5.5		
End Perpemdicular Bearing Width (in)			5.5		
Demand Bending Stress (psi)					
fb = M/S			**1280**		OK
Demand Shear Stress (psi)					
fv=1.5 x (V/bd)			**60**		OK
Demand Interior Perpendicular Bearing Stress (psi)					
fPerp-c= (R/bd_b)			**0**		OK
Demand End Perpendicular Bearing Stress (psi)					
fPerp-c= (R/bd_b)			**95**		OK

Project Name:	Glynn Archer School	Project Code	
Member Information:	2nd floor joist - 2B7 (SINGLE SPAN)	Date:	

Members Bending stress F_b (psi)		1500
Members Shear stress F_v (psi)		175
Members Perpendicular Bearing Stress		825
Load duration Factor C_D		1
Wet Service Factor C_M		1
temperature Factor C_t		1
Beam Stability Factor CL		1
Size Factor C_F		1
Flat Use Factor C_{fu}		1
Incising Factor Ci		0.8
Repetitive Member Factor C_r		1.15
Interior Bearing Arear Factor C_b		1.07
End Bearing Arear Factor C_b		1.07
Adjusted Allowable Bending Stress (psi)		
$F'_b=F_b \times C_D \times C_M \times C_t \times C_L \times C_F \times C_{fu} \times C_i \times C_r$		**1380**
Adjusted Allowable Shear Stress (psi)		
$F'_v=F_v \times C_D \times C_M \times C_t \times C_F \times C_{fu} \times C_i$		**140**
Adjusted Allowable perpendicular Int. bearing Stress (psi)		
$F'_{perp\text{-}c}=F_{perp\text{-}c} \times C_M \times C_t \times C_i \times C_b$		**705**
Adjusted Allowable End perpendicular bearing Stress (psi)		
$F'_{perp\text{-}c}=F_{perp\text{-}c} \times C_M \times C_t \times C_i \times C_b$		**705**

Demand Moment (lbs-ft)			4313.151		
Demand Shear (lbs)			828.125		
Interior Demand Reaction R (lbs)					
End Demand Reaction R (lbs)			828.125		
Member Properties:					
Exist Width b (in)	1.75	Exist Depth d (in)	13		
New Width b (in)	0	New Depth d (in)	0		
Section Modulus (in^3)			49.29		0.00
Moment of Inertia Strong-Axis (in^4)			320.40		0.00
Moment of Inertia Weak-Axis (in^4)			5.81		0.00
Number of Plies			1		0
Interior Perpemdicular Bearing Width (in)			5.5		
End Perpemdicular Bearing Width (in)			5.5		
Demand Bending Stress (psi)					
fb = M/S			**1050**		OK
Demand Shear Stress (psi)					
fv=1.5 x (V/bd)			**55**		OK
Demand Interior Perpendicular Bearing Stress (psi)					
fPerp-c= (R/bd_b)			**0**		OK
Demand End Perpendicular Bearing Stress (psi)					
fPerp-c= (R/bd_b)			**86**		OK

Project Name:	Glynn Archer School	Project Code	
Member Information:	2nd floor joist - 2B8 (SINGLE SPAN)	Date:	

Members Bending stress F_b (psi)		1500
Members Shear stress F_v (psi)		175
Members Perpendicular Bearing Stress		825
Load duration Factor C_D		1
Wet Service Factor C_M		1
temperature Factor C_t		1
Beam Stability Factor CL		1
Size Factor C_F		1
Flat Use Factor C_{fu}		1
Incising Factor Ci		0.8
Repetitive Member Factor C_r		1.15
Interior Bearing Arear Factor C_b		1.07
End Bearing Arear Factor C_b		1.07
Adjusted Allowable Bending Stress (psi)		
$F'_b=F_b \times C_D \times C_M \times C_t \times C_L \times C_F \times C_{fu} \times C_i \times C_r$		**1380**
Adjusted Allowable Shear Stress (psi)		
$F'_v=F_v \times C_D \times C_M \times C_t \times C_F \times C_{fu} \times C_i$		**140**
Adjusted Allowable perpendicular Int. bearing Stress (psi)		
$F'_{perp\text{-}c}=F_{perp\text{-}c} \times C_M \times C_t \times C_i \times C_b$		**705**
Adjusted Allowable End perpendicular bearing Stress (psi)		
$F'_{perp\text{-}c}=F_{perp\text{-}c} \times C_M \times C_t \times C_i \times C_b$		**705**

Demand Moment (lbs-ft)			1998.47		
Demand Shear (lbs)			661.5625		
Interior Demand Reaction R (lbs)					
End Demand Reaction R (lbs)			661.5625		
Member Properties:					
Exist Width b (in)	1.75	Exist Depth d (in)	13		
New Width b (in)	0	New Depth d (in)	0		
Section Modulus (in^3)			49.29		0.00
Moment of Inertia Strong-Axis (in^4)			320.40		0.00
Moment of Inertia Weak-Axis (in^4)			5.81		0.00
Number of Plies			1		0
Interior Perpemdicular Bearing Width (in)			5.5		
End Perpemdicular Bearing Width (in)			5.5		
Demand Bending Stress (psi)					
fb = M/S			**487**		OK
Demand Shear Stress (psi)					
fv=1.5 x (V/bd)			**44**		OK
Demand Interior Perpendicular Bearing Stress (psi)					
fPerp-c= (R/bd_b)			**0**		OK
Demand End Perpendicular Bearing Stress (psi)					
fPerp-c= (R/bd_b)			**69**		OK

Project Name:	Glynn Archer School	Project Code	
Member Information:	2nd floor joist - 2A1 (SINGLE SPAN)	Date:	

Members Bending stress F_b (psi)		1500
Members Shear stress F_v (psi)		175
Members Perpendicular Bearing Stress		825
Load duration Factor C_D		1
Wet Service Factor C_M		1
temperature Factor C_t		1
Beam Stability Factor CL		1
Size Factor C_F		1
Flat Use Factor C_{fu}		1
Incising Factor Ci		0.8
Repetitive Member Factor C_r		1.15
Interior Bearing Arear Factor C_b		1.07
End Bearing Arear Factor C_b		1.19
Adjusted Allowable Bending Stress (psi)		
$F'_b=F_b \times C_D \times C_M \times C_t \times C_L \times C_F \times C_{fu} \times C_i \times C_r$		**1380**
Adjusted Allowable Shear Stress (psi)		
$F'_v=F_v \times C_D \times C_M \times C_t \times C_F \times C_{fu} \times C_i$		**140**
Adjusted Allowable perpendicular Int. bearing Stress (psi)		
$F'_{perp\text{-}c}=F_{perp\text{-}c} \times C_M \times C_t \times C_i \times C_b$		**705**
Adjusted Allowable End perpendicular bearing Stress (psi)		
$F'_{perp\text{-}c}=F_{perp\text{-}c} \times C_M \times C_t \times C_i \times C_b$		**784**

Demand Moment (lbs-ft)			5843.25		
Demand Shear (lbs)			1113		
Interior Demand Reaction R (lbs)					
End Demand Reaction R (lbs)			1113		
Member Properties:					
Exist Width b (in)	1.75	Exist Depth d (in)	13.5		
New Width b (in)	0	New Depth d (in)	0		
Section Modulus (in^3)			53.16		0.00
Moment of Inertia Strong-Axis (in^4)			358.80		0.00
Moment of Inertia Weak-Axis (in^4)			6.03		0.00
Number of Plies			1		0
Interior Perpemdicular Bearing Width (in)			5.5		
End Perpemdicular Bearing Width (in)			2		
Demand Bending Stress (psi)					
fb = M/S			**1319**		OK
Demand Shear Stress (psi)					
fv=1.5 x (V/bd)			**71**		OK
Demand Interior Perpendicular Bearing Stress (psi)					
fPerp-c= (R/bd_b)			**0**		OK
Demand End Perpendicular Bearing Stress (psi)					
fPerp-c= (R/bd_b)			**318**		OK

Project Name:	Glynn Archer School	Project Code	
Member Information:	2nd floor joist - 2A2 (SINGLE SPAN)	Date:	

Members Bending stress F_b (psi)		1500
Members Shear stress F_v (psi)		175
Members Perpendicular Bearing Stress		825
Load duration Factor C_D		1
Wet Service Factor C_M		1
temperature Factor C_t		1
Beam Stability Factor CL		1
Size Factor C_F		1
Flat Use Factor C_{fu}		1
Incising Factor Ci		0.8
Repetitive Member Factor C_r		1.15
Interior Bearing Arear Factor C_b		1.07
End Bearing Arear Factor C_b		1.19
Adjusted Allowable Bending Stress (psi)		
$F'_b=F_b \times C_D \times C_M \times C_t \times C_L \times C_F \times C_{fu} \times C_i \times C_r$		**1380**
Adjusted Allowable Shear Stress (psi)		
$F'_v=F_v \times C_D \times C_M \times C_t \times C_F \times C_{fu} \times C_i$		**140**
Adjusted Allowable perpendicular Int. bearing Stress (psi)		
$F'_{perp\text{-}c}=F_{perp\text{-}c} \times C_M \times C_t \times C_i \times C_b$		**705**
Adjusted Allowable End perpendicular bearing Stress (psi)		
$F'_{perp\text{-}c}=F_{perp\text{-}c} \times C_M \times C_t \times C_i \times C_b$		**784**

Demand Moment (lbs-ft)			5983.20		
Demand Shear (lbs)			1126.25		
Interior Demand Reaction R (lbs)					
End Demand Reaction R (lbs)			1126.25		
Member Properties:					
Exist Width b (in)	1.75	Exist Depth d (in)	13.5		
New Width b (in)	0	New Depth d (in)	0		
Section Modulus (in^3)			53.16		0.00
Moment of Inertia Strong-Axis (in^4)			358.80		0.00
Moment of Inertia Weak-Axis (in^4)			6.03		0.00
Number of Plies			1		0
Interior Perpemdicular Bearing Width (in)			5.5		
End Perpemdicular Bearing Width (in)			2		
Demand Bending Stress (psi)					
fb = M/S			**1351**		OK
Demand Shear Stress (psi)					
fv=1.5 x (V/bd)			**72**		OK
Demand Interior Perpendicular Bearing Stress (psi)					
fPerp-c= (R/bd_b)			**0**		OK
Demand End Perpendicular Bearing Stress (psi)					
fPerp-c= (R/bd_b)			**322**		OK

Project Name:	Glynn Archer School	Project Code	
Member Information:	2nd floor joist - 2A3 (SINGLE SPAN)	Date:	

Members Bending stress F_b (psi)		1500
Members Shear stress F_v (psi)		175
Members Perpendicular Bearing Stress		825
Load duration Factor C_D		1
Wet Service Factor C_M		1
temperature Factor C_t		1
Beam Stability Factor CL		1
Size Factor C_F		1
Flat Use Factor C_{fu}		1
Incising Factor Ci		0.8
Repetitive Member Factor C_r		1.15
Interior Bearing Arear Factor C_b		1.07
End Bearing Arear Factor C_b		1.19
Adjusted Allowable Bending Stress (psi)		
$F'_b=F_b \times C_D \times C_M \times C_t \times C_L \times C_F \times C_{fu} \times C_i \times C_r$		**1380**
Adjusted Allowable Shear Stress (psi)		
$F'_v=F_v \times C_D \times C_M \times C_t \times C_F \times C_{fu} \times C_i$		**140**
Adjusted Allowable perpendicular Int. bearing Stress (psi)		
$F'_{perp\text{-}c}=F_{perp\text{-}c} \times C_M \times C_t \times C_i \times C_b$		**705**
Adjusted Allowable End perpendicular bearing Stress (psi)		
$F'_{perp\text{-}c}=F_{perp\text{-}c} \times C_M \times C_t \times C_i \times C_b$		**784**

Demand Moment (lbs-ft)			5983.20		
Demand Shear (lbs)			1126.25		
Interior Demand Reaction R (lbs)					
End Demand Reaction R (lbs)			1126.25		
Member Properties:					
Exist Width b (in)	1.75	Exist Depth d (in)	13.5		
New Width b (in)	0	New Depth d (in)	0		
Section Modulus (in^3)			53.16		0.00
Moment of Inertia Strong-Axis (in^4)			358.80		0.00
Moment of Inertia Weak-Axis (in^4)			6.03		0.00
Number of Plies			1		0
Interior Perpemdicular Bearing Width (in)			5.5		
End Perpemdicular Bearing Width (in)			2		
Demand Bending Stress (psi)					
fb = M/S			**1351**		OK
Demand Shear Stress (psi)					
fv=1.5 x (V/bd)			**72**		OK
Demand Interior Perpendicular Bearing Stress (psi)					
fPerp-c= (R/bd_b)			**0**		OK
Demand End Perpendicular Bearing Stress (psi)					
fPerp-c= (R/bd_b)			**322**		OK

Project Name:	Glynn Archer School	Project Code	
Member Information:	2nd floor joist - 2A4 (SINGLE SPAN)	Date:	

Members Bending stress F_b (psi)		1500
Members Shear stress F_v (psi)		175
Members Perpendicular Bearing Stress		825
Load duration Factor C_D		1
Wet Service Factor C_M		1
temperature Factor C_t		1
Beam Stability Factor CL		1
Size Factor C_F		1
Flat Use Factor C_{fu}		1
Incising Factor Ci		0.8
Repetitive Member Factor C_r		1.15
Interior Bearing Arear Factor C_b		1.07
End Bearing Arear Factor C_b		1.19
Adjusted Allowable Bending Stress (psi)		
$F'_b=F_b \times C_D \times C_M \times C_t \times C_L \times C_F \times C_{fu} \times C_i \times C_r$		**1380**
Adjusted Allowable Shear Stress (psi)		
$F'_v=F_v \times C_D \times C_M \times C_t \times C_F \times C_{fu} \times C_i$		**140**
Adjusted Allowable perpendicular Int. bearing Stress (psi)		
$F'_{perp\text{-}c}=F_{perp\text{-}c} \times C_M \times C_t \times C_i \times C_b$		**705**
Adjusted Allowable End perpendicular bearing Stress (psi)		
$F'_{perp\text{-}c}=F_{perp\text{-}c} \times C_M \times C_t \times C_i \times C_b$		**784**

Demand Moment (lbs-ft)			2535.53		
Demand Shear (lbs)			733.17		
Interior Demand Reaction R (lbs)					
End Demand Reaction R (lbs)			733.1667		
Member Properties:					
Exist Width b (in)	1.75	Exist Depth d (in)	13.5		
New Width b (in)	0	New Depth d (in)	0		
Section Modulus (in^3)			53.16		0.00
Moment of Inertia Strong-Axis (in^4)			358.80		0.00
Moment of Inertia Weak-Axis (in^4)			6.03		0.00
Number of Plies			1		0
Interior Perpemdicular Bearing Width (in)			5.5		
End Perpemdicular Bearing Width (in)			2		
Demand Bending Stress (psi)					
fb = M/S			**572**		OK
Demand Shear Stress (psi)					
fv=1.5 x (V/bd)			**47**		OK
Demand Interior Perpendicular Bearing Stress (psi)					
fPerp-c= (R/bd_b)			**0**		OK
Demand End Perpendicular Bearing Stress (psi)					
fPerp-c= (R/bd_b)			**209**		OK

Project Name:	Glynn Archer School	Project Code	
Member Information:	2nd floor joist - 2A5 (SINGLE SPAN)	Date:	

Members Bending stress F_b (psi)		1500
Members Shear stress F_v (psi)		175
Members Perpendicular Bearing Stress		825
Load duration Factor C_D		1
Wet Service Factor C_M		1
temperature Factor C_t		1
Beam Stability Factor CL		1
Size Factor C_F		1
Flat Use Factor C_{fu}		1
Incising Factor Ci		0.8
Repetitive Member Factor C_r		1.15
Interior Bearing Arear Factor C_b		1.07
End Bearing Arear Factor C_b		1.19
Adjusted Allowable Bending Stress (psi)		
$F'_b=F_b \times C_D \times C_M \times C_t \times C_L \times C_F \times C_{fu} \times C_i \times C_r$		**1380**
Adjusted Allowable Shear Stress (psi)		
$F'_v=F_v \times C_D \times C_M \times C_t \times C_F \times C_{fu} \times C_i$		**140**
Adjusted Allowable perpendicular Int. bearing Stress (psi)		
$F'_{perp\text{-}c}=F_{perp\text{-}c} \times C_M \times C_t \times C_i \times C_b$		**705**
Adjusted Allowable End perpendicular bearing Stress (psi)		
$F'_{perp\text{-}c}=F_{perp\text{-}c} \times C_M \times C_t \times C_i \times C_b$		**784**

Demand Moment (lbs-ft)			5983.20		
Demand Shear (lbs)			1126.25		
Interior Demand Reaction R (lbs)					
End Demand Reaction R (lbs)			1126.25		
Member Properties:					
Exist Width b (in)	1.75	Exist Depth d (in)	13.5		
New Width b (in)	0	New Depth d (in)	0		
Section Modulus (in^3)			53.16		0.00
Moment of Inertia Strong-Axis (in^4)			358.80		0.00
Moment of Inertia Weak-Axis (in^4)			6.03		0.00
Number of Plies			1		0
Interior Perpemdicular Bearing Width (in)			5.5		
End Perpemdicular Bearing Width (in)			2		
Demand Bending Stress (psi)					
fb = M/S			**1351**		OK
Demand Shear Stress (psi)					
fv=1.5 x (V/bd)			**72**		OK
Demand Interior Perpendicular Bearing Stress (psi)					
fPerp-c= (R/bd_b)			**0**		OK
Demand End Perpendicular Bearing Stress (psi)					
fPerp-c= (R/bd_b)			**322**		OK

Project Name:	Glynn Archer School	Project Code	
Member Information:	2nd floor joist - 2A6 (SINGLE SPAN)	Date:	

Members Bending stress F_b (psi)		1500
Members Shear stress F_v (psi)		175
Members Perpendicular Bearing Stress		825
Load duration Factor C_D		1
Wet Service Factor C_M		1
temperature Factor C_t		1
Beam Stability Factor CL		1
Size Factor C_F		1
Flat Use Factor C_{fu}		1
Incising Factor Ci		0.8
Repetitive Member Factor C_r		1.15
Interior Bearing Arear Factor C_b		1.07
End Bearing Arear Factor C_b		1.19
Adjusted Allowable Bending Stress (psi)		
$F'_b=F_b \times C_D \times C_M \times C_t \times C_L \times C_F \times C_{fu} \times C_i \times C_r$		**1380**
Adjusted Allowable Shear Stress (psi)		
$F'_v=F_v \times C_D \times C_M \times C_t \times C_F \times C_{fu} \times C_i$		**140**
Adjusted Allowable perpendicular Int. bearing Stress (psi)		
$F'_{perp\text{-}c}=F_{perp\text{-}c} \times C_M \times C_t \times C_i \times C_b$		**705**
Adjusted Allowable End perpendicular bearing Stress (psi)		
$F'_{perp\text{-}c}=F_{perp\text{-}c} \times C_M \times C_t \times C_i \times C_b$		**784**

Demand Moment (lbs-ft)			5889.72		
Demand Shear (lbs)			1117.42		
Interior Demand Reaction R (lbs)					
End Demand Reaction R (lbs)			1117.417		
Member Properties:					
Exist Width b (in)	1.75	Exist Depth d (in)	13.5		
New Width b (in)	0	New Depth d (in)	0		
Section Modulus (in^3)			53.16		0.00
Moment of Inertia Strong-Axis (in^4)			358.80		0.00
Moment of Inertia Weak-Axis (in^4)			6.03		0.00
Number of Plies			1		0
Interior Perpemdicular Bearing Width (in)			5.5		
End Perpemdicular Bearing Width (in)			2		
Demand Bending Stress (psi)					
fb = M/S			**1330**		OK
Demand Shear Stress (psi)					
fv=1.5 x (V/bd)			**71**		OK
Demand Interior Perpendicular Bearing Stress (psi)					
fPerp-c= (R/bd_b)			**0**		OK
Demand End Perpendicular Bearing Stress (psi)					
fPerp-c= (R/bd_b)			**319**		OK

Project Name:	Glynn Archer School	Project Code	
Member Information:	2nd floor joist - 2A7 (SINGLE SPAN)	Date:	

Members Bending stress F_b (psi)		1500
Members Shear stress F_v (psi)		175
Members Perpendicular Bearing Stress		825
Load duration Factor C_D		1
Wet Service Factor C_M		1
temperature Factor C_t		1
Beam Stability Factor CL		1
Size Factor C_F		1
Flat Use Factor C_{fu}		1
Incising Factor Ci		0.8
Repetitive Member Factor C_r		1.15
Interior Bearing Arear Factor C_b		1.07
End Bearing Arear Factor C_b		1.19
Adjusted Allowable Bending Stress (psi)		
$F'_b=F_b \times C_D \times C_M \times C_t \times C_L \times C_F \times C_{fu} \times C_i \times C_r$		**1380**
Adjusted Allowable Shear Stress (psi)		
$F'_v=F_v \times C_D \times C_M \times C_t \times C_F \times C_{fu} \times C_i$		**140**
Adjusted Allowable perpendicular Int. bearing Stress (psi)		
$F'_{perp\text{-}c}=F_{perp\text{-}c} \times C_M \times C_t \times C_i \times C_b$		**705**
Adjusted Allowable End perpendicular bearing Stress (psi)		
$F'_{perp\text{-}c}=F_{perp\text{-}c} \times C_M \times C_t \times C_i \times C_b$		**784**

Demand Moment (lbs-ft)			2555.51		
Demand Shear (lbs)			863.83		
Interior Demand Reaction R (lbs)					
End Demand Reaction R (lbs)			863.8333		
Member Properties:					
Exist Width b (in)	1.75	Exist Depth d (in)	13.5		
New Width b (in)	0	New Depth d (in)	0		
Section Modulus (in^3)			53.16		0.00
Moment of Inertia Strong-Axis (in^4)			358.80		0.00
Moment of Inertia Weak-Axis (in^4)			6.03		0.00
Number of Plies			1		0
Interior Perpemdicular Bearing Width (in)			5.5		
End Perpemdicular Bearing Width (in)			2		
Demand Bending Stress (psi)					
fb = M/S			**577**		OK
Demand Shear Stress (psi)					
fv=1.5 x (V/bd)			**55**		OK
Demand Interior Perpendicular Bearing Stress (psi)					
fPerp-c= (R/bd_b)			**0**		OK
Demand End Perpendicular Bearing Stress (psi)					
fPerp-c= (R/bd_b)			**247**		OK

Project Name:	Glynn Archer School	Project Code	
Member Information:	2nd floor joist - 2A8 (SINGLE SPAN)	Date:	

Members Bending stress F_b (psi)		1500
Members Shear stress F_v (psi)		175
Members Perpendicular Bearing Stress		825
Load duration Factor C_D		1
Wet Service Factor C_M		1
temperature Factor C_t		1
Beam Stability Factor CL		1
Size Factor C_F		1
Flat Use Factor C_{fu}		1
Incising Factor Ci		0.8
Repetitive Member Factor C_r		1.15
Interior Bearing Arear Factor C_b		1.07
End Bearing Arear Factor C_b		1.19
Adjusted Allowable Bending Stress (psi)		
$F'_b=F_b \times C_D \times C_M \times C_t \times C_L \times C_F \times C_{fu} \times C_i \times C_r$		**1380**
Adjusted Allowable Shear Stress (psi)		
$F'_v=F_v \times C_D \times C_M \times C_t \times C_F \times C_{fu} \times C_i$		**140**
Adjusted Allowable perpendicular Int. bearing Stress (psi)		
$F'_{perp\text{-}c}=F_{perp\text{-}c} \times C_M \times C_t \times C_i \times C_b$		**705**
Adjusted Allowable End perpendicular bearing Stress (psi)		
$F'_{perp\text{-}c}=F_{perp\text{-}c} \times C_M \times C_t \times C_i \times C_b$		**784**

Demand Moment (lbs-ft)			5889.72		
Demand Shear (lbs)			1117.42		
Interior Demand Reaction R (lbs)					
End Demand Reaction R (lbs)			1117.417		
Member Properties:					
Exist Width b (in)	1.75	Exist Depth d (in)	13.5		
New Width b (in)	0	New Depth d (in)	0		
Section Modulus (in^3)			53.16		0.00
Moment of Inertia Strong-Axis (in^4)			358.80		0.00
Moment of Inertia Weak-Axis (in^4)			6.03		0.00
Number of Plies			1		0
Interior Perpemdicular Bearing Width (in)			5.5		
End Perpemdicular Bearing Width (in)			2		
Demand Bending Stress (psi)					
fb = M/S			**1330**		OK
Demand Shear Stress (psi)					
fv=1.5 x (V/bd)			**71**		OK
Demand Interior Perpendicular Bearing Stress (psi)					
fPerp-c= (R/bd_b)			**0**		OK
Demand End Perpendicular Bearing Stress (psi)					
fPerp-c= (R/bd_b)			**319**		OK

Project Name:	Glynn Archer School	Project Code	
Member Information:	2nd floor joist - 2A9 (SINGLE SPAN)	Date:	

Members Bending stress F_b (psi)		1500
Members Shear stress F_v (psi)		175
Members Perpendicular Bearing Stress		825
Load duration Factor C_D		1
Wet Service Factor C_M		1
temperature Factor C_t		1
Beam Stability Factor CL		1
Size Factor C_F		1
Flat Use Factor C_{fu}		1
Incising Factor Ci		0.8
Repetitive Member Factor C_r		1.15
Interior Bearing Arear Factor C_b		1.07
End Bearing Arear Factor C_b		1.19
Adjusted Allowable Bending Stress (psi)		
$F'_b=F_b \times C_D \times C_M \times C_t \times C_L \times C_F \times C_{fu} \times C_i \times C_r$		**1380**
Adjusted Allowable Shear Stress (psi)		
$F'_v=F_v \times C_D \times C_M \times C_t \times C_F \times C_{fu} \times C_i$		**140**
Adjusted Allowable perpendicular Int. bearing Stress (psi)		
$F'_{perp\text{-}c}=F_{perp\text{-}c} \times C_M \times C_t \times C_i \times C_b$		**705**
Adjusted Allowable End perpendicular bearing Stress (psi)		
$F'_{perp\text{-}c}=F_{perp\text{-}c} \times C_M \times C_t \times C_i \times C_b$		**784**

Demand Moment (lbs-ft)			5983.20		
Demand Shear (lbs)			1126.25		
Interior Demand Reaction R (lbs)					
End Demand Reaction R (lbs)			1126.25		
Member Properties:					
Exist Width b (in)	1.75	Exist Depth d (in)	13.5		
New Width b (in)	0	New Depth d (in)	0		
Section Modulus (in^3)			53.16		0.00
Moment of Inertia Strong-Axis (in^4)			358.80		0.00
Moment of Inertia Weak-Axis (in^4)			6.03		0.00
Number of Plies			1		0
Interior Perpemdicular Bearing Width (in)			5.5		
End Perpemdicular Bearing Width (in)			2		
Demand Bending Stress (psi)					
fb = M/S			**1351**		OK
Demand Shear Stress (psi)					
fv=1.5 x (V/bd)			**72**		OK
Demand Interior Perpendicular Bearing Stress (psi)					
fPerp-c= (R/bd_b)			**0**		OK
Demand End Perpendicular Bearing Stress (psi)					
fPerp-c= (R/bd_b)			**322**		OK

Project Name:	Glynn Archer School	Project Code	
Member Information:	2nd floor joist - 2A10 (SINGLE SPAN)	Date:	

Members Bending stress F_b (psi)		1500
Members Shear stress F_v (psi)		175
Members Perpendicular Bearing Stress		825
Load duration Factor C_D		1
Wet Service Factor C_M		1
temperature Factor C_t		1
Beam Stability Factor CL		1
Size Factor C_F		1
Flat Use Factor C_{fu}		1
Incising Factor Ci		0.8
Repetitive Member Factor C_r		1.15
Interior Bearing Arear Factor C_b		1.07
End Bearing Arear Factor C_b		1.19
Adjusted Allowable Bending Stress (psi)		
$F'_b=F_b \times C_D \times C_M \times C_t \times C_L \times C_F \times C_{fu} \times C_i \times C_r$		**1380**
Adjusted Allowable Shear Stress (psi)		
$F'_v=F_v \times C_D \times C_M \times C_t \times C_F \times C_{fu} \times C_i$		**140**
Adjusted Allowable perpendicular Int. bearing Stress (psi)		
$F'_{perp\text{-}c}=F_{perp\text{-}c} \times C_M \times C_t \times C_i \times C_b$		**705**
Adjusted Allowable End perpendicular bearing Stress (psi)		
$F'_{perp\text{-}c}=F_{perp\text{-}c} \times C_M \times C_t \times C_i \times C_b$		**784**

Demand Moment (lbs-ft)			2738.64		
Demand Shear (lbs)			894.25		
Interior Demand Reaction R (lbs)					
End Demand Reaction R (lbs)			894.25		
Member Properties:					
Exist Width b (in)	1.75	Exist Depth d (in)	13.5		
New Width b (in)	0	New Depth d (in)	0		
Section Modulus (in^3)			53.16		0.00
Moment of Inertia Strong-Axis (in^4)			358.80		0.00
Moment of Inertia Weak-Axis (in^4)			6.03		0.00
Number of Plies			1		0
Interior Perpemdicular Bearing Width (in)			5.5		
End Perpemdicular Bearing Width (in)			2		
Demand Bending Stress (psi)					
fb = M/S			**618**		OK
Demand Shear Stress (psi)					
fv=1.5 x (V/bd)			**57**		OK
Demand Interior Perpendicular Bearing Stress (psi)					
fPerp-c= (R/bd_b)			**0**		OK
Demand End Perpendicular Bearing Stress (psi)					
fPerp-c= (R/bd_b)			**256**		OK

Project Name:	Glynn Archer School	Project Code	
Member Information:		Date:	

First floor joist double span over the officer area 11'-10" Max.

Members Bending stress F_b (psi)		1500
Members Shear stress F_v (psi)		175
Members Perpendicular Bearing Stress		825
Load duration Factor C_D		1
Wet Service Factor C_M		1
temperature Factor C_t		1
Beam Stability Factor CL		1
Size Factor C_F		1
Flat Use Factor C_{fu}		1
Incising Factor Ci		0.8
Repetitive Member Factor C_r		1.15
Interior Bearing Arear Factor C_b		1.23
End Bearing Arear Factor C_b		1.19
Adjusted Allowable Bending Stress (psi)		
$F'_b=F_b \times C_D \times C_M \times C_t \times C_L \times C_F \times C_{fu} \times C_i \times C_r$		**1380**
Adjusted Allowable Shear Stress (psi)		
$F'_v=F_v \times C_D \times C_M \times C_t \times C_F \times C_{fu} \times C_i$		**140**
Adjusted Allowable perpendicular Int. bearing Stress (psi)		
$F'_{perp\text{-}c}=F_{perp\text{-}c} \times C_M \times C_t \times C_i \times C_b$		**812**
Adjusted Allowable End perpendicular bearing Stress (psi)		
$F'_{perp\text{-}c}=F_{perp\text{-}c} \times C_M \times C_t \times C_i \times C_b$		**784**

Demand Moment (lbs-ft)			854.44		
Demand Shear (lbs)			325.50		
Interior Demand Reaction R (lbs)					
End Demand Reaction R (lbs)			325.50		
Member Properties:					
Exist Width b (in)	1.63	Exist Depth d (in)	5.50		
New Width b (in)	0	New Depth d (in)	0		
Section Modulus (in^3)			8.19		0.00
Moment of Inertia Strong-Axis (in^4)			22.53		0.00
Moment of Inertia Weak-Axis (in^4)			1.97		0.00
Number of Plies			1		0
Interior Perpemdicular Bearing Width (in)			1.625		
End Perpemdicular Bearing Width (in)			2		
Demand Bending Stress (psi)					
fb = M/S			**1252**		OK
Demand Shear Stress (psi)					
fv=1.5 x (V/bd)			**55**		OK
Demand Interior Perpendicular Bearing Stress (psi)					
fPerp-c= (R/bd_b)			**0**		OK
Demand End Perpendicular Bearing Stress (psi)					
fPerp-c= (R/bd_b)			**100**		OK

Project Name:	Glynn Archer School	Project Code	
Member Information:		Date:	

First floor joist double span over the officer area 11'-10" Max.

Members Bending stress F_b (psi)		1500
Members Shear stress F_v (psi)		175
Members Perpendicular Bearing Stress		825
Load duration Factor C_D		1
Wet Service Factor C_M		1
temperature Factor C_t		1
Beam Stability Factor CL		1
Size Factor C_F		1
Flat Use Factor C_{fu}		1
Incising Factor Ci		0.8
Repetitive Member Factor C_r		1.15
Interior Bearing Arear Factor C_b		1.23
End Bearing Arear Factor C_b		1.23
Adjusted Allowable Bending Stress (psi)		
$F'_b=F_b \times C_D \times C_M \times C_t \times C_L \times C_F \times C_{fu} \times C_i \times C_r$		**1380**
Adjusted Allowable Shear Stress (psi)		
$F'_v=F_v \times C_D \times C_M \times C_t \times C_F \times C_{fu} \times C_i$		**140**
Adjusted Allowable perpendicular Int. bearing Stress (psi)		
$F'_{perp\text{-}c}=F_{perp\text{-}c} \times C_M \times C_t \times C_i \times C_b$		**812**
Adjusted Allowable End perpendicular bearing Stress (psi)		
$F'_{perp\text{-}c}=F_{perp\text{-}c} \times C_M \times C_t \times C_i \times C_b$		**812**

Demand Moment (lbs-ft)			559.94		
Demand Shear (lbs)			263.50		
Interior Demand Reaction R (lbs)			527.00		
End Demand Reaction R (lbs)			263.50		
Member Properties:					
Exist Width b (in)	1.63	Exist Depth d (in)	5.50		
New Width b (in)	0	New Depth d (in)	0		
Section Modulus (in^3)			8.19		0.00
Moment of Inertia Strong-Axis (in^4)			22.53		0.00
Moment of Inertia Weak-Axis (in^4)			1.97		0.00
Number of Plies			1		0
Interior Perpemdicular Bearing Width (in)			1.625		
End Perpemdicular Bearing Width (in)			1.625		
Demand Bending Stress (psi)					
fb = M/S			**820**		OK
Demand Shear Stress (psi)					
fv=1.5 x (V/bd)			**44**		OK
Demand Interior Perpendicular Bearing Stress (psi)					
fPerp-c= (R/bd_b)			**200**		OK
Demand End Perpendicular Bearing Stress (psi)					
fPerp-c= (R/bd_b)			**100**		OK

Project Name:	Glynn Archer School	Project Code	
Member Information:		Date:	

First floor joist double span over the officer area 11'-10" Max.

Members Bending stress F_b (psi)		1500
Members Shear stress F_v (psi)		175
Members Perpendicular Bearing Stress		825
Load duration Factor C_D		1
Wet Service Factor C_M		1
temperature Factor C_t		1
Beam Stability Factor CL		1
Size Factor C_F		1
Flat Use Factor C_{fu}		1
Incising Factor Ci		0.8
Repetitive Member Factor C_r		1.15
Interior Bearing Arear Factor C_b		1.23
End Bearing Arear Factor C_b		1.23
Adjusted Allowable Bending Stress (psi)		
$F'_b=F_b \times C_D \times C_M \times C_t \times C_L \times C_F \times C_{fu} \times C_i \times C_r$		**1380**
Adjusted Allowable Shear Stress (psi)		
$F'_v=F_v \times C_D \times C_M \times C_t \times C_F \times C_{fu} \times C_i$		**140**
Adjusted Allowable perpendicular Int. bearing Stress (psi)		
$F'_{perp\text{-}c}=F_{perp\text{-}c} \times C_M \times C_t \times C_i \times C_b$		**812**
Adjusted Allowable End perpendicular bearing Stress (psi)		
$F'_{perp\text{-}c}=F_{perp\text{-}c} \times C_M \times C_t \times C_i \times C_b$		**812**

Demand Moment (lbs-ft)			559.94		
Demand Shear (lbs)			263.50		
Interior Demand Reaction R (lbs)			527.00		
End Demand Reaction R (lbs)			263.50		
Member Properties:					
Exist Width b (in)	1.63	Exist Depth d (in)	5.50		
New Width b (in)	0	New Depth d (in)	0		
Section Modulus (in^3)			8.19		0.00
Moment of Inertia Strong-Axis (in^4)			22.53		0.00
Moment of Inertia Weak-Axis (in^4)			1.97		0.00
Number of Plies			1		0
Interior Perpemdicular Bearing Width (in)			1.625		
End Perpemdicular Bearing Width (in)			1.625		
Demand Bending Stress (psi)					
fb = M/S			**820**		OK
Demand Shear Stress (psi)					
fv=1.5 x (V/bd)			**44**		OK
Demand Interior Perpendicular Bearing Stress (psi)					
fPerp-c= (R/bd_b)			**200**		OK
Demand End Perpendicular Bearing Stress (psi)					
fPerp-c= (R/bd_b)			**100**		OK

Project Name:	Glynn Archer School	Project Code	
Member Information:		Date:	

First floor joist double span over the officer area 11'-10" Max.

Members Bending stress F_b (psi)		1500
Members Shear stress F_v (psi)		175
Members Perpendicular Bearing Stress		825
Load duration Factor C_D		1
Wet Service Factor C_M		1
temperature Factor C_t		1
Beam Stability Factor CL		1
Size Factor C_F		1
Flat Use Factor C_{fu}		1
Incising Factor Ci		0.8
Repetitive Member Factor C_r		1.15
Interior Bearing Arear Factor C_b		1.23
End Bearing Arear Factor C_b		1.19
Adjusted Allowable Bending Stress (psi)		
$F'_b=F_b \times C_D \times C_M \times C_t \times C_L \times C_F \times C_{fu} \times C_i \times C_r$		**1380**
Adjusted Allowable Shear Stress (psi)		
$F'_v=F_v \times C_D \times C_M \times C_t \times C_F \times C_{fu} \times C_i$		**140**
Adjusted Allowable perpendicular Int. bearing Stress (psi)		
$F'_{perp\text{-}c}=F_{perp\text{-}c} \times C_M \times C_t \times C_i \times C_b$		**812**
Adjusted Allowable End perpendicular bearing Stress (psi)		
$F'_{perp\text{-}c}=F_{perp\text{-}c} \times C_M \times C_t \times C_i \times C_b$		**784**

Demand Moment (lbs-ft)			854.44		
Demand Shear (lbs)			325.50		
Interior Demand Reaction R (lbs)					
End Demand Reaction R (lbs)			325.50		
Member Properties:					
Exist Width b (in)	1.63	Exist Depth d (in)	5.50		
New Width b (in)	0	New Depth d (in)	0		
Section Modulus (in^3)			8.19		0.00
Moment of Inertia Strong-Axis (in^4)			22.53		0.00
Moment of Inertia Weak-Axis (in^4)			1.97		0.00
Number of Plies			1		0
Interior Perpemdicular Bearing Width (in)			1.625		
End Perpemdicular Bearing Width (in)			2		
Demand Bending Stress (psi)					
fb = M/S			**1252**		OK
Demand Shear Stress (psi)					
fv=1.5 x (V/bd)			**55**		OK
Demand Interior Perpendicular Bearing Stress (psi)					
fPerp-c= (R/bd_b)			**0**		OK
Demand End Perpendicular Bearing Stress (psi)					
fPerp-c= (R/bd_b)			**100**		OK

Building A - First Floor Framing Plan

Beam #	Span (ft)	Beam Length		Width	Depth	O.C.	Live Load (psf)		Adjusted Live Load (plf)	Dead Load (psf)		Adjusted Dead Load (plf)	Total Load (plf)	Max Shear (lb)	Max Moment (lbs-ft)
		Feet	Inches				Partition Wall								
1A1	11.83	11.00	10.00	1.63	7.50	1.33		100.00	133.33		8.50	11.33	144.67	855.94	2532.17
1A2	12.25	12.00	3.00	1.63	7.50	1.33		100.00	133.33		8.50	11.33	144.67	1107.60	2713.63
1A3	10.42	10.00	5.00	1.63	7.50	1.33		100.00	133.33		8.50	11.33	144.67	941.84	1962.17
1A4	10.42	10.00	5.00	1.63	7.50	1.33		100.00	133.33		8.50	11.33	144.67	753.47	1962.17
1A5	7.00	7.00	0.00	1.63	7.50	1.33		100.00	133.33		8.50	11.33	144.67	632.92	829.37
	0.00								0.00			0.00	0.00	0.00	0.00
1A-1X6	2.00	2.00	0.00	5.50	0.75	0.50		100.00	50.00		8.50	4.25	54.25	67.81	25.39
1ARf-1X6	2.00	2.00	0.00	5.50	0.75	0.50		-254.38	-127.19		8.50	4.25	-122.94	-153.68	-57.54
	0.00								0.00			0.00	0.00	0.00	0.00
	0.00								0.00			0.00	0.00	0.00	0.00

Building B - First Floor Framing Plan

Beam #	Span (ft)	Beam Length		Width	Depth	O.C.	Live Load (psf)		Adjusted Live Load (plf)	Dead Load (psf)		Adjusted Dead Load (plf)	Total Load (p1f)	Max Shear (lb)	Max Moment (lbs-ft)
		Feet	Inches				Partition Wall								
1B1	11.83	11.00	10.00	1.63	7.50	1.33		100.00	133.33		8.50	11.33	144.67	855.94	2532.17
1B2	12.25	12.00	3.00	1.63	7.50	1.33		100.00	133.33		8.50	11.33	144.67	886.08	2713.63
1B3	10.42	10.00	5.00	1.63	7.50	1.33		100.00	133.33		8.50	11.33	144.67	753.47	1962.17
1B4	11.38	11.00	4.50	1.63	7.50	1.33		100.00	133.33		8.50	11.33	144.67	1028.49	2339.81
1B5	11.50	11.00	6.00	1.63	7.50	1.33		100.00	133.33		8.50	11.33	144.67	1039.79	2391.52
1B6	10.50	10.00	6.00	1.63	7.50	1.33		100.00	133.33		8.50	11.33	144.67	949.38	1993.69
1B7	10.42	10.00	5.00	1.63	7.50	1.33		100.00	133.33		8.50	11.33	144.67	941.84	1962.17
1B-1X6	2.00	2.00	0.00	5.50	0.75	0.50		100.00	50.00		8.50	4.25	54.25	67.81	25.39

Auditorium - First Floor Framing Plan

Beam #	Span (ft)	Beam Length		Width	Depth	O.C.	Live Load (psf)		Adjusted Live Load (plf)	Dead Load (psf)		Adjusted Dead Load (plf)	Total Load (plf)	Max Shear (lb)	Max Moment (lbs-ft)
		Feet	Inches				Partition Wall								
1C1	12.42	12.00	5.00	1.63	7.50	1.33		100.00	133.33		8.50	11.33	144.67	898.14	2787.97
1C2	12.42	12.00	5.00	1.63	7.50	1.33		100.00	133.33		8.50	11.33	144.67	1122.67	2787.97
1C3	9.33	9.00	4.00	1.63	7.50	1.33		100.00	133.33		8.50	11.33	144.67	675.11	1575.26
1C4	9.08	9.00	1.00	1.63	7.50	1.33		100.00	133.33		8.50	11.33	144.67	657.03	1492.00

Project Name:	Glynn Archer School	Project Code	
Member Information:	Building B - First Floor 1B1 (SINGLE SPAN)	Date:	

Members Bending stress F_b (psi)		1500	Demand Moment (lbs-ft)		2532.17		
Members Shear stress F_v (psi)		175	Demand Shear (lbs)		855.94		
Members Perpendicular Bearing Stress		825	Interior Demand Reaction R (lbs)		855.94		
			End Demand Reaction R (lbs)		855.94		
Load duration Factor C_D		1	Member Properties:				
Wet Service Factor C_M		1	Exist Width b (in)	1.625	Exist Depth d (in)	7.5	
temperature Factor C_t		1	New Width b (in)	1.5	New Depth d (in)	7.25	
Beam Stability Factor CL		1	Section Modulus (in^3)			15.23	13.14
Size Factor C_F		1	Moment of Inertia Strong-Axis (in^4)			57.13	47.63
Flat Use Factor C_{fu}		1	Moment of Inertia Weak-Axis (in^4)			2.68	2.04
Incising Factor Ci		0.8	Number of Plies			1	1
Repetitive Member Factor C_r		1.15	Interior Perpemdicular Bearing Width (in)			3.25	
Interior Bearing Arear Factor C_b		1.12	End Perpemdicular Bearing Width (in)			2	
End Bearing Arear Factor C_b		1.19					
Adjusted Allowable Bending Stress (psi)			Demand Bending Stress (psi)				
$F'_b=F_b \times C_D \times C_M \times C_t \times C_L \times C_F \times C_{fu} \times C_i \times C_r$		**1380**	fb = M/S			**1071**	OK
Adjusted Allowable Shear Stress (psi)			Demand Shear Stress (psi)				
$F'_v=F_v \times C_D \times C_M \times C_t \times C_F \times C_{fu} \times C_i$		**140**	fv=1.5 x (V/bd)			**56**	OK
Adjusted Allowable perpendicular Int. bearing Stress (psi)			Demand Interior Perpendicular Bearing Stress (psi)				
$F'_{perp\text{-}c}=F_{perp\text{-}c} \times C_M \times C_t \times C_i \times C_b$		**736**	fPerp-c= (R/bd_b)			**162**	OK
Adjusted Allowable End perpendicular bearing Stress (psi)			Demand End Perpendicular Bearing Stress (psi)				
$F'_{perp\text{-}c}=F_{perp\text{-}c} \times C_M \times C_t \times C_i \times C_b$		**784**	fPerp-c= (R/bd_b)			**263**	OK

Project Name:	Glynn Archer School	Project Code	
Member Information:	Building B - First Floor 1B2 (SINGLE SPAN)	Date:	

Members Bending stress F_b (psi)		1500	Demand Moment (lbs-ft)		2713.63		
Members Shear stress F_v (psi)		175	Demand Shear (lbs)		886.08		
Members Perpendicular Bearing Stress		825	Interior Demand Reaction R (lbs)		886.08		
			End Demand Reaction R (lbs)		886.08		
Load duration Factor C_D		1	Member Properties:				
Wet Service Factor C_M		1	Exist Width b (in)	1.625	Exist Depth d (in)	7.5	
temperature Factor C_t		1	New Width b (in)	1.5	New Depth d (in)	7.25	
Beam Stability Factor CL		1	Section Modulus (in^3)			15.23	13.14
Size Factor C_F		1	Moment of Inertia Strong-Axis (in^4)			57.13	47.63
Flat Use Factor C_{fu}		1	Moment of Inertia Weak-Axis (in^4)			2.68	2.04
Incising Factor Ci		0.8	Number of Plies			1	1
Repetitive Member Factor C_r		1.15	Interior Perpemdicular Bearing Width (in)			3.25	
Interior Bearing Arear Factor C_b		1.12	End Perpemdicular Bearing Width (in)			2	
End Bearing Arear Factor C_b		1.19					
Adjusted Allowable Bending Stress (psi)			Demand Bending Stress (psi)				
$F'_b=F_b \times C_D \times C_M \times C_t \times C_L \times C_F \times C_{fu} \times C_i \times C_r$		**1380**	fb = M/S			**1148**	OK
Adjusted Allowable Shear Stress (psi)			Demand Shear Stress (psi)				
$F'_v=F_v \times C_D \times C_M \times C_t \times C_F \times C_{fu} \times C_i$		**140**	fv=1.5 x (V/bd)			**58**	OK
Adjusted Allowable perpendicular Int. bearing Stress (psi)			Demand Interior Perpendicular Bearing Stress (psi)				
$F'_{perp\text{-}c}=F_{perp\text{-}c} \times C_M \times C_t \times C_i \times C_b$		**736**	fPerp-c= (R/bd_b)			**168**	OK
Adjusted Allowable End perpendicular bearing Stress (psi)			Demand End Perpendicular Bearing Stress (psi)				
$F'_{perp\text{-}c}=F_{perp\text{-}c} \times C_M \times C_t \times C_i \times C_b$		**784**	fPerp-c= (R/bd_b)			**273**	OK

Project Name:	Glynn Archer School	Project Code	
Member Information:	Building B - First Floor 1B3 (SINGLE SPAN)	Date:	

Members Bending stress F_b (psi)		1500
Members Shear stress F_v (psi)		175
Members Perpendicular Bearing Stress		825
Load duration Factor C_D		1
Wet Service Factor C_M		1
temperature Factor C_t		1
Beam Stability Factor CL		1
Size Factor C_F		1
Flat Use Factor C_{fu}		1
Incising Factor Ci		0.8
Repetitive Member Factor C_r		1.15
Interior Bearing Arear Factor C_b		1.12
End Bearing Arear Factor C_b		1.19
Adjusted Allowable Bending Stress (psi)		
$F'_b=F_b \times C_D \times C_M \times C_t \times C_L \times C_F \times C_{fu} \times C_i \times C_r$		**1380**
Adjusted Allowable Shear Stress (psi)		
$F'_v=F_v \times C_D \times C_M \times C_t \times C_F \times C_{fu} \times C_i$		**140**
Adjusted Allowable perpendicular Int. bearing Stress (psi)		
$F'_{perp\text{-}c}=F_{perp\text{-}c} \times C_M \times C_t \times C_i \times C_b$		**736**
Adjusted Allowable End perpendicular bearing Stress (psi)		
$F'_{perp\text{-}c}=F_{perp\text{-}c} \times C_M \times C_t \times C_i \times C_b$		**784**

Demand Moment (lbs-ft)			1962.17		
Demand Shear (lbs)			753.47		
Interior Demand Reaction R (lbs)			753.47		
End Demand Reaction R (lbs)			753.47		
Member Properties:					
Exist Width b (in)	1.625	Exist Depth d (in)	7.5		
New Width b (in)	1.5	New Depth d (in)	7.25		
Section Modulus (in^3)			15.23		13.14
Moment of Inertia Strong-Axis (in^4)			57.13		47.63
Moment of Inertia Weak-Axis (in^4)			2.68		2.04
Number of Plies			1		1
Interior Perpemdicular Bearing Width (in)			3.25		
End Perpemdicular Bearing Width (in)			2		
Demand Bending Stress (psi)					
fb = M/S			**830**		OK
Demand Shear Stress (psi)					
fv=1.5 x (V/bd)			**49**		OK
Demand Interior Perpendicular Bearing Stress (psi)					
fPerp-c= (R/bd_b)			**143**		OK
Demand End Perpendicular Bearing Stress (psi)					
fPerp-c= (R/bd_b)			**232**		OK

Project Name:	Glynn Archer School	Project Code	
Member Information:	Building B - First Floor 1B4 (2 SPANS)	Date:	

Members Bending stress F_b (psi)		1500
Members Shear stress F_v (psi)		175
Members Perpendicular Bearing Stress		825
Load duration Factor C_D		1
Wet Service Factor C_M		1
temperature Factor C_t		1
Beam Stability Factor CL		1
Size Factor C_F		1
Flat Use Factor C_{fu}		1
Incising Factor Ci		0.8
Repetitive Member Factor C_r		1.15
Interior Bearing Arear Factor C_b		1.12
End Bearing Arear Factor C_b		1.19
Adjusted Allowable Bending Stress (psi)		
$F'_b=F_b \times C_D \times C_M \times C_t \times C_L \times C_F \times C_{fu} \times C_i \times C_r$		**1380**
Adjusted Allowable Shear Stress (psi)		
$F'_v=F_v \times C_D \times C_M \times C_t \times C_F \times C_{fu} \times C_i$		**140**
Adjusted Allowable perpendicular Int. bearing Stress (psi)		
$F'_{perp\text{-}c}=F_{perp\text{-}c} \times C_M \times C_t \times C_i \times C_b$		**736**
Adjusted Allowable End perpendicular bearing Stress (psi)		
$F'_{perp\text{-}c}=F_{perp\text{-}c} \times C_M \times C_t \times C_i \times C_b$		**784**

Demand Moment (lbs-ft)			2339.81		
Demand Shear (lbs)			1028.49		
Interior Demand Reaction R (lbs)			2056.98		
End Demand Reaction R (lbs)			617.09		
Member Properties:					
Exist Width b (in)	1.625	Exist Depth d (in)	7.5		
New Width b (in)	1.5	New Depth d (in)	7.25		
Section Modulus (in^3)			15.23		13.14
Moment of Inertia Strong-Axis (in^4)			57.13		47.63
Moment of Inertia Weak-Axis (in^4)			2.68		2.04
Number of Plies			1		1
Interior Perpemdicular Bearing Width (in)			3.25		
End Perpemdicular Bearing Width (in)			2		
Demand Bending Stress (psi)					
fb = M/S			**990**		OK
Demand Shear Stress (psi)					
fv=1.5 x (V/bd)			**67**		OK
Demand Interior Perpendicular Bearing Stress (psi)					
fPerp-c= (R/bd_b)			**389**		OK
Demand End Perpendicular Bearing Stress (psi)					
fPerp-c= (R/bd_b)			**190**		OK

Project Name:	Glynn Archer School	Project Code	
Member Information:	Building B - First Floor 1B5 (2 SPANS)	Date:	

Members Bending stress F_b (psi)		1500
Members Shear stress F_v (psi)		175
Members Perpendicular Bearing Stress		825
Load duration Factor C_D		1
Wet Service Factor C_M		1
temperature Factor C_t		1
Beam Stability Factor CL		1
Size Factor C_F		1
Flat Use Factor C_{fu}		1
Incising Factor Ci		0.8
Repetitive Member Factor C_r		1.15
Interior Bearing Arear Factor C_b		1.12
End Bearing Arear Factor C_b		1.19
Adjusted Allowable Bending Stress (psi)		
$F'_b=F_b \times C_D \times C_M \times C_t \times C_L \times C_F \times C_{fu} \times C_i \times C_r$		**1380**
Adjusted Allowable Shear Stress (psi)		
$F'_v=F_v \times C_D \times C_M \times C_t \times C_F \times C_{fu} \times C_i$		**140**
Adjusted Allowable perpendicular Int. bearing Stress (psi)		
$F'_{perp\text{-}c}=F_{perp\text{-}c} \times C_M \times C_t \times C_i \times C_b$		**736**
Adjusted Allowable End perpendicular bearing Stress (psi)		
$F'_{perp\text{-}c}=F_{perp\text{-}c} \times C_M \times C_t \times C_i \times C_b$		**784**

Demand Moment (lbs-ft)			2391.52		
Demand Shear (lbs)			1039.79		
Interior Demand Reaction R (lbs)			2079.58		
End Demand Reaction R (lbs)			623.88		
Member Properties:					
Exist Width b (in)	1.625	Exist Depth d (in)	7.5		
New Width b (in)	1.5	New Depth d (in)	7.25		
Section Modulus (in^3)			15.23		13.14
Moment of Inertia Strong-Axis (in^4)			57.13		47.63
Moment of Inertia Weak-Axis (in^4)			2.68		2.04
Number of Plies			1		1
Interior Perpemdicular Bearing Width (in)			3.25		
End Perpemdicular Bearing Width (in)			2		
Demand Bending Stress (psi)					
fb = M/S			**1011**		OK
Demand Shear Stress (psi)					
fv=1.5 x (V/bd)			**68**		OK
Demand Interior Perpendicular Bearing Stress (psi)					
fPerp-c= (R/bd_b)			**394**		OK
Demand End Perpendicular Bearing Stress (psi)					
fPerp-c= (R/bd_b)			**192**		OK

Project Name:	Glynn Archer School	Project Code	
Member Information:	Building B - First Floor 1B6 (2 SPANS)	Date:	

Members Bending stress F_b (psi)		1500
Members Shear stress F_v (psi)		175
Members Perpendicular Bearing Stress		825
Load duration Factor C_D		1
Wet Service Factor C_M		1
temperature Factor C_t		1
Beam Stability Factor CL		1
Size Factor C_F		1
Flat Use Factor C_{fu}		1
Incising Factor Ci		0.8
Repetitive Member Factor C_r		1.15
Interior Bearing Arear Factor C_b		1.12
End Bearing Arear Factor C_b		1.19
Adjusted Allowable Bending Stress (psi)		
$F'_b=F_b \times C_D \times C_M \times C_t \times C_L \times C_F \times C_{fu} \times C_i \times C_r$		**1380**
Adjusted Allowable Shear Stress (psi)		
$F'_v=F_v \times C_D \times C_M \times C_t \times C_F \times C_{fu} \times C_i$		**140**
Adjusted Allowable perpendicular Int. bearing Stress (psi)		
$F'_{perp\text{-}c}=F_{perp\text{-}c} \times C_M \times C_t \times C_i \times C_b$		**736**
Adjusted Allowable End perpendicular bearing Stress (psi)		
$F'_{perp\text{-}c}=F_{perp\text{-}c} \times C_M \times C_t \times C_i \times C_b$		**784**

Demand Moment (lbs-ft)			1993.69		
Demand Shear (lbs)			949.38		
Interior Demand Reaction R (lbs)			1898.75		
End Demand Reaction R (lbs)			569.63		
Member Properties:					
Exist Width b (in)	1.625	Exist Depth d (in)	7.5		
New Width b (in)	1.5	New Depth d (in)	7.25		
Section Modulus (in^3)			15.23		13.14
Moment of Inertia Strong-Axis (in^4)			57.13		47.63
Moment of Inertia Weak-Axis (in^4)			2.68		2.04
Number of Plies			1		1
Interior Perpemdicular Bearing Width (in)			3.25		
End Perpemdicular Bearing Width (in)			2		
Demand Bending Stress (psi)					
fb = M/S			**843**		OK
Demand Shear Stress (psi)					
fv=1.5 x (V/bd)			**62**		OK
Demand Interior Perpendicular Bearing Stress (psi)					
fPerp-c= (R/bd_b)			**360**		OK
Demand End Perpendicular Bearing Stress (psi)					
fPerp-c= (R/bd_b)			**175**		OK

Project Name:	Glynn Archer School	Project Code	
Member Information:	Building B - First Floor 1B7 (2 SPANS)	Date:	

Members Bending stress F_b (psi)		1500
Members Shear stress F_v (psi)		175
Members Perpendicular Bearing Stress		825
Load duration Factor C_D		1
Wet Service Factor C_M		1
temperature Factor C_t		1
Beam Stability Factor CL		1
Size Factor C_F		1
Flat Use Factor C_{fu}		1
Incising Factor Ci		0.8
Repetitive Member Factor C_r		1.15
Interior Bearing Arear Factor C_b		1.12
End Bearing Arear Factor C_b		1.19
Adjusted Allowable Bending Stress (psi)		
$F'_b=F_b \times C_D \times C_M \times C_t \times C_L \times C_F \times C_{fu} \times C_i \times C_r$		**1380**
Adjusted Allowable Shear Stress (psi)		
$F'_v=F_v \times C_D \times C_M \times C_t \times C_F \times C_{fu} \times C_i$		**140**
Adjusted Allowable perpendicular Int. bearing Stress (psi)		
$F'_{perp\text{-}c}=F_{perp\text{-}c} \times C_M \times C_t \times C_i \times C_b$		**736**
Adjusted Allowable End perpendicular bearing Stress (psi)		
$F'_{perp\text{-}c}=F_{perp\text{-}c} \times C_M \times C_t \times C_i \times C_b$		**784**

Demand Moment (lbs-ft)			1962.167		
Demand Shear (lbs)			941.8403		
Interior Demand Reaction R (lbs)			1883.681		
End Demand Reaction R (lbs)			565.1042		
Member Properties:					
Exist Width b (in)	1.625	Exist Depth d (in)	7.5		
New Width b (in)	1.5	New Depth d (in)	7.25		
Section Modulus (in^3)			15.23		13.14
Moment of Inertia Strong-Axis (in^4)			57.13		47.63
Moment of Inertia Weak-Axis (in^4)			2.68		2.04
Number of Plies			1		1
Interior Perpemdicular Bearing Width (in)			3.25		
End Perpemdicular Bearing Width (in)			2		
Demand Bending Stress (psi)					
fb = M/S			**830**		OK
Demand Shear Stress (psi)					
fv=1.5 x (V/bd)			**61**		OK
Demand Interior Perpendicular Bearing Stress (psi)					
fPerp-c= (R/bd_b)			**357**		OK
Demand End Perpendicular Bearing Stress (psi)					
fPerp-c= (R/bd_b)			**174**		OK

Project Name:	Glynn Archer School	Project Code	
Member Information:	Building B - First floor Wood 1x6 Nominal Wood Sheathing	Date:	

Members Bending stress F_b (psi)		1500
Members Shear stress F_v (psi)		175
Members Perpendicular Bearing Stress		825
Load duration Factor C_D		1
Wet Service Factor C_M		1
temperature Factor C_t		1
Beam Stability Factor CL		1
Size Factor C_F		1
Flat Use Factor C_{fu}		1
Incising Factor Ci		0.8
Repetitive Member Factor C_r		1.15
Interior Bearing Arear Factor C_b		1.23
End Bearing Arear Factor C_b		1.23
Adjusted Allowable Bending Stress (psi)		
$F'_b=F_b \times C_D \times C_M \times C_t \times C_L \times C_F \times C_{fu} \times C_i \times C_r$		**1380**
Adjusted Allowable Shear Stress (psi)		
$F'_v=F_v \times C_D \times C_M \times C_t \times C_F \times C_{fu} \times C_i$		**140**
Adjusted Allowable perpendicular Int. bearing Stress (psi)		
$F'_{perp\text{-}c}=F_{perp\text{-}c} \times C_M \times C_t \times C_i \times C_b$		**812**
Adjusted Allowable End perpendicular bearing Stress (psi)		
$F'_{perp\text{-}c}=F_{perp\text{-}c} \times C_M \times C_t \times C_i \times C_b$		**812**

Demand Moment (lbs-ft)			25.39		
Demand Shear (lbs)			67.81		
Interior Demand Reaction R (lbs)			135.63		
End Demand Reaction R (lbs)			40.69		
Member Properties:					
Exist Width b (in)	5.5	Exist Depth d (in)	0.75		
New Width b (in)	0	New Depth d (in)	0		
Section Modulus (in^3)			0.52		0.00
Moment of Inertia Strong-Axis (in^4)			0.19		0.00
Moment of Inertia Weak-Axis (in^4)			10.40		0.00
Number of Plies			1		0
Interior Perpemdicular Bearing Width (in)			1.625		
End Perpemdicular Bearing Width (in)			1.625		
Demand Bending Stress (psi)					
fb = M/S			**591**		OK
Demand Shear Stress (psi)					
fv=1.5 x (V/bd)			**25**		OK
Demand Interior Perpendicular Bearing Stress (psi)					
fPerp-c= (R/bd_b)			**15**		OK
Demand End Perpendicular Bearing Stress (psi)					
fPerp-c= (R/bd_b)			**5**		OK

Project Name:	Glynn Archer School	Project Code	
Member Information:	Building A - First Floor 1A1 (SINGLE SPAN)	Date:	

Members Bending stress F_b (psi)		1500	Demand Moment (lbs-ft)		2532.17		
Members Shear stress F_v (psi)		175	Demand Shear (lbs)		855.94		
Members Perpendicular Bearing Stress		825	Interior Demand Reaction R (lbs)		855.94		
			End Demand Reaction R (lbs)		855.94		
Load duration Factor C_D		1	Member Properties:				
Wet Service Factor C_M		1	Exist Width b (in)	1.625	Exist Depth d (in)	7.5	
temperature Factor C_t		1	New Width b (in)	0	New Depth d (in)	0	
Beam Stability Factor CL		1	Section Modulus (in^3)			15.23	0.00
Size Factor C_F		1	Moment of Inertia Strong-Axis (in^4)			57.13	0.00
Flat Use Factor C_{fu}		1	Moment of Inertia Weak-Axis (in^4)			2.68	0.00
Incising Factor Ci		0.8	Number of Plies			1	0
Repetitive Member Factor C_r		1.15	Interior Perpemdicular Bearing Width (in)			3.25	
Interior Bearing Arear Factor C_b		1.12	End Perpemdicular Bearing Width (in)			2	
End Bearing Arear Factor C_b		1.19					
Adjusted Allowable Bending Stress (psi)			Demand Bending Stress (psi)				
$F'_b=F_b \times C_D \times C_M \times C_t \times C_L \times C_F \times C_{fu} \times C_i \times C_r$		**1380**	fb = M/S			**1995**	NO GOOD
Adjusted Allowable Shear Stress (psi)			Demand Shear Stress (psi)				
$F'_v=F_v \times C_D \times C_M \times C_t \times C_F \times C_{fu} \times C_i$		**140**	fv=1.5 x (V/bd)			**105**	OK
Adjusted Allowable perpendicular Int. bearing Stress (psi)			Demand Interior Perpendicular Bearing Stress (psi)				
$F'_{perp\text{-}c}=F_{perp\text{-}c} \times C_M \times C_t \times C_i \times C_b$		**736**	fPerp-c= (R/bd_b)			**162**	OK
Adjusted Allowable End perpendicular bearing Stress (psi)			Demand End Perpendicular Bearing Stress (psi)				
$F'_{perp\text{-}c}=F_{perp\text{-}c} \times C_M \times C_t \times C_i \times C_b$		**784**	fPerp-c= (R/bd_b)			**263**	OK

Project Name:	Glynn Archer School	Project Code	
Member Information:	Building A - First Floor 1A2 (SINGLE SPAN)	Date:	

Members Bending stress F_b (psi)		1500	Demand Moment (lbs-ft)		2713.63		
Members Shear stress F_v (psi)		175	Demand Shear (lbs)		1107.60		
Members Perpendicular Bearing Stress		825	Interior Demand Reaction R (lbs)		1107.60		
			End Demand Reaction R (lbs)		1107.60		
Load duration Factor C_D		1	Member Properties:				
Wet Service Factor C_M		1	Exist Width b (in)	1.625	Exist Depth d (in)	7.5	
temperature Factor C_t		1	New Width b (in)	0	New Depth d (in)	0	
Beam Stability Factor CL		1	Section Modulus (in^3)			15.23	0.00
Size Factor C_F		1	Moment of Inertia Strong-Axis (in^4)			57.13	0.00
Flat Use Factor C_{fu}		1	Moment of Inertia Weak-Axis (in^4)			2.68	0.00
Incising Factor Ci		0.8	Number of Plies			1	0
Repetitive Member Factor C_r		1.15	Interior Perpemdicular Bearing Width (in)			3.25	
Interior Bearing Arear Factor C_b		1.12	End Perpemdicular Bearing Width (in)			2	
End Bearing Arear Factor C_b		1.19					
Adjusted Allowable Bending Stress (psi)			Demand Bending Stress (psi)				
$F'_b=F_b \times C_D \times C_M \times C_t \times C_L \times C_F \times C_{fu} \times C_i \times C_r$		**1380**	fb = M/S			**2138**	NO GOOD
Adjusted Allowable Shear Stress (psi)			Demand Shear Stress (psi)				
$F'_v=F_v \times C_D \times C_M \times C_t \times C_F \times C_{fu} \times C_i$		**140**	fv=1.5 x (V/bd)			**136**	OK
Adjusted Allowable perpendicular Int. bearing Stress (psi)			Demand Interior Perpendicular Bearing Stress (psi)				
$F'_{perp\text{-}c}=F_{perp\text{-}c} \times C_M \times C_t \times C_i \times C_b$		**736**	fPerp-c= (R/bd_b)			**210**	OK
Adjusted Allowable End perpendicular bearing Stress (psi)			Demand End Perpendicular Bearing Stress (psi)				
$F'_{perp\text{-}c}=F_{perp\text{-}c} \times C_M \times C_t \times C_i \times C_b$		**784**	fPerp-c= (R/bd_b)			**341**	OK

Project Name:	Glynn Archer School	Project Code	
Member Information:	Building A - First Floor 1A3 (2 SPANS)	Date:	

Members Bending stress F_b (psi)		1500	Demand Moment (lbs-ft)		1962.17		
Members Shear stress F_v (psi)		175	Demand Shear (lbs)		941.84		
Members Perpendicular Bearing Stress		825	Interior Demand Reaction R (lbs)		1883.68		
			End Demand Reaction R (lbs)		565.10		
Load duration Factor C_D		1	Member Properties:				
Wet Service Factor C_M		1	Exist Width b (in)	1.625	Exist Depth d (in)	7.5	
temperature Factor C_t		1	New Width b (in)	0	New Depth d (in)	0	
Beam Stability Factor CL		1	Section Modulus (in^3)			15.23	0.00
Size Factor C_F		1	Moment of Inertia Strong-Axis (in^4)			57.13	0.00
Flat Use Factor C_{fu}		1	Moment of Inertia Weak-Axis (in^4)			2.68	0.00
Incising Factor Ci		0.8	Number of Plies			1	0
Repetitive Member Factor C_r		1.15	Interior Perpemdicular Bearing Width (in)			3.25	
Interior Bearing Arear Factor C_b		1.12	End Perpemdicular Bearing Width (in)			2	
End Bearing Arear Factor C_b		1.19					
Adjusted Allowable Bending Stress (psi)			Demand Bending Stress (psi)				
$F'_b=F_b \times C_D \times C_M \times C_t \times C_L \times C_F \times C_{fu} \times C_i \times C_r$		**1380**	fb = M/S			**1546**	NO GOOD
Adjusted Allowable Shear Stress (psi)			Demand Shear Stress (psi)				
$F'_v=F_v \times C_D \times C_M \times C_t \times C_F \times C_{fu} \times C_i$		**140**	fv=1.5 x (V/bd)			**116**	OK
Adjusted Allowable perpendicular Int. bearing Stress (psi)			Demand Interior Perpendicular Bearing Stress (psi)				
$F'_{perp\text{-}c}=F_{perp\text{-}c} \times C_M \times C_t \times C_i \times C_b$		**736**	fPerp-c= (R/bd_b)			**357**	OK
Adjusted Allowable End perpendicular bearing Stress (psi)			Demand End Perpendicular Bearing Stress (psi)				
$F'_{perp\text{-}c}=F_{perp\text{-}c} \times C_M \times C_t \times C_i \times C_b$		**784**	fPerp-c= (R/bd_b)			**174**	OK

Project Name:	Glynn Archer School	Project Code	
Member Information:	Building A - First Floor 1A4 (2 SPANS)	Date:	

Members Bending stress F_b (psi)		1500	Demand Moment (lbs-ft)		1962.17		
Members Shear stress F_v (psi)		175	Demand Shear (lbs)		753.47		
Members Perpendicular Bearing Stress		825	Interior Demand Reaction R (lbs)		1506.94		
			End Demand Reaction R (lbs)		452.08		
Load duration Factor C_D		1	Member Properties:				
Wet Service Factor C_M		1	Exist Width b (in)	1.625	Exist Depth d (in)	7.5	
temperature Factor C_t		1	New Width b (in)	0	New Depth d (in)	0	
Beam Stability Factor CL		1	Section Modulus (in^3)			15.23	0.00
Size Factor C_F		1	Moment of Inertia Strong-Axis (in^4)			57.13	0.00
Flat Use Factor C_{fu}		1	Moment of Inertia Weak-Axis (in^4)			2.68	0.00
Incising Factor Ci		0.8	Number of Plies			1	0
Repetitive Member Factor C_r		1.15	Interior Perpemdicular Bearing Width (in)			3.25	
Interior Bearing Arear Factor C_b		1.12	End Perpemdicular Bearing Width (in)			2	
End Bearing Arear Factor C_b		1.19					
Adjusted Allowable Bending Stress (psi)			Demand Bending Stress (psi)				
$F'_b=F_b \times C_D \times C_M \times C_t \times C_L \times C_F \times C_{fu} \times C_i \times C_r$		**1380**	fb = M/S			**1546**	NO GOOD
Adjusted Allowable Shear Stress (psi)			Demand Shear Stress (psi)				
$F'_v=F_v \times C_D \times C_M \times C_t \times C_F \times C_{fu} \times C_i$		**140**	fv=1.5 x (V/bd)			**93**	OK
Adjusted Allowable perpendicular Int. bearing Stress (psi)			Demand Interior Perpendicular Bearing Stress (psi)				
$F'_{perp\text{-}c}=F_{perp\text{-}c} \times C_M \times C_t \times C_i \times C_b$		**736**	fPerp-c= (R/bd_b)			**285**	OK
Adjusted Allowable End perpendicular bearing Stress (psi)			Demand End Perpendicular Bearing Stress (psi)				
$F'_{perp\text{-}c}=F_{perp\text{-}c} \times C_M \times C_t \times C_i \times C_b$		**784**	fPerp-c= (R/bd_b)			**139**	OK

Project Name:	Glynn Archer School	Project Code	
Member Information:	Building A - First Floor 1A5 (3 SPANS)	Date:	

Members Bending stress F_b (psi)		1500	Demand Moment (lbs-ft)		829.37		
Members Shear stress F_v (psi)		175	Demand Shear (lbs)		632.92		
Members Perpendicular Bearing Stress		825	Interior Demand Reaction R (lbs)		1265.83		
			End Demand Reaction R (lbs)		455.70		
Load duration Factor C_D		1	Member Properties:				
Wet Service Factor C_M		1	Exist Width b (in)	1.625	Exist Depth d (in)	7.5	
temperature Factor C_t		1	New Width b (in)	0	New Depth d (in)	0	
Beam Stability Factor CL		1	Section Modulus (in^3)			15.23	0.00
Size Factor C_F		1	Moment of Inertia Strong-Axis (in^4)			57.13	0.00
Flat Use Factor C_{fu}		1	Moment of Inertia Weak-Axis (in^4)			2.68	0.00
Incising Factor Ci		0.8	Number of Plies			1	0
Repetitive Member Factor C_r		1.15	Interior Perpemdicular Bearing Width (in)			3.25	
Interior Bearing Arear Factor C_b		1.12	End Perpemdicular Bearing Width (in)			2	
End Bearing Arear Factor C_b		1.19					
Adjusted Allowable Bending Stress (psi)			Demand Bending Stress (psi)				
$F'_b=F_b \times C_D \times C_M \times C_t \times C_L \times C_F \times C_{fu} \times C_i \times C_r$		**1380**	fb = M/S			**653**	OK
Adjusted Allowable Shear Stress (psi)			Demand Shear Stress (psi)				
$F'_v=F_v \times C_D \times C_M \times C_t \times C_F \times C_{fu} \times C_i$		**140**	fv=1.5 x (V/bd)			**78**	OK
Adjusted Allowable perpendicular Int. bearing Stress (psi)			Demand Interior Perpendicular Bearing Stress (psi)				
$F'_{perp\text{-}c}=F_{perp\text{-}c} \times C_M \times C_t \times C_i \times C_b$		**736**	fPerp-c= (R/bd_b)			**240**	OK
Adjusted Allowable End perpendicular bearing Stress (psi)			Demand End Perpendicular Bearing Stress (psi)				
$F'_{perp\text{-}c}=F_{perp\text{-}c} \times C_M \times C_t \times C_i \times C_b$		**784**	fPerp-c= (R/bd_b)			**140**	OK

Project Name:	Glynn Archer School	Project Code	
Member Information:		Date:	

Members Bending stress F_b (psi)		1500
Members Shear stress F_v (psi)		175
Members Perpendicular Bearing Stress		825
Load duration Factor C_D		1
Wet Service Factor C_M		1
temperature Factor C_t		1
Beam Stability Factor CL		1
Size Factor C_F		1
Flat Use Factor C_{fu}		1
Incising Factor Ci		0.8
Repetitive Member Factor C_r		1.15
Interior Bearing Arear Factor C_b		1.12
End Bearing Arear Factor C_b		1.23
Adjusted Allowable Bending Stress (psi)		
$F'_b=F_b \times C_D \times C_M \times C_t \times C_L \times C_F \times C_{fu} \times C_i \times C_r$		**1380**
Adjusted Allowable Shear Stress (psi)		
$F'_v=F_v \times C_D \times C_M \times C_t \times C_F \times C_{fu} \times C_i$		**140**
Adjusted Allowable perpendicular Int. bearing Stress (psi)		
$F'_{perp\text{-}c}=F_{perp\text{-}c} \times C_M \times C_t \times C_i \times C_b$		**736**
Adjusted Allowable End perpendicular bearing Stress (psi)		
$F'_{perp\text{-}c}=F_{perp\text{-}c} \times C_M \times C_t \times C_i \times C_b$		**812**

Demand Moment (lbs-ft)			0		
Demand Shear (lbs)			0		
Interior Demand Reaction R (lbs)					
End Demand Reaction R (lbs)					
Member Properties:					
Exist Width b (in)	0	Exist Depth d (in)	0		
New Width b (in)	0	New Depth d (in)	0		
Section Modulus (in^3)			0.00		0.00
Moment of Inertia Strong-Axis (in^4)			0.00		0.00
Moment of Inertia Weak-Axis (in^4)			0.00		0.00
Number of Plies			1		0
Interior Perpemdicular Bearing Width (in)			3.25		
End Perpemdicular Bearing Width (in)			1.625		
Demand Bending Stress (psi)					
fb = M/S			**#DIV/0!**		#DIV/0!
Demand Shear Stress (psi)					
fv=1.5 x (V/bd)			**#DIV/0!**		#DIV/0!
Demand Interior Perpendicular Bearing Stress (psi)					
fPerp-c= (R/bd_b)			**#DIV/0!**		#DIV/0!
Demand End Perpendicular Bearing Stress (psi)					
fPerp-c= (R/bd_b)			**#DIV/0!**		#DIV/0!

Project Name:	Glynn Archer School	Project Code	
Member Information:	Building A - First floor Wood 1x6 Nominal Wood Sheathing	Date:	

Members Bending stress F_b (psi)		1500	Demand Moment (lbs-ft)			25.389		
Members Shear stress F_v (psi)		175	Demand Shear (lbs)			67.8125		
Members Perpendicular Bearing Stress		825	Interior Demand Reaction R (lbs)			135.63		
			End Demand Reaction R (lbs)			48.83		
Load duration Factor C_D		1	Member Properties:					
Wet Service Factor C_M		1	Exist Width b (in)	5.5	Exist Depth d (in)	0.75		
temperature Factor C_t		1	New Width b (in)	0	New Depth d (in)	0		
Beam Stability Factor CL		1	Section Modulus (in^3)			0.52		0.00
Size Factor C_F		1	Moment of Inertia Strong-Axis (in^4)			0.19		0.00
Flat Use Factor C_{fu}		1	Moment of Inertia Weak-Axis (in^4)			10.40		0.00
Incising Factor Ci		0.8	Number of Plies			1		0
Repetitive Member Factor C_r		1.15	Interior Perpemdicular Bearing Width (in)			1.625		
Interior Bearing Arear Factor C_b		1.23	End Perpemdicular Bearing Width (in)			1.625		
End Bearing Arear Factor C_b		1.23						
Adjusted Allowable Bending Stress (psi)			Demand Bending Stress (psi)					
$F'_b=F_b \times C_D \times C_M \times C_t \times C_L \times C_F \times C_{fu} \times C_i \times C_r$		**1380**	fb = M/S			**591**		OK
Adjusted Allowable Shear Stress (psi)			Demand Shear Stress (psi)					
$F'_v=F_v \times C_D \times C_M \times C_t \times C_F \times C_{fu} \times C_i$		**140**	fv=1.5 x (V/bd)			**25**		OK
Adjusted Allowable perpendicular Int. bearing Stress (psi)			Demand Interior Perpendicular Bearing Stress (psi)					
$F'_{perp\text{-}c}=F_{perp\text{-}c} \times C_M \times C_t \times C_i \times C_b$		**812**	fPerp-c= (R/bd_b)			**15**		OK
Adjusted Allowable End perpendicular bearing Stress (psi)			Demand End Perpendicular Bearing Stress (psi)					
$F'_{perp\text{-}c}=F_{perp\text{-}c} \times C_M \times C_t \times C_i \times C_b$		**812**	fPerp-c= (R/bd_b)			**5**		OK

Project Name:	Glynn Archer School	Project Code	
Member Information:		Date:	

Members Bending stress F_b (psi)		1500
Members Shear stress F_v (psi)		175
Members Perpendicular Bearing Stress		825
Load duration Factor C_D		1
Wet Service Factor C_M		1
temperature Factor C_t		1
Beam Stability Factor CL		1
Size Factor C_F		1
Flat Use Factor C_{fu}		1
Incising Factor Ci		0.8
Repetitive Member Factor C_r		1.15
Interior Bearing Arear Factor C_b		1.12
End Bearing Arear Factor C_b		1.23
Adjusted Allowable Bending Stress (psi)		
$F'_b=F_b \times C_D \times C_M \times C_t \times C_L \times C_F \times C_{fu} \times C_i \times C_r$		**1380**
Adjusted Allowable Shear Stress (psi)		
$F'_v=F_v \times C_D \times C_M \times C_t \times C_F \times C_{fu} \times C_i$		**140**
Adjusted Allowable perpendicular Int. bearing Stress (psi)		
$F'_{perp\text{-}c}=F_{perp\text{-}c} \times C_M \times C_t \times C_i \times C_b$		**736**
Adjusted Allowable End perpendicular bearing Stress (psi)		
$F'_{perp\text{-}c}=F_{perp\text{-}c} \times C_M \times C_t \times C_i \times C_b$		**812**

Demand Moment (lbs-ft)			-57.5359		
Demand Shear (lbs)			-153.675		
Interior Demand Reaction R (lbs)			-307.35		
End Demand Reaction R (lbs)			-110.65		
Member Properties:					
Exist Width b (in)	5.5	Exist Depth d (in)	0.75		
New Width b (in)	0	New Depth d (in)	0		
Section Modulus (in^3)			0.52		0.00
Moment of Inertia Strong-Axis (in^4)			0.19		0.00
Moment of Inertia Weak-Axis (in^4)			10.40		0.00
Number of Plies			1		0
Interior Perpemdicular Bearing Width (in)			3.25		
End Perpemdicular Bearing Width (in)			1.625		
Demand Bending Stress (psi)					
fb = M/S			**-1339**		OK
Demand Shear Stress (psi)					
fv=1.5 x (V/bd)			**-56**		OK
Demand Interior Perpendicular Bearing Stress (psi)					
fPerp-c= (R/bd_b)			**-17**		OK
Demand End Perpendicular Bearing Stress (psi)					
fPerp-c= (R/bd_b)			**-12**		OK

Project Name:	Glynn Archer School	Project Code	
Member Information:		Date:	

Members Bending stress F_b (psi)		1500
Members Shear stress F_v (psi)		175
Members Perpendicular Bearing Stress		825
Load duration Factor C_D		1
Wet Service Factor C_M		1
temperature Factor C_t		1
Beam Stability Factor CL		1
Size Factor C_F		1
Flat Use Factor C_{fu}		1
Incising Factor Ci		0.8
Repetitive Member Factor C_r		1.15
Interior Bearing Arear Factor C_b		1.12
End Bearing Arear Factor C_b		1.23
Adjusted Allowable Bending Stress (psi)		
$F'_b=F_b \times C_D \times C_M \times C_t \times C_L \times C_F \times C_{fu} \times C_i \times C_r$		**1380**
Adjusted Allowable Shear Stress (psi)		
$F'_v=F_v \times C_D \times C_M \times C_t \times C_F \times C_{fu} \times C_i$		**140**
Adjusted Allowable perpendicular Int. bearing Stress (psi)		
$F'_{perp\text{-}c}=F_{perp\text{-}c} \times C_M \times C_t \times C_i \times C_b$		**736**
Adjusted Allowable End perpendicular bearing Stress (psi)		
$F'_{perp\text{-}c}=F_{perp\text{-}c} \times C_M \times C_t \times C_i \times C_b$		**812**

Demand Moment (lbs-ft)			0		
Demand Shear (lbs)			0		
Interior Demand Reaction R (lbs)					
End Demand Reaction R (lbs)					
Member Properties:					
Exist Width b (in)	0	Exist Depth d (in)	0		
New Width b (in)	0	New Depth d (in)	0		
Section Modulus (in^3)			0.00		0.00
Moment of Inertia Strong-Axis (in^4)			0.00		0.00
Moment of Inertia Weak-Axis (in^4)			0.00		0.00
Number of Plies			1		0
Interior Perpemdicular Bearing Width (in)			3.25		
End Perpemdicular Bearing Width (in)			1.625		
Demand Bending Stress (psi)					
fb = M/S			**#DIV/0!**		#DIV/0!
Demand Shear Stress (psi)					
fv=1.5 x (V/bd)			**#DIV/0!**		#DIV/0!
Demand Interior Perpendicular Bearing Stress (psi)					
fPerp-c= (R/bd_b)			**#DIV/0!**		#DIV/0!
Demand End Perpendicular Bearing Stress (psi)					
fPerp-c= (R/bd_b)			**#DIV/0!**		#DIV/0!

Project Name:	Glynn Archer School	Project Code	
Member Information:		Date:	

Members Bending stress F_b (psi)		1500
Members Shear stress F_v (psi)		175
Members Perpendicular Bearing Stress		825
Load duration Factor C_D		1
Wet Service Factor C_M		1
temperature Factor C_t		1
Beam Stability Factor CL		1
Size Factor C_F		1
Flat Use Factor C_{fu}		1
Incising Factor Ci		0.8
Repetitive Member Factor C_r		1.15
Interior Bearing Arear Factor C_b		1.12
End Bearing Arear Factor C_b		1.23
Adjusted Allowable Bending Stress (psi)		
$F'_b=F_b \times C_D \times C_M \times C_t \times C_L \times C_F \times C_{fu} \times C_i \times C_r$		**1380**
Adjusted Allowable Shear Stress (psi)		
$F'_v=F_v \times C_D \times C_M \times C_t \times C_F \times C_{fu} \times C_i$		**140**
Adjusted Allowable perpendicular Int. bearing Stress (psi)		
$F'_{perp\text{-}c}=F_{perp\text{-}c} \times C_M \times C_t \times C_i \times C_b$		**736**
Adjusted Allowable End perpendicular bearing Stress (psi)		
$F'_{perp\text{-}c}=F_{perp\text{-}c} \times C_M \times C_t \times C_i \times C_b$		**812**

Demand Moment (lbs-ft)			0		
Demand Shear (lbs)			0		
Interior Demand Reaction R (lbs)					
End Demand Reaction R (lbs)					
Member Properties:					
Exist Width b (in)	0	Exist Depth d (in)	0		
New Width b (in)	0	New Depth d (in)	0		
Section Modulus (in^3)			0.00		0.00
Moment of Inertia Strong-Axis (in^4)			0.00		0.00
Moment of Inertia Weak-Axis (in^4)			0.00		0.00
Number of Plies			1		0
Interior Perpemdicular Bearing Width (in)			3.25		
End Perpemdicular Bearing Width (in)			1.625		
Demand Bending Stress (psi)					
fb = M/S			**#DIV/0!**		#DIV/0!
Demand Shear Stress (psi)					
fv=1.5 x (V/bd)			**#DIV/0!**		#DIV/0!
Demand Interior Perpendicular Bearing Stress (psi)					
fPerp-c= (R/bd_b)			**#DIV/0!**		#DIV/0!
Demand End Perpendicular Bearing Stress (psi)					
fPerp-c= (R/bd_b)			**#DIV/0!**		#DIV/0!

Project Name:	Glynn Archer School	Project Code	
Member Information:	Auditorium First Floor - 1C1 (SINGLE SPAN)	Date:	

Members Bending stress F_b (psi)		1500
Members Shear stress F_v (psi)		175
Members Perpendicular Bearing Stress		825
Load duration Factor C_D		1
Wet Service Factor C_M		1
temperature Factor C_t		1
Beam Stability Factor CL		1
Size Factor C_F		1
Flat Use Factor C_{fu}		1
Incising Factor Ci		0.8
Repetitive Member Factor C_r		1.15
Interior Bearing Arear Factor C_b		1.07
End Bearing Arear Factor C_b		1.19
Adjusted Allowable Bending Stress (psi)		
$F'_b=F_b \times C_D \times C_M \times C_t \times C_L \times C_F \times C_{fu} \times C_i \times C_r$		**1380**
Adjusted Allowable Shear Stress (psi)		
$F'_v=F_v \times C_D \times C_M \times C_t \times C_F \times C_{fu} \times C_i$		**140**
Adjusted Allowable perpendicular Int. bearing Stress (psi)		
$F'_{perp\text{-}c}=F_{perp\text{-}c} \times C_M \times C_t \times C_i \times C_b$		**703**
Adjusted Allowable End perpendicular bearing Stress (psi)		
$F'_{perp\text{-}c}=F_{perp\text{-}c} \times C_M \times C_t \times C_i \times C_b$		**784**

Demand Moment (lbs-ft)			2787.97		
Demand Shear (lbs)			898.14		
Interior Demand Reaction R (lbs)			898.14		
End Demand Reaction R (lbs)			898.14		
Member Properties:					
Exist Width b (in)	1.63	Exist Depth d (in)	7.50		
New Width b (in)	1.5	New Depth d (in)	7.25		
Section Modulus (in^3)			15.23		13.14
Moment of Inertia Strong-Axis (in^4)			57.13		47.63
Moment of Inertia Weak-Axis (in^4)			2.68		2.04
Number of Plies			1		1
Interior Perpemdicular Bearing Width (in)			5.75		
End Perpemdicular Bearing Width (in)			2		
Demand Bending Stress (psi)					
fb = M/S			**1179**		OK
Demand Shear Stress (psi)					
fv=1.5 x (V/bd)			**58**		OK
Demand Interior Perpendicular Bearing Stress (psi)					
fPerp-c= (R/bd_b)			**96**		OK
Demand End Perpendicular Bearing Stress (psi)					
fPerp-c= (R/bd_b)			**276**		OK

Project Name:	Glynn Archer School	Project Code	
Member Information:	Auditorium First Floor - 1C2 (2 SPANS)	Date:	

Members Bending stress F_b (psi)		1500
Members Shear stress F_v (psi)		175
Members Perpendicular Bearing Stress		825
Load duration Factor C_D		1
Wet Service Factor C_M		1
temperature Factor C_t		1
Beam Stability Factor CL		1
Size Factor C_F		1
Flat Use Factor C_{fu}		1
Incising Factor Ci		0.8
Repetitive Member Factor C_r		1.15
Interior Bearing Arear Factor C_b		1.07
End Bearing Arear Factor C_b		1.19
Adjusted Allowable Bending Stress (psi)		
$F'_b=F_b \times C_D \times C_M \times C_t \times C_L \times C_F \times C_{fu} \times C_i \times C_r$		**1380**
Adjusted Allowable Shear Stress (psi)		
$F'_v=F_v \times C_D \times C_M \times C_t \times C_F \times C_{fu} \times C_i$		**140**
Adjusted Allowable perpendicular Int. bearing Stress (psi)		
$F'_{perp\text{-}c}=F_{perp\text{-}c} \times C_M \times C_t \times C_i \times C_b$		**703**
Adjusted Allowable End perpendicular bearing Stress (psi)		
$F'_{perp\text{-}c}=F_{perp\text{-}c} \times C_M \times C_t \times C_i \times C_b$		**784**

Demand Moment (lbs-ft)			2787.97		
Demand Shear (lbs)			1122.67		
Interior Demand Reaction R (lbs)			2245.35		
End Demand Reaction R (lbs)			673.60		
Member Properties:					
Exist Width b (in)	1.63	Exist Depth d (in)	7.50		
New Width b (in)	1.5	New Depth d (in)	7.25		
Section Modulus (in^3)			15.23		13.14
Moment of Inertia Strong-Axis (in^4)			57.13		47.63
Moment of Inertia Weak-Axis (in^4)			2.68		2.04
Number of Plies			1		1
Interior Perpemdicular Bearing Width (in)			5.75		
End Perpemdicular Bearing Width (in)			2		
Demand Bending Stress (psi)					
fb = M/S			**1179**		OK
Demand Shear Stress (psi)					
fv=1.5 x (V/bd)			**73**		OK
Demand Interior Perpendicular Bearing Stress (psi)					
fPerp-c= (R/bd_b)			**240**		OK
Demand End Perpendicular Bearing Stress (psi)					
fPerp-c= (R/bd_b)			**207**		OK

Project Name:	Glynn Archer School	Project Code	
Member Information:	Auditorium First Floor - 1C3 (SINGLE SPAN)	Date:	

Members Bending stress F_b (psi)		1500
Members Shear stress F_v (psi)		175
Members Perpendicular Bearing Stress		825
Load duration Factor C_D		1
Wet Service Factor C_M		1
temperature Factor C_t		1
Beam Stability Factor CL		1
Size Factor C_F		1
Flat Use Factor C_{fu}		1
Incising Factor Ci		0.8
Repetitive Member Factor C_r		1.15
Interior Bearing Arear Factor C_b		1.07
End Bearing Arear Factor C_b		1.19
Adjusted Allowable Bending Stress (psi)		
$F'_b=F_b \times C_D \times C_M \times C_t \times C_L \times C_F \times C_{fu} \times C_i \times C_r$		**1380**
Adjusted Allowable Shear Stress (psi)		
$F'_v=F_v \times C_D \times C_M \times C_t \times C_F \times C_{fu} \times C_i$		**140**
Adjusted Allowable perpendicular Int. bearing Stress (psi)		
$F'_{perp\text{-}c}=F_{perp\text{-}c} \times C_M \times C_t \times C_i \times C_b$		**705**
Adjusted Allowable End perpendicular bearing Stress (psi)		
$F'_{perp\text{-}c}=F_{perp\text{-}c} \times C_M \times C_t \times C_i \times C_b$		**784**

Demand Moment (lbs-ft)			1575.26		
Demand Shear (lbs)			675.11		
Interior Demand Reaction R (lbs)			675.11		
End Demand Reaction R (lbs)			675.11		
Member Properties:					
Exist Width b (in)	1.63	Exist Depth d (in)	7.50		
New Width b (in)	0	New Depth d (in)	0		
Section Modulus (in^3)			15.23		0.00
Moment of Inertia Strong-Axis (in^4)			57.13		0.00
Moment of Inertia Weak-Axis (in^4)			2.68		0.00
Number of Plies			1		0
Interior Perpemdicular Bearing Width (in)			5.5		
End Perpemdicular Bearing Width (in)			2		
Demand Bending Stress (psi)					
fb = M/S			**1241**		OK
Demand Shear Stress (psi)					
fv=1.5 x (V/bd)			**83**		OK
Demand Interior Perpendicular Bearing Stress (psi)					
fPerp-c= (R/bd_b)			**76**		OK
Demand End Perpendicular Bearing Stress (psi)					
fPerp-c= (R/bd_b)			**208**		OK

Project Name:	Glynn Archer School	Project Code	
Member Information:	Auditorium First Floor - 1C4 (SINGLE SPAN)	Date:	

Members Bending stress F_b (psi)		1500
Members Shear stress F_v (psi)		175
Members Perpendicular Bearing Stress		825
Load duration Factor C_D		1
Wet Service Factor C_M		1
temperature Factor C_t		1
Beam Stability Factor CL		1
Size Factor C_F		1
Flat Use Factor C_{fu}		1
Incising Factor Ci		0.8
Repetitive Member Factor C_r		1.15
Interior Bearing Arear Factor C_b		1.07
End Bearing Arear Factor C_b		1.07
Adjusted Allowable Bending Stress (psi)		
$F'_b=F_b \times C_D \times C_M \times C_t \times C_L \times C_F \times C_{fu} \times C_i \times C_r$		**1380**
Adjusted Allowable Shear Stress (psi)		
$F'_v=F_v \times C_D \times C_M \times C_t \times C_F \times C_{fu} \times C_i$		**140**
Adjusted Allowable perpendicular Int. bearing Stress (psi)		
$F'_{perp\text{-}c}=F_{perp\text{-}c} \times C_M \times C_t \times C_i \times C_b$		**705**
Adjusted Allowable End perpendicular bearing Stress (psi)		
$F'_{perp\text{-}c}=F_{perp\text{-}c} \times C_M \times C_t \times C_i \times C_b$		**705**

Demand Moment (lbs-ft)			1492.00		
Demand Shear (lbs)			657.03		
Interior Demand Reaction R (lbs)			657.03		
End Demand Reaction R (lbs)			657.03		
Member Properties:					
Exist Width b (in)	1.63	Exist Depth d (in)	7.50		
New Width b (in)	0	New Depth d (in)	0		
Section Modulus (in^3)			15.23		0.00
Moment of Inertia Strong-Axis (in^4)			57.13		0.00
Moment of Inertia Weak-Axis (in^4)			2.68		0.00
Number of Plies			1		0
Interior Perpemdicular Bearing Width (in)			5.5		
End Perpemdicular Bearing Width (in)			5.5		
Demand Bending Stress (psi)					
fb = M/S			**1175**		OK
Demand Shear Stress (psi)					
fv=1.5 x (V/bd)			**81**		OK
Demand Interior Perpendicular Bearing Stress (psi)					
fPerp-c= (R/bd_b)			**74**		OK
Demand End Perpendicular Bearing Stress (psi)					
fPerp-c= (R/bd_b)			**74**		OK

Building A - First Floor Framing Plan

Beam #	Span (ft)	Beam Length		Width	Depth	O.C.	Live Load (psf)		Adjusted Live Load (plf)	Dead Load (psf)		Adjusted Dead Load (plf)	Total Load (plf)	Max Shear (lb)	Max Moment (lbs-ft)
		Feet	Inches				Partition Wall								
1A1	11.83	11.00	10.00	1.63	7.50	1.33		100.00	133.33		8.50	11.33	144.67	855.94	2532.17
1A2	12.25	12.00	3.00	1.63	7.50	1.33		100.00	133.33		8.50	11.33	144.67	1107.60	2713.63
1A3	10.42	10.00	5.00	1.63	7.50	1.33	15.00	50.00	86.67		8.50	11.33	98.00	638.02	1329.21
1A4	10.42	10.00	5.00	1.63	7.50	1.33	15.00	50.00	86.67		8.50	11.33	98.00	510.42	1329.21
1A5	7.00	7.00	0.00	1.63	7.50	1.33	15.00	50.00	86.67		8.50	11.33	98.00	428.75	561.83
	0.00								0.00			0.00	0.00	0.00	0.00
1A-1X6	2.00	2.00	0.00	5.50	0.75	0.50	15.00	50.00	32.50		8.50	4.25	36.75	45.94	17.20
1ARf-1X6	2.00	2.00	0.00	5.50	0.75	0.50		-254.38	-127.19		8.50	4.25	-122.94	-153.68	-57.54
	0.00								0.00			0.00	0.00	0.00	0.00
	0.00								0.00			0.00	0.00	0.00	0.00

Building B - First Floor Framing Plan

Beam #	Span (ft)	Beam Length		Width	Depth	O.C.	Live Load (psf)		Adjusted Live Load (plf)	Dead Load (psf)		Adjusted Dead Load (plf)	Total Load (p1f)	Max Shear (lb)	Max Moment (lbs-ft)
		Feet	Inches				Partition Wall								
1B1	11.83	11.00	10.00	1.63	7.50	1.33		100.00	133.33		8.50	11.33	144.67	855.94	2532.17
1B2	12.25	12.00	3.00	1.63	7.50	1.33		100.00	133.33		8.50	11.33	144.67	886.08	2713.63
1B3	10.42	10.00	5.00	1.63	7.50	1.33		100.00	133.33		8.50	11.33	144.67	753.47	1962.17
1B4	11.38	11.00	4.50	1.63	7.50	1.33		100.00	133.33		8.50	11.33	144.67	1028.49	2339.81
1B5	11.50	11.00	6.00	1.63	7.50	1.33	15.00	50.00	86.67		8.50	11.33	98.00	704.38	1620.06
1B6	10.50	10.00	6.00	1.63	7.50	1.33	15.00	50.00	86.67		8.50	11.33	98.00	643.13	1350.56
1B7	10.42	10.00	5.00	1.63	7.50	1.33	15.00	50.00	86.67		8.50	11.33	98.00	638.02	1329.21
1B-1X6	2.00	2.00	0.00	5.50	0.75	0.50		100.00	50.00		8.50	4.25	54.25	67.81	25.39

Auditorium - First Floor Framing Plan

Beam #	Span (ft)	Beam Length		Width	Depth	O.C.	Live Load (psf)		Adjusted Live Load (plf)	Dead Load (psf)		Adjusted Dead Load (plf)	Total Load (plf)	Max Shear (lb)	Max Moment (lbs-ft)
		Feet	Inches				Partition Wall								
1C1	11.42	11.00	5.00	1.63	7.50	1.33		60.00	80.00		8.50	11.33	91.33	521.36	1488.05
1C2	13.50	13.00	6.00	1.63	7.50	1.33		60.00	80.00		8.50	11.33	91.33	770.63	2080.69
1C3	9.33	9.00	4.00	1.63	7.50	1.33		60.00	80.00		8.50	11.33	91.33	426.22	994.52
1C4	9.08	9.00	1.00	1.63	7.50	1.33		60.00	80.00		8.50	11.33	91.33	414.81	941.95

Project Name:	Glynn Archer School	Project Code	
Member Information:	Building B - First Floor 1B1 (SINGLE SPAN)	Date:	

Members Bending stress F_b (psi)		1500	Demand Moment (lbs-ft)		2532.17		
Members Shear stress F_v (psi)		175	Demand Shear (lbs)		855.94		
Members Perpendicular Bearing Stress		825	Interior Demand Reaction R (lbs)		855.94		
			End Demand Reaction R (lbs)		855.94		
Load duration Factor C_D		1	Member Properties:				
Wet Service Factor C_M		1	Exist Width b (in)	1.625	Exist Depth d (in)	7.5	
temperature Factor C_t		1	New Width b (in)	1.5	New Depth d (in)	7.25	
Beam Stability Factor CL		1	Section Modulus (in^3)			15.23	13.14
Size Factor C_F		1	Moment of Inertia Strong-Axis (in^4)			57.13	47.63
Flat Use Factor C_{fu}		1	Moment of Inertia Weak-Axis (in^4)			2.68	2.04
Incising Factor Ci		0.8	Number of Plies			1	1
Repetitive Member Factor C_r		1.15	Interior Perpemdicular Bearing Width (in)			3.25	
Interior Bearing Arear Factor C_b		1.12	End Perpemdicular Bearing Width (in)			2	
End Bearing Arear Factor C_b		1.19					
Adjusted Allowable Bending Stress (psi)			Demand Bending Stress (psi)				
$F'_b=F_b \times C_D \times C_M \times C_t \times C_L \times C_F \times C_{fu} \times C_i \times C_r$		**1380**	fb = M/S			**1071**	OK
Adjusted Allowable Shear Stress (psi)			Demand Shear Stress (psi)				
$F'_v=F_v \times C_D \times C_M \times C_t \times C_F \times C_{fu} \times C_i$		**140**	fv=1.5 x (V/bd)			**56**	OK
Adjusted Allowable perpendicular Int. bearing Stress (psi)			Demand Interior Perpendicular Bearing Stress (psi)				
$F'_{perp\text{-}c}=F_{perp\text{-}c} \times C_M \times C_t \times C_i \times C_b$		**736**	fPerp-c= (R/bd_b)			**162**	OK
Adjusted Allowable End perpendicular bearing Stress (psi)			Demand End Perpendicular Bearing Stress (psi)				
$F'_{perp\text{-}c}=F_{perp\text{-}c} \times C_M \times C_t \times C_i \times C_b$		**784**	fPerp-c= (R/bd_b)			**263**	OK

Project Name:	Glynn Archer School	Project Code	
Member Information:	Building B - First Floor 1B2 (SINGLE SPAN)	Date:	

Members Bending stress F_b (psi)		1500	Demand Moment (lbs-ft)		2713.63		
Members Shear stress F_v (psi)		175	Demand Shear (lbs)		886.08		
Members Perpendicular Bearing Stress		825	Interior Demand Reaction R (lbs)		886.08		
			End Demand Reaction R (lbs)		886.08		
Load duration Factor C_D		1	Member Properties:				
Wet Service Factor C_M		1	Exist Width b (in)	1.625	Exist Depth d (in)	7.5	
temperature Factor C_t		1	New Width b (in)	1.5	New Depth d (in)	7.25	
Beam Stability Factor CL		1	Section Modulus (in^3)			15.23	13.14
Size Factor C_F		1	Moment of Inertia Strong-Axis (in^4)			57.13	47.63
Flat Use Factor C_{fu}		1	Moment of Inertia Weak-Axis (in^4)			2.68	2.04
Incising Factor Ci		0.8	Number of Plies			1	1
Repetitive Member Factor C_r		1.15	Interior Perpemdicular Bearing Width (in)			3.25	
Interior Bearing Arear Factor C_b		1.12	End Perpemdicular Bearing Width (in)			2	
End Bearing Arear Factor C_b		1.19					
Adjusted Allowable Bending Stress (psi)			Demand Bending Stress (psi)				
$F'_b=F_b \times C_D \times C_M \times C_t \times C_L \times C_F \times C_{fu} \times C_i \times C_r$		**1380**	fb = M/S			**1148**	OK
Adjusted Allowable Shear Stress (psi)			Demand Shear Stress (psi)				
$F'_v=F_v \times C_D \times C_M \times C_t \times C_F \times C_{fu} \times C_i$		**140**	fv=1.5 x (V/bd)			**58**	OK
Adjusted Allowable perpendicular Int. bearing Stress (psi)			Demand Interior Perpendicular Bearing Stress (psi)				
$F'_{perp\text{-}c}=F_{perp\text{-}c} \times C_M \times C_t \times C_i \times C_b$		**736**	fPerp-c= (R/bd_b)			**168**	OK
Adjusted Allowable End perpendicular bearing Stress (psi)			Demand End Perpendicular Bearing Stress (psi)				
$F'_{perp\text{-}c}=F_{perp\text{-}c} \times C_M \times C_t \times C_i \times C_b$		**784**	fPerp-c= (R/bd_b)			**273**	OK

Project Name:	Glynn Archer School	Project Code	
Member Information:	Building B - First Floor 1B3 (SINGLE SPAN)	Date:	

Members Bending stress F_b (psi)		1500
Members Shear stress F_v (psi)		175
Members Perpendicular Bearing Stress		825
Load duration Factor C_D		1
Wet Service Factor C_M		1
temperature Factor C_t		1
Beam Stability Factor CL		1
Size Factor C_F		1
Flat Use Factor C_{fu}		1
Incising Factor Ci		0.8
Repetitive Member Factor C_r		1.15
Interior Bearing Arear Factor C_b		1.12
End Bearing Arear Factor C_b		1.19
Adjusted Allowable Bending Stress (psi)		
$F'_b=F_b \times C_D \times C_M \times C_t \times C_L \times C_F \times C_{fu} \times C_i \times C_r$		**1380**
Adjusted Allowable Shear Stress (psi)		
$F'_v=F_v \times C_D \times C_M \times C_t \times C_F \times C_{fu} \times C_i$		**140**
Adjusted Allowable perpendicular Int. bearing Stress (psi)		
$F'_{perp\text{-}c}=F_{perp\text{-}c} \times C_M \times C_t \times C_i \times C_b$		**736**
Adjusted Allowable End perpendicular bearing Stress (psi)		
$F'_{perp\text{-}c}=F_{perp\text{-}c} \times C_M \times C_t \times C_i \times C_b$		**784**

Demand Moment (lbs-ft)			1962.17		
Demand Shear (lbs)			753.47		
Interior Demand Reaction R (lbs)			753.47		
End Demand Reaction R (lbs)			753.47		
Member Properties:					
Exist Width b (in)	1.625	Exist Depth d (in)	7.5		
New Width b (in)	1.5	New Depth d (in)	7.25		
Section Modulus (in^3)			15.23		13.14
Moment of Inertia Strong-Axis (in^4)			57.13		47.63
Moment of Inertia Weak-Axis (in^4)			2.68		2.04
Number of Plies			1		1
Interior Perpemdicular Bearing Width (in)			3.25		
End Perpemdicular Bearing Width (in)			2		
Demand Bending Stress (psi)					
fb = M/S			**830**		OK
Demand Shear Stress (psi)					
fv=1.5 x (V/bd)			**49**		OK
Demand Interior Perpendicular Bearing Stress (psi)					
fPerp-c= (R/bd_b)			**143**		OK
Demand End Perpendicular Bearing Stress (psi)					
fPerp-c= (R/bd_b)			**232**		OK

Project Name:	Glynn Archer School	Project Code	
Member Information:	Building B - First Floor 1B4 (2 SPANS)	Date:	

Members Bending stress F_b (psi)		1500
Members Shear stress F_v (psi)		175
Members Perpendicular Bearing Stress		825
Load duration Factor C_D		1
Wet Service Factor C_M		1
temperature Factor C_t		1
Beam Stability Factor CL		1
Size Factor C_F		1
Flat Use Factor C_{fu}		1
Incising Factor Ci		0.8
Repetitive Member Factor C_r		1.15
Interior Bearing Arear Factor C_b		1.12
End Bearing Arear Factor C_b		1.19
Adjusted Allowable Bending Stress (psi)		
$F'_b=F_b \times C_D \times C_M \times C_t \times C_L \times C_F \times C_{fu} \times C_i \times C_r$		**1380**
Adjusted Allowable Shear Stress (psi)		
$F'_v=F_v \times C_D \times C_M \times C_t \times C_F \times C_{fu} \times C_i$		**140**
Adjusted Allowable perpendicular Int. bearing Stress (psi)		
$F'_{perp\text{-}c}=F_{perp\text{-}c} \times C_M \times C_t \times C_i \times C_b$		**736**
Adjusted Allowable End perpendicular bearing Stress (psi)		
$F'_{perp\text{-}c}=F_{perp\text{-}c} \times C_M \times C_t \times C_i \times C_b$		**784**

Demand Moment (lbs-ft)			2339.81		
Demand Shear (lbs)			1028.49		
Interior Demand Reaction R (lbs)			2056.98		
End Demand Reaction R (lbs)			617.09		
Member Properties:					
Exist Width b (in)	1.625	Exist Depth d (in)	7.5		
New Width b (in)	1.5	New Depth d (in)	7.25		
Section Modulus (in^3)			15.23		13.14
Moment of Inertia Strong-Axis (in^4)			57.13		47.63
Moment of Inertia Weak-Axis (in^4)			2.68		2.04
Number of Plies			1		1
Interior Perpemdicular Bearing Width (in)			3.25		
End Perpemdicular Bearing Width (in)			2		
Demand Bending Stress (psi)					
fb = M/S			**990**		OK
Demand Shear Stress (psi)					
fv=1.5 x (V/bd)			**67**		OK
Demand Interior Perpendicular Bearing Stress (psi)					
fPerp-c= (R/bd_b)			**389**		OK
Demand End Perpendicular Bearing Stress (psi)					
fPerp-c= (R/bd_b)			**190**		OK

Project Name:	Glynn Archer School	Project Code	
Member Information:	Building B - First Floor 1B5 (2 SPANS)	Date:	

Members Bending stress F_b (psi)		1500	Demand Moment (lbs-ft)		1620.06		
Members Shear stress F_v (psi)		175	Demand Shear (lbs)		704.38		
Members Perpendicular Bearing Stress		825	Interior Demand Reaction R (lbs)		1408.75		
			End Demand Reaction R (lbs)		422.63		
Load duration Factor C_D		1	Member Properties:				
Wet Service Factor C_M		1	Exist Width b (in)	1.625	Exist Depth d (in)	7.5	
temperature Factor C_t		1	New Width b (in)	1.5	New Depth d (in)	7.25	
Beam Stability Factor CL		1	Section Modulus (in^3)			15.23	13.14
Size Factor C_F		1	Moment of Inertia Strong-Axis (in^4)			57.13	47.63
Flat Use Factor C_{fu}		1	Moment of Inertia Weak-Axis (in^4)			2.68	2.04
Incising Factor Ci		0.8	Number of Plies			1	0
Repetitive Member Factor C_r		1.15	Interior Perpemdicular Bearing Width (in)			3.25	
Interior Bearing Arear Factor C_b		1.12	End Perpemdicular Bearing Width (in)			2	
End Bearing Arear Factor C_b		1.19					
Adjusted Allowable Bending Stress (psi)			Demand Bending Stress (psi)				
$F'_b=F_b \times C_D \times C_M \times C_t \times C_L \times C_F \times C_{fu} \times C_i \times C_r$		**1380**	fb = M/S			**1276**	OK
Adjusted Allowable Shear Stress (psi)			Demand Shear Stress (psi)				
$F'_v=F_v \times C_D \times C_M \times C_t \times C_F \times C_{fu} \times C_i$		**140**	fv=1.5 x (V/bd)			**87**	OK
Adjusted Allowable perpendicular Int. bearing Stress (psi)			Demand Interior Perpendicular Bearing Stress (psi)				
$F'_{perp\text{-}c}=F_{perp\text{-}c} \times C_M \times C_t \times C_i \times C_b$		**736**	fPerp-c= (R/bd_b)			**267**	OK
Adjusted Allowable End perpendicular bearing Stress (psi)			Demand End Perpendicular Bearing Stress (psi)				
$F'_{perp\text{-}c}=F_{perp\text{-}c} \times C_M \times C_t \times C_i \times C_b$		**784**	fPerp-c= (R/bd_b)			**130**	OK

Project Name:	Glynn Archer School	Project Code	
Member Information:	Building B - First Floor 1B6 (2 SPANS)	Date:	

Members Bending stress F_b (psi)		1500
Members Shear stress F_v (psi)		175
Members Perpendicular Bearing Stress		825
Load duration Factor C_D		1
Wet Service Factor C_M		1
temperature Factor C_t		1
Beam Stability Factor CL		1
Size Factor C_F		1
Flat Use Factor C_{fu}		1
Incising Factor Ci		0.8
Repetitive Member Factor C_r		1.15
Interior Bearing Arear Factor C_b		1.12
End Bearing Arear Factor C_b		1.19
Adjusted Allowable Bending Stress (psi)		
$F'_b=F_b \times C_D \times C_M \times C_t \times C_L \times C_F \times C_{fu} \times C_i \times C_r$		**1380**
Adjusted Allowable Shear Stress (psi)		
$F'_v=F_v \times C_D \times C_M \times C_t \times C_F \times C_{fu} \times C_i$		**140**
Adjusted Allowable perpendicular Int. bearing Stress (psi)		
$F'_{perp\text{-}c}=F_{perp\text{-}c} \times C_M \times C_t \times C_i \times C_b$		**736**
Adjusted Allowable End perpendicular bearing Stress (psi)		
$F'_{perp\text{-}c}=F_{perp\text{-}c} \times C_M \times C_t \times C_i \times C_b$		**784**

Demand Moment (lbs-ft)			1350.56		
Demand Shear (lbs)			643.13		
Interior Demand Reaction R (lbs)			1286.25		
End Demand Reaction R (lbs)			385.88		
Member Properties:					
Exist Width b (in)	1.625	Exist Depth d (in)	7.5		
New Width b (in)	1.5	New Depth d (in)	7.25		
Section Modulus (in^3)			15.23		13.14
Moment of Inertia Strong-Axis (in^4)			57.13		47.63
Moment of Inertia Weak-Axis (in^4)			2.68		2.04
Number of Plies			1		0
Interior Perpemdicular Bearing Width (in)			3.25		
End Perpemdicular Bearing Width (in)			2		
Demand Bending Stress (psi)					
fb = M/S			**1064**		OK
Demand Shear Stress (psi)					
fv=1.5 x (V/bd)			**79**		OK
Demand Interior Perpendicular Bearing Stress (psi)					
fPerp-c= (R/bd_b)			**244**		OK
Demand End Perpendicular Bearing Stress (psi)					
fPerp-c= (R/bd_b)			**119**		OK

Project Name:	Glynn Archer School	Project Code	
Member Information:	Building B - First Floor 1B7 (2 SPANS)	Date:	

Members Bending stress F_b (psi)		1500
Members Shear stress F_v (psi)		175
Members Perpendicular Bearing Stress		825
Load duration Factor C_D		1
Wet Service Factor C_M		1
temperature Factor C_t		1
Beam Stability Factor CL		1
Size Factor C_F		1
Flat Use Factor C_{fu}		1
Incising Factor Ci		0.8
Repetitive Member Factor C_r		1.15
Interior Bearing Arear Factor C_b		1.12
End Bearing Arear Factor C_b		1.19
Adjusted Allowable Bending Stress (psi)		
$F'_b=F_b \times C_D \times C_M \times C_t \times C_L \times C_F \times C_{fu} \times C_i \times C_r$		**1380**
Adjusted Allowable Shear Stress (psi)		
$F'_v=F_v \times C_D \times C_M \times C_t \times C_F \times C_{fu} \times C_i$		**140**
Adjusted Allowable perpendicular Int. bearing Stress (psi)		
$F'_{perp\text{-}c}=F_{perp\text{-}c} \times C_M \times C_t \times C_i \times C_b$		**736**
Adjusted Allowable End perpendicular bearing Stress (psi)		
$F'_{perp\text{-}c}=F_{perp\text{-}c} \times C_M \times C_t \times C_i \times C_b$		**784**

Demand Moment (lbs-ft)			1329.21		
Demand Shear (lbs)			638.0208		
Interior Demand Reaction R (lbs)			1276.042		
End Demand Reaction R (lbs)			382.8125		
Member Properties:					
Exist Width b (in)	1.625	Exist Depth d (in)	7.5		
New Width b (in)	1.5	New Depth d (in)	7.25		
Section Modulus (in^3)			15.23		13.14
Moment of Inertia Strong-Axis (in^4)			57.13		47.63
Moment of Inertia Weak-Axis (in^4)			2.68		2.04
Number of Plies			1		0
Interior Perpemdicular Bearing Width (in)			3.25		
End Perpemdicular Bearing Width (in)			2		
Demand Bending Stress (psi)					
fb = M/S			**1047**		OK
Demand Shear Stress (psi)					
fv=1.5 x (V/bd)			**79**		OK
Demand Interior Perpendicular Bearing Stress (psi)					
fPerp-c= (R/bd_b)			**242**		OK
Demand End Perpendicular Bearing Stress (psi)					
fPerp-c= (R/bd_b)			**118**		OK

Project Name:	Glynn Archer School	Project Code	
Member Information:	Building B - First floor Wood 1x6 Nominal Wood Sheathing	Date:	

Members Bending stress F_b (psi)		1500
Members Shear stress F_v (psi)		175
Members Perpendicular Bearing Stress		825
Load duration Factor C_D		1
Wet Service Factor C_M		1
temperature Factor C_t		1
Beam Stability Factor CL		1
Size Factor C_F		1
Flat Use Factor C_{fu}		1
Incising Factor Ci		0.8
Repetitive Member Factor C_r		1.15
Interior Bearing Arear Factor C_b		1.23
End Bearing Arear Factor C_b		1.23
Adjusted Allowable Bending Stress (psi)		
$F'_b=F_b \times C_D \times C_M \times C_t \times C_L \times C_F \times C_{fu} \times C_i \times C_r$		**1380**
Adjusted Allowable Shear Stress (psi)		
$F'_v=F_v \times C_D \times C_M \times C_t \times C_F \times C_{fu} \times C_i$		**140**
Adjusted Allowable perpendicular Int. bearing Stress (psi)		
$F'_{perp\text{-}c}=F_{perp\text{-}c} \times C_M \times C_t \times C_i \times C_b$		**812**
Adjusted Allowable End perpendicular bearing Stress (psi)		
$F'_{perp\text{-}c}=F_{perp\text{-}c} \times C_M \times C_t \times C_i \times C_b$		**812**

Demand Moment (lbs-ft)			25.39		
Demand Shear (lbs)			67.81		
Interior Demand Reaction R (lbs)			135.63		
End Demand Reaction R (lbs)			40.69		
Member Properties:					
Exist Width b (in)	5.5	Exist Depth d (in)	0.75		
New Width b (in)	0	New Depth d (in)	0		
Section Modulus (in^3)			0.52		0.00
Moment of Inertia Strong-Axis (in^4)			0.19		0.00
Moment of Inertia Weak-Axis (in^4)			10.40		0.00
Number of Plies			1		0
Interior Perpemdicular Bearing Width (in)			1.625		
End Perpemdicular Bearing Width (in)			1.625		
Demand Bending Stress (psi)					
fb = M/S			**591**		OK
Demand Shear Stress (psi)					
fv=1.5 x (V/bd)			**25**		OK
Demand Interior Perpendicular Bearing Stress (psi)					
fPerp-c= (R/bd_b)			**15**		OK
Demand End Perpendicular Bearing Stress (psi)					
fPerp-c= (R/bd_b)			**5**		OK

Project Name:	Glynn Archer School	Project Code	
Member Information:	Building A - First Floor 1A1 (SINGLE SPAN)	Date:	

Members Bending stress F_b (psi)		1500	Demand Moment (lbs-ft)		2532.17		
Members Shear stress F_v (psi)		175	Demand Shear (lbs)		855.94		
Members Perpendicular Bearing Stress		825	Interior Demand Reaction R (lbs)		855.94		
			End Demand Reaction R (lbs)		855.94		
Load duration Factor C_D		1	Member Properties:				
Wet Service Factor C_M		1	Exist Width b (in)	1.625	Exist Depth d (in)	7.5	
temperature Factor C_t		1	New Width b (in)	1.5	New Depth d (in)	7.25	
Beam Stability Factor CL		1	Section Modulus (in^3)			15.23	13.14
Size Factor C_F		1	Moment of Inertia Strong-Axis (in^4)			57.13	47.63
Flat Use Factor C_{fu}		1	Moment of Inertia Weak-Axis (in^4)			2.68	2.04
Incising Factor Ci		0.8	Number of Plies			1	1
Repetitive Member Factor C_r		1.15	Interior Perpemdicular Bearing Width (in)			3.25	
Interior Bearing Arear Factor C_b		1.12	End Perpemdicular Bearing Width (in)			2	
End Bearing Arear Factor C_b		1.19					
Adjusted Allowable Bending Stress (psi)			Demand Bending Stress (psi)				
$F'_b=F_b \times C_D \times C_M \times C_t \times C_L \times C_F \times C_{fu} \times C_i \times C_r$		**1380**	fb = M/S			**1071**	OK
Adjusted Allowable Shear Stress (psi)			Demand Shear Stress (psi)				
$F'_v=F_v \times C_D \times C_M \times C_t \times C_F \times C_{fu} \times C_i$		**140**	fv=1.5 x (V/bd)			**56**	OK
Adjusted Allowable perpendicular Int. bearing Stress (psi)			Demand Interior Perpendicular Bearing Stress (psi)				
$F'_{perp\text{-}c}=F_{perp\text{-}c} \times C_M \times C_t \times C_i \times C_b$		**736**	fPerp-c= (R/bd_b)			**162**	OK
Adjusted Allowable End perpendicular bearing Stress (psi)			Demand End Perpendicular Bearing Stress (psi)				
$F'_{perp\text{-}c}=F_{perp\text{-}c} \times C_M \times C_t \times C_i \times C_b$		**784**	fPerp-c= (R/bd_b)			**263**	OK

Project Name:	Glynn Archer School	Project Code	
Member Information:	Building A - First Floor 1A2 (SINGLE SPAN)	Date:	

Members Bending stress F_b (psi)		1500	Demand Moment (lbs-ft)		2713.63		
Members Shear stress F_v (psi)		175	Demand Shear (lbs)		1107.60		
Members Perpendicular Bearing Stress		825	Interior Demand Reaction R (lbs)		1107.60		
			End Demand Reaction R (lbs)		1107.60		
Load duration Factor C_D		1	Member Properties:				
Wet Service Factor C_M		1	Exist Width b (in)	1.625	Exist Depth d (in)	7.5	
temperature Factor C_t		1	New Width b (in)	1.5	New Depth d (in)	7.25	
Beam Stability Factor CL		1	Section Modulus (in^3)			15.23	13.14
Size Factor C_F		1	Moment of Inertia Strong-Axis (in^4)			57.13	47.63
Flat Use Factor C_{fu}		1	Moment of Inertia Weak-Axis (in^4)			2.68	2.04
Incising Factor Ci		0.8	Number of Plies			1	0
Repetitive Member Factor C_r		1.15	Interior Perpemdicular Bearing Width (in)			3.25	
Interior Bearing Arear Factor C_b		1.12	End Perpemdicular Bearing Width (in)			2	
End Bearing Arear Factor C_b		1.19					
Adjusted Allowable Bending Stress (psi)			Demand Bending Stress (psi)				
$F'_b=F_b \times C_D \times C_M \times C_t \times C_L \times C_F \times C_{fu} \times C_i \times C_r$		**1380**	fb = M/S			**2138**	NO GOOD
Adjusted Allowable Shear Stress (psi)			Demand Shear Stress (psi)				
$F'_v=F_v \times C_D \times C_M \times C_t \times C_F \times C_{fu} \times C_i$		**140**	fv=1.5 x (V/bd)			**136**	OK
Adjusted Allowable perpendicular Int. bearing Stress (psi)			Demand Interior Perpendicular Bearing Stress (psi)				
$F'_{perp\text{-}c}=F_{perp\text{-}c} \times C_M \times C_t \times C_i \times C_b$		**736**	fPerp-c= (R/bd_b)			**210**	OK
Adjusted Allowable End perpendicular bearing Stress (psi)			Demand End Perpendicular Bearing Stress (psi)				
$F'_{perp\text{-}c}=F_{perp\text{-}c} \times C_M \times C_t \times C_i \times C_b$		**784**	fPerp-c= (R/bd_b)			**341**	OK

Project Name:	Glynn Archer School	Project Code	
Member Information:	Building A - First Floor 1A3 (2 SPANS)	Date:	

Members Bending stress F_b (psi)		1500	Demand Moment (lbs-ft)		1329.21		
Members Shear stress F_v (psi)		175	Demand Shear (lbs)		638.02		
Members Perpendicular Bearing Stress		825	Interior Demand Reaction R (lbs)		1276.04		
			End Demand Reaction R (lbs)		382.81		
Load duration Factor C_D		1	Member Properties:				
Wet Service Factor C_M		1	Exist Width b (in)	1.625	Exist Depth d (in)	7.5	
temperature Factor C_t		1	New Width b (in)	0	New Depth d (in)	0	
Beam Stability Factor CL		1	Section Modulus (in^3)			15.23	0.00
Size Factor C_F		1	Moment of Inertia Strong-Axis (in^4)			57.13	0.00
Flat Use Factor C_{fu}		1	Moment of Inertia Weak-Axis (in^4)			2.68	0.00
Incising Factor Ci		0.8	Number of Plies			1	0
Repetitive Member Factor C_r		1.15	Interior Perpemdicular Bearing Width (in)			3.25	
Interior Bearing Arear Factor C_b		1.12	End Perpemdicular Bearing Width (in)			2	
End Bearing Arear Factor C_b		1.19					
Adjusted Allowable Bending Stress (psi)			Demand Bending Stress (psi)				
$F'_b=F_b \times C_D \times C_M \times C_t \times C_L \times C_F \times C_{fu} \times C_i \times C_r$		**1380**	fb = M/S			**1047**	OK
Adjusted Allowable Shear Stress (psi)			Demand Shear Stress (psi)				
$F'_v=F_v \times C_D \times C_M \times C_t \times C_F \times C_{fu} \times C_i$		**140**	fv=1.5 x (V/bd)			**79**	OK
Adjusted Allowable perpendicular Int. bearing Stress (psi)			Demand Interior Perpendicular Bearing Stress (psi)				
$F'_{perp\text{-}c}=F_{perp\text{-}c} \times C_M \times C_t \times C_i \times C_b$		**736**	fPerp-c= (R/bd_b)			**242**	OK
Adjusted Allowable End perpendicular bearing Stress (psi)			Demand End Perpendicular Bearing Stress (psi)				
$F'_{perp\text{-}c}=F_{perp\text{-}c} \times C_M \times C_t \times C_i \times C_b$		**784**	fPerp-c= (R/bd_b)			**118**	OK

Project Name:	Glynn Archer School	Project Code	
Member Information:	Building A - First Floor 1A4 (2 SPANS)	Date:	

Members Bending stress F_b (psi)		1500	Demand Moment (lbs-ft)		1329.21		
Members Shear stress F_v (psi)		175	Demand Shear (lbs)		510.42		
Members Perpendicular Bearing Stress		825	Interior Demand Reaction R (lbs)		1020.83		
			End Demand Reaction R (lbs)		306.25		
Load duration Factor C_D		1	Member Properties:				
Wet Service Factor C_M		1	Exist Width b (in)	1.625	Exist Depth d (in)	7.5		
temperature Factor C_t		1	New Width b (in)	0	New Depth d (in)	0		
Beam Stability Factor CL		1	Section Modulus (in^3)			15.23		0.00
Size Factor C_F		1	Moment of Inertia Strong-Axis (in^4)			57.13		0.00
Flat Use Factor C_{fu}		1	Moment of Inertia Weak-Axis (in^4)			2.68		0.00
Incising Factor Ci		0.8	Number of Plies			1		0
Repetitive Member Factor C_r		1.15	Interior Perpemdicular Bearing Width (in)			3.25		
Interior Bearing Arear Factor C_b		1.12	End Perpemdicular Bearing Width (in)			2		
End Bearing Arear Factor C_b		1.19						
Adjusted Allowable Bending Stress (psi)			Demand Bending Stress (psi)					
$F'_b=F_b \times C_D \times C_M \times C_t \times C_L \times C_F \times C_{fu} \times C_i \times C_r$		**1380**	fb = M/S			**1047**		OK
Adjusted Allowable Shear Stress (psi)			Demand Shear Stress (psi)					
$F'_v=F_v \times C_D \times C_M \times C_t \times C_F \times C_{fu} \times C_i$		**140**	fv=1.5 x (V/bd)			**63**		OK
Adjusted Allowable perpendicular Int. bearing Stress (psi)			Demand Interior Perpendicular Bearing Stress (psi)					
$F'_{perp\text{-}c}=F_{perp\text{-}c} \times C_M \times C_t \times C_i \times C_b$		**736**	fPerp-c= (R/bd_b)			**193**		OK
Adjusted Allowable End perpendicular bearing Stress (psi)			Demand End Perpendicular Bearing Stress (psi)					
$F'_{perp\text{-}c}=F_{perp\text{-}c} \times C_M \times C_t \times C_i \times C_b$		**784**	fPerp-c= (R/bd_b)			**94**		OK

Project Name:	Glynn Archer School	Project Code	
Member Information:	Building A - First Floor 1A5 (3 SPANS)	Date:	

Members Bending stress F_b (psi)		1500
Members Shear stress F_v (psi)		175
Members Perpendicular Bearing Stress		825
Load duration Factor C_D		1
Wet Service Factor C_M		1
temperature Factor C_t		1
Beam Stability Factor CL		1
Size Factor C_F		1
Flat Use Factor C_{fu}		1
Incising Factor Ci		0.8
Repetitive Member Factor C_r		1.15
Interior Bearing Arear Factor C_b		1.12
End Bearing Arear Factor C_b		1.19
Adjusted Allowable Bending Stress (psi)		
$F'_b=F_b \times C_D \times C_M \times C_t \times C_L \times C_F \times C_{fu} \times C_i \times C_r$		**1380**
Adjusted Allowable Shear Stress (psi)		
$F'_v=F_v \times C_D \times C_M \times C_t \times C_F \times C_{fu} \times C_i$		**140**
Adjusted Allowable perpendicular Int. bearing Stress (psi)		
$F'_{perp\text{-}c}=F_{perp\text{-}c} \times C_M \times C_t \times C_i \times C_b$		**736**
Adjusted Allowable End perpendicular bearing Stress (psi)		
$F'_{perp\text{-}c}=F_{perp\text{-}c} \times C_M \times C_t \times C_i \times C_b$		**784**

Demand Moment (lbs-ft)			561.83		
Demand Shear (lbs)			428.75		
Interior Demand Reaction R (lbs)			857.50		
End Demand Reaction R (lbs)			308.70		
Member Properties:					
Exist Width b (in)	1.625	Exist Depth d (in)	7.5		
New Width b (in)	0	New Depth d (in)	0		
Section Modulus (in^3)			15.23		0.00
Moment of Inertia Strong-Axis (in^4)			57.13		0.00
Moment of Inertia Weak-Axis (in^4)			2.68		0.00
Number of Plies			1		0
Interior Perpemdicular Bearing Width (in)			3.25		
End Perpemdicular Bearing Width (in)			2		
Demand Bending Stress (psi)					
fb = M/S			**443**		OK
Demand Shear Stress (psi)					
fv=1.5 x (V/bd)			**53**		OK
Demand Interior Perpendicular Bearing Stress (psi)					
fPerp-c= (R/bd_b)			**162**		OK
Demand End Perpendicular Bearing Stress (psi)					
fPerp-c= (R/bd_b)			**95**		OK

Project Name:	Glynn Archer School	Project Code	
Member Information:		Date:	

Members Bending stress F_b (psi)		1500
Members Shear stress F_v (psi)		175
Members Perpendicular Bearing Stress		825
Load duration Factor C_D		1
Wet Service Factor C_M		1
temperature Factor C_t		1
Beam Stability Factor CL		1
Size Factor C_F		1
Flat Use Factor C_{fu}		1
Incising Factor Ci		0.8
Repetitive Member Factor C_r		1.15
Interior Bearing Arear Factor C_b		1.12
End Bearing Arear Factor C_b		1.23
Adjusted Allowable Bending Stress (psi)		
$F'_b=F_b \times C_D \times C_M \times C_t \times C_L \times C_F \times C_{fu} \times C_i \times C_r$		**1380**
Adjusted Allowable Shear Stress (psi)		
$F'_v=F_v \times C_D \times C_M \times C_t \times C_F \times C_{fu} \times C_i$		**140**
Adjusted Allowable perpendicular Int. bearing Stress (psi)		
$F'_{perp\text{-}c}=F_{perp\text{-}c} \times C_M \times C_t \times C_i \times C_b$		**736**
Adjusted Allowable End perpendicular bearing Stress (psi)		
$F'_{perp\text{-}c}=F_{perp\text{-}c} \times C_M \times C_t \times C_i \times C_b$		**812**

Demand Moment (lbs-ft)			0		
Demand Shear (lbs)			0		
Interior Demand Reaction R (lbs)					
End Demand Reaction R (lbs)					
Member Properties:					
Exist Width b (in)	0	Exist Depth d (in)	0		
New Width b (in)	0	New Depth d (in)	0		
Section Modulus (in^3)			0.00		0.00
Moment of Inertia Strong-Axis (in^4)			0.00		0.00
Moment of Inertia Weak-Axis (in^4)			0.00		0.00
Number of Plies			1		0
Interior Perpemdicular Bearing Width (in)			3.25		
End Perpemdicular Bearing Width (in)			1.625		
Demand Bending Stress (psi)					
fb = M/S			**#DIV/0!**		#DIV/0!
Demand Shear Stress (psi)					
fv=1.5 x (V/bd)			**#DIV/0!**		#DIV/0!
Demand Interior Perpendicular Bearing Stress (psi)					
fPerp-c= (R/bd_b)			**#DIV/0!**		#DIV/0!
Demand End Perpendicular Bearing Stress (psi)					
fPerp-c= (R/bd_b)			**#DIV/0!**		#DIV/0!

Project Name:	Glynn Archer School	Project Code	
Member Information:	Building A - First floor Wood 1x6 Nominal Wood Sheathing	Date:	

Members Bending stress F_b (psi)		1500
Members Shear stress F_v (psi)		175
Members Perpendicular Bearing Stress		825
Load duration Factor C_D		1
Wet Service Factor C_M		1
temperature Factor C_t		1
Beam Stability Factor CL		1
Size Factor C_F		1
Flat Use Factor C_{fu}		1
Incising Factor Ci		0.8
Repetitive Member Factor C_r		1.15
Interior Bearing Arear Factor C_b		1.23
End Bearing Arear Factor C_b		1.23
Adjusted Allowable Bending Stress (psi)		
$F'_b=F_b \times C_D \times C_M \times C_t \times C_L \times C_F \times C_{fu} \times C_i \times C_r$		**1380**
Adjusted Allowable Shear Stress (psi)		
$F'_v=F_v \times C_D \times C_M \times C_t \times C_F \times C_{fu} \times C_i$		**140**
Adjusted Allowable perpendicular Int. bearing Stress (psi)		
$F'_{perp\text{-}c}=F_{perp\text{-}c} \times C_M \times C_t \times C_i \times C_b$		**812**
Adjusted Allowable End perpendicular bearing Stress (psi)		
$F'_{perp\text{-}c}=F_{perp\text{-}c} \times C_M \times C_t \times C_i \times C_b$		**812**

Demand Moment (lbs-ft)			17.199		
Demand Shear (lbs)			45.9375		
Interior Demand Reaction R (lbs)			91.88		
End Demand Reaction R (lbs)			33.08		
Member Properties:					
Exist Width b (in)	5.5	Exist Depth d (in)	0.75		
New Width b (in)	0	New Depth d (in)	0		
Section Modulus (in^3)			0.52		0.00
Moment of Inertia Strong-Axis (in^4)			0.19		0.00
Moment of Inertia Weak-Axis (in^4)			10.40		0.00
Number of Plies			1		0
Interior Perpemdicular Bearing Width (in)			1.625		
End Perpemdicular Bearing Width (in)			1.625		
Demand Bending Stress (psi)					
fb = M/S			**400**		OK
Demand Shear Stress (psi)					
fv=1.5 x (V/bd)			**17**		OK
Demand Interior Perpendicular Bearing Stress (psi)					
fPerp-c= (R/bd_b)			**10**		OK
Demand End Perpendicular Bearing Stress (psi)					
fPerp-c= (R/bd_b)			**4**		OK

Project Name:	Glynn Archer School	Project Code	
Member Information:		Date:	

Members Bending stress F_b (psi)		1500
Members Shear stress F_v (psi)		175
Members Perpendicular Bearing Stress		825
Load duration Factor C_D		1
Wet Service Factor C_M		1
temperature Factor C_t		1
Beam Stability Factor CL		1
Size Factor C_F		1
Flat Use Factor C_{fu}		1
Incising Factor Ci		0.8
Repetitive Member Factor C_r		1.15
Interior Bearing Arear Factor C_b		1.12
End Bearing Arear Factor C_b		1.23
Adjusted Allowable Bending Stress (psi)		
$F'_b=F_b \times C_D \times C_M \times C_t \times C_L \times C_F \times C_{fu} \times C_i \times C_r$		**1380**
Adjusted Allowable Shear Stress (psi)		
$F'_v=F_v \times C_D \times C_M \times C_t \times C_F \times C_{fu} \times C_i$		**140**
Adjusted Allowable perpendicular Int. bearing Stress (psi)		
$F'_{perp\text{-}c}=F_{perp\text{-}c} \times C_M \times C_t \times C_i \times C_b$		**736**
Adjusted Allowable End perpendicular bearing Stress (psi)		
$F'_{perp\text{-}c}=F_{perp\text{-}c} \times C_M \times C_t \times C_i \times C_b$		**812**

Demand Moment (lbs-ft)			-57.5359		
Demand Shear (lbs)			-153.675		
Interior Demand Reaction R (lbs)			-307.35		
End Demand Reaction R (lbs)			-110.65		
Member Properties:					
Exist Width b (in)	5.5	Exist Depth d (in)	0.75		
New Width b (in)	0	New Depth d (in)	0		
Section Modulus (in^3)			0.52		0.00
Moment of Inertia Strong-Axis (in^4)			0.19		0.00
Moment of Inertia Weak-Axis (in^4)			10.40		0.00
Number of Plies			1		0
Interior Perpemdicular Bearing Width (in)			3.25		
End Perpemdicular Bearing Width (in)			1.625		
Demand Bending Stress (psi)					
fb = M/S			**-1339**		OK
Demand Shear Stress (psi)					
fv=1.5 x (V/bd)			**-56**		OK
Demand Interior Perpendicular Bearing Stress (psi)					
fPerp-c= (R/bd_b)			**-17**		OK
Demand End Perpendicular Bearing Stress (psi)					
fPerp-c= (R/bd_b)			**-12**		OK

Project Name:	Glynn Archer School	Project Code	
Member Information:		Date:	

Members Bending stress F_b (psi)		1500
Members Shear stress F_v (psi)		175
Members Perpendicular Bearing Stress		825
Load duration Factor C_D		1
Wet Service Factor C_M		1
temperature Factor C_t		1
Beam Stability Factor CL		1
Size Factor C_F		1
Flat Use Factor C_{fu}		1
Incising Factor Ci		0.8
Repetitive Member Factor C_r		1.15
Interior Bearing Arear Factor C_b		1.12
End Bearing Arear Factor C_b		1.23
Adjusted Allowable Bending Stress (psi)		
$F'_b=F_b \times C_D \times C_M \times C_t \times C_L \times C_F \times C_{fu} \times C_i \times C_r$		**1380**
Adjusted Allowable Shear Stress (psi)		
$F'_v=F_v \times C_D \times C_M \times C_t \times C_F \times C_{fu} \times C_i$		**140**
Adjusted Allowable perpendicular Int. bearing Stress (psi)		
$F'_{perp\text{-}c}=F_{perp\text{-}c} \times C_M \times C_t \times C_i \times C_b$		**736**
Adjusted Allowable End perpendicular bearing Stress (psi)		
$F'_{perp\text{-}c}=F_{perp\text{-}c} \times C_M \times C_t \times C_i \times C_b$		**812**

Demand Moment (lbs-ft)			0		
Demand Shear (lbs)			0		
Interior Demand Reaction R (lbs)					
End Demand Reaction R (lbs)					
Member Properties:					
Exist Width b (in)	0	Exist Depth d (in)	0		
New Width b (in)	0	New Depth d (in)	0		
Section Modulus (in^3)			0.00		0.00
Moment of Inertia Strong-Axis (in^4)			0.00		0.00
Moment of Inertia Weak-Axis (in^4)			0.00		0.00
Number of Plies			1		0
Interior Perpemdicular Bearing Width (in)			3.25		
End Perpemdicular Bearing Width (in)			1.625		
Demand Bending Stress (psi)					
fb = M/S			**#DIV/0!**		#DIV/0!
Demand Shear Stress (psi)					
fv=1.5 x (V/bd)			**#DIV/0!**		#DIV/0!
Demand Interior Perpendicular Bearing Stress (psi)					
fPerp-c= (R/bd_b)			**#DIV/0!**		#DIV/0!
Demand End Perpendicular Bearing Stress (psi)					
fPerp-c= (R/bd_b)			**#DIV/0!**		#DIV/0!

Project Name:	Glynn Archer School	Project Code	
Member Information:		Date:	

Members Bending stress F_b (psi)		1500
Members Shear stress F_v (psi)		175
Members Perpendicular Bearing Stress		825
Load duration Factor C_D		1
Wet Service Factor C_M		1
temperature Factor C_t		1
Beam Stability Factor CL		1
Size Factor C_F		1
Flat Use Factor C_{fu}		1
Incising Factor Ci		0.8
Repetitive Member Factor C_r		1.15
Interior Bearing Arear Factor C_b		1.12
End Bearing Arear Factor C_b		1.23
Adjusted Allowable Bending Stress (psi)		
$F'_b=F_b \times C_D \times C_M \times C_t \times C_L \times C_F \times C_{fu} \times C_i \times C_r$		**1380**
Adjusted Allowable Shear Stress (psi)		
$F'_v=F_v \times C_D \times C_M \times C_t \times C_F \times C_{fu} \times C_i$		**140**
Adjusted Allowable perpendicular Int. bearing Stress (psi)		
$F'_{perp\text{-}c}=F_{perp\text{-}c} \times C_M \times C_t \times C_i \times C_b$		**736**
Adjusted Allowable End perpendicular bearing Stress (psi)		
$F'_{perp\text{-}c}=F_{perp\text{-}c} \times C_M \times C_t \times C_i \times C_b$		**812**

Demand Moment (lbs-ft)			0		
Demand Shear (lbs)			0		
Interior Demand Reaction R (lbs)					
End Demand Reaction R (lbs)					
Member Properties:					
Exist Width b (in)	0	Exist Depth d (in)	0		
New Width b (in)	0	New Depth d (in)	0		
Section Modulus (in^3)			0.00		0.00
Moment of Inertia Strong-Axis (in^4)			0.00		0.00
Moment of Inertia Weak-Axis (in^4)			0.00		0.00
Number of Plies			1		0
Interior Perpemdicular Bearing Width (in)			3.25		
End Perpemdicular Bearing Width (in)			1.625		
Demand Bending Stress (psi)					
fb = M/S			**#DIV/0!**		#DIV/0!
Demand Shear Stress (psi)					
fv=1.5 x (V/bd)			**#DIV/0!**		#DIV/0!
Demand Interior Perpendicular Bearing Stress (psi)					
fPerp-c= (R/bd_b)			**#DIV/0!**		#DIV/0!
Demand End Perpendicular Bearing Stress (psi)					
fPerp-c= (R/bd_b)			**#DIV/0!**		#DIV/0!

Project Name:	Glynn Archer School	Project Code	
Member Information:	Auditorium First Floor - 1C1 (SINGLE SPAN)	Date:	

Members Bending stress F_b (psi)		1500
Members Shear stress F_v (psi)		175
Members Perpendicular Bearing Stress		825
Load duration Factor C_D		1
Wet Service Factor C_M		1
temperature Factor C_t		1
Beam Stability Factor CL		1
Size Factor C_F		1
Flat Use Factor C_{fu}		1
Incising Factor Ci		0.8
Repetitive Member Factor C_r		1.15
Interior Bearing Arear Factor C_b		1.07
End Bearing Arear Factor C_b		1.19
Adjusted Allowable Bending Stress (psi)		
$F'_b=F_b \times C_D \times C_M \times C_t \times C_L \times C_F \times C_{fu} \times C_i \times C_r$		**1380**
Adjusted Allowable Shear Stress (psi)		
$F'_v=F_v \times C_D \times C_M \times C_t \times C_F \times C_{fu} \times C_i$		**140**
Adjusted Allowable perpendicular Int. bearing Stress (psi)		
$F'_{perp\text{-}c}=F_{perp\text{-}c} \times C_M \times C_t \times C_i \times C_b$		**703**
Adjusted Allowable End perpendicular bearing Stress (psi)		
$F'_{perp\text{-}c}=F_{perp\text{-}c} \times C_M \times C_t \times C_i \times C_b$		**784**

Demand Moment (lbs-ft)			1488.05		
Demand Shear (lbs)			521.36		
Interior Demand Reaction R (lbs)			521.36		
End Demand Reaction R (lbs)			521.36		
Member Properties:					
Exist Width b (in)	1.63	Exist Depth d (in)	7.50		
New Width b (in)	1.5	New Depth d (in)	7.25		
Section Modulus (in^3)			15.23		13.14
Moment of Inertia Strong-Axis (in^4)			57.13		47.63
Moment of Inertia Weak-Axis (in^4)			2.68		2.04
Number of Plies			1		0
Interior Perpemdicular Bearing Width (in)			5.75		
End Perpemdicular Bearing Width (in)			2		
Demand Bending Stress (psi)					
fb = M/S			**1172**		OK
Demand Shear Stress (psi)					
fv=1.5 x (V/bd)			**64**		OK
Demand Interior Perpendicular Bearing Stress (psi)					
fPerp-c= (R/bd_b)			**56**		OK
Demand End Perpendicular Bearing Stress (psi)					
fPerp-c= (R/bd_b)			**160**		OK

Project Name:	Glynn Archer School	Project Code	
Member Information:	Auditorium First Floor - 1C2 (2 SPANS)	Date:	

Members Bending stress F_b (psi)		1500
Members Shear stress F_v (psi)		175
Members Perpendicular Bearing Stress		825
Load duration Factor C_D		1
Wet Service Factor C_M		1
temperature Factor C_t		1
Beam Stability Factor CL		1
Size Factor C_F		1
Flat Use Factor C_{fu}		1
Incising Factor Ci		0.8
Repetitive Member Factor C_r		1.15
Interior Bearing Arear Factor C_b		1.07
End Bearing Arear Factor C_b		1.19
Adjusted Allowable Bending Stress (psi)		
$F'_b=F_b \times C_D \times C_M \times C_t \times C_L \times C_F \times C_{fu} \times C_i \times C_r$		**1380**
Adjusted Allowable Shear Stress (psi)		
$F'_v=F_v \times C_D \times C_M \times C_t \times C_F \times C_{fu} \times C_i$		**140**
Adjusted Allowable perpendicular Int. bearing Stress (psi)		
$F'_{perp\text{-}c}=F_{perp\text{-}c} \times C_M \times C_t \times C_i \times C_b$		**703**
Adjusted Allowable End perpendicular bearing Stress (psi)		
$F'_{perp\text{-}c}=F_{perp\text{-}c} \times C_M \times C_t \times C_i \times C_b$		**784**

Demand Moment (lbs-ft)			2080.69		
Demand Shear (lbs)			770.63		
Interior Demand Reaction R (lbs)			1541.25		
End Demand Reaction R (lbs)			462.38		
Member Properties:					
Exist Width b (in)	1.63	Exist Depth d (in)	7.50		
New Width b (in)	1.5	New Depth d (in)	7.25		
Section Modulus (in^3)			15.23		13.14
Moment of Inertia Strong-Axis (in^4)			57.13		47.63
Moment of Inertia Weak-Axis (in^4)			2.68		2.04
Number of Plies			1		0
Interior Perpemdicular Bearing Width (in)			5.75		
End Perpemdicular Bearing Width (in)			2		
Demand Bending Stress (psi)					
fb = M/S			**1639**		NO GOOD
Demand Shear Stress (psi)					
fv=1.5 x (V/bd)			**95**		OK
Demand Interior Perpendicular Bearing Stress (psi)					
fPerp-c= (R/bd_b)			**165**		OK
Demand End Perpendicular Bearing Stress (psi)					
fPerp-c= (R/bd_b)			**142**		OK

Project Name:	Glynn Archer School	Project Code	
Member Information:	Auditorium First Floor - 1C3 (SINGLE SPAN)	Date:	

Members Bending stress F_b (psi)		1500
Members Shear stress F_v (psi)		175
Members Perpendicular Bearing Stress		825
Load duration Factor C_D		1
Wet Service Factor C_M		1
temperature Factor C_t		1
Beam Stability Factor CL		1
Size Factor C_F		1
Flat Use Factor C_{fu}		1
Incising Factor Ci		0.8
Repetitive Member Factor C_r		1.15
Interior Bearing Arear Factor C_b		1.07
End Bearing Arear Factor C_b		1.19
Adjusted Allowable Bending Stress (psi)		
$F'_b=F_b \times C_D \times C_M \times C_t \times C_L \times C_F \times C_{fu} \times C_i \times C_r$		**1380**
Adjusted Allowable Shear Stress (psi)		
$F'_v=F_v \times C_D \times C_M \times C_t \times C_F \times C_{fu} \times C_i$		**140**
Adjusted Allowable perpendicular Int. bearing Stress (psi)		
$F'_{perp\text{-}c}=F_{perp\text{-}c} \times C_M \times C_t \times C_i \times C_b$		**705**
Adjusted Allowable End perpendicular bearing Stress (psi)		
$F'_{perp\text{-}c}=F_{perp\text{-}c} \times C_M \times C_t \times C_i \times C_b$		**784**

Demand Moment (lbs-ft)			994.52		
Demand Shear (lbs)			426.22		
Interior Demand Reaction R (lbs)			426.22		
End Demand Reaction R (lbs)			426.22		
Member Properties:					
Exist Width b (in)	1.63	Exist Depth d (in)	7.50		
New Width b (in)	0	New Depth d (in)	0		
Section Modulus (in^3)			15.23		0.00
Moment of Inertia Strong-Axis (in^4)			57.13		0.00
Moment of Inertia Weak-Axis (in^4)			2.68		0.00
Number of Plies			1		0
Interior Perpemdicular Bearing Width (in)			5.5		
End Perpemdicular Bearing Width (in)			2		
Demand Bending Stress (psi)					
fb = M/S			**783**		OK
Demand Shear Stress (psi)					
fv=1.5 x (V/bd)			**52**		OK
Demand Interior Perpendicular Bearing Stress (psi)					
fPerp-c= (R/bd_b)			**48**		OK
Demand End Perpendicular Bearing Stress (psi)					
fPerp-c= (R/bd_b)			**131**		OK

Project Name:	Glynn Archer School	Project Code	
Member Information:	Auditorium First Floor - 1C4 (SINGLE SPAN)	Date:	

Members Bending stress F_b (psi)		1500
Members Shear stress F_v (psi)		175
Members Perpendicular Bearing Stress		825
Load duration Factor C_D		1
Wet Service Factor C_M		1
temperature Factor C_t		1
Beam Stability Factor CL		1
Size Factor C_F		1
Flat Use Factor C_{fu}		1
Incising Factor Ci		0.8
Repetitive Member Factor C_r		1.15
Interior Bearing Arear Factor C_b		1.07
End Bearing Arear Factor C_b		1.07
Adjusted Allowable Bending Stress (psi)		
$F'_b=F_b \times C_D \times C_M \times C_t \times C_L \times C_F \times C_{fu} \times C_i \times C_r$		**1380**
Adjusted Allowable Shear Stress (psi)		
$F'_v=F_v \times C_D \times C_M \times C_t \times C_F \times C_{fu} \times C_i$		**140**
Adjusted Allowable perpendicular Int. bearing Stress (psi)		
$F'_{perp\text{-}c}=F_{perp\text{-}c} \times C_M \times C_t \times C_i \times C_b$		**705**
Adjusted Allowable End perpendicular bearing Stress (psi)		
$F'_{perp\text{-}c}=F_{perp\text{-}c} \times C_M \times C_t \times C_i \times C_b$		**705**

Demand Moment (lbs-ft)			941.95		
Demand Shear (lbs)			414.81		
Interior Demand Reaction R (lbs)			414.81		
End Demand Reaction R (lbs)			414.81		
Member Properties:					
Exist Width b (in)	1.63	Exist Depth d (in)	7.50		
New Width b (in)	0	New Depth d (in)	0		
Section Modulus (in^3)			15.23		0.00
Moment of Inertia Strong-Axis (in^4)			57.13		0.00
Moment of Inertia Weak-Axis (in^4)			2.68		0.00
Number of Plies			1		0
Interior Perpemdicular Bearing Width (in)			5.5		
End Perpemdicular Bearing Width (in)			5.5		
Demand Bending Stress (psi)					
fb = M/S			**742**		OK
Demand Shear Stress (psi)					
fv=1.5 x (V/bd)			**51**		OK
Demand Interior Perpendicular Bearing Stress (psi)					
fPerp-c= (R/bd_b)			**46**		OK
Demand End Perpendicular Bearing Stress (psi)					
fPerp-c= (R/bd_b)			**46**		OK

Building A - First Floor Framing Plan

Beam #	Span (ft)	Beam Length		Width	Depth	trb_w	Live Load (psf)		Adjusted Live	Dead Load (psf)		Adjusted Dead	Total Load	Max Shear	Max Moment
		Feet	Inches				Partition Wall		Load (plf)			Load (plf)	(plf)	(lb)	(lbs-ft)
1A1	6.05	6.00	0.56	5.50	7.50	7.19		50.00	359.38		8.50	61.09	420.47	1568.74	1552.81
1A2	6.92	6.00	11.00	5.50	7.50	7.19		50.00	359.38		8.50	61.09	420.47	1817.65	2514.42
1A3	6.05	6.00	0.56	5.50	7.50	9.90		185.00	1831.69		44.00	435.64	2267.33	8459.23	8373.32
1A4	5.21	5.00	2.50	5.50	7.50	9.90		185.00	1831.69		44.00	435.64	2267.33	7380.63	7688.15
1A5	7.50	7.00	6.00	5.50	7.50	10.70		50.00	534.90		8.50	90.93	625.83	2933.57	4400.36
1A6	5.48	5.00	5.75	6.50	7.50	8.88		100.00	887.50		8.50	75.44	962.94	3297.56	3613.58
1A7	5.69	5.00	8.25	5.50	7.50	9.75		185.00	1803.75		44.00	429.00	2232.75	7936.73	9028.03
1A8	7.58	7.00	7.00	5.50	7.50	9.75		185.00	1803.75		44.00	429.00	2232.75	10446.85	12968.26
1A-1X6	2.00	2.00	0.00	5.50	0.75	0.50		100.00	50.00		8.50	4.25	54.25	67.81	25.39
1ARf-1X6	2.00	2.00	0.00	5.50	0.75	0.50		-254.38	-127.19		8.50	4.25	-122.94	-153.68	-57.54

Building B - First Floor Framing Plan

Beam #	Span (ft)	Beam Length		Width	Depth	trb_w	Live Load (psf)		Adjusted Live	Dead Load (psf)		Adjusted Dead	Total Load	Max Shear	Max Moment
		Feet	Inches				Partition Wall		Load (plf)			Load (plf)	(p1f)	(lb)	(lbs-ft)
1B1	11.96	11.00	11.50	3.25	7.50	11.65		100.00	1165.10		8.50	99.03	1264.13	7558.46	22596.66
1B2	7.66	7.00	7.88	3.25	7.50	11.65		50.00	582.55		8.50	99.03	681.58	3219.74	4035.27
1B3	7.66	7.00	7.88	6.50	7.50	11.72		185.00	2167.97		44.00	515.63	2683.59	12677.05	15888.04
1B4	5.48	5.00	5.75	6.50	7.50	12.48		100.00	1248.00		8.50	106.08	1354.08	4637.02	5081.40
1B5	7.50	7.00	6.00	3.25	7.50	10.70		100.00	1069.79		8.50	90.93	1160.72	5440.90	8161.34
1B6	5.23	5.00	2.75	3.25	7.50	11.65		100.00	1165.10		8.50	99.03	1264.13	4131.48	4320.84
1B7	6.27	6.00	3.25	6.50	7.50	11.72		185.00	2167.97		44.00	515.63	2683.59	10383.10	10658.32
1B8	5.44	5.00	5.25	5.50	7.50	8.88		100.00	887.50		8.50	75.44	962.94	3272.48	3558.83
1B9	10.88	10.00	10.50	5.50	7.50	8.88		100.00	887.50		8.50	75.44	962.94	5235.97	14235.30
1B10	5.25	5.00	3.00	5.50	7.50	8.88		185.00	1641.88		44.00	390.50	2032.38	6668.73	7002.17
1B11	7.58	7.00	7.00	3.25	7.50	6.00		100.00	600.00		8.50	51.00	651.00	3045.97	3781.14
1B12	5.69	5.00	8.25	3.25	7.50	9.75		185.00	1803.75		44.00	429.00	2232.75	7835.14	7294.65
1B-1X6	2.00	2.00	0.00	5.50	0.75	0.50		100.00	50.00		8.50	4.25	54.25	67.81	25.39

Auditorium - First Floor Framing Plan

Beam #	Span (ft)	Beam Length		Width	Depth	trb_w	Live Load (psf)		Adjusted Live	Dead Load (psf)		Adjusted Dead	Total Load	Max Shear	Max Moment
		Feet	Inches				Partition Wall		Load (plf)			Load (plf)	(plf)	(lb)	(lbs-ft)
1C1	8.41	8.00	4.88	5.75	5.63	13.50		100.00	1350.00		8.50	114.75	1464.75	7597.15	10454.17
1C2	8.56	8.00	6.75	5.75	5.63	9.38		100.00	937.50		8.50	79.69	1017.19	5443.54	9322.07
1C3	13.50	13.00	6.00	5.75	5.63	4.21		100.00	420.83		8.50	35.77	456.60	3852.59	10402.01

No. Spans
3
2
3
2
2
2
2
3
2

No. Spans
1
3
3
2
2
2
3
2
1
2
3
3

No. Spans
3
2
2

Project Name:	Glynn Archer School	Project Code	
Member Information:	Building B - First Floor 1B1 (SINGLE SPAN)	Date:	

Members Bending stress F_b (psi)		1500	Demand Moment (lbs-ft)		22596.66		
Members Shear stress F_v (psi)		175	Demand Shear (lbs)		7558.46		
Members Perpendicular Bearing Stress		825	Interior Demand Reaction R (lbs)		7558.46		
			End Demand Reaction R (lbs)		7558.46		
Load duration Factor C_D		1	Member Properties:				
Wet Service Factor C_M		1	Exist Width b (in)	3.25	Exist Depth d (in)	7.5	
temperature Factor C_t		1	New Width b (in)	1.5	New Depth d (in)	7.25	
Beam Stability Factor CL		1	Section Modulus (in^3)			30.47	13.14
Size Factor C_F		1.05	Moment of Inertia Strong-Axis (in^4)			114.26	47.63
Flat Use Factor C_{fu}		1.3	Moment of Inertia Weak-Axis (in^4)			21.46	2.04
Incising Factor Ci		0.8	Number of Plies			1	5
Repetitive Member Factor C_r		1.15	Interior Perpemdicular Bearing Width (in)			3.25	
Interior Bearing Arear Factor C_b		1.00	End Perpemdicular Bearing Width (in)			2	
End Bearing Arear Factor C_b		1.19					
Adjusted Allowable Bending Stress (psi)			Demand Bending Stress (psi)				
$F'_b=F_b \times C_D \times C_M \times C_t \times C_L \times C_F \times C_{fu} \times C_i \times C_r$		**1883.7**	fb = M/S			**2820**	NO GOOD
Adjusted Allowable Shear Stress (psi)			Demand Shear Stress (psi)				
$F'_v=F_v \times C_D \times C_M \times C_t \times C_F \times C_{fu} \times C_i$		**147**	fv=1.5 x (V/bd)			**144**	OK
Adjusted Allowable perpendicular Int. bearing Stress (psi)			Demand Interior Perpendicular Bearing Stress (psi)				
$F'_{perp\text{-}c}=F_{perp\text{-}c} \times C_M \times C_t \times C_i \times C_b$		**660**	fPerp-c= (R/bd_b)			**716**	NO GOOD
Adjusted Allowable End perpendicular bearing Stress (psi)			Demand End Perpendicular Bearing Stress (psi)				
$F'_{perp\text{-}c}=F_{perp\text{-}c} \times C_M \times C_t \times C_i \times C_b$		**823**	fPerp-c= (R/bd_b)			**1163**	NO GOOD

Project Name:	Glynn Archer School	Project Code	
Member Information:	Building A - First Floor 1A5 (3 SPANS)	Date:	

Members Bending stress F_b (psi)		1500
Members Shear stress F_v (psi)		175
Members Perpendicular Bearing Stress		825
Load duration Factor C_D		1
Wet Service Factor C_M		1
temperature Factor C_t		1
Beam Stability Factor CL		1
Size Factor C_F		1.05
Flat Use Factor C_{fu}		1.3
Incising Factor Ci		0.8
Repetitive Member Factor C_r		1.15
Interior Bearing Arear Factor C_b		1.00
End Bearing Arear Factor C_b		1.19
Adjusted Allowable Bending Stress (psi)		
$F'_b=F_b \times C_D \times C_M \times C_t \times C_L \times C_F \times C_{fu} \times C_i \times C_r$		**1883.7**
Adjusted Allowable Shear Stress (psi)		
$F'_v=F_v \times C_D \times C_M \times C_t \times C_F \times C_{fu} \times C_i$		**147**
Adjusted Allowable perpendicular Int. bearing Stress (psi)		
$F'_{perp\text{-}c}=F_{perp\text{-}c} \times C_M \times C_t \times C_i \times C_b$		**660**
Adjusted Allowable End perpendicular bearing Stress (psi)		
$F'_{perp\text{-}c}=F_{perp\text{-}c} \times C_M \times C_t \times C_i \times C_b$		**825**

Demand Moment (lbs-ft)			4035.27		
Demand Shear (lbs)			3219.74		
Interior Demand Reaction R (lbs)			6262.05		
End Demand Reaction R (lbs)			2348.27		
Member Properties:					
Exist Width b (in)	3.25	Exist Depth d (in)	7.50		
New Width b (in)	1.5	New Depth d (in)	7.25		
Section Modulus (in^3)			30.47		13.14
Moment of Inertia Strong-Axis (in^4)			114.26		47.63
Moment of Inertia Weak-Axis (in^4)			21.46		2.04
Number of Plies			1		1
Interior Perpemdicular Bearing Width (in)			12		
End Perpemdicular Bearing Width (in)			6		
Demand Bending Stress (psi)					
fb = M/S			**1110**		OK
Demand Shear Stress (psi)					
fv=1.5 x (V/bd)			**137**		OK
Demand Interior Perpendicular Bearing Stress (psi)					
fPerp-c= (R/bd_b)			**110**		OK
Demand End Perpendicular Bearing Stress (psi)					
fPerp-c= (R/bd_b)			**120**		OK

Project Name:	Glynn Archer School	Project Code	
Member Information:	Building A - First Floor 1A5 (3 SPANS)	Date:	

Members Bending stress F_b (psi)		1500
Members Shear stress F_v (psi)		175
Members Perpendicular Bearing Stress		825
Load duration Factor C_D		1
Wet Service Factor C_M		1
temperature Factor C_t		1
Beam Stability Factor CL		1
Size Factor C_F		1.05
Flat Use Factor C_{fu}		1.3
Incising Factor Ci		0.8
Repetitive Member Factor C_r		1.15
Interior Bearing Arear Factor C_b		1.00
End Bearing Arear Factor C_b		1.19
Adjusted Allowable Bending Stress (psi)		
$F'_b=F_b \times C_D \times C_M \times C_t \times C_L \times C_F \times C_{fu} \times C_i \times C_r$		**1883.7**
Adjusted Allowable Shear Stress (psi)		
$F'_v=F_v \times C_D \times C_M \times C_t \times C_F \times C_{fu} \times C_i$		**147**
Adjusted Allowable perpendicular Int. bearing Stress (psi)		
$F'_{perp\text{-}c}=F_{perp\text{-}c} \times C_M \times C_t \times C_i \times C_b$		**660**
Adjusted Allowable End perpendicular bearing Stress (psi)		
$F'_{perp\text{-}c}=F_{perp\text{-}c} \times C_M \times C_t \times C_i \times C_b$		**823**

Demand Moment (lbs-ft)			15888.04		
Demand Shear (lbs)			12677.05		
Interior Demand Reaction R (lbs)			24655.52		
End Demand Reaction R (lbs)			9245.82		
Member Properties:					
Exist Width b (in)	6.50	Exist Depth d (in)	7.50		
New Width b (in)	1.5	New Depth d (in)	7.25		
Section Modulus (in^3)			60.94		13.14
Moment of Inertia Strong-Axis (in^4)			228.52		47.63
Moment of Inertia Weak-Axis (in^4)			171.64		2.04
Number of Plies			1		8
Interior Perpemdicular Bearing Width (in)			3.25		
End Perpemdicular Bearing Width (in)			2		
Demand Bending Stress (psi)					
fb = M/S			**1148**		OK
Demand Shear Stress (psi)					
fv=1.5 x (V/bd)			**140**		OK
Demand Interior Perpendicular Bearing Stress (psi)					
fPerp-c= (R/bd_b)			**410**		OK
Demand End Perpendicular Bearing Stress (psi)					
fPerp-c= (R/bd_b)			**711**		OK

Project Name:	Glynn Archer School	Project Code	
Member Information:	Building B - First Floor 1B4 (2 SPANS)	Date:	

Members Bending stress F_b (psi)		1500
Members Shear stress F_v (psi)		175
Members Perpendicular Bearing Stress		825
Load duration Factor C_D		1
Wet Service Factor C_M		1
temperature Factor C_t		1
Beam Stability Factor CL		1
Size Factor C_F		1.05
Flat Use Factor C_{fu}		1.3
Incising Factor Ci		0.8
Repetitive Member Factor C_r		1.15
Interior Bearing Arear Factor C_b		1.00
End Bearing Arear Factor C_b		1.19
Adjusted Allowable Bending Stress (psi)		
$F'_b=F_b \times C_D \times C_M \times C_t \times C_L \times C_F \times C_{fu} \times C_i \times C_r$		**1883.7**
Adjusted Allowable Shear Stress (psi)		
$F'_v=F_v \times C_D \times C_M \times C_t \times C_F \times C_{fu} \times C_i$		**147**
Adjusted Allowable perpendicular Int. bearing Stress (psi)		
$F'_{perp\text{-}c}=F_{perp\text{-}c} \times C_M \times C_t \times C_i \times C_b$		**660**
Adjusted Allowable End perpendicular bearing Stress (psi)		
$F'_{perp\text{-}c}=F_{perp\text{-}c} \times C_M \times C_t \times C_i \times C_b$		**823**

Demand Moment (lbs-ft)			5081.40		
Demand Shear (lbs)			4637.02		
Interior Demand Reaction R (lbs)			9274.04		
End Demand Reaction R (lbs)			2782.21		
Member Properties:					
Exist Width b (in)	6.5	Exist Depth d (in)	7.5		
New Width b (in)	1.5	New Depth d (in)	7.25		
Section Modulus (in^3)			60.94		13.14
Moment of Inertia Strong-Axis (in^4)			228.52		47.63
Moment of Inertia Weak-Axis (in^4)			171.64		2.04
Number of Plies			1		0
Interior Perpemdicular Bearing Width (in)			3.25		
End Perpemdicular Bearing Width (in)			2		
Demand Bending Stress (psi)					
fb = M/S			**1001**		OK
Demand Shear Stress (psi)					
fv=1.5 x (V/bd)			**143**		OK
Demand Interior Perpendicular Bearing Stress (psi)					
fPerp-c= (R/bd_b)			**439**		OK
Demand End Perpendicular Bearing Stress (psi)					
fPerp-c= (R/bd_b)			**214**		OK

Project Name:	Glynn Archer School	Project Code	
Member Information:	Building B - First Floor 1B5 (2 SPANS)	Date:	

Members Bending stress F_b (psi)		1500	Demand Moment (lbs-ft)		8161.34		
Members Shear stress F_v (psi)		175	Demand Shear (lbs)		5440.90		
Members Perpendicular Bearing Stress		825	Interior Demand Reaction R (lbs)		10881.79		
			End Demand Reaction R (lbs)		3264.54		
Load duration Factor C_D		1	Member Properties:				
Wet Service Factor C_M		1	Exist Width b (in)	3.25	Exist Depth d (in)	7.5	
temperature Factor C_t		1	New Width b (in)	1.5	New Depth d (in)	7.25	
Beam Stability Factor CL		1	Section Modulus (in^3)			30.47	13.14
Size Factor C_F		1	Moment of Inertia Strong-Axis (in^4)			114.26	47.63
Flat Use Factor C_{fu}		1	Moment of Inertia Weak-Axis (in^4)			21.46	2.04
Incising Factor Ci		0.8	Number of Plies			1	4
Repetitive Member Factor C_r		1.15	Interior Perpemdicular Bearing Width (in)			3.25	
Interior Bearing Arear Factor C_b		1.12	End Perpemdicular Bearing Width (in)			2	
End Bearing Arear Factor C_b		1.19					
Adjusted Allowable Bending Stress (psi)			Demand Bending Stress (psi)				
$F'_b=F_b \times C_D \times C_M \times C_t \times C_L \times C_F \times C_{fu} \times C_i \times C_r$		**1380**	fb = M/S			**1180**	OK
Adjusted Allowable Shear Stress (psi)			Demand Shear Stress (psi)				
$F'_v=F_v \times C_D \times C_M \times C_t \times C_F \times C_{fu} \times C_i$		**140**	fv=1.5 x (V/bd)			**120**	OK
Adjusted Allowable perpendicular Int. bearing Stress (psi)			Demand Interior Perpendicular Bearing Stress (psi)				
$F'_{perp\text{-}c}=F_{perp\text{-}c} \times C_M \times C_t \times C_i \times C_b$		**736**	fPerp-c= (R/bd_b)			**362**	OK
Adjusted Allowable End perpendicular bearing Stress (psi)			Demand End Perpendicular Bearing Stress (psi)				
$F'_{perp\text{-}c}=F_{perp\text{-}c} \times C_M \times C_t \times C_i \times C_b$		**784**	fPerp-c= (R/bd_b)			**502**	OK

Project Name:	Glynn Archer School	Project Code	
Member Information:	Building B - First Floor 1B6 (2 SPANS)	Date:	

Members Bending stress F_b (psi)		1500
Members Shear stress F_v (psi)		175
Members Perpendicular Bearing Stress		825
Load duration Factor C_D		1
Wet Service Factor C_M		1
temperature Factor C_t		1
Beam Stability Factor CL		1
Size Factor C_F		1.05
Flat Use Factor C_{fu}		1.3
Incising Factor Ci		0.8
Repetitive Member Factor C_r		1.15
Interior Bearing Arear Factor C_b		1.12
End Bearing Arear Factor C_b		1.19
Adjusted Allowable Bending Stress (psi)		
$F'_b=F_b \times C_D \times C_M \times C_t \times C_L \times C_F \times C_{fu} \times C_i \times C_r$		**1883.7**
Adjusted Allowable Shear Stress (psi)		
$F'_v=F_v \times C_D \times C_M \times C_t \times C_F \times C_{fu} \times C_i$		**147**
Adjusted Allowable perpendicular Int. bearing Stress (psi)		
$F'_{perp\text{-}c}=F_{perp\text{-}c} \times C_M \times C_t \times C_i \times C_b$		**736**
Adjusted Allowable End perpendicular bearing Stress (psi)		
$F'_{perp\text{-}c}=F_{perp\text{-}c} \times C_M \times C_t \times C_i \times C_b$		**823**

Demand Moment (lbs-ft)			4320.84		
Demand Shear (lbs)			4131.48		
Interior Demand Reaction R (lbs)			8262.96		
End Demand Reaction R (lbs)			2478.89		
Member Properties:					
Exist Width b (in)	3.25	Exist Depth d (in)	7.5		
New Width b (in)	1.5	New Depth d (in)	7.25		
Section Modulus (in^3)			30.47		13.14
Moment of Inertia Strong-Axis (in^4)			114.26		47.63
Moment of Inertia Weak-Axis (in^4)			21.46		2.04
Number of Plies			1		2
Interior Perpemdicular Bearing Width (in)			3.25		
End Perpemdicular Bearing Width (in)			2		
Demand Bending Stress (psi)					
fb = M/S			**914**		OK
Demand Shear Stress (psi)					
fv=1.5 x (V/bd)			**134**		OK
Demand Interior Perpendicular Bearing Stress (psi)					
fPerp-c= (R/bd_b)			**407**		OK
Demand End Perpendicular Bearing Stress (psi)					
fPerp-c= (R/bd_b)			**381**		OK

Project Name:	Glynn Archer School	Project Code	
Member Information:	Building A - First Floor 1A5 (3 SPANS)	Date:	

Members Bending stress F_b (psi)		1500
Members Shear stress F_v (psi)		175
Members Perpendicular Bearing Stress		825
Load duration Factor C_D		1
Wet Service Factor C_M		1
temperature Factor C_t		1
Beam Stability Factor CL		1
Size Factor C_F		1.05
Flat Use Factor C_{fu}		1.3
Incising Factor Ci		0.8
Repetitive Member Factor C_r		1.15
Interior Bearing Arear Factor C_b		1.00
End Bearing Arear Factor C_b		1.19
Adjusted Allowable Bending Stress (psi)		
$F'_b=F_b \times C_D \times C_M \times C_t \times C_L \times C_F \times C_{fu} \times C_i \times C_r$		**1883.7**
Adjusted Allowable Shear Stress (psi)		
$F'_v=F_v \times C_D \times C_M \times C_t \times C_F \times C_{fu} \times C_i$		**147**
Adjusted Allowable perpendicular Int. bearing Stress (psi)		
$F'_{perp\text{-}c}=F_{perp\text{-}c} \times C_M \times C_t \times C_i \times C_b$		**660**
Adjusted Allowable End perpendicular bearing Stress (psi)		
$F'_{perp\text{-}c}=F_{perp\text{-}c} \times C_M \times C_t \times C_i \times C_b$		**823**

Demand Moment (lbs-ft)			10658.32		
Demand Shear (lbs)			10383.10		
Interior Demand Reaction R (lbs)			20194.04		
End Demand Reaction R (lbs)			7572.77		
Member Properties:					
Exist Width b (in)	6.50	Exist Depth d (in)	7.50		
New Width b (in)	1.5	New Depth d (in)	7.25		
Section Modulus (in^3)			60.94		13.14
Moment of Inertia Strong-Axis (in^4)			228.52		47.63
Moment of Inertia Weak-Axis (in^4)			171.64		2.04
Number of Plies			1		1
Interior Perpemdicular Bearing Width (in)			3.25		
End Perpemdicular Bearing Width (in)			2		
Demand Bending Stress (psi)					
fb = M/S			**1727**		OK
Demand Shear Stress (psi)					
fv=1.5 x (V/bd)			**261**		NO GOOD
Demand Interior Perpendicular Bearing Stress (psi)					
fPerp-c= (R/bd_b)			**777**		NO GOOD
Demand End Perpendicular Bearing Stress (psi)					
fPerp-c= (R/bd_b)			**583**		OK

Project Name:	Glynn Archer School	Project Code	
Member Information:	Building B - First Floor 1B6 (2 SPANS)	Date:	

Members Bending stress F_b (psi)		1500
Members Shear stress F_v (psi)		175
Members Perpendicular Bearing Stress		825
Load duration Factor C_D		1
Wet Service Factor C_M		1
temperature Factor C_t		1
Beam Stability Factor CL		1
Size Factor C_F		1.05
Flat Use Factor C_{fu}		1.3
Incising Factor Ci		0.8
Repetitive Member Factor C_r		1.15
Interior Bearing Arear Factor C_b		1.12
End Bearing Arear Factor C_b		1.19
Adjusted Allowable Bending Stress (psi)		
$F'_b=F_b \times C_D \times C_M \times C_t \times C_L \times C_F \times C_{fu} \times C_i \times C_r$		**1883.7**
Adjusted Allowable Shear Stress (psi)		
$F'_v=F_v \times C_D \times C_M \times C_t \times C_F \times C_{fu} \times C_i$		**147**
Adjusted Allowable perpendicular Int. bearing Stress (psi)		
$F'_{perp\text{-}c}=F_{perp\text{-}c} \times C_M \times C_t \times C_i \times C_b$		**736**
Adjusted Allowable End perpendicular bearing Stress (psi)		
$F'_{perp\text{-}c}=F_{perp\text{-}c} \times C_M \times C_t \times C_i \times C_b$		**823**

Demand Moment (lbs-ft)			3558.83		
Demand Shear (lbs)			3272.48		
Interior Demand Reaction R (lbs)			6544.97		
End Demand Reaction R (lbs)			1963.49		
Member Properties:					
Exist Width b (in)	5.50	Exist Depth d (in)	7.50		
New Width b (in)	1.5	New Depth d (in)	7.25		
Section Modulus (in^3)			51.56		13.14
Moment of Inertia Strong-Axis (in^4)			193.36		47.63
Moment of Inertia Weak-Axis (in^4)			103.98		2.04
Number of Plies			1		0
Interior Perpemdicular Bearing Width (in)			3.25		
End Perpemdicular Bearing Width (in)			2		
Demand Bending Stress (psi)					
fb = M/S			**828**		OK
Demand Shear Stress (psi)					
fv=1.5 x (V/bd)			**119**		OK
Demand Interior Perpendicular Bearing Stress (psi)					
fPerp-c= (R/bd_b)			**366**		OK
Demand End Perpendicular Bearing Stress (psi)					
fPerp-c= (R/bd_b)			**178**		OK

Project Name:	Glynn Archer School	Project Code	
Member Information:	Building B - First Floor 1B1 (SINGLE SPAN)	Date:	

Members Bending stress F_b (psi)		1500	Demand Moment (lbs-ft)		14235.30		
Members Shear stress F_v (psi)		175	Demand Shear (lbs)		5235.97		
Members Perpendicular Bearing Stress		825	Interior Demand Reaction R (lbs)		5235.97		
			End Demand Reaction R (lbs)		5235.97		
Load duration Factor C_D		1	Member Properties:				
Wet Service Factor C_M		1	Exist Width b (in)	5.50	Exist Depth d (in)	7.50	
temperature Factor C_t		1	New Width b (in)	1.5	New Depth d (in)	7.25	
Beam Stability Factor CL		1	Section Modulus (in^3)			51.56	13.14
Size Factor C_F		1.05	Moment of Inertia Strong-Axis (in^4)			193.36	47.63
Flat Use Factor C_{fu}		1.3	Moment of Inertia Weak-Axis (in^4)			103.98	2.04
Incising Factor Ci		0.8	Number of Plies			1	3
Repetitive Member Factor C_r		1.15	Interior Perpemdicular Bearing Width (in)			3.25	
Interior Bearing Arear Factor C_b		1.00	End Perpemdicular Bearing Width (in)			2	
End Bearing Arear Factor C_b		1.19					
Adjusted Allowable Bending Stress (psi)			Demand Bending Stress (psi)				
$F'_b=F_b \times C_D \times C_M \times C_t \times C_L \times C_F \times C_{fu} \times C_i \times C_r$		**1883.7**	fb = M/S			**1878**	OK
Adjusted Allowable Shear Stress (psi)			Demand Shear Stress (psi)				
$F'_v=F_v \times C_D \times C_M \times C_t \times C_F \times C_{fu} \times C_i$		**147**	fv=1.5 x (V/bd)			**106**	OK
Adjusted Allowable perpendicular Int. bearing Stress (psi)			Demand Interior Perpendicular Bearing Stress (psi)				
$F'_{perp\text{-}c}=F_{perp\text{-}c} \times C_M \times C_t \times C_i \times C_b$		**660**	fPerp-c= (R/bd_b)			**293**	OK
Adjusted Allowable End perpendicular bearing Stress (psi)			Demand End Perpendicular Bearing Stress (psi)				
$F'_{perp\text{-}c}=F_{perp\text{-}c} \times C_M \times C_t \times C_i \times C_b$		**823**	fPerp-c= (R/bd_b)			**476**	OK

Project Name:	Glynn Archer School	Project Code	
Member Information:	Building B - First Floor 1B6 (2 SPANS)	Date:	

Members Bending stress F_b (psi)		1500	Demand Moment (lbs-ft)		7002.17		
Members Shear stress F_v (psi)		175	Demand Shear (lbs)		6668.73		
Members Perpendicular Bearing Stress		825	Interior Demand Reaction R (lbs)		13337.46		
			End Demand Reaction R (lbs)		4001.24		
Load duration Factor C_D		1	Member Properties:				
Wet Service Factor C_M		1	Exist Width b (in)	5.50	Exist Depth d (in)	7.50		
temperature Factor C_t		1	New Width b (in)	1.5	New Depth d (in)	7.25		
Beam Stability Factor CL		1	Section Modulus (in^3)			51.56		13.14
Size Factor C_F		1.05	Moment of Inertia Strong-Axis (in^4)			193.36		47.63
Flat Use Factor C_{fu}		1.3	Moment of Inertia Weak-Axis (in^4)			103.98		2.04
Incising Factor Ci		0.8	Number of Plies			1		0
Repetitive Member Factor C_r		1.15	Interior Perpemdicular Bearing Width (in)			3.25		
Interior Bearing Arear Factor C_b		1.12	End Perpemdicular Bearing Width (in)			2		
End Bearing Arear Factor C_b		1.19						
Adjusted Allowable Bending Stress (psi)			Demand Bending Stress (psi)					
$F'_b=F_b \times C_D \times C_M \times C_t \times C_L \times C_F \times C_{fu} \times C_i \times C_r$		**1883.7**	fb = M/S			**1630**		OK
Adjusted Allowable Shear Stress (psi)			Demand Shear Stress (psi)					
$F'_v=F_v \times C_D \times C_M \times C_t \times C_F \times C_{fu} \times C_i$		**147**	fv=1.5 x (V/bd)			**242**		NO GOOD
Adjusted Allowable perpendicular Int. bearing Stress (psi)			Demand Interior Perpendicular Bearing Stress (psi)					
$F'_{perp\text{-}c}=F_{perp\text{-}c} \times C_M \times C_t \times C_i \times C_b$		**736**	fPerp-c= (R/bd_b)			**746**		NO GOOD
Adjusted Allowable End perpendicular bearing Stress (psi)			Demand End Perpendicular Bearing Stress (psi)					
$F'_{perp\text{-}c}=F_{perp\text{-}c} \times C_M \times C_t \times C_i \times C_b$		**823**	fPerp-c= (R/bd_b)			**364**		OK

Project Name:	Glynn Archer School	Project Code	
Member Information:	Building B - First Floor 1B6 (3 SPANS)	Date:	

Members Bending stress F_b (psi)		1500
Members Shear stress F_v (psi)		175
Members Perpendicular Bearing Stress		825
Load duration Factor C_D		1
Wet Service Factor C_M		1
temperature Factor C_t		1
Beam Stability Factor CL		1
Size Factor C_F		1.05
Flat Use Factor C_{fu}		1.3
Incising Factor Ci		0.8
Repetitive Member Factor C_r		1.15
Interior Bearing Arear Factor C_b		1.12
End Bearing Arear Factor C_b		1.19
Adjusted Allowable Bending Stress (psi)		
$F'_b=F_b \times C_D \times C_M \times C_t \times C_L \times C_F \times C_{fu} \times C_i \times C_r$		**1883.7**
Adjusted Allowable Shear Stress (psi)		
$F'_v=F_v \times C_D \times C_M \times C_t \times C_F \times C_{fu} \times C_i$		**147**
Adjusted Allowable perpendicular Int. bearing Stress (psi)		
$F'_{perp\text{-}c}=F_{perp\text{-}c} \times C_M \times C_t \times C_i \times C_b$		**736**
Adjusted Allowable End perpendicular bearing Stress (psi)		
$F'_{perp\text{-}c}=F_{perp\text{-}c} \times C_M \times C_t \times C_i \times C_b$		**823**

Demand Moment (lbs-ft)			3781.14		
Demand Shear (lbs)			3045.97		
Interior Demand Reaction R (lbs)			5924.10		
End Demand Reaction R (lbs)			2221.54		
Member Properties:					
Exist Width b (in)	3.25	Exist Depth d (in)	7.50		
New Width b (in)	1.5	New Depth d (in)	7.25		
Section Modulus (in^3)			30.47		13.14
Moment of Inertia Strong-Axis (in^4)			114.26		47.63
Moment of Inertia Weak-Axis (in^4)			21.46		2.04
Number of Plies			1		1
Interior Perpemdicular Bearing Width (in)			3.25		
End Perpemdicular Bearing Width (in)			2		
Demand Bending Stress (psi)					
fb = M/S			**1040**		OK
Demand Shear Stress (psi)					
fv=1.5 x (V/bd)			**130**		OK
Demand Interior Perpendicular Bearing Stress (psi)					
fPerp-c= (R/bd_b)			**384**		OK
Demand End Perpendicular Bearing Stress (psi)					
fPerp-c= (R/bd_b)			**342**		OK

Project Name:	Glynn Archer School	Project Code	
Member Information:	Building A - First Floor 1A5 (3 SPANS)	Date:	

Members Bending stress F_b (psi)		1500
Members Shear stress F_v (psi)		175
Members Perpendicular Bearing Stress		825
Load duration Factor C_D		1
Wet Service Factor C_M		1
temperature Factor C_t		1
Beam Stability Factor CL		1
Size Factor C_F		1.05
Flat Use Factor C_{fu}		1.3
Incising Factor Ci		0.8
Repetitive Member Factor C_r		1.15
Interior Bearing Arear Factor C_b		1.00
End Bearing Arear Factor C_b		1.19
Adjusted Allowable Bending Stress (psi)		
$F'_b=F_b \times C_D \times C_M \times C_t \times C_L \times C_F \times C_{fu} \times C_i \times C_r$		**1883.7**
Adjusted Allowable Shear Stress (psi)		
$F'_v=F_v \times C_D \times C_M \times C_t \times C_F \times C_{fu} \times C_i$		**147**
Adjusted Allowable perpendicular Int. bearing Stress (psi)		
$F'_{perp\text{-}c}=F_{perp\text{-}c} \times C_M \times C_t \times C_i \times C_b$		**660**
Adjusted Allowable End perpendicular bearing Stress (psi)		
$F'_{perp\text{-}c}=F_{perp\text{-}c} \times C_M \times C_t \times C_i \times C_b$		**823**

Demand Moment (lbs-ft)			7294.65		
Demand Shear (lbs)			7835.14		
Interior Demand Reaction R (lbs)			15238.52		
End Demand Reaction R (lbs)			5714.44		
Member Properties:					
Exist Width b (in)	3.25	Exist Depth d (in)	7.50		
New Width b (in)	1.5	New Depth d (in)	7.25		
Section Modulus (in^3)			30.47		13.14
Moment of Inertia Strong-Axis (in^4)			114.26		47.63
Moment of Inertia Weak-Axis (in^4)			21.46		2.04
Number of Plies			1		4
Interior Perpemdicular Bearing Width (in)			3.25		
End Perpemdicular Bearing Width (in)			2		
Demand Bending Stress (psi)					
fb = M/S			**1054**		OK
Demand Shear Stress (psi)					
fv=1.5 x (V/bd)			**173**		NO GOOD
Demand Interior Perpendicular Bearing Stress (psi)					
fPerp-c= (R/bd_b)			**507**		OK
Demand End Perpendicular Bearing Stress (psi)					
fPerp-c= (R/bd_b)			**879**		NO GOOD

Project Name:	Glynn Archer School	Project Code	
Member Information:	Building B - First floor Wood 1x6 Nominal Wood Sheathing	Date:	

Members Bending stress F_b (psi)		1500
Members Shear stress F_v (psi)		175
Members Perpendicular Bearing Stress		825
Load duration Factor C_D		1
Wet Service Factor C_M		1
temperature Factor C_t		1
Beam Stability Factor CL		1
Size Factor C_F		1
Flat Use Factor C_{fu}		1
Incising Factor Ci		0.8
Repetitive Member Factor C_r		1.15
Interior Bearing Arear Factor C_b		1.23
End Bearing Arear Factor C_b		1.23
Adjusted Allowable Bending Stress (psi)		
$F'_b=F_b \times C_D \times C_M \times C_t \times C_L \times C_F \times C_{fu} \times C_i \times C_r$		**1380**
Adjusted Allowable Shear Stress (psi)		
$F'_v=F_v \times C_D \times C_M \times C_t \times C_F \times C_{fu} \times C_i$		**140**
Adjusted Allowable perpendicular Int. bearing Stress (psi)		
$F'_{perp\text{-}c}=F_{perp\text{-}c} \times C_M \times C_t \times C_i \times C_b$		**812**
Adjusted Allowable End perpendicular bearing Stress (psi)		
$F'_{perp\text{-}c}=F_{perp\text{-}c} \times C_M \times C_t \times C_i \times C_b$		**812**

Demand Moment (lbs-ft)			25.39		
Demand Shear (lbs)			67.81		
Interior Demand Reaction R (lbs)			135.63		
End Demand Reaction R (lbs)			40.69		
Member Properties:					
Exist Width b (in)	5.5	Exist Depth d (in)	0.75		
New Width b (in)	0	New Depth d (in)	0		
Section Modulus (in^3)			0.52		0.00
Moment of Inertia Strong-Axis (in^4)			0.19		0.00
Moment of Inertia Weak-Axis (in^4)			10.40		0.00
Number of Plies			1		0
Interior Perpemdicular Bearing Width (in)			1.625		
End Perpemdicular Bearing Width (in)			1.625		
Demand Bending Stress (psi)					
fb = M/S			**591**		OK
Demand Shear Stress (psi)					
fv=1.5 x (V/bd)			**25**		OK
Demand Interior Perpendicular Bearing Stress (psi)					
fPerp-c= (R/bd_b)			**15**		OK
Demand End Perpendicular Bearing Stress (psi)					
fPerp-c= (R/bd_b)			**5**		OK

Project Name:	Glynn Archer School	Project Code	
Member Information:	Building A - First Floor 1A5 (3 SPANS)	Date:	

Members Bending stress F_b (psi)		1500
Members Shear stress F_v (psi)		175
Members Perpendicular Bearing Stress		825
Load duration Factor C_D		1
Wet Service Factor C_M		1
temperature Factor C_t		1
Beam Stability Factor CL		1
Size Factor C_F		1.05
Flat Use Factor C_{fu}		1.3
Incising Factor Ci		0.8
Repetitive Member Factor C_r		1.15
Interior Bearing Arear Factor C_b		1.00
End Bearing Arear Factor C_b		1.19
Adjusted Allowable Bending Stress (psi)		
$F'_b=F_b \times C_D \times C_M \times C_t \times C_L \times C_F \times C_{fu} \times C_i \times C_r$		**1883.7**
Adjusted Allowable Shear Stress (psi)		
$F'_v=F_v \times C_D \times C_M \times C_t \times C_F \times C_{fu} \times C_i$		**147**
Adjusted Allowable perpendicular Int. bearing Stress (psi)		
$F'_{perp\text{-}c}=F_{perp\text{-}c} \times C_M \times C_t \times C_i \times C_b$		**660**
Adjusted Allowable End perpendicular bearing Stress (psi)		
$F'_{perp\text{-}c}=F_{perp\text{-}c} \times C_M \times C_t \times C_i \times C_b$		**825**

Demand Moment (lbs-ft)			1552.81		
Demand Shear (lbs)			1568.74		
Interior Demand Reaction R (lbs)			3051.03		
End Demand Reaction R (lbs)			1144.13		
Member Properties:					
Exist Width b (in)	5.50	Exist Depth d (in)	7.50		
New Width b (in)	1.5	New Depth d (in)	7.25		
Section Modulus (in^3)			51.56		13.14
Moment of Inertia Strong-Axis (in^4)			193.36		47.63
Moment of Inertia Weak-Axis (in^4)			103.98		2.04
Number of Plies			1		0
Interior Perpemdicular Bearing Width (in)			12		
End Perpemdicular Bearing Width (in)			6		
Demand Bending Stress (psi)					
fb = M/S			**361**		OK
Demand Shear Stress (psi)					
fv=1.5 x (V/bd)			**57**		OK
Demand Interior Perpendicular Bearing Stress (psi)					
fPerp-c= (R/bd_b)			**46**		OK
Demand End Perpendicular Bearing Stress (psi)					
fPerp-c= (R/bd_b)			**35**		OK

Project Name:	Glynn Archer School	Project Code	
Member Information:	Building B - First Floor 1B4 (2 SPANS)	Date:	

Members Bending stress F_b (psi)		1500
Members Shear stress F_v (psi)		175
Members Perpendicular Bearing Stress		825
Load duration Factor C_D		1
Wet Service Factor C_M		1
temperature Factor C_t		1
Beam Stability Factor CL		1
Size Factor C_F		1.05
Flat Use Factor C_{fu}		1.3
Incising Factor Ci		0.8
Repetitive Member Factor C_r		1.15
Interior Bearing Arear Factor C_b		1.00
End Bearing Arear Factor C_b		1.19
Adjusted Allowable Bending Stress (psi)		
$F'_b=F_b \times C_D \times C_M \times C_t \times C_L \times C_F \times C_{fu} \times C_i \times C_r$		**1883.7**
Adjusted Allowable Shear Stress (psi)		
$F'_v=F_v \times C_D \times C_M \times C_t \times C_F \times C_{fu} \times C_i$		**147**
Adjusted Allowable perpendicular Int. bearing Stress (psi)		
$F'_{perp\text{-}c}=F_{perp\text{-}c} \times C_M \times C_t \times C_i \times C_b$		**660**
Adjusted Allowable End perpendicular bearing Stress (psi)		
$F'_{perp\text{-}c}=F_{perp\text{-}c} \times C_M \times C_t \times C_i \times C_b$		**823**

Demand Moment (lbs-ft)			2514.42		
Demand Shear (lbs)			1817.65		
Interior Demand Reaction R (lbs)			3635.30		
End Demand Reaction R (lbs)			1090.59		
Member Properties:					
Exist Width b (in)	5.50	Exist Depth d (in)	7.50		
New Width b (in)	1.5	New Depth d (in)	7.25		
Section Modulus (in^3)			51.56		13.14
Moment of Inertia Strong-Axis (in^4)			193.36		47.63
Moment of Inertia Weak-Axis (in^4)			103.98		2.04
Number of Plies			1		0
Interior Perpemdicular Bearing Width (in)			3.25		
End Perpemdicular Bearing Width (in)			2		
Demand Bending Stress (psi)					
fb = M/S			**585**		OK
Demand Shear Stress (psi)					
fv=1.5 x (V/bd)			**66**		OK
Demand Interior Perpendicular Bearing Stress (psi)					
fPerp-c= (R/bd_b)			**203**		OK
Demand End Perpendicular Bearing Stress (psi)					
fPerp-c= (R/bd_b)			**99**		OK

Project Name:	Glynn Archer School	Project Code	
Member Information:	Building A - First Floor 1A5 (3 SPANS)	Date:	

Members Bending stress F_b (psi)		1500
Members Shear stress F_v (psi)		175
Members Perpendicular Bearing Stress		825
Load duration Factor C_D		1
Wet Service Factor C_M		1
temperature Factor C_t		1
Beam Stability Factor CL		1
Size Factor C_F		1.05
Flat Use Factor C_{fu}		1.3
Incising Factor Ci		0.8
Repetitive Member Factor C_r		1.15
Interior Bearing Arear Factor C_b		1.00
End Bearing Arear Factor C_b		1.19
Adjusted Allowable Bending Stress (psi)		
$F'_b=F_b \times C_D \times C_M \times C_t \times C_L \times C_F \times C_{fu} \times C_i \times C_r$		**1883.7**
Adjusted Allowable Shear Stress (psi)		
$F'_v=F_v \times C_D \times C_M \times C_t \times C_F \times C_{fu} \times C_i$		**147**
Adjusted Allowable perpendicular Int. bearing Stress (psi)		
$F'_{perp\text{-}c}=F_{perp\text{-}c} \times C_M \times C_t \times C_i \times C_b$		**660**
Adjusted Allowable End perpendicular bearing Stress (psi)		
$F'_{perp\text{-}c}=F_{perp\text{-}c} \times C_M \times C_t \times C_i \times C_b$		**825**

Demand Moment (lbs-ft)			8373.32		
Demand Shear (lbs)			8459.23		
Interior Demand Reaction R (lbs)			16452.31		
End Demand Reaction R (lbs)			6169.61		
Member Properties:					
Exist Width b (in)	5.50	Exist Depth d (in)	7.50		
New Width b (in)	1.5	New Depth d (in)	7.25		
Section Modulus (in^3)			51.56		13.14
Moment of Inertia Strong-Axis (in^4)			193.36		47.63
Moment of Inertia Weak-Axis (in^4)			103.98		2.04
Number of Plies			1		0
Interior Perpemdicular Bearing Width (in)			12		
End Perpemdicular Bearing Width (in)			6		
Demand Bending Stress (psi)					
fb = M/S			**1949**		NO GOOD
Demand Shear Stress (psi)					
fv=1.5 x (V/bd)			**308**		NO GOOD
Demand Interior Perpendicular Bearing Stress (psi)					
fPerp-c= (R/bd_b)			**249**		OK
Demand End Perpendicular Bearing Stress (psi)					
fPerp-c= (R/bd_b)			**187**		OK

Project Name:	Glynn Archer School	Project Code	
Member Information:	Building B - First Floor 1B4 (2 SPANS)	Date:	

Members Bending stress F_b (psi)		1500
Members Shear stress F_v (psi)		175
Members Perpendicular Bearing Stress		825
Load duration Factor C_D		1
Wet Service Factor C_M		1
temperature Factor C_t		1
Beam Stability Factor CL		1
Size Factor C_F		1.05
Flat Use Factor C_{fu}		1.3
Incising Factor Ci		0.8
Repetitive Member Factor C_r		1.15
Interior Bearing Arear Factor C_b		1.00
End Bearing Arear Factor C_b		1.19
Adjusted Allowable Bending Stress (psi)		
$F'_b=F_b \times C_D \times C_M \times C_t \times C_L \times C_F \times C_{fu} \times C_i \times C_r$		**1883.7**
Adjusted Allowable Shear Stress (psi)		
$F'_v=F_v \times C_D \times C_M \times C_t \times C_F \times C_{fu} \times C_i$		**147**
Adjusted Allowable perpendicular Int. bearing Stress (psi)		
$F'_{perp\text{-}c}=F_{perp\text{-}c} \times C_M \times C_t \times C_i \times C_b$		**660**
Adjusted Allowable End perpendicular bearing Stress (psi)		
$F'_{perp\text{-}c}=F_{perp\text{-}c} \times C_M \times C_t \times C_i \times C_b$		**823**

Demand Moment (lbs-ft)			7688.15		
Demand Shear (lbs)			7380.63		
Interior Demand Reaction R (lbs)			14761.26		
End Demand Reaction R (lbs)			4428.38		
Member Properties:					
Exist Width b (in)	5.50	Exist Depth d (in)	7.50		
New Width b (in)	1.5	New Depth d (in)	7.25		
Section Modulus (in^3)			51.56		13.14
Moment of Inertia Strong-Axis (in^4)			193.36		47.63
Moment of Inertia Weak-Axis (in^4)			103.98		2.04
Number of Plies			1		0
Interior Perpemdicular Bearing Width (in)			3.25		
End Perpemdicular Bearing Width (in)			2		
Demand Bending Stress (psi)					
fb = M/S			**1789**		OK
Demand Shear Stress (psi)					
fv=1.5 x (V/bd)			**268**		NO GOOD
Demand Interior Perpendicular Bearing Stress (psi)					
fPerp-c= (R/bd_b)			**826**		NO GOOD
Demand End Perpendicular Bearing Stress (psi)					
fPerp-c= (R/bd_b)			**403**		OK

Project Name:	Glynn Archer School	Project Code	
Member Information:	Building B - First Floor 1B4 (2 SPANS)	Date:	

Members Bending stress F_b (psi)		1500
Members Shear stress F_v (psi)		175
Members Perpendicular Bearing Stress		825
Load duration Factor C_D		1
Wet Service Factor C_M		1
temperature Factor C_t		1
Beam Stability Factor CL		1
Size Factor C_F		1.05
Flat Use Factor C_{fu}		1.3
Incising Factor Ci		0.8
Repetitive Member Factor C_r		1.15
Interior Bearing Arear Factor C_b		1.00
End Bearing Arear Factor C_b		1.19
Adjusted Allowable Bending Stress (psi)		
$F'_b=F_b \times C_D \times C_M \times C_t \times C_L \times C_F \times C_{fu} \times C_i \times C_r$		**1883.7**
Adjusted Allowable Shear Stress (psi)		
$F'_v=F_v \times C_D \times C_M \times C_t \times C_F \times C_{fu} \times C_i$		**147**
Adjusted Allowable perpendicular Int. bearing Stress (psi)		
$F'_{perp\text{-}c}=F_{perp\text{-}c} \times C_M \times C_t \times C_i \times C_b$		**660**
Adjusted Allowable End perpendicular bearing Stress (psi)		
$F'_{perp\text{-}c}=F_{perp\text{-}c} \times C_M \times C_t \times C_i \times C_b$		**823**

Demand Moment (lbs-ft)			4400.36		
Demand Shear (lbs)			2933.57		
Interior Demand Reaction R (lbs)			5867.14		
End Demand Reaction R (lbs)			1760.14		
Member Properties:					
Exist Width b (in)	5.50	Exist Depth d (in)	7.50		
New Width b (in)	1.5	New Depth d (in)	7.25		
Section Modulus (in^3)			51.56		13.14
Moment of Inertia Strong-Axis (in^4)			193.36		47.63
Moment of Inertia Weak-Axis (in^4)			103.98		2.04
Number of Plies			1		2
Interior Perpemdicular Bearing Width (in)			3.25		
End Perpemdicular Bearing Width (in)			2		
Demand Bending Stress (psi)					
fb = M/S			**678**		OK
Demand Shear Stress (psi)					
fv=1.5 x (V/bd)			**70**		OK
Demand Interior Perpendicular Bearing Stress (psi)					
fPerp-c= (R/bd_b)			**212**		OK
Demand End Perpendicular Bearing Stress (psi)					
fPerp-c= (R/bd_b)			**160**		OK

Project Name:	Glynn Archer School	Project Code	
Member Information:	Building B - First Floor 1B4 (2 SPANS)	Date:	

Members Bending stress F_b (psi)		1500	Demand Moment (lbs-ft)			3613.58		
Members Shear stress F_v (psi)		175	Demand Shear (lbs)			3297.56		
Members Perpendicular Bearing Stress		825	Interior Demand Reaction R (lbs)			6595.12		
			End Demand Reaction R (lbs)			1978.54		
Load duration Factor C_D		1	Member Properties:					
Wet Service Factor C_M		1	Exist Width b (in)	6.50	Exist Depth d (in)	7.50		
temperature Factor C_t		1	New Width b (in)	1.5	New Depth d (in)	7.25		
Beam Stability Factor CL		1	Section Modulus (in^3)			60.94		13.14
Size Factor C_F		1.05	Moment of Inertia Strong-Axis (in^4)			228.52		47.63
Flat Use Factor C_{fu}		1.3	Moment of Inertia Weak-Axis (in^4)			171.64		2.04
Incising Factor Ci		0.8	Number of Plies			1		0
Repetitive Member Factor C_r		1.15	Interior Perpemdicular Bearing Width (in)			3.25		
Interior Bearing Arear Factor C_b		1.00	End Perpemdicular Bearing Width (in)			2		
End Bearing Arear Factor C_b		1.19						
Adjusted Allowable Bending Stress (psi)			Demand Bending Stress (psi)					
$F'_b=F_b \times C_D \times C_M \times C_t \times C_L \times C_F \times C_{fu} \times C_i \times C_r$		**1883.7**	fb = M/S			**712**		OK
Adjusted Allowable Shear Stress (psi)			Demand Shear Stress (psi)					
$F'_v=F_v \times C_D \times C_M \times C_t \times C_F \times C_{fu} \times C_i$		**147**	fv=1.5 x (V/bd)			**101**		OK
Adjusted Allowable perpendicular Int. bearing Stress (psi)			Demand Interior Perpendicular Bearing Stress (psi)					
$F'_{perp\text{-}c}=F_{perp\text{-}c} \times C_M \times C_t \times C_i \times C_b$		**660**	fPerp-c= (R/bd_b)			**312**		OK
Adjusted Allowable End perpendicular bearing Stress (psi)			Demand End Perpendicular Bearing Stress (psi)					
$F'_{perp\text{-}c}=F_{perp\text{-}c} \times C_M \times C_t \times C_i \times C_b$		**823**	fPerp-c= (R/bd_b)			**152**		OK

Project Name:	Glynn Archer School	Project Code	
Member Information:	Building A - First Floor 1A5 (3 SPANS)	Date:	

Members Bending stress F_b (psi)		1500
Members Shear stress F_v (psi)		175
Members Perpendicular Bearing Stress		825
Load duration Factor C_D		1
Wet Service Factor C_M		1
temperature Factor C_t		1
Beam Stability Factor CL		1
Size Factor C_F		1.05
Flat Use Factor C_{fu}		1.3
Incising Factor Ci		0.8
Repetitive Member Factor C_r		1.15
Interior Bearing Arear Factor C_b		1.00
End Bearing Arear Factor C_b		1.19
Adjusted Allowable Bending Stress (psi)		
$F'_b=F_b \times C_D \times C_M \times C_t \times C_L \times C_F \times C_{fu} \times C_i \times C_r$		**1883.7**
Adjusted Allowable Shear Stress (psi)		
$F'_v=F_v \times C_D \times C_M \times C_t \times C_F \times C_{fu} \times C_i$		**147**
Adjusted Allowable perpendicular Int. bearing Stress (psi)		
$F'_{perp\text{-}c}=F_{perp\text{-}c} \times C_M \times C_t \times C_i \times C_b$		**660**
Adjusted Allowable End perpendicular bearing Stress (psi)		
$F'_{perp\text{-}c}=F_{perp\text{-}c} \times C_M \times C_t \times C_i \times C_b$		**823**

Demand Moment (lbs-ft)			9028.03		
Demand Shear (lbs)			7936.73		
Interior Demand Reaction R (lbs)			15436.10		
End Demand Reaction R (lbs)			5788.54		
Member Properties:					
Exist Width b (in)	5.50	Exist Depth d (in)	7.50		
New Width b (in)	1.5	New Depth d (in)	7.25		
Section Modulus (in^3)			51.56		13.14
Moment of Inertia Strong-Axis (in^4)			193.36		47.63
Moment of Inertia Weak-Axis (in^4)			103.98		2.04
Number of Plies			1		0
Interior Perpemdicular Bearing Width (in)			3.25		
End Perpemdicular Bearing Width (in)			2		
Demand Bending Stress (psi)					
fb = M/S			**2101**		NO GOOD
Demand Shear Stress (psi)					
fv=1.5 x (V/bd)			**289**		NO GOOD
Demand Interior Perpendicular Bearing Stress (psi)					
fPerp-c= (R/bd_b)			**864**		NO GOOD
Demand End Perpendicular Bearing Stress (psi)					
fPerp-c= (R/bd_b)			**526**		OK

Project Name:	Glynn Archer School	Project Code	
Member Information:	Building B - First Floor 1B6 (2 SPANS)	Date:	

Members Bending stress F_b (psi)		1500	Demand Moment (lbs-ft)		12968.26		
Members Shear stress F_v (psi)		175	Demand Shear (lbs)		10446.85		
Members Perpendicular Bearing Stress		825	Interior Demand Reaction R (lbs)		20893.70		
			End Demand Reaction R (lbs)		6268.11		
Load duration Factor C_D		1	Member Properties:				
Wet Service Factor C_M		1	Exist Width b (in)	5.50	Exist Depth d (in)	7.50	
temperature Factor C_t		1	New Width b (in)	1.5	New Depth d (in)	7.25	
Beam Stability Factor CL		1	Section Modulus (in^3)			51.56	13.14
Size Factor C_F		1.05	Moment of Inertia Strong-Axis (in^4)			193.36	47.63
Flat Use Factor C_{fu}		1.3	Moment of Inertia Weak-Axis (in^4)			103.98	2.04
Incising Factor Ci		0.8	Number of Plies			1	1
Repetitive Member Factor C_r		1.15	Interior Perpemdicular Bearing Width (in)			3.25	
Interior Bearing Arear Factor C_b		1.12	End Perpemdicular Bearing Width (in)			2	
End Bearing Arear Factor C_b		1.19					
Adjusted Allowable Bending Stress (psi)			Demand Bending Stress (psi)				
$F'_b=F_b \times C_D \times C_M \times C_t \times C_L \times C_F \times C_{fu} \times C_i \times C_r$		**1883.7**	fb = M/S			**2405**	NO GOOD
Adjusted Allowable Shear Stress (psi)			Demand Shear Stress (psi)				
$F'_v=F_v \times C_D \times C_M \times C_t \times C_F \times C_{fu} \times C_i$		**147**	fv=1.5 x (V/bd)			**301**	NO GOOD
Adjusted Allowable perpendicular Int. bearing Stress (psi)			Demand Interior Perpendicular Bearing Stress (psi)				
$F'_{perp\text{-}c}=F_{perp\text{-}c} \times C_M \times C_t \times C_i \times C_b$		**736**	fPerp-c= (R/bd_b)			**918**	NO GOOD
Adjusted Allowable End perpendicular bearing Stress (psi)			Demand End Perpendicular Bearing Stress (psi)				
$F'_{perp\text{-}c}=F_{perp\text{-}c} \times C_M \times C_t \times C_i \times C_b$		**823**	fPerp-c= (R/bd_b)			**570**	OK

Project Name:	Glynn Archer School	Project Code	
Member Information:		Date:	

Members Bending stress F_b (psi)		1500
Members Shear stress F_v (psi)		175
Members Perpendicular Bearing Stress		825
Load duration Factor C_D		1
Wet Service Factor C_M		1
temperature Factor C_t		1
Beam Stability Factor CL		1
Size Factor C_F		1
Flat Use Factor C_{fu}		1
Incising Factor Ci		0.8
Repetitive Member Factor C_r		1.15
Interior Bearing Arear Factor C_b		1.12
End Bearing Arear Factor C_b		1.23
Adjusted Allowable Bending Stress (psi)		
$F'_b=F_b \times C_D \times C_M \times C_t \times C_L \times C_F \times C_{fu} \times C_i \times C_r$		**1380**
Adjusted Allowable Shear Stress (psi)		
$F'_v=F_v \times C_D \times C_M \times C_t \times C_F \times C_{fu} \times C_i$		**140**
Adjusted Allowable perpendicular Int. bearing Stress (psi)		
$F'_{perp\text{-}c}=F_{perp\text{-}c} \times C_M \times C_t \times C_i \times C_b$		**736**
Adjusted Allowable End perpendicular bearing Stress (psi)		
$F'_{perp\text{-}c}=F_{perp\text{-}c} \times C_M \times C_t \times C_i \times C_b$		**812**

Demand Moment (lbs-ft)			3613.576		
Demand Shear (lbs)			3297.559		
Interior Demand Reaction R (lbs)					
End Demand Reaction R (lbs)					
Member Properties:					
Exist Width b (in)	6.5	Exist Depth d (in)	7.5		
New Width b (in)	0	New Depth d (in)	0		
Section Modulus (in^3)			60.94		0.00
Moment of Inertia Strong-Axis (in^4)			228.52		0.00
Moment of Inertia Weak-Axis (in^4)			171.64		0.00
Number of Plies			1		0
Interior Perpemdicular Bearing Width (in)			3.25		
End Perpemdicular Bearing Width (in)			1.625		
Demand Bending Stress (psi)					
fb = M/S			**712**		OK
Demand Shear Stress (psi)					
fv=1.5 x (V/bd)			**101**		OK
Demand Interior Perpendicular Bearing Stress (psi)					
fPerp-c= (R/bd_b)			**0**		OK
Demand End Perpendicular Bearing Stress (psi)					
fPerp-c= (R/bd_b)			**0**		OK

Project Name:	Glynn Archer School	Project Code	
Member Information:	Building A - First floor Wood 1x6 Nominal Wood Sheathing	Date:	

Members Bending stress F_b (psi)		1500	Demand Moment (lbs-ft)			25.389		
Members Shear stress F_v (psi)		175	Demand Shear (lbs)			67.8125		
Members Perpendicular Bearing Stress		825	Interior Demand Reaction R (lbs)			135.63		
			End Demand Reaction R (lbs)			48.83		
Load duration Factor C_D		1	Member Properties:					
Wet Service Factor C_M		1	Exist Width b (in)	5.5	Exist Depth d (in)	0.75		
temperature Factor C_t		1	New Width b (in)	0	New Depth d (in)	0		
Beam Stability Factor CL		1	Section Modulus (in^3)			0.52		0.00
Size Factor C_F		1	Moment of Inertia Strong-Axis (in^4)			0.19		0.00
Flat Use Factor C_{fu}		1	Moment of Inertia Weak-Axis (in^4)			10.40		0.00
Incising Factor Ci		0.8	Number of Plies			1		0
Repetitive Member Factor C_r		1.15	Interior Perpemdicular Bearing Width (in)			1.625		
Interior Bearing Arear Factor C_b		1.23	End Perpemdicular Bearing Width (in)			1.625		
End Bearing Arear Factor C_b		1.23						
Adjusted Allowable Bending Stress (psi)			Demand Bending Stress (psi)					
$F'_b=F_b \times C_D \times C_M \times C_t \times C_L \times C_F \times C_{fu} \times C_i \times C_r$		**1380**	fb = M/S			**591**		OK
Adjusted Allowable Shear Stress (psi)			Demand Shear Stress (psi)					
$F'_v=F_v \times C_D \times C_M \times C_t \times C_F \times C_{fu} \times C_i$		**140**	fv=1.5 x (V/bd)			**25**		OK
Adjusted Allowable perpendicular Int. bearing Stress (psi)			Demand Interior Perpendicular Bearing Stress (psi)					
$F'_{perp\text{-}c}=F_{perp\text{-}c} \times C_M \times C_t \times C_i \times C_b$		**812**	fPerp-c= (R/bd_b)			**15**		OK
Adjusted Allowable End perpendicular bearing Stress (psi)			Demand End Perpendicular Bearing Stress (psi)					
$F'_{perp\text{-}c}=F_{perp\text{-}c} \times C_M \times C_t \times C_i \times C_b$		**812**	fPerp-c= (R/bd_b)			**5**		OK

Project Name:	Glynn Archer School	Project Code	
Member Information:		Date:	

Members Bending stress F_b (psi)		1500
Members Shear stress F_v (psi)		175
Members Perpendicular Bearing Stress		825
Load duration Factor C_D		1
Wet Service Factor C_M		1
temperature Factor C_t		1
Beam Stability Factor CL		1
Size Factor C_F		1
Flat Use Factor C_{fu}		1
Incising Factor Ci		0.8
Repetitive Member Factor C_r		1.15
Interior Bearing Arear Factor C_b		1.12
End Bearing Arear Factor C_b		1.23
Adjusted Allowable Bending Stress (psi)		
$F'_b=F_b \times C_D \times C_M \times C_t \times C_L \times C_F \times C_{fu} \times C_i \times C_r$		**1380**
Adjusted Allowable Shear Stress (psi)		
$F'_v=F_v \times C_D \times C_M \times C_t \times C_F \times C_{fu} \times C_i$		**140**
Adjusted Allowable perpendicular Int. bearing Stress (psi)		
$F'_{perp\text{-}c}=F_{perp\text{-}c} \times C_M \times C_t \times C_i \times C_b$		**736**
Adjusted Allowable End perpendicular bearing Stress (psi)		
$F'_{perp\text{-}c}=F_{perp\text{-}c} \times C_M \times C_t \times C_i \times C_b$		**812**

Demand Moment (lbs-ft)			-57.5359		
Demand Shear (lbs)			-153.675		
Interior Demand Reaction R (lbs)			-307.35		
End Demand Reaction R (lbs)			-110.65		
Member Properties:					
Exist Width b (in)	5.5	Exist Depth d (in)	0.75		
New Width b (in)	0	New Depth d (in)	0		
Section Modulus (in^3)			0.52		0.00
Moment of Inertia Strong-Axis (in^4)			0.19		0.00
Moment of Inertia Weak-Axis (in^4)			10.40		0.00
Number of Plies			1		0
Interior Perpemdicular Bearing Width (in)			3.25		
End Perpemdicular Bearing Width (in)			1.625		
Demand Bending Stress (psi)					
fb = M/S			**-1339**		OK
Demand Shear Stress (psi)					
fv=1.5 x (V/bd)			**-56**		OK
Demand Interior Perpendicular Bearing Stress (psi)					
fPerp-c= (R/bd_b)			**-17**		OK
Demand End Perpendicular Bearing Stress (psi)					
fPerp-c= (R/bd_b)			**-12**		OK

Project Name:	Glynn Archer School	Project Code	
Member Information:		Date:	

Members Bending stress F_b (psi)		1500
Members Shear stress F_v (psi)		175
Members Perpendicular Bearing Stress		825
Load duration Factor C_D		1
Wet Service Factor C_M		1
temperature Factor C_t		1
Beam Stability Factor CL		1
Size Factor C_F		1
Flat Use Factor C_{fu}		1
Incising Factor Ci		0.8
Repetitive Member Factor C_r		1.15
Interior Bearing Arear Factor C_b		1.12
End Bearing Arear Factor C_b		1.23
Adjusted Allowable Bending Stress (psi)		
$F'_b=F_b \times C_D \times C_M \times C_t \times C_L \times C_F \times C_{fu} \times C_i \times C_r$		**1380**
Adjusted Allowable Shear Stress (psi)		
$F'_v=F_v \times C_D \times C_M \times C_t \times C_F \times C_{fu} \times C_i$		**140**
Adjusted Allowable perpendicular Int. bearing Stress (psi)		
$F'_{perp\text{-}c}=F_{perp\text{-}c} \times C_M \times C_t \times C_i \times C_b$		**736**
Adjusted Allowable End perpendicular bearing Stress (psi)		
$F'_{perp\text{-}c}=F_{perp\text{-}c} \times C_M \times C_t \times C_i \times C_b$		**812**

Demand Moment (lbs-ft)			#REF!		
Demand Shear (lbs)			#REF!		
Interior Demand Reaction R (lbs)					
End Demand Reaction R (lbs)					
Member Properties:					
Exist Width b (in)	#REF!	Exist Depth d (in)	#REF!		
New Width b (in)	0	New Depth d (in)	0		
Section Modulus (in^3)			#REF!		0.00
Moment of Inertia Strong-Axis (in^4)			#REF!		0.00
Moment of Inertia Weak-Axis (in^4)			#REF!		0.00
Number of Plies			1		0
Interior Perpemdicular Bearing Width (in)			3.25		
End Perpemdicular Bearing Width (in)			1.625		
Demand Bending Stress (psi)					
fb = M/S			**#REF!**		#REF!
Demand Shear Stress (psi)					
fv=1.5 x (V/bd)			**#REF!**		#REF!
Demand Interior Perpendicular Bearing Stress (psi)					
fPerp-c= (R/bd_b)			**#REF!**		#REF!
Demand End Perpendicular Bearing Stress (psi)					
fPerp-c= (R/bd_b)			**#REF!**		#REF!

Project Name:	Glynn Archer School	Project Code	
Member Information:		Date:	

Members Bending stress F_b (psi)		1500
Members Shear stress F_v (psi)		175
Members Perpendicular Bearing Stress		825
Load duration Factor C_D		1
Wet Service Factor C_M		1
temperature Factor C_t		1
Beam Stability Factor CL		1
Size Factor C_F		1
Flat Use Factor C_{fu}		1
Incising Factor Ci		0.8
Repetitive Member Factor C_r		1.15
Interior Bearing Arear Factor C_b		1.12
End Bearing Arear Factor C_b		1.23
Adjusted Allowable Bending Stress (psi)		
$F'_b=F_b \times C_D \times C_M \times C_t \times C_L \times C_F \times C_{fu} \times C_i \times C_r$		**1380**
Adjusted Allowable Shear Stress (psi)		
$F'_v=F_v \times C_D \times C_M \times C_t \times C_F \times C_{fu} \times C_i$		**140**
Adjusted Allowable perpendicular Int. bearing Stress (psi)		
$F'_{perp\text{-}c}=F_{perp\text{-}c} \times C_M \times C_t \times C_i \times C_b$		**736**
Adjusted Allowable End perpendicular bearing Stress (psi)		
$F'_{perp\text{-}c}=F_{perp\text{-}c} \times C_M \times C_t \times C_i \times C_b$		**812**

Demand Moment (lbs-ft)			#REF!		
Demand Shear (lbs)			#REF!		
Interior Demand Reaction R (lbs)					
End Demand Reaction R (lbs)					
Member Properties:					
Exist Width b (in)	#REF!	Exist Depth d (in)	#REF!		
New Width b (in)	0	New Depth d (in)	0		
Section Modulus (in^3)			#REF!		0.00
Moment of Inertia Strong-Axis (in^4)			#REF!		0.00
Moment of Inertia Weak-Axis (in^4)			#REF!		0.00
Number of Plies			1		0
Interior Perpemdicular Bearing Width (in)			3.25		
End Perpemdicular Bearing Width (in)			1.625		
Demand Bending Stress (psi)					
fb = M/S			**#REF!**		#REF!
Demand Shear Stress (psi)					
fv=1.5 x (V/bd)			**#REF!**		#REF!
Demand Interior Perpendicular Bearing Stress (psi)					
fPerp-c= (R/bd_b)			**#REF!**		#REF!
Demand End Perpendicular Bearing Stress (psi)					
fPerp-c= (R/bd_b)			**#REF!**		#REF!

Project Name:	Glynn Archer School	Project Code	
Member Information:	Building A - First Floor 1A5 (3 SPANS)	Date:	

Members Bending stress F_b (psi)		1500
Members Shear stress F_v (psi)		175
Members Perpendicular Bearing Stress		825
Load duration Factor C_D		1
Wet Service Factor C_M		1
temperature Factor C_t		1
Beam Stability Factor CL		1
Size Factor C_F		1.05
Flat Use Factor C_{fu}		1.3
Incising Factor Ci		0.8
Repetitive Member Factor C_r		1.15
Interior Bearing Arear Factor C_b		1.00
End Bearing Arear Factor C_b		1.19
Adjusted Allowable Bending Stress (psi)		
$F'_b=F_b \times C_D \times C_M \times C_t \times C_L \times C_F \times C_{fu} \times C_i \times C_r$		**1883.7**
Adjusted Allowable Shear Stress (psi)		
$F'_v=F_v \times C_D \times C_M \times C_t \times C_F \times C_{fu} \times C_i$		**147**
Adjusted Allowable perpendicular Int. bearing Stress (psi)		
$F'_{perp\text{-}c}=F_{perp\text{-}c} \times C_M \times C_t \times C_i \times C_b$		**660**
Adjusted Allowable End perpendicular bearing Stress (psi)		
$F'_{perp\text{-}c}=F_{perp\text{-}c} \times C_M \times C_t \times C_i \times C_b$		**823**

Demand Moment (lbs-ft)			10454.17		
Demand Shear (lbs)			7597.15		
Interior Demand Reaction R (lbs)			14775.67		
End Demand Reaction R (lbs)			5540.87		
Member Properties:					
Exist Width b (in)	5.75	Exist Depth d (in)	5.63		
New Width b (in)	1.5	New Depth d (in)	7.25		
Section Modulus (in^3)			30.32		13.14
Moment of Inertia Strong-Axis (in^4)			85.28		47.63
Moment of Inertia Weak-Axis (in^4)			89.11		2.04
Number of Plies			1		5
Interior Perpemdicular Bearing Width (in)			3.25		
End Perpemdicular Bearing Width (in)			2		
Demand Bending Stress (psi)					
fb = M/S			**1306**		OK
Demand Shear Stress (psi)					
fv=1.5 x (V/bd)			**131**		OK
Demand Interior Perpendicular Bearing Stress (psi)					
fPerp-c= (R/bd_b)			**343**		OK
Demand End Perpendicular Bearing Stress (psi)					
fPerp-c= (R/bd_b)			**482**		OK

Project Name:	Glynn Archer School	Project Code	
Member Information:	Building B - First Floor 1B6 (2 SPANS)	Date:	

Members Bending stress F_b (psi)		1500
Members Shear stress F_v (psi)		175
Members Perpendicular Bearing Stress		825
Load duration Factor C_D		1
Wet Service Factor C_M		1
temperature Factor C_t		1
Beam Stability Factor CL		1
Size Factor C_F		1.05
Flat Use Factor C_{fu}		1.3
Incising Factor Ci		0.8
Repetitive Member Factor C_r		1.15
Interior Bearing Arear Factor C_b		1.12
End Bearing Arear Factor C_b		1.19
Adjusted Allowable Bending Stress (psi)		
$F'_b=F_b \times C_D \times C_M \times C_t \times C_L \times C_F \times C_{fu} \times C_i \times C_r$		**1883.7**
Adjusted Allowable Shear Stress (psi)		
$F'_v=F_v \times C_D \times C_M \times C_t \times C_F \times C_{fu} \times C_i$		**147**
Adjusted Allowable perpendicular Int. bearing Stress (psi)		
$F'_{perp\text{-}c}=F_{perp\text{-}c} \times C_M \times C_t \times C_i \times C_b$		**736**
Adjusted Allowable End perpendicular bearing Stress (psi)		
$F'_{perp\text{-}c}=F_{perp\text{-}c} \times C_M \times C_t \times C_i \times C_b$		**823**

Demand Moment (lbs-ft)			9322.07		
Demand Shear (lbs)			5443.54		
Interior Demand Reaction R (lbs)			10887.08		
End Demand Reaction R (lbs)			3266.13		
Member Properties:					
Exist Width b (in)	5.75	Exist Depth d (in)	5.63		
New Width b (in)	5.5	New Depth d (in)	5.5		
Section Modulus (in^3)			30.32		27.73
Moment of Inertia Strong-Axis (in^4)			85.28		76.26
Moment of Inertia Weak-Axis (in^4)			89.11		76.26
Number of Plies			1		2
Interior Perpemdicular Bearing Width (in)			3.25		
End Perpemdicular Bearing Width (in)			2		
Demand Bending Stress (psi)					
fb = M/S			**1304**		OK
Demand Shear Stress (psi)					
fv=1.5 x (V/bd)			**88**		OK
Demand Interior Perpendicular Bearing Stress (psi)					
fPerp-c= (R/bd_b)			**200**		OK
Demand End Perpendicular Bearing Stress (psi)					
fPerp-c= (R/bd_b)			**284**		OK

Project Name:	Glynn Archer School	Project Code	
Member Information:	Building B - First Floor 1B6 (2 SPANS)	Date:	

Members Bending stress F_b (psi)		1500
Members Shear stress F_v (psi)		175
Members Perpendicular Bearing Stress		825
Load duration Factor C_D		1
Wet Service Factor C_M		1
temperature Factor C_t		1
Beam Stability Factor CL		1
Size Factor C_F		1.05
Flat Use Factor C_{fu}		1.3
Incising Factor Ci		0.8
Repetitive Member Factor C_r		1.15
Interior Bearing Arear Factor C_b		1.12
End Bearing Arear Factor C_b		1.19
Adjusted Allowable Bending Stress (psi)		
$F'_b=F_b \times C_D \times C_M \times C_t \times C_L \times C_F \times C_{fu} \times C_i \times C_r$		**1883.7**
Adjusted Allowable Shear Stress (psi)		
$F'_v=F_v \times C_D \times C_M \times C_t \times C_F \times C_{fu} \times C_i$		**147**
Adjusted Allowable perpendicular Int. bearing Stress (psi)		
$F'_{perp\text{-}c}=F_{perp\text{-}c} \times C_M \times C_t \times C_i \times C_b$		**736**
Adjusted Allowable End perpendicular bearing Stress (psi)		
$F'_{perp\text{-}c}=F_{perp\text{-}c} \times C_M \times C_t \times C_i \times C_b$		**823**

Demand Moment (lbs-ft)			10402.01		
Demand Shear (lbs)			3852.59		
Interior Demand Reaction R (lbs)			7705.19		
End Demand Reaction R (lbs)			2311.56		
Member Properties:					
Exist Width b (in)	5.75	Exist Depth d (in)	5.63		
New Width b (in)	1.5	New Depth d (in)	7.25		
Section Modulus (in^3)			30.32		13.14
Moment of Inertia Strong-Axis (in^4)			85.28		47.63
Moment of Inertia Weak-Axis (in^4)			89.11		2.04
Number of Plies			1		3
Interior Perpemdicular Bearing Width (in)			3.25		
End Perpemdicular Bearing Width (in)			2		
Demand Bending Stress (psi)					
fb = M/S			**1790**		OK
Demand Shear Stress (psi)					
fv=1.5 x (V/bd)			**89**		OK
Demand Interior Perpendicular Bearing Stress (psi)					
fPerp-c= (R/bd_b)			**231**		OK
Demand End Perpendicular Bearing Stress (psi)					
fPerp-c= (R/bd_b)			**201**		OK

Building A - First Floor Framing Plan

Beam #	Span (ft)	Beam Length		Width	Depth	trb_w	Live Load (psf)		Adjusted Live	Dead Load (psf)		Adjusted Dead	Total Load	Max Shear	Max Moment
		Feet	Inches				Partition Wall		Load (plf)			Load (plf)	(plf)	(lb)	(lbs-ft)
1A1	6.05	6.00	0.56	5.50	7.50	7.19		100.00	718.75		8.50	61.09	779.84	2909.54	2879.99
1A2	6.92	6.00	11.00	5.50	7.50	7.19		100.00	718.75		8.50	61.09	779.84	3371.20	4663.49
1A3	6.05	6.00	0.56	5.50	7.50	9.90		185.00	1831.69		44.00	435.64	2267.33	8459.23	8373.32
1A4	5.21	5.00	2.50	5.50	7.50	9.90		185.00	1831.69		44.00	435.64	2267.33	7380.63	7688.15
1A5	7.50	7.00	6.00	5.50	7.50	10.70		100.00	1069.79		8.50	90.93	1160.72	5440.90	8161.34
1A6	5.48	5.00	5.75	6.50	7.50	8.88		100.00	887.50		8.50	75.44	962.94	3297.56	3613.58
1A7	5.69	5.00	8.25	5.50	7.50	9.75		185.00	1803.75		44.00	429.00	2232.75	7936.73	9028.03
1A8	7.58	7.00	7.00	5.50	7.50	9.75		185.00	1803.75		44.00	429.00	2232.75	10446.85	12968.26
1A-1X6	2.00	2.00	0.00	5.50	0.75	0.50		100.00	50.00		8.50	4.25	54.25	67.81	25.39
1ARf-1X6	2.00	2.00	0.00	5.50	0.75	0.50		-254.38	-127.19		8.50	4.25	-122.94	-153.68	-57.54

Building B - First Floor Framing Plan

Beam #	Span (ft)	Beam Length		Width	Depth	trb_w	Live Load (psf)		Adjusted Live	Dead Load (psf)		Adjusted Dead	Total Load	Max Shear	Max Moment
		Feet	Inches				Partition Wall		Load (plf)			Load (plf)	(p1f)	(lb)	(lbs-ft)
1B1	11.96	11.00	11.50	6.50	7.50	5.69		100.00	568.75		8.50	48.34	617.09	3689.71	11030.68
1B2	7.66	7.00	7.88	3.25	7.50	11.65		100.00	1165.10		8.50	99.03	1264.13	5971.65	7484.22
1B3	7.66	7.00	7.88	6.50	7.50	11.72		185.00	2167.97		44.00	515.63	2683.59	12677.05	15888.04
1B4	5.48	5.00	5.75	6.50	7.50	8.88		100.00	887.50		8.50	75.44	962.94	3297.56	3613.58
1B5	7.50	7.00	6.00	3.25	7.50	10.70		100.00	1069.79		8.50	90.93	1160.72	5440.90	8161.34
1B6	5.23	5.00	2.75	3.25	7.50	11.65		100.00	1165.10		8.50	99.03	1264.13	4131.48	4320.84
1B7	6.27	6.00	3.25	6.50	7.50	11.72		185.00	2167.97		44.00	515.63	2683.59	10383.10	10658.32
1B8	5.44	5.00	5.25	5.50	7.50	8.88		100.00	887.50		8.50	75.44	962.94	3272.48	3558.83
1B9	10.88	10.00	10.50	5.50	7.50	8.88		100.00	887.50		8.50	75.44	962.94	5235.97	14235.30
1B10	5.25	5.00	3.00	5.50	7.50	8.88		185.00	1641.88		44.00	390.50	2032.38	6668.73	7002.17
1B11	7.58	7.00	7.00	3.25	7.50	6.00		100.00	600.00		8.50	51.00	651.00	3085.47	4679.63
1B12	5.69	5.00	8.25	3.25	7.50	9.75		185.00	1803.75		44.00	429.00	2232.75	7835.14	7294.65
1B-1X6	2.00	2.00	0.00	5.50	0.75	0.50		100.00	50.00		8.50	4.25	54.25	67.81	25.39

Auditorium - First Floor Framing Plan

Beam #	Span (ft)	Beam Length		Width	Depth	trb_w	Live Load (psf)		Adjusted Live	Dead Load (psf)		Adjusted Dead	Total Load	Max Shear	Max Moment
		Feet	Inches				Partition Wall		Load (plf)			Load (plf)	(plf)	(lb)	(lbs-ft)
1C1	8.41	8.00	4.88	5.75	5.63	13.50		100.00	1350.00		8.50	114.75	1464.75	7597.15	10454.17
1C2	8.56	8.00	6.75	5.75	5.63	9.38		100.00	937.50		8.50	79.69	1017.19	5443.54	9322.07
1C3	13.50	13.00	6.00	5.75	5.63	4.21		100.00	420.83		8.50	35.77	456.60	3852.59	10402.01

No. Spans
3
2
3
2
2
2
2
3
2

No. Spans
1
3
3
2
2
2
3
2
1
2
2
3

No. Spans
3
2
2

Project Name:	Glynn Archer School	Project Code	
Member Information:	Building B - First Floor 1B1 (SINGLE SPAN)	Date:	

Members Bending stress F_b (psi)		1500	Demand Moment (lbs-ft)			11030.68		
Members Shear stress F_v (psi)		175	Demand Shear (lbs)			3689.71		
Members Perpendicular Bearing Stress		825	Interior Demand Reaction R (lbs)			3689.71		
			End Demand Reaction R (lbs)			3689.71		
Load duration Factor C_D		1	Member Properties:					
Wet Service Factor C_M		1	Exist Width b (in)	6.5	Exist Depth d (in)	7.5		
temperature Factor C_t		1	New Width b (in)	1.5	New Depth d (in)	7.25		
Beam Stability Factor CL		1	Section Modulus (in^3)			60.94		13.14
Size Factor C_F		1.05	Moment of Inertia Strong-Axis (in^4)			228.52		47.63
Flat Use Factor C_{fu}		1.3	Moment of Inertia Weak-Axis (in^4)			171.64		2.04
Incising Factor Ci		0.8	Number of Plies			1		1
Repetitive Member Factor C_r		1.15	Interior Perpemdicular Bearing Width (in)			3.25		
Interior Bearing Arear Factor C_b		1.00	End Perpemdicular Bearing Width (in)			2		
End Bearing Arear Factor C_b		1.19						
Adjusted Allowable Bending Stress (psi)			Demand Bending Stress (psi)					
$F'_b=F_b \times C_D \times C_M \times C_t \times C_L \times C_F \times C_{fu} \times C_i \times C_r$		**1883.7**	fb = M/S			**1787**		OK
Adjusted Allowable Shear Stress (psi)			Demand Shear Stress (psi)					
$F'_v=F_v \times C_D \times C_M \times C_t \times C_F \times C_{fu} \times C_i$		**147**	fv=1.5 x (V/bd)			**93**		OK
Adjusted Allowable perpendicular Int. bearing Stress (psi)			Demand Interior Perpendicular Bearing Stress (psi)					
$F'_{perp\text{-}c}=F_{perp\text{-}c} \times C_M \times C_t \times C_i \times C_b$		**660**	fPerp-c= (R/bd_b)			**175**		OK
Adjusted Allowable End perpendicular bearing Stress (psi)			Demand End Perpendicular Bearing Stress (psi)					
$F'_{perp\text{-}c}=F_{perp\text{-}c} \times C_M \times C_t \times C_i \times C_b$		**823**	fPerp-c= (R/bd_b)			**284**		OK

Project Name:	Glynn Archer School	Project Code	
Member Information:	Building A - First Floor 1A5 (3 SPANS)	Date:	

Members Bending stress F_b (psi)		1500
Members Shear stress F_v (psi)		175
Members Perpendicular Bearing Stress		825
Load duration Factor C_D		1
Wet Service Factor C_M		1
temperature Factor C_t		1
Beam Stability Factor CL		1
Size Factor C_F		1.05
Flat Use Factor C_{fu}		1.3
Incising Factor Ci		0.8
Repetitive Member Factor C_r		1.15
Interior Bearing Arear Factor C_b		1.00
End Bearing Arear Factor C_b		1.19
Adjusted Allowable Bending Stress (psi)		
$F'_b=F_b \times C_D \times C_M \times C_t \times C_L \times C_F \times C_{fu} \times C_i \times C_r$		**1883.7**
Adjusted Allowable Shear Stress (psi)		
$F'_v=F_v \times C_D \times C_M \times C_t \times C_F \times C_{fu} \times C_i$		**147**
Adjusted Allowable perpendicular Int. bearing Stress (psi)		
$F'_{perp\text{-}c}=F_{perp\text{-}c} \times C_M \times C_t \times C_i \times C_b$		**660**
Adjusted Allowable End perpendicular bearing Stress (psi)		
$F'_{perp\text{-}c}=F_{perp\text{-}c} \times C_M \times C_t \times C_i \times C_b$		**825**

Demand Moment (lbs-ft)			7484.22		
Demand Shear (lbs)			5971.65		
Interior Demand Reaction R (lbs)			11614.23		
End Demand Reaction R (lbs)			4355.33		
Member Properties:					
Exist Width b (in)	3.25	Exist Depth d (in)	7.50		
New Width b (in)	1.5	New Depth d (in)	7.25		
Section Modulus (in^3)			30.47		13.14
Moment of Inertia Strong-Axis (in^4)			114.26		47.63
Moment of Inertia Weak-Axis (in^4)			21.46		2.04
Number of Plies			1		4
Interior Perpemdicular Bearing Width (in)			12		
End Perpemdicular Bearing Width (in)			6		
Demand Bending Stress (psi)					
fb = M/S			**1082**		OK
Demand Shear Stress (psi)					
fv=1.5 x (V/bd)			**132**		OK
Demand Interior Perpendicular Bearing Stress (psi)					
fPerp-c= (R/bd_b)			**105**		OK
Demand End Perpendicular Bearing Stress (psi)					
fPerp-c= (R/bd_b)			**223**		OK

Project Name:	Glynn Archer School	Project Code	
Member Information:	Building A - First Floor 1A5 (3 SPANS)	Date:	

Members Bending stress F_b (psi)		1500
Members Shear stress F_v (psi)		175
Members Perpendicular Bearing Stress		825
Load duration Factor C_D		1
Wet Service Factor C_M		1
temperature Factor C_t		1
Beam Stability Factor CL		1
Size Factor C_F		1.05
Flat Use Factor C_{fu}		1.3
Incising Factor Ci		0.8
Repetitive Member Factor C_r		1.15
Interior Bearing Arear Factor C_b		1.00
End Bearing Arear Factor C_b		1.19
Adjusted Allowable Bending Stress (psi)		
$F'_b=F_b \times C_D \times C_M \times C_t \times C_L \times C_F \times C_{fu} \times C_i \times C_r$		**1883.7**
Adjusted Allowable Shear Stress (psi)		
$F'_v=F_v \times C_D \times C_M \times C_t \times C_F \times C_{fu} \times C_i$		**147**
Adjusted Allowable perpendicular Int. bearing Stress (psi)		
$F'_{perp\text{-}c}=F_{perp\text{-}c} \times C_M \times C_t \times C_i \times C_b$		**660**
Adjusted Allowable End perpendicular bearing Stress (psi)		
$F'_{perp\text{-}c}=F_{perp\text{-}c} \times C_M \times C_t \times C_i \times C_b$		**823**

Demand Moment (lbs-ft)			15888.04		
Demand Shear (lbs)			12677.05		
Interior Demand Reaction R (lbs)			24655.52		
End Demand Reaction R (lbs)			9245.82		
Member Properties:					
Exist Width b (in)	6.50	Exist Depth d (in)	7.50		
New Width b (in)	1.5	New Depth d (in)	7.25		
Section Modulus (in^3)			60.94		13.14
Moment of Inertia Strong-Axis (in^4)			228.52		47.63
Moment of Inertia Weak-Axis (in^4)			171.64		2.04
Number of Plies			1		8
Interior Perpemdicular Bearing Width (in)			3.25		
End Perpemdicular Bearing Width (in)			2		
Demand Bending Stress (psi)					
fb = M/S			**1148**		OK
Demand Shear Stress (psi)					
fv=1.5 x (V/bd)			**140**		OK
Demand Interior Perpendicular Bearing Stress (psi)					
fPerp-c= (R/bd_b)			**410**		OK
Demand End Perpendicular Bearing Stress (psi)					
fPerp-c= (R/bd_b)			**711**		OK

Project Name:	Glynn Archer School	Project Code	
Member Information:	Building B - First Floor 1B4 (2 SPANS)	Date:	

Members Bending stress F_b (psi)		1500
Members Shear stress F_v (psi)		175
Members Perpendicular Bearing Stress		825
Load duration Factor C_D		1
Wet Service Factor C_M		1
temperature Factor C_t		1
Beam Stability Factor CL		1
Size Factor C_F		1.05
Flat Use Factor C_{fu}		1.3
Incising Factor Ci		0.8
Repetitive Member Factor C_r		1.15
Interior Bearing Arear Factor C_b		1.00
End Bearing Arear Factor C_b		1.19
Adjusted Allowable Bending Stress (psi)		
$F'_b=F_b \times C_D \times C_M \times C_t \times C_L \times C_F \times C_{fu} \times C_i \times C_r$		**1883.7**
Adjusted Allowable Shear Stress (psi)		
$F'_v=F_v \times C_D \times C_M \times C_t \times C_F \times C_{fu} \times C_i$		**147**
Adjusted Allowable perpendicular Int. bearing Stress (psi)		
$F'_{perp\text{-}c}=F_{perp\text{-}c} \times C_M \times C_t \times C_i \times C_b$		**660**
Adjusted Allowable End perpendicular bearing Stress (psi)		
$F'_{perp\text{-}c}=F_{perp\text{-}c} \times C_M \times C_t \times C_i \times C_b$		**823**

Demand Moment (lbs-ft)			3613.58		
Demand Shear (lbs)			3297.56		
Interior Demand Reaction R (lbs)			6595.12		
End Demand Reaction R (lbs)			1978.54		
Member Properties:					
Exist Width b (in)	6.5	Exist Depth d (in)	7.5		
New Width b (in)	1.5	New Depth d (in)	7.25		
Section Modulus (in^3)			60.94		13.14
Moment of Inertia Strong-Axis (in^4)			228.52		47.63
Moment of Inertia Weak-Axis (in^4)			171.64		2.04
Number of Plies			1		0
Interior Perpemdicular Bearing Width (in)			3.25		
End Perpemdicular Bearing Width (in)			2		
Demand Bending Stress (psi)					
fb = M/S			**712**		OK
Demand Shear Stress (psi)					
fv=1.5 x (V/bd)			**101**		OK
Demand Interior Perpendicular Bearing Stress (psi)					
fPerp-c= (R/bd_b)			**312**		OK
Demand End Perpendicular Bearing Stress (psi)					
fPerp-c= (R/bd_b)			**152**		OK

Project Name:	Glynn Archer School	Project Code	
Member Information:	Building B - First Floor 1B5 (2 SPANS)	Date:	

Members Bending stress F_b (psi)		1500	Demand Moment (lbs-ft)		8161.34		
Members Shear stress F_v (psi)		175	Demand Shear (lbs)		5440.90		
Members Perpendicular Bearing Stress		825	Interior Demand Reaction R (lbs)		10881.79		
			End Demand Reaction R (lbs)		3264.54		
Load duration Factor C_D		1	Member Properties:				
Wet Service Factor C_M		1	Exist Width b (in)	3.25	Exist Depth d (in)	7.5	
temperature Factor C_t		1	New Width b (in)	1.5	New Depth d (in)	7.25	
Beam Stability Factor CL		1	Section Modulus (in^3)			30.47	13.14
Size Factor C_F		1	Moment of Inertia Strong-Axis (in^4)			114.26	47.63
Flat Use Factor C_{fu}		1	Moment of Inertia Weak-Axis (in^4)			21.46	2.04
Incising Factor Ci		0.8	Number of Plies			1	4
Repetitive Member Factor C_r		1.15	Interior Perpemdicular Bearing Width (in)			3.25	
Interior Bearing Arear Factor C_b		1.12	End Perpemdicular Bearing Width (in)			2	
End Bearing Arear Factor C_b		1.19					
Adjusted Allowable Bending Stress (psi)			Demand Bending Stress (psi)				
$F'_b=F_b \times C_D \times C_M \times C_t \times C_L \times C_F \times C_{fu} \times C_i \times C_r$		**1380**	fb = M/S			**1180**	OK
Adjusted Allowable Shear Stress (psi)			Demand Shear Stress (psi)				
$F'_v=F_v \times C_D \times C_M \times C_t \times C_F \times C_{fu} \times C_i$		**140**	fv=1.5 x (V/bd)			**120**	OK
Adjusted Allowable perpendicular Int. bearing Stress (psi)			Demand Interior Perpendicular Bearing Stress (psi)				
$F'_{perp\text{-}c}=F_{perp\text{-}c} \times C_M \times C_t \times C_i \times C_b$		**736**	fPerp-c= (R/bd_b)			**362**	OK
Adjusted Allowable End perpendicular bearing Stress (psi)			Demand End Perpendicular Bearing Stress (psi)				
$F'_{perp\text{-}c}=F_{perp\text{-}c} \times C_M \times C_t \times C_i \times C_b$		**784**	fPerp-c= (R/bd_b)			**502**	OK

Project Name:	Glynn Archer School	Project Code	
Member Information:	Building B - First Floor 1B6 (2 SPANS)	Date:	

Members Bending stress F_b (psi)		1500
Members Shear stress F_v (psi)		175
Members Perpendicular Bearing Stress		825
Load duration Factor C_D		1
Wet Service Factor C_M		1
temperature Factor C_t		1
Beam Stability Factor CL		1
Size Factor C_F		1.05
Flat Use Factor C_{fu}		1.3
Incising Factor Ci		0.8
Repetitive Member Factor C_r		1.15
Interior Bearing Arear Factor C_b		1.12
End Bearing Arear Factor C_b		1.19
Adjusted Allowable Bending Stress (psi)		
$F'_b=F_b \times C_D \times C_M \times C_t \times C_L \times C_F \times C_{fu} \times C_i \times C_r$		**1883.7**
Adjusted Allowable Shear Stress (psi)		
$F'_v=F_v \times C_D \times C_M \times C_t \times C_F \times C_{fu} \times C_i$		**147**
Adjusted Allowable perpendicular Int. bearing Stress (psi)		
$F'_{perp\text{-}c}=F_{perp\text{-}c} \times C_M \times C_t \times C_i \times C_b$		**736**
Adjusted Allowable End perpendicular bearing Stress (psi)		
$F'_{perp\text{-}c}=F_{perp\text{-}c} \times C_M \times C_t \times C_i \times C_b$		**823**

Demand Moment (lbs-ft)			4320.84		
Demand Shear (lbs)			4131.48		
Interior Demand Reaction R (lbs)			8262.96		
End Demand Reaction R (lbs)			2478.89		
Member Properties:					
Exist Width b (in)	3.25	Exist Depth d (in)	7.5		
New Width b (in)	1.5	New Depth d (in)	7.25		
Section Modulus (in^3)			30.47		13.14
Moment of Inertia Strong-Axis (in^4)			114.26		47.63
Moment of Inertia Weak-Axis (in^4)			21.46		2.04
Number of Plies			1		2
Interior Perpemdicular Bearing Width (in)			3.25		
End Perpemdicular Bearing Width (in)			2		
Demand Bending Stress (psi)					
fb = M/S			**914**		OK
Demand Shear Stress (psi)					
fv=1.5 x (V/bd)			**134**		OK
Demand Interior Perpendicular Bearing Stress (psi)					
fPerp-c= (R/bd_b)			**407**		OK
Demand End Perpendicular Bearing Stress (psi)					
fPerp-c= (R/bd_b)			**381**		OK

Project Name:	Glynn Archer School	Project Code	
Member Information:	Building A - First Floor 1A5 (3 SPANS)	Date:	

Members Bending stress F_b (psi)		1500
Members Shear stress F_v (psi)		175
Members Perpendicular Bearing Stress		825
Load duration Factor C_D		1
Wet Service Factor C_M		1
temperature Factor C_t		1
Beam Stability Factor CL		1
Size Factor C_F		1.05
Flat Use Factor C_{fu}		1.3
Incising Factor Ci		0.8
Repetitive Member Factor C_r		1.15
Interior Bearing Arear Factor C_b		1.00
End Bearing Arear Factor C_b		1.19
Adjusted Allowable Bending Stress (psi)		
$F'_b=F_b \times C_D \times C_M \times C_t \times C_L \times C_F \times C_{fu} \times C_i \times C_r$		**1883.7**
Adjusted Allowable Shear Stress (psi)		
$F'_v=F_v \times C_D \times C_M \times C_t \times C_F \times C_{fu} \times C_i$		**147**
Adjusted Allowable perpendicular Int. bearing Stress (psi)		
$F'_{perp\text{-}c}=F_{perp\text{-}c} \times C_M \times C_t \times C_i \times C_b$		**660**
Adjusted Allowable End perpendicular bearing Stress (psi)		
$F'_{perp\text{-}c}=F_{perp\text{-}c} \times C_M \times C_t \times C_i \times C_b$		**823**

Demand Moment (lbs-ft)			10658.32		
Demand Shear (lbs)			10383.10		
Interior Demand Reaction R (lbs)			20194.04		
End Demand Reaction R (lbs)			7572.77		
Member Properties:					
Exist Width b (in)	6.50	Exist Depth d (in)	7.50		
New Width b (in)	1.5	New Depth d (in)	7.25		
Section Modulus (in^3)			60.94		13.14
Moment of Inertia Strong-Axis (in^4)			228.52		47.63
Moment of Inertia Weak-Axis (in^4)			171.64		2.04
Number of Plies			1		1
Interior Perpemdicular Bearing Width (in)			3.25		
End Perpemdicular Bearing Width (in)			2		
Demand Bending Stress (psi)					
fb = M/S			**1727**		OK
Demand Shear Stress (psi)					
fv=1.5 x (V/bd)			**261**		NO GOOD
Demand Interior Perpendicular Bearing Stress (psi)					
fPerp-c= (R/bd_b)			**777**		NO GOOD
Demand End Perpendicular Bearing Stress (psi)					
fPerp-c= (R/bd_b)			**583**		OK

Project Name:	Glynn Archer School	Project Code	
Member Information:	Building B - First Floor 1B6 (2 SPANS)	Date:	

Members Bending stress F_b (psi)		1500
Members Shear stress F_v (psi)		175
Members Perpendicular Bearing Stress		825
Load duration Factor C_D		1
Wet Service Factor C_M		1
temperature Factor C_t		1
Beam Stability Factor CL		1
Size Factor C_F		1.05
Flat Use Factor C_{fu}		1.3
Incising Factor Ci		0.8
Repetitive Member Factor C_r		1.15
Interior Bearing Arear Factor C_b		1.12
End Bearing Arear Factor C_b		1.19
Adjusted Allowable Bending Stress (psi)		
$F'_b=F_b \times C_D \times C_M \times C_t \times C_L \times C_F \times C_{fu} \times C_i \times C_r$		**1883.7**
Adjusted Allowable Shear Stress (psi)		
$F'_v=F_v \times C_D \times C_M \times C_t \times C_F \times C_{fu} \times C_i$		**147**
Adjusted Allowable perpendicular Int. bearing Stress (psi)		
$F'_{perp\text{-}c}=F_{perp\text{-}c} \times C_M \times C_t \times C_i \times C_b$		**736**
Adjusted Allowable End perpendicular bearing Stress (psi)		
$F'_{perp\text{-}c}=F_{perp\text{-}c} \times C_M \times C_t \times C_i \times C_b$		**823**

Demand Moment (lbs-ft)			3558.83		
Demand Shear (lbs)			3272.48		
Interior Demand Reaction R (lbs)			6544.97		
End Demand Reaction R (lbs)			1963.49		
Member Properties:					
Exist Width b (in)	5.50	Exist Depth d (in)	7.50		
New Width b (in)	1.5	New Depth d (in)	7.25		
Section Modulus (in^3)			51.56		13.14
Moment of Inertia Strong-Axis (in^4)			193.36		47.63
Moment of Inertia Weak-Axis (in^4)			103.98		2.04
Number of Plies			1		0
Interior Perpemdicular Bearing Width (in)			3.25		
End Perpemdicular Bearing Width (in)			2		
Demand Bending Stress (psi)					
fb = M/S			**828**		OK
Demand Shear Stress (psi)					
fv=1.5 x (V/bd)			**119**		OK
Demand Interior Perpendicular Bearing Stress (psi)					
fPerp-c= (R/bd_b)			**366**		OK
Demand End Perpendicular Bearing Stress (psi)					
fPerp-c= (R/bd_b)			**178**		OK

Project Name:	Glynn Archer School	Project Code	
Member Information:	Building B - First Floor 1B1 (SINGLE SPAN)	Date:	

Members Bending stress F_b (psi)		1500	Demand Moment (lbs-ft)		14235.30		
Members Shear stress F_v (psi)		175	Demand Shear (lbs)		5235.97		
Members Perpendicular Bearing Stress		825	Interior Demand Reaction R (lbs)		5235.97		
			End Demand Reaction R (lbs)		5235.97		
Load duration Factor C_D		1	Member Properties:				
Wet Service Factor C_M		1	Exist Width b (in)	5.50	Exist Depth d (in)	7.50	
temperature Factor C_t		1	New Width b (in)	1.5	New Depth d (in)	7.25	
Beam Stability Factor CL		1	Section Modulus (in^3)			51.56	13.14
Size Factor C_F		1.05	Moment of Inertia Strong-Axis (in^4)			193.36	47.63
Flat Use Factor C_{fu}		1.3	Moment of Inertia Weak-Axis (in^4)			103.98	2.04
Incising Factor Ci		0.8	Number of Plies			1	3
Repetitive Member Factor C_r		1.15	Interior Perpemdicular Bearing Width (in)			3.25	
Interior Bearing Arear Factor C_b		1.00	End Perpemdicular Bearing Width (in)			2	
End Bearing Arear Factor C_b		1.19					
Adjusted Allowable Bending Stress (psi)			Demand Bending Stress (psi)				
$F'_b=F_b \times C_D \times C_M \times C_t \times C_L \times C_F \times C_{fu} \times C_i \times C_r$		**1883.7**	fb = M/S			**1878**	OK
Adjusted Allowable Shear Stress (psi)			Demand Shear Stress (psi)				
$F'_v=F_v \times C_D \times C_M \times C_t \times C_F \times C_{fu} \times C_i$		**147**	fv=1.5 x (V/bd)			**106**	OK
Adjusted Allowable perpendicular Int. bearing Stress (psi)			Demand Interior Perpendicular Bearing Stress (psi)				
$F'_{perp\text{-}c}=F_{perp\text{-}c} \times C_M \times C_t \times C_i \times C_b$		**660**	fPerp-c= (R/bd_b)			**293**	OK
Adjusted Allowable End perpendicular bearing Stress (psi)			Demand End Perpendicular Bearing Stress (psi)				
$F'_{perp\text{-}c}=F_{perp\text{-}c} \times C_M \times C_t \times C_i \times C_b$		**823**	fPerp-c= (R/bd_b)			**476**	OK

Project Name:	Glynn Archer School	Project Code	
Member Information:	Building B - First Floor 1B6 (2 SPANS)	Date:	

Members Bending stress F_b (psi)		1500	Demand Moment (lbs-ft)		7002.17		
Members Shear stress F_v (psi)		175	Demand Shear (lbs)		6668.73		
Members Perpendicular Bearing Stress		825	Interior Demand Reaction R (lbs)		13337.46		
			End Demand Reaction R (lbs)		4001.24		
Load duration Factor C_D		1	Member Properties:				
Wet Service Factor C_M		1	Exist Width b (in)	5.50	Exist Depth d (in)	7.50		
temperature Factor C_t		1	New Width b (in)	1.5	New Depth d (in)	7.25		
Beam Stability Factor CL		1	Section Modulus (in^3)			51.56		13.14
Size Factor C_F		1.05	Moment of Inertia Strong-Axis (in^4)			193.36		47.63
Flat Use Factor C_{fu}		1.3	Moment of Inertia Weak-Axis (in^4)			103.98		2.04
Incising Factor Ci		0.8	Number of Plies			1		0
Repetitive Member Factor C_r		1.15	Interior Perpemdicular Bearing Width (in)			3.25		
Interior Bearing Arear Factor C_b		1.12	End Perpemdicular Bearing Width (in)			2		
End Bearing Arear Factor C_b		1.19						
Adjusted Allowable Bending Stress (psi)			Demand Bending Stress (psi)					
$F'_b=F_b \times C_D \times C_M \times C_t \times C_L \times C_F \times C_{fu} \times C_i \times C_r$		**1883.7**	fb = M/S			**1630**		OK
Adjusted Allowable Shear Stress (psi)			Demand Shear Stress (psi)					
$F'_v=F_v \times C_D \times C_M \times C_t \times C_F \times C_{fu} \times C_i$		**147**	fv=1.5 x (V/bd)			**242**		NO GOOD
Adjusted Allowable perpendicular Int. bearing Stress (psi)			Demand Interior Perpendicular Bearing Stress (psi)					
$F'_{perp\text{-}c}=F_{perp\text{-}c} \times C_M \times C_t \times C_i \times C_b$		**736**	fPerp-c= (R/bd_b)			**746**		NO GOOD
Adjusted Allowable End perpendicular bearing Stress (psi)			Demand End Perpendicular Bearing Stress (psi)					
$F'_{perp\text{-}c}=F_{perp\text{-}c} \times C_M \times C_t \times C_i \times C_b$		**823**	fPerp-c= (R/bd_b)			**364**		OK

Project Name:	Glynn Archer School	Project Code	
Member Information:	Building B - First Floor 1B6 (2 SPANS)	Date:	

Members Bending stress F_b (psi)		1500	Demand Moment (lbs-ft)		4679.63		
Members Shear stress F_v (psi)		175	Demand Shear (lbs)		3085.47		
Members Perpendicular Bearing Stress		825	Interior Demand Reaction R (lbs)		6170.94		
			End Demand Reaction R (lbs)		1851.28		
Load duration Factor C_D		1	Member Properties:				
Wet Service Factor C_M		1	Exist Width b (in)	3.25	Exist Depth d (in)	7.50	
temperature Factor C_t		1	New Width b (in)	1.5	New Depth d (in)	7.25	
Beam Stability Factor CL		1	Section Modulus (in^3)			30.47	13.14
Size Factor C_F		1.05	Moment of Inertia Strong-Axis (in^4)			114.26	47.63
Flat Use Factor C_{fu}		1.3	Moment of Inertia Weak-Axis (in^4)			21.46	2.04
Incising Factor Ci		0.8	Number of Plies			1	1
Repetitive Member Factor C_r		1.15	Interior Perpemdicular Bearing Width (in)			3.25	
Interior Bearing Arear Factor C_b		1.12	End Perpemdicular Bearing Width (in)			2	
End Bearing Arear Factor C_b		1.19					
Adjusted Allowable Bending Stress (psi)			Demand Bending Stress (psi)				
$F'_b=F_b \times C_D \times C_M \times C_t \times C_L \times C_F \times C_{fu} \times C_i \times C_r$		**1883.7**	fb = M/S			**1288**	OK
Adjusted Allowable Shear Stress (psi)			Demand Shear Stress (psi)				
$F'_v=F_v \times C_D \times C_M \times C_t \times C_F \times C_{fu} \times C_i$		**147**	fv=1.5 x (V/bd)			**131**	OK
Adjusted Allowable perpendicular Int. bearing Stress (psi)			Demand Interior Perpendicular Bearing Stress (psi)				
$F'_{perp\text{-}c}=F_{perp\text{-}c} \times C_M \times C_t \times C_i \times C_b$		**736**	fPerp-c= (R/bd_b)			**400**	OK
Adjusted Allowable End perpendicular bearing Stress (psi)			Demand End Perpendicular Bearing Stress (psi)				
$F'_{perp\text{-}c}=F_{perp\text{-}c} \times C_M \times C_t \times C_i \times C_b$		**823**	fPerp-c= (R/bd_b)			**285**	OK

Project Name:	Glynn Archer School	Project Code	
Member Information:	Building A - First Floor 1A5 (3 SPANS)	Date:	

Members Bending stress F_b (psi)		1500
Members Shear stress F_v (psi)		175
Members Perpendicular Bearing Stress		825
Load duration Factor C_D		1
Wet Service Factor C_M		1
temperature Factor C_t		1
Beam Stability Factor CL		1
Size Factor C_F		1.05
Flat Use Factor C_{fu}		1.3
Incising Factor Ci		0.8
Repetitive Member Factor C_r		1.15
Interior Bearing Arear Factor C_b		1.00
End Bearing Arear Factor C_b		1.19
Adjusted Allowable Bending Stress (psi)		
$F'_b=F_b \times C_D \times C_M \times C_t \times C_L \times C_F \times C_{fu} \times C_i \times C_r$		**1883.7**
Adjusted Allowable Shear Stress (psi)		
$F'_v=F_v \times C_D \times C_M \times C_t \times C_F \times C_{fu} \times C_i$		**147**
Adjusted Allowable perpendicular Int. bearing Stress (psi)		
$F'_{perp\text{-}c}=F_{perp\text{-}c} \times C_M \times C_t \times C_i \times C_b$		**660**
Adjusted Allowable End perpendicular bearing Stress (psi)		
$F'_{perp\text{-}c}=F_{perp\text{-}c} \times C_M \times C_t \times C_i \times C_b$		**823**

Demand Moment (lbs-ft)			7294.65		
Demand Shear (lbs)			7835.14		
Interior Demand Reaction R (lbs)			15238.52		
End Demand Reaction R (lbs)			5714.44		
Member Properties:					
Exist Width b (in)	3.25	Exist Depth d (in)	7.50		
New Width b (in)	1.5	New Depth d (in)	7.25		
Section Modulus (in^3)			30.47		13.14
Moment of Inertia Strong-Axis (in^4)			114.26		47.63
Moment of Inertia Weak-Axis (in^4)			21.46		2.04
Number of Plies			1		0
Interior Perpemdicular Bearing Width (in)			3.25		
End Perpemdicular Bearing Width (in)			2		
Demand Bending Stress (psi)					
fb = M/S			**2873**		NO GOOD
Demand Shear Stress (psi)					
fv=1.5 x (V/bd)			**482**		NO GOOD
Demand Interior Perpendicular Bearing Stress (psi)					
fPerp-c= (R/bd_b)			**1443**		NO GOOD
Demand End Perpendicular Bearing Stress (psi)					
fPerp-c= (R/bd_b)			**879**		NO GOOD

Project Name:	Glynn Archer School	Project Code	
Member Information:	Building B - First floor Wood 1x6 Nominal Wood Sheathing	Date:	

Members Bending stress F_b (psi)		1500
Members Shear stress F_v (psi)		175
Members Perpendicular Bearing Stress		825
Load duration Factor C_D		1
Wet Service Factor C_M		1
temperature Factor C_t		1
Beam Stability Factor CL		1
Size Factor C_F		1
Flat Use Factor C_{fu}		1
Incising Factor Ci		0.8
Repetitive Member Factor C_r		1.15
Interior Bearing Arear Factor C_b		1.23
End Bearing Arear Factor C_b		1.23
Adjusted Allowable Bending Stress (psi)		
$F'_b=F_b \times C_D \times C_M \times C_t \times C_L \times C_F \times C_{fu} \times C_i \times C_r$		**1380**
Adjusted Allowable Shear Stress (psi)		
$F'_v=F_v \times C_D \times C_M \times C_t \times C_F \times C_{fu} \times C_i$		**140**
Adjusted Allowable perpendicular Int. bearing Stress (psi)		
$F'_{perp\text{-}c}=F_{perp\text{-}c} \times C_M \times C_t \times C_i \times C_b$		**812**
Adjusted Allowable End perpendicular bearing Stress (psi)		
$F'_{perp\text{-}c}=F_{perp\text{-}c} \times C_M \times C_t \times C_i \times C_b$		**812**

Demand Moment (lbs-ft)			25.39		
Demand Shear (lbs)			67.81		
Interior Demand Reaction R (lbs)			135.63		
End Demand Reaction R (lbs)			40.69		
Member Properties:					
Exist Width b (in)	5.5	Exist Depth d (in)	0.75		
New Width b (in)	0	New Depth d (in)	0		
Section Modulus (in^3)			0.52		0.00
Moment of Inertia Strong-Axis (in^4)			0.19		0.00
Moment of Inertia Weak-Axis (in^4)			10.40		0.00
Number of Plies			1		0
Interior Perpemdicular Bearing Width (in)			1.625		
End Perpemdicular Bearing Width (in)			1.625		
Demand Bending Stress (psi)					
fb = M/S			**591**		OK
Demand Shear Stress (psi)					
fv=1.5 x (V/bd)			**25**		OK
Demand Interior Perpendicular Bearing Stress (psi)					
fPerp-c= (R/bd_b)			**15**		OK
Demand End Perpendicular Bearing Stress (psi)					
fPerp-c= (R/bd_b)			**5**		OK

Project Name:	Glynn Archer School	Project Code	
Member Information:	Building A - First Floor 1A5 (3 SPANS)	Date:	

Members Bending stress F_b (psi)		1500
Members Shear stress F_v (psi)		175
Members Perpendicular Bearing Stress		825
Load duration Factor C_D		1
Wet Service Factor C_M		1
temperature Factor C_t		1
Beam Stability Factor CL		1
Size Factor C_F		1.05
Flat Use Factor C_{fu}		1.3
Incising Factor Ci		0.8
Repetitive Member Factor C_r		1.15
Interior Bearing Arear Factor C_b		1.00
End Bearing Arear Factor C_b		1.19
Adjusted Allowable Bending Stress (psi)		
$F'_b=F_b \times C_D \times C_M \times C_t \times C_L \times C_F \times C_{fu} \times C_i \times C_r$		**1883.7**
Adjusted Allowable Shear Stress (psi)		
$F'_v=F_v \times C_D \times C_M \times C_t \times C_F \times C_{fu} \times C_i$		**147**
Adjusted Allowable perpendicular Int. bearing Stress (psi)		
$F'_{perp\text{-}c}=F_{perp\text{-}c} \times C_M \times C_t \times C_i \times C_b$		**660**
Adjusted Allowable End perpendicular bearing Stress (psi)		
$F'_{perp\text{-}c}=F_{perp\text{-}c} \times C_M \times C_t \times C_i \times C_b$		**825**

Demand Moment (lbs-ft)			2879.99		
Demand Shear (lbs)			2909.54		
Interior Demand Reaction R (lbs)			5658.74		
End Demand Reaction R (lbs)			2122.03		
Member Properties:					
Exist Width b (in)	5.50	Exist Depth d (in)	7.50		
New Width b (in)	1.5	New Depth d (in)	7.25		
Section Modulus (in^3)			51.56		13.14
Moment of Inertia Strong-Axis (in^4)			193.36		47.63
Moment of Inertia Weak-Axis (in^4)			103.98		2.04
Number of Plies			1		0
Interior Perpemdicular Bearing Width (in)			12		
End Perpemdicular Bearing Width (in)			6		
Demand Bending Stress (psi)					
fb = M/S			**670**		OK
Demand Shear Stress (psi)					
fv=1.5 x (V/bd)			**106**		OK
Demand Interior Perpendicular Bearing Stress (psi)					
fPerp-c= (R/bd_b)			**86**		OK
Demand End Perpendicular Bearing Stress (psi)					
fPerp-c= (R/bd_b)			**64**		OK

Project Name:	Glynn Archer School	Project Code	
Member Information:	Building B - First Floor 1B4 (2 SPANS)	Date:	

Members Bending stress F_b (psi)		1500
Members Shear stress F_v (psi)		175
Members Perpendicular Bearing Stress		825
Load duration Factor C_D		1
Wet Service Factor C_M		1
temperature Factor C_t		1
Beam Stability Factor CL		1
Size Factor C_F		1.05
Flat Use Factor C_{fu}		1.3
Incising Factor Ci		0.8
Repetitive Member Factor C_r		1.15
Interior Bearing Arear Factor C_b		1.00
End Bearing Arear Factor C_b		1.19
Adjusted Allowable Bending Stress (psi)		
$F'_b=F_b \times C_D \times C_M \times C_t \times C_L \times C_F \times C_{fu} \times C_i \times C_r$		**1883.7**
Adjusted Allowable Shear Stress (psi)		
$F'_v=F_v \times C_D \times C_M \times C_t \times C_F \times C_{fu} \times C_i$		**147**
Adjusted Allowable perpendicular Int. bearing Stress (psi)		
$F'_{perp\text{-}c}=F_{perp\text{-}c} \times C_M \times C_t \times C_i \times C_b$		**660**
Adjusted Allowable End perpendicular bearing Stress (psi)		
$F'_{perp\text{-}c}=F_{perp\text{-}c} \times C_M \times C_t \times C_i \times C_b$		**823**

Demand Moment (lbs-ft)			4663.49		
Demand Shear (lbs)			3371.20		
Interior Demand Reaction R (lbs)			6742.40		
End Demand Reaction R (lbs)			2022.72		
Member Properties:					
Exist Width b (in)	5.50	Exist Depth d (in)	7.50		
New Width b (in)	1.5	New Depth d (in)	7.25		
Section Modulus (in^3)			51.56		13.14
Moment of Inertia Strong-Axis (in^4)			193.36		47.63
Moment of Inertia Weak-Axis (in^4)			103.98		2.04
Number of Plies			1		0
Interior Perpemdicular Bearing Width (in)			3.25		
End Perpemdicular Bearing Width (in)			2		
Demand Bending Stress (psi)					
fb = M/S			**1085**		OK
Demand Shear Stress (psi)					
fv=1.5 x (V/bd)			**123**		OK
Demand Interior Perpendicular Bearing Stress (psi)					
fPerp-c= (R/bd_b)			**377**		OK
Demand End Perpendicular Bearing Stress (psi)					
fPerp-c= (R/bd_b)			**184**		OK

Project Name:	Glynn Archer School	Project Code	
Member Information:	Building A - First Floor 1A5 (3 SPANS)	Date:	

Members Bending stress F_b (psi)		1500
Members Shear stress F_v (psi)		175
Members Perpendicular Bearing Stress		825
Load duration Factor C_D		1
Wet Service Factor C_M		1
temperature Factor C_t		1
Beam Stability Factor CL		1
Size Factor C_F		1.05
Flat Use Factor C_{fu}		1.3
Incising Factor Ci		0.8
Repetitive Member Factor C_r		1.15
Interior Bearing Arear Factor C_b		1.00
End Bearing Arear Factor C_b		1.19
Adjusted Allowable Bending Stress (psi)		
$F'_b=F_b \times C_D \times C_M \times C_t \times C_L \times C_F \times C_{fu} \times C_i \times C_r$		**1883.7**
Adjusted Allowable Shear Stress (psi)		
$F'_v=F_v \times C_D \times C_M \times C_t \times C_F \times C_{fu} \times C_i$		**147**
Adjusted Allowable perpendicular Int. bearing Stress (psi)		
$F'_{perp\text{-}c}=F_{perp\text{-}c} \times C_M \times C_t \times C_i \times C_b$		**660**
Adjusted Allowable End perpendicular bearing Stress (psi)		
$F'_{perp\text{-}c}=F_{perp\text{-}c} \times C_M \times C_t \times C_i \times C_b$		**825**

Demand Moment (lbs-ft)			8373.32		
Demand Shear (lbs)			8459.23		
Interior Demand Reaction R (lbs)			16452.31		
End Demand Reaction R (lbs)			6169.61		
Member Properties:					
Exist Width b (in)	5.50	Exist Depth d (in)	7.50		
New Width b (in)	1.5	New Depth d (in)	7.25		
Section Modulus (in^3)			51.56		13.14
Moment of Inertia Strong-Axis (in^4)			193.36		47.63
Moment of Inertia Weak-Axis (in^4)			103.98		2.04
Number of Plies			1		0
Interior Perpemdicular Bearing Width (in)			12		
End Perpemdicular Bearing Width (in)			6		
Demand Bending Stress (psi)					
fb = M/S			**1949**		NO GOOD
Demand Shear Stress (psi)					
fv=1.5 x (V/bd)			**308**		NO GOOD
Demand Interior Perpendicular Bearing Stress (psi)					
fPerp-c= (R/bd_b)			**249**		OK
Demand End Perpendicular Bearing Stress (psi)					
fPerp-c= (R/bd_b)			**187**		OK

Project Name:	Glynn Archer School	Project Code	
Member Information:	Building B - First Floor 1B4 (2 SPANS)	Date:	

Members Bending stress F_b (psi)		1500
Members Shear stress F_v (psi)		175
Members Perpendicular Bearing Stress		825
Load duration Factor C_D		1
Wet Service Factor C_M		1
temperature Factor C_t		1
Beam Stability Factor CL		1
Size Factor C_F		1.05
Flat Use Factor C_{fu}		1.3
Incising Factor Ci		0.8
Repetitive Member Factor C_r		1.15
Interior Bearing Arear Factor C_b		1.00
End Bearing Arear Factor C_b		1.19
Adjusted Allowable Bending Stress (psi)		
$F'_b=F_b \times C_D \times C_M \times C_t \times C_L \times C_F \times C_{fu} \times C_i \times C_r$		**1883.7**
Adjusted Allowable Shear Stress (psi)		
$F'_v=F_v \times C_D \times C_M \times C_t \times C_F \times C_{fu} \times C_i$		**147**
Adjusted Allowable perpendicular Int. bearing Stress (psi)		
$F'_{perp\text{-}c}=F_{perp\text{-}c} \times C_M \times C_t \times C_i \times C_b$		**660**
Adjusted Allowable End perpendicular bearing Stress (psi)		
$F'_{perp\text{-}c}=F_{perp\text{-}c} \times C_M \times C_t \times C_i \times C_b$		**823**

Demand Moment (lbs-ft)			7688.15		
Demand Shear (lbs)			7380.63		
Interior Demand Reaction R (lbs)			14761.26		
End Demand Reaction R (lbs)			4428.38		
Member Properties:					
Exist Width b (in)	5.50	Exist Depth d (in)	7.50		
New Width b (in)	1.5	New Depth d (in)	7.25		
Section Modulus (in^3)			51.56		13.14
Moment of Inertia Strong-Axis (in^4)			193.36		47.63
Moment of Inertia Weak-Axis (in^4)			103.98		2.04
Number of Plies			1		0
Interior Perpemdicular Bearing Width (in)			3.25		
End Perpemdicular Bearing Width (in)			2		
Demand Bending Stress (psi)					
fb = M/S			**1789**		OK
Demand Shear Stress (psi)					
fv=1.5 x (V/bd)			**268**		NO GOOD
Demand Interior Perpendicular Bearing Stress (psi)					
fPerp-c= (R/bd_b)			**826**		NO GOOD
Demand End Perpendicular Bearing Stress (psi)					
fPerp-c= (R/bd_b)			**403**		OK

Project Name:	Glynn Archer School	Project Code	
Member Information:	Building B - First Floor 1B4 (2 SPANS)	Date:	

Members Bending stress F_b (psi)		1500	Demand Moment (lbs-ft)		8161.34		
Members Shear stress F_v (psi)		175	Demand Shear (lbs)		5440.90		
Members Perpendicular Bearing Stress		825	Interior Demand Reaction R (lbs)		10881.79		
			End Demand Reaction R (lbs)		3264.54		
Load duration Factor C_D		1	Member Properties:				
Wet Service Factor C_M		1	Exist Width b (in)	5.50	Exist Depth d (in)	7.50		
temperature Factor C_t		1	New Width b (in)	1.5	New Depth d (in)	7.25		
Beam Stability Factor CL		1	Section Modulus (in^3)			51.56		13.14
Size Factor C_F		1.05	Moment of Inertia Strong-Axis (in^4)			193.36		47.63
Flat Use Factor C_{fu}		1.3	Moment of Inertia Weak-Axis (in^4)			103.98		2.04
Incising Factor Ci		0.8	Number of Plies			1		2
Repetitive Member Factor C_r		1.15	Interior Perpemdicular Bearing Width (in)			3.25		
Interior Bearing Arear Factor C_b		1.00	End Perpemdicular Bearing Width (in)			2		
End Bearing Arear Factor C_b		1.19						
Adjusted Allowable Bending Stress (psi)			Demand Bending Stress (psi)					
$F'_b=F_b \times C_D \times C_M \times C_t \times C_L \times C_F \times C_{fu} \times C_i \times C_r$		**1883.7**	fb = M/S			**1258**		OK
Adjusted Allowable Shear Stress (psi)			Demand Shear Stress (psi)					
$F'_v=F_v \times C_D \times C_M \times C_t \times C_F \times C_{fu} \times C_i$		**147**	fv=1.5 x (V/bd)			**130**		OK
Adjusted Allowable perpendicular Int. bearing Stress (psi)			Demand Interior Perpendicular Bearing Stress (psi)					
$F'_{perp\text{-}c}=F_{perp\text{-}c} \times C_M \times C_t \times C_i \times C_b$		**660**	fPerp-c= (R/bd_b)			**394**		OK
Adjusted Allowable End perpendicular bearing Stress (psi)			Demand End Perpendicular Bearing Stress (psi)					
$F'_{perp\text{-}c}=F_{perp\text{-}c} \times C_M \times C_t \times C_i \times C_b$		**823**	fPerp-c= (R/bd_b)			**297**		OK

Project Name:	Glynn Archer School	Project Code	
Member Information:	Building B - First Floor 1B4 (2 SPANS)	Date:	

Members Bending stress F_b (psi)		1500	Demand Moment (lbs-ft)			3613.58		
Members Shear stress F_v (psi)		175	Demand Shear (lbs)			3297.56		
Members Perpendicular Bearing Stress		825	Interior Demand Reaction R (lbs)			6595.12		
			End Demand Reaction R (lbs)			1978.54		
Load duration Factor C_D		1	Member Properties:					
Wet Service Factor C_M		1	Exist Width b (in)	6.50	Exist Depth d (in)	7.50		
temperature Factor C_t		1	New Width b (in)	1.5	New Depth d (in)	7.25		
Beam Stability Factor CL		1	Section Modulus (in^3)			60.94		13.14
Size Factor C_F		1.05	Moment of Inertia Strong-Axis (in^4)			228.52		47.63
Flat Use Factor C_{fu}		1.3	Moment of Inertia Weak-Axis (in^4)			171.64		2.04
Incising Factor Ci		0.8	Number of Plies			1		0
Repetitive Member Factor C_r		1.15	Interior Perpemdicular Bearing Width (in)			3.25		
Interior Bearing Arear Factor C_b		1.00	End Perpemdicular Bearing Width (in)			2		
End Bearing Arear Factor C_b		1.19						
Adjusted Allowable Bending Stress (psi)			Demand Bending Stress (psi)					
$F'_b=F_b \times C_D \times C_M \times C_t \times C_L \times C_F \times C_{fu} \times C_i \times C_r$		**1883.7**	fb = M/S			**712**		OK
Adjusted Allowable Shear Stress (psi)			Demand Shear Stress (psi)					
$F'_v=F_v \times C_D \times C_M \times C_t \times C_F \times C_{fu} \times C_i$		**147**	fv=1.5 x (V/bd)			**101**		OK
Adjusted Allowable perpendicular Int. bearing Stress (psi)			Demand Interior Perpendicular Bearing Stress (psi)					
$F'_{perp\text{-}c}=F_{perp\text{-}c} \times C_M \times C_t \times C_i \times C_b$		**660**	fPerp-c= (R/bd_b)			**312**		OK
Adjusted Allowable End perpendicular bearing Stress (psi)			Demand End Perpendicular Bearing Stress (psi)					
$F'_{perp\text{-}c}=F_{perp\text{-}c} \times C_M \times C_t \times C_i \times C_b$		**823**	fPerp-c= (R/bd_b)			**152**		OK

Project Name:	Glynn Archer School	Project Code	
Member Information:	Building A - First Floor 1A5 (3 SPANS)	Date:	

Members Bending stress F_b (psi)		1500
Members Shear stress F_v (psi)		175
Members Perpendicular Bearing Stress		825
Load duration Factor C_D		1
Wet Service Factor C_M		1
temperature Factor C_t		1
Beam Stability Factor CL		1
Size Factor C_F		1.05
Flat Use Factor C_{fu}		1.3
Incising Factor Ci		0.8
Repetitive Member Factor C_r		1.15
Interior Bearing Arear Factor C_b		1.00
End Bearing Arear Factor C_b		1.19
Adjusted Allowable Bending Stress (psi)		
$F'_b=F_b \times C_D \times C_M \times C_t \times C_L \times C_F \times C_{fu} \times C_i \times C_r$		**1883.7**
Adjusted Allowable Shear Stress (psi)		
$F'_v=F_v \times C_D \times C_M \times C_t \times C_F \times C_{fu} \times C_i$		**147**
Adjusted Allowable perpendicular Int. bearing Stress (psi)		
$F'_{perp\text{-}c}=F_{perp\text{-}c} \times C_M \times C_t \times C_i \times C_b$		**660**
Adjusted Allowable End perpendicular bearing Stress (psi)		
$F'_{perp\text{-}c}=F_{perp\text{-}c} \times C_M \times C_t \times C_i \times C_b$		**823**

Demand Moment (lbs-ft)			9028.03		
Demand Shear (lbs)			7936.73		
Interior Demand Reaction R (lbs)			15436.10		
End Demand Reaction R (lbs)			5788.54		
Member Properties:					
Exist Width b (in)	5.50	Exist Depth d (in)	7.50		
New Width b (in)	1.5	New Depth d (in)	7.25		
Section Modulus (in^3)			51.56		13.14
Moment of Inertia Strong-Axis (in^4)			193.36		47.63
Moment of Inertia Weak-Axis (in^4)			103.98		2.04
Number of Plies			1		0
Interior Perpemdicular Bearing Width (in)			3.25		
End Perpemdicular Bearing Width (in)			2		
Demand Bending Stress (psi)					
fb = M/S			**2101**		NO GOOD
Demand Shear Stress (psi)					
fv=1.5 x (V/bd)			**289**		NO GOOD
Demand Interior Perpendicular Bearing Stress (psi)					
fPerp-c= (R/bd_b)			**864**		NO GOOD
Demand End Perpendicular Bearing Stress (psi)					
fPerp-c= (R/bd_b)			**526**		OK

Project Name:	Glynn Archer School	Project Code	
Member Information:	Building B - First Floor 1B6 (2 SPANS)	Date:	

Members Bending stress F_b (psi)		1500	Demand Moment (lbs-ft)		12968.26		
Members Shear stress F_v (psi)		175	Demand Shear (lbs)		10446.85		
Members Perpendicular Bearing Stress		825	Interior Demand Reaction R (lbs)		20893.70		
			End Demand Reaction R (lbs)		6268.11		
Load duration Factor C_D		1	Member Properties:				
Wet Service Factor C_M		1	Exist Width b (in)	5.50	Exist Depth d (in)	7.50	
temperature Factor C_t		1	New Width b (in)	1.5	New Depth d (in)	7.25	
Beam Stability Factor CL		1	Section Modulus (in^3)			51.56	13.14
Size Factor C_F		1.05	Moment of Inertia Strong-Axis (in^4)			193.36	47.63
Flat Use Factor C_{fu}		1.3	Moment of Inertia Weak-Axis (in^4)			103.98	2.04
Incising Factor Ci		0.8	Number of Plies			1	1
Repetitive Member Factor C_r		1.15	Interior Perpemdicular Bearing Width (in)			3.25	
Interior Bearing Arear Factor C_b		1.12	End Perpemdicular Bearing Width (in)			2	
End Bearing Arear Factor C_b		1.19					
Adjusted Allowable Bending Stress (psi)			Demand Bending Stress (psi)				
$F'_b=F_b \times C_D \times C_M \times C_t \times C_L \times C_F \times C_{fu} \times C_i \times C_r$		**1883.7**	fb = M/S			**2405**	NO GOOD
Adjusted Allowable Shear Stress (psi)			Demand Shear Stress (psi)				
$F'_v=F_v \times C_D \times C_M \times C_t \times C_F \times C_{fu} \times C_i$		**147**	fv=1.5 x (V/bd)			**301**	NO GOOD
Adjusted Allowable perpendicular Int. bearing Stress (psi)			Demand Interior Perpendicular Bearing Stress (psi)				
$F'_{perp\text{-}c}=F_{perp\text{-}c} \times C_M \times C_t \times C_i \times C_b$		**736**	fPerp-c= (R/bd_b)			**918**	NO GOOD
Adjusted Allowable End perpendicular bearing Stress (psi)			Demand End Perpendicular Bearing Stress (psi)				
$F'_{perp\text{-}c}=F_{perp\text{-}c} \times C_M \times C_t \times C_i \times C_b$		**823**	fPerp-c= (R/bd_b)			**570**	OK

Project Name:	Glynn Archer School	Project Code	
Member Information:		Date:	

Members Bending stress F_b (psi)		1500
Members Shear stress F_v (psi)		175
Members Perpendicular Bearing Stress		825
Load duration Factor C_D		1
Wet Service Factor C_M		1
temperature Factor C_t		1
Beam Stability Factor CL		1
Size Factor C_F		1
Flat Use Factor C_{fu}		1
Incising Factor Ci		0.8
Repetitive Member Factor C_r		1.15
Interior Bearing Arear Factor C_b		1.12
End Bearing Arear Factor C_b		1.23
Adjusted Allowable Bending Stress (psi)		
$F'_b=F_b \times C_D \times C_M \times C_t \times C_L \times C_F \times C_{fu} \times C_i \times C_r$		**1380**
Adjusted Allowable Shear Stress (psi)		
$F'_v=F_v \times C_D \times C_M \times C_t \times C_F \times C_{fu} \times C_i$		**140**
Adjusted Allowable perpendicular Int. bearing Stress (psi)		
$F'_{perp\text{-}c}=F_{perp\text{-}c} \times C_M \times C_t \times C_i \times C_b$		**736**
Adjusted Allowable End perpendicular bearing Stress (psi)		
$F'_{perp\text{-}c}=F_{perp\text{-}c} \times C_M \times C_t \times C_i \times C_b$		**812**

Demand Moment (lbs-ft)			3613.576		
Demand Shear (lbs)			3297.559		
Interior Demand Reaction R (lbs)					
End Demand Reaction R (lbs)					
Member Properties:					
Exist Width b (in)	6.5	Exist Depth d (in)	7.5		
New Width b (in)	0	New Depth d (in)	0		
Section Modulus (in^3)			60.94		0.00
Moment of Inertia Strong-Axis (in^4)			228.52		0.00
Moment of Inertia Weak-Axis (in^4)			171.64		0.00
Number of Plies			1		0
Interior Perpemdicular Bearing Width (in)			3.25		
End Perpemdicular Bearing Width (in)			1.625		
Demand Bending Stress (psi)					
fb = M/S			**712**		OK
Demand Shear Stress (psi)					
fv=1.5 x (V/bd)			**101**		OK
Demand Interior Perpendicular Bearing Stress (psi)					
fPerp-c= (R/bd_b)			**0**		OK
Demand End Perpendicular Bearing Stress (psi)					
fPerp-c= (R/bd_b)			**0**		OK

Project Name:	Glynn Archer School	Project Code	
Member Information:	Building A - First floor Wood 1x6 Nominal Wood Sheathing	Date:	

Members Bending stress F_b (psi)		1500	Demand Moment (lbs-ft)			25.389		
Members Shear stress F_v (psi)		175	Demand Shear (lbs)			67.8125		
Members Perpendicular Bearing Stress		825	Interior Demand Reaction R (lbs)			135.63		
			End Demand Reaction R (lbs)			48.83		
Load duration Factor C_D		1	Member Properties:					
Wet Service Factor C_M		1	Exist Width b (in)	5.5	Exist Depth d (in)	0.75		
temperature Factor C_t		1	New Width b (in)	0	New Depth d (in)	0		
Beam Stability Factor CL		1	Section Modulus (in^3)			0.52		0.00
Size Factor C_F		1	Moment of Inertia Strong-Axis (in^4)			0.19		0.00
Flat Use Factor C_{fu}		1	Moment of Inertia Weak-Axis (in^4)			10.40		0.00
Incising Factor Ci		0.8	Number of Plies			1		0
Repetitive Member Factor C_r		1.15	Interior Perpemdicular Bearing Width (in)			1.625		
Interior Bearing Arear Factor C_b		1.23	End Perpemdicular Bearing Width (in)			1.625		
End Bearing Arear Factor C_b		1.23						
Adjusted Allowable Bending Stress (psi)			Demand Bending Stress (psi)					
$F'_b=F_b \times C_D \times C_M \times C_t \times C_L \times C_F \times C_{fu} \times C_i \times C_r$		**1380**	fb = M/S			**591**		OK
Adjusted Allowable Shear Stress (psi)			Demand Shear Stress (psi)					
$F'_v=F_v \times C_D \times C_M \times C_t \times C_F \times C_{fu} \times C_i$		**140**	fv=1.5 x (V/bd)			**25**		OK
Adjusted Allowable perpendicular Int. bearing Stress (psi)			Demand Interior Perpendicular Bearing Stress (psi)					
$F'_{perp\text{-}c}=F_{perp\text{-}c} \times C_M \times C_t \times C_i \times C_b$		**812**	fPerp-c= (R/bd_b)			**15**		OK
Adjusted Allowable End perpendicular bearing Stress (psi)			Demand End Perpendicular Bearing Stress (psi)					
$F'_{perp\text{-}c}=F_{perp\text{-}c} \times C_M \times C_t \times C_i \times C_b$		**812**	fPerp-c= (R/bd_b)			**5**		OK

Project Name:	Glynn Archer School	Project Code	
Member Information:		Date:	

Members Bending stress F_b (psi)		1500
Members Shear stress F_v (psi)		175
Members Perpendicular Bearing Stress		825
Load duration Factor C_D		1
Wet Service Factor C_M		1
temperature Factor C_t		1
Beam Stability Factor CL		1
Size Factor C_F		1
Flat Use Factor C_{fu}		1
Incising Factor Ci		0.8
Repetitive Member Factor C_r		1.15
Interior Bearing Arear Factor C_b		1.12
End Bearing Arear Factor C_b		1.23
Adjusted Allowable Bending Stress (psi)		
$F'_b=F_b \times C_D \times C_M \times C_t \times C_L \times C_F \times C_{fu} \times C_i \times C_r$		**1380**
Adjusted Allowable Shear Stress (psi)		
$F'_v=F_v \times C_D \times C_M \times C_t \times C_F \times C_{fu} \times C_i$		**140**
Adjusted Allowable perpendicular Int. bearing Stress (psi)		
$F'_{perp\text{-}c}=F_{perp\text{-}c} \times C_M \times C_t \times C_i \times C_b$		**736**
Adjusted Allowable End perpendicular bearing Stress (psi)		
$F'_{perp\text{-}c}=F_{perp\text{-}c} \times C_M \times C_t \times C_i \times C_b$		**812**

Demand Moment (lbs-ft)			-57.5359		
Demand Shear (lbs)			-153.675		
Interior Demand Reaction R (lbs)			-307.35		
End Demand Reaction R (lbs)			-110.65		
Member Properties:					
Exist Width b (in)	5.5	Exist Depth d (in)	0.75		
New Width b (in)	0	New Depth d (in)	0		
Section Modulus (in^3)			0.52		0.00
Moment of Inertia Strong-Axis (in^4)			0.19		0.00
Moment of Inertia Weak-Axis (in^4)			10.40		0.00
Number of Plies			1		0
Interior Perpemdicular Bearing Width (in)			3.25		
End Perpemdicular Bearing Width (in)			1.625		
Demand Bending Stress (psi)					
fb = M/S			**-1339**		OK
Demand Shear Stress (psi)					
fv=1.5 x (V/bd)			**-56**		OK
Demand Interior Perpendicular Bearing Stress (psi)					
fPerp-c= (R/bd_b)			**-17**		OK
Demand End Perpendicular Bearing Stress (psi)					
fPerp-c= (R/bd_b)			**-12**		OK

Project Name:	Glynn Archer School	Project Code	
Member Information:		Date:	

Members Bending stress F_b (psi)		1500
Members Shear stress F_v (psi)		175
Members Perpendicular Bearing Stress		825
Load duration Factor C_D		1
Wet Service Factor C_M		1
temperature Factor C_t		1
Beam Stability Factor CL		1
Size Factor C_F		1
Flat Use Factor C_{fu}		1
Incising Factor Ci		0.8
Repetitive Member Factor C_r		1.15
Interior Bearing Arear Factor C_b		1.12
End Bearing Arear Factor C_b		1.23
Adjusted Allowable Bending Stress (psi)		
$F'_b=F_b \times C_D \times C_M \times C_t \times C_L \times C_F \times C_{fu} \times C_i \times C_r$		**1380**
Adjusted Allowable Shear Stress (psi)		
$F'_v=F_v \times C_D \times C_M \times C_t \times C_F \times C_{fu} \times C_i$		**140**
Adjusted Allowable perpendicular Int. bearing Stress (psi)		
$F'_{perp\text{-}c}=F_{perp\text{-}c} \times C_M \times C_t \times C_i \times C_b$		**736**
Adjusted Allowable End perpendicular bearing Stress (psi)		
$F'_{perp\text{-}c}=F_{perp\text{-}c} \times C_M \times C_t \times C_i \times C_b$		**812**

Demand Moment (lbs-ft)			#REF!		
Demand Shear (lbs)			#REF!		
Interior Demand Reaction R (lbs)					
End Demand Reaction R (lbs)					
Member Properties:					
Exist Width b (in)	#REF!	Exist Depth d (in)	#REF!		
New Width b (in)	0	New Depth d (in)	0		
Section Modulus (in^3)			#REF!		0.00
Moment of Inertia Strong-Axis (in^4)			#REF!		0.00
Moment of Inertia Weak-Axis (in^4)			#REF!		0.00
Number of Plies			1		0
Interior Perpemdicular Bearing Width (in)			3.25		
End Perpemdicular Bearing Width (in)			1.625		
Demand Bending Stress (psi)					
fb = M/S			**#REF!**		#REF!
Demand Shear Stress (psi)					
fv=1.5 x (V/bd)			**#REF!**		#REF!
Demand Interior Perpendicular Bearing Stress (psi)					
fPerp-c= (R/bd_b)			**#REF!**		#REF!
Demand End Perpendicular Bearing Stress (psi)					
fPerp-c= (R/bd_b)			**#REF!**		#REF!

Project Name:	Glynn Archer School	Project Code	
Member Information:		Date:	

Members Bending stress F_b (psi)		1500
Members Shear stress F_v (psi)		175
Members Perpendicular Bearing Stress		825
Load duration Factor C_D		1
Wet Service Factor C_M		1
temperature Factor C_t		1
Beam Stability Factor CL		1
Size Factor C_F		1
Flat Use Factor C_{fu}		1
Incising Factor Ci		0.8
Repetitive Member Factor C_r		1.15
Interior Bearing Arear Factor C_b		1.12
End Bearing Arear Factor C_b		1.23
Adjusted Allowable Bending Stress (psi)		
$F'_b=F_b \times C_D \times C_M \times C_t \times C_L \times C_F \times C_{fu} \times C_i \times C_r$		**1380**
Adjusted Allowable Shear Stress (psi)		
$F'_v=F_v \times C_D \times C_M \times C_t \times C_F \times C_{fu} \times C_i$		**140**
Adjusted Allowable perpendicular Int. bearing Stress (psi)		
$F'_{perp\text{-}c}=F_{perp\text{-}c} \times C_M \times C_t \times C_i \times C_b$		**736**
Adjusted Allowable End perpendicular bearing Stress (psi)		
$F'_{perp\text{-}c}=F_{perp\text{-}c} \times C_M \times C_t \times C_i \times C_b$		**812**

Demand Moment (lbs-ft)			#REF!		
Demand Shear (lbs)			#REF!		
Interior Demand Reaction R (lbs)					
End Demand Reaction R (lbs)					
Member Properties:					
Exist Width b (in)	#REF!	Exist Depth d (in)	#REF!		
New Width b (in)	0	New Depth d (in)	0		
Section Modulus (in^3)			#REF!		0.00
Moment of Inertia Strong-Axis (in^4)			#REF!		0.00
Moment of Inertia Weak-Axis (in^4)			#REF!		0.00
Number of Plies			1		0
Interior Perpemdicular Bearing Width (in)			3.25		
End Perpemdicular Bearing Width (in)			1.625		
Demand Bending Stress (psi)					
fb = M/S			**#REF!**		#REF!
Demand Shear Stress (psi)					
fv=1.5 x (V/bd)			**#REF!**		#REF!
Demand Interior Perpendicular Bearing Stress (psi)					
fPerp-c= (R/bd_b)			**#REF!**		#REF!
Demand End Perpendicular Bearing Stress (psi)					
fPerp-c= (R/bd_b)			**#REF!**		#REF!

Project Name:	Glynn Archer School	Project Code	
Member Information:	Building A - First Floor 1A5 (3 SPANS)	Date:	

Members Bending stress F_b (psi)		1500
Members Shear stress F_v (psi)		175
Members Perpendicular Bearing Stress		825
Load duration Factor C_D		1
Wet Service Factor C_M		1
temperature Factor C_t		1
Beam Stability Factor CL		1
Size Factor C_F		1.05
Flat Use Factor C_{fu}		1.3
Incising Factor Ci		0.8
Repetitive Member Factor C_r		1.15
Interior Bearing Arear Factor C_b		1.00
End Bearing Arear Factor C_b		1.19
Adjusted Allowable Bending Stress (psi)		
$F'_b=F_b \times C_D \times C_M \times C_t \times C_L \times C_F \times C_{fu} \times C_i \times C_r$		**1883.7**
Adjusted Allowable Shear Stress (psi)		
$F'_v=F_v \times C_D \times C_M \times C_t \times C_F \times C_{fu} \times C_i$		**147**
Adjusted Allowable perpendicular Int. bearing Stress (psi)		
$F'_{perp\text{-}c}=F_{perp\text{-}c} \times C_M \times C_t \times C_i \times C_b$		**660**
Adjusted Allowable End perpendicular bearing Stress (psi)		
$F'_{perp\text{-}c}=F_{perp\text{-}c} \times C_M \times C_t \times C_i \times C_b$		**823**

Demand Moment (lbs-ft)			10454.17		
Demand Shear (lbs)			7597.15		
Interior Demand Reaction R (lbs)			14775.67		
End Demand Reaction R (lbs)			5540.87		
Member Properties:					
Exist Width b (in)	5.75	Exist Depth d (in)	5.63		
New Width b (in)	1.5	New Depth d (in)	7.25		
Section Modulus (in^3)			30.32		13.14
Moment of Inertia Strong-Axis (in^4)			85.28		47.63
Moment of Inertia Weak-Axis (in^4)			89.11		2.04
Number of Plies			1		5
Interior Perpemdicular Bearing Width (in)			3.25		
End Perpemdicular Bearing Width (in)			2		
Demand Bending Stress (psi)					
fb = M/S			**1306**		OK
Demand Shear Stress (psi)					
fv=1.5 x (V/bd)			**131**		OK
Demand Interior Perpendicular Bearing Stress (psi)					
fPerp-c= (R/bd_b)			**343**		OK
Demand End Perpendicular Bearing Stress (psi)					
fPerp-c= (R/bd_b)			**482**		OK

Project Name:	Glynn Archer School	Project Code	
Member Information:	Building B - First Floor 1B6 (2 SPANS)	Date:	

Members Bending stress F_b (psi)		1500
Members Shear stress F_v (psi)		175
Members Perpendicular Bearing Stress		825
Load duration Factor C_D		1
Wet Service Factor C_M		1
temperature Factor C_t		1
Beam Stability Factor CL		1
Size Factor C_F		1.05
Flat Use Factor C_{fu}		1.3
Incising Factor Ci		0.8
Repetitive Member Factor C_r		1.15
Interior Bearing Arear Factor C_b		1.12
End Bearing Arear Factor C_b		1.19
Adjusted Allowable Bending Stress (psi)		
$F'_b=F_b \times C_D \times C_M \times C_t \times C_L \times C_F \times C_{fu} \times C_i \times C_r$		**1883.7**
Adjusted Allowable Shear Stress (psi)		
$F'_v=F_v \times C_D \times C_M \times C_t \times C_F \times C_{fu} \times C_i$		**147**
Adjusted Allowable perpendicular Int. bearing Stress (psi)		
$F'_{perp\text{-}c}=F_{perp\text{-}c} \times C_M \times C_t \times C_i \times C_b$		**736**
Adjusted Allowable End perpendicular bearing Stress (psi)		
$F'_{perp\text{-}c}=F_{perp\text{-}c} \times C_M \times C_t \times C_i \times C_b$		**823**

Demand Moment (lbs-ft)			9322.07		
Demand Shear (lbs)			5443.54		
Interior Demand Reaction R (lbs)			10887.08		
End Demand Reaction R (lbs)			3266.13		
Member Properties:					
Exist Width b (in)	5.75	Exist Depth d (in)	5.63		
New Width b (in)	1.5	New Depth d (in)	7.25		
Section Modulus (in^3)			30.32		13.14
Moment of Inertia Strong-Axis (in^4)			85.28		47.63
Moment of Inertia Weak-Axis (in^4)			89.11		2.04
Number of Plies			1		3
Interior Perpemdicular Bearing Width (in)			3.25		
End Perpemdicular Bearing Width (in)			2		
Demand Bending Stress (psi)					
fb = M/S			**1604**		OK
Demand Shear Stress (psi)					
fv=1.5 x (V/bd)			**126**		OK
Demand Interior Perpendicular Bearing Stress (psi)					
fPerp-c= (R/bd_b)			**327**		OK
Demand End Perpendicular Bearing Stress (psi)					
fPerp-c= (R/bd_b)			**284**		OK

Project Name:	Glynn Archer School	Project Code	
Member Information:	Building B - First Floor 1B6 (2 SPANS)	Date:	

Members Bending stress F_b (psi)		1500
Members Shear stress F_v (psi)		175
Members Perpendicular Bearing Stress		825
Load duration Factor C_D		1
Wet Service Factor C_M		1
temperature Factor C_t		1
Beam Stability Factor CL		1
Size Factor C_F		1.05
Flat Use Factor C_{fu}		1.3
Incising Factor Ci		0.8
Repetitive Member Factor C_r		1.15
Interior Bearing Arear Factor C_b		1.12
End Bearing Arear Factor C_b		1.19
Adjusted Allowable Bending Stress (psi)		
$F'_b=F_b \times C_D \times C_M \times C_t \times C_L \times C_F \times C_{fu} \times C_i \times C_r$		**1883.7**
Adjusted Allowable Shear Stress (psi)		
$F'_v=F_v \times C_D \times C_M \times C_t \times C_F \times C_{fu} \times C_i$		**147**
Adjusted Allowable perpendicular Int. bearing Stress (psi)		
$F'_{perp\text{-}c}=F_{perp\text{-}c} \times C_M \times C_t \times C_i \times C_b$		**736**
Adjusted Allowable End perpendicular bearing Stress (psi)		
$F'_{perp\text{-}c}=F_{perp\text{-}c} \times C_M \times C_t \times C_i \times C_b$		**823**

Demand Moment (lbs-ft)			10402.01		
Demand Shear (lbs)			3852.59		
Interior Demand Reaction R (lbs)			7705.19		
End Demand Reaction R (lbs)			2311.56		
Member Properties:					
Exist Width b (in)	5.75	Exist Depth d (in)	5.63		
New Width b (in)	1.5	New Depth d (in)	7.25		
Section Modulus (in^3)			30.32		13.14
Moment of Inertia Strong-Axis (in^4)			85.28		47.63
Moment of Inertia Weak-Axis (in^4)			89.11		2.04
Number of Plies			1		3
Interior Perpemdicular Bearing Width (in)			3.25		
End Perpemdicular Bearing Width (in)			2		
Demand Bending Stress (psi)					
fb = M/S			**1790**		OK
Demand Shear Stress (psi)					
fv=1.5 x (V/bd)			**89**		OK
Demand Interior Perpendicular Bearing Stress (psi)					
fPerp-c= (R/bd_b)			**231**		OK
Demand End Perpendicular Bearing Stress (psi)					
fPerp-c= (R/bd_b)			**201**		OK

Halcrow Yolles

Project: GLYNN ARCHER SCHOOL				Project No.	No.
Design:	Drawn:	Checked:	Date:	W.P. No.	Scale
Subject: MAIN WIND FORCE RESISTING SYSTEM (MWFRS)				Reference	

Determine WIND LOADS: ASCE 7-10

~~The building is designated emergency preparedness, communication and operations center and other facilities required for emergency response.~~ ALL BUILDINGS AND OTHER STRUCTURES EXCEPT THOSE LISTED IN RISK CATEGORIES I, III, AND IV.

Risk Category = ~~IV~~ II

Basic wind for Risk category ~~IV~~ II, see Fig 26.5 ~~B~~ A = ~~200~~ 180 MPH =
Chapter - 28 Part 2:
Wind Load parameter:
Exposure category = C
Topographic factor $K_{zt} = (1 + K_1 + K_2 + K_3)^2 = 1.0$ $(K_1 = K_2 = K_3 = 0.0)$

Determine wind pressure fig 28.6-1

Basic wind speed (mph) = ~~200~~ 180
Roof slope Angle (degrees) = 0° to 5°

	Horizontal Pressure				Vertical Pressure				overhangs	
ZONE	A	B	C	D	E	F	G	H	E_{OH}	G_{OH}
P_{S30} (PSF)	~~63.4~~ 51.4	~~-32.9~~ -26.7	~~42.1~~ 34.1	~~-19.5~~ -15.8	~~76.2~~ -61.7	~~-43.5~~ -35.1	~~53.1~~ -43.0	~~-33.5~~ -27.2	~~-106.7~~ -86.4	~~-83.5~~ -67.7
P_S (PSF)	~~90.66~~ 73.5	~~47.05~~ -38.2	~~60.20~~ 48.8	~~-27.89~~ -22.6	~~-108.97~~ -88.2	~~-61.92~~ -50.2	~~75.93~~ -61.5	~~-47.91~~ -38.9	~~-152.58~~ -123.6	~~-119.44~~ -96.8

Adjustment for building height and exposure Fig 28.6.1 (λ):

$$\left.\begin{array}{l} h = 33'\text{-}0'' \\ \text{Exposure} = C \end{array}\right\} \Rightarrow \lambda = 1.43$$

Adjusted wind pressure $P_S = \lambda K_{zt} P_{S30}$

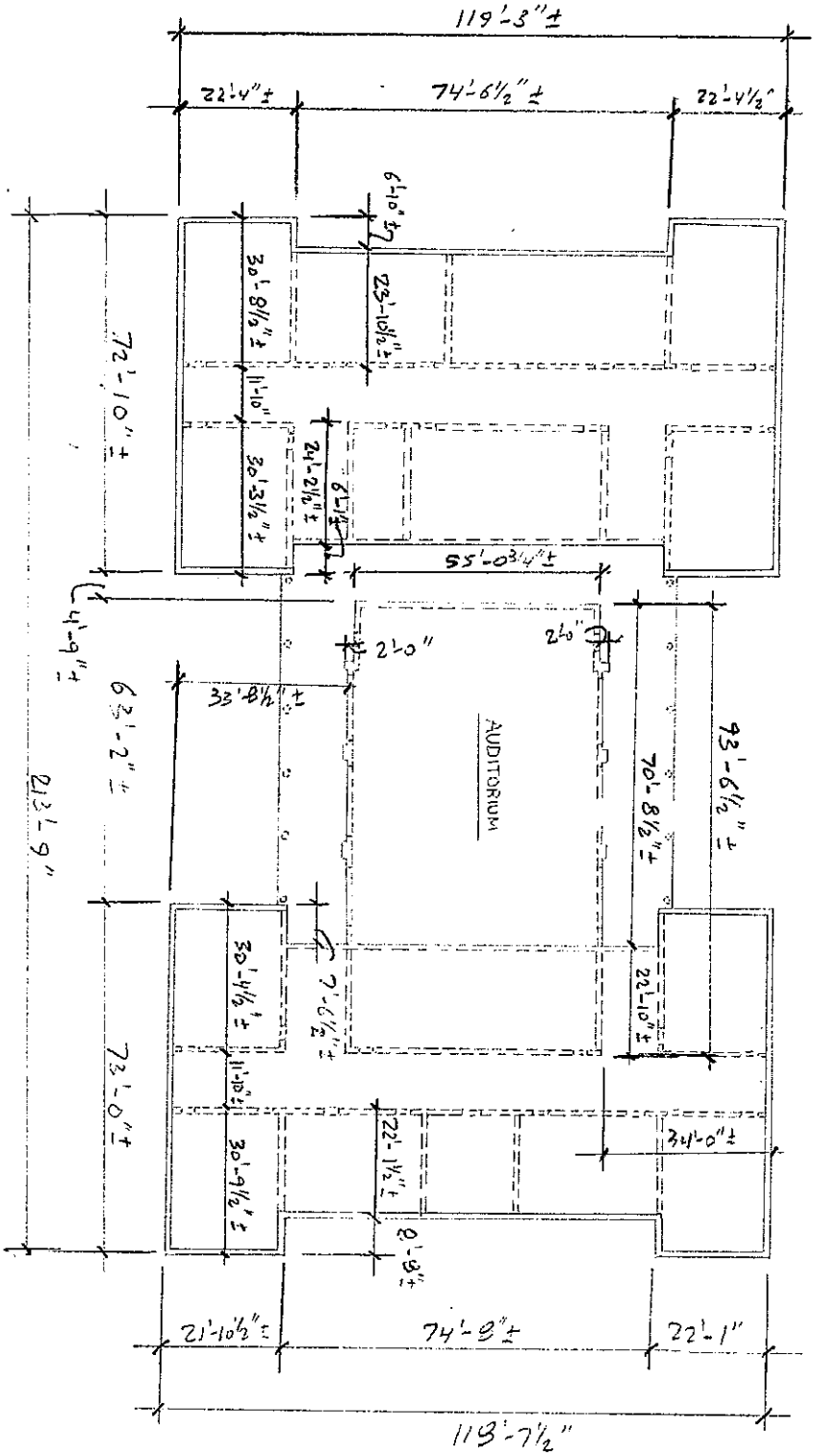
119'-3" ±
22'-4" ±
74'-6½" ±
22'-4½"
6'-10" ±
30'-8½" ±
23'-10½" ±
72'-10" ±
11'-10"
30'-3½" ±
24'-2½" ±
8'-1½" ±
55'-0¾" ±
4'-9" ±
2'-0"
2'-0"
33'-8½" ±
63'-2" ±
213'-9"
AUDITORIUM
93'-6½" ±
70'-8½" ±
30'-4½" ±
7'-6½" ±
22'-10" ±
73'-0" ±
11'-10" ±
30'-9½" ±
22'-1½" ±
34'-0" ±
8'-9" ±
21'-10½" ±
74'-9" ±
22'-1"
119'-7½"
"B" WING
"A" WING
UNITED ST.

Halcrow Yolles

Project:				Project No.	No.
Design:	Drawn:	Checked:	Date:	W.P. No.	Scale
Subject: BUILDING "B" DIAPHRAGM SHEAR				Reference	

BUILDING "B" ROOF LEVEL WIND LOADING: LATERAL

$W_{R1\,N/S} = W_{R1\,E/W} = 90.66\,psf \times (16.145'/2 + 3) = 1003.97\,PLF.$

$W_{RO\,N/S} = W_{RO\,E/W} = 60.20\,psf \times (11.0729') = 666.58\,PLF.$

2nd FLOOR LEVEL:

$W_{21\,N/S} = W_{21\,E/W} = 90.66\,psf \times (16.145'/2 + 14.145'/2) = 1273.12\,PLF$

$W_{20\,N/S} = W_{20\,E/W} = 60.20\,psf \times (15.145') = 911.79\,PLF$

FIRST FLOOR LEVEL:

$W_{11\,N/S} = W_{11\,E/W} = 90.66\,psf \times (14.145'/2 + 3/2) = 777.22\,PLF$

$W_{10\,N/S} = W_{10\,E/W} = 60.20\,psf \times (8.5729) = 516.09\,PLF$

Halcrow Yolles

Project:				Project No.	No.
Design:	Drawn:	Checked:	Date:	W.P. No.	Scale
Subject: AUDITORIUM / BUILDING "A" - DIAPHRAGM SHEAR				Reference	

Building "A" ROOF LEVEL WINDING LOADING.

NORTH - SOUTH LOADING:

$W^{R1}_{N/S} = 90.66\,psf \times (3 + 16.145'/2) = 1003.97$ PLF

$W^{R0}_{N/S} = 60.20\,psf \times (3 + 16.145'/2) = 666.58$ PLF

EAST - WEST LOADING:

$W^{R1}_{E/W} = 90.66\,psf \times (3 + 16.145'/2) = 1003.97$ PLF

$W^{R0}_{E/W} = 60.20\,psf \times (3 + 16.145'/2) = 666.58$ PLF

2nd FLOOR

$W_{21\,N/S} = 90.66\,psf \times (16.145'/2 + 14.145'/2) = 1373.12$ PLF

$W_{20\,N/S} = 60.20\,psf \times (15.145') = 911.79$ PLF

$W_{21\,N/S} = W_{21\,E/W}$ $\qquad$ $W_{20\,N/S} = W_{20\,E/W}$

FIRST FLOOR

$W_{11\,N/S} = 90.66\,psf \times (14.145'/2 + 3/2) = 777.22$ PLF

$W_{10\,N/S} = 60.20\,psf \times (8.5729) = 516.09$ PLF

$W_{11\,N/S} = W_{11\,E/W}$ $\qquad$ $W_{10\,N/S} = W_{10\,E/W}$

BUILDING "B"
ROOF LEVEL
WIND LOADING:
LATERAL

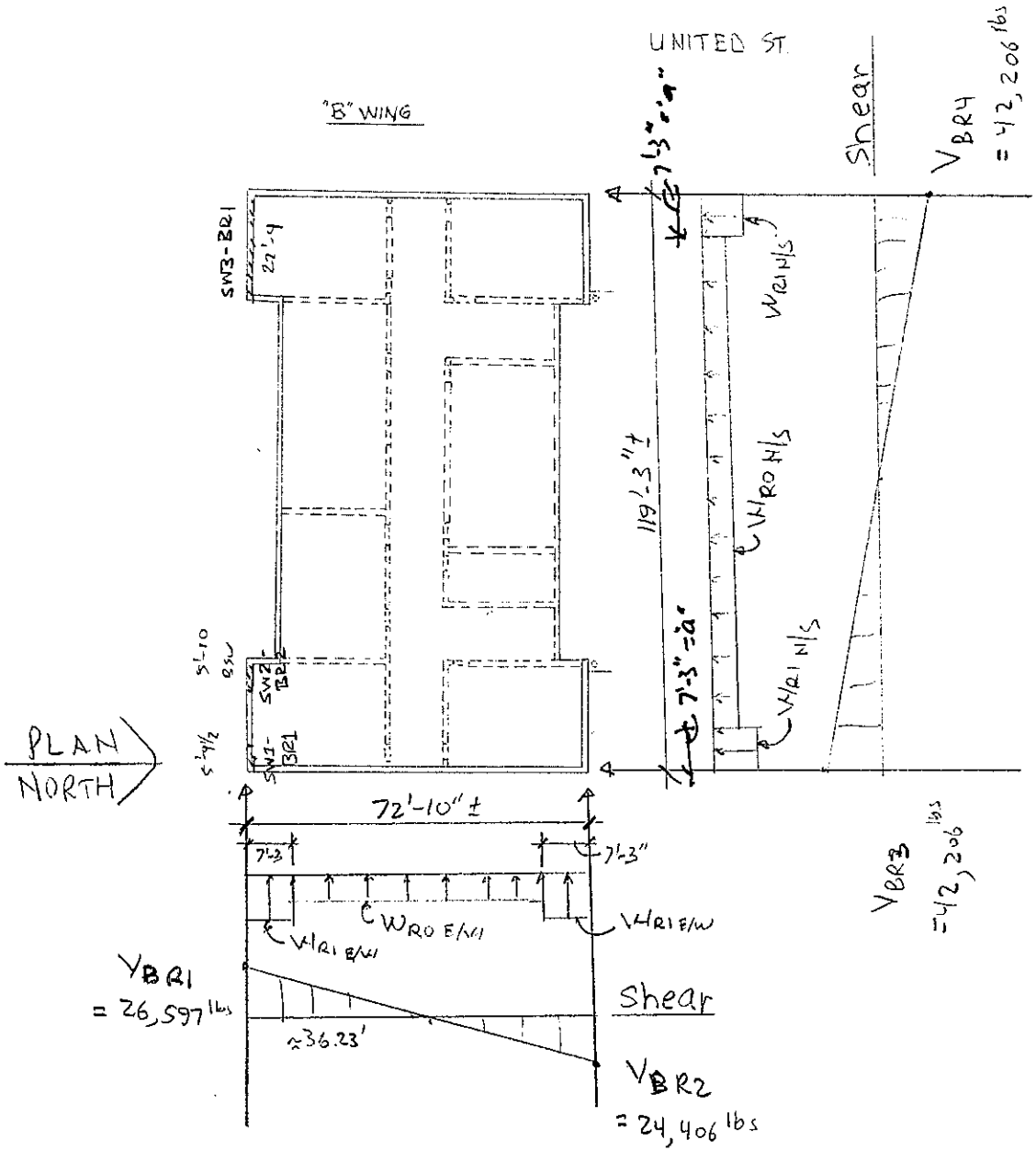

BUILDING "B"
2nd FLOOR
WIND LOADING: LATERAL

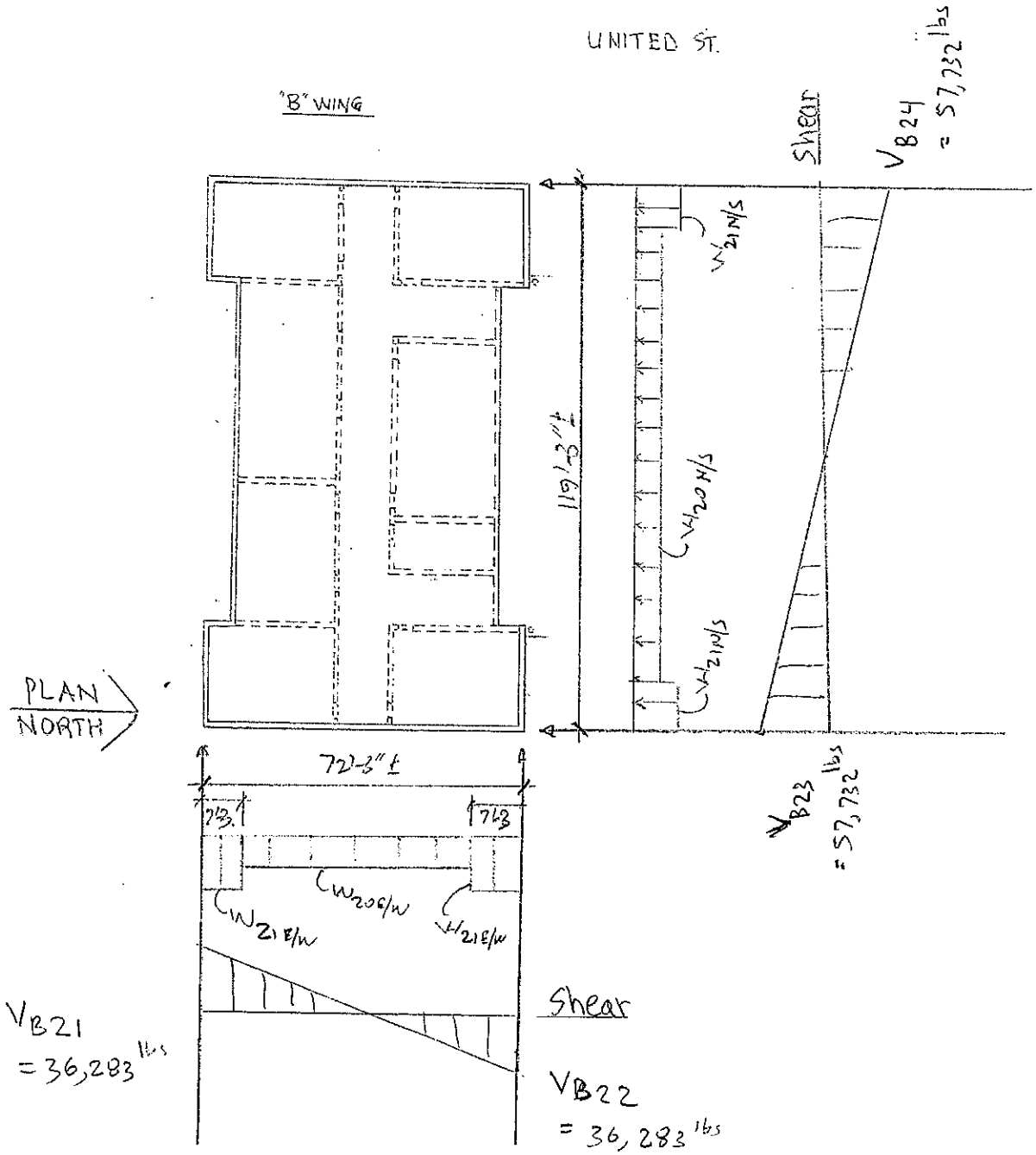

BUILDING "B"
FIRST FLOOR
WIND LOADING: LATERAL

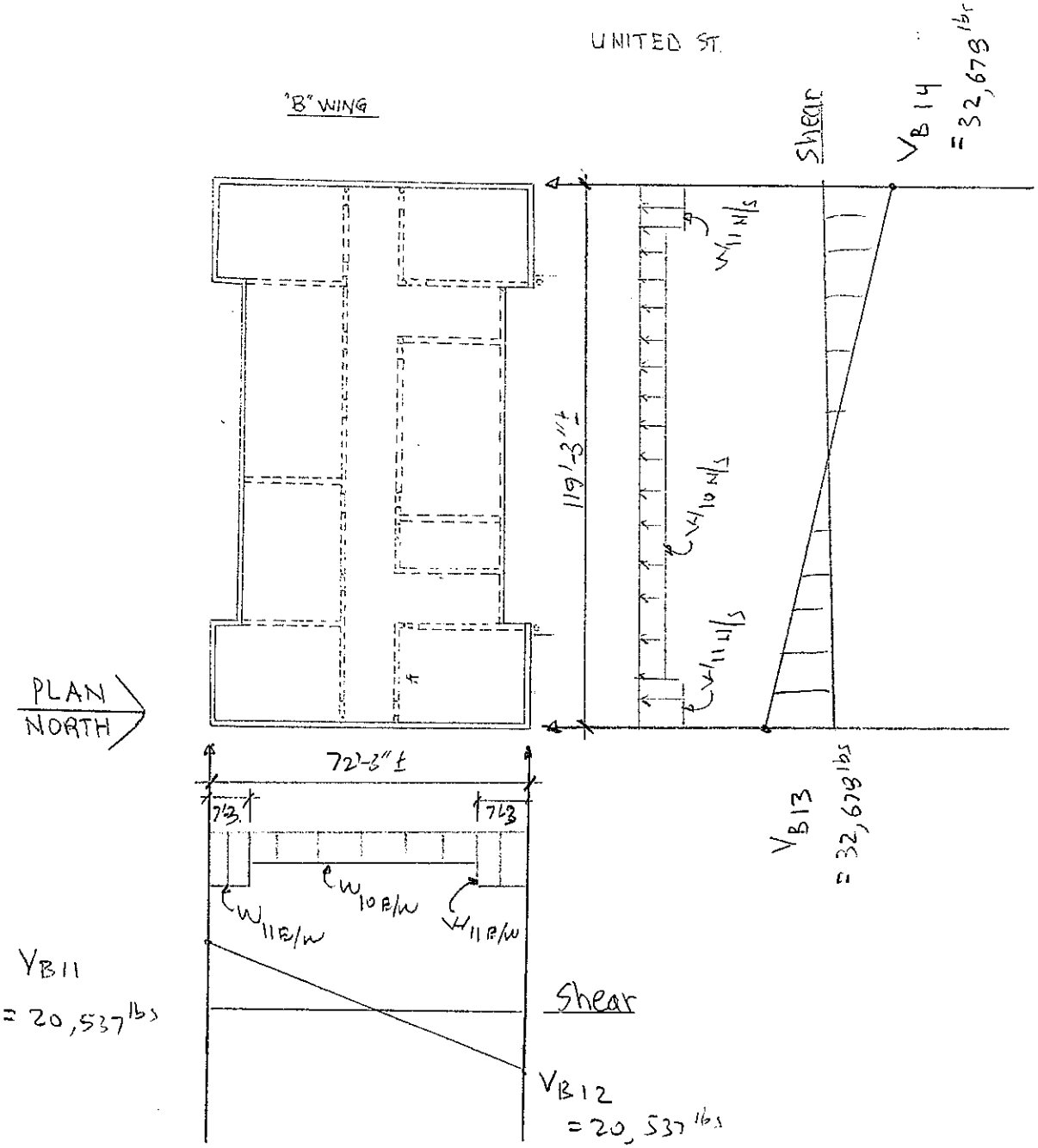

AUDITORIUM AND BUILDING "A" ROOF LEVEL WIND LOADING: LATERAL

UNITED ST.

"A" WING

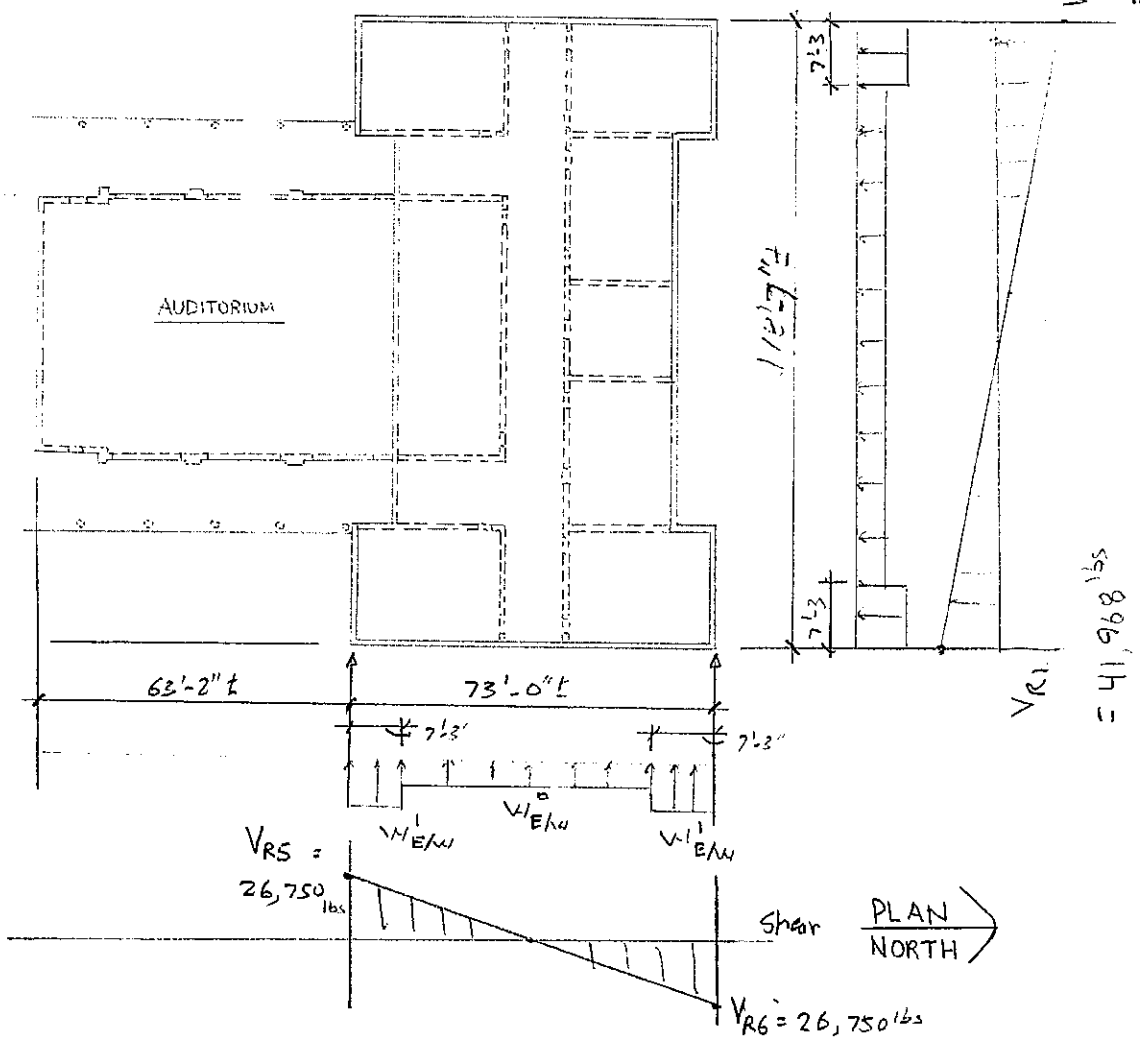

AUDITORIUM AND
BUILDING "A" 2nd FLOOR
WIND LOADING: LATERAL

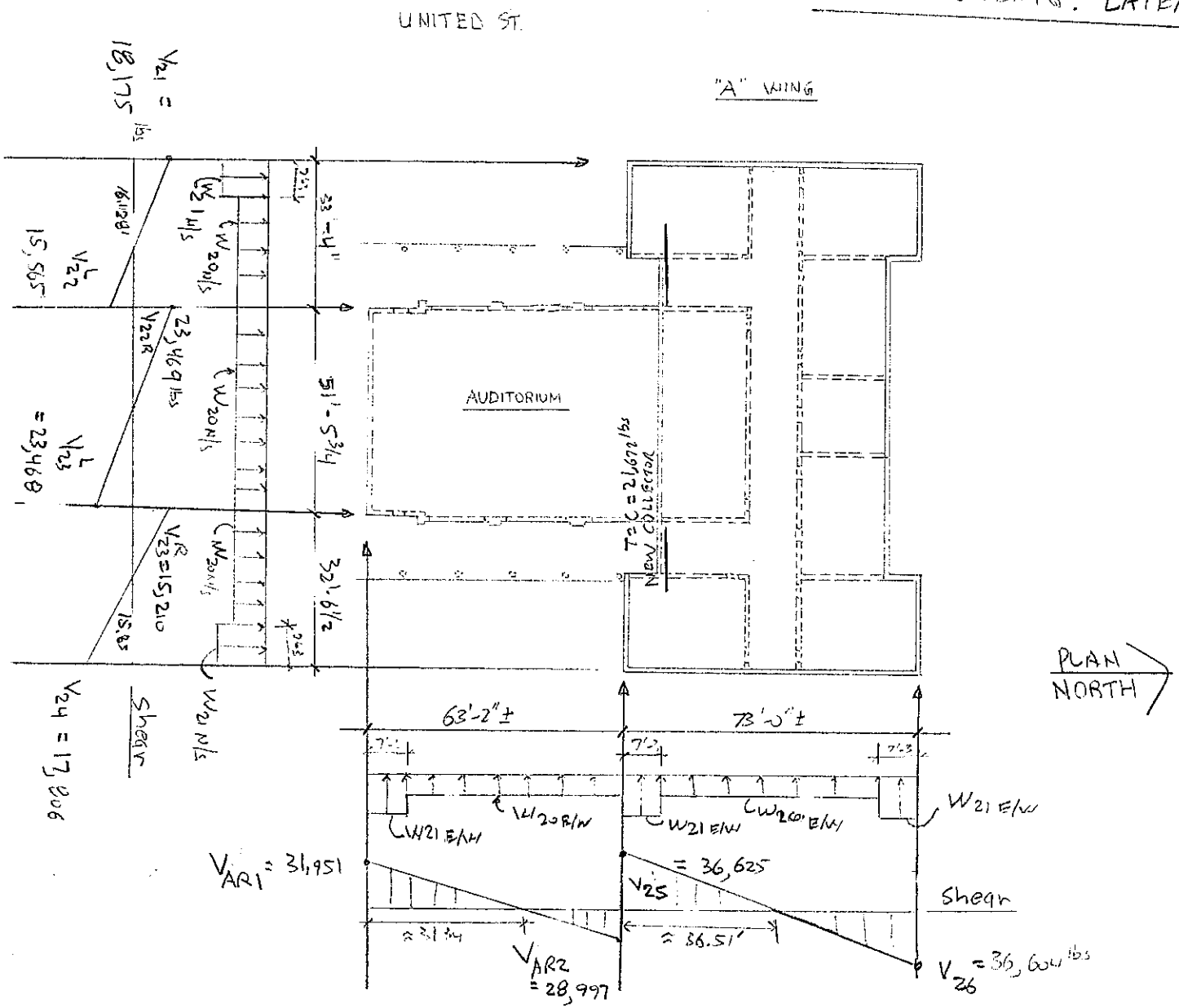

AUDITORIUM AND
BUILDING "A" FIRST FLOOR
WIND LOADING: LATERAL

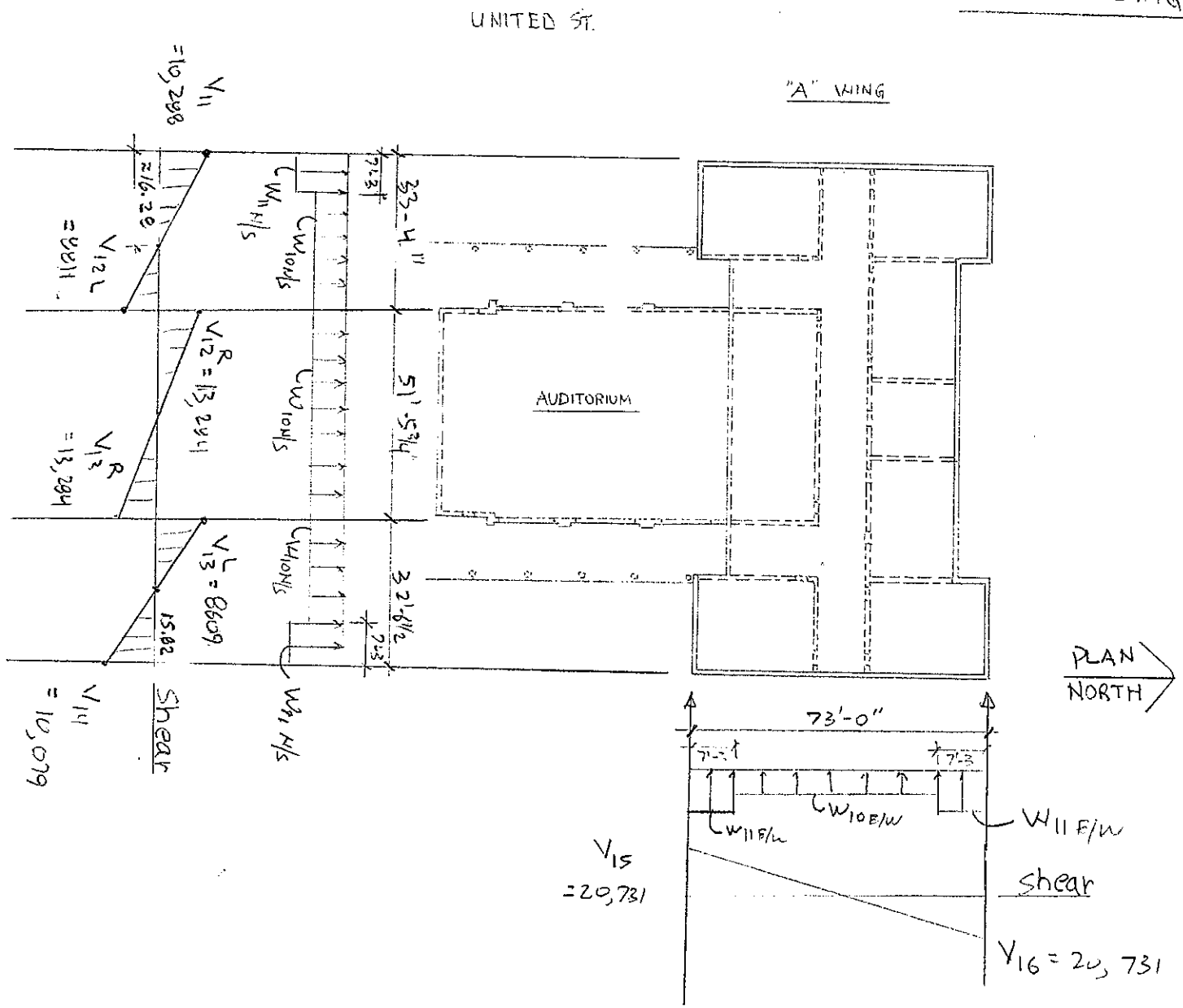

Glynn Archer School — Key West, Florida

Building B

Roof Level Diaphragm Design

	Diaphragm Shear	Diaphragm Length	Diaphragm Shear (Ultimate)	Convert to Ultimate to ASD Load	Diaphragm Shear (ASD)	Existing Allowable Diaphrgam Shear	Shear at Zero Diaphragm Span	Location of Reinforcement.
	(lbs)	(ft)	(PLF)		PLF	(PLF)	(ft)	(ft)
V_{BR1}	26597	42.62	624.05	0.60	374.43	150	36.23	21.72
V_{BR2L}	24406	42.62	572.64	0.60	343.59	150	36.60	20.62
V_{B3R}	42206	71.50	590.29	0.60	354.18	150	59.63	34.37
V_{BR4}	42206	71.51	590.21	0.60	354.13	150	59.63	34.37
						Straight lumber Sheathing		Negative Value = No Reinf.

2nd Level Diaphragm Design

	Diaphragm Shear	Diaphragm Length	Diaphragm Shear (Ultimate)	Convert to Ultimate to ASD Load	Diaphragm Shear (ASD)	Existing Allowable Diaphrgam Shear	Shear at Zero Diaphragm Span	Location of Reinforcement.
	(lbs)	(ft)	(PLF)		(PLF)	(PLF)	(ft)	(ft)
V_{B21}	36283	42.62	851.31	0.60	510.79	300	36.23	14.95
V_{B22}	36283	42.62	851.31	0.60	510.79	300	36.60	15.10
V_{B23}	57732	71.50	807.44	0.60	484.46	300	59.63	22.70
V_{B24}	57732	71.51	807.33	0.60	484.40	300	59.63	22.70
						Straight lumber Sheathing		Negative Value = No Reinf.

First Level Diaphragm Design

	Diaphragm Shear	Diaphragm Length	Diaphragm Shear (Ultimate)	Convert to Ultimate to ASD Load	Diaphragm Shear (ASD)	Existing Allowable Diaphrgam Shear	Shear at Zero Diaphragm Span	Location of Reinforcement.
	(lbs)	(ft)	(PLF)		(PLF)	(PLF)	(ft)	(ft)
V_{B11}	20537	42.62	481.86	0.60	289.12	300	36.23	-1.36
V_{B12}	20537	42.62	481.86	0.60	289.12	300	36.60	-1.38
V_{B13}	32678	71.50	457.03	0.60	274.22	300	59.63	-5.61
V_{B14}	32678	71.51	456.97	0.60	274.18	300	59.63	-5.61
						Straight lumber Sheathing		Negative Value = No Reinf.

Glynn Archer School — Key West, Florida

Building A and Auditorium

Roof Level Diaphragm Design

	Diaphragm Shear	Diaphragm Length	Diaphragm Shear (Ultimate)	Convert to Ultimate to ASD Load	Diaphragm Shear (ASD)	Existing Allowable Diaphrgam Shear	Shear at Zero Diaphragm Span	Location of Reinforcement.	
	(lbs)	(ft)	(PLF)		PLF	(PLF)	(ft)	(ft)	
V_{R1}	41968	71.67	585.57	0.60	351.34	150	59.63	34.17	
V_{R4}	41968	71.67	585.57	0.60	351.34	150	59.63	34.17	
V_{R5}	26750	42.63	627.49	0.60	376.50	150	36.60	22.02	
V_{R6}	26750	42.63	627.49	0.60	376.50	150	36.60	22.02	
						Straight lumber Sheathing		Negative Value = No Reinf.	

2nd Level Diaphragm Design

	Diaphragm Shear	Diaphragm Length	Diaphragm Shear (Ultimate)	Convert to Ultimate to ASD Load	Diaphragm Shear (ASD)	Existing Allowable Diaphrgam Shear *	Shear at Zero Diaphragm Span	Location of Reinforcement.	Collector Force (ASD)
	(lbs)	(ft)	(PLF)		(PLF)	(PLF)	(ft)	(ft)	(lbs)
V_{21}	18175	71.67	253.59	0.60	152.16	300	16.28	-15.82	
V_{22L}	15565	55.25	281.72	0.60	169.03	300	17.05	-13.21	
V_{22R}	23469	126.00	186.26	0.60	111.76	300	25.73	-43.34	6174.582
V_{23L}	23468	126.00	186.25	0.60	111.75	300	25.73	-43.34	6174.319
V_{23R}	15210	55.25	275.29	0.60	165.18	300	15.85	-12.94	
V_{24}	17806	71.67	248.44	0.60	149.07	300	16.69	-16.90	
V_{AR1}	31951	51.48	620.66	0.60	372.40	300	31.59	6.14	
V_{AR2}	28997	51.48	563.27	0.60	337.96	300	31.59	3.55	
V_{25}	36625	42.63	859.14	0.60	515.48	300	36.50	15.26	34215.69
V_{26}	36604	42.63	858.64	0.60	515.19	300	36.50	15.25	
						Daigonal lumber Sheathing		Negative Value = No Reinf.	

First Level Diaphragm Design

	Diaphragm Shear	Diaphragm Length	Diaphragm Shear (Ultimate)	Convert to Ultimate to ASD Load	Diaphragm Shear (ASD)	Existing Allowable Diaphrgam Shear	Shear at Zero Diaphragm Span	Location of Reinforcement.	Collector Force (ASD)
	(lbs)	(ft)	(PLF)		(PLF)	(PLF)	(ft)	(ft)	(lbs)
V_{11}	10288	71.67	143.55	0.60	86.13	150	16.28	-12.07	
V_{12L}	8811	55.25	159.48	0.60	95.69	150	17.05	-9.68	
V_{12R}	13284	126.00	105.43	0.60	63.26	150	25.74	-35.30	3494.957
V_{13L}	13284	126.00	105.43	0.60	63.26	150	25.74	-35.30	3494.957
V_{13R}	8069	55.25	146.05	0.60	87.63	150	15.82	-11.26	
V_{14}	10079	71.67	140.63	0.60	84.38	150	16.72	-13.00	
V_{15}	20731	42.63	486.30	0.60	291.78	150	36.50	17.74	
V_{16}	20731	42.63	486.30	0.60	291.78	150	36.50	17.74	
						Straight lumber Sheathing		Negative Value = No Reinf.	

	Glynn Archer School								
Design Wind Load: Components & Cladding			ASCE 7-10 Chapter - 30, Part 2: Low-Ruse Buildings (Simplified)					Date:	6-Aug-12
	Zone	Effective Wind Area (sf)	Basic Wind Speed: 200 mph		Adjustment Factor (λ)for building height & Exposure C		Topographic Factor	Wind Pressure (psf)	
			P_{net30} (psf)	P_{net30} (psf)	Mean Roof Height (ft)	λ	K_{zt}	Postive P_{net}	Negative P_{net}
Roof 0 to 7 degrees	1	10.00	29.30	-72.00	30.00	1.40	1.00	**41.02**	**-100.80**
	1	20.00	27.40	-70.10	30.00	1.40	1.00	**38.36**	**-98.14**
	1	50.00	25.00	-67.70	30.00	1.40	1.00	**35.00**	**-94.78**
	1	100.00	23.20	-65.90	30.00	1.40	1.00	**32.48**	**-92.26** ← -95.45 psf
	2	10.00	29.30	-120.70	30.00	1.40	1.00	**41.02**	**-168.98**
	2	20.00	27.40	-107.90	30.00	1.40	1.00	**38.36**	**-151.06**
	2	50.00	25.00	-90.90	30.00	1.40	1.00	**35.00**	**-127.26** ← -131.86 psf
	2	100.00	23.20	-78.10	30.00	1.40	1.00	**32.48**	**-109.34**
	3	10.00	29.30	-181.70	30.00	1.40	1.00	**41.02**	**-254.38**
	3	20.00	27.40	-150.50	30.00	1.40	1.00	**38.36**	**-210.70**
	3	50.00	25.00	-109.30	30.00	1.40	1.00	**35.00**	**-153.02**
	3	100.00	23.20	-78.10	30.00	1.40	1.00	**32.48**	**-109.34**
Wall	4	10.00	72.00	-78.10	30.00	1.40	1.00	**100.80**	**-109.34**
	4	20.00	68.70	-74.80	30.00	1.40	1.00	**96.18**	**-104.72**
	4	50.00	64.40	-70.50	30.00	1.40	1.00	**90.16**	**-98.70**
	4	100.00	61.20	-67.30	30.00	1.40	1.00	**85.68**	**-94.22**
	4	500.00	53.70	-59.80	30.00	1.40	1.00	**75.18**	**-83.72**
	5	10.00	72.00	-96.30	30.00	1.40	1.00	**100.80**	**-134.82**
	5	20.00	68.70	-89.90	30.00	1.40	1.00	**96.18**	**-125.86**
	5	50.00	64.40	-81.30	30.00	1.40	1.00	**90.16**	**-113.82**
	5	100.00	61.20	-74.80	30.00	1.40	1.00	**85.68**	**-104.72**
	5	500.00	53.70	-59.80	30.00	1.40	1.00	**75.18**	**-83.72**
Roof Overhang with Roof Slope 0 to 7 degrees	2	10.00	0.00	-103.70	30.00	1.40	1.00	**0.00**	**-145.18**
	2	20.00	0.00	-101.80	30.00	1.40	1.00	**0.00**	**-142.52**
	2	50.00	0.00	-99.40	30.00	1.40	1.00	**0.00**	**-139.16**
	2	100.00	0.00	-97.60	30.00	1.40	1.00	**0.00**	**-136.64**
	3	10.00	0.00	-170.70	30.00	1.40	1.00	**0.00**	**-238.98**
	3	20.00	0.00	-134.00	30.00	1.40	1.00	**0.00**	**-187.60**
	3	50.00	0.00	-85.50	30.00	1.40	1.00	**0.00**	**-119.70**
	3	100.00	0.00	-48.80	30.00	1.40	1.00	**0.00**	**-68.32**

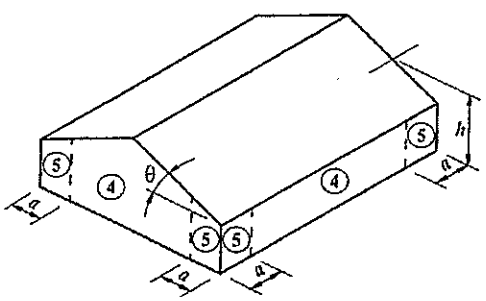

WALL ELEVATION

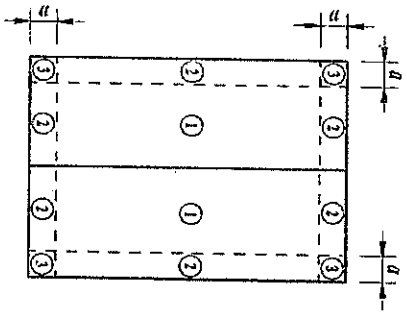

ROOF PLAN

$P_{net} = \lambda K_{zt} P_{net30}$

a=7.25 ft
h= 30.0 ft

	Glynn Archer School								
Design Wind Load: Components & Cladding			ASCE 7-10 Chapter - 30, Part 2: Low-Ruse Buildings (Simplified)					Date:	16-Aug-12
	Zone	Effective Wind Area (sf)	Basic Wind Speed: 180 mph		Adjustment Factor (λ)for building height & Exposure C		Topographic Factor	Wind Pressure (psf)	
			P_{net30} (psf)	P_{net30} (psf)	Mean Roof Height (ft)	λ	K_{zt}	Postive P_{net}	Negative P_{net}
Roof 0 to 7 degrees	1	10.00	23.70	-56.30	30.00	1.40	1.00	**33.18**	**-78.82**
	1	20.00	22.20	-56.80	30.00	1.40	1.00	**31.08**	**-79.52**
	1	50.00	20.30	-54.80	30.00	1.40	1.00	**28.42**	**-76.72**
	1	100.00	18.80	-53.30	30.00	1.40	1.00	**26.32**	**-74.62**
	2	10.00	23.70	-97.80	30.00	1.40	1.00	**33.18**	**-136.92**
	2	20.00	22.20	-87.40	30.00	1.40	1.00	**31.08**	**-122.36**
	2	50.00	20.30	-73.60	30.00	1.40	1.00	**28.42**	**-103.04**
	2	100.00	18.80	-63.20	30.00	1.40	1.00	**26.32**	**-88.48**
	3	10.00	23.70	-147.20	30.00	1.40	1.00	**33.18**	**-206.08**
	3	20.00	22.20	-121.90	30.00	1.40	1.00	**31.08**	**-170.66**
	3	50.00	20.30	-88.50	30.00	1.40	1.00	**28.42**	**-123.90**
	3	100.00	18.80	-63.20	30.00	1.40	1.00	**26.32**	**-88.48**
Wall	4	10.00	58.30	-63.20	30.00	1.40	1.00	**81.62**	**-88.48**
	4	20.00	55.70	-60.60	30.00	1.40	1.00	**77.98**	**-84.84**
	4	50.00	52.20	-57.10	30.00	1.40	1.00	**73.08**	**-79.94**
	4	100.00	49.60	-54.50	30.00	1.40	1.00	**69.44**	**-76.30**
	4	500.00	43.50	-48.40	30.00	1.40	1.00	**60.90**	**-67.76**
	5	10.00	58.30	-78.00	30.00	1.40	1.00	**81.62**	**-109.20**
	5	20.00	55.70	-42.80	30.00	1.40	1.00	**77.98**	**-59.92**
	5	50.00	52.20	-65.80	30.00	1.40	1.00	**73.08**	**-92.12**
	5	100.00	49.60	-60.60	30.00	1.40	1.00	**69.44**	**-84.84**
	5	500.00	43.50	-48.40	30.00	1.40	1.00	**60.90**	**-67.76**
Roof Overhang with Roof Slope 0 to 7 degrees	2	10.00	0.00	-84.00	30.00	1.40	1.00	**0.00**	**-117.60**
	2	20.00	0.00	-82.50	30.00	1.40	1.00	**0.00**	**-115.50**
	2	50.00	0.00	-80.50	30.00	1.40	1.00	**0.00**	**-112.70**
	2	100.00	0.00	-79.00	30.00	1.40	1.00	**0.00**	**-110.60**
	3	10.00	0.00	-138.30	30.00	1.40	1.00	**0.00**	**-193.62**
	3	20.00	0.00	-108.60	30.00	1.40	1.00	**0.00**	**-152.04**
	3	50.00	0.00	-69.30	30.00	1.40	1.00	**0.00**	**-97.02**
	3	100.00	0.00	-39.50	30.00	1.40	1.00	**0.00**	**-55.30**

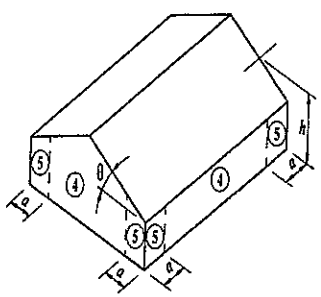

WALL ELEVATION

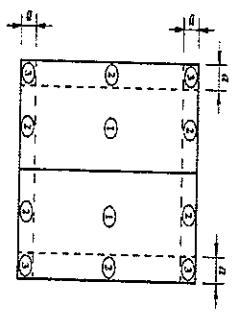

ROOF PLAN

$P_{net} = \lambda K_{zt} P_{net30}$

a=7.25 ft
h= 30.0 ft

Halcrow Yolles

Project: Given Archer [illegible]				Project No.	No.
Design: ACC	Drawn:	Checked:	Date:	W.P. No.	Scale
Subject: BUILDINGS A AND B: CONCRETE WALL ANCHORAGE				Reference	

Determine anchorage of concrete wall to resist wind loads:

1.) NON-CORNER AREA WALL:

Wind load $W = -94.22$ psf

$W = 0.6(-94.22\text{ psf}) = -56.532$ psf

$W = -56.532$ PLF/ft width.

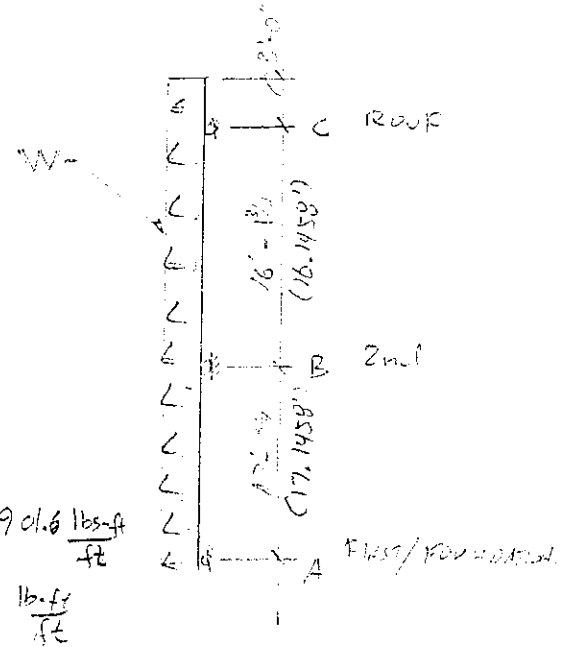

Reaction $A = -373.7$ lbs/ft
$B = -1154.0$ lbs/ft
$C = -524.0$ lbs/ft

$V_{max} = 595.6$ lbs/ft @ B.

M_{max} support @ B $= +1901.6 \frac{\text{lbs-ft}}{\text{ft}}$

Moment BTWN A & B $= -856 \frac{\text{lb-ft}}{\text{ft}}$

Moment BTWN B & C $= -1235.4 \frac{\text{lb-ft}}{\text{ft}}$

2.) CORNER AREA WALL:

Wind load $W = -104.72$ psf

$W = 0.6(-104.72)\text{psf} = -62.832$ psf

$W = -62.832$ PLF/ft width

Reaction: $A = -415.4$ lbs/ft
$B = -1282.5$ lbs/ft
$C = -582.3$ lbs/ft

$V_{max} = 661.9 \frac{\text{lbs}}{\text{ft}}$ @ B.

M_{max} @ B. Support $= +2113.5$ lbs-ft/ft

Moment interior BTWN A & B $= -951.2$ lbs-ft/ft

M_{max} BTWN B & C $= -1373.1$ lbs-ft/ft

Halcrow Yolles

Project:				Project No.	No.
Design:	Drawn:	Checked:	Date:	W.P. No.	Scale
Subject: BUILDINGS A AND B				Reference	

ANCHORAGE OF CONCRETE WALL

2a.) CORNER AREA WALL @ ROOF LEVEL

$P = -415.4$ lbs/ft $\times 2' = 830.9$ lbs

USE SAME ANCHORAGE AS (1a.)
WITH SPACING AT 2'-0" FOR 4 JOISTS parallel closest to the wall.

2b) CORNER AREA WALL @ 2nd FLOOR:

$P = -1282.5$ lbs/ft $\times 2' = 2565$ lbs @ BLDG B.

$P = -1282.5$ lbs/ft $\times 2.667 = 3428$ lbs @ BLDG A

$< T_{all} = 4455$ lbs ANCHORAGE

$< T_{all} = 3940$ lbs ET-EPOXY

O.K.

- Use same anchorage as (1b) with spacing at 2'-0" o.c for BLDG B
- Use same anchorage as (1b) with spacing at 2'-8" O.C. for BLDG A

Halcrow Yolles

Project:				Project No.	No.
Design:	Drawn:	Checked:	Date:	W.P. No.	Scale
Subject: BUILDINGS A AND B				Reference	

ANCHORAGE OF CONCRETE WALL:

1.a) NON-CORNER AREA WALL @ ROOF LEVEL:

P = -373.7 lbs/ft × 2 = -747.40 lbs @ 2'-0" O.C.

P = -373.7 lbs/ft × 4 = -1494.8 lbs @ 4'-0" O.C

BLDG A & B:
Use SIMPSON STRONG-TIE
LTT20B w/ 10-10d to WOOD
AND 1/2"Φ THREAD ROD @ 4'-0" O.C.
IN SIMPSON ET EPOXY
EMBED 4¼ INTO CONCRE
BEYOND JOIST POCKET DEPTH.

1/2"Φ RODS IN ET EPOXY T_{allow} = 3840 lbs > P = -1494.8 lbs OK

SIMPSON LTT20B ANCHOR T_{allow} = 1500 lbs > P = -1494.8 lbs OK

1b) NON-CORNER AREA WALL @ 2nd FLOOR:

BLDG B: P = -1154 lbs/ft × 3'-0" = 3462 lbs < T_{allow} = 4455 lbs

- Use HTT4 w/ 18-SD #10 × 1½ SCREWS attach to WOOD JOIST 1¾ × 13".
- EMBED 1/2"Φ THREADED RODS @ 3'-0" O.C. IN SIMPSON ET-EPOXY (EMBED = 4¼" MIN)

BLDG A: P = -1154 lb/ft × 32"/12 = 3077 < T_{allow} = 4455 lbs
USE SAME ANCHORAGE AS BLDG B.

Halcrow Yolles

Project: GLYNN Archer School				Project No.	No.
Design: ALC	Drawn:	Checked:	Date:	W.P. No.	Scale
Subject: Auditorium : CONCRETE WALL ANCHORAGE				Reference	

Determine Anchorage of concrete wall to resist Wind load!

1.) NON-CORNER AREA WALL!

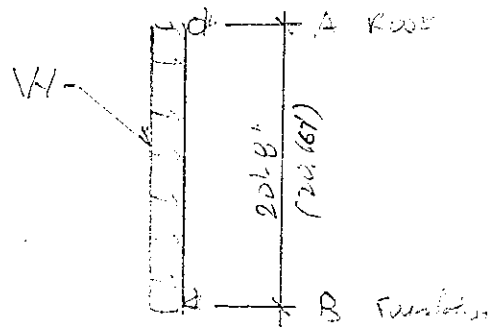

Wind load = -94.22 psf

$W = 0.6(-94.22) = -56.532$ PLF/ft width

REACTION: $A = wL/2 = -584.173$ lbs/ft

$B = -584.173$ PLF/ft width

$M_{max} = wL^2/8 = -3018.3$ lbs-ft/ft width

$V_{max} = 584.173$ lbs/ft width

2.) CORNER AREA WALL

$W = -104.72$ PSF

$W = 0.6(-104.72)$ PSF $= -62.83$ PSF

REACTION: $A = wL^2/2 = -649.27$ lbs/ft width

$B = -647.27$ lbs/ft width

$M_{max} = wL^2/8 = (-62.83)(20.667)^2/8 = 3354.5$ lbs-ft/ft width

$V_{max} = -647.27$ lbs/ft width

SIMPSON Strong-Tie®

LTT/HTT *Tension Ties*

Tension ties offer a solution for resisting tension loads that is fastened with nails. The entire line of tension ties has been tested and evaluated to the requirements of AC155.

The HTT4 and HTT5 are the latest generation of tension ties. They feature an optimized nailing pattern which results in better performance with less deflection. Designed to meet new code standards, the HTT4 and HTT5 offer higher loads than their predecessors.

The LTT19 Light Tension Tie is designed for 2x joists or purlins and the LTT20B is for nail- or bolt-on applications. The 3" nail spacing makes the LTT20B suitable for wood I-joists with 10dx1½. The LTTI31 is designed for wood chord open web truss attachments to concrete or masonry walls and may also be installed vertically on a minimum 2x6 stud.

MATERIAL: See table

FINISH: Galvanized. May be ordered HDG; contact Simpson Strong-Tie.

INSTALLATION: • Use all specified fasteners. See General Notes.

- For use in vertical and horizontal applications.
- To tie multiple 2x members together, the Designer must determine the fasteners required to join members without splitting the wood.
- The Designer shall specify anchor bolt type, length and embedment. See SB and SSTB anchor bolts on pages 36-40.

CODES: See page 20 for Code Reference Key Chart.

For tension ties, per ASTM test standards, anchor bolt nut should be finger-tight plus ⅓ to ½ turn with a hand wrench, with consideration given to possible future wood shrinkage. Care should be taken to not over-torque the nut. Impact wrenches should not be used.

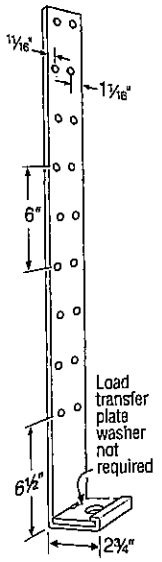

LTTI31

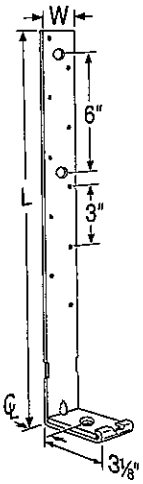

LTT20B
(LTT19 similar)

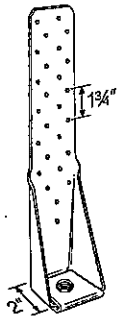

HTT5
(HTT4 similar)
U.S. Patent 5,467,570

These products are available with additional corrosion protection. Additional products on this page may also be available with this option, check with Simpson Strong-Tie for details.

These products are approved for installation with the Strong-Drive SD Structural-Connector screw. See page 30 for the correct substitution and SD screw size.

Model No.	Material (Ga)		Dimensions			Seat Thickness	Fasteners		Allowable Tension Loads (160)		Deflection at Highest Allowable Load	Code Ref.
	Strap	Plate	W	L	℄		Anchor Bolts	Fasteners	DF/SP	SPF/HF		
LTT19[3]	16	3	1¾	19⅛	1⅜	5/16	½, ⅝ or ¾	8-10dx1½	1310	1125	0.180	L19, IP2, F4
								8-10d	1340	1150	0.157	
LTT20B[3]	12	3	2 7/16	19¾	1½	5/16	½, ⅝ or ¾	10-10dx1½	1355	1165	0.195	
								10-10d	1500	1290	0.185	
								2-½" Bolt	1625	1400	0.183	
LTTI31[5]	18	3	3¾	31	1⅜	¼	⅝	18-10dx1½	1350	1160	0.193	
HTT4	11	—	2½	12⅜	1⅜	7/16	⅝	18-10dx1½	3610	3105	0.086	
								18-16dx2½	4235	3640	0.123	
								18-SD #10x1½[9]	4455	3830	0.112	160
HTT5	11	—	2½	16	1⅜	7/16	⅝	26-10dx1½	4350	3740	0.120	L19, IP2, F4
								26-10d	4670	4015	0.116	
								26-16dx2½	5090[6]	4375	0.135	
HTT5KT[7]	11	¼	2½	16	1⅜	7/16	⅝	26-SD #10x2½	5445	5360	0.103	160

1. Allowable loads have been increased for wind or earthquake with no further increase allowed. Reduce where other loads govern.
2. Post design by Specifier. Tabulated loads are based on minimum 3"x3½" post *(in 3½" wall)*. Post may consist of multiple members provided they are connected independently of the holdown fasteners. See pages 210-211 for common post allowable loads.
3. A standard cut washer is required under anchor nut for LTT19 and LTT20B when using ½" or ⅝" anchor bolts. No additional washer is required when using a ¾" anchor bolt.
4. Deflection at Highest Allowable Tension Load includes fastener slip holdown deformation, and anchor bolt elongation for holdowns installed up to 4½" above top of concrete. HTT4 and HTT5 may be installed raised up to 18" above top of concrete with no load reduction provided that additional elongation of the anchor rod is accounted for.
5. If the base of the LTTI31 is installed flush with a concrete or masonry wall, the allowable load is 2285 lbs.
6. Allowable tension load for HTT5 with a bearing plate washer BP5/8-2 *(sold separately)* installed in the seat of the holdown is 5295 for DF/SP and 4555 for SPF/HF.
7. HTT5KT is sold as a kit with the holdown, BP⅝-2 bearing plate washer and 26-SD #10x2½ screws.
8. Structural composite lumber columns have sides that show either the wide face or the edges of the lumber strands/veneers. Values in the tables reflect installation into the wide face. See technical bulletin T-SCLCOLUMN for values on the narrow face (edge) *(see page 215 for details)*.
9. HTT4 with SD #10x1½ screws achieves full load on a single 2x6 stud or joist.
10. **FASTENERS:** 10dx1½ = 0.148 dia. x 1½" long, 10d = 0.148" dia. x 3" long, 16dx2½ = 0.162" dia. x 2½" long, SD #10x2½ = 0.161" dia. x 2½", SD #10x1½ = 0.161" dia. x 1½".

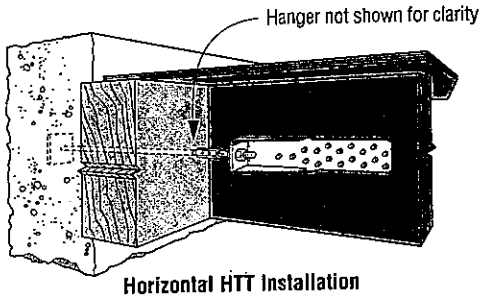

Horizontal HTT Installation

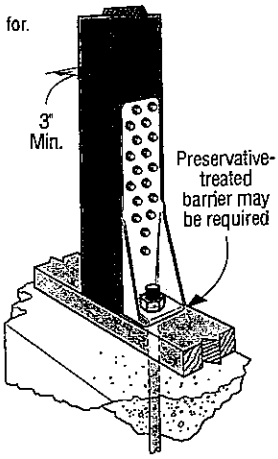

Vertical HTT4 Installation

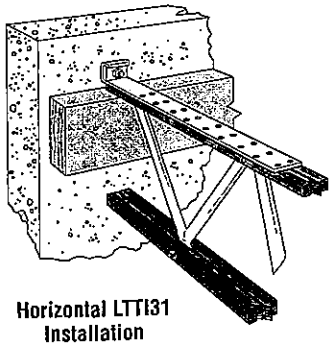

Horizontal LTTI31 Installation

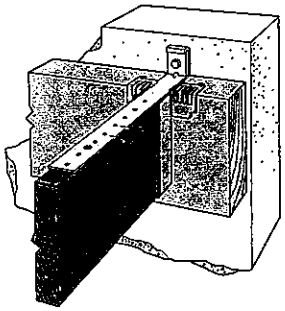

Horizontal LTT19 Installation
(LTT20B similar)

C-2011 ©2011 SIMPSON STRONG-TIE COMPANY INC. PRINTED 12/10

Cure Schedule

Base Material Temperature		Cure Time
°F	°C	
40	4	72 hrs.
60	16	24 hrs.
80	27	24 hrs.
100	38	12 hrs.

In-Service Temperature Sensitivity

Base Material Temperature		Percent Allowable Load
°F	°C	
40	4	100%
70	21	100%
110	43	100%
135	57	85%
150	66	69%
180	82	58%

1. Refer to temperature sensitivity chart for allowable bond strength reduction for temperature. See page 15 for more information.
2. Percent allowable load may be linearly interpolated for intermediate base material temperatures.
3. °C = (°F-32) / 1.8

Tension Loads for Threaded Rod Anchors in Normal-Weight Concrete

Rod Dia. in. (mm)	Drill Bit Dia. in.	Embed. Depth in. (mm)	Critical Edge Dist. in. (mm)	Critical Spacing Dist. in. (mm)	Tension Load Based on Bond Strength			Tension Load Based on Steel Strength		
					f'c ≥ 2000 psi (13.8 MPa) Concrete			A307 (SAE 1018)	A193 GR B7 (SAE 4140)	F593 (A304SS)
					Ultimate lbs. (kN)	Std. Dev. lbs. (kN)	Allowable lbs. (kN)	Allowable lbs. (kN)	Allowable lbs. (kN)	Allowable lbs. (kN)
3/8 (9.5)	1/2	3½ (89)	5¼ (133)	14 (356)	8,777 (39.0)	324 (1.4)	2,195 (9.8)	2,105 (9.4)	4,535 (20.2)	3,630 (16.1)
1/2 (12.7)	5/8	4¼ (108)	6⅜ (162)	17 (432)	15,368 (68.4)	605 (2.7)	3,840 (17.1)	3,750 (16.7)	8,080 (35.9)	6,470 (28.8)
5/8 (15.9)	3/4	5 (127)	7½ (191)	20 (508)	22,877 (101.8)	718 (3.2)	5,720 (25.4)	5,875 (26.1)	12,660 (56.3)	10,120 (45.0)
3/4 (19.1)	7/8	6¾ (171)	10⅛ (257)	27 (686)	35,459 (157.7)	4,940 (22.0)	8,865 (39.4)	8,460 (37.6)	18,230 (81.1)	12,400 (55.2)
7/8 (22.2)	1	7¾ (197)	11⅝ (295)	31 (787)	43,596 (193.9)	1,130 (5.0)	10,900 (48.5)	11,500 (51.2)	24,785 (110.2)	16,860 (75.0)
1 (25.4)	1⅛	9 (229)	13½ (343)	36 (914)	47,333 (210.5)	1,243 (5.5)	11,835 (52.6)	15,025 (66.8)	32,380 (144.0)	22,020 (97.9)
1⅛ (28.6)	1¼	10⅛ (257)	15¼ (387)	40½ (1029)	61,840 (275.1)	•	15,460 (68.8)	19,025 (84.6)	41,000 (182.4)	27,880 (124.0)
1¼ (31.8)	1⅜	11¼ (286)	16⅞ (429)	45 (1143)	78,748 (350.3)	4,738 (21.1)	19,685 (87.6)	23,490 (104.5)	50,620 (225.2)	34,420 (153.1)

*See page 10 for an explanation of the load table icons

1. Allowable load must the lesser of the bond or steel strength.
2. The allowable loads listed under allowabla bond are based on a safety factor of 4.0.
3. Allowable loads may be increased by 33⅓ percent for short-term loading due to wind or seismic forces where permitted by code.
4. Refer to allowable load adjustment factors for spacing and edge distance on pages 60 & 61.
5. Refer to In-Service Temperature Sensitivity chart for allowable load adjustment for temperature.
6. Anchors are permitted to be used within fire-resistive construction, provided the anchors resist wind or seismic loads only. For use in fire-resistive construction, the anchors can also be permitted to be used to resist gravity loads, provided special consideration has been given to fire exposure conditions.
7. Anchors are not permitted to resist tension forces in overhead or wall installations unless proper consideration is given to fire exposure and elevated temperature conditions.

2306.3.4 Single diagonally sheathed lumber diaphragms. Single diagonally sheathed lumber diaphragms shall be constructed of minimum 1-inch (25 mm) thick nominal sheathing boards laid at an angle of approximately 45 degrees (0.78 rad) to the supports. The shear capacity for single diagonally sheathed lumber diaphragms of southern pine or Douglas fir-larch shall not exceed 300 plf (4378 N/m) of width. The shear capacities shall be adjusted by reduction factors of 0.82 for framing members of species with a specific gravity equal to or greater than 0.42 but less than 0.49 and 0.65 for species with a specific gravity of less than 0.42, as contained in the NDS.

2306.3.4.1 End joints. End joints in adjacent boards shall be separated by at least one stud or joist space and there shall be at least two boards between joints on the same support.

2306.3.4.2 Single diagonally sheathed lumber diaphragms. Single diagonally sheathed lumber diaphragms made up of 2-inch (51 mm) nominal diagonal lumber sheathing fastened with 16d nails shall be designed with the same shear capacities as shear panels using 1-inch (25 mm) boards fastened with 8d nails, provided there are not splices in adjacent boards on the same support and the supports are not less than 4 inch (102 mm) nominal depth or 3 inch (76 mm) nominal thickness.

2306.3.5 Double diagonally sheathed lumber diaphragms. Double diagonally sheathed lumber diaphragms shall be constructed of two layers of diagonal sheathing boards at 90 degrees (1.57 rad) to each other on the same face of the supporting members. Each chord shall be considered as a beam with uniform load per foot equal to 50 percent of the unit shear due to diaphragm action. The load shall be assumed as acting normal to the chord in the plan of the diaphragm in either direction. The span of the chord or portion thereof shall be the distance between framing members of the diaphragm, such as the joists, studs and blocking that serve to transfer the assumed load to the sheathing. The shear capacity of double diagonally sheathed diaphragms of Southern pine or Douglas fir-larch shall not exceed 600 plf (8756 kN/m) of width. The shear capacity shall be adjusted by reduction factors of 0.82 for framing members of species with a specific gravity equal to or greater than 0.42 but less than 0.49 and 0.65 for species with a specific gravity of less than 0.42, as contained in the NDS. Nailing of diagonally sheathed lumber diaphragms shall be in accordance with Table 2306.3.3.

2306.3.6 Gypsum board diaphragm ceilings. Gypsum board diaphragm ceilings shall be in accordance with Section 2508.5.

2306.4 Shear walls. Panel sheathing joints in shear walls shall occur over studs or blocking. Adjacent panel sheathing joints shall occur over and be nailed to common framing members (see Section 2305.3.1 for limitations on shear wall bracing materials).

2306.4.1 Wood structural panel shear walls. The allowable shear capacities for wood structural panel shear walls shall be in accordance with Table 2306.4.1. These

Truss AU-1

Truss member checking

Halcrow
A CH2M HILL COMPANY

		SHEET NO		OF	
PROJECT	Glynn Archer School, Florida	JOB NO			
SUBJECT	Roof Truss Evaluation	MADE BY	YB	DATE	16-Aug-12
	Summary of Truss Member checking	CHKD BY		DATE	

Truss AU-1

Gravity Loads

Member #	Cross section			Governing Loads	Conclusion
	b (in)	h (in)	A (sqi)		
1	1.50	7.50	11.25	Bending and Compression	ng
4	1.50	3.50	5.25	Tension	ok
5	1.50	3.50	5.25	Compression	ng

Uplift Loads

Member #	Cross section			Governing Loads	Conclusion
	b (in)	h (in)	A (sqi)		
1	1.50	7.50	11.25	Bending and Tension	ng
4	1.50	3.50	5.25	Compression	ng
5	1.50	3.50	5.25	Tension	ok

Truss AU-1

Gravity Loads

Software licensed to Halcrow	Job No 1	Sheet No 1	Rev
	Part ROOF TRUSS AU-1		
Job Title ROOF TRUSS AU-1	Ref 1		
	By YB	Date 08/11/12	Chd
Client	File 1 - Truss AU - 1.std	Date/Time 14-Aug-2012 10:51	

AU-1

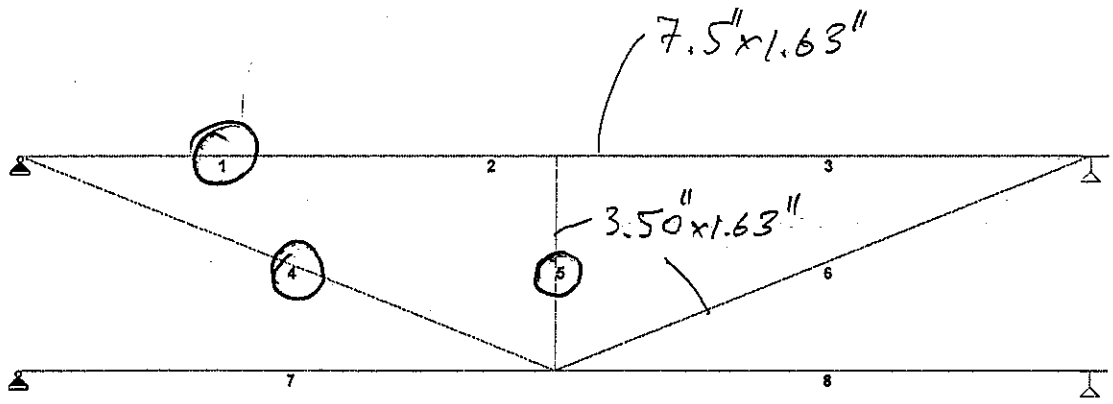

Y
Z X

Load 101

Software licensed to Halcrow	Job No 1	Sheet No 1	Rev
	Part ROOF TRUSS AU-1		
Job Title ROOF TRUSS AU-1	Ref 1		
	By YB	Date 08/11/12	Chd
Client	File 1 - Truss AU - 1.std	Date/Time 14-Aug-2012 10:51	

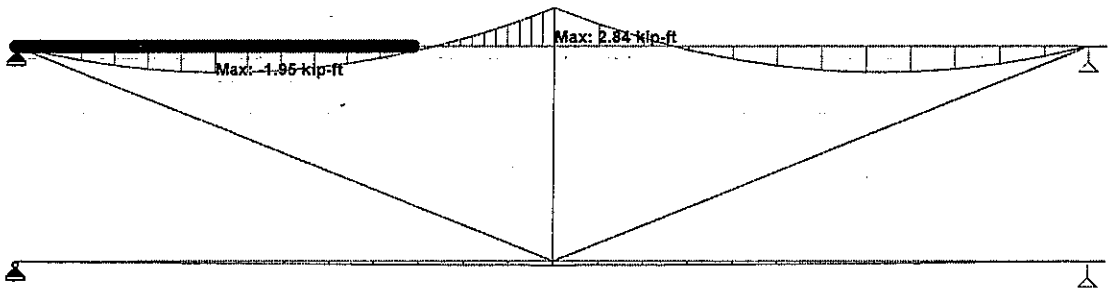

Y
Z X

LC 101

Load 101 : Bending Z
Moment - kip-ft

Software licensed to Halcrow	Job No 1	Sheet No 1	Rev
	Part ROOF TRUSS AU-1		
Job Title ROOF TRUSS AU-1	Ref 1		
	By YB	Date 08/11/12	Chd
Client	File 1 - Truss AU - 1.std	Date/Time 14-Aug-2012 10:51	

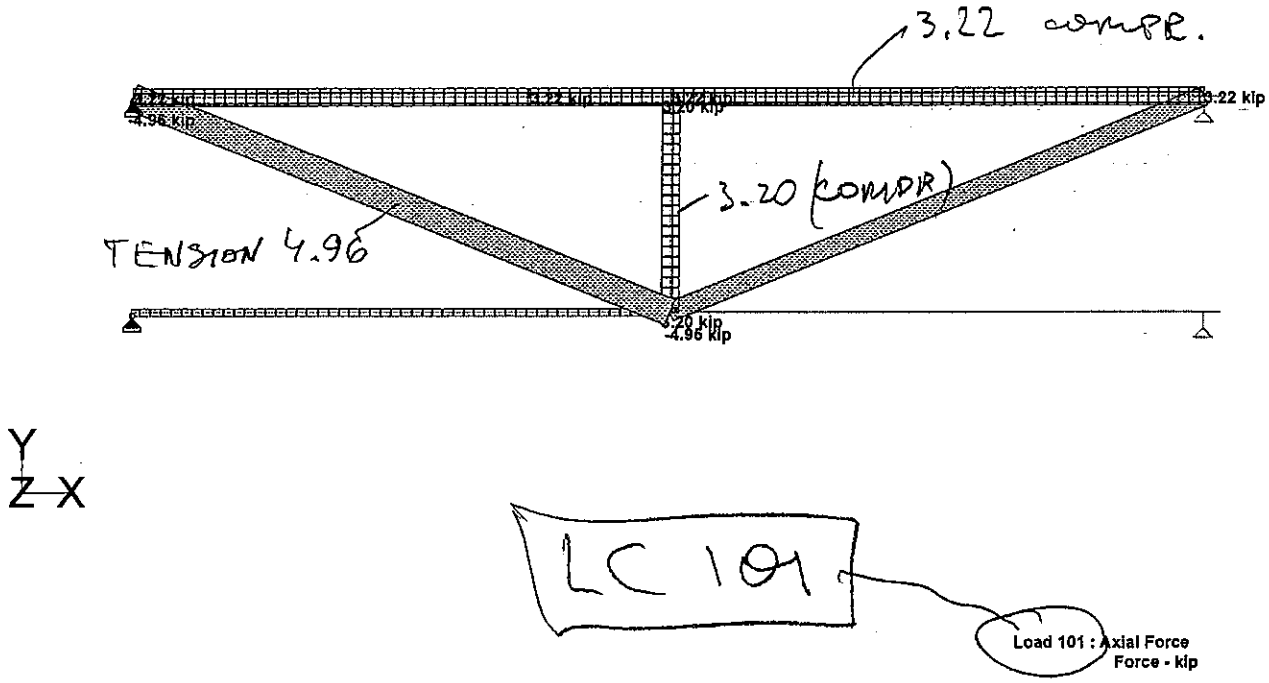

Halcrow
A CH2M HILL COMPANY

PROJECT	Glynn Archer School, Florida	SHEET NO ____ OF ____	
SUBJECT	Roof Truss Structural assessment — Gravity Loads	JOB NO	
	Bending and Compression member — 1 — Truss AU-1	MADE	YB 15-Aug-12
		CHKD	

Bending and Compression member 1

All design procedures will be done according to
*The National Design Specification for Wood Construction (**NDS**)* 2005, (parag. 3.9.2)

Species: Southern Pine, grade No 2
Nominal Sizes: D1 = 8 in
D2 = 2 in
Dressed Sizes: d1 = 7.50 in
b = d2 = 1.50 in
Dressed Sizes: Table 1B, p.14 Supplement
Classification: Visually Graded

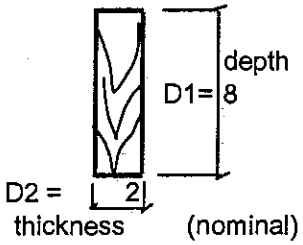

Cross section area **A =** 7.50 × 1.50 = **11.3** sqi

Dimension lumber –
NDS 4.1.3.2

refers to lumber from 2" to 4" (nominal) thick,
and 2" (nominal) or more width

Design values:

"Reference Design Value", Tables 4B, NDS **Supplement**

Fb =	1200	psi	bending
Ft =	650	psi	tension parallel to grain
Fv =	175	psi	shear parallel to grain
Fcp =	565	psi	compression perpendicular to grain
Fc =	1550	psi	compression parallel to grain
E =	1600000	psi	modulus of elasticity
Emin =	580000	psi	modulus of elasticity (min)

Emin' = 580000 psi

Adjustment Factors

(for normal building environmental, see Manual, p. 13)

C_D =	1.60	load duration factor (wind) see Table 2.3.2 p.9
C_F =	1.00	size factor (for Southern Pine already included in tabulated values, see p. 37)
Cr =	1.00	repetitive member factor, p. 28
C_L =		beam stability factor (calculated below)
C_P =		column stability factor (calculated below)

Beam Stability Factor, C_L (see 3.3.3, p.13)

Member unsupported length Lu = 2.0 ft = 24 in d1 = 7.50 in

Lu/d1 = 24 / 7.50 = 3.2

If **Lu/d1 ≥ 7** Use the following Eq.:

Member effective length: Le = 1.63 × Lu + 3 × d1

Le = 1.63 × 24 + 3 × 7.50 = 61.6 in

If **Lu/d1 < 7** Use the following Eq.:

Le = 2.06 × Lu = 2.06 × 24 = 49 in

Use: Le = 49 in

Slenderness ratio: $R_B = \sqrt{Le \times d1 / b^2} = \sqrt{62 \times 7.50 / 2.25} = 14.3$

R_B = 14.3 < 50 **ok!**

$(R_B)^2$ = 205

Fb* — reference bending design value multiplied by all adjustment factors, except C_L

Fb* = Fb × C_D × C_F × Cr =

= 1200 × 1.60 × 1.00 × 1.00 = **1920** psi

F_{bE} = 1.20 × Emin' / R_B^2 = 1.20 × 580000 / 205 = 3389

a = F_{bE} / Fb* = 3389 / 1920 = 1.76

b = (1 + a) / 1.9 = (1 + 1.76) / 1.9 = 1.46

$C_L = b - \sqrt{b^2 - a / 0.95}$ =

C_L = $1.46 - \sqrt{2.12 - 1.76 / 0.95}$ = **0.95**

Fb' = Fb* × C_L = 1920 × 0.95 = **1815** psi

Column stability factor Cp

(see 3.7 - p.19)

F*c — reference compression design value multiplied by all adjustment factors, except **Cp**

$F^*c = Fc \times C_D \times C_F$

$F^*c = 1550 \times 1.60 \times 1.00 = \mathbf{2480}$ psi

Unbraced length of the compressed member L = 24 in (defined above)

(pinned - pinned) Ke = 1.00 effective length coefficient, See Appendix G, p.156

$Le = Ke \times L = 1.00 \times 24 = 24$ in

Re - the slenderness ratio, for columns with rectangular cross section shall be taken as the larger of the ratios Lx/d1 or Lz/d2

$Re = Le / d2 = 24 / 1.50 = 16.0 < 50$ **ok!**

$\boxed{F^*c = \mathbf{2480}}$ psi (see calculations above)

$$F_{cE} = \frac{K \times Emin'}{(Re)^2} = \frac{0.822 \times 580000}{16.0 \times 16.0} = 1862$$

$k1 = F_{cE} / F^*c = 1862 / 2480 = 0.75$

c = 0.80 — for sawn lumber

$$k2 = \frac{1 + k1}{2c} = \frac{1 + 0.75}{2 \times 0.80} = 1.09$$

$k3 = k2 \wedge 2 = 1.09 \times 1.09 = 1.20$

$$Cp = k2 - \sqrt{k3 - k1 / c}$$

$$\mathbf{Cp} = 1.09 - \sqrt{1.20 - 0.75 / 0.80} = \mathbf{0.586}$$

Corrected value **Fc' =** 2480 × 0.586 = **1452** psi

Check Stresses

a) Bending (bending load applied to narrow face of member)

Bending Moment in member $M = 1.95$ k-ft $= 23400$ p - in (see STAAD)

Modulus of inertia $I = \frac{d2 \times d1^3}{12} = \frac{1.50 \times 7.50 \times 7.50 \times 7.50}{12} =$ **53** in^4

Section modulus $S = \frac{d2 \times d1^2}{6} = \frac{1.50 \times 7.50 \times 7.50}{6} =$ **14.1** in^3

Actual bending Stress $f_{b1} = M / S = 23400 / 14.1 = 1664$ psi

$f_{b1} < F_{bE} = 1.20 \times Emin' / (R_B)^2$

$F_{bE} = 1.20 \times 580000 / 205 = 3389$ psi

Use: $f_{b1} = 1664$ psi

b) Compression

Compression in member $P = 3.22$ k $= 3220$ lb (see STAAD)

Actual compression Stress $fc = P / A = 3220 / 11.3 =$ **286** psi

$Le1 = Le = 24$ in $d2 = 1.5$ in

$Le1 / d2 = 24 / 1.5 = 16.0$ $(Le1 / d2)^2 = 256$

$f_c < F_{cE1} = 0.82 \times Emin' / (Le1 / d2)^2$

$F_{cE1} = 0.82 \times 580000 / 256.0 = 1862$ psi

Use: **fc** = 286 psi

Member subjected to a combination of bending and compression shall be proportioned that:

$$\boxed{\left(\frac{fc}{Fc'}\right)^2 + \frac{f_{b1}}{F_{b1}' \left(1 - (fc / F_{cE1})\right)} < 1}$$ (see 3.9.2)

$fc / Fc' = 286 / 1452 = 0.20$ $0.20^2 = 0.04$

$f_{b1} = 1664$ psi

$F_{b1}' = Fb' = 1815$ psi

$(1 - fc / F_{cE1}) = 1 - 286 / 1862 = 0.85$

$$\frac{f_{b1}}{F_{b1}' (1 - fc / F_{cE1})} = \frac{1664}{1815 \times 0.85} = 1.08$$

$0.04 + 1.08 = 1.12$ > 1.00 **ng!**

Tension member 4

All design procedures will be done according to
*The National Design Specification for Wood Construction (**NDS**)* 2005

Species: Southern yellow Pine grade 2
Nominal Sizes: B = 2 in = 0.17 ft
D = 4 in = 0.33 ft
Dressed Sizes: b = 1.50 in
d = 3.50 in
Dressed Sizes: Table 1B, p.14 Supplement
Classification: Visually Graded

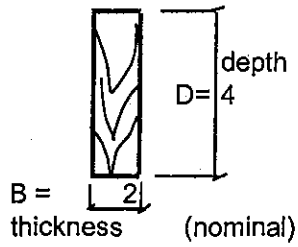

Cross section Area A = 1.50 × 3.50 = **5.3** sqi

Dimension lumber – refers to lumber from 2" to 4" (nominal) thick,
NDS 4.1.3.2 and 2" (nominal) or more width

Design values: "Reference Design Value", Tables 4B, NDS **Supplement**

Ft = 825 psi tension parallel to grain

Adjustment Factors

(for normal building environmental, see Manual, p. 13)

C_D = 1.60 load duration factor (wind) see Table 2.3.2 p.9

C_F = 1.00 size factor (for Southern Pine already included in tabulated values, see p. 37)

Ft' = Ft × C_D × C_F =
= 825 × 1.60 × 1.00 = 1320 psi

The allowable tension force:

T = A × Ft' = 5.3 × 1320 = 6930 lbf = 6.93 kips

Tension force in considered member T = 4.96 k (see STAAD)

T = 6.93 k > 4.96 k **ok!**

Compression member 5

All design procedures will be done according to
*The National Design Specification for Wood Construction (**NDS**)* 2005

Species: Southern Pine, grade 2
Nominal Sizes: D1 = 4.0 in
D2 = 2.0 in
Dressed Sizes: d1 = 3.50 in
d2 = 1.50 in
Dressed Sizes: Table 1B, p.14 Supplement, Section Properties
Classification: Visually Graded

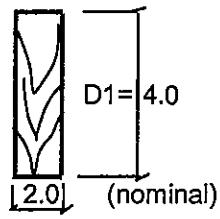

Cross section Area A = 3.50 × 1.50 = **5.25** In^2

Dimension lumber – refers to lumber from 2" to 4" (nominal) thick,
NDS 4.1.3.2 and 2" (nominal) or more width

Design values: "Reference Design Value", Table 4B, NDS **Supplement**

Fc = 1650 psi compression parallel to grain

E = 1600000 psi modulus of elasticity

Emin = 580000 psi modulus of elasticity (min)

Adjustment Factors

(for normal building environmental, see Manual, p. 13)

C_D = 1.60 load duration factor (wind) see Table 2.3.2 p.9

C_F = 1.00 size factor, for Southern Pine already incorporated ! tabulated values (see p. 37)

C_p = column stability factor (calculated below)

F*c - tabulated compression design value multiplied by all adjustment factors, except **Cp**

F*c = Fb × C_D × C_F =

= 1650 × 1.60 × 1.00 = **2640** psi

Emin' = Emin = 580000 psi

Calculation of column stability factor Cp (see 3.7 - p.19)

Unbraced length of the compressed member L = 48 in = 4.00 ft

(pinned - pinned) Ke = 1.00 effective length coefficient, See Appendix G, p.156

Le = Ke × L = 1.00 x 48 = 48 in

Re - the slenderness ratio, for columns with rectangular cross section shall be taken as the larger of the ratios Lx/d1 or Lz/d2

Re = Le / d2 = 48 / 1.50 = 32 < 50 **ok!**

F*c = **2640** psi (see calculations above)

$$F_{cE} = \frac{K \times Emin'}{(Re)^2} = \frac{0.822 \times 580000}{32 \times 32} = 466$$

k1 = F_{cE} / F*c = 466 / 2640 = 0.18

c = 0.80 – for sawn lumber

$$k2 = \frac{1 + k1}{2c} = \frac{1 + 0.18}{2 \times 0.80} = 0.74$$

k3 =k2 ^ 2 = 0.74 × 0.74 = 0.54

$$Cp = k2 - \sqrt{k3 - k1 / c}$$

$$\mathbf{Cp} = 0.74 - \sqrt{0.54 - 0.18 / 0.80} = \mathbf{0.169}$$

Corrected value Fc' = 2640 × 0.169 = **447** psi

Allowable compression force P = A × Fc' = 5.25 × 447 = 2349 p

Compression in considered member P = 3.20 k (see STAAD)

P = 2.35 k < 3.20 k ng!

Truss AU-1

Uplift Loads

Software licensed to Halcrow	Job No 1	Sheet No 1	Rev
	Part ROOF TRUSS AU-1		
Job Title ROOF TRUSS AU-1	Ref 1		
	By YB	Date 08/11/12	Chd
Client	File 1 - Truss AU - 1.std	Date/Time 14-Aug-2012 10:51	

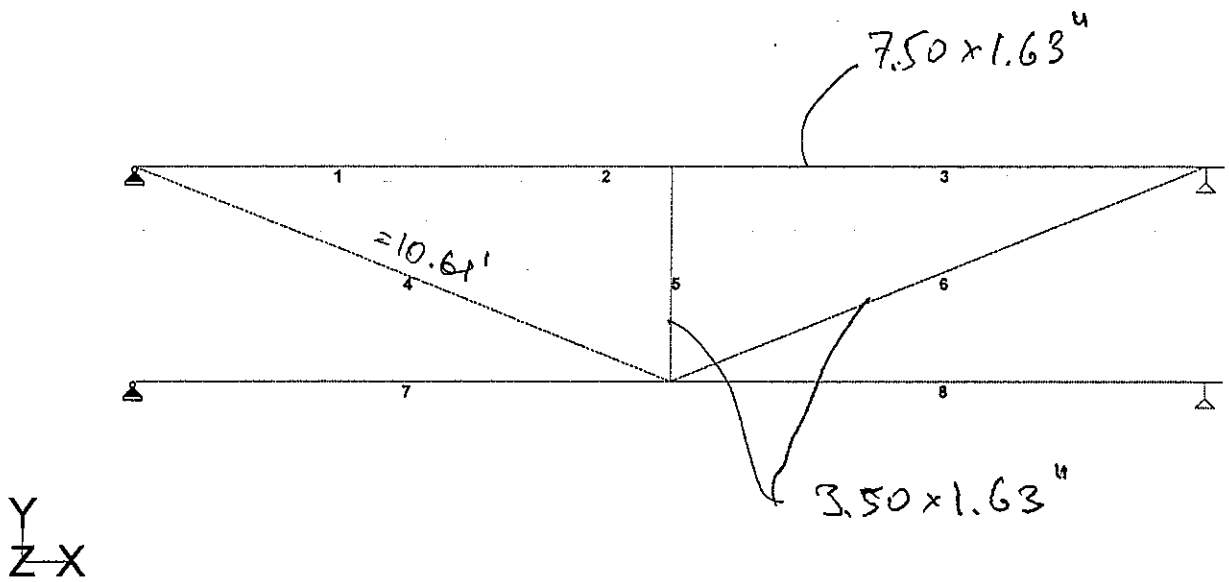

Load 101

Software licensed to Halcrow	Job No 1	Sheet No 1	Rev
	Part ROOF TRUSS AU-1		
Job Title ROOF TRUSS AU-1	Ref 1		
	By YB	Date 08/11/12	Chd
Client	File 1 - Truss AU - 1.std	Date/Time 14-Aug-2012 10:51	

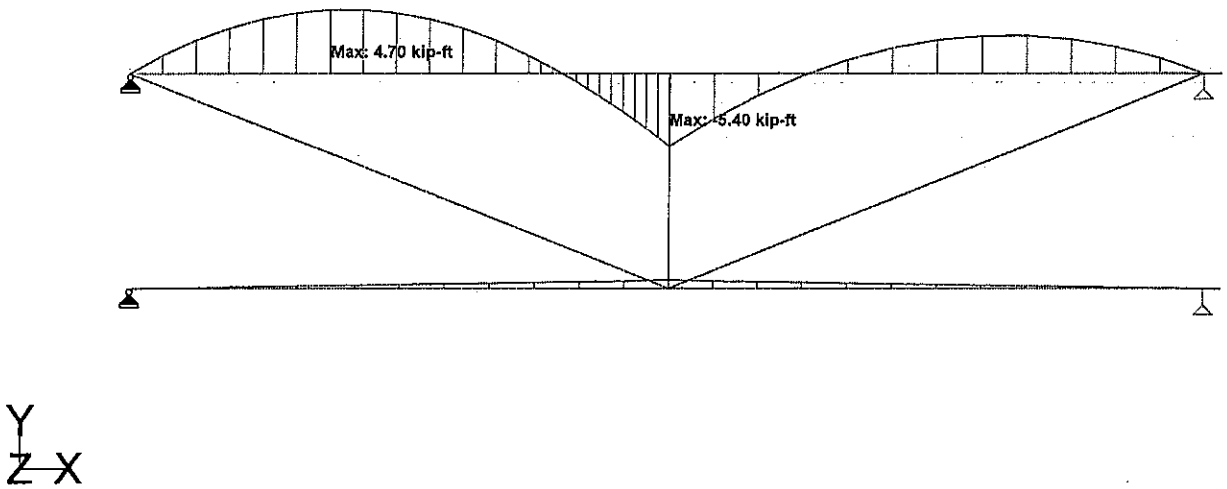

Load 104 : Bending Z
Moment - kip-ft

Software licensed to Halcrow	Job No 1	Sheet No 1	Rev
	Part ROOF TRUSS AU-1		
Job Title ROOF TRUSS AU-1	Ref 1		
	By YB	Date 08/11/12	Chd
Client	File 1 - Truss AU - 1.std	Date/Time 14-Aug-2012 10:51	

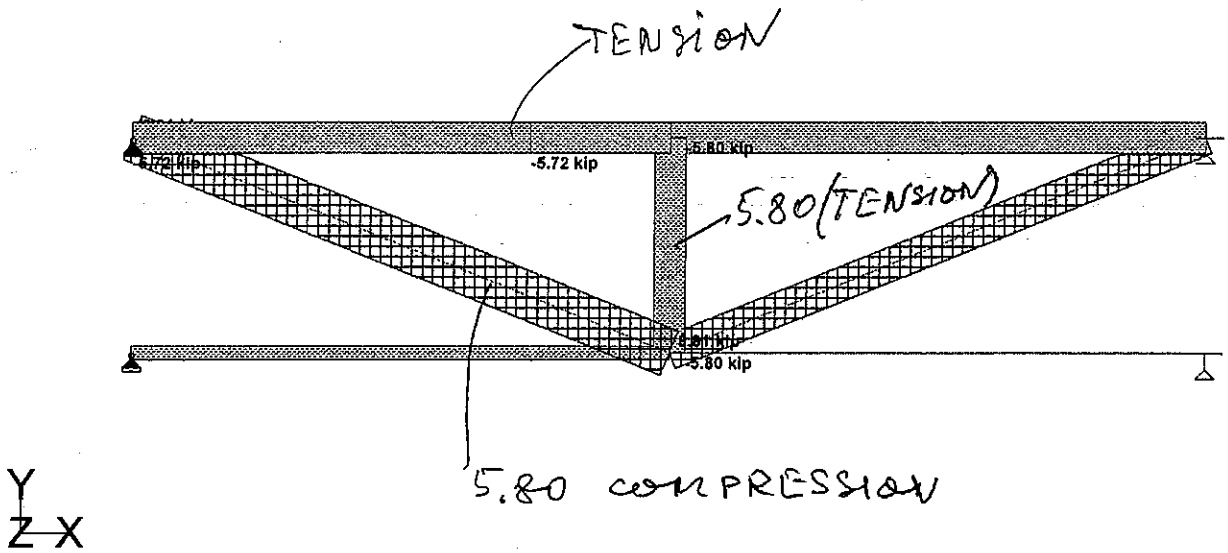

Load 104 : Axial Force
Force - kip

Halcrow
A CH2M HILL COMPANY

PROJECT	Glynn Archer School, Florida	SHEET NO ____ OF ____	
SUBJECT	Roof Truss Structural assessment — Uplift	JOB NO	
	Bending member — 11B — Truss AU-1	MADE	YB 15-Aug-12
		CHKD	

Bending member 1

All design procedures will be done according to
*The National Design Specification for Wood Construction (**NDS**)* 2005

Species: Southern Pine grade No.2
Nominal Sizes: B = 2 in
D = 8 in
Dressed Sizes: b = 1.50 in
d = 7.50 in
Dressed Sizes: Table 1B, p.14 Supplement
Classification: Visually Graded

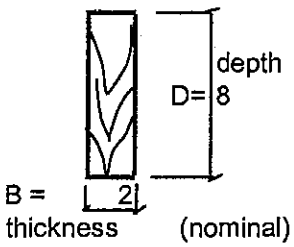

Dimension lumber – refers to lumber from 2" to 4" (nominal) thick,
NDS 4.1.3.2 and 2" (nominal) or more width

Design values: "Reference Design Value", Tables 4B, NDS **Supplement**

Fb =	1200	psi	bending
Fv =	175	psi	shear parallel to grain
Fcp =	565	psi	compression perpendicular to grain
E =	1600000	psi	modulus of elasticity
Emin =	580000	psi	modulus of elasticity (min)
Emin' =	580000	psi	

Adjustment Factors

(for normal building environmental, see Manual, p. 13)

C_D = 1.60 load duration factor (wind) see Table 2.3.2 p.9

C_F = 1.00 size factor (for Southern Pine already included, p. 37)

Cr = 1.00 repetitive member factor, p. 28

C_L = beam stability factor (calculated below)

Beam Stability Factor, C_L (see 3.3.3, p.13)

Member unsupported length Lu = 10.0 ft = 120 in d = 7.50 in

Lu / d = 120 / 7.50 = 16

If **Lu / d ≥ 7** use the following Eq.:

Member effective length: Le = 1.63 × Lu + 3 × d =

Le = 1.63 × 120 + 3 × 7.50 = 218 in

If **Lu / d < 7** use the following Eq.:

Le = 2.06 × Lu = 2.06 × 120 = 247

Use: Le = 218.1 in

Slenderness ratio: $R_B = \sqrt{Le \times d / b^2} = \sqrt{218 \times 7.50 / 2.25} = 27$

$R_B = 27 < 50$ **ok!**

$C_L =$ 1.00 beam stability factor, (intermediate value)

Fb*= Fb × C_D × C_F × Cr × C_L =

= 1200 × 1.60 × 1.00 × 1.00 × 1.00 = **1920** psi

F_{bE} = 1.2 × Emin' / R_B^2 = 1.2 × 580000 / 727 = 957

a = F_{bE} / Fb* = 957 / 1920 = 0.5

b = (1 + a) / 1.9 = (1 + 0.5)/ 1.9 = 0.79

C_L = b − √(b^2 − a / 0.95) =

C_L = 0.79 − √(0.62 − 0.5 / 0.95) = 0.48

Fb' = Fb* × C_L = 1920 × 0.48 = **916** psi

Check Stresses

Bending Moment in member M = 4.70 k-ft = 56400 p - in (see STAAD)

Modulus of inertia $I = \frac{b \times d^3}{12} = \frac{1.5 \times 7.50 \times 7.50 \times 7.50}{12} =$ **53** in^4

Section modulus $S = \frac{b \times d^2}{6} = \frac{1.5 \times 7.50 \times 7.50}{6} =$ **14.1** in^3

Actual bending Stress fb = M / S = 56400 / 14.1 = 4011 psi

fb = **4011** psi > Fb' = **916** psi **ng!**

Tension in member not considered

Halcrow
A CH2M HILL COMPANY

PROJECT	Glynn Archer School, Florida			SHEET NO ____ OF ____	
SUBJECT	Roof Truss Structural assessment	Uplift		JOB NO	
	Compression member	4	Truss AU-1	MADE	YB 15-Aug-12
				CHKD	

Compression member 4

All design procedures will be done according to
*The National Design Specification for Wood Construction (**NDS**)* 2005

Species: Southern Pine grade 2
Nominal Sizes: D1 = 4.0 in
D2 = 2.0 in
Dressed Sizes: d1 = 3.50 in
d2 = 1.50 in
Dressed Sizes: Table 1B, p.14 Supplement, Section Properties
Classification: Visually Graded

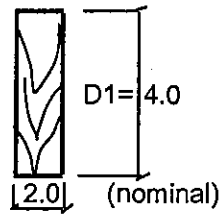

Cross section Area A = 3.50 × 1.50 = **5.25** In^2

Dimension lumber –
NDS 4.1.3.2

refers to lumber from 2" to 4" (nominal) thick,
and 2" (nominal) or more width

Design values:

"Reference Design Value", Table 4B, NDS **Supplement**

Fc = 1650 psi compression parallel to grain

E = 1600000 psi modulus of elasticity

Emin = 580000 psi modulus of elasticity (min)

Adjustment Factors

(for normal building environmental, see Manual, p. 13)

C_D = 1.60 load duration factor (wind) see Table 2.3.2 p.9

C_F = 1.00 size factor, for Southern Pine already incorporated I tabulated values (see p. 37)

C_p = column stability factor (calculated below)

F*c - tabulated compression design value multiplied by all adjustment factors, except **Cp**

F*c = Fb × C_D × C_F =

= 1650 × 1.60 × 1.00 = **2640** psi

Emin' = Emin = 580000 psi

Calculation of column stability factor Cp (see 3.7 - p.19)

Unbraced length of the compressed member L = 127 in = 10.6 ft

(pinned - pinned) Ke = 1.00 effective length coefficient, See Appendix G, p.156

Le = Ke × L = 1.00 x 127 = 127 in

Re - the slenderness ratio, for columns with rectangular cross section shall be taken as the larger of the ratios Lx/d1 or Lz/d2

Re = Le / d2 = 127.2 / 1.50 = 85 > 50 **ng!**

F*c = **2640** psi (see calculations above)

$$F_{cE} = \frac{K \times Emin'}{(Re)^2} = \frac{0.822 \times 580000}{85 \times 85} = 66$$

k1 = F_{cE} / F*c = 66 / 2640 = 0.03

c = 0.80 – for sawn lumber

$$k2 = \frac{1 + k1}{2c} = \frac{1 + 0.03}{2 \times 0.80} = 0.64$$

k3 =k2 ^ 2 = 0.64 × 0.64 = 0.41

$$Cp = k2 - \sqrt{k3 - k1 / c}$$

$$\mathbf{Cp} = 0.64 - \sqrt{0.41 - 0.03 / 0.80} = \mathbf{0.025}$$

Corrected value Fc' = 2640 × 0.025 = **66** psi

Allowable compression force P = A × Fc' = 5.25 × 66 = 346 p

Compression in considered member P = 5.80 k (see STAAD)

P = 0.35 k < 5.80 k **ng!**

Halcrow
A CH2M HILL COMPANY

PROJECT	Glynn Archer School, Florida	SHEET NO ___ OF ___	
SUBJECT	Roof Truss Structural assessment — Uplift	JOB NO	
	Tension member — 5 — Truss AU-1	MADE	YB 15-Aug-12
		CHKD	

Tension member 5

All design procedures will be done according to
*The National Design Specification for Wood Construction (**NDS**)* 2005

Species: Southern yellow Pine, grade 2

Nominal Sizes: B = 2 in = 0.17 ft
D = 4 in = 0.33 ft

Dressed Sizes: b = 1.50 in
d = 3.50 in

Dressed Sizes: Table 1B, p.14 Supplement

Classification: Visually Graded

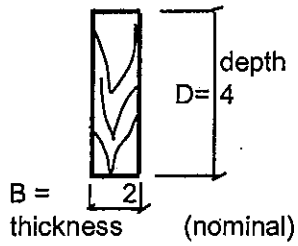

Cross section Area A = 1.50 × 3.50 = **5.3** sqi

Dimension lumber –
NDS 4.1.3.2

refers to lumber from 2" to 4" (nominal) thick,
and 2" (nominal) or more width

Design values:

"Reference Design Value", Tables 4B, NDS **Supplement**

Ft = 825 psi tension parallel to grain

Adjustment Factors

(for normal building environmental, see Manual, p. 13)

C_D = 1.60 load duration factor (wind) see Table 2.3.2 p.9

C_F = 1.00 size factor (for Southern Pine already included in tabulated values, see p. 37)

Ft' = Ft × C_D × C_F =

= 825 × 1.60 × 1.00 = 1320 psi

The allowable tension force:

T = A × Ft' = 5.3 × 1320 = 6930 lbf = 6.93 kips

Tension force in considered member T = 5.80 k (see STAAD)

T = 6.93 k > 5.80 k **ok!**

Truss B - 3

Compression Members 9 and 11 Upgrading

34

Software licensed to Halcrow	Job No ?	Sheet No 1	Rev
	Part ROOF TRUSS B-3		
Job Title ROOF TRUSS B-3	Ref 1		
	By YB	Date 08/11/12	Chd
Client	File 5 - Truss B - 3.std	Date/Time 14-Aug-2012 07:25	

TRUSS B-3 (GRAVITY)

MEMBERS 9 AND 11 UPGRADED

NEW ELEMENT 1.50×5.50" ADDED

TOTAL THICKNESS = 2.25"

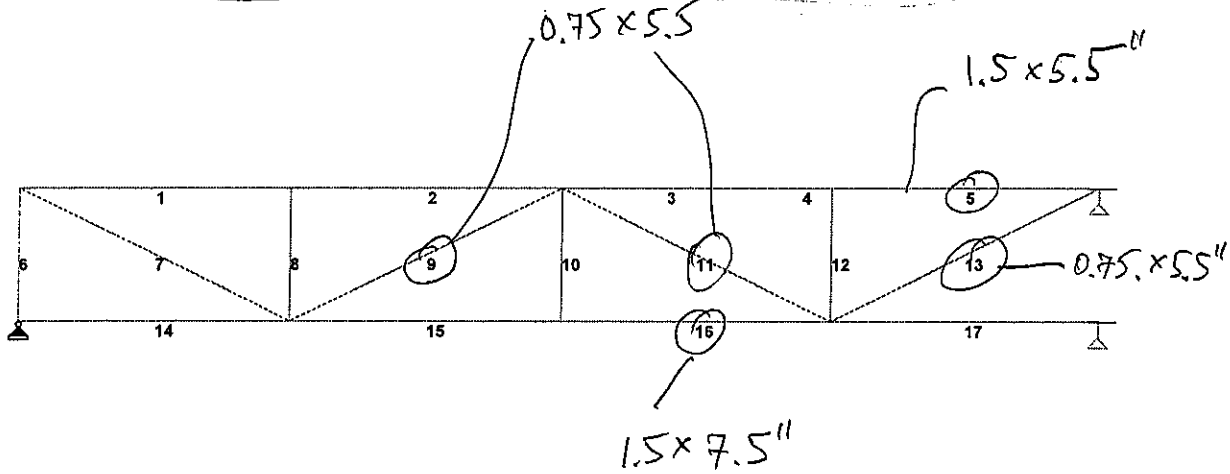

Y
Z X

Load 1

65

Software licensed to Halcrow	Job No ?	Sheet No 1	Rev
	Part ROOF TRUSS B-3		
Job Title ROOF TRUSS B-3	Ref 1		
	By YB	Date 08/11/12	Chd
Client	File 5 - Truss B - 3.std	Date/Time 14-Aug-2012 07:25	

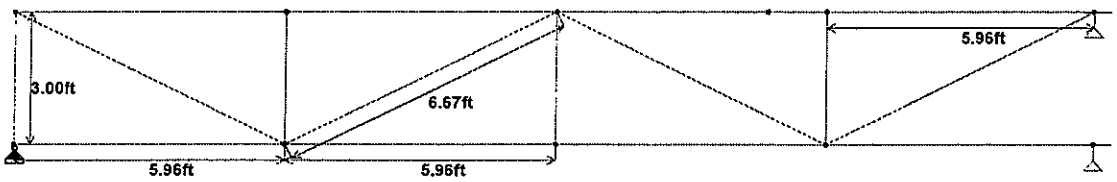

Y
Z X

Load 1

Halcrow
A CH2M HILL COMPANY

PROJECT	Glynn Archer School, Florida			SHEET NO ____	OF ____
SUBJECT	Roof Truss Structural assessment		Gravity Loads	JOB NO	
	Compression member	9	Truss B - 3	MADE	YB 16-Aug-12
				CHKD	

Compression member 9

All design procedures will be done according to
*The National Design Specification for Wood Construction (**NDS**)* 2005

Species: Southern Pine, grade 2
Nominal Sizes: D1 = 6.0 in
D2 = 3.0 in 2 x 6" new element attached
Dressed Sizes: d1 = 5.50 in
d2 = 2.25 in
Dressed Sizes: Table 1B, p.14 Supplement, Section Properties
Classification: Visually Graded

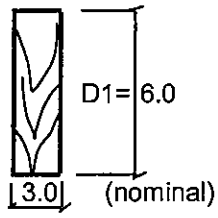

Cross section Area A = 5.50 × 2.25 = **12.38** In^2

Dimension lumber – refers to lumber from 2" to 4" (nominal) thick,
NDS 4.1.3.2 and 2" (nominal) or more width

Design values: "Reference Design Value", Table 4B, NDS **Supplement**

Fc = 1650 psi compression parallel to grain

E = 1600000 psi modulus of elasticity

Emin = 580000 psi modulus of elasticity (min)

Adjustment Factors

(for normal building environmental, see Manual, p. 13)

C_D = 1.60 load duration factor (wind) see Table 2.3.2 p.9

C_F = 1.00 size factor, for Southern Pine,already incorporated ! tabulated values (see p. 37)

C_p = column stability factor (calculated below)

F*c - tabulated compression design value multiplied by all adjustment factors, except **Cp**

F*c = Fb × C_D × C_F =

= 1650 × 1.60 × 1.00 = **2640** psi

Emin' = Emin = 580000 psi

Calculation of column stability factor Cp (see 3.7 - p.19)

Unbraced length of the compressed member L = 80 in = 6.67 ft

(pinned - pinned) Ke = 1.00 effective length coefficient, See Appendix G, p.156

Le = Ke × L = 1.00 x 80 = 80 in

Re - the slenderness ratio, for columns with rectangular cross section shall be taken as the larger of the ratios Lx/d1 or Lz/d2

Re = Le / d2 = 80 / 2.25 = 36 > 50 **ok!**

F*c = **2640** psi (see calculations above)

$$F_{cE} = \frac{K \times Emin'}{(Re)^2} = \frac{0.822 \times 580000}{36 \times 36} = 377$$

k1 = F_{cE} / F*c = 377 / 2640 = 0.14

c = 0.80 – for sawn lumber

$$k2 = \frac{1 + k1}{2c} = \frac{1 + 0.14}{2 \times 0.80} = 0.71$$

k3 =k2 ^ 2 = 0.71 × 0.71 = 0.51

$$Cp = k2 - \sqrt{k3 - k1 / c}$$

$$\mathbf{Cp} = 0.71 - \sqrt{0.51 - 0.14 / 0.80} = \mathbf{0.138}$$

Corrected value Fc' = 2640 × 0.138 = **365** psi

Allowable compression force P = A × Fc' = 12.38 × 365 = 4517 p

Compression in considered member P = 0.45 k (see STAAD)

P = 4.52 k > 0.45 k ng!

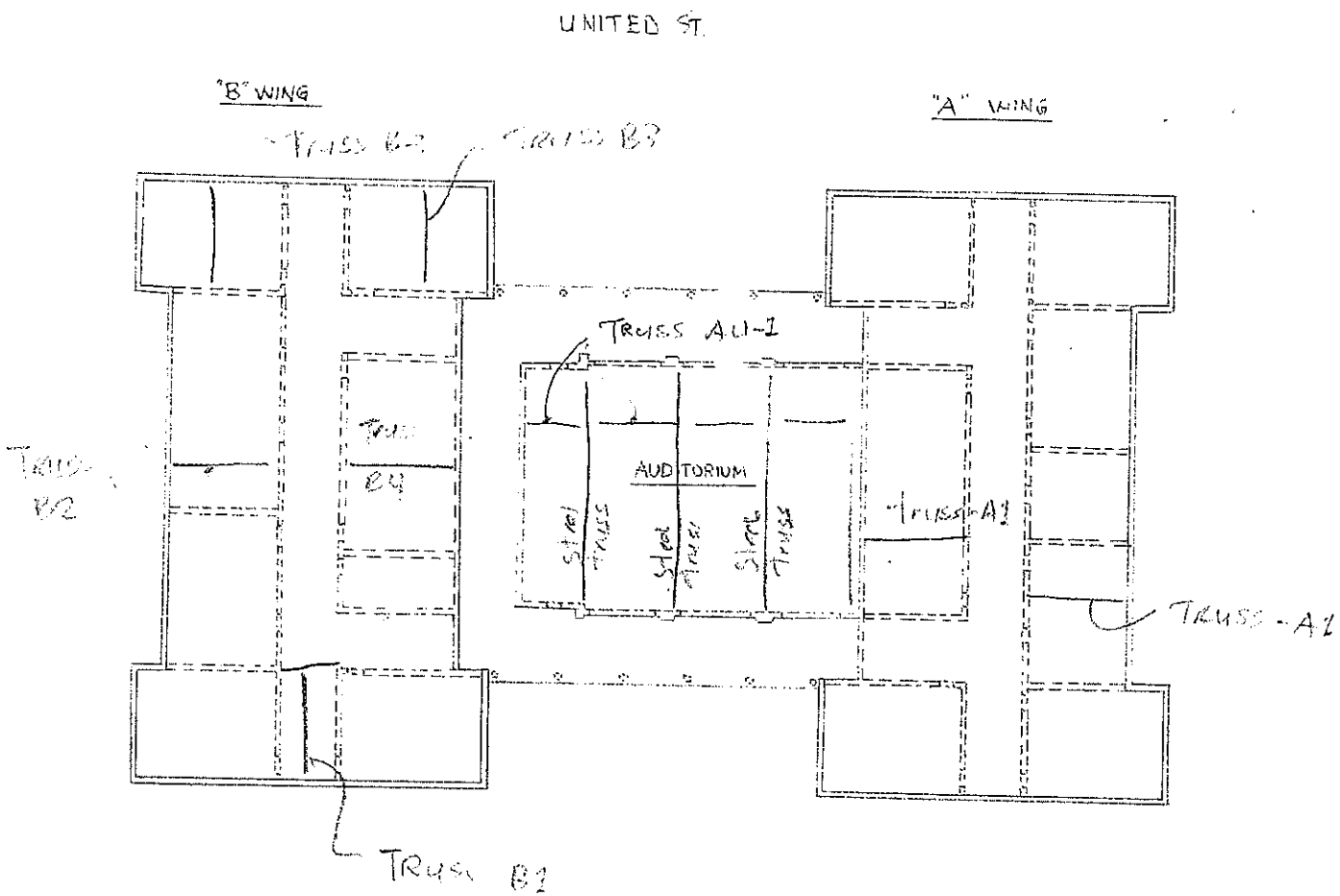
UNITED ST.
"B" WING
"A" WING
TRUSS B2
TRUSS B3
TRUSS AU-1
AUDITORIUM
Steel Truss
Steel Truss
Steel Truss
TRUSS A1
TRUSS A2
TRUSS B1

Key plan

ROOF TRUSS

AU - 1

Software licensed to Halcrow	Job No 1	Sheet No 1	Rev
	Part ROOF TRUSS AU-1		
Job Title ROOF TRUSS AU-1	Ref 1		
	By YB	Date 08/11/12	Chd
Client	File 1 - Truss AU - 1.std	Date/Time 13-Aug-2012 14:43	

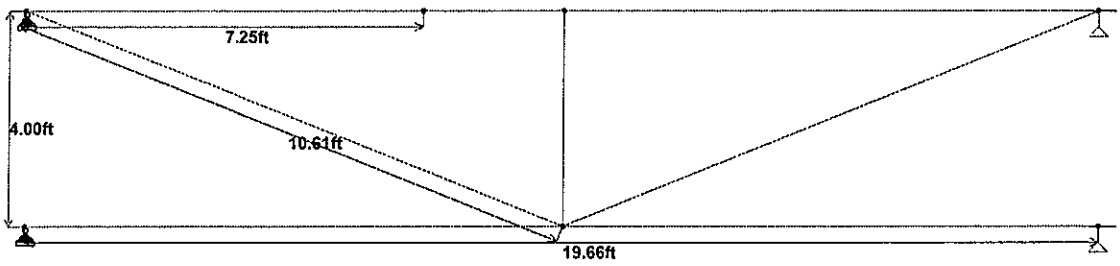

Load 1

Software licensed to Halcrow	Job No 1	Sheet No 1	Rev
	Part ROOF TRUSS AU-1		
Job Title ROOF TRUSS AU-1	Ref 1		
	By YB	Date 08/11/12	Chd
Client	File 1 - Truss AU - 1.std	Date/Time 13-Aug-2012 14:43	

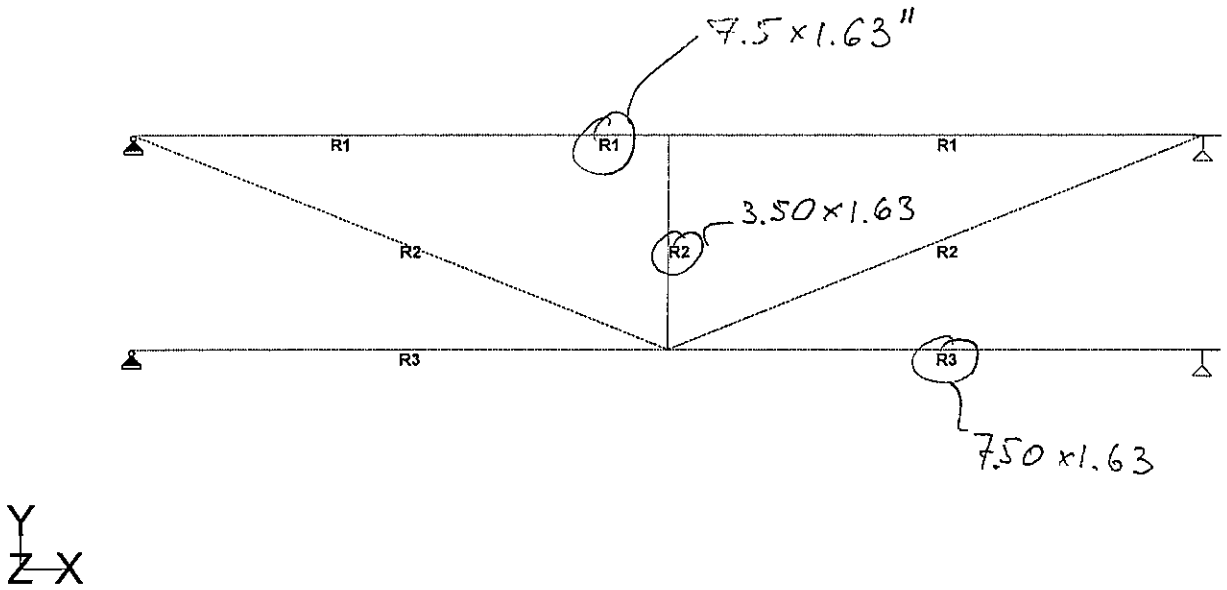

Load 1

```
STAAD SPACE DESIGN OF TRUSS
START JOB INFORMATION
JOB NAME ROOF TRUSS AU-1
JOB NO 1
JOB PART ROOF TRUSS AU-1
JOB REF 1
ENGINEER NAME YB
*                                          *********************************
*                                          *                               *
*                                          *                               *
*                                          *       ROOF TRUSS AU-1         *
*                                          *                               *
*                                          *                               *
*                                          *********************************
ENGINEER DATE 08/11/12
END JOB INFORMATION
INPUT WIDTH 79
*
UNIT FEET KIP
JOINT COORDINATES
1 0 0 0; 2 7.25 0 0; 3 9.83 0 0; 4 19.66 0 0; 5 0 -4 0; 6 9.83 -4 0;
7 19.66 -4 0;
*
MEMBER INCIDENCES
1 1 2; 2 2 3; 3 3 4; 4 1 6; 5 3 6; 6 4 6; 7 5 6; 8 6 7;
*
*
*
MEMBER TRUSS
4 TO 6
*
***********CONSTANS********
*
UNIT INCHES KIP
DEFINE MATERIAL START
*
ISOTROPIC TIMBER
E 1600
POISSON 0.3
DENSITY 1.85e-005
*ALPHA 5.5e-006
END DEFINE MATERIAL
*
CONSTANTS
MATERIAL TIMBER ALL
*
MEMBER PROPERTY AMERICAN
1 TO 3 PRIS YD 7.5 ZD 1.625
4 TO 6 PRIS YD 3.5 ZD 1.625
7 8 PRIS YD 7.5 ZD 1.625
************************
SUPPORTS
1 5 PINNED
4 7 FIXED BUT FX MY MZ
*
*******************************************************
UNIT FEET POUND
LOAD 1 S/W
SELFWEIGHT Y -1
*
LOAD 2 DR (ROOF DL)
*Truss c/c 8.5'
*Load 8.5' x 11 psf = 93.5 p/ft
MEMBER LOAD
1 TO 3 UNI GY -93.5
*
LOAD 3 LR (ROOF LL)
*Truss c/c 8.5'
*Load  8.5' x 20 psf = 170 p/ft
MEMBER LOAD
1 TO 3 UNI GY -170
```

```
1 TO 3 UNI GY -170
*
LOAD 4 WIND UPLIFT
*Truss c/c 8.5'
*Load  8.5' x  95 psf = 808 p/ft (Zone 1)
*Load  8.5' x 132 psf = 1122 p/ft (Zone 2)
MEMBER LOAD
1 UNI GY 1122
2 3 UNI GY 808
*
*******************************************************
LOAD COMB 101 (DL+LR) (EQ. 16-10)
1 1.0 2 1.0 3 1.0
*
LOAD COMB 102 (DL+0.6W) (EQ. 16-12)
1 1.0 2 1.0 4 0.6
*
LOAD COMB 103 (DL+0.45W+0.75LR) (EQ. 16-13)
1 1.0 2 1.0 4 0.45 3 0.75
*
LOAD COMB 104 (0.6DL+0.6W) (EQ. 16-14)
1 0.6 2 0.6 4 0.6
*******************************************************
PERFORM ANALYSIS PRINT STATICS CHECK
LOAD LIST 101 TO 104
PRINT MEMBER FORCES
PRINT SUPPORT REACTION
PRINT JOINT DISPLACEMENTS
UNIT INCHES KIP
PRINT MAXFORCE ENVELOPE
PRINT ALL
FINISH
```

Software licensed to Halcrow	Job No 1	Sheet No 1	Rev
	Part ROOF TRUSS AU-1		
Job Title ROOF TRUSS AU-1	Ref 1		
	By YB	Date 08/11/12	Chd
Client	File 1 - Truss AU - 1.std	Date/Time 14-Aug-2012 10:51	

WIND UPLIFT

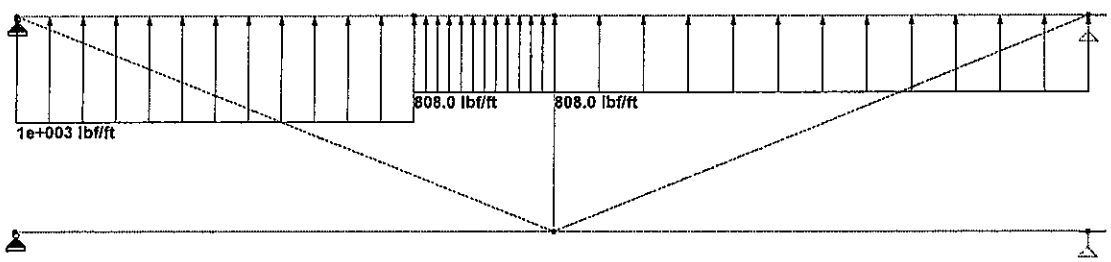

Y
Z X

Load 4

Software licensed to Halcrow	Job No 1	Sheet No 1	Rev
	Part ROOF TRUSS AU-1		
Job Title ROOF TRUSS AU-1	Ref 1		
	By YB	Date 08/11/12	Chd
Client	File 1 - Truss AU - 1.std	Date/Time 14-Aug-2012 10:51	

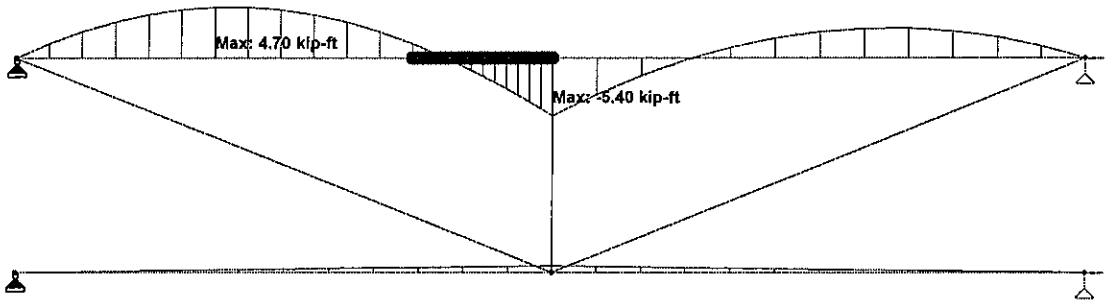

Load 104 : Bending Z
Moment - kip-ft

Software licensed to Halcrow	Job No 1	Sheet No 1	Rev
	Part ROOF TRUSS AU-1		
Job Title ROOF TRUSS AU-1	Ref 1		
	By YB	Date 08/11/12	Chd
Client	File 1 - Truss AU - 1.std	Date/Time 14-Aug-2012 10:51	

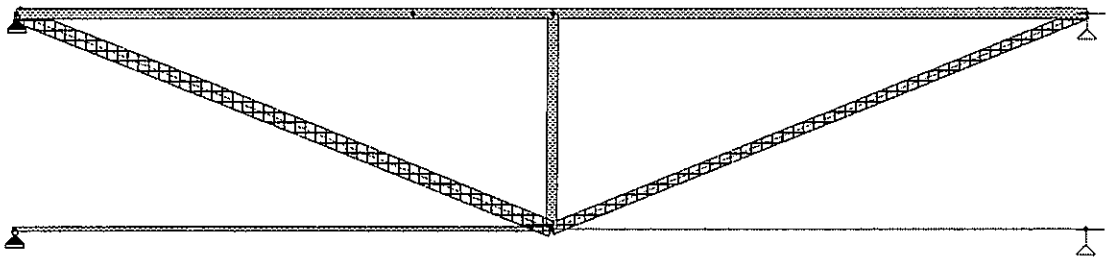

Y
Z X

Load 104 : Axial Force

Software licensed to Halcrow	Job No 1	Sheet No 1	Rev
	Part ROOF TRUSS AU-1		
Job Title ROOF TRUSS AU-1	Ref 1		
	By YB	Date 08/11/12	Chd
Client	File 1 - Truss AU - 1.std	Date/Time 13-Aug-2012 14:43	

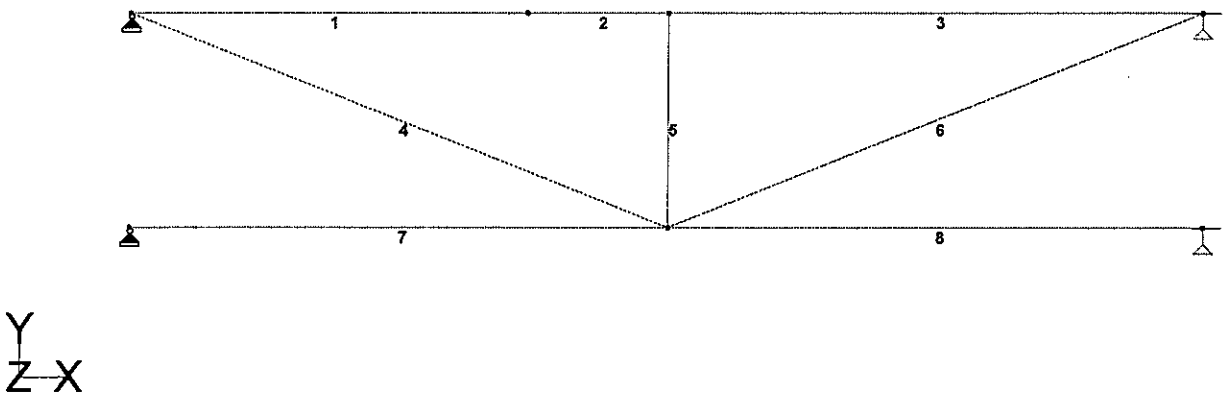

Load 1

Beam	L/C	Node	Axial Force (kip)	Shear-Y (kip)	Shear-Z (kip)	Torsion (kip*ft)	Moment-Y (kip*ft)	Moment-Z (kip*ft)
1	101	1	3.22	1.02	0.00	0.00	0.00	-0.00
		2	-3.22	0.91	0.00	0.00	0.00	0.39
2	101	2	3.22	-0.91	0.00	0.00	0.00	-0.39
		3	-3.22	1.60	0.00	0.00	0.00	-2.84
3	101	3	3.22	1.60	0.00	0.00	0.00	2.84
		4	-3.22	1.02	0.00	0.00	0.00	0.00
4	101	1	-4.96	0.01	0.00	0.00	0.00	0.00
		6	4.95	0.01	0.00	0.00	0.00	0.00
5	101	3	3.20	0.00	0.00	0.00	0.00	0.00
		6	-3.20	0.00	0.00	0.00	0.00	0.00
6	101	4	-3.48	0.01	0.00	0.00	0.00	0.00
		6	3.47	0.01	0.00	0.00	0.00	0.00
7	101	5	1.37	0.04	0.00	0.00	0.00	-0.00
		6	-1.37	-0.02	0.00	0.00	0.00	0.30
8	101	6	0.00	-0.02	0.00	0.00	0.00	-0.30
		7	-0.00	0.04	0.00	0.00	0.00	0.00

Beam	L/C	Node	Axial Force (kip)	Shear-Y (kip)	Shear-Z (kip)	Torsion (kip-ft)	Moment-Y (kip-ft)	Moment-Z (kip-ft)
1	104	1	-5.72	-2.41	0.00	0.00	0.00	0.00
		2	5.72	-2.05	0.00	0.00	0.00	-1.31
2	104	2	-5.72	2.05	0.00	0.00	0.00	1.31
		3	5.72	-3.15	0.00	0.00	0.00	5.40
3	104	3	-5.72	-2.65	0.00	0.00	0.00	-5.40
		4	5.72	-1.55	0.00	0.00	0.00	0.00
4	104	1	8.81	0.00	0.00	0.00	0.00	0.00
		6	-8.81	0.00	0.00	0.00	0.00	0.00
5	104	3	-5.80	0.00	0.00	0.00	0.00	0.00
		6	5.80	0.00	0.00	0.00	0.00	0.00
6	104	4	6.18	0.00	0.00	0.00	0.00	0.00
		6	-6.18	0.00	0.00	0.00	0.00	0.00
7	104	5	-2.44	-0.05	0.00	0.00	0.00	-0.00
		6	2.44	0.07	0.00	0.00	0.00	-0.61
8	104	6	-0.00	0.07	0.00	0.00	0.00	0.61
		7	0.00	-0.05	0.00	0.00	0.00	0.00

Software licensed to Halcrow	Job No 1	Sheet No 1	Rev
	Part ROOF TRUSS AU-1		
Job Title ROOF TRUSS AU-1	Ref 1		
	By YB	Date 08/11/12	Chd
Client	File 1 - Truss AU - 1.std	Date/Time 13-Aug-2012 14:43	

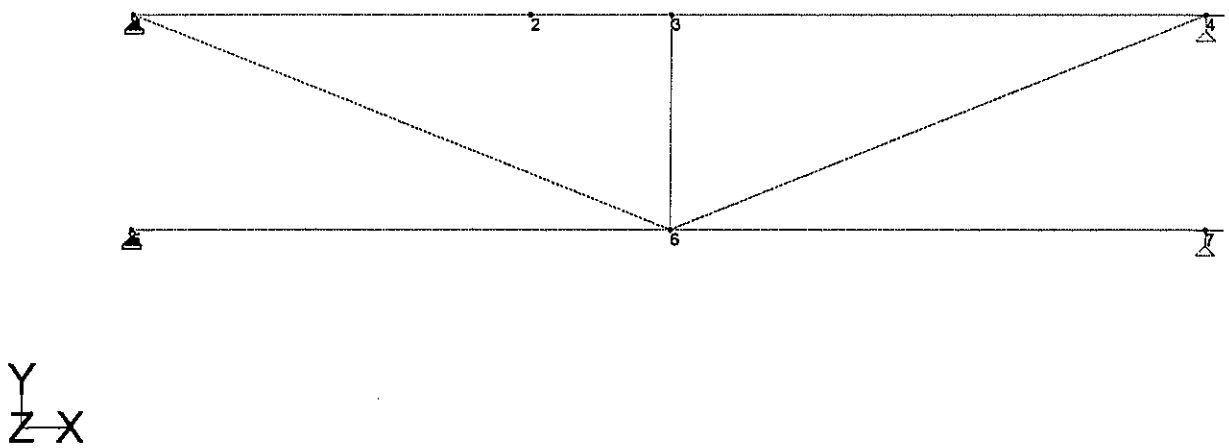

Load 1

JOINT DISPLACEMENT (INCH RADIANS) STRUCTURE TYPE = SPACE

JOINT	LOAD	X-TRANS	Y-TRANS	Z-TRANS	X-ROTAN	Y-ROTAN	Z-ROTAN
1	101	0.00000	0.00000	0.00000	0.00000	0.00000	-0.01118
	102	0.00000	0.00000	0.00000	0.00000	0.00000	0.02468
	103	0.00000	0.00000	0.00000	0.00000	0.00000	0.01216
	104	0.00000	0.00000	0.00000	0.00000	0.00000	0.02631
2	101	-0.01437	-0.32914	0.00000	0.00000	0.00000	0.00438
	102	0.02339	0.68605	0.00000	0.00000	0.00000	-0.01136
	103	0.00944	0.32808	0.00000	0.00000	0.00000	-0.00602
	104	0.02553	0.73437	0.00000	0.00000	0.00000	-0.01199
3	101	-0.01948	-0.22132	0.00000	0.00000	0.00000	0.00000
	102	0.03172	0.36102	0.00000	0.00000	0.00000	-0.00465
	103	0.01279	0.14579	0.00000	0.00000	0.00000	-0.00349
	104	0.03461	0.39383	0.00000	0.00000	0.00000	-0.00465
4	101	-0.03896	0.00000	0.00000	0.00000	0.00000	0.01118
	102	0.06343	0.00000	0.00000	0.00000	0.00000	-0.01450
	103	0.02559	0.00000	0.00000	0.00000	0.00000	-0.00452
	104	0.06922	0.00000	0.00000	0.00000	0.00000	-0.01613
5	101	0.00000	0.00000	0.00000	0.00000	0.00000	-0.00268
	102	0.00000	0.00000	0.00000	0.00000	0.00000	0.00413
	103	0.00000	0.00000	0.00000	0.00000	0.00000	0.00162
	104	0.00000	0.00000	0.00000	0.00000	0.00000	0.00455
6	101	-0.00830	-0.20445	0.00000	0.00000	0.00000	0.00000
	102	0.01351	0.33288	0.00000	0.00000	0.00000	0.00000
	103	0.00545	0.13428	0.00000	0.00000	0.00000	0.00000
	104	0.01474	0.36325	0.00000	0.00000	0.00000	0.00000
7	101	-0.00830	0.00000	0.00000	0.00000	0.00000	0.00268
	102	0.01351	0.00000	0.00000	0.00000	0.00000	-0.00413
	103	0.00545	0.00000	0.00000	0.00000	0.00000	-0.00162
	104	0.01474	0.00000	0.00000	0.00000	0.00000	-0.00455

********** END OF LATEST ANALYSIS RESULT **********

```
 99. UNIT INCHES KIP
100. PRINT MAXFORCE ENVELOPE
```

ROOF TRUSS

A - 1

Software licensed to Halcrow	Job No ?	Sheet No 1	Rev
	Part ROOF TRUSS A-1		
Job Title ROOF TRUSS A-1	Ref 1		
	By BY	Date 08/11/12	Chd
Client	File 2 - Truss A - 1.std	Date/Time 13-Aug-2012 15:01	

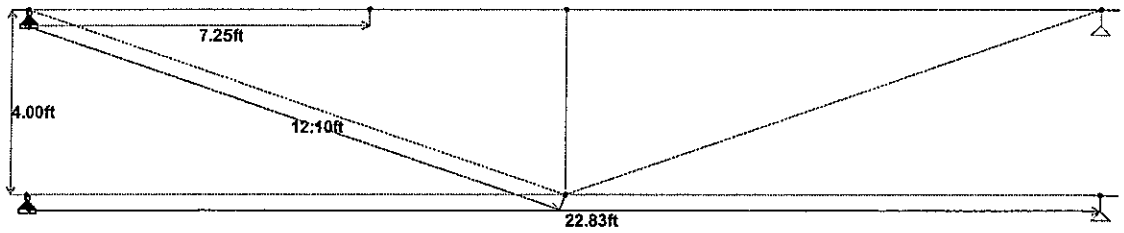

Load 1

Software licensed to Halcrow	Job No ?	Sheet No 1	Rev
	Part ROOF TRUSS A-1		
Job Title ROOF TRUSS A-1	Ref 1		
	By BY	Date 08/11/12	Chd
Client	File 2 - Truss A - 1.std	Date/Time 13-Aug-2012 15:46	

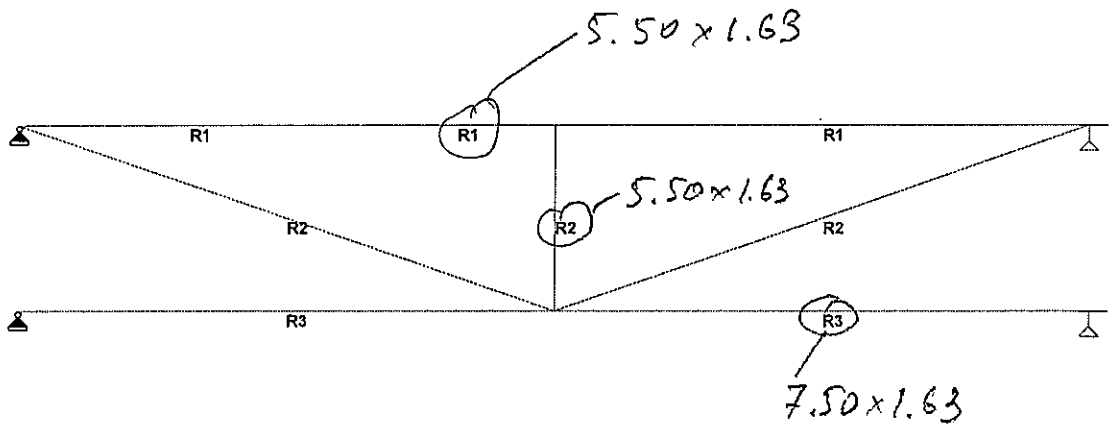

Y
Z X

Load 1

```
STAAD SPACE DESIGN OF TRUSS
START JOB INFORMATION
JOB NAME ROOF TRUSS A-1
JOB NO ?
JOB PART ROOF TRUSS A-1
JOB REF 1
ENGINEER NAME BY
*                                          *********************************
*                                          *                               *
*                                          *                               *
*                                          *         ROOF TRUSS A-1        *
*                                          *                               *
*                                          *                               *
*                                          *********************************
ENGINEER DATE 08/11/12
END JOB INFORMATION
INPUT WIDTH 79
*
UNIT FEET KIP
JOINT COORDINATES
1 0 0 0; 2 7.25 0 0; 3 11.415 0 0; 4 22.83 0 0; 5 0 -4 0; 6 11.415 -4 0;
7 22.83 -4 0;
*
MEMBER INCIDENCES
1 1 2; 2 2 3; 3 3 4; 4 1 6; 5 3 6; 6 4 6; 7 5 6; 8 6 7;
*
*
*
MEMBER TRUSS
4 TO 6
*
***********CONSTANS********
*
UNIT INCHES KIP
DEFINE MATERIAL START
*
ISOTROPIC TIMBER
E 1600
POISSON 0.3
DENSITY 1.85e-005
*ALPHA 5.5e-006
END DEFINE MATERIAL
*
CONSTANTS
MATERIAL TIMBER ALL
*
MEMBER PROPERTY AMERICAN
1 TO 3 PRIS YD 5.5 ZD 1.625
4 TO 6 PRIS YD 5.5 ZD 1.625
7 8 PRIS YD 7.5 ZD 1.625
************************
SUPPORTS
1 5 PINNED
4 7 FIXED BUT FX MY MZ
*
*******************************************************
UNIT FEET POUND
LOAD 1 S/W
SELFWEIGHT Y -1
*
LOAD 2 DR (ROOF DL)
*Truss c/c 2'
*Load 2' x 11 psf = 22 p/ft
MEMBER LOAD
1 TO 3 UNI GY -22
*
LOAD 3 LR (ROOF LL)
*Truss c/c 2'
*Load  2' x 20 psf = 40 p/ft
MEMBER LOAD
1 TO 3 UNI GY -40
```

```
1 TO 3 UNI GY -40
*
LOAD 4 WIND UPLIFT
*Truss c/c 2'
*Load  2' x  95 psf = 190 p/ft (Zone 1)
*Load  2' x 132 psf = 264 p/ft (Zone 2)
MEMBER LOAD
1 UNI GY 264
2 3 UNI GY 190
*
*******************************************************
LOAD COMB 101 (DL+LR) (EQ. 16-10)
1 1.0 2 1.0 3 1.0
*
LOAD COMB 102 (DL+0.6W) (EQ. 16-12)
1 1.0 2 1.0 4 0.6
*
LOAD COMB 103 (DL+0.45W+0.75LR) (EQ. 16-13)
1 1.0 2 1.0 4 0.45 3 0.75
*
LOAD COMB 104 (0.6DL+0.6W) (EQ. 16-14)
1 0.6 2 0.6 4 0.6
*******************************************************
PERFORM ANALYSIS PRINT STATICS CHECK
LOAD LIST 101 TO 104
PRINT MEMBER FORCES
PRINT SUPPORT REACTION
PRINT JOINT DISPLACEMENTS
UNIT INCHES KIP
PRINT MAXFORCE ENVELOPE
PRINT ALL
FINISH
```

Software licensed to Halcrow	Job No ?	Sheet No 1	Rev
	Part ROOF TRUSS A-1		
Job Title ROOF TRUSS A-1	Ref 1		
	By BY	Date 08/11/12	Chd
Client	File 2 - Truss A - 1.std	Date/Time 13-Aug-2012 15:01	

WIND UPLIFT

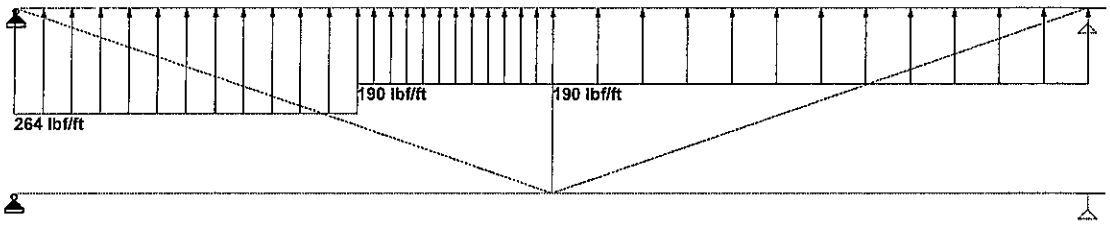

Load 4

Software licensed to Halcrow	Job No ?	Sheet No 1	Rev
	Part ROOF TRUSS A-1		
Job Title ROOF TRUSS A-1	Ref 1		
	By BY	Date 08/11/12	Chd
Client	File 2 - Truss A - 1.std	Date/Time 13-Aug-2012 15:10	

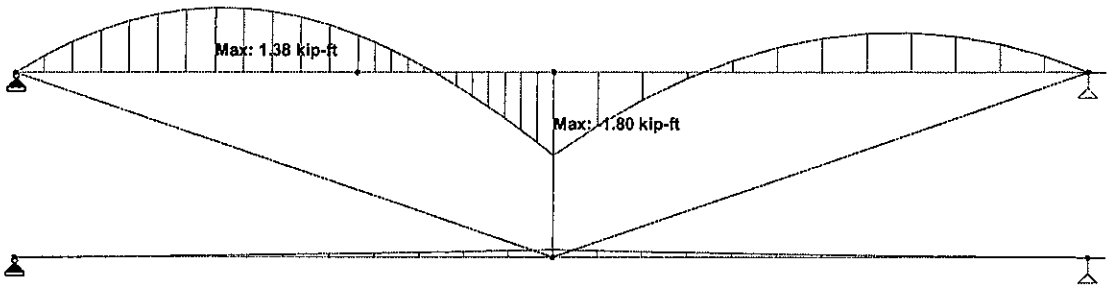

Load 104 : Bending Z
Moment - kip-ft

Software licensed to Halcrow	Job No ?	Sheet No 1	Rev
	Part ROOF TRUSS A-1		
Job Title ROOF TRUSS A-1	Ref 1		
	By BY	Date 08/11/12	Chd
Client	File 2 - Truss A - 1.std	Date/Time 13-Aug-2012 15:10	

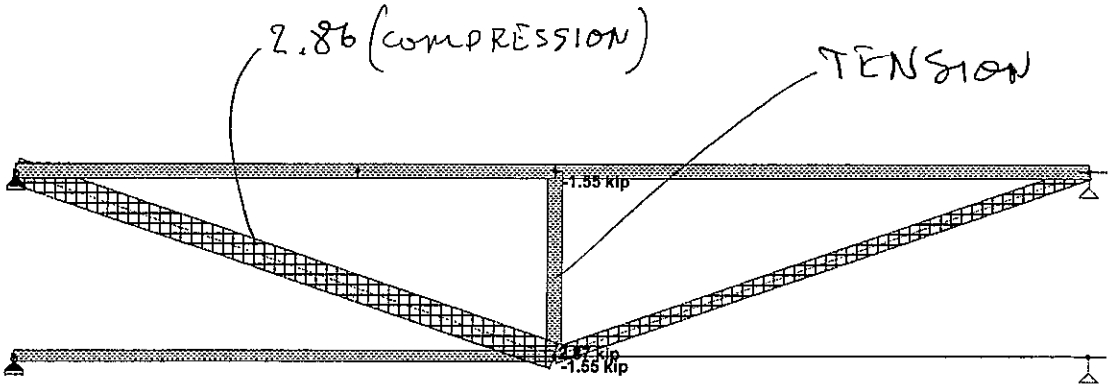

Y
Z X

Load 104 : Axial Force
Force - kip

Software licensed to Halcrow	Job No ?	Sheet No 1	Rev
	Part ROOF TRUSS A-1		
Job Title ROOF TRUSS A-1	Ref 1		
	By BY	Date 08/11/12	Chd
Client	File 2 - Truss A - 1.std	Date/Time 13-Aug-2012 15:01	

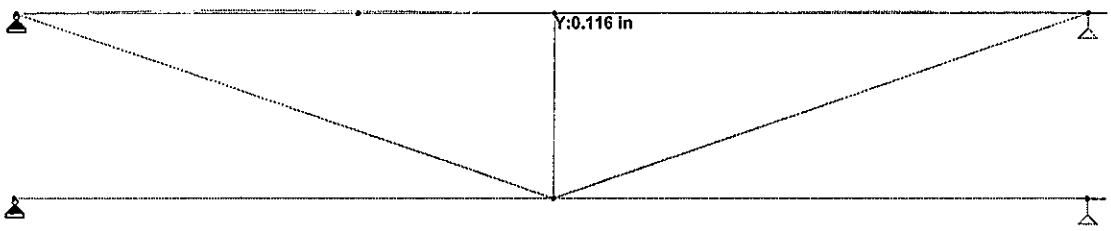

Y
Z X

DEFLECTION

Load 104 : Displacement
Displacement - in

Software licensed to Halcrow	Job No ?	Sheet No 1	Rev
	Part ROOF TRUSS A-1		
Job Title ROOF TRUSS A-1	Ref 1		
	By BY	Date 08/11/12	Chd
Client	File 2 - Truss A - 1.std	Date/Time 13-Aug-2012 15:46	

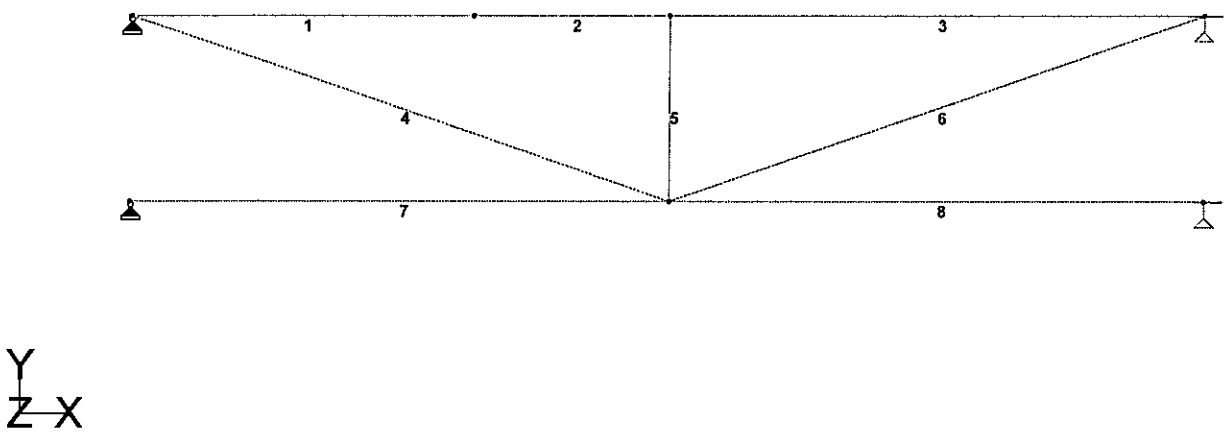

Load 1

Beam	L/C	Node	Axial Force (kip)	Shear-Y (kip)	Shear-Z (kip)	Torsion (kip·ft)	Moment-Y (kip·ft)	Moment-Z (kip·ft)
1	101	1	1.00	0.28	0.00	0.00	0.00	0.00
		2	-1.00	0.19	0.00	0.00	0.00	0.33
2	101	2	1.00	-0.19	0.00	0.00	0.00	-0.33
		3	-1.00	0.45	0.00	0.00	0.00	-1.00
3	101	3	1.00	0.45	0.00	0.00	0.00	1.00
		4	-1.00	0.28	0.00	0.00	0.00	-0.00
4	101	1	-1.86	0.01	0.00	0.00	0.00	0.00
		6	1.85	0.01	0.00	0.00	0.00	0.00
5	101	3	0.91	0.00	0.00	0.00	0.00	0.00
		6	-0.91	0.00	0.00	0.00	0.00	0.00
6	101	4	-1.06	0.01	0.00	0.00	0.00	0.00
		6	1.05	0.01	0.00	0.00	0.00	0.00
7	101	5	0.75	0.02	0.00	0.00	0.00	-0.00
		6	-0.75	0.01	0.00	0.00	0.00	0.04
8	101	6	-0.00	0.01	0.00	0.00	0.00	-0.04
		7	0.00	0.02	0.00	0.00	0.00	0.00

Beam	L/C	Node	Axial Force (kip)	Shear-Y (kip)	Shear-Z (kip)	Torsion (kip-ft)	Moment-Y (kip-ft)	Moment-Z (kip-ft)
1	104	1	-1.54	-0.63	0.00	0.00	0.00	0.00
		2	1.54	-0.41	0.00	0.00	0.00	-0.79
2	104	2	-1.54	0.41	0.00	0.00	0.00	0.79
		3	1.54	-0.83	0.00	0.00	0.00	1.80
3	104	3	-1.54	-0.73	0.00	0.00	0.00	-1.80
		4	1.54	-0.41	0.00	0.00	0.00	0.00
4	104	1	2.86	0.01	0.00	0.00	0.00	0.00
		6	-2.87	0.01	0.00	0.00	0.00	0.00
5	104	3	-1.55	0.00	0.00	0.00	0.00	0.00
		6	1.55	0.00	0.00	0.00	0.00	0.00
6	104	4	1.63	0.01	0.00	0.00	0.00	0.00
		6	-1.64	0.01	0.00	0.00	0.00	0.00
7	104	5	-1.16	-0.00	0.00	0.00	0.00	0.00
		6	1.16	0.02	0.00	0.00	0.00	-0.16
8	104	6	0.00	0.02	0.00	0.00	0.00	0.16
		7	0.00	-0.00	0.00	0.00	0.00	0.00

Software licensed to Halcrow	Job No ?	Sheet No 1	Rev
	Part ROOF TRUSS A-1		
Job Title ROOF TRUSS A-1	Ref 1		
	By BY	Date 08/11/12	Chd
Client	File 2 - Truss A - 1.std	Date/Time 13-Aug-2012 15:46	

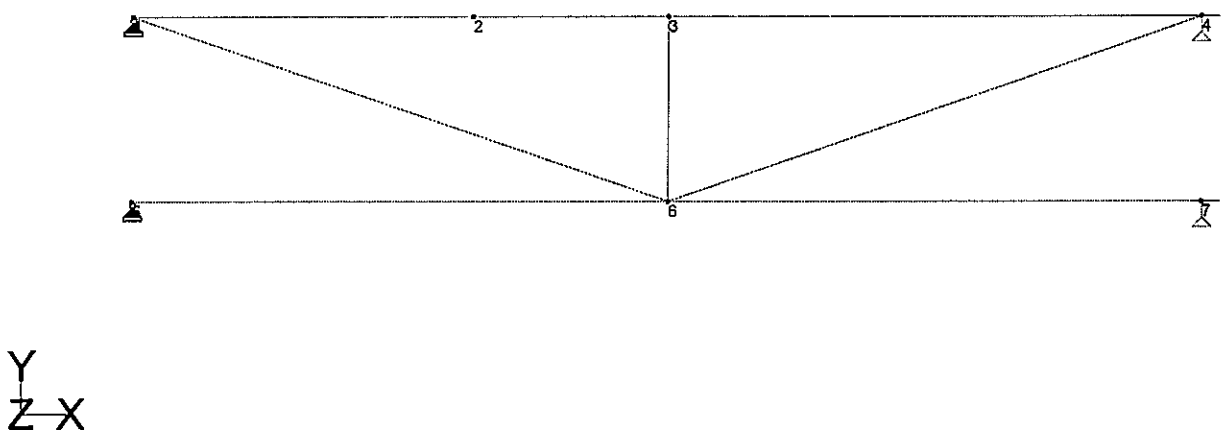

Load 1

JOINT DISPLACEMENT (INCH RADIANS) STRUCTURE TYPE = SPACE

JOINT	LOAD	X-TRANS	Y-TRANS	Z-TRANS	X-ROTAN	Y-ROTAN	Z-ROTAN
1	101	0.00000	0.00000	0.00000	0.00000	0.00000	-0.00877
	102	0.00000	0.00000	0.00000	0.00000	0.00000	0.01882
	103	0.00000	0.00000	0.00000	0.00000	0.00000	0.00920
	104	0.00000	0.00000	0.00000	0.00000	0.00000	0.02015
2	101	-0.00607	-0.27302	0.00000	0.00000	0.00000	0.00409
	102	0.00837	0.58702	0.00000	0.00000	0.00000	-0.00893
	103	0.00300	0.28800	0.00000	0.00000	0.00000	-0.00438
	104	0.00939	0.62902	0.00000	0.00000	0.00000	-0.00954
3	101	-0.00955	-0.07493	0.00000	0.00000	0.00000	0.00000
	102	0.01317	0.10391	0.00000	0.00000	0.00000	-0.00354
	103	0.00472	0.03739	0.00000	0.00000	0.00000	-0.00265
	104	0.01478	0.11644	0.00000	0.00000	0.00000	-0.00354
4	101	-0.01910	0.00000	0.00000	0.00000	0.00000	0.00877
	102	0.02635	0.00000	0.00000	0.00000	0.00000	-0.01056
	103	0.00944	0.00000	0.00000	0.00000	0.00000	-0.00300
	104	0.02955	0.00000	0.00000	0.00000	0.00000	-0.01189
5	101	0.00000	0.00000	0.00000	0.00000	0.00000	-0.00092
	102	0.00000	0.00000	0.00000	0.00000	0.00000	0.00095
	103	0.00000	0.00000	0.00000	0.00000	0.00000	0.00026
	104	0.00000	0.00000	0.00000	0.00000	0.00000	0.00114
6	101	-0.00527	-0.07188	0.00000	0.00000	0.00000	0.00000
	102	0.00727	0.09916	0.00000	0.00000	0.00000	0.00000
	103	0.00261	0.03555	0.00000	0.00000	0.00000	0.00000
	104	0.00816	0.11123	0.00000	0.00000	0.00000	0.00000
7	101	-0.00527	0.00000	0.00000	0.00000	0.00000	0.00092
	102	0.00727	0.00000	0.00000	0.00000	0.00000	-0.00095
	103	0.00261	0.00000	0.00000	0.00000	0.00000	-0.00026
	104	0.00816	0.00000	0.00000	0.00000	0.00000	-0.00114

********** END OF LATEST ANALYSIS RESULT **********

99. UNIT INCHES KIP
100. PRINT MAXFORCE ENVELOPE

ROOF TRUSS

B - 1

Software licensed to Halcrow	Job No ?	Sheet No 1	Rev
	Part ROOF TRUSS B-1		
Job Title ROOF TRUSS B-1	Ref 1		
	By BY	Date 08/11/12	Chd
Client	File 3 - Truss B - 1.std	Date/Time 13-Aug-2012 15:12	

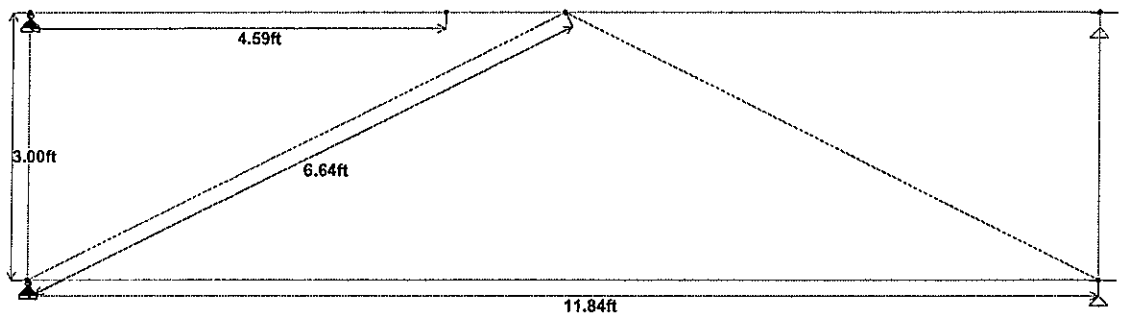

Load 1

Software licensed to Halcrow	Job No ?	Sheet No 1	Rev
	Part ROOF TRUSS B-1		
Job Title ROOF TRUSS B-1	Ref 1		
	By BY	Date 08/11/12	Chd
Client	File 3 - Truss B - 1.std	Date/Time 13-Aug-2012 15:46	

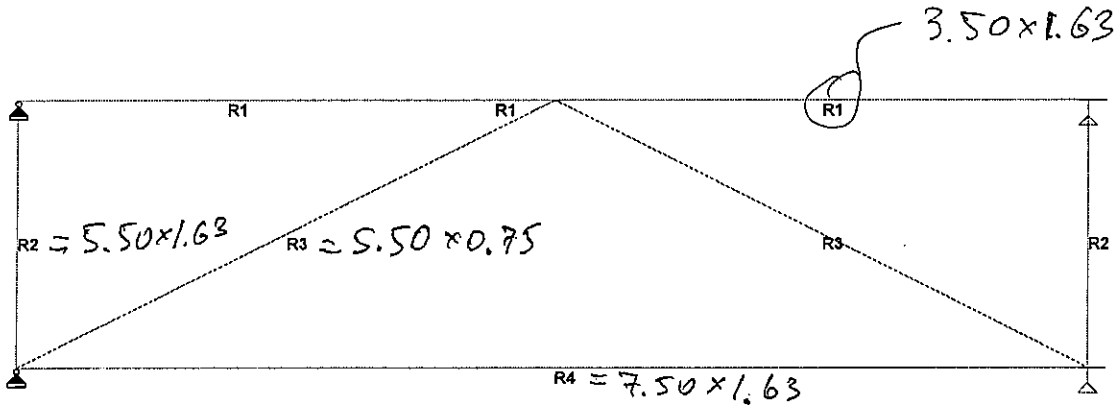

Load 1

```
STAAD SPACE DESIGN OF TRUSS
START JOB INFORMATION
JOB NAME ROOF TRUSS B-1
JOB NO ?
JOB PART ROOF TRUSS B-1
JOB REF 1
ENGINEER NAME BY
*                                          *********************************
*                                          *                               *
*                                          *                               *
*                                          *         ROOF TRUSS B-1        *
*                                          *                               *
*                                          *                               *
*                                          *********************************
ENGINEER DATE 08/11/12
END JOB INFORMATION
INPUT WIDTH 79
*
UNIT FEET KIP
JOINT COORDINATES
1 0 0 0; 2 4.59 0 0; 3 5.92 0 0; 4 11.84 0 0; 5 0 -3 0; 6 11.84 -3 0;
*
MEMBER INCIDENCES
1 1 2; 2 2 3; 3 3 4; 4 1 5; 5 3 5; 6 3 6; 7 4 6; 8 5 6;
*
*
*
MEMBER TRUSS
4 TO 8
*
***********CONSTANS********
*
*
UNIT INCHES KIP
DEFINE MATERIAL START
ISOTROPIC TIMBER
E 1600
POISSON 0.3
DENSITY 1.85e-005
*ALPHA 5.5e-006
END DEFINE MATERIAL
*
CONSTANTS
MATERIAL TIMBER ALL
*
MEMBER PROPERTY AMERICAN
1 TO 3 PRIS YD 3.5 ZD 1.625
4 7 PRIS YD 5.5 ZD 1.625
5 6 PRIS YD 5.5 ZD 0.75
8 PRIS YD 7.5 ZD 1.625
*************************
SUPPORTS
1 5 PINNED
4 6 FIXED BUT FX MY MZ
*
*********************************************************
UNIT FEET POUND
LOAD 1 S/W
SELFWEIGHT Y -1
*
LOAD 2 DR (ROOF DL)
*Truss c/c 2'
*Load 2' x 11 psf = 22 p/ft
MEMBER LOAD
1 TO 3 UNI GY -22
*
LOAD 3 LR (ROOF LL)
*Truss c/c 2'
*Load  2' x 20 psf = 40 p/ft
MEMBER LOAD
1 TO 3 UNI GY -40
```

```
1 TO 3 UNI GY -40
*
LOAD 4 WIND UPLIFT
*Truss c/c 2'
*Load  2' x  95 psf = 190 p/ft (Zone 1)
*Load  2' x 132 psf = 264 p/ft (Zone 2)
MEMBER LOAD
1 UNI GY 264
2 3 UNI GY 190
*
*******************************************************
LOAD COMB 101 (DL+LR) (EQ. 16-10)
1 1.0 2 1.0 3 1.0
*
LOAD COMB 102 (DL+0.6W) (EQ. 16-12)
1 1.0 2 1.0 4 0.6
*
LOAD COMB 103 (DL+0.45W+0.75LR) (EQ. 16-13)
1 1.0 2 1.0 4 0.45 3 0.75
*
LOAD COMB 104 (0.6DL+0.6W) (EQ. 16-14)
1 0.6 2 0.6 4 0.6
*******************************************************
PERFORM ANALYSIS PRINT STATICS CHECK
LOAD LIST 101 TO 104
PRINT MEMBER FORCES
PRINT SUPPORT REACTION
PRINT JOINT DISPLACEMENTS
UNIT INCHES KIP
PRINT MAXFORCE ENVELOPE
PRINT ALL
FINISH
```

Software licensed to Halcrow	Job No ?	Sheet No 1	Rev
	Part ROOF TRUSS B-1		
Job Title ROOF TRUSS B-1	Ref 1		
	By BY	Date 08/11/12	Chd
Client	File 3 - Truss B - 1.std	Date/Time 13-Aug-2012 15:14	

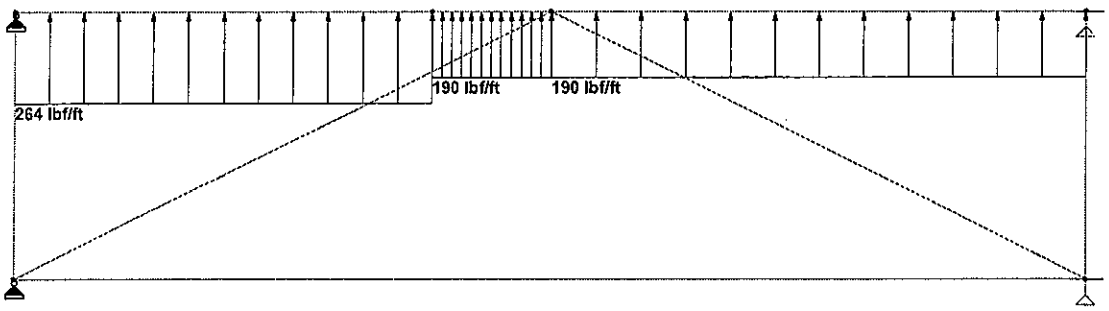

Load 4

Software licensed to Halcrow	Job No ?	Sheet No 1	Rev
	Part ROOF TRUSS B-1		
Job Title ROOF TRUSS B-1	Ref 1		
	By BY	Date 08/11/12	Chd
Client	File 3 - Truss B - 1.std	Date/Time 13-Aug-2012 15:46	

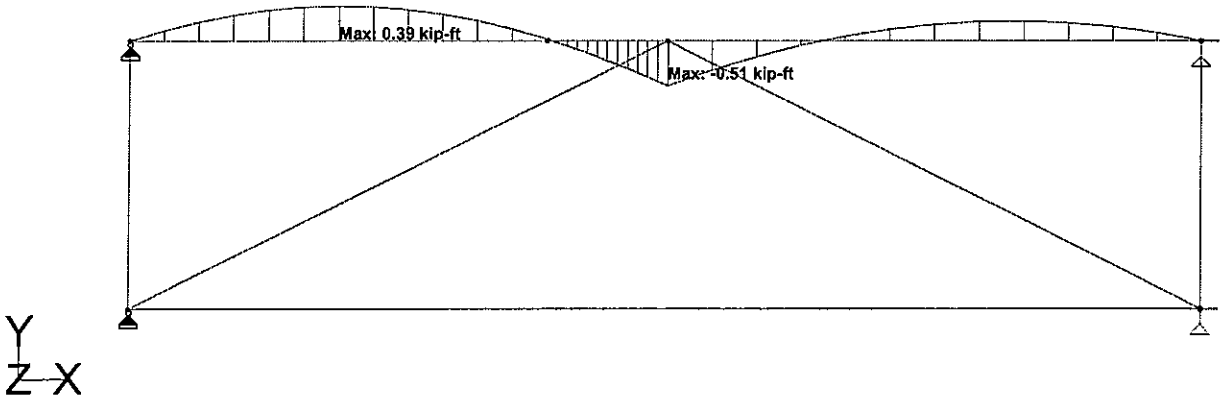

Load 104 : Bending Z
Moment - kip-ft

Software licensed to Halcrow	Job No ?	Sheet No 1	Rev
	Part ROOF TRUSS B-1		
Job Title ROOF TRUSS B-1	Ref 1		
	By BY	Date 08/11/12	Chd
Client	File 3 - Truss B - 1.std	Date/Time 13-Aug-2012 15:46	

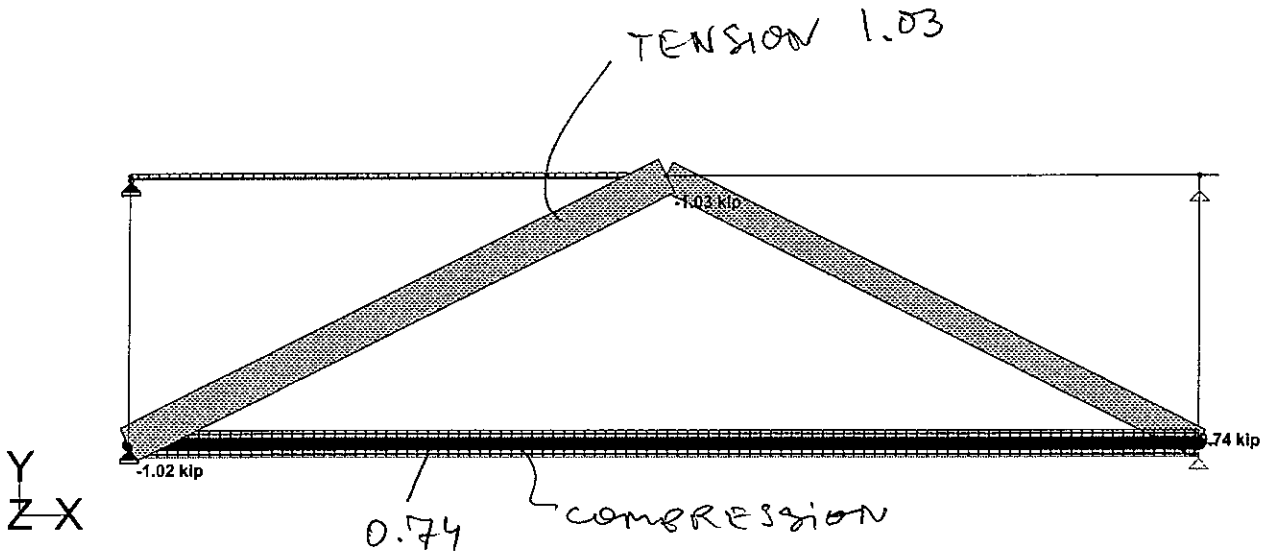

Load 104 : Axial Force
Force - kip

Software licensed to Halcrow	Job No ?	Sheet No 1	Rev
	Part ROOF TRUSS B-1		
Job Title ROOF TRUSS B-1	Ref 1		
	By BY	Date 08/11/12	Chd
Client	File 3 - Truss B - 1.std	Date/Time 13-Aug-2012 15:46	

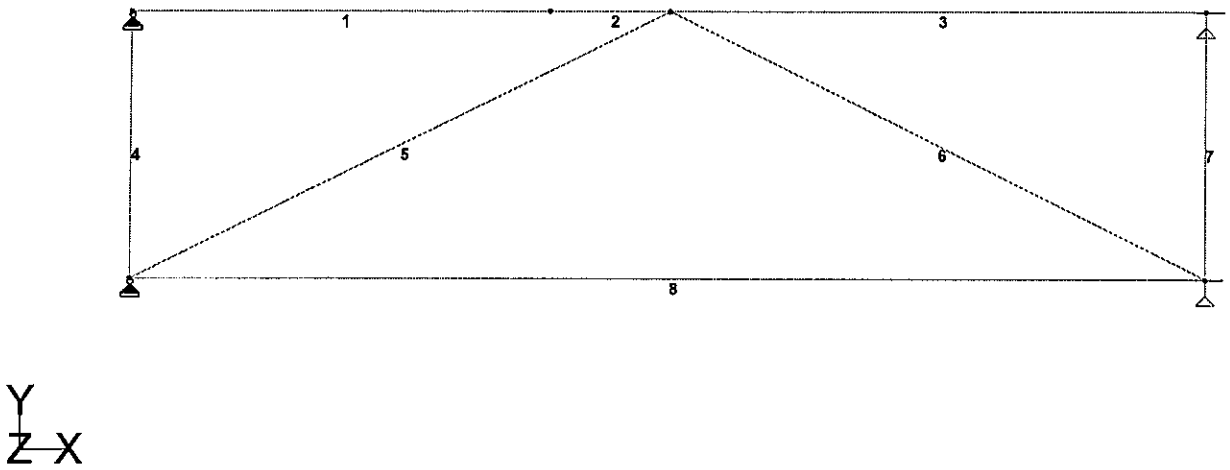

Load 1

Beam	L/C	Node	Axial Force (kip)	Shear-Y (kip)	Shear-Z (kip)	Torsion (kip*ft)	Moment-Y (kip*ft)	Moment-Z (kip*ft)
1	101	1	-0.10	0.14	0.00	0.00	0.00	-0.00
		2	0.10	0.15	0.00	0.00	0.00	-0.02
2	101	2	-0.10	-0.15	0.00	0.00	0.00	0.02
		3	0.10	0.23	0.00	0.00	0.00	-0.27
3	101	3	-0.00	0.23	0.00	0.00	0.00	0.27
		4	0.00	0.14	0.00	0.00	0.00	0.00
4	101	1	-0.00	0.00	0.00	0.00	0.00	0.00
		5	-0.00	0.00	0.00	0.00	0.00	0.00
5	101	3	0.58	0.00	0.00	0.00	0.00	0.00
		5	-0.58	0.00	0.00	0.00	0.00	0.00
6	101	3	0.46	0.00	0.00	0.00	0.00	0.00
		6	-0.47	0.00	0.00	0.00	0.00	0.00
7	101	4	-0.00	0.00	0.00	0.00	0.00	0.00
		6	-0.00	0.00	0.00	0.00	0.00	0.00
8	101	5	-0.42	0.02	0.00	0.00	0.00	0.00
		6	0.42	0.02	0.00	0.00	0.00	0.00

Beam	L/C	Node	Axial Force (kip)	Shear-Y (kip)	Shear-Z (kip)	Torsion (kip-ft)	Moment-Y (kip-ft)	Moment-Z (kip-ft)
1	104	1	0.18	-0.34	0.00	0.00	0.00	-0.00
		2	-0.18	-0.33	0.00	0.00	0.00	-0.02
2	104	2	0.18	0.33	0.00	0.00	0.00	0.02
		3	-0.18	-0.46	0.00	0.00	0.00	0.51
3	104	3	-0.00	-0.38	0.00	0.00	0.00	-0.51
		4	0.00	-0.21	0.00	0.00	0.00	0.00
4	104	1	-0.00	0.00	0.00	0.00	0.00	0.00
		5	-0.00	0.00	0.00	0.00	0.00	0.00
5	104	3	-1.03	0.00	0.00	0.00	0.00	0.00
		5	1.02	0.00	0.00	0.00	0.00	0.00
6	104	3	-0.83	0.00	0.00	0.00	0.00	0.00
		6	0.83	0.00	0.00	0.00	0.00	0.00
7	104	4	-0.00	0.00	0.00	0.00	0.00	0.00
		6	-0.00	0.00	0.00	0.00	0.00	0.00
8	104	5	0.74	0.01	0.00	0.00	0.00	0.00
		6	-0.74	0.01	0.00	0.00	0.00	0.00

Software licensed to Halcrow	Job No ?	Sheet No 1	Rev
	Part ROOF TRUSS B-1		
Job Title ROOF TRUSS B-1	Ref 1		
	By BY	Date 08/11/12	Chd
Client	File 3 - Truss B - 1.std	Date/Time 13-Aug-2012 15:46	

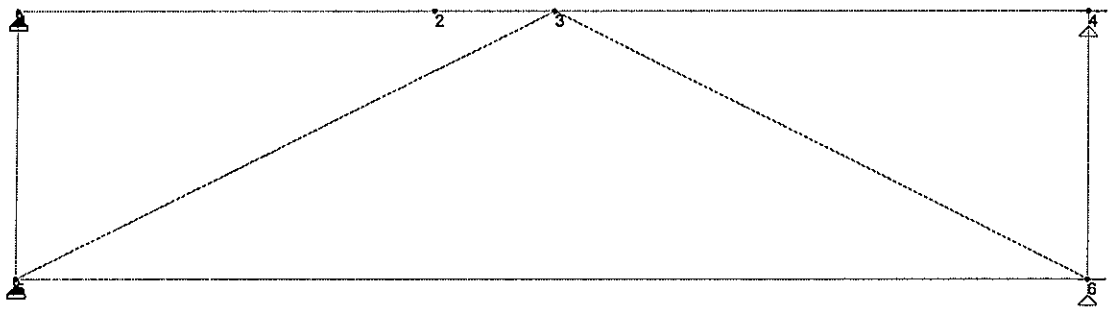

Load 1

JOINT DISPLACEMENT (INCH RADIANS) STRUCTURE TYPE = SPACE

JOINT	LOAD	X-TRANS	Y-TRANS	Z-TRANS	X-ROTAN	Y-ROTAN	Z-ROTAN
1	101	0.00000	0.00000	0.00000	0.00000	0.00000	-0.00462
	102	0.00000	0.00000	0.00000	0.00000	0.00000	0.01081
	103	0.00000	0.00000	0.00000	0.00000	0.00000	0.00550
	104	0.00000	0.00000	0.00000	0.00000	0.00000	0.01149
2	101	0.00060	-0.04673	0.00000	0.00000	0.00000	0.00274
	102	-0.00097	0.11715	0.00000	0.00000	0.00000	-0.00681
	103	-0.00039	0.06147	0.00000	0.00000	0.00000	-0.00356
	104	-0.00106	0.12408	0.00000	0.00000	0.00000	-0.00721
3	101	0.00077	-0.01691	0.00000	0.00000	0.00000	0.00000
	102	-0.00125	0.02753	0.00000	0.00000	0.00000	-0.00250
	103	-0.00051	0.01114	0.00000	0.00000	0.00000	-0.00188
	104	-0.00137	0.03007	0.00000	0.00000	0.00000	-0.00250
4	101	0.00077	0.00000	0.00000	0.00000	0.00000	0.00462
	102	-0.00125	0.00000	0.00000	0.00000	0.00000	-0.00545
	103	-0.00051	0.00000	0.00000	0.00000	0.00000	-0.00147
	104	-0.00137	0.00000	0.00000	0.00000	0.00000	-0.00613
5	101	0.00000	0.00000	0.00000	0.00000	0.00000	0.00000
	102	0.00000	0.00000	0.00000	0.00000	0.00000	0.00000
	103	0.00000	0.00000	0.00000	0.00000	0.00000	0.00000
	104	0.00000	0.00000	0.00000	0.00000	0.00000	0.00000
6	101	0.00303	0.00000	0.00000	0.00000	0.00000	0.00000
	102	-0.00493	0.00000	0.00000	0.00000	0.00000	0.00000
	103	-0.00200	0.00000	0.00000	0.00000	0.00000	0.00000
	104	-0.00539	0.00000	0.00000	0.00000	0.00000	0.00000

********** END OF LATEST ANALYSIS RESULT **********

```
 99. UNIT INCHES KIP
100. PRINT MAXFORCE ENVELOPE
```

ROOF TRUSS

B - 2

Software licensed to Halcrow	Job No ?	Sheet No 1	Rev
	Part ROOF TRUSS B-2		
Job Title ROOF TRUSS B-2	Ref 1		
	By BY	Date 08/11/12	Chd
Client	File 4 - Truss B - 2.std	Date/Time 13-Aug-2012 15:21	

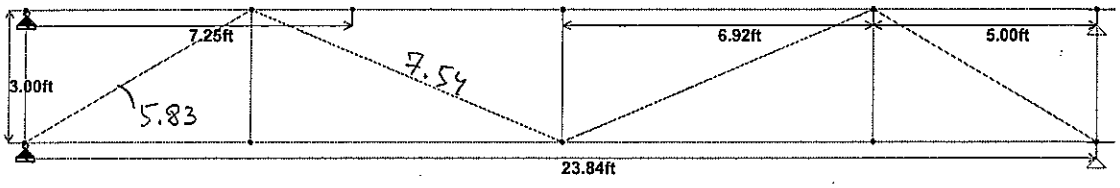

Load 1

Software licensed to Halcrow	Job No ?	Sheet No 1	Rev
	Part ROOF TRUSS B-2		
Job Title ROOF TRUSS B-2	Ref 1		
	By BY	Date 08/11/12	Chd
Client	File 4 - Truss B - 2.std	Date/Time 13-Aug-2012 15:59	

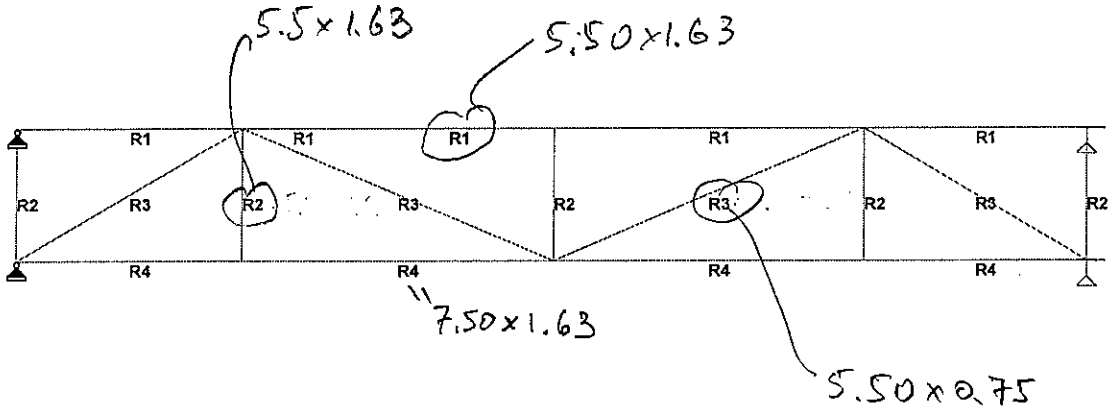

Load 1

```
STAAD SPACE DESIGN OF TRUSS
START JOB INFORMATION
JOB NAME ROOF TRUSS B-2
JOB NO ?
JOB PART ROOF TRUSS B-2
JOB REF 1
ENGINEER NAME BY
*                                          *********************************
*                                          *                               *
*                                          *                               *
*                                          *         ROOF TRUSS B-2        *
*                                          *                               *
*                                          *                               *
*                                          *********************************
ENGINEER DATE 08/11/12
END JOB INFORMATION
INPUT WIDTH 79
*
UNIT FEET KIP
JOINT COORDINATES
1 0 0 0; 2 5 0 0; 3 7.25 0 0; 4 11.92 0 0; 5 18.84 0 0; 6 23.84 0 0;
7 0 -3 0; 8 5 -3 0;  9 11.92 -3 0; 10 18.84 -3 0; 11 23.84 -3 0;

*
MEMBER INCIDENCES
1 1 2; 2 2 3; 3 3 4; 4 4 5; 5 5 6;
6 1 7; 7 2 7; 8 2 8; 9 2 9; 10 4 9; 11 5 9; 12 5 10; 13 5 11; 14 6 11;
15 7 8; 16 8 9; 17 9 10; 18 10 11;
*
*
*
MEMBER TRUSS
6 TO 14
*
***********CONSTANS********
*
UNIT INCHES KIP
DEFINE MATERIAL START
*
ISOTROPIC TIMBER
E 1600
POISSON 0.3
DENSITY 1.85e-005
*ALPHA 5.5e-006
END DEFINE MATERIAL
*
CONSTANTS
MATERIAL TIMBER ALL
*
MEMBER PROPERTY AMERICAN
1 TO 5 PRIS YD 5.5 ZD 1.625
6 8 10 12 14 PRIS YD 5.5 ZD 1.625
7 9 11 13 PRIS YD 5.5 ZD 0.75
15 TO 18 PRIS YD 7.5 ZD 1.625
************************
SUPPORTS
1 7 PINNED
6 11 FIXED BUT FX MY MZ
*
*******************************************************
UNIT FEET POUND
LOAD 1 S/W
SELFWEIGHT Y -1
*
LOAD 2 DR (ROOF DL)
*Truss c/c 2'
*Load 2' x 11 psf = 22 p/ft
MEMBER LOAD
1 TO 5 UNI GY -22
*
LOAD 3 LR (ROOF LL)
```

```
LOAD 3 LR (ROOF LL)
*Truss c/c 2'
*Load  2' x 20 psf = 40 p/ft
MEMBER LOAD
1 TO 5 UNI GY -40
*
LOAD 4 WIND UPLIFT
*Truss c/c 2'
*Load  2' x  95 psf = 190 p/ft (Zone 1)
*Load  2' x 132 psf = 264 p/ft (Zone 2)
MEMBER LOAD
1 2 UNI GY 264
3 4 5 UNI GY 190
*
*******************************************************
LOAD COMB 101 (DL+LR) (EQ. 16-10)
1 1.0 2 1.0 3 1.0
*
LOAD COMB 102 (DL+0.6W) (EQ. 16-12)
1 1.0 2 1.0 4 0.6
*
LOAD COMB 103 (DL+0.45W+0.75LR) (EQ. 16-13)
1 1.0 2 1.0 4 0.45 3 0.75
*
LOAD COMB 104 (0.6DL+0.6W) (EQ. 16-14)
1 0.6 2 0.6 4 0.6
*******************************************************
PERFORM ANALYSIS PRINT STATICS CHECK
LOAD LIST 101 TO 104
PRINT MEMBER FORCES
PRINT SUPPORT REACTION
PRINT JOINT DISPLACEMENTS
UNIT INCHES KIP
PRINT MAXFORCE ENVELOPE
PRINT ALL
FINISH
```

Software licensed to Halcrow	Job No ?	Sheet No 1	Rev
	Part ROOF TRUSS B-2		
Job Title ROOF TRUSS B-2	Ref 1		
	By BY	Date 08/11/12	Chd
Client	File 4 - Truss B - 2.std	Date/Time 13-Aug-2012 15:21	

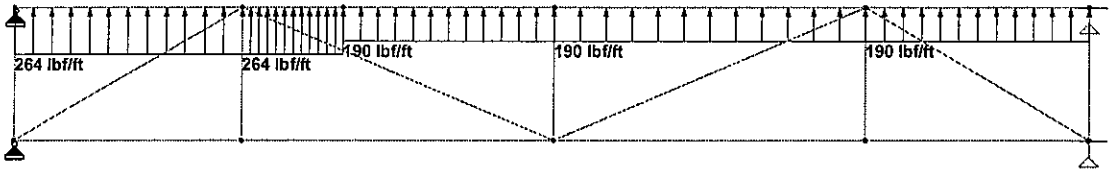

Load 4

Software licensed to Halcrow	Job No ?	Sheet No 1	Rev
	Part ROOF TRUSS B-2		
Job Title ROOF TRUSS B-2	Ref 1		
	By BY	Date 08/11/12	Chd
Client	File 4 - Truss B - 2.std	Date/Time 13-Aug-2012 15:21	

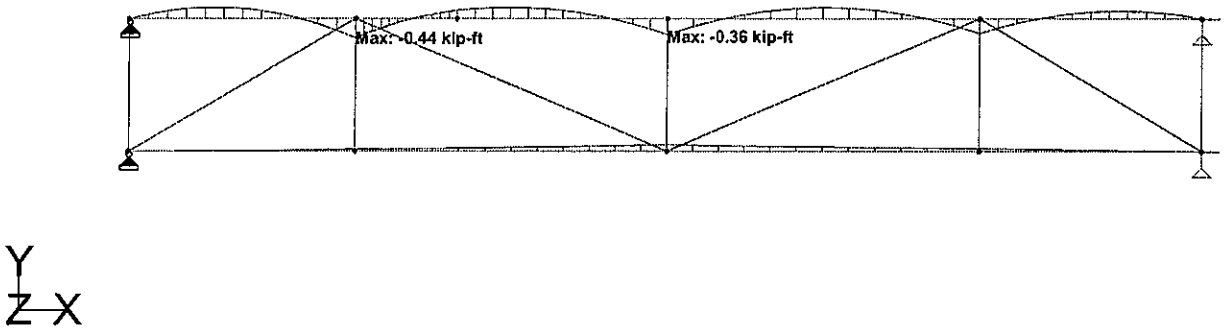

Load 104 : Bending Z
Moment - kip-ft

Software licensed to Halcrow	Job No ?	Sheet No 1	Rev
	Part ROOF TRUSS B-2		
Job Title ROOF TRUSS B-2	Ref 1		
	By BY	Date 08/11/12	Chd
Client	File 4 - Truss B - 2.std	Date/Time 13-Aug-2012 15:36	

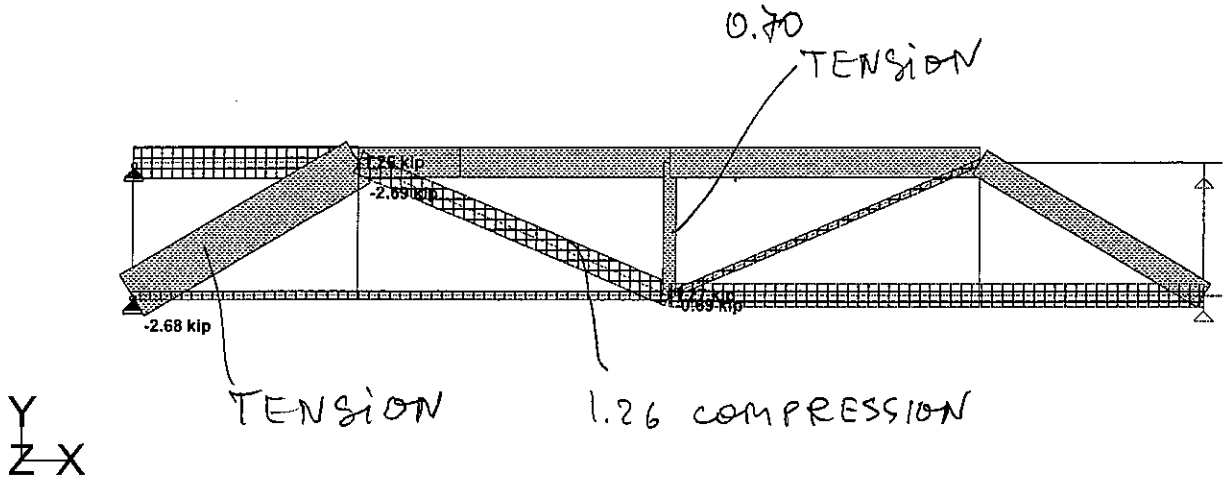

Load 104 : Axial Force
Force - kip

Software licensed to Halcrow	Job No ?	Sheet No 1	Rev
	Part ROOF TRUSS B-2		
Job Title ROOF TRUSS B-2	Ref 1		
	By BY	Date 08/11/12	Chd
Client	File 4 - Truss B - 2.std	Date/Time 13-Aug-2012 15:59	

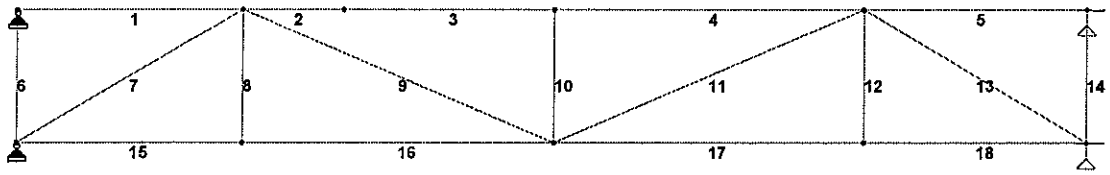

Load 1

Beam	L/C	Node	Axial Force (kip)	Shear-Y (kip)	Shear-Z (kip)	Torsion (kip*ft)	Moment-Y (kip*ft)	Moment-Z (kip*ft)
1	101	1	-1.13	0.11	0.00	0.00	0.00	-0.00
		2	1.13	0.21	0.00	0.00	0.00	-0.23
2	101	2	1.10	0.22	0.00	0.00	0.00	0.23
		3	-1.10	-0.08	0.00	0.00	0.00	0.11
3	101	3	1.10	0.08	0.00	0.00	0.00	-0.11
		4	-1.10	0.22	0.00	0.00	0.00	-0.23
4	101	4	1.10	0.22	0.00	0.00	0.00	0.23
		5	-1.10	0.22	0.00	0.00	0.00	-0.21
5	101	5	0.00	0.20	0.00	0.00	0.00	0.21
		6	0.00	0.12	0.00	0.00	0.00	0.00
6	101	1	-0.00	0.00	0.00	0.00	0.00	0.00
		7	-0.00	0.00	0.00	0.00	0.00	0.00
7	101	2	1.62	0.00	0.00	0.00	0.00	0.00
		7	-1.62	0.00	0.00	0.00	0.00	0.00
8	101	2	-0.04	0.00	0.00	0.00	0.00	0.00
		8	0.03	0.00	0.00	0.00	0.00	0.00
9	101	2	-0.92	0.00	0.00	0.00	0.00	0.00
		9	0.92	0.00	0.00	0.00	0.00	0.00
10	101	4	0.44	0.00	0.00	0.00	0.00	0.00
		9	-0.45	0.00	0.00	0.00	0.00	0.00
11	101	5	-0.22	0.00	0.00	0.00	0.00	0.00
		9	0.22	0.00	0.00	0.00	0.00	0.00
12	101	5	-0.02	0.00	0.00	0.00	0.00	0.00
		10	0.02	0.00	0.00	0.00	0.00	0.00
13	101	5	1.05	0.00	0.00	0.00	0.00	0.00
		11	-1.05	0.00	0.00	0.00	0.00	0.00
14	101	6	-0.00	0.00	0.00	0.00	0.00	0.00
		11	-0.00	0.00	0.00	0.00	0.00	0.00
15	101	7	-0.26	0.01	0.00	0.00	0.00	0.00
		8	0.26	0.01	0.00	0.00	0.00	-0.00
16	101	8	-0.26	0.02	0.00	0.00	0.00	0.00
		9	0.26	-0.00	0.00	0.00	0.00	0.09
17	101	9	-0.90	0.00	0.00	0.00	0.00	-0.09
		10	0.90	0.02	0.00	0.00	0.00	0.03
18	101	10	-0.90	0.00	0.00	0.00	0.00	-0.03
		11	0.90	0.01	0.00	0.00	0.00	0.00

Beam	L/C	Node	Axial Force (kip)	Shear-Y (kip)	Shear-Z (kip)	Torsion (kip-ft)	Moment-Y (kip-ft)	Moment-Z (kip-ft)
1	104	1	1.81	-0.27	0.00	0.00	0.00	-0.00
		2	-1.81	-0.45	0.00	0.00	0.00	0.44
2	104	2	-1.65	-0.44	0.00	0.00	0.00	-0.44
		3	1.65	0.12	0.00	0.00	0.00	-0.18
3	104	3	-1.65	-0.12	0.00	0.00	0.00	0.18
		4	1.65	-0.35	0.00	0.00	0.00	0.36
4	104	4	-1.65	-0.35	0.00	0.00	0.00	-0.36
		5	1.65	-0.34	0.00	0.00	0.00	0.33
5	104	5	0.00	-0.32	0.00	0.00	0.00	-0.33
		6	0.00	-0.18	0.00	0.00	0.00	0.00
6	104	1	-0.00	0.00	0.00	0.00	0.00	0.00
		7	-0.00	0.00	0.00	0.00	0.00	0.00
7	104	2	-2.69	0.00	0.00	0.00	0.00	0.00
		7	2.68	0.00	0.00	0.00	0.00	0.00
8	104	2	-0.01	0.00	0.00	0.00	0.00	0.00
		8	0.00	0.00	0.00	0.00	0.00	0.00
9	104	2	1.26	0.00	0.00	0.00	0.00	0.00
		9	-1.27	0.00	0.00	0.00	0.00	0.00
10	104	4	-0.70	0.00	0.00	0.00	0.00	0.00
		9	0.69	0.00	0.00	0.00	0.00	0.00
11	104	5	0.37	0.00	0.00	0.00	0.00	0.00
		9	-0.37	0.00	0.00	0.00	0.00	0.00
12	104	5	-0.01	0.00	0.00	0.00	0.00	0.00
		10	0.01	0.00	0.00	0.00	0.00	0.00
13	104	5	-1.53	0.00	0.00	0.00	0.00	0.00
		11	1.53	0.00	0.00	0.00	0.00	0.00
14	104	6	-0.00	0.00	0.00	0.00	0.00	0.00
		11	-0.00	0.00	0.00	0.00	0.00	0.00
15	104	7	0.49	-0.00	0.00	0.00	0.00	0.00
		8	-0.49	0.01	0.00	0.00	0.00	-0.04
16	104	8	0.49	-0.01	0.00	0.00	0.00	0.04
		9	-0.49	0.02	0.00	0.00	0.00	-0.15
17	104	9	1.31	0.02	0.00	0.00	0.00	0.15
		10	-1.31	-0.01	0.00	0.00	0.00	-0.07
18	104	10	1.31	0.02	0.00	0.00	0.00	0.07
		11	-1.31	-0.01	0.00	0.00	0.00	0.00

Software licensed to Halcrow	Job No ?	Sheet No 1	Rev
	Part ROOF TRUSS B-2		
Job Title ROOF TRUSS B-2	Ref 1		
	By BY	Date 08/11/12	Chd
Client	File 4 - Truss B - 2.std	Date/Time 14-Aug-2012 08:32	

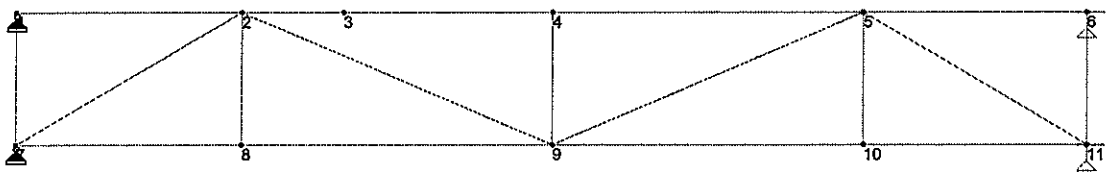

Load 1

JOINT DISPLACEMENT (INCH RADIANS) STRUCTURE TYPE = SPACE

JOINT	LOAD	X-TRANS	Y-TRANS	Z-TRANS	X-ROTAN	Y-ROTAN	Z-ROTAN
1	101	0.00000	0.00000	0.00000	0.00000	0.00000	-0.00128
	102	0.00000	0.00000	0.00000	0.00000	0.00000	0.00247
	103	0.00000	0.00000	0.00000	0.00000	0.00000	0.00115
	104	0.00000	0.00000	0.00000	0.00000	0.00000	0.00267
2	101	0.00476	-0.04138	0.00000	0.00000	0.00000	-0.00088
	102	-0.00681	0.06112	0.00000	0.00000	0.00000	0.00097
	103	-0.00252	0.02341	0.00000	0.00000	0.00000	0.00025
	104	-0.00760	0.06801	0.00000	0.00000	0.00000	0.00112
3	101	0.00268	-0.07647	0.00000	0.00000	0.00000	-0.00116
	102	-0.00403	0.10856	0.00000	0.00000	0.00000	0.00157
	103	-0.00157	0.03962	0.00000	0.00000	0.00000	0.00054
	104	-0.00448	0.12100	0.00000	0.00000	0.00000	0.00175
4	101	-0.00165	-0.08092	0.00000	0.00000	0.00000	-0.00008
	102	0.00173	0.10911	0.00000	0.00000	0.00000	0.00003
	103	0.00040	0.03796	0.00000	0.00000	0.00000	-0.00002
	104	0.00200	0.12256	0.00000	0.00000	0.00000	0.00004
5	101	-0.00806	-0.04919	0.00000	0.00000	0.00000	0.00091
	102	0.01026	0.06467	0.00000	0.00000	0.00000	-0.00122
	103	0.00333	0.02185	0.00000	0.00000	0.00000	-0.00042
	104	0.01160	0.07286	0.00000	0.00000	0.00000	-0.00137
6	101	-0.00806	0.00000	0.00000	0.00000	0.00000	0.00145
	102	0.01026	0.00000	0.00000	0.00000	0.00000	-0.00196
	103	0.00333	0.00000	0.00000	0.00000	0.00000	-0.00067
	104	0.01160	0.00000	0.00000	0.00000	0.00000	-0.00219
7	101	0.00000	0.00000	0.00000	0.00000	0.00000	-0.00071
	102	0.00000	0.00000	0.00000	0.00000	0.00000	0.00106
	103	0.00000	0.00000	0.00000	0.00000	0.00000	0.00041
	104	0.00000	0.00000	0.00000	0.00000	0.00000	0.00118
8	101	0.00079	-0.04146	0.00000	0.00000	0.00000	-0.00067
	102	-0.00138	0.06108	0.00000	0.00000	0.00000	0.00092
	103	-0.00061	0.02335	0.00000	0.00000	0.00000	0.00032
	104	-0.00151	0.06799	0.00000	0.00000	0.00000	0.00103
9	101	0.00189	-0.07979	0.00000	0.00000	0.00000	-0.00008
	102	-0.00330	0.10752	0.00000	0.00000	0.00000	0.00004
	103	-0.00145	0.03740	0.00000	0.00000	0.00000	-0.00002
	104	-0.00361	0.12081	0.00000	0.00000	0.00000	0.00005
10	101	0.00572	-0.04924	0.00000	0.00000	0.00000	0.00071
	102	-0.00824	0.06462	0.00000	0.00000	0.00000	-0.00093
	103	-0.00308	0.02179	0.00000	0.00000	0.00000	-0.00032
	104	-0.00919	0.07283	0.00000	0.00000	0.00000	-0.00105
11	101	0.00849	0.00000	0.00000	0.00000	0.00000	0.00089
	102	-0.01181	0.00000	0.00000	0.00000	0.00000	-0.00114
	103	-0.00426	0.00000	0.00000	0.00000	0.00000	-0.00037
	104	-0.01322	0.00000	0.00000	0.00000	0.00000	-0.00129

ROOF TRUSS

Software licensed to Halcrow	Job No ?	Sheet No 1	Rev
	Part ROOF TRUSS B-3		
Job Title ROOF TRUSS B-3	Ref 1		
	By YB	Date 08/11/12	Chd
Client	File 5 - Truss B - 3.std	Date/Time 14-Aug-2012 07:25	

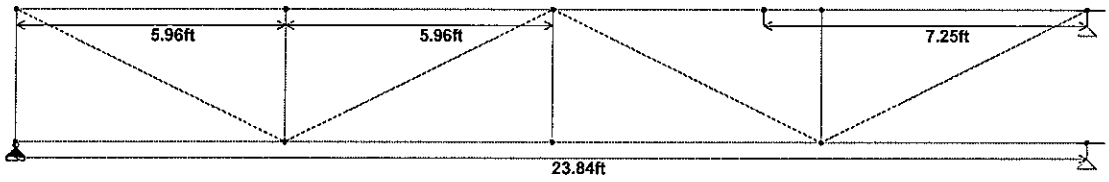

Load 1

Software licensed to Halcrow	Job No ?	Sheet No 1	Rev
	Part ROOF TRUSS B-3		
Job Title ROOF TRUSS B-3	Ref 1		
	By YB	Date 08/11/12	Chd
Client	File 5 - Truss B - 3.std	Date/Time 14-Aug-2012 07:25	

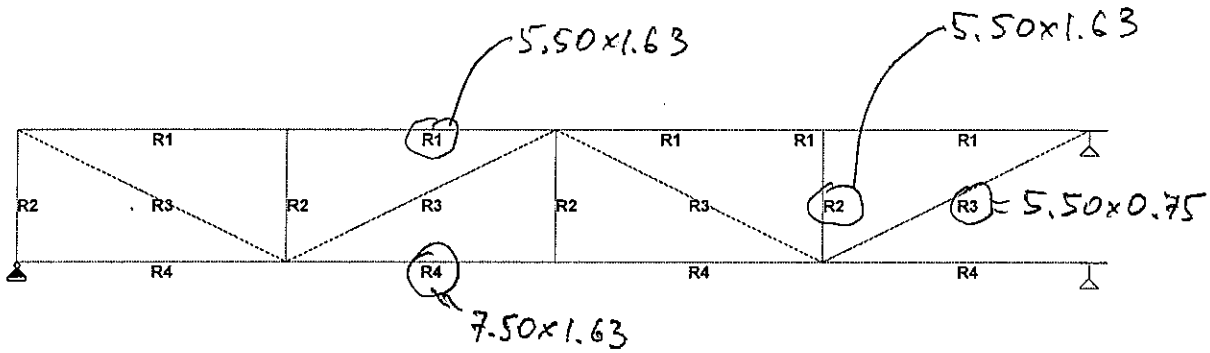

Load 1

```
STAAD SPACE DESIGN OF TRUSS
START JOB INFORMATION
JOB NAME ROOF TRUSS B-3
JOB NO ?
JOB PART ROOF TRUSS B-3
JOB REF 1
ENGINEER NAME YB
*                                        ********************************
*                                        *                              *
*                                        *                              *
*                                        *        ROOF  TRUSS B-3       *
*                                        *                              *
*                                        *                              *
*                                        ********************************
ENGINEER DATE 08/11/12
END JOB INFORMATION
INPUT WIDTH 79
*
UNIT FEET KIP
JOINT COORDINATES
1 0 0 0; 2 5.96 0 0; 3 11.92 0 0; 4 16.59 0 0; 5 17.88 0 0; 6 23.84 0 0;
7 0 -3 0; 8 5.96 -3 0; 9 11.92 -3 0; 10 17.88 -3 0; 11 23.84 -3 0;
*
MEMBER INCIDENCES
1 1 2; 2 2 3; 3 3 4; 4 4 5; 5 5 6;
6 1 7; 7 1 8; 8 2 8; 9 3 8; 10 3 9; 11 3 10;
12 5 10; 13 6 10; 14 7 8; 15 8 9; 16 9 10; 17 10 11;
*
*
*
MEMBER TRUSS
6 TO 13
*
***********CONSTANS********
*
UNIT INCHES KIP
DEFINE MATERIAL START
*
ISOTROPIC TIMBER
E 1600
POISSON 0.3
DENSITY 1.85e-005
*ALPHA 5.5e-006
END DEFINE MATERIAL
*
CONSTANTS
MATERIAL TIMBER ALL
*
MEMBER PROPERTY AMERICAN
1 TO 5 PRIS YD 5.5 ZD 1.625
6 8 10 12  PRIS YD 5.5 ZD 1.625
7 9 11 13 PRIS YD 5.5 ZD 0.75
14 TO 17 PRIS YD 7.5 ZD 1.625
************************
SUPPORTS
7 PINNED
6 11 FIXED BUT FX MY MZ
*
*******************************************************
UNIT FEET POUND
LOAD 1 S/W
SELFWEIGHT Y -1
*
LOAD 2 DR (ROOF DL)
*Truss c/c 2'
*Load 2' x 11 psf = 22 p/ft
MEMBER LOAD
1 TO 5 UNI GY -22
*
LOAD 3 LR (ROOF LL)
*Truss c/c 2'
```

```
*Truss c/c 2'
*Load  2' x 20 psf = 40 p/ft
MEMBER LOAD
1 TO 5 UNI GY -40
*
LOAD 4 WIND UPLIFT
*Truss c/c 2'
*Load  2' x  95 psf = 190 p/ft (Zone 1)
*Load  2' x 132 psf = 264 p/ft (Zone 2)
MEMBER LOAD
4 5 UNI GY 264
1 2 3 UNI GY 190
*
*******************************************************
LOAD COMB 101 (DL+LR) (EQ. 16-10)
1 1.0 2 1.0 3 1.0
*
LOAD COMB 102 (DL+0.6W) (EQ. 16-12)
1 1.0 2 1.0 4 0.6
*
LOAD COMB 103 (DL+0.45W+0.75LR) (EQ. 16-13)
1 1.0 2 1.0 4 0.45 3 0.75
*
LOAD COMB 104 (0.6DL+0.6W) (EQ. 16-14)
1 0.6 2 0.6 4 0.6
*******************************************************
PERFORM ANALYSIS PRINT STATICS CHECK
LOAD LIST 101 TO 104
PRINT MEMBER FORCES
PRINT SUPPORT REACTION
PRINT JOINT DISPLACEMENTS
UNIT INCHES KIP
PRINT MAXFORCE ENVELOPE
PRINT ALL
FINISH
```

Software licensed to Halcrow	Job No ?	Sheet No 1	Rev
	Part ROOF TRUSS B-3		
Job Title ROOF TRUSS B-3	Ref 1		
	By YB	Date 08/11/12	Chd
Client	File 5 - Truss B - 3.std	Date/Time 14-Aug-2012 07:25	

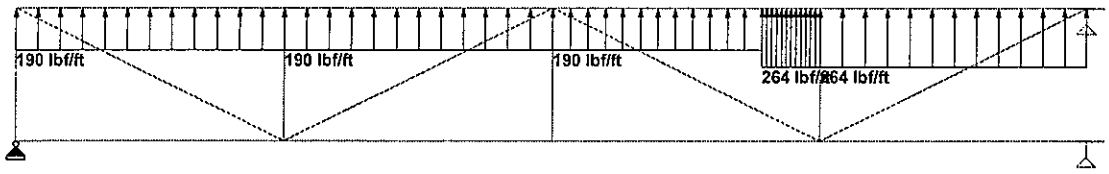

Load 4

Software licensed to Halcrow	Job No ?	Sheet No 1	Rev
	Part ROOF TRUSS B-3		
Job Title ROOF TRUSS B-3	Ref 1		
	By YB	Date 08/11/12	Chd
Client	File 5 - Truss B - 3.std	Date/Time 14-Aug-2012 07:25	

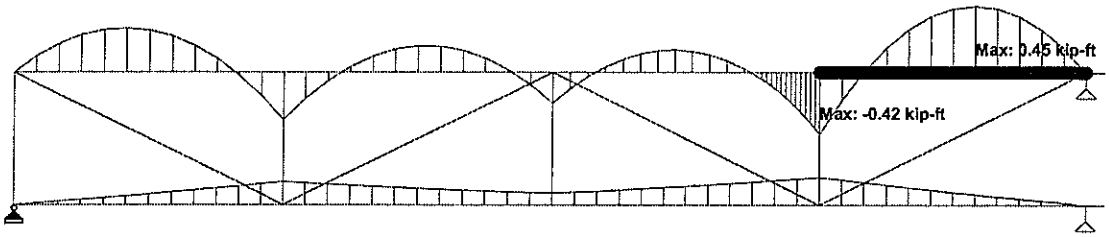

Load 104 : Bending Z
Moment - kip-ft

Software licensed to Halcrow	Job No ?	Sheet No 1	Rev
	Part ROOF TRUSS B-3		
Job Title ROOF TRUSS B-3	Ref 1		
	By YB	Date 08/11/12	Chd
Client	File 5 - Truss B - 3.std	Date/Time 14-Aug-2012 07:25	

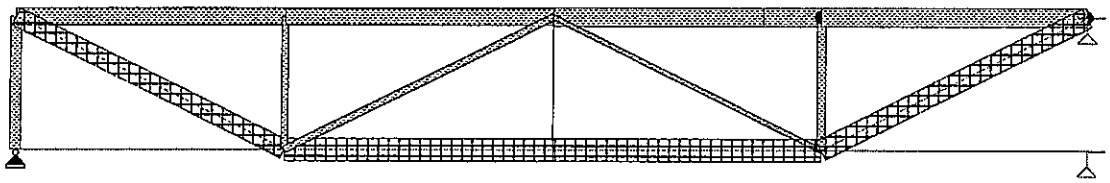

Load 104 : Axial Force

Software licensed to Halcrow	Job No ?	Sheet No 1	Rev
	Part ROOF TRUSS B-3		
Job Title ROOF TRUSS B-3	Ref 1		
	By YB	Date 08/11/12	Chd
Client	File 5 - Truss B - 3.std	Date/Time 14-Aug-2012 07:25	

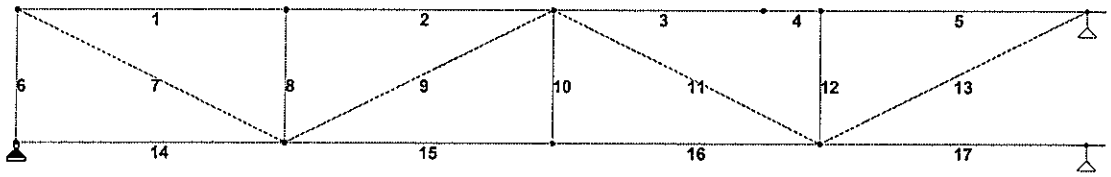

Load 104

Beam	L/C	Node	Axial Force (kip)	Shear-Y (kip)	Shear-Z (kip)	Torsion (kip*ft)	Moment-Y (kip*ft)	Moment-Z (kip*ft)
1	101	1	1.26	0.16	0.00	0.00	0.00	0.00
		2	-1.26	0.22	0.00	0.00	0.00	-0.20
2	101	2	1.26	0.20	0.00	0.00	0.00	0.20
		3	-1.26	0.18	0.00	0.00	0.00	-0.14
3	101	3	1.26	0.18	0.00	0.00	0.00	0.14
		4	-1.26	0.12	0.00	0.00	0.00	0.00
4	101	4	1.26	-0.12	0.00	0.00	0.00	-0.00
		5	-1.26	0.20	0.00	0.00	0.00	-0.20
5	101	5	1.26	0.22	0.00	0.00	0.00	0.20
		6	-1.26	0.16	0.00	0.00	0.00	-0.00
6	101	1	0.79	0.00	0.00	0.00	0.00	0.00
		7	-0.80	0.00	0.00	0.00	0.00	0.00
7	101	1	-1.41	0.00	0.00	0.00	0.00	0.00
		8	1.41	0.00	0.00	0.00	0.00	0.00
8	101	2	0.42	0.00	0.00	0.00	0.00	0.00
		8	-0.43	0.00	0.00	0.00	0.00	0.00
9	101	3	0.45	0.00	0.00	0.00	0.00	0.00
		8	-0.45	0.00	0.00	0.00	0.00	0.00
10	101	3	-0.04	0.00	0.00	0.00	0.00	0.00
		9	0.03	0.00	0.00	0.00	0.00	0.00
11	101	3	0.45	0.00	0.00	0.00	0.00	0.00
		10	-0.45	0.00	0.00	0.00	0.00	0.00
12	101	5	0.42	0.00	0.00	0.00	0.00	0.00
		10	-0.43	0.00	0.00	0.00	0.00	0.00
13	101	6	-1.41	0.00	0.00	0.00	0.00	0.00
		10	1.41	0.00	0.00	0.00	0.00	0.00
14	101	7	-0.00	0.02	0.00	0.00	0.00	0.00
		8	0.00	-0.01	0.00	0.00	0.00	0.09
15	101	8	-1.66	0.00	0.00	0.00	0.00	-0.09
		9	1.66	0.01	0.00	0.00	0.00	0.05
16	101	9	-1.66	0.01	0.00	0.00	0.00	-0.05
		10	1.66	0.00	0.00	0.00	0.00	0.09
17	101	10	-0.00	-0.01	0.00	0.00	0.00	-0.09
		11	0.00	0.02	0.00	0.00	0.00	0.00

Beam	L/C	Node	Axial Force (kip)	Shear-Y (kip)	Shear-Z (kip)	Torsion (kip-ft)	Moment-Y (kip-ft)	Moment-Z (kip-ft)
1	104	1	-1.87	-0.24	0.00	0.00	0.00	-0.00
		2	1.87	-0.35	0.00	0.00	0.00	0.32
2	104	2	-1.87	-0.32	0.00	0.00	0.00	-0.32
		3	1.87	-0.28	0.00	0.00	0.00	0.21
3	104	3	-2.08	-0.27	0.00	0.00	0.00	-0.21
		4	2.08	-0.20	0.00	0.00	0.00	0.04
4	104	4	-2.08	0.20	0.00	0.00	0.00	-0.04
		5	2.08	-0.38	0.00	0.00	0.00	0.42
5	104	5	-2.08	-0.50	0.00	0.00	0.00	-0.42
		6	2.08	-0.36	0.00	0.00	0.00	0.00
6	104	1	-1.18	0.00	0.00	0.00	0.00	0.00
		7	1.18	0.00	0.00	0.00	0.00	0.00
7	104	1	2.09	0.00	0.00	0.00	0.00	0.00
		8	-2.09	0.00	0.00	0.00	0.00	0.00
8	104	2	-0.67	0.00	0.00	0.00	0.00	0.00
		8	0.66	0.00	0.00	0.00	0.00	0.00
9	104	3	-0.74	0.00	0.00	0.00	0.00	0.00
		8	0.74	0.00	0.00	0.00	0.00	0.00
10	104	3	0.02	0.00	0.00	0.00	0.00	0.00
		9	-0.02	0.00	0.00	0.00	0.00	0.00
11	104	3	-0.51	0.00	0.00	0.00	0.00	0.00
		10	0.51	0.00	0.00	0.00	0.00	0.00
12	104	5	-0.88	0.00	0.00	0.00	0.00	0.00
		10	0.88	0.00	0.00	0.00	0.00	0.00
13	104	6	2.32	0.00	0.00	0.00	0.00	0.00
		10	-2.32	0.00	0.00	0.00	0.00	0.00
14	104	7	-0.00	-0.02	0.00	0.00	0.00	0.00
		8	0.00	0.03	0.00	0.00	0.00	-0.16
15	104	8	2.53	0.02	0.00	0.00	0.00	0.16
		9	-2.53	-0.01	0.00	0.00	0.00	-0.08
16	104	9	2.53	-0.01	0.00	0.00	0.00	0.08
		10	-2.53	0.02	0.00	0.00	0.00	-0.19
17	104	10	-0.00	0.04	0.00	0.00	0.00	0.19
		11	0.00	-0.03	0.00	0.00	0.00	-0.00

Software licensed to Halcrow	Job No ?	Sheet No 1	Rev
	Part ROOF TRUSS B-3		
Job Title ROOF TRUSS B-3	Ref 1		
	By YB	Date 08/11/12	Chd
Client	File 5 - Truss B - 3.std	Date/Time 14-Aug-2012 07:25	

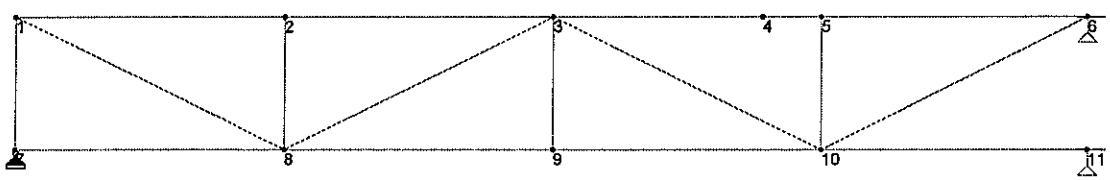

Load 1

JOINT DISPLACEMENT (INCH RADIANS) STRUCTURE TYPE = SPACE

JOINT	LOAD	X-TRANS	Y-TRANS	Z-TRANS	X-ROTAN	Y-ROTAN	Z-ROTAN
1	101	0.01840	-0.00200	0.00000	0.00000	0.00000	-0.00252
	102	-0.02505	0.00264	0.00000	0.00000	0.00000	0.00344
	103	-0.00883	0.00089	0.00000	0.00000	0.00000	0.00119
	104	-0.02812	0.00297	0.00000	0.00000	0.00000	0.00384
2	101	0.01212	-0.07760	0.00000	0.00000	0.00000	-0.00041
	102	-0.01675	0.10410	0.00000	0.00000	0.00000	0.00057
	103	-0.00600	0.03603	0.00000	0.00000	0.00000	0.00022
	104	-0.01877	0.11702	0.00000	0.00000	0.00000	0.00065
3	101	0.00583	-0.10022	0.00000	0.00000	0.00000	0.00001
	102	-0.00844	0.13723	0.00000	0.00000	0.00000	-0.00007
	103	-0.00317	0.04866	0.00000	0.00000	0.00000	-0.00005
	104	-0.00941	0.15395	0.00000	0.00000	0.00000	-0.00007
4	101	0.00090	-0.08860	0.00000	0.00000	0.00000	0.00088
	102	-0.00113	0.12147	0.00000	0.00000	0.00000	-0.00095
	103	-0.00036	0.04306	0.00000	0.00000	0.00000	-0.00023
	104	-0.00128	0.13620	0.00000	0.00000	0.00000	-0.00109
5	101	-0.00046	-0.07665	0.00000	0.00000	0.00000	0.00042
	102	0.00089	0.11153	0.00000	0.00000	0.00000	0.00007
	103	0.00042	0.04212	0.00000	0.00000	0.00000	0.00028
	104	0.00096	0.12430	0.00000	0.00000	0.00000	0.00000
6	101	-0.00675	0.00000	0.00000	0.00000	0.00000	0.00254
	102	0.01022	0.00000	0.00000	0.00000	0.00000	-0.00477
	103	0.00401	0.00000	0.00000	0.00000	0.00000	-0.00217
	104	0.01134	0.00000	0.00000	0.00000	0.00000	-0.00517
7	101	0.00000	0.00000	0.00000	0.00000	0.00000	-0.00125
	102	0.00000	0.00000	0.00000	0.00000	0.00000	0.00162
	103	0.00000	0.00000	0.00000	0.00000	0.00000	0.00054
	104	0.00000	0.00000	0.00000	0.00000	0.00000	0.00183
8	101	0.00000	-0.07652	0.00000	0.00000	0.00000	-0.00074
	102	0.00000	0.10259	0.00000	0.00000	0.00000	0.00102
	103	0.00000	0.03550	0.00000	0.00000	0.00000	0.00036
	104	0.00000	0.11535	0.00000	0.00000	0.00000	0.00114
9	101	0.00608	-0.10030	0.00000	0.00000	0.00000	0.00001
	102	-0.00826	0.13726	0.00000	0.00000	0.00000	0.00007
	103	-0.00290	0.04864	0.00000	0.00000	0.00000	0.00006
	104	-0.00928	0.15400	0.00000	0.00000	0.00000	0.00007
10	101	0.01216	-0.07558	0.00000	0.00000	0.00000	0.00074
	102	-0.01652	0.10948	0.00000	0.00000	0.00000	-0.00102
	103	-0.00581	0.04118	0.00000	0.00000	0.00000	-0.00036
	104	-0.01855	0.12208	0.00000	0.00000	0.00000	-0.00114
11	101	0.01216	0.00000	0.00000	0.00000	0.00000	0.00123
	102	-0.01652	0.00000	0.00000	0.00000	0.00000	-0.00176
	103	-0.00581	0.00000	0.00000	0.00000	0.00000	-0.00066
	104	-0.01855	0.00000	0.00000	0.00000	0.00000	-0.00197

ROOF TRUSS

Software licensed to Halcrow	Job No ?	Sheet No 1	Rev
	Part ROOF TRUSS B-4		
Job Title ROOF TRUSS B-4	Ref 1		
	By YB	Date 08/11/12	Chd
Client	File 6 - Truss B - 4.std	Date/Time 14-Aug-2012 07:38	

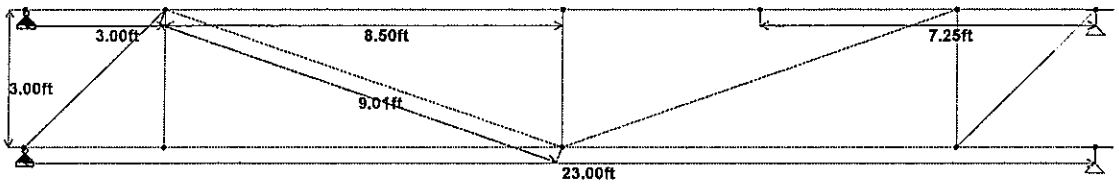

Load 1

Software licensed to Halcrow	Job No ?	Sheet No 1	Rev
	Part ROOF TRUSS B-4		
Job Title ROOF TRUSS B-4	Ref 1		
	By YB	Date 08/11/12	Chd
Client	File 6 - Truss B - 4.std	Date/Time 14-Aug-2012 07:38	

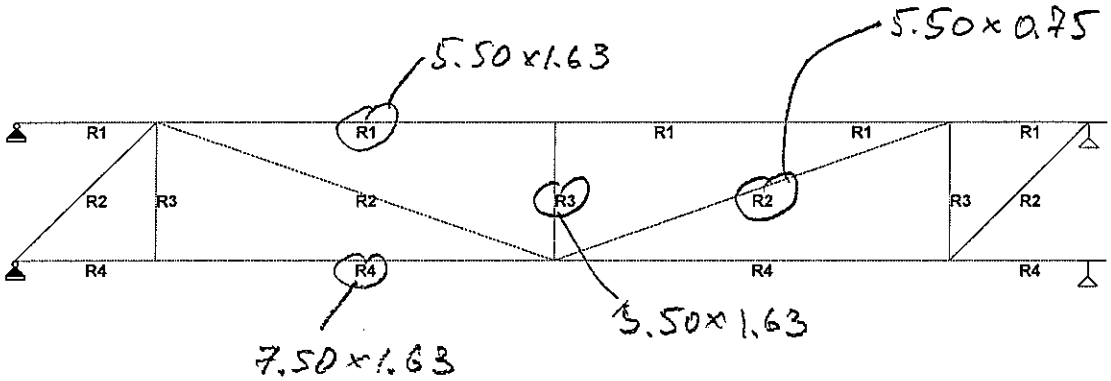

Load 1

```
STAAD SPACE DESIGN OF TRUSS
START JOB INFORMATION
JOB NAME ROOF TRUSS B-4
JOB NO ?
JOB PART ROOF TRUSS B-4
JOB REF 1
ENGINEER NAME YB
*                                          *********************************
*                                          *                               *
*                                          *                               *
*                                          *         ROOF TRUSS B-4        *
*                                          *                               *
*                                          *                               *
*                                          *********************************
ENGINEER DATE 08/11/12
END JOB INFORMATION
INPUT WIDTH 79
*
UNIT FEET KIP
JOINT COORDINATES
1 0 0 0; 2 3 0 0; 3 11.5 0 0; 4 15.75 0 0; 5 20 0 0; 6 23 0 0;
7 0 -3 0; 8 3 -3 0; 9 11.5 -3 0; 10 20 -3 0; 11 23 -3 0;
*
MEMBER INCIDENCES
1 1 2; 2 2 3; 3 3 4; 4 4 5; 5 5 6;
6 2 7; 7 2 8; 8 2 9; 9 3 9; 10 5 9; 11 5 10;
12 6 10;  13 7 8; 14 8 9; 15 9 10; 16 10 11;
*
*
*
MEMBER TRUSS
6 TO 12
*
***********CONSTANS********
*
UNIT INCHES KIP
DEFINE MATERIAL START
ISOTROPIC STEEL
E 29000
POISSON 0.3
DENSITY 0.000283
ALPHA 6.5e-006
DAMP 0.03
*
ISOTROPIC TIMBER
E 1600
POISSON 0.3
DENSITY 1.85e-005
*ALPHA 5.5e-006
END DEFINE MATERIAL
*
CONSTANTS
MATERIAL TIMBER ALL
*
MEMBER PROPERTY AMERICAN
1 TO 5 PRIS YD 5.5 ZD 1.625
6 8 10 12 PRIS YD 5.5 ZD 0.75
7 9 11 PRIS YD 3.5 ZD 1.625
13 TO 16 PRIS YD 7.5 ZD 1.625
*************************
SUPPORTS
1 7 PINNED
6 11 FIXED BUT FX MY MZ
*
*******************************************************
UNIT FEET POUND
LOAD 1 S/W
SELFWEIGHT Y -1
*
LOAD 2 DR (ROOF DL)
*Truss c/c 2'
```

```
*Truss c/c 2'
*Load 2' x 11 psf = 22 p/ft
MEMBER LOAD
1 TO 5 UNI GY -22
*
LOAD 3 LR (ROOF LL)
*Truss c/c 2'
*Load  2' x 20 psf = 40 p/ft
MEMBER LOAD
1 TO 5 UNI GY -40
*
LOAD 4 WIND UPLIFT
*Truss c/c 2'
*Load  2' x  95 psf = 190 p/ft (Zone 1)
*Load  2' x 132 psf = 264 p/ft (Zone 2)
MEMBER LOAD
4 5 UNI GY 264
1 TO 3 UNI GY 190
*
*******************************************************
LOAD COMB 101 (DL+LR) (EQ. 16-10)
1 1.0 2 1.0 3 1.0
*
LOAD COMB 102 (DL+0.6W) (EQ. 16-12)
1 1.0 2 1.0 4 0.6
*
LOAD COMB 103 (DL+0.45W+0.75LR) (EQ. 16-13)
1 1.0 2 1.0 4 0.45 3 0.75
*
LOAD COMB 104 (0.6DL+0.6W) (EQ. 16-14)
1 0.6 2 0.6 4 0.6
*******************************************************
PERFORM ANALYSIS PRINT STATICS CHECK
LOAD LIST 101 TO 104
PRINT MEMBER FORCES
PRINT SUPPORT REACTION
PRINT JOINT DISPLACEMENTS
UNIT INCHES KIP
PRINT MAXFORCE ENVELOPE
PRINT ALL
FINISH
```

Beam	L/C	Node	Axial Force (kip)	Shear-Y (kip)	Shear-Z (kip)	Torsion (kip-ft)	Moment-Y (kip-ft)	Moment-Z (kip-ft)
1	104	1	1.54	0.01	0.00	0.00	0.00	-0.00
		2	-1.54	-0.31	0.00	0.00	0.00	0.48
2	104	2	-1.69	-0.41	0.00	0.00	0.00	-0.48
		3	1.69	-0.44	0.00	0.00	0.00	0.63
3	104	3	-1.69	-0.47	0.00	0.00	0.00	-0.63
		4	1.69	0.05	0.00	0.00	0.00	-0.48
4	104	4	-1.69	-0.05	0.00	0.00	0.00	0.48
		5	1.69	-0.56	0.00	0.00	0.00	0.60
5	104	5	-1.18	-0.42	0.00	0.00	0.00	-0.60
		6	1.18	-0.02	0.00	0.00	0.00	-0.00
6	104	2	-2.02	0.00	0.00	0.00	0.00	0.00
		7	2.02	0.00	0.00	0.00	0.00	0.00
7	104	2	0.08	0.00	0.00	0.00	0.00	0.00
		8	-0.08	0.00	0.00	0.00	0.00	0.00
8	104	2	1.91	0.00	0.00	0.00	0.00	0.00
		9	-1.91	0.00	0.00	0.00	0.00	0.00
9	104	3	-0.92	0.00	0.00	0.00	0.00	0.00
		9	0.91	0.00	0.00	0.00	0.00	0.00
10	104	5	0.54	0.00	0.00	0.00	0.00	0.00
		9	-0.54	0.00	0.00	0.00	0.00	0.00
11	104	5	-1.15	0.00	0.00	0.00	0.00	0.00
		10	1.15	0.00	0.00	0.00	0.00	0.00
12	104	6	1.66	0.00	0.00	0.00	0.00	0.00
		10	-1.67	0.00	0.00	0.00	0.00	0.00
13	104	7	-0.11	0.05	0.00	0.00	0.00	0.00
		8	0.11	-0.04	0.00	0.00	0.00	0.14
14	104	8	-0.11	-0.04	0.00	0.00	0.00	-0.14
		9	0.11	0.05	0.00	0.00	0.00	-0.26
15	104	9	1.18	0.04	0.00	0.00	0.00	0.26
		10	-1.18	-0.03	0.00	0.00	0.00	0.01
16	104	10	-0.00	-0.00	0.00	0.00	0.00	-0.01
		11	0.00	0.01	0.00	0.00	0.00	0.00

Software licensed to Halcrow	Job No ?	Sheet No 1	Rev
	Part ROOF TRUSS B-4		
Job Title ROOF TRUSS B-4	Ref 1		
	By YB	Date 08/11/12	Chd
Client	File 6 - Truss B - 4.std	Date/Time 14-Aug-2012 07:38	

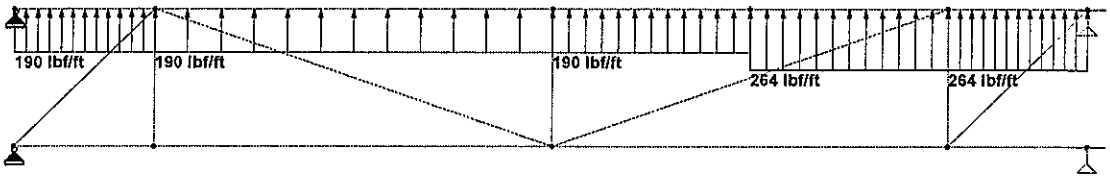

Y
Z X

Load 4

Software licensed to Halcrow	Job No ?	Sheet No 1	Rev
	Part ROOF TRUSS B-4		
Job Title ROOF TRUSS B-4	Ref 1		
	By YB	Date 08/11/12	Chd
Client	File 6 - Truss B - 4.std	Date/Time 14-Aug-2012 07:38	

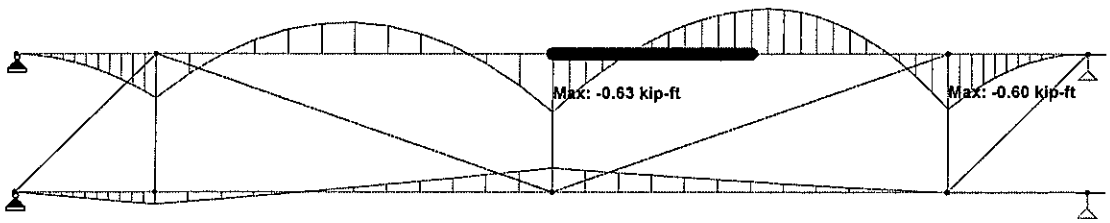

Load 104 : Bending Z
Moment - kip-ft

Software licensed to Halcrow	Job No ?	Sheet No 1	Rev
	Part ROOF TRUSS B-4		
Job Title ROOF TRUSS B-4	Ref 1		
	By YB	Date 08/11/12	Chd
Client	File 6 - Truss B - 4.std	Date/Time 14-Aug-2012 07:38	

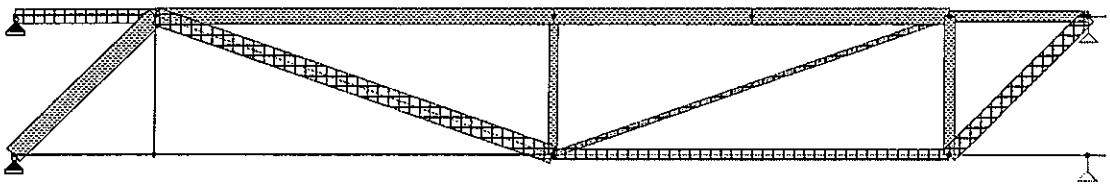

Load 104 : Axial Force

Software licensed to Halcrow	Job No ?	Sheet No 1	Rev
	Part ROOF TRUSS B-4		
Job Title ROOF TRUSS B-4	Ref 1		
	By YB	Date 08/11/12	Chd
Client	File 6 - Truss B - 4.std	Date/Time 14-Aug-2012 07:38	

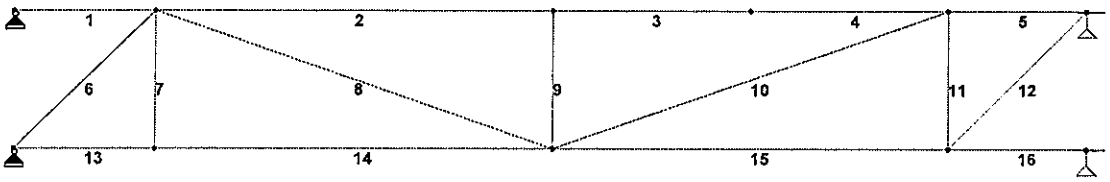

Load 104

Beam	L/C	Node	Axial Force (kip)	Shear-Y (kip)	Shear-Z (kip)	Torsion (kip-ft)	Moment-Y (kip-ft)	Moment-Z (kip-ft)
1	101	1	-1.03	-0.01	0.00	0.00	0.00	-0.00
		2	1.03	0.20	0.00	0.00	0.00	-0.32
2	101	2	1.06	0.27	0.00	0.00	0.00	0.32
		3	-1.06	0.28	0.00	0.00	0.00	-0.37
3	101	3	1.06	0.28	0.00	0.00	0.00	0.37
		4	-1.06	-0.01	0.00	0.00	0.00	0.25
4	101	4	1.06	0.01	0.00	0.00	0.00	-0.25
		5	-1.06	0.26	0.00	0.00	0.00	-0.29
5	101	5	0.66	0.19	0.00	0.00	0.00	0.29
		6	-0.66	-0.00	0.00	0.00	0.00	0.00
6	101	2	1.35	0.00	0.00	0.00	0.00	0.00
		7	-1.35	0.00	0.00	0.00	0.00	0.00
7	101	2	-0.08	0.00	0.00	0.00	0.00	0.00
		8	0.08	0.00	0.00	0.00	0.00	0.00
8	101	2	-1.20	0.00	0.00	0.00	0.00	0.00
		9	1.20	0.00	0.00	0.00	0.00	0.00
9	101	3	0.56	0.00	0.00	0.00	0.00	0.00
		9	-0.56	0.00	0.00	0.00	0.00	0.00
10	101	5	-0.43	0.00	0.00	0.00	0.00	0.00
		9	0.43	0.00	0.00	0.00	0.00	0.00
11	101	5	0.60	0.00	0.00	0.00	0.00	0.00
		10	-0.61	0.00	0.00	0.00	0.00	0.00
12	101	6	-0.93	0.00	0.00	0.00	0.00	0.00
		10	0.93	0.00	0.00	0.00	0.00	0.00
13	101	7	0.07	-0.03	0.00	0.00	0.00	-0.00
		8	-0.07	0.04	0.00	0.00	0.00	-0.10
14	101	8	0.07	0.04	0.00	0.00	0.00	0.10
		9	-0.07	-0.02	0.00	0.00	0.00	0.15
15	101	9	-0.66	-0.01	0.00	0.00	0.00	-0.15
		10	0.66	0.03	0.00	0.00	0.00	-0.04
16	101	10	-0.00	0.02	0.00	0.00	0.00	0.04
		11	0.00	-0.01	0.00	0.00	0.00	0.00

Beam	L/C	Node	Axial Force (kip)	Shear-Y (kip)	Shear-Z (kip)	Torsion (kip-ft)	Moment-Y (kip-ft)	Moment-Z (kip-ft)
1	104	1	1.54	0.01	0.00	0.00	0.00	-0.00
		2	-1.54	-0.31	0.00	0.00	0.00	0.48
2	104	2	-1.69	-0.41	0.00	0.00	0.00	-0.48
		3	1.69	-0.44	0.00	0.00	0.00	0.63
3	104	3	-1.69	-0.47	0.00	0.00	0.00	-0.63
		4	1.69	0.05	0.00	0.00	0.00	-0.48
4	104	4	-1.69	-0.05	0.00	0.00	0.00	0.48
		5	1.69	-0.56	0.00	0.00	0.00	0.60
5	104	5	-1.18	-0.42	0.00	0.00	0.00	-0.60
		6	1.18	-0.02	0.00	0.00	0.00	-0.00
6	104	2	-2.02	0.00	0.00	0.00	0.00	0.00
		7	2.02	0.00	0.00	0.00	0.00	0.00
7	104	2	0.08	0.00	0.00	0.00	0.00	0.00
		8	-0.08	0.00	0.00	0.00	0.00	0.00
8	104	2	1.91	0.00	0.00	0.00	0.00	0.00
		9	-1.91	0.00	0.00	0.00	0.00	0.00
9	104	3	-0.92	0.00	0.00	0.00	0.00	0.00
		9	0.91	0.00	0.00	0.00	0.00	0.00
10	104	5	0.54	0.00	0.00	0.00	0.00	0.00
		9	-0.54	0.00	0.00	0.00	0.00	0.00
11	104	5	-1.15	0.00	0.00	0.00	0.00	0.00
		10	1.15	0.00	0.00	0.00	0.00	0.00
12	104	6	1.66	0.00	0.00	0.00	0.00	0.00
		10	-1.67	0.00	0.00	0.00	0.00	0.00
13	104	7	-0.11	0.05	0.00	0.00	0.00	0.00
		8	0.11	-0.04	0.00	0.00	0.00	0.14
14	104	8	-0.11	-0.04	0.00	0.00	0.00	-0.14
		9	0.11	0.05	0.00	0.00	0.00	-0.26
15	104	9	1.18	0.04	0.00	0.00	0.00	0.26
		10	-1.18	-0.03	0.00	0.00	0.00	0.01
16	104	10	-0.00	-0.00	0.00	0.00	0.00	-0.01
		11	0.00	0.01	0.00	0.00	0.00	0.00

Software licensed to Halcrow	Job No ?	Sheet No 1	Rev
	Part ROOF TRUSS B-4		
Job Title ROOF TRUSS B-4	Ref 1		
	By YB	Date 08/11/12	Chd
Client	File 6 - Truss B - 4.std	Date/Time 14-Aug-2012 08:58	

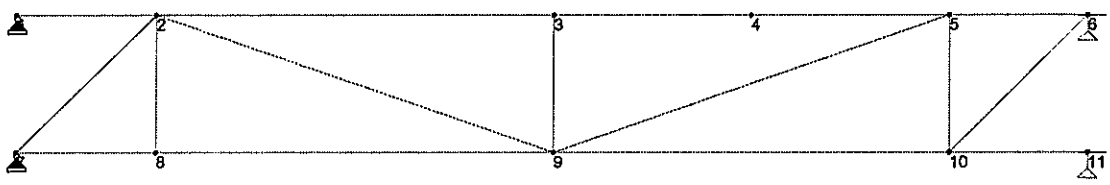

Y
Z X

Load 1

JOINT DISPLACEMENT (INCH RADIANS) STRUCTURE TYPE = SPACE

JOINT	LOAD	X-TRANS	Y-TRANS	Z-TRANS	X-ROTAN	Y-ROTAN	Z-ROTAN
1	101	0.00000	0.00000	0.00000	0.00000	0.00000	-0.00015
	102	0.00000	0.00000	0.00000	0.00000	0.00000	0.00021
	103	0.00000	0.00000	0.00000	0.00000	0.00000	0.00008
	104	0.00000	0.00000	0.00000	0.00000	0.00000	0.00024
2	101	0.00258	-0.01735	0.00000	0.00000	0.00000	-0.00150
	102	-0.00345	0.02304	0.00000	0.00000	0.00000	0.00200
	103	-0.00118	0.00784	0.00000	0.00000	0.00000	0.00067
	104	-0.00387	0.02590	0.00000	0.00000	0.00000	0.00223
3	101	-0.00501	-0.08742	0.00000	0.00000	0.00000	-0.00015
	102	0.00734	0.12228	0.00000	0.00000	0.00000	0.00076
	103	0.00279	0.04412	0.00000	0.00000	0.00000	0.00049
	104	0.00817	0.13666	0.00000	0.00000	0.00000	0.00079
4	101	-0.00880	-0.12561	0.00000	0.00000	0.00000	0.00046
	102	0.01274	0.20734	0.00000	0.00000	0.00000	-0.00043
	103	0.00477	0.08613	0.00000	0.00000	0.00000	-0.00008
	104	0.01419	0.22720	0.00000	0.00000	0.00000	-0.00051
5	101	-0.01259	-0.02978	0.00000	0.00000	0.00000	0.00172
	102	0.01814	0.04639	0.00000	0.00000	0.00000	-0.00294
	103	0.00676	0.01857	0.00000	0.00000	0.00000	-0.00125
	104	0.02022	0.05128	0.00000	0.00000	0.00000	-0.00321
6	101	-0.01425	0.00000	0.00000	0.00000	0.00000	0.00055
	102	0.02083	0.00000	0.00000	0.00000	0.00000	-0.00082
	103	0.00787	0.00000	0.00000	0.00000	0.00000	-0.00032
	104	0.02318	0.00000	0.00000	0.00000	0.00000	-0.00092
7	101	0.00000	0.00000	0.00000	0.00000	0.00000	-0.00042
	102	0.00000	0.00000	0.00000	0.00000	0.00000	0.00056
	103	0.00000	0.00000	0.00000	0.00000	0.00000	0.00019
	104	0.00000	0.00000	0.00000	0.00000	0.00000	0.00063
8	101	-0.00013	-0.01767	0.00000	0.00000	0.00000	-0.00065
	102	0.00018	0.02329	0.00000	0.00000	0.00000	0.00084
	103	0.00007	0.00789	0.00000	0.00000	0.00000	0.00028
	104	0.00020	0.02622	0.00000	0.00000	0.00000	0.00095
9	101	-0.00049	-0.08520	0.00000	0.00000	0.00000	-0.00011
	102	0.00070	0.11900	0.00000	0.00000	0.00000	0.00022
	103	0.00026	0.04290	0.00000	0.00000	0.00000	0.00010
	104	0.00078	0.13304	0.00000	0.00000	0.00000	0.00024
10	101	0.00296	-0.02739	0.00000	0.00000	0.00000	0.00082
	102	-0.00489	0.04220	0.00000	0.00000	0.00000	-0.00118
	103	-0.00206	0.01676	0.00000	0.00000	0.00000	-0.00044
	104	-0.00538	0.04672	0.00000	0.00000	0.00000	-0.00132
11	101	0.00296	0.00000	0.00000	0.00000	0.00000	0.00074
	102	-0.00489	0.00000	0.00000	0.00000	0.00000	-0.00117
	103	-0.00206	0.00000	0.00000	0.00000	0.00000	-0.00047
	104	-0.00538	0.00000	0.00000	0.00000	0.00000	-0.00129

Truss B - 1

Compression Members 5 and 6 Upgrading

124

Software licensed to Halcrow	Job No ?	Sheet No 1	Rev
	Part ROOF TRUSS B-1		
Job Title ROOF TRUSS B-1	Ref 1		
	By BY	Date 08/11/12	Chd
Client	File 3 - Truss B - 1.std	Date/Time 13-Aug-2012 15:46	

TRUSS B-1 (GRAVITY)

COMP. MEMBERS 5 AND 6 UPGRADED:
— 1.5×5.5" ELEMENT ADDED.

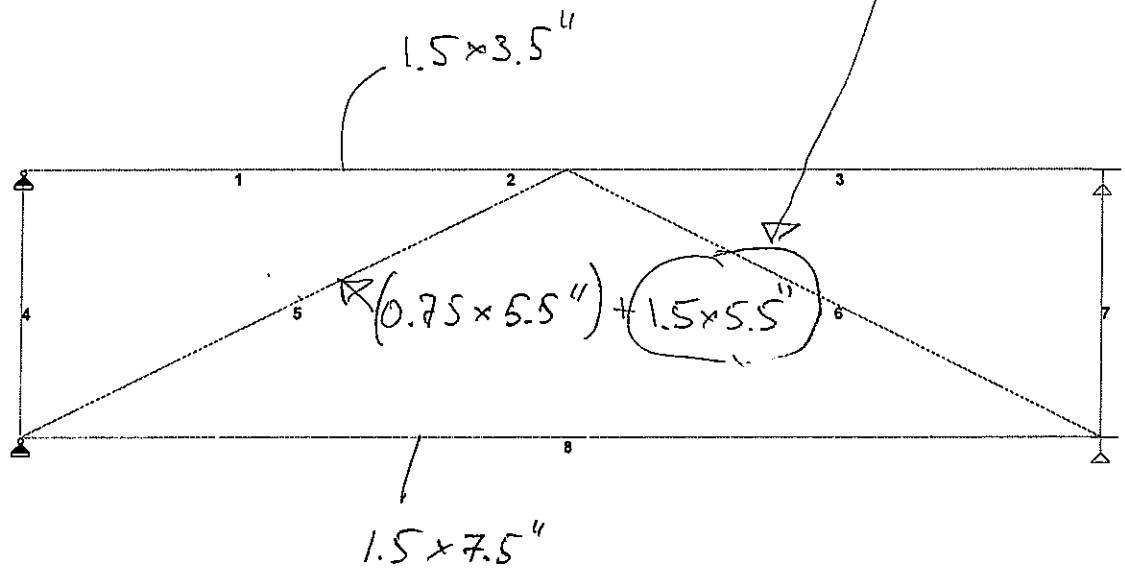

NEW MEMBERS 5,6: 0.75" + 1.50" = 2.25"
(EXIST. + NEW)

Load 1

125

Software licensed to Halcrow	Job No ?	Sheet No 1	Rev
	Part ROOF TRUSS B-1		
Job Title ROOF TRUSS B-1	Ref 1		
	By BY	Date 08/11/12	Chd
Client	File 3 - Truss B - 1.std	Date/Time 13-Aug-2012 15:46	

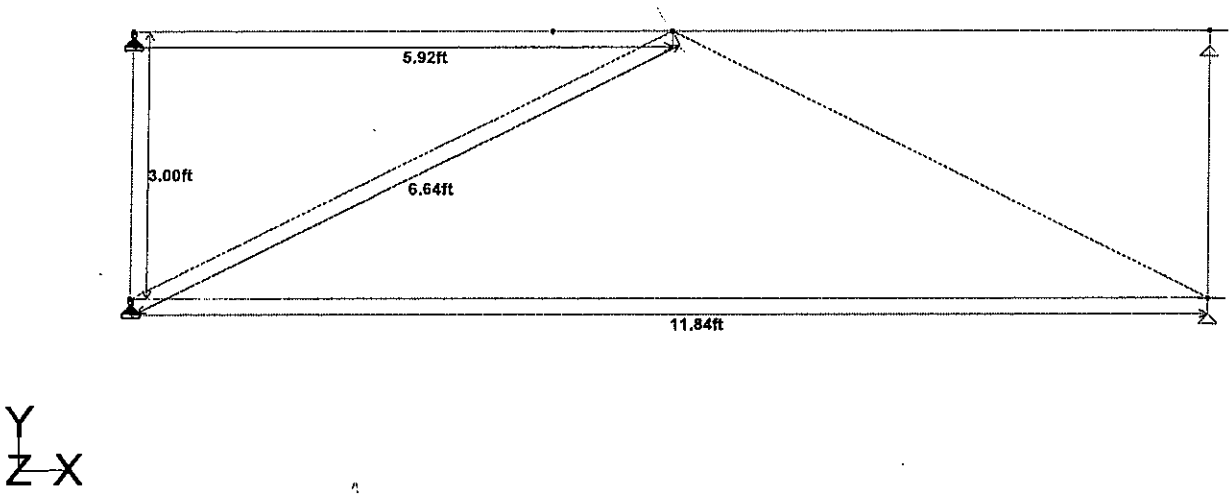

Load 1

Compression member 5

All design procedures will be done according to
*The National Design Specification for Wood Construction (**NDS**)* 2005

Species: Southern Pine, grade 2
Nominal Sizes: D1 = 6.0 in
D2 = 3.0 in 2" x 6" new element attached
Dressed Sizes: d1 = 5.50 in
d2 = 2.25 in
Dressed Sizes: Table 1B, p.14 Supplement, Section Properties
Classification: Visually Graded

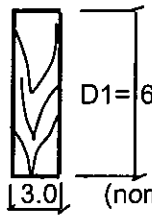

Cross section Area A = 5.50 × 2.25 = **12.38** In^2

Dimension lumber – refers to lumber from 2" to 4" (nominal) thick,
NDS 4.1.3.2 and 2" (nominal) or more width

Design values: "Reference Design Value", Table 4B, NDS **Supplement**

Fc = 1600 psi compression parallel to grain

E = 1600000 psi modulus of elasticity

Emin = 580000 psi modulus of elasticity (min)

Adjustment Factors

(for normal building environmental, see Manual, p. 13)

C_D = 1.60 load duration factor (wind) see Table 2.3.2 p.9

C_F = 1.00 size factor, for Southern Pine already incorporated I tabulated values (see p. 37)

C_p = 1 column stability factor (calculated below)

F*c - tabulated compression design value multiplied by all adjustment factors, except **Cp**

F*c = Fb × C_D × C_F =

= 1600 × 1.60 × 1.00 = **2560** psi

Emin' = Emin = 580000 psi

Calculation of column stability factor Cp (see 3.7 - p.19)

Unbraced length of the compressed member L = 80 in = 6.64 ft

(pinned - pinned) Ke = 1.00 effective length coefficient, See Appendix G, p.156

Le = Ke × L = 1.00 x 80 = 80 in

Re - the slenderness ratio, for columns with rectangular cross section shall be taken as the larger of the ratios Lx/d1 or Lz/d2

Re = Le / d2 = 79.68 / 2.25 = 35 > 50 **ok!**

F*c = **2560** psi (see calculations above)

$$F_{cE} = \frac{K \times Emin'}{(Re)^2} = \frac{0.822 \times 580000}{35 \times 35} = 380$$

k1 = F_{cE} / F*c = 380 / 2560 = 0.15

c = 0.80 – for sawn lumber

$$k2 = \frac{1 + k1}{2c} = \frac{1 + 0.15}{2 \times 0.80} = 0.72$$

k3 =k2 ^ 2 = 0.72 × 0.72 = 0.52

$$Cp = k2 - \sqrt{k3 - k1 / c}$$

$$\mathbf{Cp} = 0.72 - \sqrt{0.52 - 0.15 / 0.80} = \mathbf{0.144}$$

Corrected value Fc' = 2560 × 0.144 = **368** psi

Allowable compression force P = A × Fc' = 12.38 × 368 = 4552 p

Compression in considered member P = 0.58 k (see STAAD)

P = 4.6 k > 0.58 k ok!

ROOF TRUSSES

STRUCTURAL EVALUATION

TABLE OF CONTENTS

Page

A Roof Trusses Computer Analysis (STAAD)

1 Truss AU - 1

1.1 Results for Gravity Loads

1.2 Results for Uplift (wind) Loads

1.3 Joint Displacement

2 Truss A - 1

2.1 Results for Gravity Loads

2.2 Results for Uplift (wind) Loads

2.3 Joint Displacement

3 Truss B - 1

3.1 Results for Gravity Loads

3.2 Results for Uplift (wind) Loads

3.3 Joint Displacement

4 Truss B - 2

4.1 Results for Gravity Loads

4.2 Results for Uplift (wind) Loads

4.3 Joint Displacement

5 Truss B - 3

5.1 Results for Gravity Loads

5.2 Results for Uplift (wind) Loads

5.3 Joint Displacement

6 Truss B - 4

6.1 Results for Gravity Loads

6.2 Results for Uplift (wind) Loads

6.3 Joint Displacement

TABLE OF CONTENTS
(continued)

Page

B Roof Trusses Member Checking

7 Truss AU - 1

7.1 Summary of Member checking

7.2 Gravity Loads

7.3 Uplift (wind) Loads

8 Truss A - 1

8.1 Summary of Member checking

8.2 Gravity Loads

8.3 Uplift (wind) Loads

9 Truss B - 1

9.1 Summary of Member checking

9.2 Gravity Loads

9.3 Uplift (wind) Loads

10 Truss B - 2

10.1 Summary of Member checking

10.2 Gravity Loads

10.3 Uplift (wind) Loads

11 Truss B - 3

11.1 Summary of Member checking

11.2 Gravity Loads

11.3 Uplift (wind) Loads

12 Truss B - 4

12.1 Summary of Member checking

12.2 Gravity Loads

12.3 Uplift (wind) Loads

ROOF TRUSSES

Computer Analysis, STAAD

ROOF TRUSS

AU - 1

Software licensed to Halcrow	Job No 1	Sheet No 1	Rev
	Part ROOF TRUSS AU-1		
Job Title ROOF TRUSS AU-1	Ref 1		
	By YB	Date 08/11/12	Chd
Client	File 1 - Truss AU - 1.std	Date/Time 13-Aug-2012 14:43	

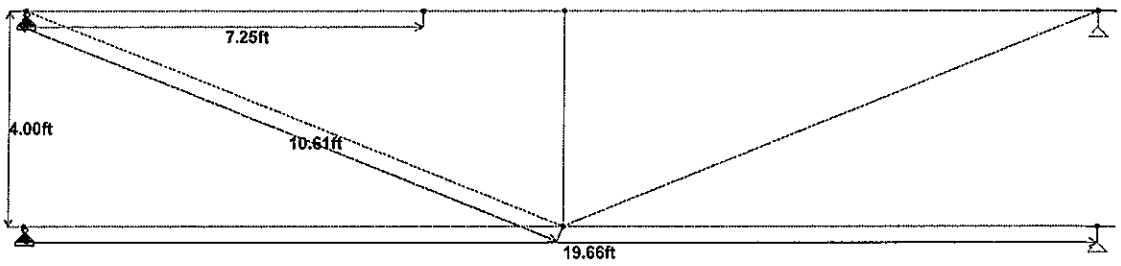

Load 1

Software licensed to Halcrow	Job No 1	Sheet No 1	Rev
	Part ROOF TRUSS AU-1		
Job Title ROOF TRUSS AU-1	Ref 1		
	By YB	Date 08/11/12	Chd
Client	File 1 - Truss AU - 1.std	Date/Time 13-Aug-2012 14:43	

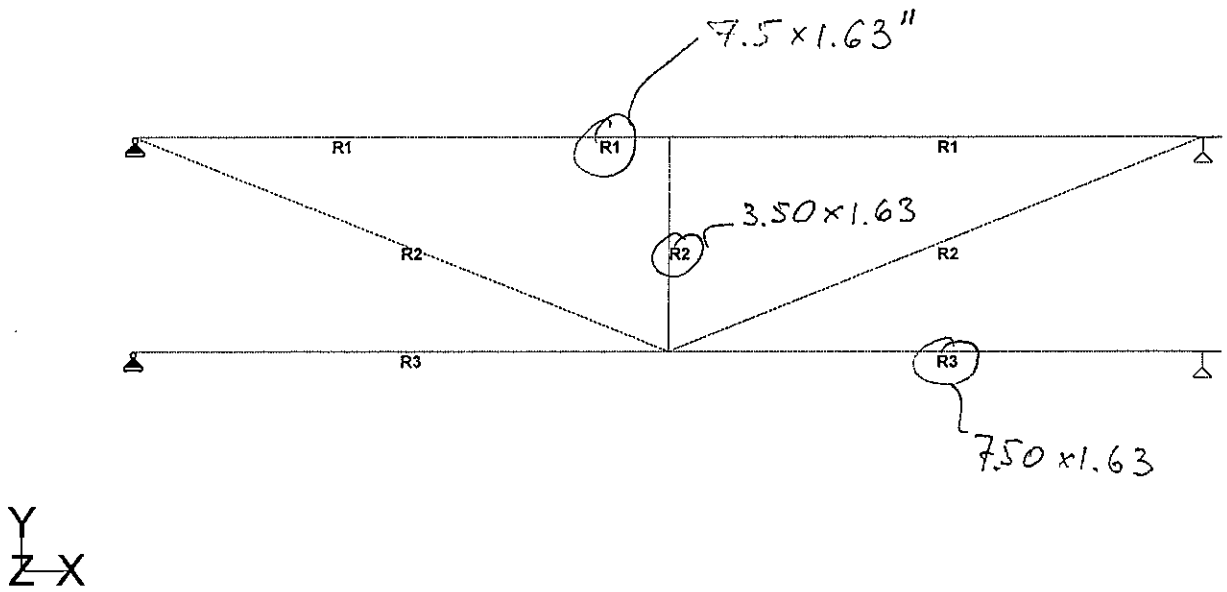

Load 1

```
STAAD SPACE DESIGN OF TRUSS
START JOB INFORMATION
JOB NAME ROOF TRUSS AU-1
JOB NO 1
JOB PART ROOF TRUSS AU-1
JOB REF 1
ENGINEER NAME YB
*                                          *********************************
*                                          *                               *
*                                          *                               *
*                                          *       ROOF TRUSS AU-1         *
*                                          *                               *
*                                          *                               *
*                                          *********************************
ENGINEER DATE 08/11/12
END JOB INFORMATION
INPUT WIDTH 79
*
UNIT FEET KIP
JOINT COORDINATES
1 0 0 0; 2 7.25 0 0; 3 9.83 0 0; 4 19.66 0 0; 5 0 -4 0; 6 9.83 -4 0;
7 19.66 -4 0;
*
MEMBER INCIDENCES
1 1 2; 2 2 3; 3 3 4; 4 1 6; 5 3 6; 6 4 6; 7 5 6; 8 6 7;
*
*
*
MEMBER TRUSS
4 TO 6
*
***********CONSTANS********
*
UNIT INCHES KIP
DEFINE MATERIAL START
*
ISOTROPIC TIMBER
E 1600
POISSON 0.3
DENSITY 1.85e-005
*ALPHA 5.5e-006
END DEFINE MATERIAL
*
CONSTANTS
MATERIAL TIMBER ALL
*
MEMBER PROPERTY AMERICAN
1 TO 3 PRIS YD 7.5 ZD 1.625
4 TO 6 PRIS YD 3.5 ZD 1.625
7 8 PRIS YD 7.5 ZD 1.625
*************************
SUPPORTS
1 5 PINNED
4 7 FIXED BUT FX MY MZ
*
*******************************************************
UNIT FEET POUND
LOAD 1 S/W
SELFWEIGHT Y -1
*
LOAD 2 DR (ROOF DL)
*Truss c/c 8.5'
*Load 8.5' x 11 psf = 93.5 p/ft
MEMBER LOAD
1 TO 3 UNI GY -93.5
*
LOAD 3 LR (ROOF LL)
*Truss c/c 8.5'
*Load  8.5' x 20 psf = 170 p/ft
MEMBER LOAD
1 TO 3 UNI GY -170
```

```
1 TO 3 UNI GY -170
*
LOAD 4 WIND UPLIFT
*Truss c/c 8.5'
*Load  8.5' x  95 psf = 808 p/ft (Zone 1)
*Load  8.5' x 132 psf = 1122 p/ft (Zone 2)
MEMBER LOAD
1 UNI GY 1122
2 3 UNI GY 808
*
*******************************************************
LOAD COMB 101 (DL+LR) (EQ. 16-10)
1 1.0 2 1.0 3 1.0
*
LOAD COMB 102 (DL+0.6W) (EQ. 16-12)
1 1.0 2 1.0 4 0.6
*
LOAD COMB 103 (DL+0.45W+0.75LR) (EQ. 16-13)
1 1.0 2 1.0 4 0.45 3 0.75
*
LOAD COMB 104 (0.6DL+0.6W) (EQ. 16-14)
1 0.6 2 0.6 4 0.6
*******************************************************
PERFORM ANALYSIS PRINT STATICS CHECK
LOAD LIST 101 TO 104
PRINT MEMBER FORCES
PRINT SUPPORT REACTION
PRINT JOINT DISPLACEMENTS
UNIT INCHES KIP
PRINT MAXFORCE ENVELOPE
PRINT ALL
FINISH
```

Software licensed to Halcrow	Job No 1	Sheet No 1	Rev
	Part ROOF TRUSS AU-1		
Job Title ROOF TRUSS AU-1	Ref 1		
	By YB	Date 08/11/12	Chd
Client	File 1 - Truss AU - 1.std	Date/Time 14-Aug-2012 10:51	

WIND UPLIFT

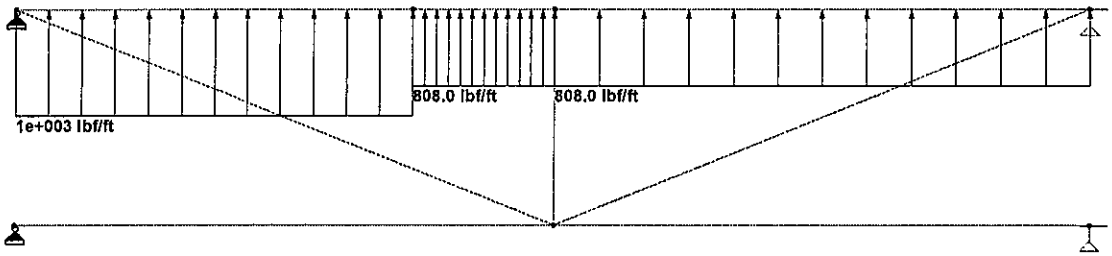

Load 4

Software licensed to Halcrow	Job No 1	Sheet No 1	Rev
	Part ROOF TRUSS AU-1		
Job Title ROOF TRUSS AU-1	Ref 1		
	By YB	Date 08/11/12	Chd
Client	File 1 - Truss AU - 1.std	Date/Time 14-Aug-2012 10:51	

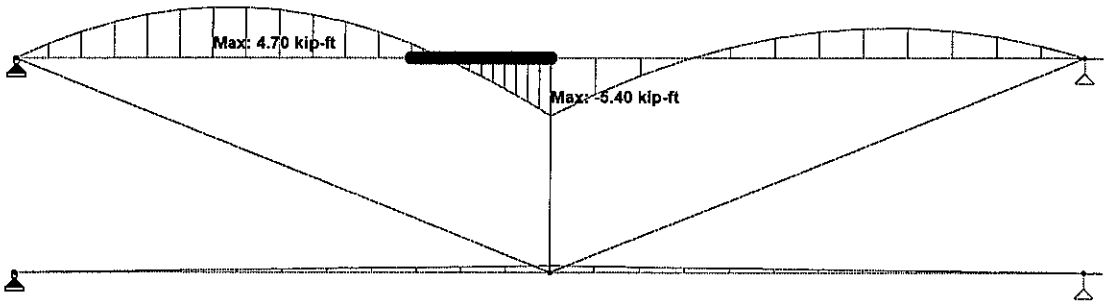

Load 104 : Bending Z
Moment - kip-ft

Software licensed to Halcrow	Job No 1	Sheet No 1	Rev
	Part ROOF TRUSS AU-1		
Job Title ROOF TRUSS AU-1	Ref 1		
	By YB	Date 08/11/12	Chd
Client	File 1 - Truss AU - 1.std	Date/Time 14-Aug-2012 10:51	

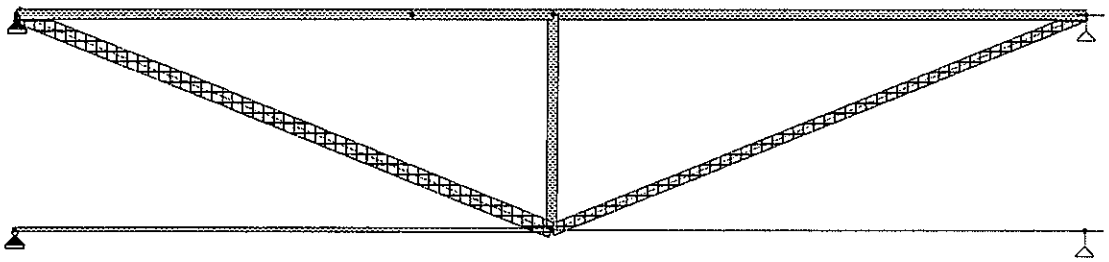

Load 104 : Axial Force

Software licensed to Halcrow	Job No 1	Sheet No 1	Rev
	Part ROOF TRUSS AU-1		
Job Title ROOF TRUSS AU-1	Ref 1		
	By YB	Date 08/11/12	Chd
Client	File 1 - Truss AU - 1.std	Date/Time 13-Aug-2012 14:43	

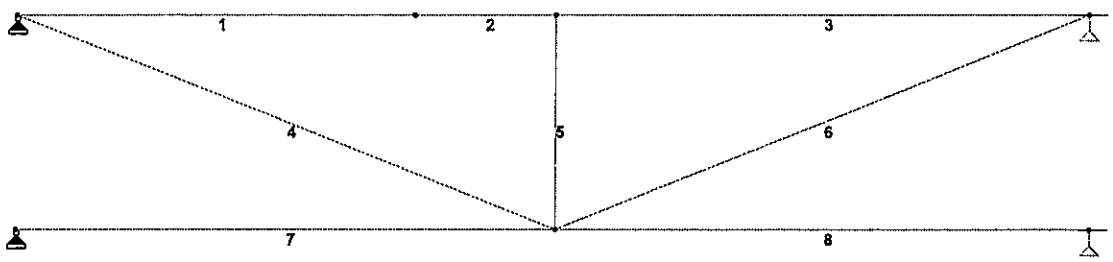

Load 1

Beam	L/C	Node	Axial Force (kip)	Shear-Y (kip)	Shear-Z (kip)	Torsion (kip·ft)	Moment-Y (kip·ft)	Moment-Z (kip·ft)
1	101	1	3.22	1.02	0.00	0.00	0.00	-0.00
		2	-3.22	0.91	0.00	0.00	0.00	0.39
2	101	2	3.22	-0.91	0.00	0.00	0.00	-0.39
		3	-3.22	1.60	0.00	0.00	0.00	-2.84
3	101	3	3.22	1.60	0.00	0.00	0.00	2.84
		4	-3.22	1.02	0.00	0.00	0.00	0.00
4	101	1	-4.96	0.01	0.00	0.00	0.00	0.00
		6	4.95	0.01	0.00	0.00	0.00	0.00
5	101	3	3.20	0.00	0.00	0.00	0.00	0.00
		6	-3.20	0.00	0.00	0.00	0.00	0.00
6	101	4	-3.48	0.01	0.00	0.00	0.00	0.00
		6	3.47	0.01	0.00	0.00	0.00	0.00
7	101	5	1.37	0.04	0.00	0.00	0.00	-0.00
		6	-1.37	-0.02	0.00	0.00	0.00	0.30
8	101	6	0.00	-0.02	0.00	0.00	0.00	-0.30
		7	-0.00	0.04	0.00	0.00	0.00	0.00

Beam	L/C	Node	Axial Force (kip)	Shear-Y (kip)	Shear-Z (kip)	Torsion (kip-ft)	Moment-Y (kip-ft)	Moment-Z (kip-ft)
1	104	1	-5.72	-2.41	0.00	0.00	0.00	0.00
		2	5.72	-2.05	0.00	0.00	0.00	-1.31
2	104	2	-5.72	2.05	0.00	0.00	0.00	1.31
		3	5.72	-3.15	0.00	0.00	0.00	5.40
3	104	3	-5.72	-2.65	0.00	0.00	0.00	-5.40
		4	5.72	-1.55	0.00	0.00	0.00	0.00
4	104	1	8.81	0.00	0.00	0.00	0.00	0.00
		6	-8.81	0.00	0.00	0.00	0.00	0.00
5	104	3	-5.80	0.00	0.00	0.00	0.00	0.00
		6	5.80	0.00	0.00	0.00	0.00	0.00
6	104	4	6.18	0.00	0.00	0.00	0.00	0.00
		6	-6.18	0.00	0.00	0.00	0.00	0.00
7	104	5	-2.44	-0.05	0.00	0.00	0.00	-0.00
		6	2.44	0.07	0.00	0.00	0.00	-0.61
8	104	6	-0.00	0.07	0.00	0.00	0.00	0.61
		7	0.00	-0.05	0.00	0.00	0.00	0.00

Software licensed to Halcrow	Job No 1	Sheet No 1	Rev
	Part ROOF TRUSS AU-1		
Job Title ROOF TRUSS AU-1	Ref 1		
	By YB	Date 08/11/12	Chd
Client	File 1 - Truss AU - 1.std	Date/Time 13-Aug-2012 14:43	

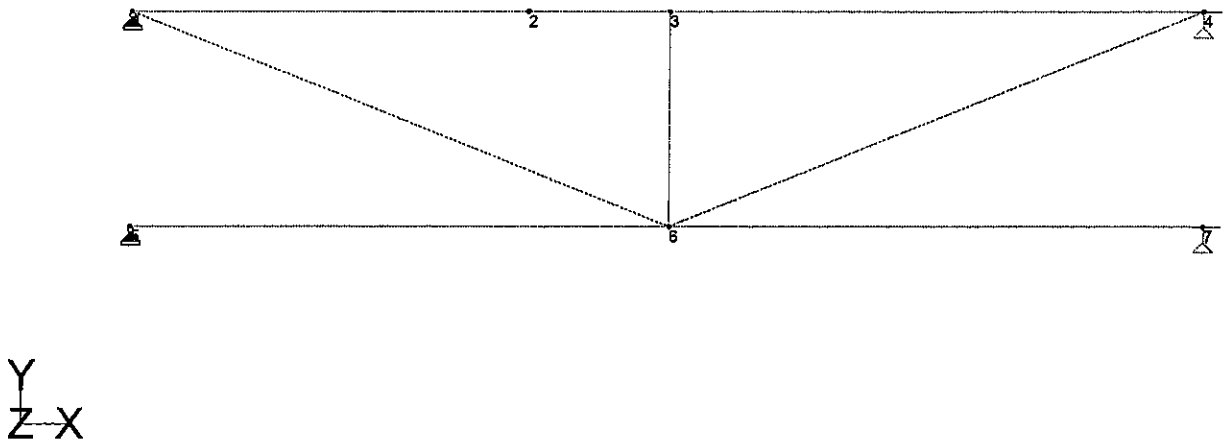

Load 1

JOINT DISPLACEMENT (INCH RADIANS) STRUCTURE TYPE = SPACE

JOINT	LOAD	X-TRANS	Y-TRANS	Z-TRANS	X-ROTAN	Y-ROTAN	Z-ROTAN
1	101	0.00000	0.00000	0.00000	0.00000	0.00000	-0.01118
	102	0.00000	0.00000	0.00000	0.00000	0.00000	0.02468
	103	0.00000	0.00000	0.00000	0.00000	0.00000	0.01216
	104	0.00000	0.00000	0.00000	0.00000	0.00000	0.02631
2	101	-0.01437	-0.32914	0.00000	0.00000	0.00000	0.00438
	102	0.02339	0.68605	0.00000	0.00000	0.00000	-0.01136
	103	0.00944	0.32808	0.00000	0.00000	0.00000	-0.00602
	104	0.02553	0.73437	0.00000	0.00000	0.00000	-0.01199
3	101	-0.01948	-0.22132	0.00000	0.00000	0.00000	0.00000
	102	0.03172	0.36102	0.00000	0.00000	0.00000	-0.00465
	103	0.01279	0.14579	0.00000	0.00000	0.00000	-0.00349
	104	0.03461	0.39383	0.00000	0.00000	0.00000	-0.00465
4	101	-0.03896	0.00000	0.00000	0.00000	0.00000	0.01118
	102	0.06343	0.00000	0.00000	0.00000	0.00000	-0.01450
	103	0.02559	0.00000	0.00000	0.00000	0.00000	-0.00452
	104	0.06922	0.00000	0.00000	0.00000	0.00000	-0.01613
5	101	0.00000	0.00000	0.00000	0.00000	0.00000	-0.00268
	102	0.00000	0.00000	0.00000	0.00000	0.00000	0.00413
	103	0.00000	0.00000	0.00000	0.00000	0.00000	0.00162
	104	0.00000	0.00000	0.00000	0.00000	0.00000	0.00455
6	101	-0.00830	-0.20445	0.00000	0.00000	0.00000	0.00000
	102	0.01351	0.33288	0.00000	0.00000	0.00000	0.00000
	103	0.00545	0.13428	0.00000	0.00000	0.00000	0.00000
	104	0.01474	0.36325	0.00000	0.00000	0.00000	0.00000
7	101	-0.00830	0.00000	0.00000	0.00000	0.00000	0.00268
	102	0.01351	0.00000	0.00000	0.00000	0.00000	-0.00413
	103	0.00545	0.00000	0.00000	0.00000	0.00000	-0.00162
	104	0.01474	0.00000	0.00000	0.00000	0.00000	-0.00455

********** END OF LATEST ANALYSIS RESULT **********

99. UNIT INCHES KIP
100. PRINT MAXFORCE ENVELOPE

Software licensed to Halcrow	Job No 1	Sheet No 1	Rev
	Part ROOF TRUSS AU-1		
Job Title ROOF TRUSS AU-1	Ref 1		
	By YB	Date 08/11/12	Chd
Client	File 1 - Truss AU - 1.std	Date/Time 15-Aug-2012 14:59	

Support Reactions

AU-1

Node	L/C	Force-X (kip)	Force-Y (kip)	Force-Z (kip)	Moment-X (kip*ft)	Moment-Y (kip*ft)	Moment-Z (kip*ft)
1	101	-1.37	2.89	0.00	0.00	0.00	0.00
4	101	0.00	2.34	0.00	0.00	0.00	0.00
7	101	0.00	0.04	0.00	0.00	0.00	0.00
5	101	1.37	0.04	0.00	0.00	0.00	0.00
5	104	-2.44	-0.05	0.00	0.00	0.00	0.00
7	104	0.00	-0.05	0.00	0.00	0.00	0.00
4	104	0.00	-3.87	0.00	0.00	0.00	0.00
1	104	2.44	-5.73	0.00	0.00	0.00	0.00

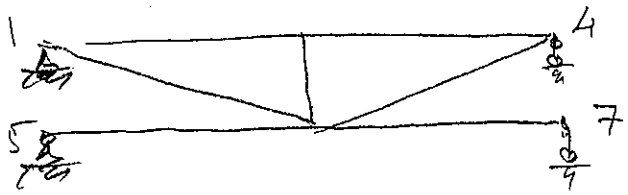

(−) upliftt

ROOF TRUSS

A - 1

Software licensed to Halcrow	Job No ?	Sheet No 1	Rev
	Part ROOF TRUSS A-1		
Job Title ROOF TRUSS A-1	Ref 1		
	By BY	Date 08/11/12	Chd
Client	File 2 - Truss A - 1.std	Date/Time 13-Aug-2012 15:01	

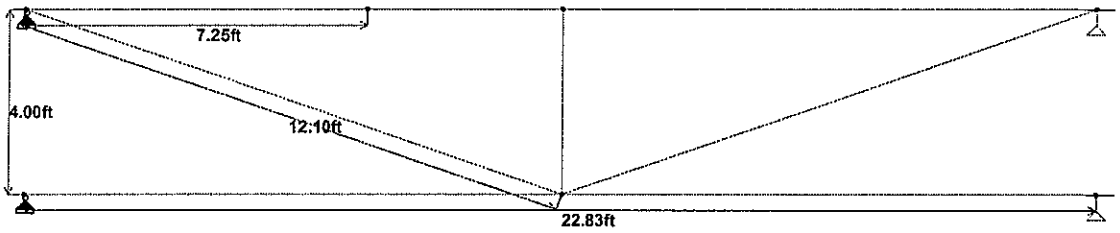

Load 1

Software licensed to Halcrow	Job No ?	Sheet No 1	Rev
	Part ROOF TRUSS A-1		
Job Title ROOF TRUSS A-1	Ref 1		
	By BY	Date 08/11/12	Chd
Client	File 2 - Truss A - 1.std	Date/Time 13-Aug-2012 15:46	

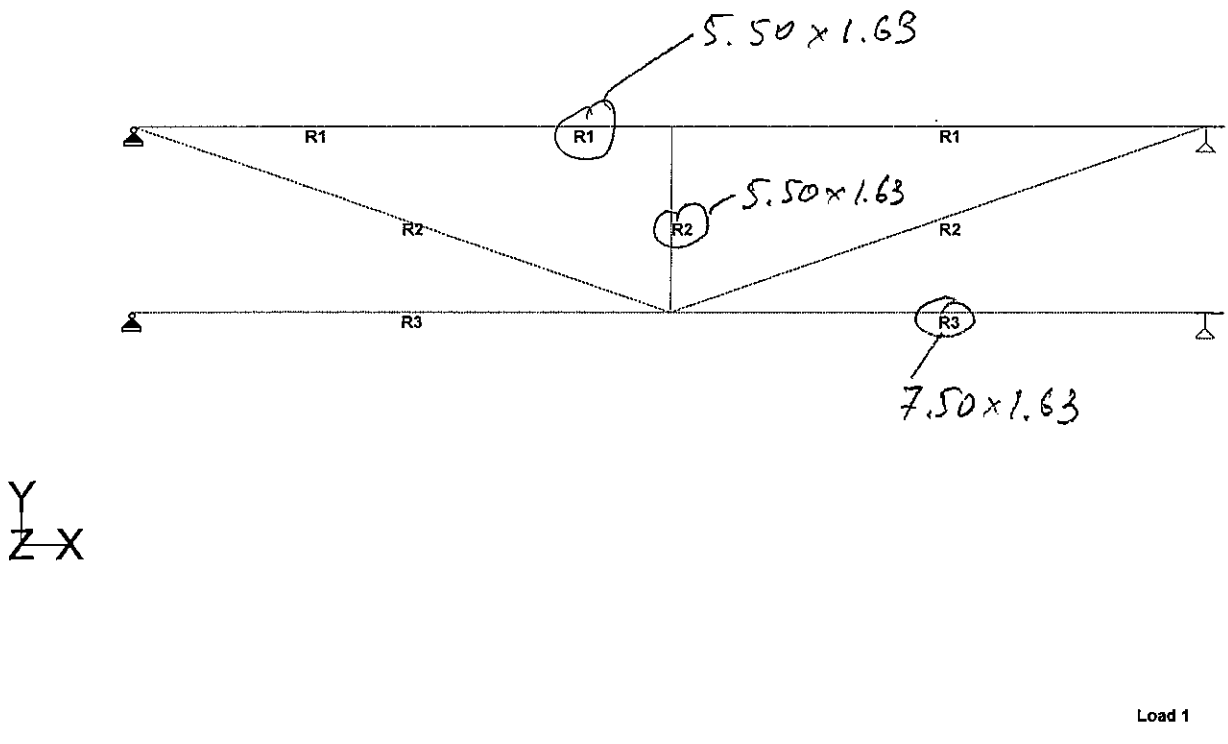

Load 1

```
STAAD SPACE DESIGN OF TRUSS
START JOB INFORMATION
JOB NAME ROOF TRUSS A-1
JOB NO ?
JOB PART ROOF TRUSS A-1
JOB REF 1
ENGINEER NAME BY
*                                        *********************************
*                                        *                               *
*                                        *                               *
*                                        *         ROOF TRUSS A-1        *
*                                        *                               *
*                                        *                               *
*                                        *********************************
ENGINEER DATE 08/11/12
END JOB INFORMATION
INPUT WIDTH 79
*
UNIT FEET KIP
JOINT COORDINATES
1 0 0 0; 2 7.25 0 0; 3 11.415 0 0; 4 22.83 0 0; 5 0 -4 0; 6 11.415 -4 0;
7 22.83 -4 0;
*
MEMBER INCIDENCES
1 1 2; 2 2 3; 3 3 4; 4 1 6; 5 3 6; 6 4 6; 7 5 6; 8 6 7;
*
*
*
MEMBER TRUSS
4 TO 6
*
***********CONSTANS********
*
UNIT INCHES KIP
DEFINE MATERIAL START
*
ISOTROPIC TIMBER
E 1600
POISSON 0.3
DENSITY 1.85e-005
*ALPHA 5.5e-006
END DEFINE MATERIAL
*
CONSTANTS
MATERIAL TIMBER ALL
*
MEMBER PROPERTY AMERICAN
1 TO 3 PRIS YD 5.5 ZD 1.625
4 TO 6 PRIS YD 5.5 ZD 1.625
7 8 PRIS YD 7.5 ZD 1.625
*************************
SUPPORTS
1 5 PINNED
4 7 FIXED BUT FX MY MZ
*
*******************************************************
UNIT FEET POUND
LOAD 1 S/W
SELFWEIGHT Y -1
*
LOAD 2 DR (ROOF DL)
*Truss c/c 2'
*Load 2' x 11 psf = 22 p/ft
MEMBER LOAD
1 TO 3 UNI GY -22
*
LOAD 3 LR (ROOF LL)
*Truss c/c 2'
*Load  2' x 20 psf = 40 p/ft
MEMBER LOAD
1 TO 3 UNI GY -40
```

```
1 TO 3 UNI GY -40
*
LOAD 4 WIND UPLIFT
*Truss c/c 2'
*Load  2' x  95 psf = 190 p/ft (Zone 1)
*Load  2' x 132 psf = 264 p/ft (Zone 2)
MEMBER LOAD
1 UNI GY 264
2 3 UNI GY 190
*
*******************************************************
LOAD COMB 101 (DL+LR) (EQ. 16-10)
1 1.0 2 1.0 3 1.0
*
LOAD COMB 102 (DL+0.6W) (EQ. 16-12)
1 1.0 2 1.0 4 0.6
*
LOAD COMB 103 (DL+0.45W+0.75LR) (EQ. 16-13)
1 1.0 2 1.0 4 0.45 3 0.75
*
LOAD COMB 104 (0.6DL+0.6W) (EQ. 16-14)
1 0.6 2 0.6 4 0.6
*******************************************************
PERFORM ANALYSIS PRINT STATICS CHECK
LOAD LIST 101 TO 104
PRINT MEMBER FORCES
PRINT SUPPORT REACTION
PRINT JOINT DISPLACEMENTS
UNIT INCHES KIP
PRINT MAXFORCE ENVELOPE
PRINT ALL
FINISH
```

Software licensed to Halcrow	Job No ?	Sheet No 1	Rev
	Part ROOF TRUSS A-1		
Job Title ROOF TRUSS A-1	Ref 1		
	By BY	Date 08/11/12	Chd
Client	File 2 - Truss A - 1.std	Date/Time 13-Aug-2012 15:01	

WIND UPLIFT

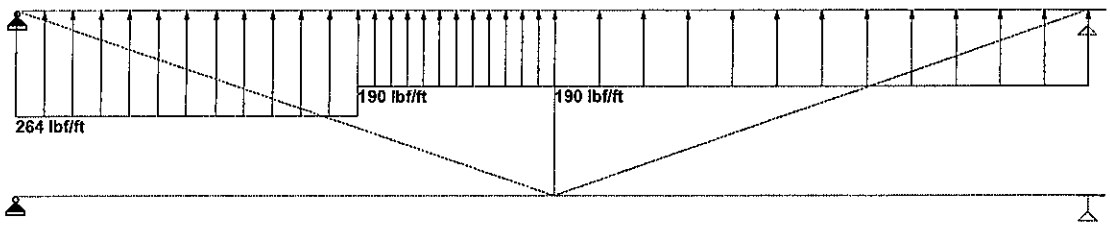

Load 4

Software licensed to Halcrow	Job No ?	Sheet No 1	Rev
	Part ROOF TRUSS A-1		
Job Title ROOF TRUSS A-1	Ref 1		
	By BY	Date 08/11/12	Chd
Client	File 2 - Truss A - 1.std	Date/Time 13-Aug-2012 15:10	

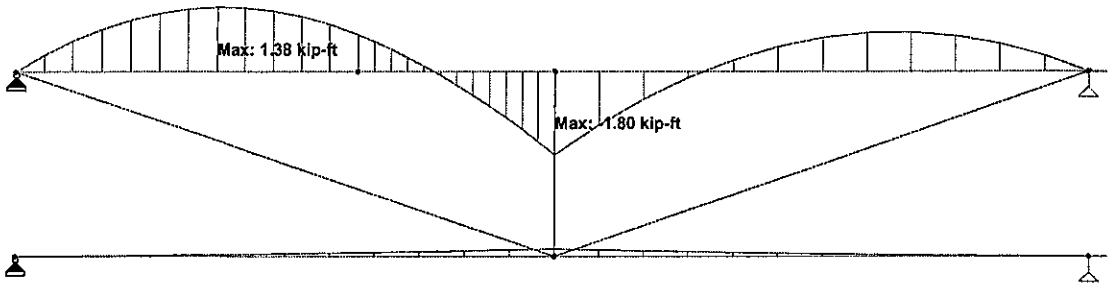

Load 104 : Bending Z
Moment - kip-ft

Software licensed to Halcrow	Job No ?	Sheet No 1	Rev
	Part ROOF TRUSS A-1		
Job Title ROOF TRUSS A-1	Ref 1		
	By BY	Date 08/11/12	Chd
Client	File 2 - Truss A - 1.std	Date/Time 13-Aug-2012 15:10	

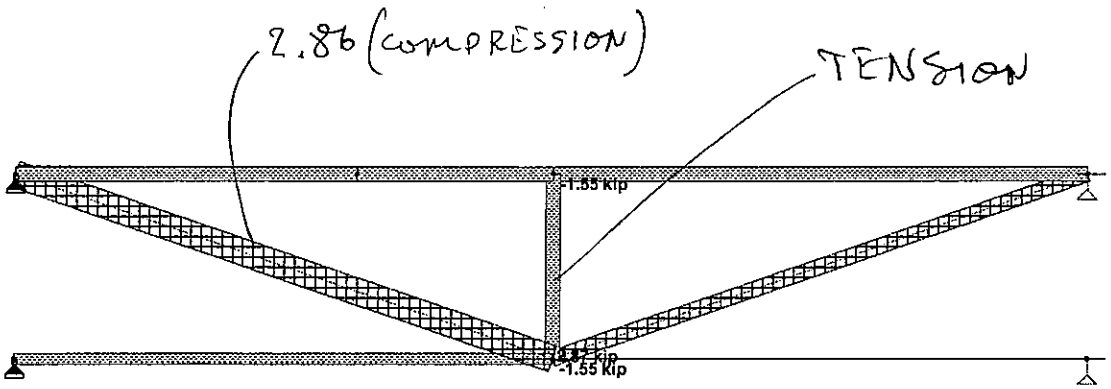

Y
Z X

Load 104 : Axial Force
Force - kip

Software licensed to Halcrow	Job No ?	Sheet No 1	Rev
	Part ROOF TRUSS A-1		
Job Title ROOF TRUSS A-1	Ref 1		
	By BY	Date 08/11/12	Chd
Client	File 2 - Truss A - 1.std	Date/Time 13-Aug-2012 15:01	

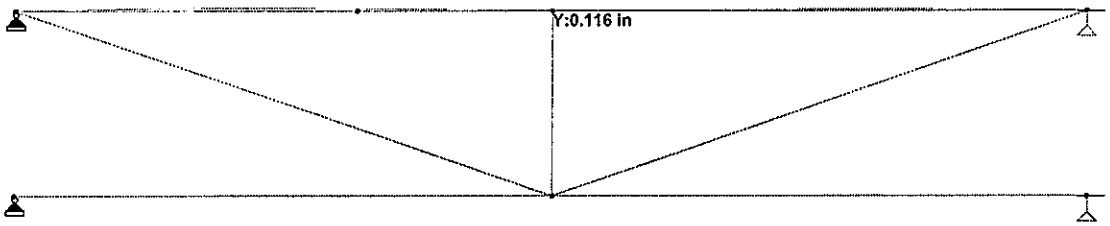

Y
Z X

DEFLECTION

Load 104 : Displacement
Displacement - in

Software licensed to Halcrow	Job No ?	Sheet No 1	Rev
	Part ROOF TRUSS A-1		
Job Title ROOF TRUSS A-1	Ref 1		
	By BY	Date 08/11/12	Chd
Client	File 2 - Truss A - 1.std	Date/Time 13-Aug-2012 15:46	

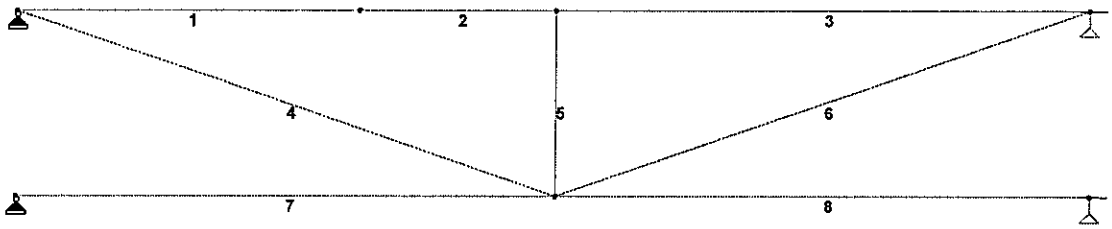

Load 1

Beam	L/C	Node	Axial Force (kip)	Shear-Y (kip)	Shear-Z (kip)	Torsion (kip-ft)	Moment-Y (kip-ft)	Moment-Z (kip-ft)
1	101	1	1.00	0.28	0.00	0.00	0.00	0.00
		2	-1.00	0.19	0.00	0.00	0.00	0.33
2	101	2	1.00	-0.19	0.00	0.00	0.00	-0.33
		3	-1.00	0.45	0.00	0.00	0.00	-1.00
3	101	3	1.00	0.45	0.00	0.00	0.00	1.00
		4	-1.00	0.28	0.00	0.00	0.00	-0.00
4	101	1	-1.86	0.01	0.00	0.00	0.00	0.00
		6	1.85	0.01	0.00	0.00	0.00	0.00
5	101	3	0.91	0.00	0.00	0.00	0.00	0.00
		6	-0.91	0.00	0.00	0.00	0.00	0.00
6	101	4	-1.06	0.01	0.00	0.00	0.00	0.00
		6	1.05	0.01	0.00	0.00	0.00	0.00
7	101	5	0.75	0.02	0.00	0.00	0.00	-0.00
		6	-0.75	0.01	0.00	0.00	0.00	0.04
8	101	6	-0.00	0.01	0.00	0.00	0.00	-0.04
		7	0.00	0.02	0.00	0.00	0.00	0.00

Beam	L/C	Node	Axial Force (kip)	Shear-Y (kip)	Shear-Z (kip)	Torsion (kip-ft)	Moment-Y (kip-ft)	Moment-Z (kip-ft)
1	104	1	-1.54	-0.63	0.00	0.00	0.00	0.00
		2	1.54	-0.41	0.00	0.00	0.00	-0.79
2	104	2	-1.54	0.41	0.00	0.00	0.00	0.79
		3	1.54	-0.83	0.00	0.00	0.00	1.80
3	104	3	-1.54	-0.73	0.00	0.00	0.00	-1.80
		4	1.54	-0.41	0.00	0.00	0.00	0.00
4	104	1	2.86	0.01	0.00	0.00	0.00	0.00
		6	-2.87	0.01	0.00	0.00	0.00	0.00
5	104	3	-1.55	0.00	0.00	0.00	0.00	0.00
		6	1.55	0.00	0.00	0.00	0.00	0.00
6	104	4	1.63	0.01	0.00	0.00	0.00	0.00
		6	-1.64	0.01	0.00	0.00	0.00	0.00
7	104	5	-1.16	-0.00	0.00	0.00	0.00	0.00
		6	1.16	0.02	0.00	0.00	0.00	-0.16
8	104	6	0.00	0.02	0.00	0.00	0.00	0.16
		7	0.00	-0.00	0.00	0.00	0.00	0.00

Software licensed to Halcrow	Job No ?	Sheet No 1	Rev
	Part ROOF TRUSS A-1		
Job Title ROOF TRUSS A-1	Ref 1		
	By BY	Date 08/11/12	Chd
Client	File 2 - Truss A - 1.std	Date/Time 13-Aug-2012 15:46	

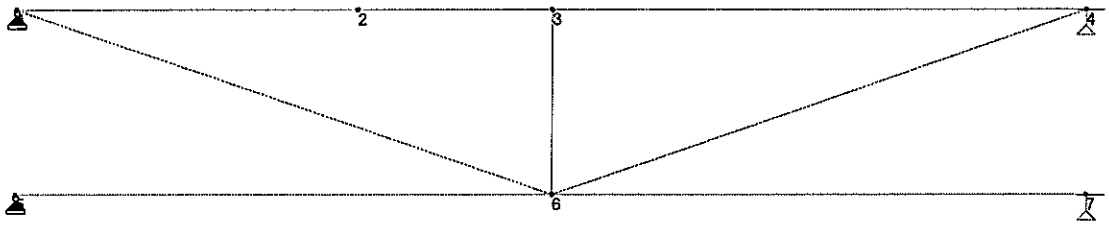

Load 1

JOINT DISPLACEMENT (INCH RADIANS) STRUCTURE TYPE = SPACE

JOINT	LOAD	X-TRANS	Y-TRANS	Z-TRANS	X-ROTAN	Y-ROTAN	Z-ROTAN
1	101	0.00000	0.00000	0.00000	0.00000	0.00000	-0.00877
	102	0.00000	0.00000	0.00000	0.00000	0.00000	0.01882
	103	0.00000	0.00000	0.00000	0.00000	0.00000	0.00920
	104	0.00000	0.00000	0.00000	0.00000	0.00000	0.02015
2	101	-0.00607	-0.27302	0.00000	0.00000	0.00000	0.00409
	102	0.00837	0.58702	0.00000	0.00000	0.00000	-0.00893
	103	0.00300	0.28800	0.00000	0.00000	0.00000	-0.00438
	104	0.00939	0.62902	0.00000	0.00000	0.00000	-0.00954
3	101	-0.00955	-0.07493	0.00000	0.00000	0.00000	0.00000
	102	0.01317	0.10391	0.00000	0.00000	0.00000	-0.00354
	103	0.00472	0.03739	0.00000	0.00000	0.00000	-0.00265
	104	0.01478	0.11644	0.00000	0.00000	0.00000	-0.00354
4	101	-0.01910	0.00000	0.00000	0.00000	0.00000	0.00877
	102	0.02635	0.00000	0.00000	0.00000	0.00000	-0.01056
	103	0.00944	0.00000	0.00000	0.00000	0.00000	-0.00300
	104	0.02955	0.00000	0.00000	0.00000	0.00000	-0.01189
5	101	0.00000	0.00000	0.00000	0.00000	0.00000	-0.00092
	102	0.00000	0.00000	0.00000	0.00000	0.00000	0.00095
	103	0.00000	0.00000	0.00000	0.00000	0.00000	0.00026
	104	0.00000	0.00000	0.00000	0.00000	0.00000	0.00114
6	101	-0.00527	-0.07188	0.00000	0.00000	0.00000	0.00000
	102	0.00727	0.09916	0.00000	0.00000	0.00000	0.00000
	103	0.00261	0.03555	0.00000	0.00000	0.00000	0.00000
	104	0.00816	0.11123	0.00000	0.00000	0.00000	0.00000
7	101	-0.00527	0.00000	0.00000	0.00000	0.00000	0.00092
	102	0.00727	0.00000	0.00000	0.00000	0.00000	-0.00095
	103	0.00261	0.00000	0.00000	0.00000	0.00000	-0.00026
	104	0.00816	0.00000	0.00000	0.00000	0.00000	-0.00114

********** END OF LATEST ANALYSIS RESULT **********

99. UNIT INCHES KIP
100. PRINT MAXFORCE ENVELOPE

Software licensed to Halcrow	Job No ?	Sheet No 1	Rev
	Part ROOF TRUSS A-1		
Job Title ROOF TRUSS A-1	Ref 1		
	By BY	Date 08/11/12	Chd
Client	File 2 - Truss A - 1.std	Date/Time 16-Aug-2012 11:47	

Support Reactions

A-1

Node	L/C	Force-X (kip)	Force-Y (kip)	Force-Z (kip)	Moment-X (kip-ft)	Moment-Y (kip-ft)	Moment-Z (kip-ft)
1	101	-0.75	0.90	0.00	0.00	0.00	0.00
4	101	0.00	0.64	0.00	0.00	0.00	0.00
7	101	0.00	0.02	0.00	0.00	0.00	0.00
5	101	0.75	0.02	0.00	0.00	0.00	0.00
5	104	-1.16	-0.00	0.00	0.00	0.00	0.00
7	104	0.00	-0.00	0.00	0.00	0.00	0.00
4	104	0.00	-0.94	0.00	0.00	0.00	0.00
1	104	1.16	-1.57	0.00	0.00	0.00	0.00

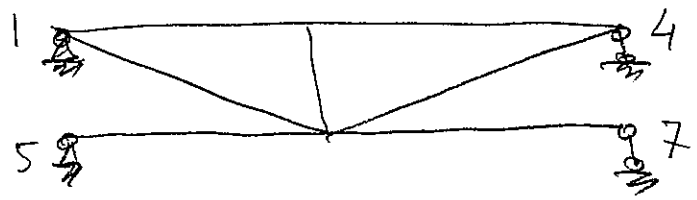

ROOF TRUSS

B - 1

Software licensed to Halcrow	Job No ?	Sheet No 1	Rev
	Part ROOF TRUSS B-1		
Job Title ROOF TRUSS B-1	Ref 1		
	By BY	Date 08/11/12	Chd
Client	File 3 - Truss B - 1.std	Date/Time 13-Aug-2012 15:12	

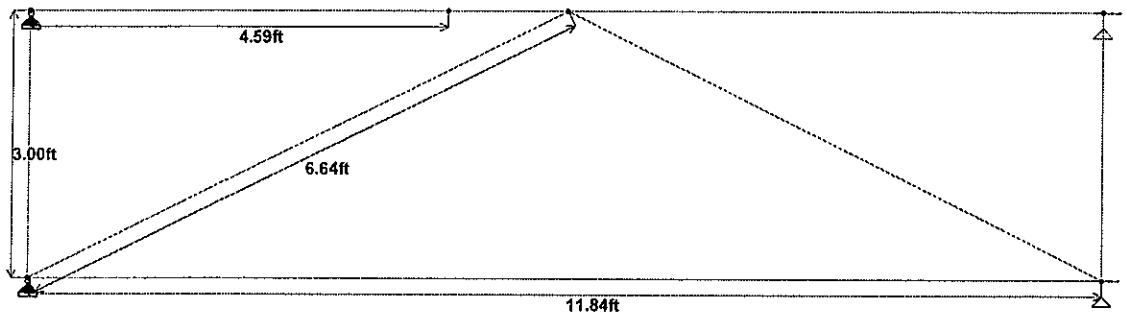

Load 1

Software licensed to Halcrow	Job No ?	Sheet No 1	Rev
	Part ROOF TRUSS B-1		
Job Title ROOF TRUSS B-1	Ref 1		
	By BY	Date 08/11/12	Chd
Client	File 3 - Truss B - 1.std	Date/Time 13-Aug-2012 15:46	

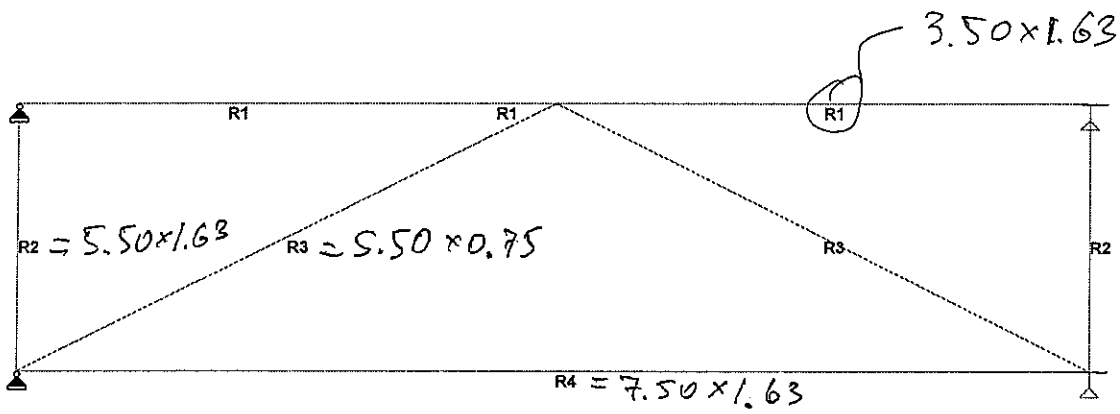

Load 1

```
STAAD SPACE DESIGN OF TRUSS
START JOB INFORMATION
JOB NAME ROOF TRUSS B-1
JOB NO ?
JOB PART ROOF TRUSS B-1
JOB REF 1
ENGINEER NAME BY
*                                          *********************************
*                                          *                               *
*                                          *                               *
*                                          *        ROOF TRUSS B-1         *
*                                          *                               *
*                                          *                               *
*                                          *********************************
ENGINEER DATE 08/11/12
END JOB INFORMATION
INPUT WIDTH 79
*
UNIT FEET KIP
JOINT COORDINATES
1 0 0 0; 2 4.59 0 0; 3 5.92 0 0; 4 11.84 0 0; 5 0 -3 0; 6 11.84 -3 0;
*
MEMBER INCIDENCES
1 1 2; 2 2 3; 3 3 4; 4 1 5; 5 3 5; 6 3 6; 7 4 6; 8 5 6;
*
*
*
MEMBER TRUSS
4 TO 8
*
***********CONSTANS********
*
*
UNIT INCHES KIP
DEFINE MATERIAL START
ISOTROPIC TIMBER
E 1600
POISSON 0.3
DENSITY 1.85e-005
*ALPHA 5.5e-006
END DEFINE MATERIAL
*
CONSTANTS
MATERIAL TIMBER ALL
*
MEMBER PROPERTY AMERICAN
1 TO 3 PRIS YD 3.5 ZD 1.625
4 7 PRIS YD 5.5 ZD 1.625
5 6 PRIS YD 5.5 ZD 0.75
8 PRIS YD 7.5 ZD 1.625
*************************
SUPPORTS
1 5 PINNED
4 6 FIXED BUT FX MY MZ
*
*******************************************************
UNIT FEET POUND
LOAD 1 S/W
SELFWEIGHT Y -1
*
LOAD 2 DR (ROOF DL)
*Truss c/c 2'
*Load 2' x 11 psf = 22 p/ft
MEMBER LOAD
1 TO 3 UNI GY -22
*
LOAD 3 LR (ROOF LL)
*Truss c/c 2'
*Load  2' x 20 psf = 40 p/ft
MEMBER LOAD
1 TO 3 UNI GY -40
```

```
1 TO 3 UNI GY -40
*
LOAD 4 WIND UPLIFT
*Truss c/c 2'
*Load  2' x  95 psf = 190 p/ft (Zone 1)
*Load  2' x 132 psf = 264 p/ft (Zone 2)
MEMBER LOAD
1 UNI GY 264
2 3 UNI GY 190
*
*******************************************************
LOAD COMB 101 (DL+LR) (EQ. 16-10)
1 1.0 2 1.0 3 1.0
*
LOAD COMB 102 (DL+0.6W) (EQ. 16-12)
1 1.0 2 1.0 4 0.6
*
LOAD COMB 103 (DL+0.45W+0.75LR) (EQ. 16-13)
1 1.0 2 1.0 4 0.45 3 0.75
*
LOAD COMB 104 (0.6DL+0.6W) (EQ. 16-14)
1 0.6 2 0.6 4 0.6
*******************************************************
PERFORM ANALYSIS PRINT STATICS CHECK
LOAD LIST 101 TO 104
PRINT MEMBER FORCES
PRINT SUPPORT REACTION
PRINT JOINT DISPLACEMENTS
UNIT INCHES KIP
PRINT MAXFORCE ENVELOPE
PRINT ALL
FINISH
```

Software licensed to Halcrow	Job No ?	Sheet No 1	Rev
	Part ROOF TRUSS B-1		
Job Title ROOF TRUSS B-1	Ref 1		
	By BY	Date 08/11/12	Chd
Client	File 3 - Truss B - 1.std	Date/Time 13-Aug-2012 15:14	

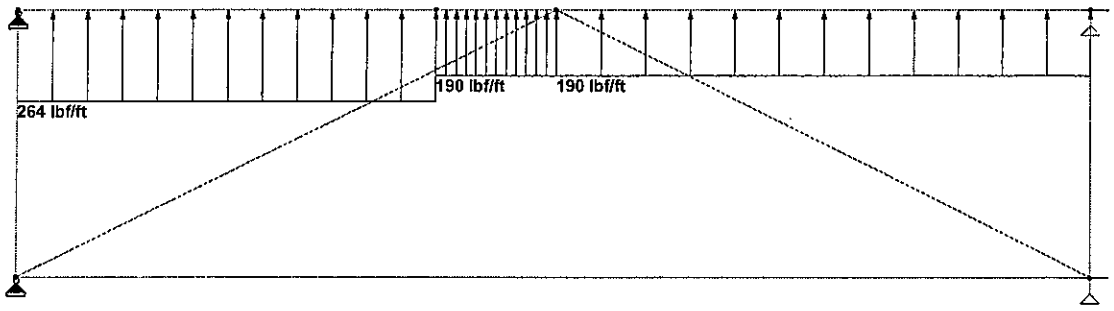

Load 4

Software licensed to Halcrow	Job No ?	Sheet No 1	Rev
	Part ROOF TRUSS B-1		
Job Title ROOF TRUSS B-1	Ref 1		
	By BY	Date 08/11/12	Chd
Client	File 3 - Truss B - 1.std	Date/Time 13-Aug-2012 15:46	

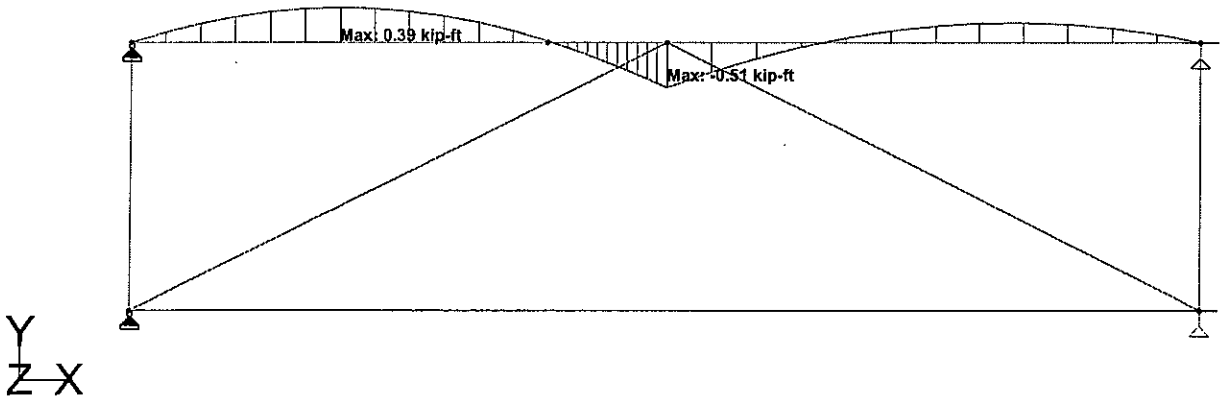

Load 104 : Bending Z
Moment - kip-ft

Software licensed to Halcrow	Job No ?	Sheet No 1	Rev
	Part ROOF TRUSS B-1		
Job Title ROOF TRUSS B-1	Ref 1		
	By BY	Date 08/11/12	Chd
Client	File 3 - Truss B - 1.std	Date/Time 13-Aug-2012 15:46	

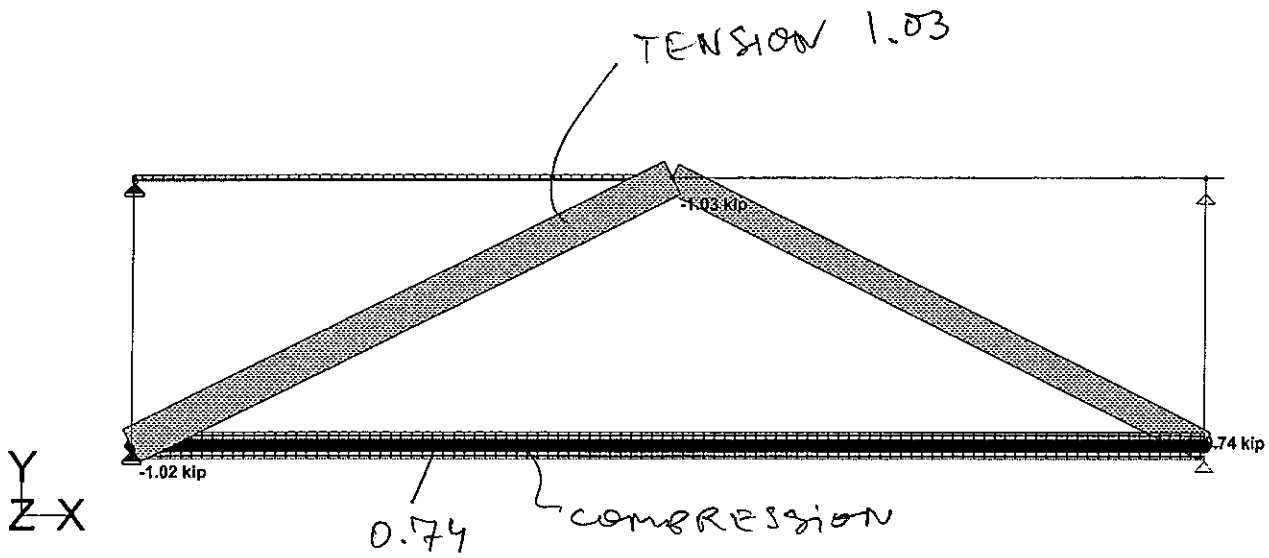

Load 104 : Axial Force
Force - kip

Software licensed to Halcrow	Job No ?	Sheet No 1	Rev
	Part ROOF TRUSS B-1		
Job Title ROOF TRUSS B-1	Ref 1		
	By BY	Date 08/11/12	Chd
Client	File 3 - Truss B - 1.std	Date/Time 13-Aug-2012 15:46	

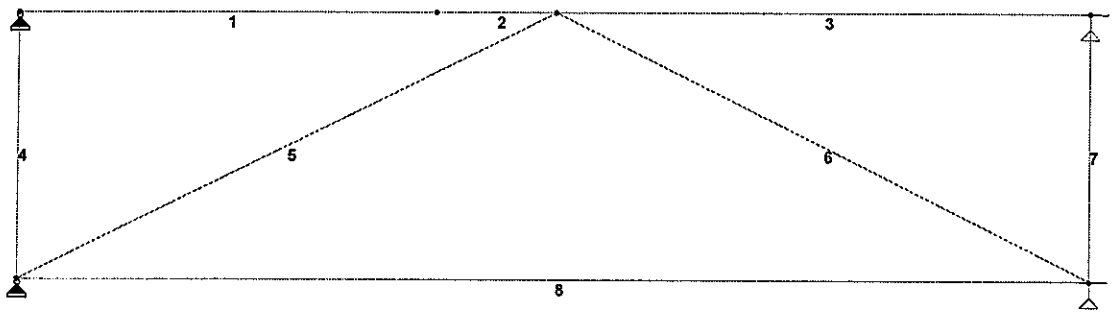

Load 1

Beam	L/C	Node	Axial Force (kip)	Shear-Y (kip)	Shear-Z (kip)	Torsion (kip-ft)	Moment-Y (kip-ft)	Moment-Z (kip-ft)
1	101	1	-0.10	0.14	0.00	0.00	0.00	-0.00
		2	0.10	0.15	0.00	0.00	0.00	-0.02
2	101	2	-0.10	-0.15	0.00	0.00	0.00	0.02
		3	0.10	0.23	0.00	0.00	0.00	-0.27
3	101	3	-0.00	0.23	0.00	0.00	0.00	0.27
		4	0.00	0.14	0.00	0.00	0.00	0.00
4	101	1	-0.00	0.00	0.00	0.00	0.00	0.00
		5	-0.00	0.00	0.00	0.00	0.00	0.00
5	101	3	0.58	0.00	0.00	0.00	0.00	0.00
		5	-0.58	0.00	0.00	0.00	0.00	0.00
6	101	3	0.46	0.00	0.00	0.00	0.00	0.00
		6	-0.47	0.00	0.00	0.00	0.00	0.00
7	101	4	-0.00	0.00	0.00	0.00	0.00	0.00
		6	-0.00	0.00	0.00	0.00	0.00	0.00
8	101	5	-0.42	0.02	0.00	0.00	0.00	0.00
		6	0.42	0.02	0.00	0.00	0.00	0.00

Beam	L/C	Node	Axial Force (kip)	Shear-Y (kip)	Shear-Z (kip)	Torsion (kip-ft)	Moment-Y (kip-ft)	Moment-Z (kip-ft)
1	104	1	0.18	-0.34	0.00	0.00	0.00	-0.00
		2	-0.18	-0.33	0.00	0.00	0.00	-0.02
2	104	2	0.18	0.33	0.00	0.00	0.00	0.02
		3	-0.18	-0.46	0.00	0.00	0.00	0.51
3	104	3	-0.00	-0.38	0.00	0.00	0.00	-0.51
		4	0.00	-0.21	0.00	0.00	0.00	0.00
4	104	1	-0.00	0.00	0.00	0.00	0.00	0.00
		5	-0.00	0.00	0.00	0.00	0.00	0.00
5	104	3	-1.03	0.00	0.00	0.00	0.00	0.00
		5	1.02	0.00	0.00	0.00	0.00	0.00
6	104	3	-0.83	0.00	0.00	0.00	0.00	0.00
		6	0.83	0.00	0.00	0.00	0.00	0.00
7	104	4	-0.00	0.00	0.00	0.00	0.00	0.00
		6	-0.00	0.00	0.00	0.00	0.00	0.00
8	104	5	0.74	0.01	0.00	0.00	0.00	0.00
		6	-0.74	0.01	0.00	0.00	0.00	0.00

Software licensed to Halcrow	Job No ?	Sheet No 1	Rev
	Part ROOF TRUSS B-1		
Job Title ROOF TRUSS B-1	Ref 1		
	By BY	Date 08/11/12	Chd
Client	File 3 - Truss B - 1.std	Date/Time 13-Aug-2012 15:46	

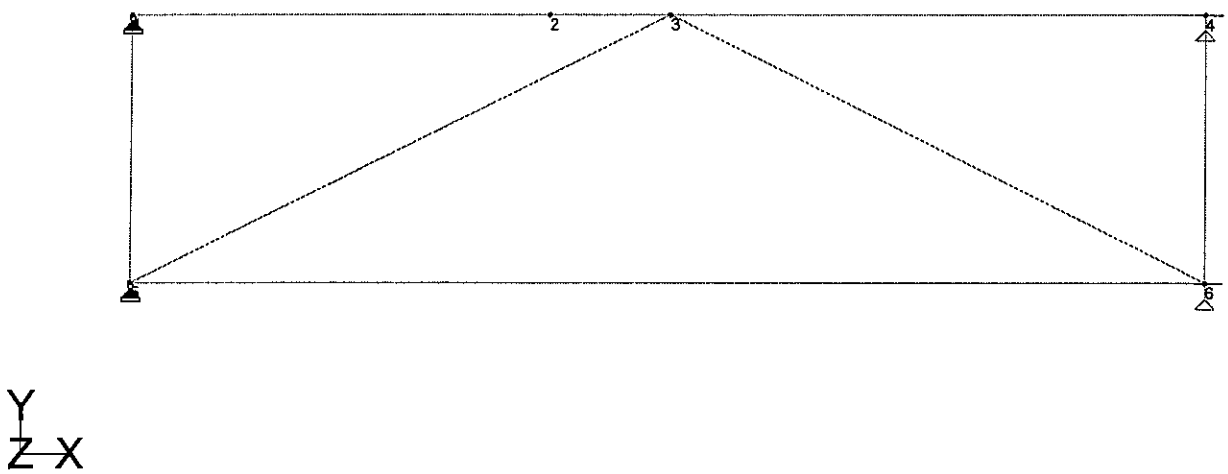

Load 1

JOINT DISPLACEMENT (INCH RADIANS) STRUCTURE TYPE = SPACE

JOINT	LOAD	X-TRANS	Y-TRANS	Z-TRANS	X-ROTAN	Y-ROTAN	Z-ROTAN
1	101	0.00000	0.00000	0.00000	0.00000	0.00000	-0.00462
	102	0.00000	0.00000	0.00000	0.00000	0.00000	0.01081
	103	0.00000	0.00000	0.00000	0.00000	0.00000	0.00550
	104	0.00000	0.00000	0.00000	0.00000	0.00000	0.01149
2	101	0.00060	-0.04673	0.00000	0.00000	0.00000	0.00274
	102	-0.00097	0.11715	0.00000	0.00000	0.00000	-0.00681
	103	-0.00039	0.06147	0.00000	0.00000	0.00000	-0.00356
	104	-0.00106	0.12408	0.00000	0.00000	0.00000	-0.00721
3	101	0.00077	-0.01691	0.00000	0.00000	0.00000	0.00000
	102	-0.00125	0.02753	0.00000	0.00000	0.00000	-0.00250
	103	-0.00051	0.01114	0.00000	0.00000	0.00000	-0.00188
	104	-0.00137	0.03007	0.00000	0.00000	0.00000	-0.00250
4	101	0.00077	0.00000	0.00000	0.00000	0.00000	0.00462
	102	-0.00125	0.00000	0.00000	0.00000	0.00000	-0.00545
	103	-0.00051	0.00000	0.00000	0.00000	0.00000	-0.00147
	104	-0.00137	0.00000	0.00000	0.00000	0.00000	-0.00613
5	101	0.00000	0.00000	0.00000	0.00000	0.00000	0.00000
	102	0.00000	0.00000	0.00000	0.00000	0.00000	0.00000
	103	0.00000	0.00000	0.00000	0.00000	0.00000	0.00000
	104	0.00000	0.00000	0.00000	0.00000	0.00000	0.00000
6	101	0.00303	0.00000	0.00000	0.00000	0.00000	0.00000
	102	-0.00493	0.00000	0.00000	0.00000	0.00000	0.00000
	103	-0.00200	0.00000	0.00000	0.00000	0.00000	0.00000
	104	-0.00539	0.00000	0.00000	0.00000	0.00000	0.00000

********** END OF LATEST ANALYSIS RESULT **********

99. UNIT INCHES KIP
100. PRINT MAXFORCE ENVELOPE

Software licensed to Halcrow	Job No ?	Sheet No 1	Rev
	Part ROOF TRUSS B-1		
Job Title ROOF TRUSS B-1	Ref 1		
	By BY	Date 08/11/12	Chd
Client	File 3 - Truss B - 1.std	Date/Time 16-Aug-2012 14:14	

Support Reactions

B-1

Node	L/C	Force-X (kip)	Force-Y (kip)	Force-Z (kip)	Moment-X (kip-ft)	Moment-Y (kip-ft)	Moment-Z (kip-ft)
5	101	0.10	0.28	0.00	0.00	0.00	0.00
6	101	0.00	0.23	0.00	0.00	0.00	0.00
4	101	0.00	0.14	0.00	0.00	0.00	0.00
1	101	-0.10	0.14	0.00	0.00	0.00	0.00
4	104	0.00	-0.21	0.00	0.00	0.00	0.00
1	104	0.18	-0.33	0.00	0.00	0.00	0.00
6	104	0.00	-0.36	0.00	0.00	0.00	0.00
5	104	-0.18	-0.45	0.00	0.00	0.00	0.00

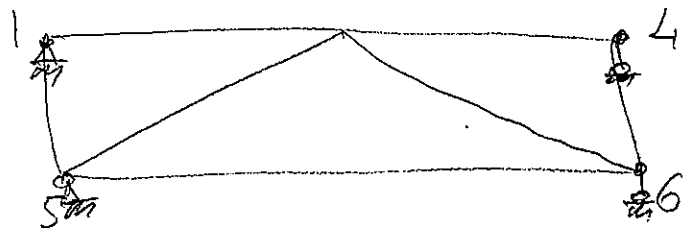

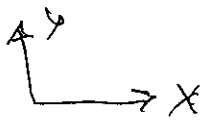

ROOF TRUSS

B - 2

Software licensed to Halcrow	Job No ?	Sheet No 1	Rev
	Part ROOF TRUSS B-2		
Job Title ROOF TRUSS B-2	Ref 1		
	By BY	Date 08/11/12	Chd
Client	File 4 - Truss B - 2.std	Date/Time 13-Aug-2012 15:21	

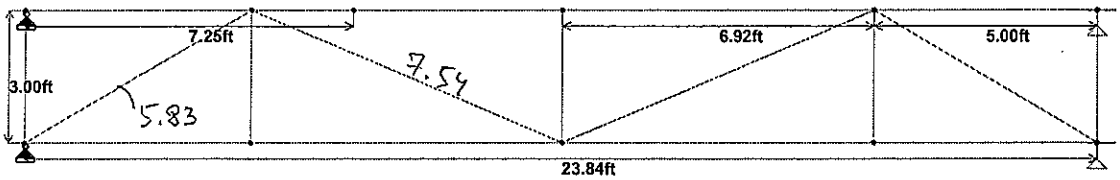

Load 1

Software licensed to Halcrow	Job No ?	Sheet No 1	Rev
	Part ROOF TRUSS B-2		
Job Title ROOF TRUSS B-2	Ref 1		
	By BY	Date 08/11/12	Chd
Client	File 4 - Truss B - 2.std	Date/Time 13-Aug-2012 15:59	

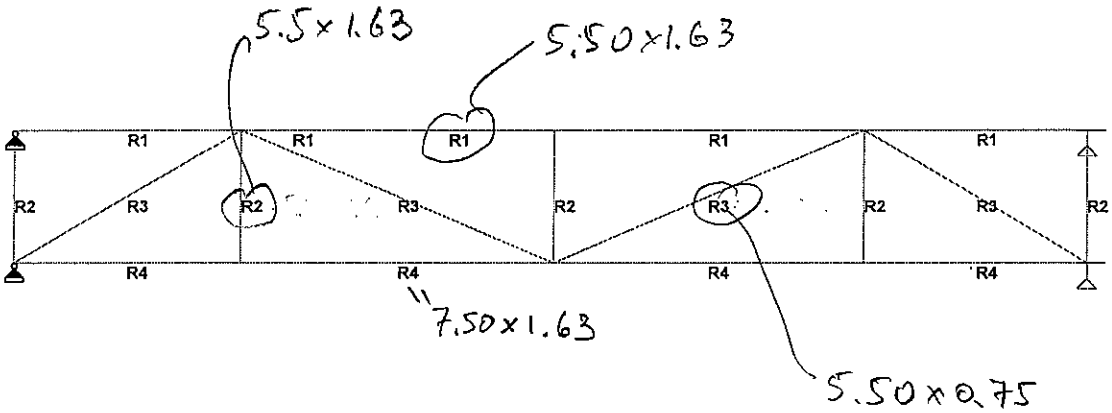

Load 1

```
STAAD SPACE DESIGN OF TRUSS
START JOB INFORMATION
JOB NAME ROOF TRUSS B-2
JOB NO ?
JOB PART ROOF TRUSS B-2
JOB REF 1
ENGINEER NAME BY
*                                          *********************************
*                                          *                               *
*                                          *                               *
*                                          *         ROOF TRUSS B-2        *
*                                          *                               *
*                                          *                               *
*                                          *********************************
ENGINEER DATE 08/11/12
END JOB INFORMATION
INPUT WIDTH 79
*
UNIT FEET KIP
JOINT COORDINATES
1 0 0 0; 2 5 0 0; 3 7.25 0 0; 4 11.92 0 0; 5 18.84 0 0; 6 23.84 0 0;
7 0 -3 0; 8 5 -3 0;  9 11.92 -3 0; 10 18.84 -3 0; 11 23.84 -3 0;

*
MEMBER INCIDENCES
1 1 2; 2 2 3; 3 3 4; 4 4 5; 5 5 6;
6 1 7; 7 2 7; 8 2 8; 9 2 9; 10 4 9; 11 5 9; 12 5 10; 13 5 11; 14 6 11;
15 7 8; 16 8 9; 17 9 10; 18 10 11;
*
*
*
MEMBER TRUSS
6 TO 14
*
***********CONSTANS********
*
UNIT INCHES KIP
DEFINE MATERIAL START
*
ISOTROPIC TIMBER
E 1600
POISSON 0.3
DENSITY 1.85e-005
*ALPHA 5.5e-006
END DEFINE MATERIAL
*
CONSTANTS
MATERIAL TIMBER ALL
*
MEMBER PROPERTY AMERICAN
1 TO 5 PRIS YD 5.5 ZD 1.625
6 8 10 12 14 PRIS YD 5.5 ZD 1.625
7 9 11 13 PRIS YD 5.5 ZD 0.75
15 TO 18 PRIS YD 7.5 ZD 1.625
*************************
SUPPORTS
1 7 PINNED
6 11 FIXED BUT FX MY MZ
*
*******************************************************
UNIT FEET POUND
LOAD 1 S/W
SELFWEIGHT Y -1
*
LOAD 2 DR (ROOF DL)
*Truss c/c 2'
*Load 2' x 11 psf = 22 p/ft
MEMBER LOAD
1 TO 5 UNI GY -22
*
LOAD 3 LR (ROOF LL)
```

```
LOAD 3 LR (ROOF LL)
*Truss c/c 2'
*Load  2' x 20 psf = 40 p/ft
MEMBER LOAD
1 TO 5 UNI GY -40
*
LOAD 4 WIND UPLIFT
*Truss c/c 2'
*Load  2' x  95 psf = 190 p/ft (Zone 1)
*Load  2' x 132 psf = 264 p/ft (Zone 2)
MEMBER LOAD
1 2 UNI GY 264
3 4 5 UNI GY 190
*
*******************************************************
LOAD COMB 101 (DL+LR) (EQ. 16-10)
1 1.0 2 1.0 3 1.0
*
LOAD COMB 102 (DL+0.6W) (EQ. 16-12)
1 1.0 2 1.0 4 0.6
*
LOAD COMB 103 (DL+0.45W+0.75LR) (EQ. 16-13)
1 1.0 2 1.0 4 0.45 3 0.75
*
LOAD COMB 104 (0.6DL+0.6W) (EQ. 16-14)
1 0.6 2 0.6 4 0.6
*******************************************************
PERFORM ANALYSIS PRINT STATICS CHECK
LOAD LIST 101 TO 104
PRINT MEMBER FORCES
PRINT SUPPORT REACTION
PRINT JOINT DISPLACEMENTS
UNIT INCHES KIP
PRINT MAXFORCE ENVELOPE
PRINT ALL
FINISH
```

Software licensed to Halcrow	Job No ?	Sheet No 1	Rev
	Part ROOF TRUSS B-2		
Job Title ROOF TRUSS B-2	Ref 1		
	By BY	Date 08/11/12	Chd
Client	File 4 - Truss B - 2.std	Date/Time 13-Aug-2012 15:21	

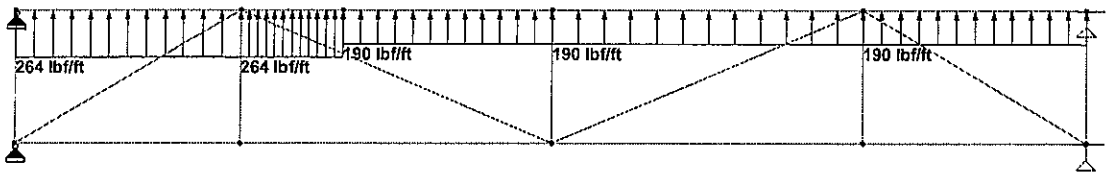

Y
Z X

Load 4

Software licensed to Halcrow	Job No ?	Sheet No 1	Rev
	Part ROOF TRUSS B-2		
Job Title ROOF TRUSS B-2	Ref 1		
	By BY	Date 08/11/12	Chd
Client	File 4 - Truss B - 2.std	Date/Time 13-Aug-2012 15:21	

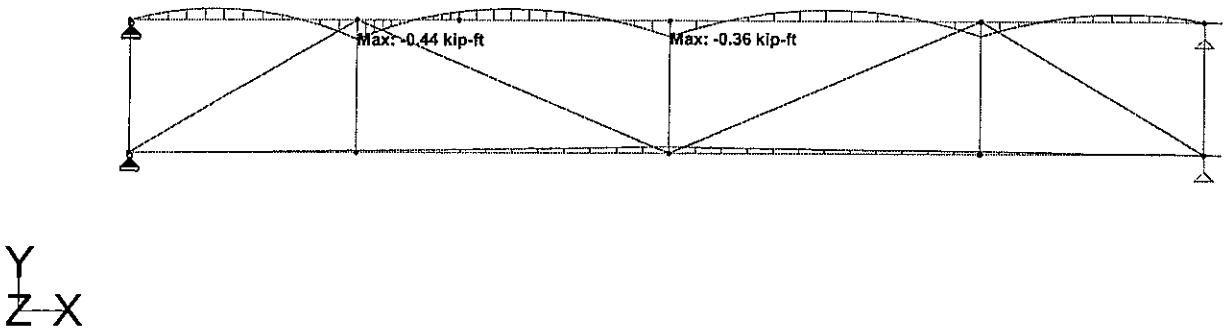

Load 104 : Bending Z
Moment - kip-ft

Software licensed to Halcrow	Job No ?	Sheet No 1	Rev
	Part ROOF TRUSS B-2		
Job Title ROOF TRUSS B-2	Ref 1		
	By BY	Date 08/11/12	Chd
Client	File 4 - Truss B - 2.std	Date/Time 13-Aug-2012 15:36	

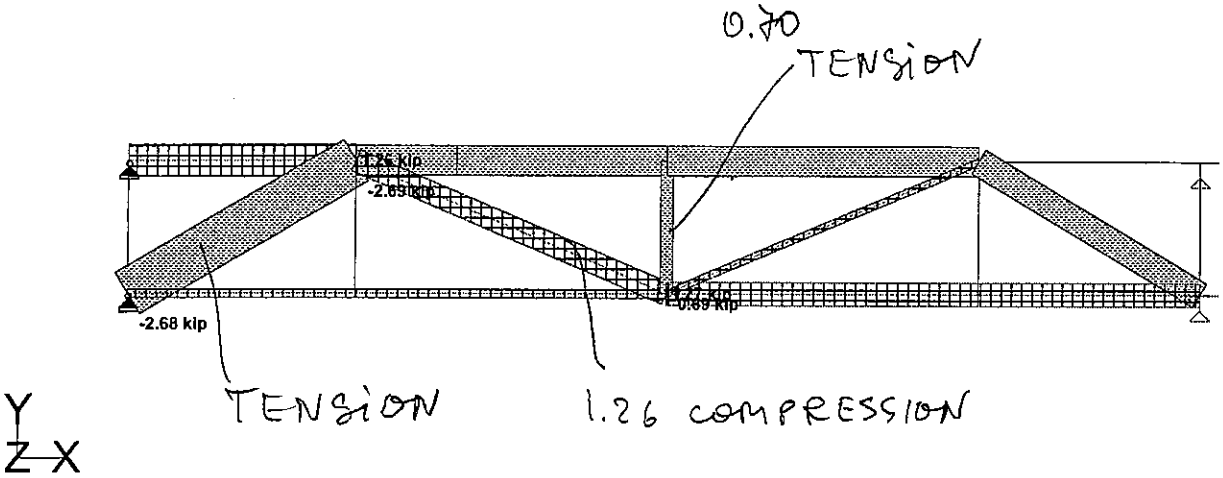

Load 104 : Axial Force
Force - kip

Software licensed to Halcrow	Job No ?	Sheet No 1	Rev
	Part ROOF TRUSS B-2		
Job Title ROOF TRUSS B-2	Ref 1		
	By BY	Date 08/11/12	Chd
Client	File 4 - Truss B - 2.std	Date/Time 13-Aug-2012 15:59	

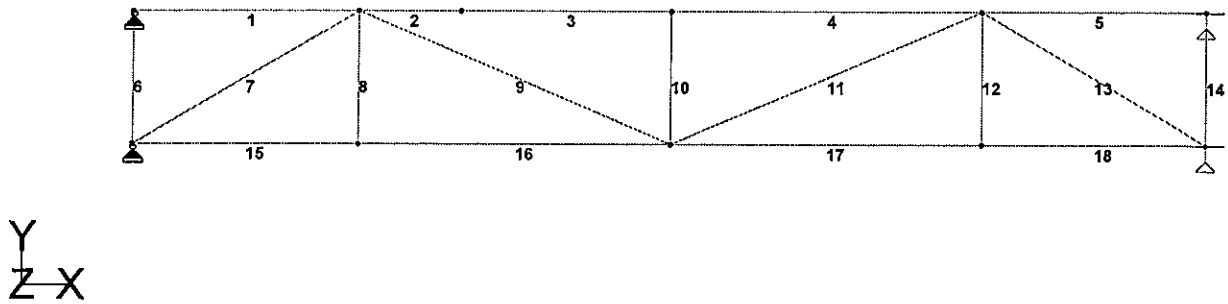

Load 1

Beam	L/C	Node	Axial Force (kip)	Shear-Y (kip)	Shear-Z (kip)	Torsion (kip-ft)	Moment-Y (kip-ft)	Moment-Z (kip-ft)
1	101	1	-1.13	0.11	0.00	0.00	0.00	-0.00
		2	1.13	0.21	0.00	0.00	0.00	-0.23
2	101	2	1.10	0.22	0.00	0.00	0.00	0.23
		3	-1.10	-0.08	0.00	0.00	0.00	0.11
3	101	3	1.10	0.08	0.00	0.00	0.00	-0.11
		4	-1.10	0.22	0.00	0.00	0.00	-0.23
4	101	4	1.10	0.22	0.00	0.00	0.00	0.23
		5	-1.10	0.22	0.00	0.00	0.00	-0.21
5	101	5	0.00	0.20	0.00	0.00	0.00	0.21
		6	0.00	0.12	0.00	0.00	0.00	0.00
6	101	1	-0.00	0.00	0.00	0.00	0.00	0.00
		7	-0.00	0.00	0.00	0.00	0.00	0.00
7	101	2	1.62	0.00	0.00	0.00	0.00	0.00
		7	-1.62	0.00	0.00	0.00	0.00	0.00
8	101	2	-0.04	0.00	0.00	0.00	0.00	0.00
		8	0.03	0.00	0.00	0.00	0.00	0.00
9	101	2	-0.92	0.00	0.00	0.00	0.00	0.00
		9	0.92	0.00	0.00	0.00	0.00	0.00
10	101	4	0.44	0.00	0.00	0.00	0.00	0.00
		9	-0.45	0.00	0.00	0.00	0.00	0.00
11	101	5	-0.22	0.00	0.00	0.00	0.00	0.00
		9	0.22	0.00	0.00	0.00	0.00	0.00
12	101	5	-0.02	0.00	0.00	0.00	0.00	0.00
		10	0.02	0.00	0.00	0.00	0.00	0.00
13	101	5	1.05	0.00	0.00	0.00	0.00	0.00
		11	-1.05	0.00	0.00	0.00	0.00	0.00
14	101	6	-0.00	0.00	0.00	0.00	0.00	0.00
		11	-0.00	0.00	0.00	0.00	0.00	0.00
15	101	7	-0.26	0.01	0.00	0.00	0.00	0.00
		8	0.26	0.01	0.00	0.00	0.00	-0.00
16	101	8	-0.26	0.02	0.00	0.00	0.00	0.00
		9	0.26	-0.00	0.00	0.00	0.00	0.09
17	101	9	-0.90	0.00	0.00	0.00	0.00	-0.09
		10	0.90	0.02	0.00	0.00	0.00	0.03
18	101	10	-0.90	0.00	0.00	0.00	0.00	-0.03
		11	0.90	0.01	0.00	0.00	0.00	0.00

Software licensed to Halcrow	Job No ?	Sheet No 1	Rev
	Part ROOF TRUSS B-2		
Job Title ROOF TRUSS B-2	Ref 1		
	By BY	Date 08/11/12	Chd
Client	File 4 - Truss B - 2.std	Date/Time 13-Aug-2012 15:59	

Beam	L/C	Node	Axial Force (kip)	Shear-Y (kip)	Shear-Z (kip)	Torsion (kip-ft)	Moment-Y (kip-ft)	Moment-Z (kip-ft)
1	104	1	1.81	-0.27	0.00	0.00	0.00	-0.00
		2	-1.81	-0.45	0.00	0.00	0.00	0.44
2	104	2	-1.65	-0.44	0.00	0.00	0.00	-0.44
		3	1.65	0.12	0.00	0.00	0.00	-0.18
3	104	3	-1.65	-0.12	0.00	0.00	0.00	0.18
		4	1.65	-0.35	0.00	0.00	0.00	0.36
4	104	4	-1.65	-0.35	0.00	0.00	0.00	-0.36
		5	1.65	-0.34	0.00	0.00	0.00	0.33
5	104	5	0.00	-0.32	0.00	0.00	0.00	-0.33
		6	0.00	-0.18	0.00	0.00	0.00	0.00
6	104	1	-0.00	0.00	0.00	0.00	0.00	0.00
		7	-0.00	0.00	0.00	0.00	0.00	0.00
7	104	2	-2.69	0.00	0.00	0.00	0.00	0.00
		7	2.68	0.00	0.00	0.00	0.00	0.00
8	104	2	-0.01	0.00	0.00	0.00	0.00	0.00
		8	0.00	0.00	0.00	0.00	0.00	0.00
9	104	2	1.26	0.00	0.00	0.00	0.00	0.00
		9	-1.27	0.00	0.00	0.00	0.00	0.00
10	104	4	-0.70	0.00	0.00	0.00	0.00	0.00
		9	0.69	0.00	0.00	0.00	0.00	0.00
11	104	5	0.37	0.00	0.00	0.00	0.00	0.00
		9	-0.37	0.00	0.00	0.00	0.00	0.00
12	104	5	-0.01	0.00	0.00	0.00	0.00	0.00
		10	0.01	0.00	0.00	0.00	0.00	0.00
13	104	5	-1.53	0.00	0.00	0.00	0.00	0.00
		11	1.53	0.00	0.00	0.00	0.00	0.00
14	104	6	-0.00	0.00	0.00	0.00	0.00	0.00
		11	-0.00	0.00	0.00	0.00	0.00	0.00
15	104	7	0.49	-0.00	0.00	0.00	0.00	0.00
		8	-0.49	0.01	0.00	0.00	0.00	-0.04
16	104	8	0.49	-0.01	0.00	0.00	0.00	0.04
		9	-0.49	0.02	0.00	0.00	0.00	-0.15
17	104	9	1.31	0.02	0.00	0.00	0.00	0.15
		10	-1.31	-0.01	0.00	0.00	0.00	-0.07
18	104	10	1.31	0.02	0.00	0.00	0.00	0.07
		11	-1.31	-0.01	0.00	0.00	0.00	0.00

Software licensed to Halcrow	Job No ?	Sheet No 1	Rev
	Part ROOF TRUSS B-2		
Job Title ROOF TRUSS B-2	Ref 1		
	By BY	Date 08/11/12	Chd
Client	File 4 - Truss B - 2.std	Date/Time 14-Aug-2012 08:32	

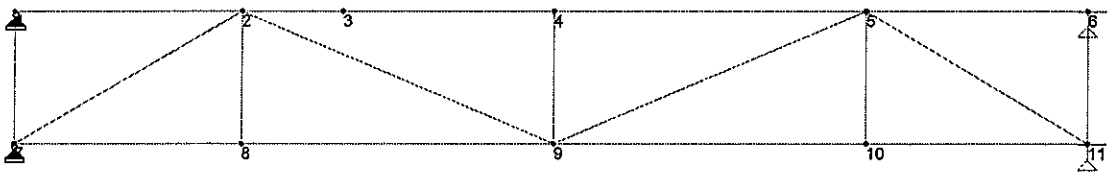

Load 1

JOINT DISPLACEMENT (INCH RADIANS) STRUCTURE TYPE = SPACE

JOINT	LOAD	X-TRANS	Y-TRANS	Z-TRANS	X-ROTAN	Y-ROTAN	Z-ROTAN
1	101	0.00000	0.00000	0.00000	0.00000	0.00000	-0.00128
	102	0.00000	0.00000	0.00000	0.00000	0.00000	0.00247
	103	0.00000	0.00000	0.00000	0.00000	0.00000	0.00115
	104	0.00000	0.00000	0.00000	0.00000	0.00000	0.00267
2	101	0.00476	-0.04138	0.00000	0.00000	0.00000	-0.00088
	102	-0.00681	0.06112	0.00000	0.00000	0.00000	0.00097
	103	-0.00252	0.02341	0.00000	0.00000	0.00000	0.00025
	104	-0.00760	0.06801	0.00000	0.00000	0.00000	0.00112
3	101	0.00268	-0.07647	0.00000	0.00000	0.00000	-0.00116
	102	-0.00403	0.10856	0.00000	0.00000	0.00000	0.00157
	103	-0.00157	0.03962	0.00000	0.00000	0.00000	0.00054
	104	-0.00448	0.12100	0.00000	0.00000	0.00000	0.00175
4	101	-0.00165	-0.08092	0.00000	0.00000	0.00000	-0.00008
	102	0.00173	0.10911	0.00000	0.00000	0.00000	0.00003
	103	0.00040	0.03796	0.00000	0.00000	0.00000	-0.00002
	104	0.00200	0.12256	0.00000	0.00000	0.00000	0.00004
5	101	-0.00806	-0.04919	0.00000	0.00000	0.00000	0.00091
	102	0.01026	0.06467	0.00000	0.00000	0.00000	-0.00122
	103	0.00333	0.02185	0.00000	0.00000	0.00000	-0.00042
	104	0.01160	0.07286	0.00000	0.00000	0.00000	-0.00137
6	101	-0.00806	0.00000	0.00000	0.00000	0.00000	0.00145
	102	0.01026	0.00000	0.00000	0.00000	0.00000	-0.00196
	103	0.00333	0.00000	0.00000	0.00000	0.00000	-0.00067
	104	0.01160	0.00000	0.00000	0.00000	0.00000	-0.00219
7	101	0.00000	0.00000	0.00000	0.00000	0.00000	-0.00071
	102	0.00000	0.00000	0.00000	0.00000	0.00000	0.00106
	103	0.00000	0.00000	0.00000	0.00000	0.00000	0.00041
	104	0.00000	0.00000	0.00000	0.00000	0.00000	0.00118
8	101	0.00079	-0.04146	0.00000	0.00000	0.00000	-0.00067
	102	-0.00138	0.06108	0.00000	0.00000	0.00000	0.00092
	103	-0.00061	0.02335	0.00000	0.00000	0.00000	0.00032
	104	-0.00151	0.06799	0.00000	0.00000	0.00000	0.00103
9	101	0.00189	-0.07979	0.00000	0.00000	0.00000	-0.00008
	102	-0.00330	0.10752	0.00000	0.00000	0.00000	0.00004
	103	-0.00145	0.03740	0.00000	0.00000	0.00000	-0.00002
	104	-0.00361	0.12081	0.00000	0.00000	0.00000	0.00005
10	101	0.00572	-0.04924	0.00000	0.00000	0.00000	0.00071
	102	-0.00824	0.06462	0.00000	0.00000	0.00000	-0.00093
	103	-0.00308	0.02179	0.00000	0.00000	0.00000	-0.00032
	104	-0.00919	0.07283	0.00000	0.00000	0.00000	-0.00105
11	101	0.00849	0.00000	0.00000	0.00000	0.00000	0.00089
	102	-0.01181	0.00000	0.00000	0.00000	0.00000	-0.00114
	103	-0.00426	0.00000	0.00000	0.00000	0.00000	-0.00037
	104	-0.01322	0.00000	0.00000	0.00000	0.00000	-0.00129

Software licensed to Halcrow	Job No ?	Sheet No 1	Rev
	Part ROOF TRUSS B-2		
Job Title ROOF TRUSS B-2	Ref 1		
	By BY	Date 08/11/12	Chd
Client	File 4 - Truss B - 2.std	Date/Time 14-Aug-2012 08:32	

Support Reactions

B-2

Node	L/C	Force-X (kip)	Force-Y (kip)	Force-Z (kip)	Moment-X (kip-ft)	Moment-Y (kip-ft)	Moment-Z (kip-ft)
7	101	1.13	0.85	0.00	0.00	0.00	0.00
11	101	0.00	0.56	0.00	0.00	0.00	0.00
6	101	0.00	0.12	0.00	0.00	0.00	0.00
1	101	-1.13	0.12	0.00	0.00	0.00	0.00
6	104	0.00	-0.18	0.00	0.00	0.00	0.00
1	104	1.81	-0.27	0.00	0.00	0.00	0.00
11	104	0.00	-0.79	0.00	0.00	0.00	0.00
7	104	-1.81	-1.38	0.00	0.00	0.00	0.00

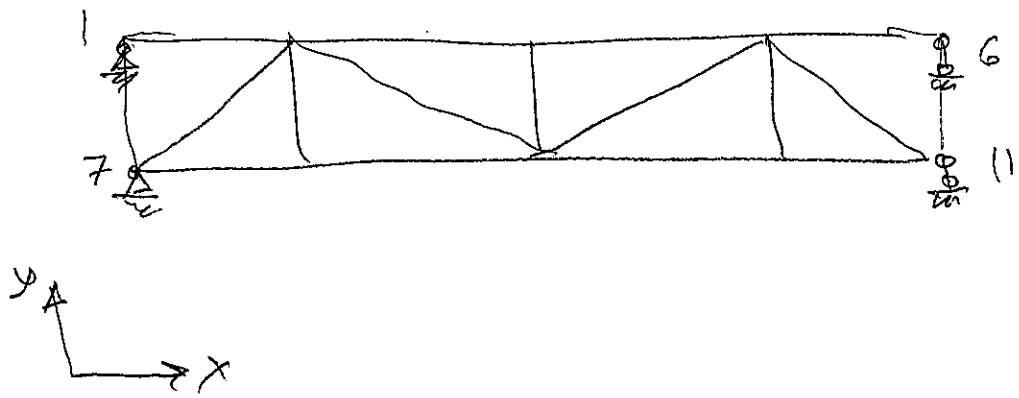

ROOF TRUSS

B - 3

Software licensed to Halcrow	Job No ?	Sheet No 1	Rev
	Part ROOF TRUSS B-3		
Job Title ROOF TRUSS B-3	Ref 1		
	By YB	Date 08/11/12	Chd
Client	File 5 - Truss B - 3.std	Date/Time 14-Aug-2012 07:25	

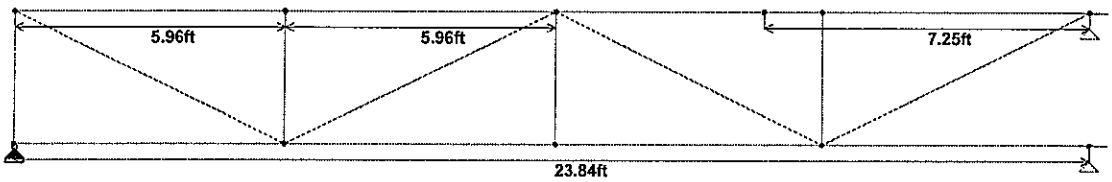

Load 1

Software licensed to Halcrow	Job No ?	Sheet No 1	Rev
	Part ROOF TRUSS B-3		
Job Title ROOF TRUSS B-3	Ref 1		
	By YB	Date 08/11/12	Chd
Client	File 5 - Truss B - 3.std	Date/Time 14-Aug-2012 07:25	

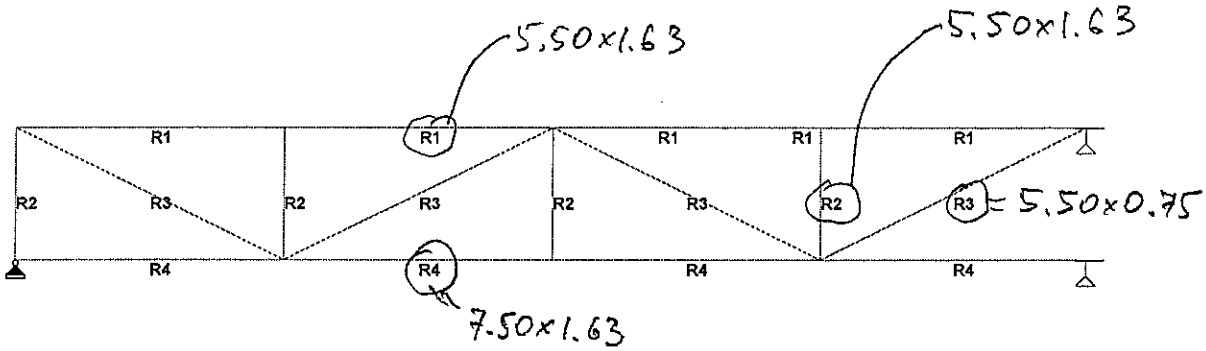

Load 1

```
STAAD SPACE DESIGN OF TRUSS
START JOB INFORMATION
JOB NAME ROOF TRUSS B-3
JOB NO ?
JOB PART ROOF TRUSS B-3
JOB REF 1
ENGINEER NAME YB
*                                          *********************************
*                                          *                               *
*                                          *                               *
*                                          *         ROOF  TRUSS B-3       *
*                                          *                               *
*                                          *                               *
*                                          *********************************
ENGINEER DATE 08/11/12
END JOB INFORMATION
INPUT WIDTH 79
*
UNIT FEET KIP
JOINT COORDINATES
1 0 0 0; 2 5.96 0 0; 3 11.92 0 0; 4 16.59 0 0; 5 17.88 0 0; 6 23.84 0 0;
7 0 -3 0; 8 5.96 -3 0; 9 11.92 -3 0; 10 17.88 -3 0; 11 23.84 -3 0;
*
MEMBER INCIDENCES
1 1 2; 2 2 3; 3 3 4; 4 4 5; 5 5 6;
6 1 7; 7 1 8; 8 2 8; 9 3 8; 10 3 9; 11 3 10;
12 5 10; 13 6 10; 14 7 8; 15 8 9; 16 9 10; 17 10 11;
*
*
*
MEMBER TRUSS
6 TO 13
*
***********CONSTANS********
*
UNIT INCHES KIP
DEFINE MATERIAL START
*
ISOTROPIC TIMBER
E 1600
POISSON 0.3
DENSITY 1.85e-005
*ALPHA 5.5e-006
END DEFINE MATERIAL
*
CONSTANTS
MATERIAL TIMBER ALL
*
MEMBER PROPERTY AMERICAN
1 TO 5 PRIS YD 5.5 ZD 1.625
6 8 10 12  PRIS YD 5.5 ZD 1.625
7 9 11 13 PRIS YD 5.5 ZD 0.75
14 TO 17 PRIS YD 7.5 ZD 1.625
*************************
SUPPORTS
7 PINNED
6 11 FIXED BUT FX MY MZ
*
*******************************************************
UNIT FEET POUND
LOAD 1 S/W
SELFWEIGHT Y -1
*
LOAD 2 DR (ROOF DL)
*Truss c/c 2'
*Load 2' x 11 psf = 22 p/ft
MEMBER LOAD
1 TO 5 UNI GY -22
*
LOAD 3 LR (ROOF LL)
*Truss c/c 2'
```

```
*Truss c/c 2'
*Load  2' x 20 psf = 40 p/ft
MEMBER LOAD
1 TO 5 UNI GY -40
*
LOAD 4 WIND UPLIFT
*Truss c/c 2'
*Load  2' x  95 psf = 190 p/ft (Zone 1)
*Load  2' x 132 psf = 264 p/ft (Zone 2)
MEMBER LOAD
4 5 UNI GY 264
1 2 3 UNI GY 190
*
*******************************************************
LOAD COMB 101 (DL+LR) (EQ. 16-10)
1 1.0 2 1.0 3 1.0
*
LOAD COMB 102 (DL+0.6W) (EQ. 16-12)
1 1.0 2 1.0 4 0.6
*
LOAD COMB 103 (DL+0.45W+0.75LR) (EQ. 16-13)
1 1.0 2 1.0 4 0.45 3 0.75
*
LOAD COMB 104 (0.6DL+0.6W) (EQ. 16-14)
1 0.6 2 0.6 4 0.6
*******************************************************
PERFORM ANALYSIS PRINT STATICS CHECK
LOAD LIST 101 TO 104
PRINT MEMBER FORCES
PRINT SUPPORT REACTION
PRINT JOINT DISPLACEMENTS
UNIT INCHES KIP
PRINT MAXFORCE ENVELOPE
PRINT ALL
FINISH
```

Software licensed to Halcrow	Job No ?	Sheet No 1	Rev
	Part ROOF TRUSS B-3		
Job Title ROOF TRUSS B-3	Ref 1		
	By YB	Date 08/11/12	Chd
Client	File 5 - Truss B - 3.std	Date/Time 14-Aug-2012 07:25	

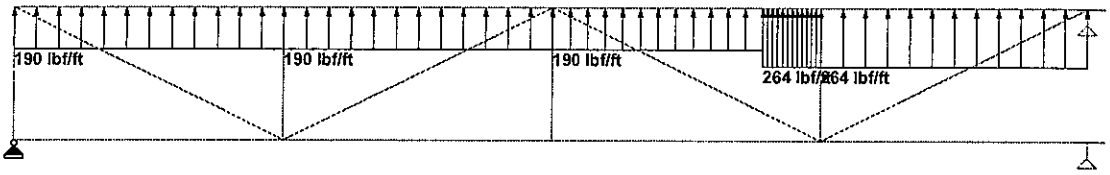

Y
Z X

Load 4

Software licensed to Halcrow	Job No ?	Sheet No 1	Rev
	Part ROOF TRUSS B-3		
Job Title ROOF TRUSS B-3	Ref 1		
	By YB	Date 08/11/12	Chd
Client	File 5 - Truss B - 3.std	Date/Time 14-Aug-2012 07:25	

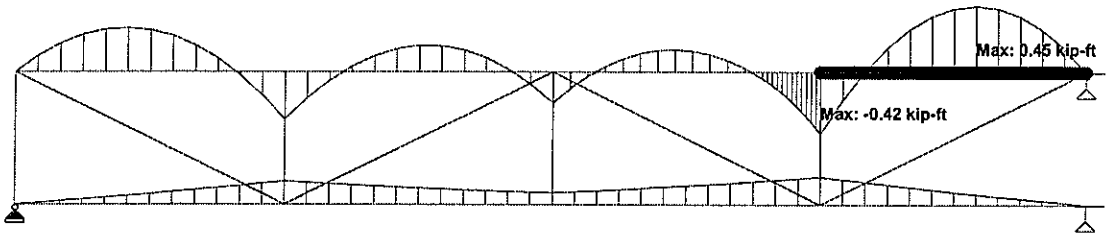

Load 104 : Bending Z
Moment - kip-ft

Software licensed to Halcrow	Job No ?	Sheet No 1	Rev
	Part ROOF TRUSS B-3		
Job Title ROOF TRUSS B-3	Ref 1		
	By YB	Date 08/11/12	Chd
Client	File 5 - Truss B - 3.std	Date/Time 14-Aug-2012 07:25	

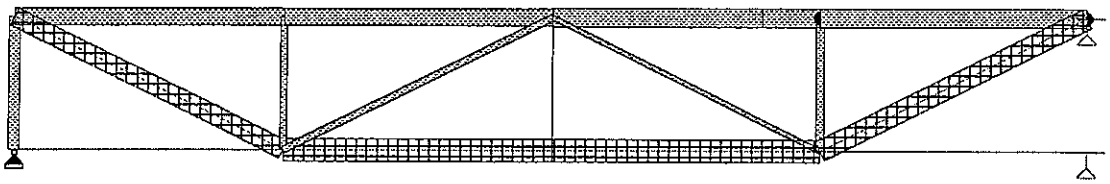

Load 104 : Axial Force

Software licensed to Halcrow	Job No ?	Sheet No 1	Rev
	Part ROOF TRUSS B-3		
Job Title ROOF TRUSS B-3	Ref 1		
	By YB	Date 08/11/12	Chd
Client	File 5 - Truss B - 3.std	Date/Time 14-Aug-2012 07:25	

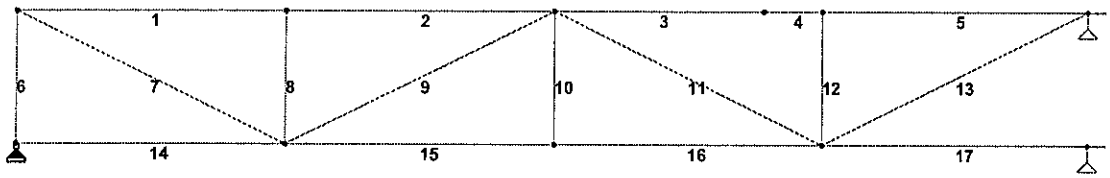

Load 104

Software licensed to Halcrow	Job No ?	Sheet No 1	Rev
	Part ROOF TRUSS B-3		
Job Title ROOF TRUSS B-3	Ref 1		
	By YB	Date 08/11/12	Chd
Client	File 5 - Truss B - 3.std	Date/Time 14-Aug-2012 07:25	

Beam	L/C	Node	Axial Force (kip)	Shear-Y (kip)	Shear-Z (kip)	Torsion (kip-ft)	Moment-Y (kip-ft)	Moment-Z (kip-ft)
1	101	1	1.26	0.16	0.00	0.00	0.00	0.00
		2	-1.26	0.22	0.00	0.00	0.00	-0.20
2	101	2	1.26	0.20	0.00	0.00	0.00	0.20
		3	-1.26	0.18	0.00	0.00	0.00	-0.14
3	101	3	1.26	0.18	0.00	0.00	0.00	0.14
		4	-1.26	0.12	0.00	0.00	0.00	0.00
4	101	4	1.26	-0.12	0.00	0.00	0.00	-0.00
		5	-1.26	0.20	0.00	0.00	0.00	-0.20
5	101	5	1.26	0.22	0.00	0.00	0.00	0.20
		6	-1.26	0.16	0.00	0.00	0.00	-0.00
6	101	1	0.79	0.00	0.00	0.00	0.00	0.00
		7	-0.80	0.00	0.00	0.00	0.00	0.00
7	101	1	-1.41	0.00	0.00	0.00	0.00	0.00
		8	1.41	0.00	0.00	0.00	0.00	0.00
8	101	2	0.42	0.00	0.00	0.00	0.00	0.00
		8	-0.43	0.00	0.00	0.00	0.00	0.00
9	101	3	0.45	0.00	0.00	0.00	0.00	0.00
		8	-0.45	0.00	0.00	0.00	0.00	0.00
10	101	3	-0.04	0.00	0.00	0.00	0.00	0.00
		9	0.03	0.00	0.00	0.00	0.00	0.00
11	101	3	0.45	0.00	0.00	0.00	0.00	0.00
		10	-0.45	0.00	0.00	0.00	0.00	0.00
12	101	5	0.42	0.00	0.00	0.00	0.00	0.00
		10	-0.43	0.00	0.00	0.00	0.00	0.00
13	101	6	-1.41	0.00	0.00	0.00	0.00	0.00
		10	1.41	0.00	0.00	0.00	0.00	0.00
14	101	7	-0.00	0.02	0.00	0.00	0.00	0.00
		8	0.00	-0.01	0.00	0.00	0.00	0.09
15	101	8	-1.66	0.00	0.00	0.00	0.00	-0.09
		9	1.66	0.01	0.00	0.00	0.00	0.05
16	101	9	-1.66	0.01	0.00	0.00	0.00	-0.05
		10	1.66	0.00	0.00	0.00	0.00	0.09
17	101	10	-0.00	-0.01	0.00	0.00	0.00	-0.09
		11	0.00	0.02	0.00	0.00	0.00	0.00

Software licensed to Halcrow	Job No ?	Sheet No 1	Rev
	Part ROOF TRUSS B-3		
Job Title ROOF TRUSS B-3	Ref 1		
	By YB	Date 08/11/12	Chd
Client	File 5 - Truss B - 3.std	Date/Time 14-Aug-2012 07:25	

Beam	L/C	Node	Axial Force (kip)	Shear-Y (kip)	Shear-Z (kip)	Torsion (kip-ft)	Moment-Y (kip-ft)	Moment-Z (kip-ft)
1	104	1	-1.87	-0.24	0.00	0.00	0.00	-0.00
		2	1.87	-0.35	0.00	0.00	0.00	0.32
2	104	2	-1.87	-0.32	0.00	0.00	0.00	-0.32
		3	1.87	-0.28	0.00	0.00	0.00	0.21
3	104	3	-2.08	-0.27	0.00	0.00	0.00	-0.21
		4	2.08	-0.20	0.00	0.00	0.00	0.04
4	104	4	-2.08	0.20	0.00	0.00	0.00	-0.04
		5	2.08	-0.38	0.00	0.00	0.00	0.42
5	104	5	-2.08	-0.50	0.00	0.00	0.00	-0.42
		6	2.08	-0.36	0.00	0.00	0.00	0.00
6	104	1	-1.18	0.00	0.00	0.00	0.00	0.00
		7	1.18	0.00	0.00	0.00	0.00	0.00
7	104	1	2.09	0.00	0.00	0.00	0.00	0.00
		8	-2.09	0.00	0.00	0.00	0.00	0.00
8	104	2	-0.67	0.00	0.00	0.00	0.00	0.00
		8	0.66	0.00	0.00	0.00	0.00	0.00
9	104	3	-0.74	0.00	0.00	0.00	0.00	0.00
		8	0.74	0.00	0.00	0.00	0.00	0.00
10	104	3	0.02	0.00	0.00	0.00	0.00	0.00
		9	-0.02	0.00	0.00	0.00	0.00	0.00
11	104	3	-0.51	0.00	0.00	0.00	0.00	0.00
		10	0.51	0.00	0.00	0.00	0.00	0.00
12	104	5	-0.88	0.00	0.00	0.00	0.00	0.00
		10	0.88	0.00	0.00	0.00	0.00	0.00
13	104	6	2.32	0.00	0.00	0.00	0.00	0.00
		10	-2.32	0.00	0.00	0.00	0.00	0.00
14	104	7	-0.00	-0.02	0.00	0.00	0.00	0.00
		8	0.00	0.03	0.00	0.00	0.00	-0.16
15	104	8	2.53	0.02	0.00	0.00	0.00	0.16
		9	-2.53	-0.01	0.00	0.00	0.00	-0.08
16	104	9	2.53	-0.01	0.00	0.00	0.00	0.08
		10	-2.53	0.02	0.00	0.00	0.00	-0.19
17	104	10	-0.00	0.04	0.00	0.00	0.00	0.19
		11	0.00	-0.03	0.00	0.00	0.00	-0.00

Software licensed to Halcrow	Job No ?	Sheet No 1	Rev
	Part ROOF TRUSS B-3		
Job Title ROOF TRUSS B-3	Ref 1		
	By YB	Date 08/11/12	Chd
Client	File 5 - Truss B - 3.std	Date/Time 14-Aug-2012 07:25	

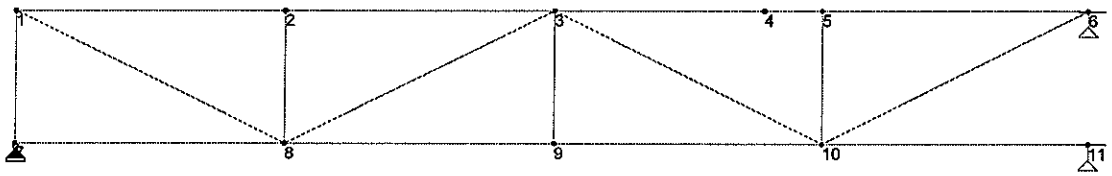

Load 1

JOINT DISPLACEMENT (INCH RADIANS) STRUCTURE TYPE = SPACE

JOINT	LOAD	X-TRANS	Y-TRANS	Z-TRANS	X-ROTAN	Y-ROTAN	Z-ROTAN
1	101	0.01840	-0.00200	0.00000	0.00000	0.00000	-0.00252
	102	-0.02505	0.00264	0.00000	0.00000	0.00000	0.00344
	103	-0.00883	0.00089	0.00000	0.00000	0.00000	0.00119
	104	-0.02812	0.00297	0.00000	0.00000	0.00000	0.00384
2	101	0.01212	-0.07760	0.00000	0.00000	0.00000	-0.00041
	102	-0.01675	0.10410	0.00000	0.00000	0.00000	0.00057
	103	-0.00600	0.03603	0.00000	0.00000	0.00000	0.00022
	104	-0.01877	0.11702	0.00000	0.00000	0.00000	0.00065
3	101	0.00583	-0.10022	0.00000	0.00000	0.00000	0.00001
	102	-0.00844	0.13723	0.00000	0.00000	0.00000	-0.00007
	103	-0.00317	0.04866	0.00000	0.00000	0.00000	-0.00005
	104	-0.00941	0.15395	0.00000	0.00000	0.00000	-0.00007
4	101	0.00090	-0.08860	0.00000	0.00000	0.00000	0.00088
	102	-0.00113	0.12147	0.00000	0.00000	0.00000	-0.00095
	103	-0.00036	0.04306	0.00000	0.00000	0.00000	-0.00023
	104	-0.00128	0.13620	0.00000	0.00000	0.00000	-0.00109
5	101	-0.00046	-0.07665	0.00000	0.00000	0.00000	0.00042
	102	0.00089	0.11153	0.00000	0.00000	0.00000	0.00007
	103	0.00042	0.04212	0.00000	0.00000	0.00000	0.00028
	104	0.00096	0.12430	0.00000	0.00000	0.00000	0.00000
6	101	-0.00675	0.00000	0.00000	0.00000	0.00000	0.00254
	102	0.01022	0.00000	0.00000	0.00000	0.00000	-0.00477
	103	0.00401	0.00000	0.00000	0.00000	0.00000	-0.00217
	104	0.01134	0.00000	0.00000	0.00000	0.00000	-0.00517
7	101	0.00000	0.00000	0.00000	0.00000	0.00000	-0.00125
	102	0.00000	0.00000	0.00000	0.00000	0.00000	0.00162
	103	0.00000	0.00000	0.00000	0.00000	0.00000	0.00054
	104	0.00000	0.00000	0.00000	0.00000	0.00000	0.00183
8	101	0.00000	-0.07652	0.00000	0.00000	0.00000	-0.00074
	102	0.00000	0.10259	0.00000	0.00000	0.00000	0.00102
	103	0.00000	0.03550	0.00000	0.00000	0.00000	0.00036
	104	0.00000	0.11535	0.00000	0.00000	0.00000	0.00114
9	101	0.00608	-0.10030	0.00000	0.00000	0.00000	0.00001
	102	-0.00826	0.13726	0.00000	0.00000	0.00000	0.00007
	103	-0.00290	0.04864	0.00000	0.00000	0.00000	0.00006
	104	-0.00928	0.15400	0.00000	0.00000	0.00000	0.00007
10	101	0.01216	-0.07558	0.00000	0.00000	0.00000	0.00074
	102	-0.01652	0.10948	0.00000	0.00000	0.00000	-0.00102
	103	-0.00581	0.04118	0.00000	0.00000	0.00000	-0.00036
	104	-0.01855	0.12208	0.00000	0.00000	0.00000	-0.00114
11	101	0.01216	0.00000	0.00000	0.00000	0.00000	0.00123
	102	-0.01652	0.00000	0.00000	0.00000	0.00000	-0.00176
	103	-0.00581	0.00000	0.00000	0.00000	0.00000	-0.00066
	104	-0.01855	0.00000	0.00000	0.00000	0.00000	-0.00197

Software licensed to Halcrow	Job No ?	Sheet No 1	Rev
	Part ROOF TRUSS B-3		
Job Title ROOF TRUSS B-3	Ref 1		
	By YB	Date 08/11/12	Chd
Client	File 5 - Truss B - 3.std	Date/Time 14-Aug-2012 07:25	

Support Reactions

B-3

Node	L/C	Force-X (kip)	Force-Y (kip)	Force-Z (kip)	Moment-X (kip*ft)	Moment-Y (kip*ft)	Moment-Z (kip*ft)
7	101	-0.00	0.82	0.00	0.00	0.00	0.00
6	101	0.00	0.79	0.00	0.00	0.00	0.00
11	101	0.00	0.02	0.00	0.00	0.00	0.00
11	104	0.00	-0.03	0.00	0.00	0.00	0.00
7	104	-0.00	-1.20	0.00	0.00	0.00	0.00
6	104	0.00	-1.40	0.00	0.00	0.00	0.00

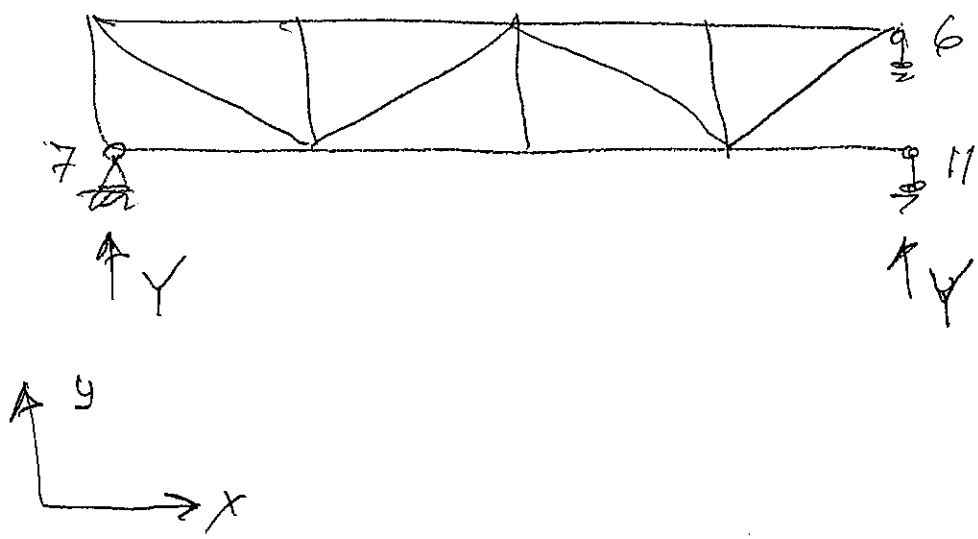

ROOF TRUSS

B - 4

Software licensed to Halcrow	Job No ?	Sheet No 1	Rev
	Part ROOF TRUSS B-4		
Job Title ROOF TRUSS B-4	Ref 1		
	By YB	Date 08/11/12	Chd
Client	File 6 - Truss B - 4.std	Date/Time 14-Aug-2012 07:38	

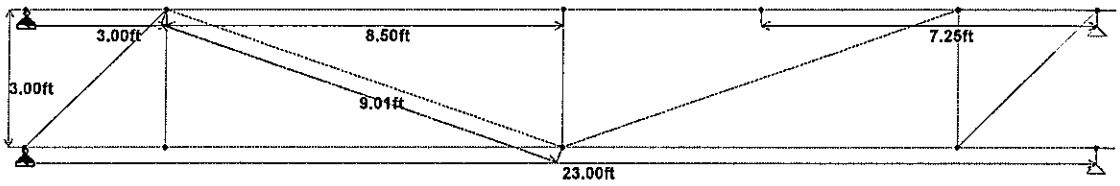

Load 1

Software licensed to Halcrow	Job No ?	Sheet No 1	Rev
	Part ROOF TRUSS B-4		
Job Title ROOF TRUSS B-4	Ref 1		
	By YB	Date 08/11/12	Chd
Client	File 6 - Truss B - 4.std	Date/Time 14-Aug-2012 07:38	

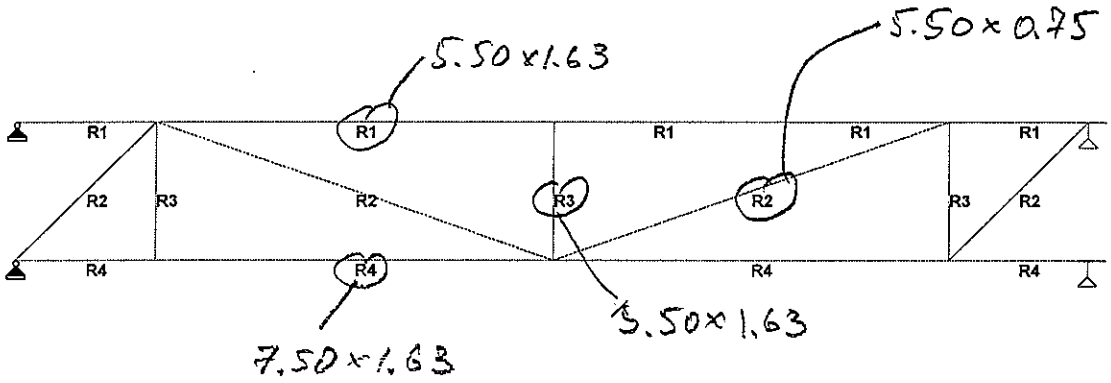

Load 1

```
STAAD SPACE DESIGN OF TRUSS
START JOB INFORMATION
JOB NAME ROOF TRUSS B-4
JOB NO ?
JOB PART ROOF TRUSS B-4
JOB REF 1
ENGINEER NAME YB
*                                          *********************************
*                                          *                               *
*                                          *                               *
*                                          *         ROOF TRUSS B-4        *
*                                          *                               *
*                                          *                               *
*                                          *********************************
ENGINEER DATE 08/11/12
END JOB INFORMATION
INPUT WIDTH 79
*
UNIT FEET KIP
JOINT COORDINATES
1 0 0 0; 2 3 0 0; 3 11.5 0 0; 4 15.75 0 0; 5 20 0 0; 6 23 0 0;
7 0 -3 0; 8 3 -3 0; 9 11.5 -3 0; 10 20 -3 0; 11 23 -3 0;
*
MEMBER INCIDENCES
1 1 2; 2 2 3; 3 3 4; 4 4 5; 5 5 6;
6 2 7; 7 2 8; 8 2 9; 9 3 9; 10 5 9; 11 5 10;
12 6 10;  13 7 8; 14 8 9; 15 9 10; 16 10 11;
*
*
*
MEMBER TRUSS
6 TO 12
*
***********CONSTANS********
*
UNIT INCHES KIP
DEFINE MATERIAL START
ISOTROPIC STEEL
E 29000
POISSON 0.3
DENSITY 0.000283
ALPHA 6.5e-006
DAMP 0.03
*
ISOTROPIC TIMBER
E 1600
POISSON 0.3
DENSITY 1.85e-005
*ALPHA 5.5e-006
END DEFINE MATERIAL
*
CONSTANTS
MATERIAL TIMBER ALL
*
MEMBER PROPERTY AMERICAN
1 TO 5 PRIS YD 5.5 ZD 1.625
6 8 10 12 PRIS YD 5.5 ZD 0.75
7 9 11 PRIS YD 3.5 ZD 1.625
13 TO 16 PRIS YD 7.5 ZD 1.625
*************************
SUPPORTS
1 7 PINNED
6 11 FIXED BUT FX MY MZ
*
*******************************************************
UNIT FEET POUND
LOAD 1 S/W
SELFWEIGHT Y -1
*
LOAD 2 DR (ROOF DL)
*Truss c/c 2'
```

```
*Truss c/c 2'
*Load 2' x 11 psf = 22 p/ft
MEMBER LOAD
1 TO 5 UNI GY -22
*
LOAD 3 LR (ROOF LL)
*Truss c/c 2'
*Load  2' x 20 psf = 40 p/ft
MEMBER LOAD
1 TO 5 UNI GY -40
*
LOAD 4 WIND UPLIFT
*Truss c/c 2'
*Load  2' x  95 psf = 190 p/ft (Zone 1)
*Load  2' x 132 psf = 264 p/ft (Zone 2)
MEMBER LOAD
4 5 UNI GY 264
1 TO 3 UNI GY 190
*
*******************************************************
LOAD COMB 101 (DL+LR) (EQ. 16-10)
1 1.0 2 1.0 3 1.0
*
LOAD COMB 102 (DL+0.6W) (EQ. 16-12)
1 1.0 2 1.0 4 0.6
*
LOAD COMB 103 (DL+0.45W+0.75LR) (EQ. 16-13)
1 1.0 2 1.0 4 0.45 3 0.75
*
LOAD COMB 104 (0.6DL+0.6W) (EQ. 16-14)
1 0.6 2 0.6 4 0.6
*******************************************************
PERFORM ANALYSIS PRINT STATICS CHECK
LOAD LIST 101 TO 104
PRINT MEMBER FORCES
PRINT SUPPORT REACTION
PRINT JOINT DISPLACEMENTS
UNIT INCHES KIP
PRINT MAXFORCE ENVELOPE
PRINT ALL
FINISH
```

Beam	L/C	Node	Axial Force (kip)	Shear-Y (kip)	Shear-Z (kip)	Torsion (kip-ft)	Moment-Y (kip-ft)	Moment-Z (kip-ft)
1	104	1	1.54	0.01	0.00	0.00	0.00	-0.00
		2	-1.54	-0.31	0.00	0.00	0.00	0.48
2	104	2	-1.69	-0.41	0.00	0.00	0.00	-0.48
		3	1.69	-0.44	0.00	0.00	0.00	0.63
3	104	3	-1.69	-0.47	0.00	0.00	0.00	-0.63
		4	1.69	0.05	0.00	0.00	0.00	-0.48
4	104	4	-1.69	-0.05	0.00	0.00	0.00	0.48
		5	1.69	-0.56	0.00	0.00	0.00	0.60
5	104	5	-1.18	-0.42	0.00	0.00	0.00	-0.60
		6	1.18	-0.02	0.00	0.00	0.00	-0.00
6	104	2	-2.02	0.00	0.00	0.00	0.00	0.00
		7	2.02	0.00	0.00	0.00	0.00	0.00
7	104	2	0.08	0.00	0.00	0.00	0.00	0.00
		8	-0.08	0.00	0.00	0.00	0.00	0.00
8	104	2	1.91	0.00	0.00	0.00	0.00	0.00
		9	-1.91	0.00	0.00	0.00	0.00	0.00
9	104	3	-0.92	0.00	0.00	0.00	0.00	0.00
		9	0.91	0.00	0.00	0.00	0.00	0.00
10	104	5	0.54	0.00	0.00	0.00	0.00	0.00
		9	-0.54	0.00	0.00	0.00	0.00	0.00
11	104	5	-1.15	0.00	0.00	0.00	0.00	0.00
		10	1.15	0.00	0.00	0.00	0.00	0.00
12	104	6	1.66	0.00	0.00	0.00	0.00	0.00
		10	-1.67	0.00	0.00	0.00	0.00	0.00
13	104	7	-0.11	0.05	0.00	0.00	0.00	0.00
		8	0.11	-0.04	0.00	0.00	0.00	0.14
14	104	8	-0.11	-0.04	0.00	0.00	0.00	-0.14
		9	0.11	0.05	0.00	0.00	0.00	-0.26
15	104	9	1.18	0.04	0.00	0.00	0.00	0.26
		10	-1.18	-0.03	0.00	0.00	0.00	0.01
16	104	10	-0.00	-0.00	0.00	0.00	0.00	-0.01
		11	0.00	0.01	0.00	0.00	0.00	0.00

Software licensed to Halcrow	Job No ?	Sheet No 1	Rev
	Part ROOF TRUSS B-4		
Job Title ROOF TRUSS B-4	Ref 1		
	By YB	Date 08/11/12	Chd
Client	File 6 - Truss B - 4.std	Date/Time 14-Aug-2012 07:38	

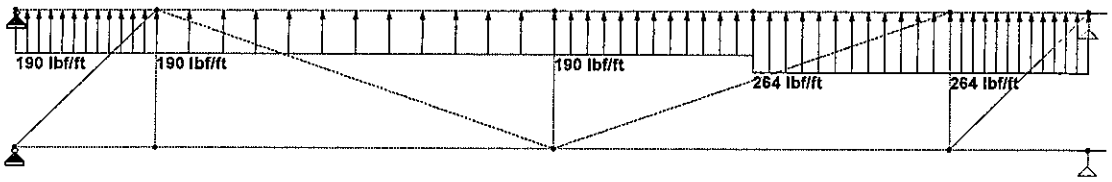

Y
Z X

Load 4

Software licensed to Halcrow	Job No ?	Sheet No 1	Rev
	Part ROOF TRUSS B-4		
Job Title ROOF TRUSS B-4	Ref 1		
	By YB	Date 08/11/12	Chd
Client	File 6 - Truss B - 4.std	Date/Time 14-Aug-2012 07:38	

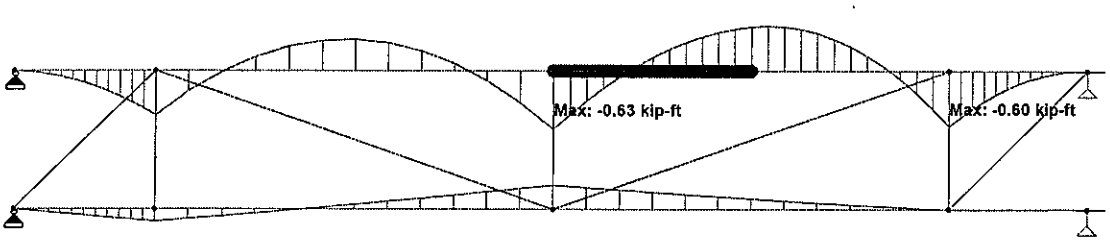

Load 104 : Bending Z
Moment - kip-ft

Software licensed to Halcrow	Job No ?	Sheet No 1	Rev
	Part ROOF TRUSS B-4		
Job Title ROOF TRUSS B-4	Ref 1		
	By YB	Date 08/11/12	Chd
Client	File 6 - Truss B - 4.std	Date/Time 14-Aug-2012 07:38	

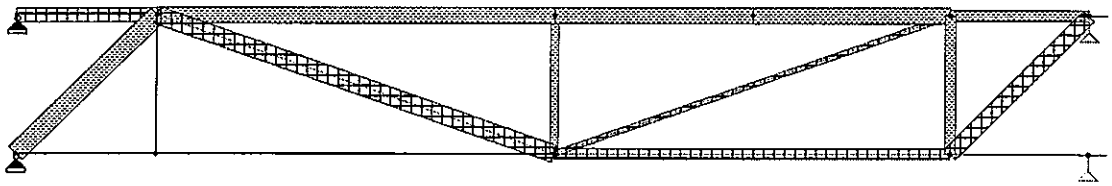

Load 104 : Axial Force

Software licensed to Halcrow	Job No ?	Sheet No 1	Rev
	Part ROOF TRUSS B-4		
Job Title ROOF TRUSS B-4	Ref 1		
	By YB	Date 08/11/12	Chd
Client	File 6 - Truss B - 4.std	Date/Time 14-Aug-2012 07:38	

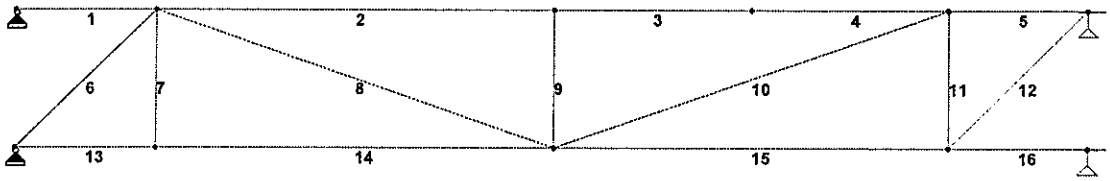

Load 104

Beam	L/C	Node	Axial Force (kip)	Shear-Y (kip)	Shear-Z (kip)	Torsion (kip-ft)	Moment-Y (kip-ft)	Moment-Z (kip-ft)
1	101	1	-1.03	-0.01	0.00	0.00	0.00	-0.00
		2	1.03	0.20	0.00	0.00	0.00	-0.32
2	101	2	1.06	0.27	0.00	0.00	0.00	0.32
		3	-1.06	0.28	0.00	0.00	0.00	-0.37
3	101	3	1.06	0.28	0.00	0.00	0.00	0.37
		4	-1.06	-0.01	0.00	0.00	0.00	0.25
4	101	4	1.06	0.01	0.00	0.00	0.00	-0.25
		5	-1.06	0.26	0.00	0.00	0.00	-0.29
5	101	5	0.66	0.19	0.00	0.00	0.00	0.29
		6	-0.66	-0.00	0.00	0.00	0.00	0.00
6	101	2	1.35	0.00	0.00	0.00	0.00	0.00
		7	-1.35	0.00	0.00	0.00	0.00	0.00
7	101	2	-0.08	0.00	0.00	0.00	0.00	0.00
		8	0.08	0.00	0.00	0.00	0.00	0.00
8	101	2	-1.20	0.00	0.00	0.00	0.00	0.00
		9	1.20	0.00	0.00	0.00	0.00	0.00
9	101	3	0.56	0.00	0.00	0.00	0.00	0.00
		9	-0.56	0.00	0.00	0.00	0.00	0.00
10	101	5	-0.43	0.00	0.00	0.00	0.00	0.00
		9	0.43	0.00	0.00	0.00	0.00	0.00
11	101	5	0.60	0.00	0.00	0.00	0.00	0.00
		10	-0.61	0.00	0.00	0.00	0.00	0.00
12	101	6	-0.93	0.00	0.00	0.00	0.00	0.00
		10	0.93	0.00	0.00	0.00	0.00	0.00
13	101	7	0.07	-0.03	0.00	0.00	0.00	-0.00
		8	-0.07	0.04	0.00	0.00	0.00	-0.10
14	101	8	0.07	0.04	0.00	0.00	0.00	0.10
		9	-0.07	-0.02	0.00	0.00	0.00	0.15
15	101	9	-0.66	-0.01	0.00	0.00	0.00	-0.15
		10	0.66	0.03	0.00	0.00	0.00	-0.04
16	101	10	-0.00	0.02	0.00	0.00	0.00	0.04
		11	0.00	-0.01	0.00	0.00	0.00	0.00

Beam	L/C	Node	Axial Force (kip)	Shear-Y (kip)	Shear-Z (kip)	Torsion (kip-ft)	Moment-Y (kip-ft)	Moment-Z (kip-ft)
1	104	1	1.54	0.01	0.00	0.00	0.00	-0.00
		2	-1.54	-0.31	0.00	0.00	0.00	0.48
2	104	2	-1.69	-0.41	0.00	0.00	0.00	-0.48
		3	1.69	-0.44	0.00	0.00	0.00	0.63
3	104	3	-1.69	-0.47	0.00	0.00	0.00	-0.63
		4	1.69	0.05	0.00	0.00	0.00	-0.48
4	104	4	-1.69	-0.05	0.00	0.00	0.00	0.48
		5	1.69	-0.56	0.00	0.00	0.00	0.60
5	104	5	-1.18	-0.42	0.00	0.00	0.00	-0.60
		6	1.18	-0.02	0.00	0.00	0.00	-0.00
6	104	2	-2.02	0.00	0.00	0.00	0.00	0.00
		7	2.02	0.00	0.00	0.00	0.00	0.00
7	104	2	0.08	0.00	0.00	0.00	0.00	0.00
		8	-0.08	0.00	0.00	0.00	0.00	0.00
8	104	2	1.91	0.00	0.00	0.00	0.00	0.00
		9	-1.91	0.00	0.00	0.00	0.00	0.00
9	104	3	-0.92	0.00	0.00	0.00	0.00	0.00
		9	0.91	0.00	0.00	0.00	0.00	0.00
10	104	5	0.54	0.00	0.00	0.00	0.00	0.00
		9	-0.54	0.00	0.00	0.00	0.00	0.00
11	104	5	-1.15	0.00	0.00	0.00	0.00	0.00
		10	1.15	0.00	0.00	0.00	0.00	0.00
12	104	6	1.66	0.00	0.00	0.00	0.00	0.00
		10	-1.67	0.00	0.00	0.00	0.00	0.00
13	104	7	-0.11	0.05	0.00	0.00	0.00	0.00
		8	0.11	-0.04	0.00	0.00	0.00	0.14
14	104	8	-0.11	-0.04	0.00	0.00	0.00	-0.14
		9	0.11	0.05	0.00	0.00	0.00	-0.26
15	104	9	1.18	0.04	0.00	0.00	0.00	0.26
		10	-1.18	-0.03	0.00	0.00	0.00	0.01
16	104	10	-0.00	-0.00	0.00	0.00	0.00	-0.01
		11	0.00	0.01	0.00	0.00	0.00	0.00

Software licensed to Halcrow	Job No ?	Sheet No 1	Rev
	Part ROOF TRUSS B-4		
Job Title ROOF TRUSS B-4	Ref 1		
	By YB	Date 08/11/12	Chd
Client	File 6 - Truss B - 4.std	Date/Time 14-Aug-2012 08:58	

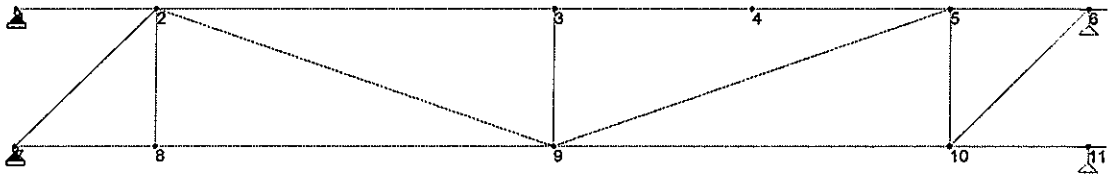

Load 1

JOINT DISPLACEMENT (INCH RADIANS) STRUCTURE TYPE = SPACE

JOINT	LOAD	X-TRANS	Y-TRANS	Z-TRANS	X-ROTAN	Y-ROTAN	Z-ROTAN
1	101	0.00000	0.00000	0.00000	0.00000	0.00000	-0.00015
	102	0.00000	0.00000	0.00000	0.00000	0.00000	0.00021
	103	0.00000	0.00000	0.00000	0.00000	0.00000	0.00008
	104	0.00000	0.00000	0.00000	0.00000	0.00000	0.00024
2	101	0.00258	-0.01735	0.00000	0.00000	0.00000	-0.00150
	102	-0.00345	0.02304	0.00000	0.00000	0.00000	0.00200
	103	-0.00118	0.00784	0.00000	0.00000	0.00000	0.00067
	104	-0.00387	0.02590	0.00000	0.00000	0.00000	0.00223
3	101	-0.00501	-0.08742	0.00000	0.00000	0.00000	-0.00015
	102	0.00734	0.12228	0.00000	0.00000	0.00000	0.00076
	103	0.00279	0.04412	0.00000	0.00000	0.00000	0.00049
	104	0.00817	0.13666	0.00000	0.00000	0.00000	0.00079
4	101	-0.00880	-0.12561	0.00000	0.00000	0.00000	0.00046
	102	0.01274	0.20734	0.00000	0.00000	0.00000	-0.00043
	103	0.00477	0.08613	0.00000	0.00000	0.00000	-0.00008
	104	0.01419	0.22720	0.00000	0.00000	0.00000	-0.00051
5	101	-0.01259	-0.02978	0.00000	0.00000	0.00000	0.00172
	102	0.01814	0.04639	0.00000	0.00000	0.00000	-0.00294
	103	0.00676	0.01857	0.00000	0.00000	0.00000	-0.00125
	104	0.02022	0.05128	0.00000	0.00000	0.00000	-0.00321
6	101	-0.01425	0.00000	0.00000	0.00000	0.00000	0.00055
	102	0.02083	0.00000	0.00000	0.00000	0.00000	-0.00082
	103	0.00787	0.00000	0.00000	0.00000	0.00000	-0.00032
	104	0.02318	0.00000	0.00000	0.00000	0.00000	-0.00092
7	101	0.00000	0.00000	0.00000	0.00000	0.00000	-0.00042
	102	0.00000	0.00000	0.00000	0.00000	0.00000	0.00056
	103	0.00000	0.00000	0.00000	0.00000	0.00000	0.00019
	104	0.00000	0.00000	0.00000	0.00000	0.00000	0.00063
8	101	-0.00013	-0.01767	0.00000	0.00000	0.00000	-0.00065
	102	0.00018	0.02329	0.00000	0.00000	0.00000	0.00084
	103	0.00007	0.00789	0.00000	0.00000	0.00000	0.00028
	104	0.00020	0.02622	0.00000	0.00000	0.00000	0.00095
9	101	-0.00049	-0.08520	0.00000	0.00000	0.00000	-0.00011
	102	0.00070	0.11900	0.00000	0.00000	0.00000	0.00022
	103	0.00026	0.04290	0.00000	0.00000	0.00000	0.00010
	104	0.00078	0.13304	0.00000	0.00000	0.00000	0.00024
10	101	0.00296	-0.02739	0.00000	0.00000	0.00000	0.00082
	102	-0.00489	0.04220	0.00000	0.00000	0.00000	-0.00118
	103	-0.00206	0.01676	0.00000	0.00000	0.00000	-0.00044
	104	-0.00538	0.04672	0.00000	0.00000	0.00000	-0.00132
11	101	0.00296	0.00000	0.00000	0.00000	0.00000	0.00074
	102	-0.00489	0.00000	0.00000	0.00000	0.00000	-0.00117
	103	-0.00206	0.00000	0.00000	0.00000	0.00000	-0.00047
	104	-0.00538	0.00000	0.00000	0.00000	0.00000	-0.00129

Software licensed to Halcrow	Job No ?	Sheet No 1	Rev
	Part ROOF TRUSS B-4		
Job Title ROOF TRUSS B-4	Ref 1		
	By YB	Date 08/11/12	Chd
Client	File 6 - Truss B - 4.std	Date/Time 14-Aug-2012 08:58	

Support Reactions

B-4

Node	L/C	Force-X (kip)	Force-Y (kip)	Force-Z (kip)	Moment-X (kip*ft)	Moment-Y (kip*ft)	Moment-Z (kip*ft)
7	101	1.03	0.93	0.00	0.00	0.00	0.00
6	101	0.00	0.66	0.00	0.00	0.00	0.00
1	104	1.54	0.01	0.00	0.00	0.00	0.00
11	104	0.00	0.01	0.00	0.00	0.00	0.00
11	101	0.00	-0.01	0.00	0.00	0.00	0.00
1	101	-1.03	-0.01	0.00	0.00	0.00	0.00
6	104	0.00	-1.19	0.00	0.00	0.00	0.00
7	104	-1.54	-1.88	0.00	0.00	0.00	0.00

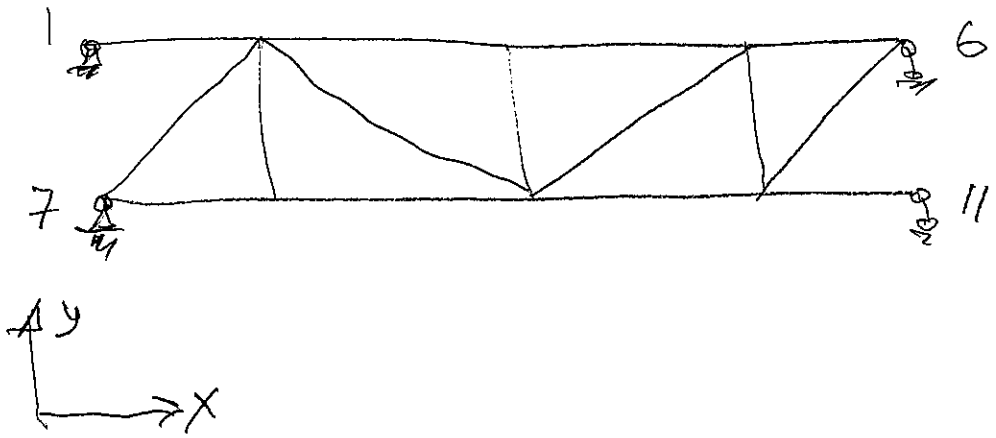

ROOF TRUSSES

Member Checking

Truss AU-1

Truss member checking

Halcrow
A CH2M HILL COMPANY

PROJECT	Glynn Archer School, Florida	SHEET NO		OF	
SUBJECT	Roof Truss Evaluation	JOB NO			
	Summary of Truss Member checking	MADE BY	YB	DATE	16-Aug-12
		CHKD BY		DATE	

Truss AU-1

Gravity Loads

Member #	Cross section			Governing Loads	Conclusion
	b (in)	h (in)	A (sqi)		
1	1.50	7.50	11.25	Bending and Compression	ng
4	1.50	3.50	5.25	Tension	ok
5	1.50	3.50	5.25	Compression	ng

Uplift Loads

Member #	Cross section			Governing Loads	Conclusion
	b (in)	h (in)	A (sqi)		
1	1.50	7.50	11.25	Bending and Tension	ng
4	1.50	3.50	5.25	Compression	ng
5	1.50	3.50	5.25	Tension	ok

Truss AU-1

Gravity Loads

Software licensed to Halcrow	Job No 1	Sheet No 1	Rev
	Part ROOF TRUSS AU-1		
Job Title ROOF TRUSS AU-1	Ref 1		
	By YB	Date 08/11/12	Chd
Client	File 1 - Truss AU - 1.std	Date/Time 14-Aug-2012 10:51	

AU-1

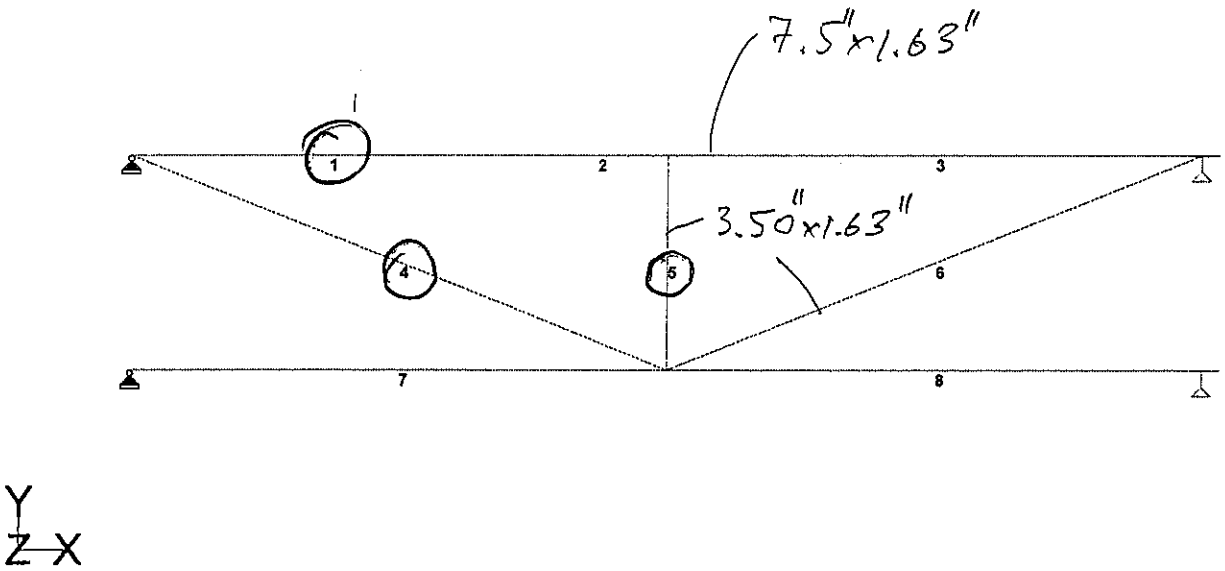

Load 101

Software licensed to Halcrow	Job No 1	Sheet No 1	Rev
	Part ROOF TRUSS AU-1		
Job Title ROOF TRUSS AU-1	Ref 1		
	By YB	Date 08/11/12	Chd
Client	File 1 - Truss AU - 1.std	Date/Time 14-Aug-2012 10:51	

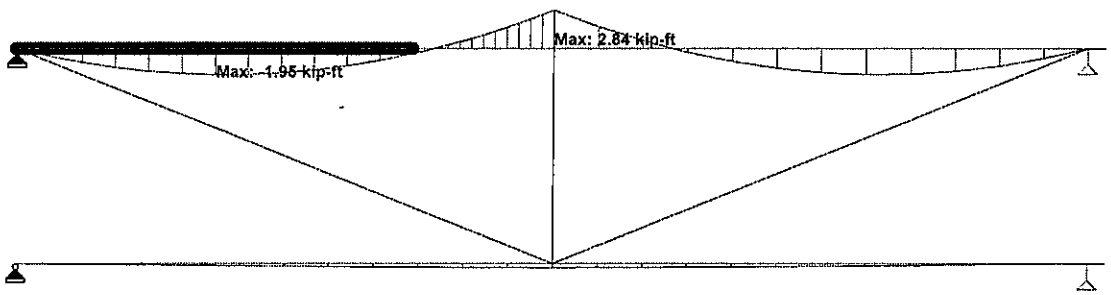

LC 101

Load 101 : Bending Z
Moment - kip-ft

Software licensed to Halcrow	Job No 1	Sheet No 1	Rev
	Part ROOF TRUSS AU-1		
Job Title ROOF TRUSS AU-1	Ref 1		
	By YB	Date 08/11/12	Chd
Client	File 1 - Truss AU - 1.std	Date/Time 14-Aug-2012 10:51	

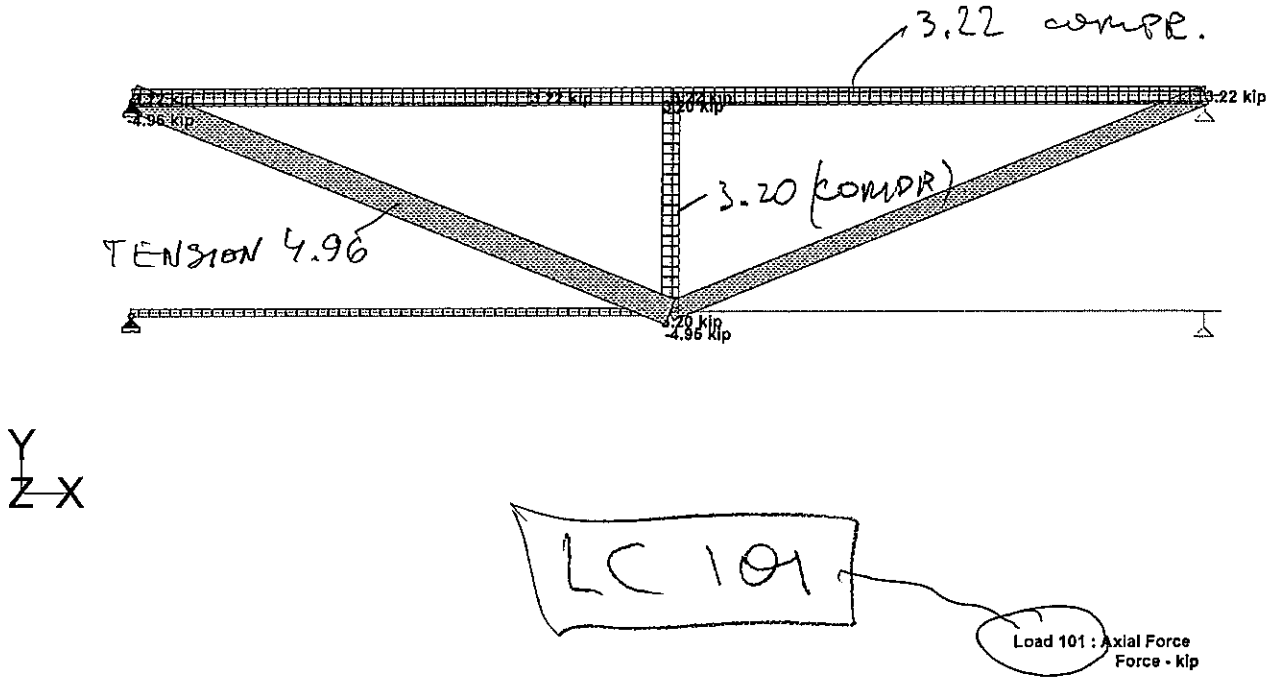

Halcrow
A CH2M HILL COMPANY

PROJECT	Glynn Archer School, Florida			SHEET NO ____	OF ____
SUBJECT	Roof Truss Structural assessment	Gravity Loads		JOB NO	
	Bending and Compression member	1	Truss AU-1	MADE	YB 15-Aug-12
				CHKD	

Bending and Compression member 1

All design procedures will be done according to
*The National Design Specification for Wood Construction (**NDS**)* 2005, (parag. 3.9.2)

Species: Southern Pine, grade No 2
Nominal Sizes: D1 = 8 in
D2 = 2 in
Dressed Sizes: d1 = 7.50 in
b = d2 = 1.50 in
Dressed Sizes: Table 1B, p.14 Supplement
Classification: Visually Graded

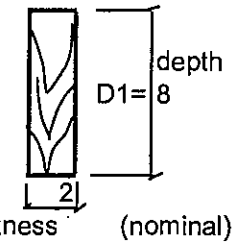

Cross section area **A =** 7.50 × 1.50 = **11.3** sqi

Dimension lumber –
NDS 4.1.3.2

refers to lumber from 2" to 4" (nominal) thick,
and 2" (nominal) or more width

Design values:

"Reference Design Value", Tables 4B, NDS **Supplement**

Fb =	1200	psi	bending
Ft =	650	psi	tension parallel to grain
Fv =	175	psi	shear parallel to grain
Fcp =	565	psi	compression perpendicular to grain
Fc =	1550	psi	compression parallel to grain
E =	1600000	psi	modulus of elasticity
Emin =	580000	psi	modulus of elasticity (min)
Emin' =	580000	psi	

Adjustment Factors

(for normal building environmental, see Manual, p. 13)

C_D =	1.60	load duration factor (wind) see Table 2.3.2 p.9
C_F =	1.00	size factor (for Southern Pine already included in tabulated values, see p. 37)
Cr =	1.00	repetitive member factor, p. 28
C_L =		beam stability factor (calculated below)
C_P =		column stability factor (calculated below)

Beam Stability Factor, C_L (see 3.3.3, p.13)

Member unsupported length Lu = 20 ft = 24 in d1 = 7.50 in

Lu/d1= 24 / 7.50 = 3.2

If **Lu/d1 ≥ 7** Use the following Eq.:

Member effective length: Le = 1.63 × Lu + 3 × d1

Le = 1.63 × 24 + 3 × 7.50 = 61.6 in

If **Lu/d1 < 7** Use the following Eq.:

Le = 2.06 × Lu = 2.06 × 24 = 49 in

Use: Le = 49 in

Slenderness ratio: $R_B = \sqrt{Le \times d1 / b^2} = \sqrt{62 \times 7.50 / 2.25} = 14.3$

R_B = 14.3 < 50 **ok!**

$(R_B)^2$ = 205

Fb* – reference bending design value multiplied by all adjustment factors, except C_L

Fb*= Fb × C_D × C_F × Cr =

= 1200 × 1.60 × 1.00 × 1.00 = **1920** psi

F_{bE} = 1.20 × Emin' / R_B^2 = 1.20 × 580000 / 205 = 3389

a = F_{bE} / Fb* = 3389 / 1920 = 1.76

b = (1 + a) / 1.9 = (1 + 1.76) / 1.9 = 1.46

$C_L = b - \sqrt{b^2 - a / 0.95} =$

$C_L = 1.46 - \sqrt{2.12 - 1.76 / 0.95} =$ **0.95**

Fb' = Fb* × C_L = 1920 × 0.95 = **1815** psi

Column stability factor Cp

(see 3.7 - p.19)

F*c — reference compression design value multiplied by all adjustment factors, except **Cp**

$F^*c = Fc \times C_D \times C_F$

$F^*c = 1550 \times 1.60 \times 1.00 = \mathbf{2480}$ psi

Unbraced length of the compressed member L = 24 in (defined above)

(pinned - pinned) Ke = 1.00 effective length coefficient, See Appendix G, p.156

$Le = Ke \times L = 1.00 \times 24 = 24$ in

Re - the slenderness ratio, for columns with rectangular cross section shall be taken as the larger of the ratios Lx/d1 or Lz/d2

$Re = Le / d2 = 24 / 1.50 = 16.0 < 50$ **ok!**

$\boxed{F^*c = \mathbf{2480}}$ psi (see calculations above)

$$F_{cE} = \frac{K \times Emin'}{(Re)^2} = \frac{0.822 \times 580000}{16.0 \times 16.0} = 1862$$

$$k1 = F_{cE} / F^*c = 1862 / 2480 = 0.75$$

c = 0.80 — for sawn lumber

$$k2 = \frac{1 + k1}{2c} = \frac{1 + 0.75}{2 \times 0.80} = 1.09$$

$$k3 = k2^2 = 1.09 \times 1.09 = 1.20$$

$$Cp = k2 - \sqrt{k3 - k1 / c}$$

$$\mathbf{Cp} = 1.09 - \sqrt{1.20 - 0.75 / 0.80} = \mathbf{0.586}$$

Corrected value **Fc'** = $2480 \times 0.586 = \mathbf{1452}$ psi

Check Stresses

a) Bending (bending load applied to narrow face of member)

Bending Moment in member $M = 1.95$ k-ft $=$ 23400 p - in (see STAAD)

Modulus of inertia $I = \frac{d2 \times d1^3}{12} = \frac{1.50 \times 7.50 \times 7.50 \times 7.50}{12} =$ **53** in^4

Section modulus $S = \frac{d2 \times d1^2}{6} = \frac{1.50 \times 7.50 \times 7.50}{6} =$ **14.1** in^3

Actual bending Stress $f_{b1} = M / S =$ 23400 / 14.1 $=$ 1664 psi

$f_{b1} < F_{bE} = 1.20 \times Emin' / (R_B)^2$

$F_{bE} = 1.20 \times 580000 / 205 = 3389$ psi

Use: $f_{b1} = 1664$ psi

b) Compression

Compression in member $P = 3.22$ k $=$ 3220 lb (see STAAD)

Actual compression Stress $fc = P / A =$ 3220 / 11.3 $=$ **286** psi

Le1 = Le = 24 in d2 = 1.5 in

Le1 / d2 = 24 / 1.5 = 16.0 (Le1 / d2)^2 = 256

$f_c < F_{cE1} = 0.82 \times Emin' / (Le1 / d2)^2$

$F_{cE1} = 0.82 \times 580000 / 256.0 = 1862$ psi

Use: **fc** = 286 psi

Member subjected to a combination of bending and compression shall be proportioned that:

$$\boxed{\left(\frac{fc}{Fc'}\right)^2 + \frac{f_{b1}}{F_{b1}' \left(1 - (fc / F_{cE1})\right)} < 1}$$ (see 3.9.2)

fc / Fc' = 286 / 1452 = 0.20 0.20 ^2 = 0.04

$f_{b1} = 1664$ psi

$F_{b1}' = Fb' = 1815$ psi

$(1 - fc / F_{cE1}) = 1 - 286 / 1862 = 0.85$

$$\frac{f_{b1}}{F_{b1}' \left(1 - fc / F_{cE1}\right)} = \frac{1664}{1815 \times 0.85} = 1.08$$

0.04 + 1.08 = 1.12 > 1.00

ng!

Halcrow
A CH2M HILL COMPANY

PROJECT	Glynn Archer School, Florida		SHEET NO	____	OF ____
			JOB NO		
SUBJECT	Roof Truss Structural assessment	Gravity Loads	MADE	YB	15-Aug-12
	Tension member 4	Truss AU-1	CHKD		

Tension member 4

All design procedures will be done according to
*The National Design Specification for Wood Construction (**NDS**)* 2005

Species: Southern yellow Pine, grade 2
Nominal Sizes: B = 2 in = 0.17 ft
D = 4 in = 0.33 ft
Dressed Sizes: b = 1.50 in
d = 3.50 in
Dressed Sizes: Table 1B, p.14 Supplement
Classification: Visually Graded

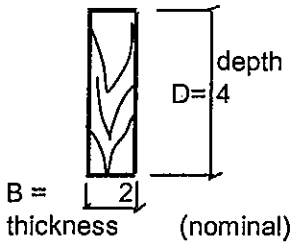

Cross section Area A = 1.50 × 3.50 = **5.3** sqi

Dimension lumber –
NDS 4.1.3.2

refers to lumber from 2" to 4" (nominal) thick,
and 2" (nominal) or more width

Design values:

"Reference Design Value", Tables 4B, NDS **Supplement**

Ft = 825 psi tension parallel to grain

Adjustment Factors

(for normal building environmental, see Manual, p. 13)

C_D = 1.60 load duration factor (wind) see Table 2.3.2 p.9

C_F = 1.00 size factor (for Southern Pine already included in tabulated values, see p. 37)

$Ft' = Ft \times C_D \times C_F =$

$= 825 \times 1.60 \times 1.00 = 1320$ psi

The allowable tension force:

$T = A \times Ft' = 5.3 \times 1320 = 6930$ lbf = 6.93 kips

Tension force in considered member T = 4.96 k (see STAAD)

T = 6.93 k > 4.96 k **ok!**

Compression member 5

All design procedures will be done according to
*The National Design Specification for Wood Construction (**NDS**)* 2005

Species: Southern Pine, grade 2
Nominal Sizes: D1 = 4.0 in
D2 = 2.0 in
Dressed Sizes: d1 = 3.50 in
d2 = 1.50 in
Dressed Sizes: Table 1B, p.14 Supplement, Section Properties
Classification: Visually Graded

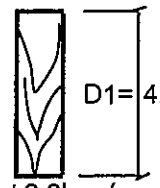

D2 = 2.0 (nominal)

Cross section Area A = 3.50 × 1.50 = **5.25** In^2

Dimension lumber – refers to lumber from 2" to 4" (nominal) thick,
NDS 4.1.3.2 and 2" (nominal) or more width

Design values: "Reference Design Value", Table 4B, NDS **Supplement**

Fc = 1650 psi compression parallel to grain

E = 1600000 psi modulus of elasticity

Emin = 580000 psi modulus of elasticity (min)

Adjustment Factors

(for normal building environmental, see Manual, p. 13)

C_D = 1.60 load duration factor (wind) see Table 2.3.2 p.9

C_F = 1.00 size factor, for Southern Pine already incorporated I tabulated values (see p.37)

C_p = column stability factor (calculated below)

F*c - tabulated compression design value multiplied by all adjustment factors, except **Cp**

F*c = Fb × C_D × C_F =

= 1650 × 1.60 × 1.00 = **2640** psi

Emin' = Emin = 580000 psi

Calculation of column stability factor Cp (see 3.7 - p.19)

Unbraced length of the compressed member L = 48 in = 4.00 ft

(pinned - pinned) Ke = 1.00 effective length coefficient, See Appendix G, p.156

Le = Ke × L = 1.00 x 48 = 48 in

Re - the slenderness ratio, for columns with rectangular cross section shall be taken as the larger of the ratios Lx/d1 or Lz/d2

Re = Le / d2 = 48 / 1.50 = 32 < 50 **ok!**

F*c = **2640** psi (see calculations above)

$$F_{cE} = \frac{K \times Emin'}{(Re)^2} = \frac{0.822 \times 580000}{32 \times 32} = 466$$

k1 = F_{cE} / F*c = 466 / 2640 = 0.18

c = 0.80 - for sawn lumber

$$k2 = \frac{1 + k1}{2c} = \frac{1 + 0.18}{2 \times 0.80} = 0.74$$

k3 =k2 ^ 2 = 0.74 × 0.74 = 0.54

$$Cp = k2 - \sqrt{k3 - k1 / c}$$

$$\mathbf{Cp} = 0.74 - \sqrt{0.54 - 0.18 / 0.80} = \mathbf{0.169}$$

Corrected value Fc' = 2640 × 0.169 = **447** psi

Allowable compression force P = A × Fc' = 5.25 × 447 = 2349 p

Compression in considered member P = 3.20 k (see STAAD)

P = 2.35 k < 3.20 k **ng!**

Truss AU-1

Uplift Loads

Software licensed to Halcrow	Job No 1	Sheet No 1	Rev
	Part ROOF TRUSS AU-1		
Job Title ROOF TRUSS AU-1	Ref 1		
	By YB	Date 08/11/12	Chd
Client	File 1 - Truss AU - 1.std	Date/Time 14-Aug-2012 10:51	

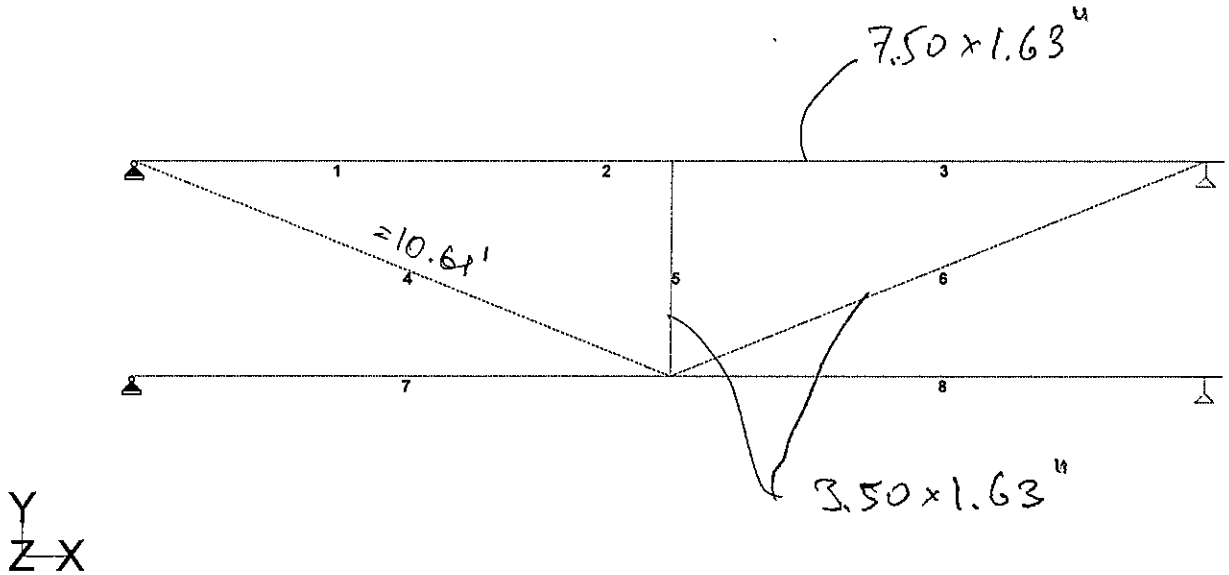

Load 101

Software licensed to Halcrow	Job No 1	Sheet No 1	Rev
	Part ROOF TRUSS AU-1		
Job Title ROOF TRUSS AU-1	Ref 1		
	By YB	Date 08/11/12	Chd
Client	File 1 - Truss AU - 1.std	Date/Time 14-Aug-2012 10:51	

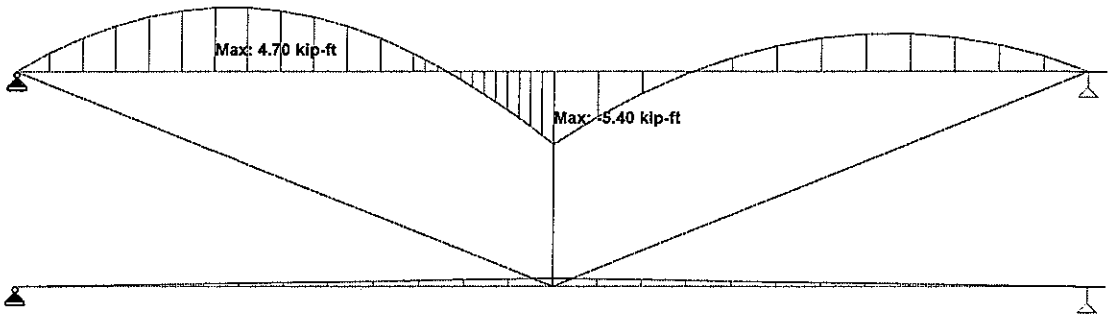

Load 104 : Bending Z
Moment - kip-ft

Software licensed to Halcrow	Job No 1	Sheet No 1	Rev
	Part ROOF TRUSS AU-1		
Job Title ROOF TRUSS AU-1	Ref 1		
	By YB	Date 08/11/12	Chd
Client	File 1 - Truss AU - 1.std	Date/Time 14-Aug-2012 10:51	

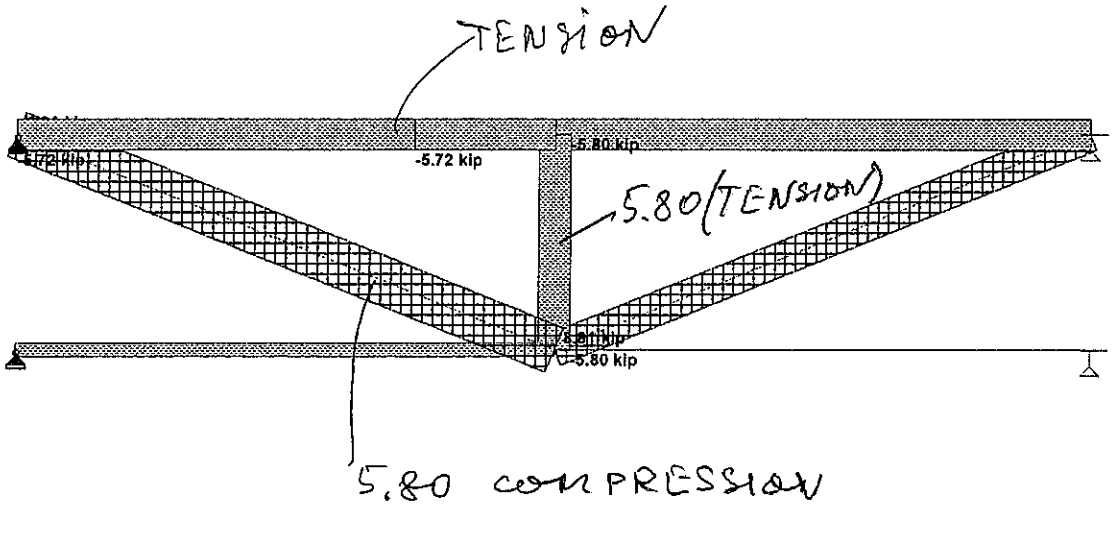

Load 104 : Axial Force
Force - kip

Halcrow
A CH2M HILL COMPANY

PROJECT	Glynn Archer School, Florida			SHEET NO ____	OF ____
SUBJECT	Roof Truss Structural assessment	Uplift		JOB NO	
	Bending member	1	Truss AU-1	MADE	YB 15-Aug-12
				CHKD	

Bending member 1

All design procedures will be done according to
*The National Design Specification for Wood Construction (**NDS**)* 2005

Species: Southern Pine, grade No 2
Nominal Sizes: B = 2 in
D = 8 in
Dressed Sizes: b = 1.50 in
d = 7.50 in
Dressed Sizes: Table 1B, p.14 Supplement
Classification: Visually Graded

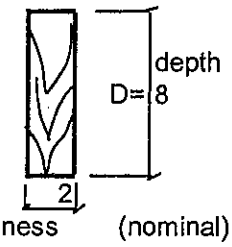

Dimension lumber –
NDS 4.1.3.2

refers to lumber from 2" to 4" (nominal) thick,
and 2" (nominal) or more width

Design values: "Reference Design Value", Tables 4B, NDS **Supplement**

Fb =	1200	psi	bending
Fv =	175	psi	shear parallel to grain
Fcp =	565	psi	compression perpendicular to grain
E =	1600000	psi	modulus of elasticity
Emin =	580000	psi	modulus of elasticity (min)
Emin' =	580000	psi	

Adjustment Factors

(for normal building environmental, see Manual, p. 13)

C_D = 1.60 load duration factor (wind) see Table 2.3.2 p.9

C_F = 1.00 size factor (for Southern Pine already included, p. 37)

Cr = 1.00 repetitive member factor, p. 28

C_L = beam stability factor (calculated below)

Beam Stability Factor, C_L (see 3.3.3, p.13)

Member unsupported length Lu = 10.0 ft = 120 in d = 7.50 in

Lu/d = 120 / 7.50 = 16

If **Lu / d ≥ 7** use the following Eq.:

Member effective length: Le = 1.63 × Lu + 3 × d =

Le = 1.63 × 120 + 3 × 7.50 = 218 in

If **Lu / d < 7** use the following Eq.:

Le = 2.06 × Lu = 2.06 × 120 = 247

Use: Le = 218.1 in

Slenderness ratio: $R_B = \sqrt{Le \times d / b^2} = \sqrt{218 \times 7.50 / 2.25} = 27$

$R_B = 27 < 50$ **ok!**

$C_L =$ 1.00 beam stability factor, (intermediate value)

Fb*= Fb × C_D × C_F × Cr × C_L =

= 1200 × 1.60 × 1.00 × 1.00 × 1.00 = **1920** psi

F_{bE} = 1.2 × Emin' / R_B^2 = 1.2 × 580000 / 727 = 957

a = F_{bE} / Fb* = 957 / 1920 = 0.5

b = (1 + a) / 1.9 = (1 + 0.5)/ 1.9 = 0.79

C_L = b − √(b^2 − a / 0.95) =

C_L = 0.79 − √(0.62 − 0.5 / 0.95) = 0.48

Fb' = Fb* × C_L = 1920 × 0.48 = **916** psi

Check Stresses

Bending Moment in member M = 4.70 k-ft = 56400 p - in (see STAAD)

Modulus of inertia $I = \frac{b \times d^3}{12} = \frac{1.5 \times 7.50 \times 7.50 \times 7.50}{12} =$ **53** in^4

Section modulus $S = \frac{b \times d^2}{6} = \frac{1.5 \times 7.50 \times 7.50}{6} =$ **14.1** in^3

Actual bending Stress fb = M / S = 56400 / 14.1 = 4011 psi

fb = **4011** psi > Fb' = **916** psi **ng!**

Tension in member not considered

Halcrow
A CH2M HILL COMPANY

PROJECT	Glynn Archer School, Florida			SHEET NO ____	OF ____
SUBJECT	Roof Truss Structural assessment		Uplift	JOB NO	
	Compression member	4	Truss AU-1	MADE	YB 15-Aug-12
				CHKD	

Compression member 4

All design procedures will be done according to
*The National Design Specification for Wood Construction (**NDS**)* 2005

Species: Southern Pine, grade 2
Nominal Sizes: D1 = 4.0 in
D2 = 2.0 in
Dressed Sizes: d1 = 3.50 in
d2 = 1.50 in
Dressed Sizes: Table 1B, p.14 Supplement, Section Properties
Classification: Visually Graded

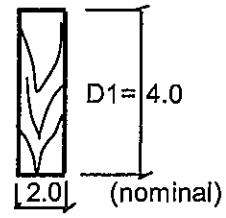

Cross section Area A = 3.50 × 1.50 = **5.25** In^2

Dimension lumber – refers to lumber from 2" to 4" (nominal) thick,
NDS 4.1.3.2 and 2" (nominal) or more width

Design values: "Reference Design Value", Table 4B, NDS **Supplement**

Fc = 1650 psi compression parallel to grain

E = 1600000 psi modulus of elasticity

Emin = 580000 psi modulus of elasticity (min)

Adjustment Factors

(for normal building environmental, see Manual, p. 13)

C_D = 1.60 load duration factor (wind) see Table 2.3.2 p.9

C_F = 1.00 size factor, for Southern Pine already incorporated in tabulated values (see p. 37)

C_p = column stability factor (calculated below)

F*c - tabulated compression design value multiplied by all adjustment factors, except **Cp**

F*c = Fb × C_D × C_F =

= 1650 × 1.60 × 1.00 = **2640** psi

Emin' = Emin = 580000 psi

Calculation of column stability factor Cp (see 3.7 - p.19)

Unbraced length of the compressed member L = 127 in = 10.6 ft

(pinned - pinned) Ke = 1.00 effective length coefficient, See Appendix G, p.156

Le = Ke × L = 1.00 x 127 = 127 in

Re - the slenderness ratio, for columns with rectangular cross section shall be taken as the larger of the ratios Lx/d1 or Lz/d2

Re = Le / d2 = 127.2 / 1.50 = 85 > 50 **ng!**

F*c = **2640** psi (see calculations above)

$$F_{cE} = \frac{K \times Emin'}{(Re)^2} = \frac{0.822 \times 580000}{85 \times 85} = 66$$

k1 = F_{cE} / F*c = 66 / 2640 = 0.03

c = 0.80 – for sawn lumber

$$k2 = \frac{1 + k1}{2c} = \frac{1 + 0.03}{2 \times 0.80} = 0.64$$

k3 =k2 ^ 2 = 0.64 × 0.64 = 0.41

$$Cp = k2 - \sqrt{k3 - k1 / c}$$

$$\mathbf{Cp} = 0.64 - \sqrt{0.41 - 0.03 / 0.80} = \mathbf{0.025}$$

Corrected value Fc' = 2640 × 0.025 = **66** psi

Allowable compression force P = A × Fc' = 5.25 × 66 = 346 p

Compression in considered member P = 5.80 k (see STAAD)

P = 0.35 k < 5.80 k **ng!**

Halcrow
A CH2M HILL COMPANY

PROJECT	Glynn Archer School, Florida			SHEET NO ____	OF ____
				JOB NO	
SUBJECT	Roof Truss Structural assessment		Uplift	MADE	YB 15-Aug-12
	Tension member	5	Truss AU-1	CHKD	

Tension member 5

All design procedures will be done according to
*The National Design Specification for Wood Construction (**NDS**)* 2005

Species: Southern yellow Pine, grade 2
Nominal Sizes: B = 2 in = 0.17 ft
D = 4 in = 0.33 ft
Dressed Sizes: b = 1.50 in
d = 3.50 in
Dressed Sizes: Table 1B, p.14 Supplement
Classification: Visually Graded

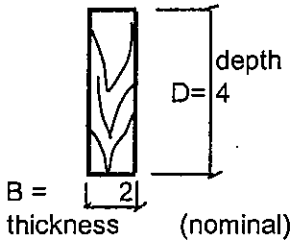

Cross section Area A = 1.50 × 3.50 = **5.3** sqi

Dimension lumber –
NDS 4.1.3.2

refers to lumber from 2" to 4" (nominal) thick,
and 2" (nominal) or more width

Design values:

"Reference Design Value", Tables 4B, NDS **Supplement**

Ft = 825 psi tension parallel to grain

Adjustment Factors

(for normal building environmental, see Manual, p. 13)

C_D = 1.60 load duration factor (wind) see Table 2.3.2 p.9

C_F = 1.00 size factor (for Southern Pine already included in tabulated values, see p. 37)

Ft' = Ft × C_D × C_F =
= 825 × 1.60 × 1.00 = 1320 psi

The allowable tension force:

T = A × Ft' = 5.3 × 1320 = 6930 lbf = 6.93 kips

Tension force in considered member T = 5.80 k (see STAAD)

T = 6.93 k > 5.80 k **ok!**

Truss A - 1

Truss member checking

Halcrow
A CH2M HILL COMPANY

PROJECT	Glynn Archer School, Florida	SHEET NO		OF	
		JOB NO			
SUBJECT	Roof Truss Evaluation	MADE BY	YB	DATE	16-Aug-12
	Summary of Truss Member checking	CHKD BY		DATE	

Truss A - 1

Gravity Loads

Member #	Cross section b (in)	h (in)	A (sqi)	Governing Loads	Conclusion
1	1.50	5.50	8.25	Bending and Compression	ok
4	1.50	5.50	8.25	Tension	ok
5	1.50	5.50	8.25	Compression	ok

Uplift Loads

Member #	Cross section b (in)	h (in)	A (sqi)	Governing Loads	Conclusion
1	1.50	5.50	8.25	Bending and Tension	ng
4	1.50	5.50	8.25	Compression	ng
5	1.50	5.50	8.25	Tension	ok

Software licensed to Halcrow	Job No ?	Sheet No 1	Rev
	Part ROOF TRUSS A-1		
Job Title ROOF TRUSS A-1	Ref 1		
	By BY	Date 08/11/12	Chd
Client	File 2 - Truss A - 1.std	Date/Time 13-Aug-2012 15:46	

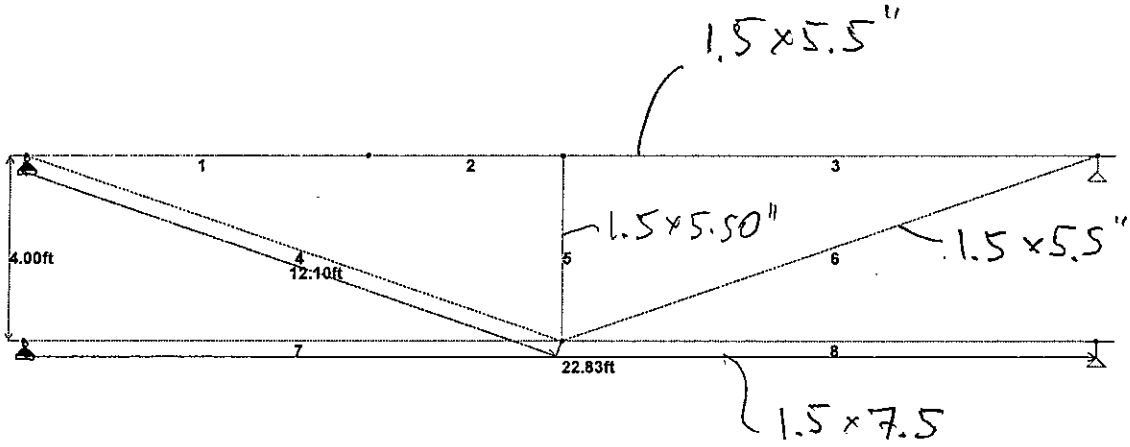

Load 1

Truss A - 1

Gravity Loads

Software licensed to Halcrow	Job No ?	Sheet No 1	Rev
	Part ROOF TRUSS A-1		
Job Title ROOF TRUSS A-1	Ref 1		
	By BY	Date 08/11/12	Chd
Client	File 2 - Truss A - 1.std	Date/Time 13-Aug-2012 15:46	

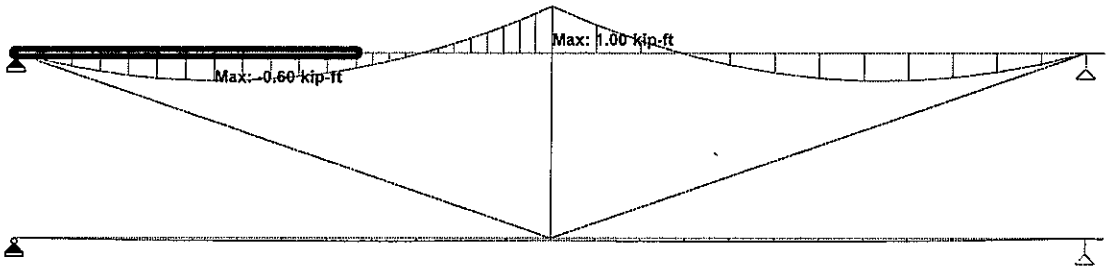

Load 101 : Bending Z
Moment - kip-ft

Software licensed to Halcrow	Job No ?	Sheet No 1	Rev
	Part ROOF TRUSS A-1		
Job Title ROOF TRUSS A-1	Ref 1		
	By BY	Date 08/11/12	Chd
Client	File 2 - Truss A - 1.std	Date/Time 13-Aug-2012 15:46	

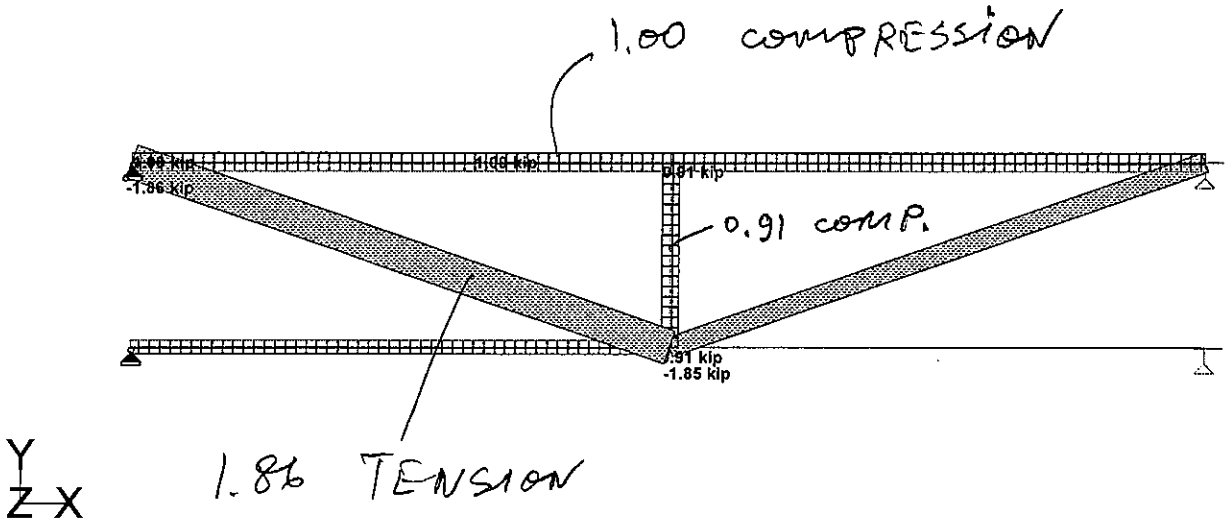

Load 101 : Axial Force
Force - kip

Bending and Compression member 1

All design procedures will be done according to
*The National Design Specification for Wood Construction (**NDS**)* 2005, (parag. 3.9.2)

Species: Southern Pine, grade No 2
Nominal Sizes: D1 = 6 in
D2 = 2 in
Dressed Sizes: d1 = 5.50 in
b = d2 = 1.50 in
Dressed Sizes: Table 1B, p.14 Supplement
Classification: Visually Graded

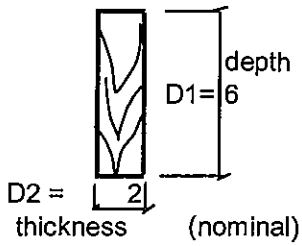

Cross section area **A =** 5.50 × 1.50 = **8.25** sqi

Dimension lumber –
NDS 4.1.3.2

refers to lumber from 2" to 4" (nominal) thick,
and 2" (nominal) or more width

Design values:

"Reference Design Value", Tables 4B, NDS **Supplement**

Fb =	1250	psi	bending
Ft =	725	psi	tension parallel to grain
Fv =	175	psi	shear parallel to grain
Fcp =	565	psi	compression perpendicular to grain
Fc =	1600	psi	compression parallel to grain
E =	1600000	psi	modulus of elasticity
Emin =	580000	psi	modulus of elasticity (min)

Emin' = 580000 psi

Adjustment Factors

(for normal building environmental, see Manual, p. 13)

C_D =	1.60	load duration factor (wind) see Table 2.3.2 p.9
C_F =	1.00	size factor (for Southern Pine already included in tabulated values, see p. 37)
Cr =	1.00	repetitive member factor, p. 28
C_L =		beam stability factor (calculated below)
C_P =		column stability factor (calculated below)

Beam Stability Factor, C_L (see 3.3.3, p.13)

Member unsupported length Lu = 2.0 ft = 24 in d1 = 5.50 in

Lu/d1= 24 / 5.50 = 4.4

If **Lu/d1 ≥ 7** Use the following Eq.:

Member effective length: Le = 1.63 × Lu + 3 × d1

Le = 1.63 × 24 + 3 × 5.50 = 55.6 in

If **Lu/d1 < 7** Use the following Eq.:

Le = 2.06 × Lu = 2.06 × 24 = 49 in

Use: Le = 49 in

Slenderness ratio: $R_B = \sqrt{Le \times d1 / b^2} = \sqrt{56 \times 5.50 / 2.25} = 11.7$

R_B = 11.7 < 50 **ok!**

$(R_B)^2$ = 136

Fb* — reference bending design value multiplied by all adjustment factors, except C_L

Fb*= Fb × C_D × C_F × Cr =

= 1250 × 1.60 × 1.00 × 1.00 = **2000** psi

F_{bE} = 1.20 × Emin' / R_B^2 = 1.20 × 580000 / 136 = 5119

a = F_{bE} / Fb* = 5119 / 2000 = 2.56

b = (1 + a) / 1.9 = (1 + 2.56) / 1.9 = 1.87

C_L = b — $\sqrt{b^2 - a / 0.95}$ =

C_L = 1.87 — $\sqrt{3.51 - 2.56 / 0.95}$ = **0.97**

Fb' = Fb* × C_L = 2000 × 0.97 = **1941** psi

Column stability factor Cp

(see 3.7 - p.19)

F*c — reference compression design value multiplied by all adjustment factors, except **Cp**

$F^*c = Fc \times C_D \times C_F$

$F^*c = 1600 \times 1.60 \times 1.00 = \mathbf{2560}$ psi

Unbraced length of the compressed member L = 24 in (defined above)

(pinned - pinned) Ke = 1.00 effective length coefficient, See Appendix G, p.156

$Le = Ke \times L = 1.00 \times 24 = 24$ in

Re - the slenderness ratio, for columns with rectangular cross section shall be taken as the larger of the ratios Lx/d1 or Lz/d2

$Re = Le / d2 = 24 / 1.50 = 16.0 < 50$ **ok!**

F*c = **2560** psi (see calculations above)

$$F_{cE} = \frac{K \times Emin'}{(Re)^2} = \frac{0.822 \times 580000}{16.0 \times 16.0} = 1862$$

$$k1 = F_{cE} / F^*c = 1862 / 2560 = 0.73$$

c = 0.80 — for sawn lumber

$$k2 = \frac{1 + k1}{2c} = \frac{1 + 0.73}{2 \times 0.80} = 1.08$$

$$k3 = k2^2 = 1.08 \times 1.08 = 1.17$$

$$Cp = k2 - \sqrt{k3 - k1 / c}$$

$$\mathbf{Cp} = 1.08 - \sqrt{1.17 - 0.73 / 0.80} = \mathbf{0.573}$$

Corrected value **Fc' =** 2560 × 0.573 = **1468** psi

Check Stresses

a) Bending (bending load applied to narrow face of member)

Bending Moment in member $M = 0.60$ k-ft $=$ 7200 p - in (see STAAD)

Modulus of inertia $I = \frac{d2 \times d1^3}{12} = \frac{1.50 \times 5.50 \times 5.50 \times 5.50}{12} =$ **21** in^4

Section modulus $S = \frac{d2 \times d1^2}{6} = \frac{1.50 \times 5.50 \times 5.50}{6} =$ **7.6** in^3

Actual bending Stress $f_{b1} = M / S = 7200 / 7.6 =$ 952 psi

$f_{b1} < F_{bE} = 1.20 \times Emin' / (R_B)^2$

$F_{bE} = 1.20 \times 580000 / 136 =$ 5119 psi

Use: $f_{b1} =$ 952 psi

b) Compression

Compression in member $P = 1.00$ k $=$ 1000 lb (see STAAD)

Actual compression Stress $fc = P / A = 1000 / 8.3 =$ **121** psi

Le1 = Le = 24 in d2 = 1.5 in

Le1 / d2 = 24 / 1.5 = 16.0 (Le1 / d2)^2 = 256

$f_c < F_{cE1} = 0.82 \times Emin' / (Le1 / d2)^2$

$F_{cE1} = 0.82 \times 580000 / 256.0 =$ 1862 psi

Use: **fc** = 121 psi

Member subjected to a combination of bending and compression shall be proportioned that:

$$\boxed{\left(\frac{fc}{Fc'}\right)^2 + \frac{f_{b1}}{F_{b1}' \left(1 - (fc / F_{cE1})\right)} < 1}$$ (see 3.9.2)

fc / Fc' = 121 / 1468 = 0.08 0.08 ^2 = 0.01

$f_{b1} =$ 952 psi

$F_{b1}' = Fb' =$ 1941 psi

$(1 - fc / F_{cE1}) = 1 - 121 / 1862 =$ 0.93

$$\frac{f_{b1}}{F_{b1}' \left(1 - fc / F_{cE1}\right)} = \frac{952}{1941 \times 0.93} = 0.52$$

0.01 + 0.52 = 0.53 < 1.00 **ok!**

Halcrow
A CH2M HILL COMPANY

PROJECT	Glynn Archer School, Florida		SHEET NO	____	OF ____
SUBJECT	Roof Truss Structural assessment	Gravity Loads	JOB NO		
	Tension member	4 / Truss A -1	MADE	YB	15-Aug-12
			CHKD		

Tension member 4

All design procedures will be done according to
*The National Design Specification for Wood Construction (**NDS**)* 2005

Species: Southern yellow Pine, grade 2
Nominal Sizes: B = 2 in
D = 6 in
Dressed Sizes: b = 1.50 in
d = 5.50 in
Dressed Sizes: Table 1B, p.14 Supplement
Classification: Visually Graded

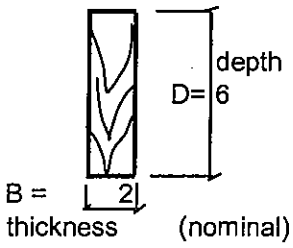

Cross section Area A = 1.50 × 5.50 = **8.3** sqi

Dimension lumber –
NDS 4.1.3.2

refers to lumber from 2" to 4" (nominal) thick,
and 2" (nominal) or more width

Design values:

"Reference Design Value", Tables 4B, NDS **Supplement**

Ft = 725 psi tension parallel to grain

Adjustment Factors

(for normal building environmental, see Manual, p. 13)

C_D = 1.60 load duration factor (wind) see Table 2.3.2 p.9

C_F = 1.00 size factor (for Southern Pine already included in tabulated values, see p. 37)

Ft' = Ft × C_D × C_F =
= 725 × 1.60 × 1.00 = 1160 psi

The allowable tension force:

T = A × Ft' = 8.3 × 1160 = 9570 lbf = 9.57 kips

Tension force in considered member T = 1.86 k (see STAAD)

T = 9.57 k > 1.86 k **ok!**

Truss A - 1

Uplift Loads

Software licensed to Halcrow	Job No ?	Sheet No 1	Rev
	Part ROOF TRUSS A-1		
Job Title ROOF TRUSS A-1	Ref 1		
	By BY	Date 08/11/12	Chd
Client	File 2 - Truss A - 1.std	Date/Time 16-Aug-2012 11:47	

UPLIFT

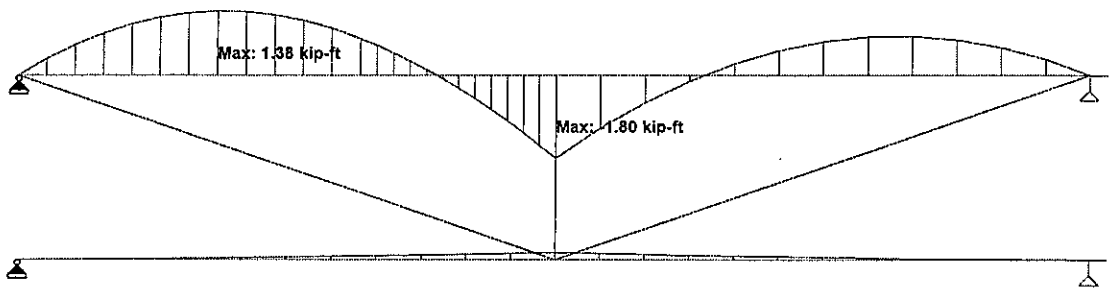

Load 104 : Bending Z
Moment - kip-ft

Software licensed to Halcrow	Job No ?	Sheet No 1	Rev
	Part ROOF TRUSS A-1		
Job Title ROOF TRUSS A-1	Ref 1		
	By BY	Date 08/11/12	Chd
Client	File 2 - Truss A - 1.std	Date/Time 13-Aug-2012 15:46	

UPLIFT

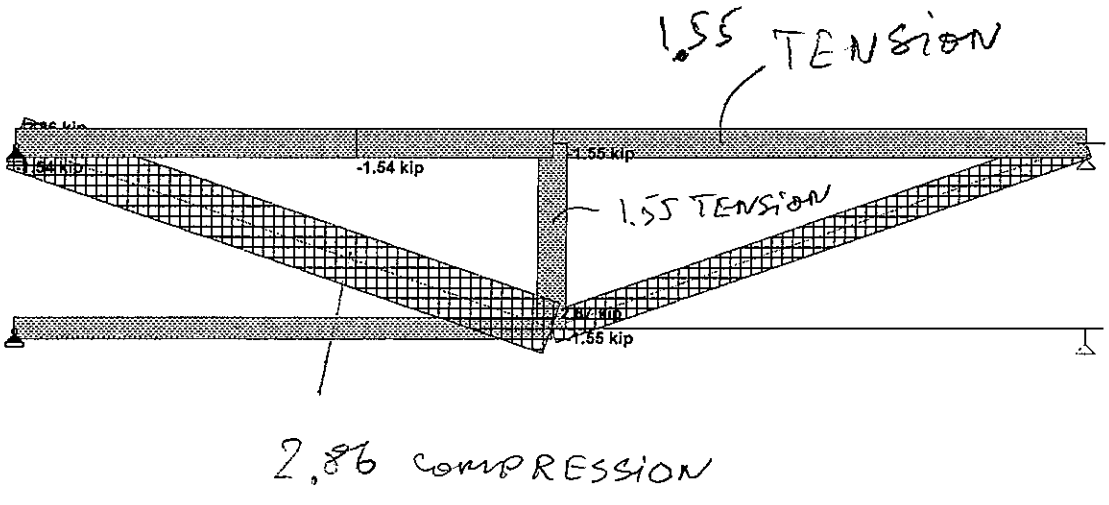

Load 104 : Axial Force
Force - kip

Bending and Tension Member 1

All design procedures will be done according to
*The National Design Specification for Wood Construction (**NDS**)* 2005

Species: Southern Pine, grade No 2
Nominal Sizes: B = 2 in
D = 6 in
Dressed Sizes: b = 1.50 in
d = 5.50 in
Dressed Sizes: Table 1B, p.14 Supplement
Classification: Visually Graded

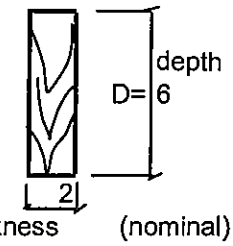

Cross section Area A = 1.50 × 5.50 = **8.25** sqi

Dimension lumber – refers to lumber from 2" to 4" (nominal) thick,
NDS 4.1.3.2 and 2" (nominal) or more width

Design values:			"Reference Design Value", Tables 4B, NDS **Supplement**
Fb =	1250	psi	bending
Ft =	725	psi	tension parallel to grain
Fv =	175	psi	shear parallel to grain
Fcp =	565	psi	compression perpendicular to grain
Fc =	1600	psi	compression parallel to grain
E =	1600000	psi	modulus of elasticity
Emin =	580000	psi	modulus of elasticity (min)
Emin' =	580000	psi	

Adjustment Factors

(for normal building environmental, see Manual, p. 13)

C_D = 1.60 load duration factor (wind) see Table 2.3.2 p.9

C_F = 1.00 size factor (for Southern Pine already included in tabulated values, p. 37)

Cr = 1.00 repetitive member factor, p. 28

C_L = 1.00 beam stability factor (not considered for this case, see 3.9.1)

Fb*= Fb × C_D × C_F × Cr × C_L =

= 1250 × 1.60 × 1.00 × 1.00 × 1.00 = **2000** psi

Ft'= Ft × C_D × C_F =

= 725 × 1.60 × 1.00 = **1160** psi

Halcrow
A CH2M HILL COMPANY

PROJECT	Glynn Archer School, Florida	SHEET NO ____	OF ____
SUBJECT	Roof Truss Structural assessment — Uplift	JOB NO	
	Compression member 4 — Truss A - 1	MADE	YB 16-Aug-12
		CHKD	

Compression member 4

All design procedures will be done according to
*The National Design Specification for Wood Construction (**NDS**)* 2005

Species: Southern Pine, grade 2
Nominal Sizes: D1 = 6.0 in
D2 = 2.0 in
Dressed Sizes: d1 = 5.50 in
d2 = 1.50 in
Dressed Sizes: Table 1B, p.14 Supplement, Section Properties
Classification: Visually Graded

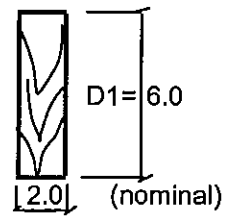

Cross section Area A = 5.50 × 1.50 = **8.25** In^2

Dimension lumber – refers to lumber from 2" to 4" (nominal) thick,
NDS 4.1.3.2 and 2" (nominal) or more width

Design values: "Reference Design Value", Table 4B, NDS **Supplement**

Fc = 1600 psi compression parallel to grain

E = 1600000 psi modulus of elasticity

Emin = 580000 psi modulus of elasticity (min)

Adjustment Factors

(for normal building environmental, see Manual, p. 13)

C_D = 1.60 load duration factor (wind) see Table 2.3.2 p.9

C_F = 1.00 size factor, for Southern Pine already incorporated ! tabulated values (see p. 37)

C_p = column stability factor (calculated below)

F*c - tabulated compression design value multiplied by all adjustment factors, except **Cp**

F*c = Fb × C_D × C_F =

= 1600 × 1.60 × 1.00 = **2560** psi

Emin' = Emin = 580000 psi

Calculation of column stability factor Cp (see 3.7 - p.19)

Unbraced length of the compressed member L = 145 in = 12.1 ft

(pinned - pinned) Ke = 1.00 effective length coefficient, See Appendix G, p.156

Le = Ke × L = 1.00 x 145 = 145 in

Re - the slenderness ratio, for columns with rectangular cross section shall be taken as the larger of the ratios Lx/d1 or Lz/d2

Re = Le / d2 = 145.2 / 1.50 = 97 > 50 ng!

F*c = 2560 psi (see calculations above)

$$F_{cE} = \frac{K \times Emin'}{(Re)^2} = \frac{0.822 \times 580000}{97 \times 97} = 51$$

k1 = F_{cE} / F*c = 51 / 2560 = 0.02

c = 0.80 – for sawn lumber

$$k2 = \frac{1 + k1}{2c} = \frac{1 + 0.02}{2 \times 0.80} = 0.64$$

k3 =k2 ^ 2 = 0.64 × 0.64 = 0.41

$$Cp = k2 - \sqrt{k3 - k1 / c}$$

$$\mathbf{Cp} = 0.64 - \sqrt{0.41 - 0.02 / 0.80} = \mathbf{0.020}$$

Corrected value Fc' = 2560 × 0.020 = **51** psi

Allowable compression force P = A × Fc' = 8.25 × 51 = 418 p

Compression in considered member P = 2.86 k (see STAAD)

P = 0.42 k < 2.86 k ng!

Tension member 5

All design procedures will be done according to
*The National Design Specification for Wood Construction (**NDS**)* 2005

Species: Southern yellow Pine, grade 2
Nominal Sizes: B = 2 in
D = 6 in
Dressed Sizes: b = 1.50 in
d = 5.50 in
Dressed Sizes: Table 1B, p.14 Supplement
Classification: Visually Graded

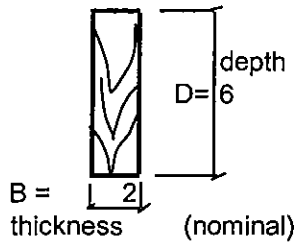

Cross section Area A = 1.50 × 5.50 = **8.3** sqi

Dimension lumber –
NDS 4.1.3.2

refers to lumber from 2" to 4" (nominal) thick,
and 2" (nominal) or more width

Design values:

"Reference Design Value", Tables 4B, NDS **Supplement**

Ft = 725 psi tension parallel to grain

Adjustment Factors

(for normal building environmental, see Manual, p. 13)

C_D = 1.60 load duration factor (wind) see Table 2.3.2 p.9

C_F = 1.00 size factor (for Southern Pine already included in tabulated values, see p. 37)

$Ft' = Ft \times C_D \times C_F =$

$= 725 \times 1.60 \times 1.00 = 1160$ psi

The allowable tension force:

$T = A \times Ft' = 8.3 \times 1160 = 9570$ lbf = 9.57 kips

Tension force in considered member T = 1.55 k (see STAAD)

T = 9.57 k > 1.55 k **ok!**

Truss B - 1

Truss member checking

Halcrow
A CH2M HILL COMPANY

PROJECT	Glynn Archer School, Florida	SHEET NO		OF	
		JOB NO			
SUBJECT	Roof Truss Evaluation	MADE BY	YB	DATE	16-Aug-12
	Summary of Truss Member checking	CHKD BY		DATE	

Truss B - 1

Gravity Loads

Member #	Cross section			Governing Loads	Conclusion
	b (in)	h (in)	A (sqi)		
1	1.50	3.50	5.25	Bending	ok
5	0.75	5.50	4.13	Compression	ng
8	1.50	7.50	11.25	Tension	ok

Uplift Loads

Member #	Cross section			Governing Loads	Conclusion
	b (in)	h (in)	A (sqi)		
1	1.50	3.50	5.25	Bending and Compression	ok
5	0.75	5.50	4.13	Tension	ok
8	1.50	7.50	11.25	Compression	ng

Software licensed to Halcrow	Job No ?	Sheet No 1	Rev
	Part ROOF TRUSS B-1		
Job Title ROOF TRUSS B-1	Ref 1		
	By BY	Date 08/11/12	Chd
Client	File 3 - Truss B - 1.std	Date/Time 13-Aug-2012 15:46	

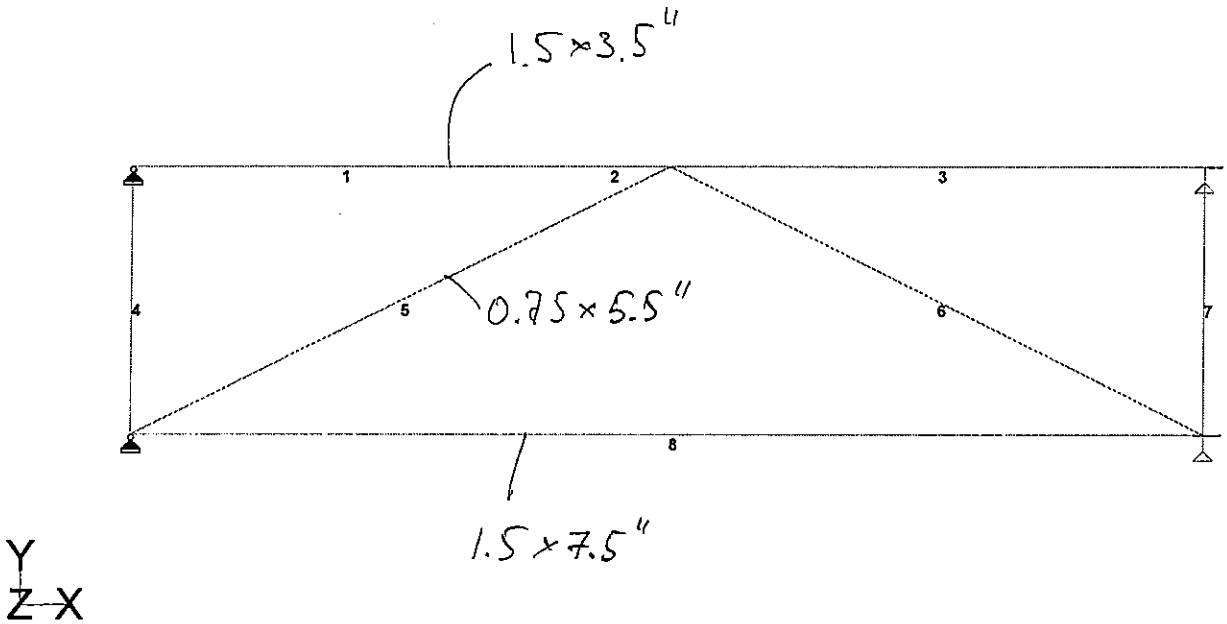

Load 1

Software licensed to Halcrow	Job No ?	Sheet No 1	Rev
	Part ROOF TRUSS B-1		
Job Title ROOF TRUSS B-1	Ref 1		
	By BY	Date 08/11/12	Chd
Client	File 3 - Truss B - 1.std	Date/Time 13-Aug-2012 15:46	

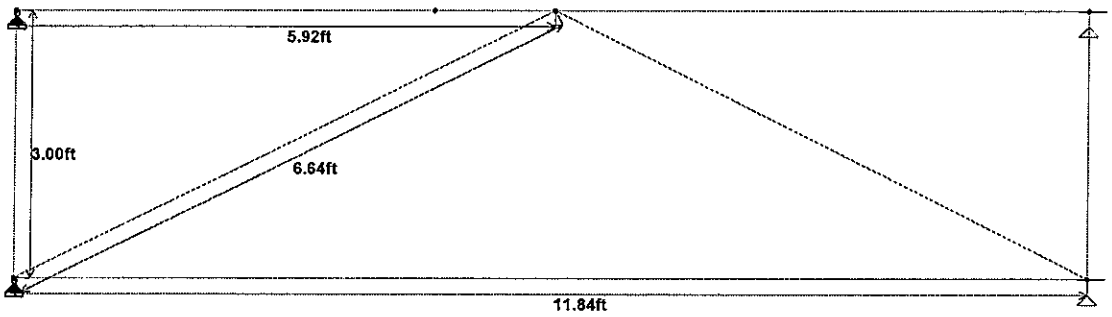

Load 1

Truss B - 1

Gravity Loads

Software licensed to Halcrow	Job No ?	Sheet No 1	Rev
	Part ROOF TRUSS B-1		
Job Title ROOF TRUSS B-1	Ref 1		
	By BY	Date 08/11/12	Chd
Client	File 3 - Truss B - 1.std	Date/Time 13-Aug-2012 15:46	

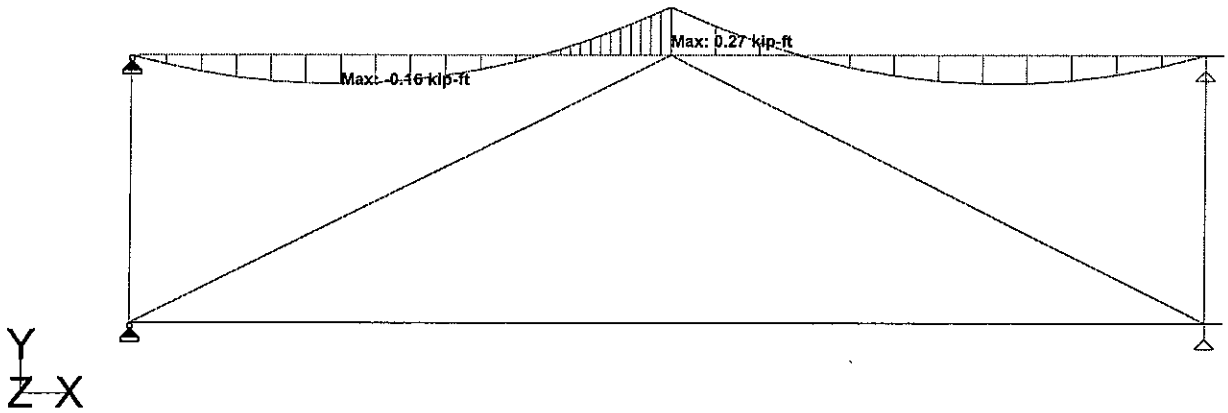

Load 101 : Bending Z
Moment - kip-ft

Software licensed to Halcrow	Job No ?	Sheet No 1	Rev
	Part ROOF TRUSS B-1		
Job Title ROOF TRUSS B-1	Ref 1		
	By BY	Date 08/11/12	Chd
Client	File 3 - Truss B - 1.std	Date/Time 13-Aug-2012 15:46	

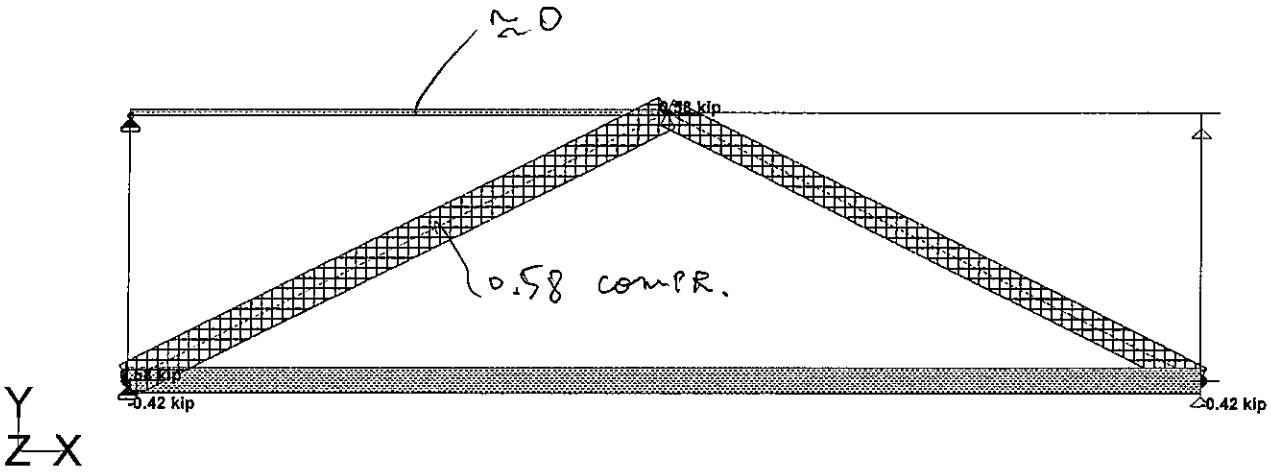

Load 101 : Axial Force
Force - kip

Halcrow
A CH2M HILL COMPANY

PROJECT	Glynn Archer School, Florida			SHEET NO ____	OF ____
SUBJECT	Roof Truss Structural assessment	Gravity		JOB NO	
	Bending, Laterally Supported Member 1	Truss B - 11		MADE	YB 16-Aug-12
				CHKD	

Bending, Laterally supported member 1

All design procedures will be done according to
*The National Design Specification for Wood Construction (**NDS**)* 2005

Species: Southern Pine, grade No 2
Nominal Sizes: B = 2 in
D = 4 in
Dressed Sizes: b = 1.50 in
d = 3.50 in
Dressed Sizes: Table 1B, p.14 Supplement
Classification: Visually Graded

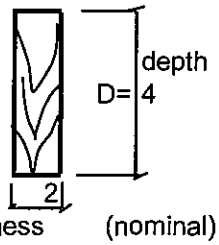

Dimension lumber – refers to lumber from 2" to 4" (nominal) thick,
NDS 4.1.3.2 and 2" (nominal) or more width

Design values: "Reference Design Value", Tables 4B, NDS **Supplement**

Fb =	1500	psi	bending
Fv =	175	psi	shear parallel to grain
Fcp =	565	psi	compression perpendicular to grain
E =	1600000	psi	modulus of elasticity
Emin =	580000	psi	modulus of elasticity (min)

Adjustment Factors

(for normal building environmental, see Manual, p. 13)

C_D = 1.60 load duration factor (wind) see Table 2.3.2 p.9

C_F = 1.00 size factor (for Southern Pine already included, p. 37)

Cr = 1.00 repetitive member factor, p. 28

C_L = 1.00 beam stability factor (laterally supported bending member)

Fb' = Fb × C_D × C_F × Cr × C_L =

= 1500 × 1.60 × 1.00 × 1.00 × 1.00 = **2400** psi

Check Stresses

Bending Moment in member M = 0.16 k-ft = 1920 p - in (see STAAD)

Modulus of inertia $I = \frac{b \times d^3}{12} = \frac{1.5 \times 3.50 \times 3.50 \times 3.50}{12} =$ **5** in^4

Section modulus $S = \frac{b \times d^2}{6} = \frac{1.5 \times 3.50 \times 3.50}{6} =$ **3.1** in^3

Stress fb = M / S = 1920 / 3.1 = 627 psi

fb = 627 psi < Fb' = 2400 psi **ok!**

Compression member 5

All design procedures will be done according to
*The National Design Specification for Wood Construction (**NDS**)* 2005

Species: Southern Pine, grade 2
Nominal Sizes: D1 = 6.0 in
D2 = 1.0 in
Dressed Sizes: d1 = 5.50 in
d2 = 0.75 in
Dressed Sizes: Table 1B, p.14 Supplement, Section Properties
Classification: Visually Graded

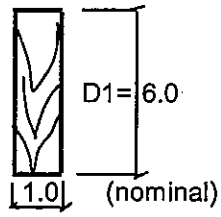

Cross section Area A = 5.50 × 0.75 = **4.13** In^2

Dimension lumber – refers to lumber from 2" to 4" (nominal) thick,
NDS 4.1.3.2 and 2" (nominal) or more width

Design values: "Reference Design Value", Table 4B, NDS **Supplement**

Fc = 1600 psi compression parallel to grain

E = 1600000 psi modulus of elasticity

Emin = 580000 psi modulus of elasticity (min)

Adjustment Factors

(for normal building environmental, see Manual, p. 13)

C_D = 1.60 load duration factor (wind) see Table 2.3.2 p.9

C_F = 1.00 size factor, for Southern Pine already incorporated / tabulated values (see p. 37)

C_p = column stability factor (calculated below)

F*c - tabulated compression design value multiplied by all adjustment factors, except **Cp**

F*c = Fb × C_D × C_F =

= 1600 × 1.60 × 1.00 = **2560** psi

Emin' = Emin = 580000 psi

Calculation of column stability factor Cp (see 3.7 - p.19)

Unbraced length of the compressed member L = 80 in = 6.64 ft

(pinned - pinned) Ke = 1.00 effective length coefficient, See Appendix G, p.156

Le = Ke × L = 1.00 x 80 = 80 in

Re - the slenderness ratio, for columns with rectangular cross section shall be taken as the larger of the ratios Lx/d1 or Lz/d2

Re = Le / d2 = 79.68 / 0.75 = 106 > 50 **ngl**

F*c = **2560** psi (see calculations above)

$$F_{cE} = \frac{K \times Emin'}{(Re)^2} = \frac{0.822 \times 580000}{106 \times 106} = 42$$

k1 = F_{cE} / F*c = 42 / 2560 = 0.02

c = 0.80 – for sawn lumber

$$k2 = \frac{1 + k1}{2c} = \frac{1 + 0.02}{2 \times 0.80} = 0.64$$

k3 =k2 ^ 2 = 0.64 × 0.64 = 0.40

$$Cp = k2 - \sqrt{k3 - k1 / c}$$

$$\mathbf{Cp} = 0.64 - \sqrt{0.40 - 0.02 / 0.80} = \mathbf{0.016}$$

Corrected value Fc' = 2560 × 0.016 = **42** psi

Allowable compression force P = A × Fc' = 4.13 × 42 = 174 p

Compression in considered member P = 0.58 k (see STAAD)

P = 0.17 k > 0.58 k **ngl**

Halcrow
A CH2M HILL COMPANY

PROJECT	Glynn Archer School, Florida		SHEET NO	____	OF ____
SUBJECT	Roof Truss Structural assessment	Gravity Loads	JOB NO		
	Tension member	8	MADE	YB	16-Aug-12
		Truss B -1	CHKD		

Tension member 8

All design procedures will be done according to
*The National Design Specification for Wood Construction (**NDS**)* 2005

Species: Southern yellow Pine, grade 2
Nominal Sizes: B = 2 in
D = 8 in
Dressed Sizes: b = 1.50 in
d = 7.50 in
Dressed Sizes: Table 1B, p.14 Supplement
Classification: Visually Graded

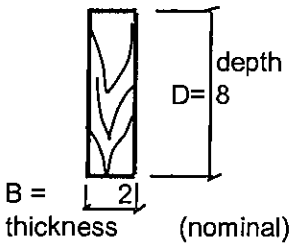

Cross section Area A = 1.50 × 7.50 = **11.3** sqi

Dimension lumber –
NDS 4.1.3.2

refers to lumber from 2" to 4" (nominal) thick,
and 2" (nominal) or more width

Design values:

"Reference Design Value", Tables 4B, NDS **Supplement**

Ft = 650 psi tension parallel to grain

Adjustment Factors

(for normal building environmental, see Manual, p. 13)

C_D = 1.60 load duration factor (wind) see Table 2.3.2 p.9

C_F = 1.00 size factor (for Southern Pine already included in tabulated values, see p. 37)

$Ft' = Ft \times C_D \times C_F =$

$= 650 \times 1.60 \times 1.00 = 1040$ psi

The allowable tension force:

$T = A \times Ft' = 11.3 \times 1040 = 11700$ lbf = 11.7 kips

Tension force in considered member T = 0.42 k (see STAAD)

T = 11.70 k > 0.42 k **ok!**

Truss B - 1

Uplift Loads

Software licensed to Halcrow	Job No ?	Sheet No 1	Rev
	Part ROOF TRUSS B-1		
Job Title ROOF TRUSS B-1	Ref 1		
	By BY	Date 08/11/12	Chd
Client	File 3 - Truss B - 1.std	Date/Time 13-Aug-2012 15:46	

UPLIFT

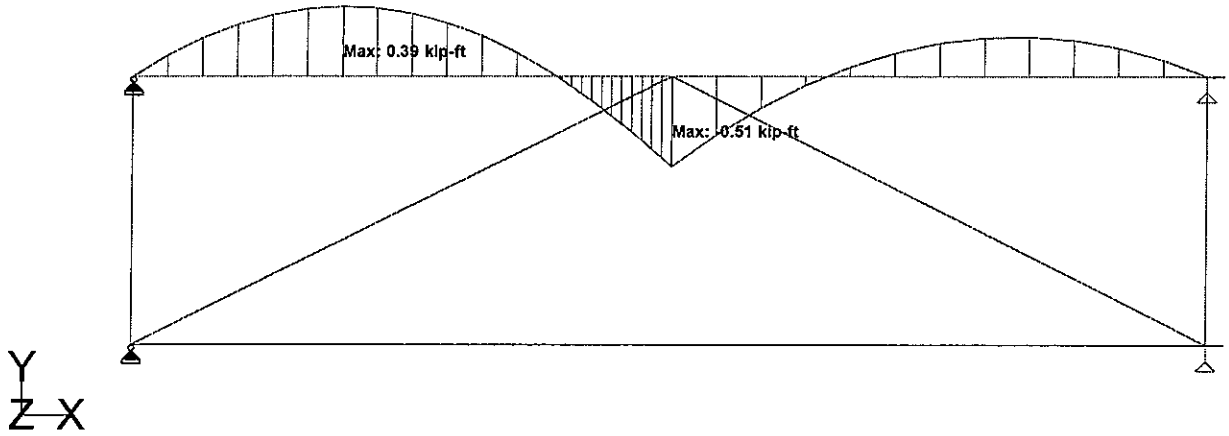

Load 104 : Bending Z
Moment - kip-ft

Software licensed to Halcrow	Job No ?	Sheet No 1	Rev
	Part ROOF TRUSS B-1		
Job Title ROOF TRUSS B-1	Ref 1		
	By BY	Date 08/11/12	Chd
Client	File 3 - Truss B - 1.std	Date/Time 13-Aug-2012 15:46	

UPLIFT

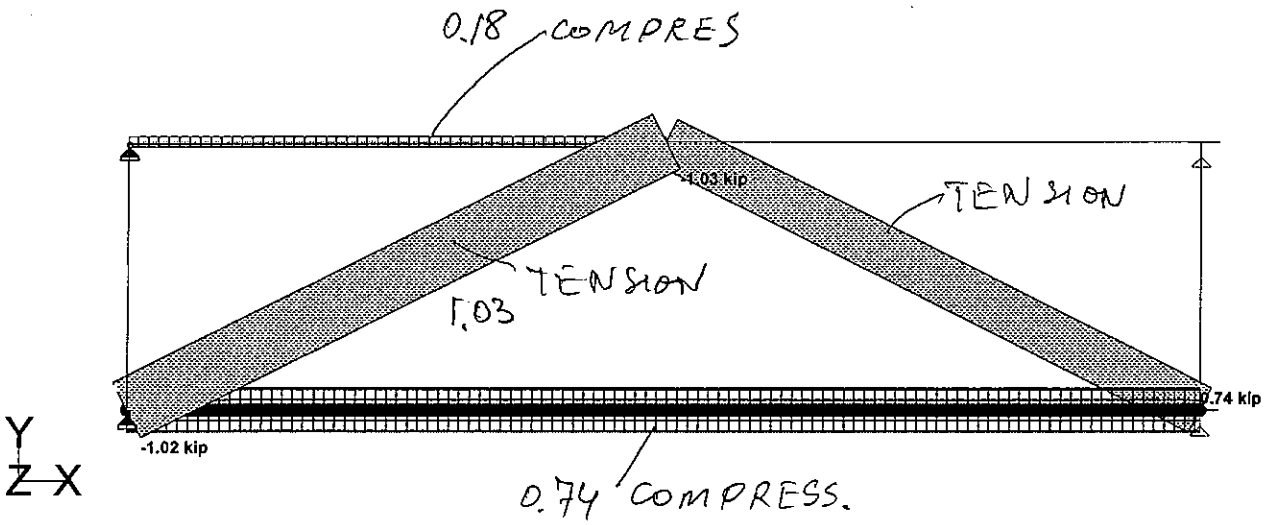

Load 104 : Axial Force
Force - kip

Bending and Compression member 1

All design procedures will be done according to
*The National Design Specification for Wood Construction (**NDS**)* 2005, (parag. 3.9.2)

Species: Southern Pine, grade No 2
Nominal Sizes: D1 = 4 in
D2 = 2 in
Dressed Sizes: d1 = 3.50 in
b = d2 = 1.50 in
Dressed Sizes: Table 1B, p.14 Supplement
Classification: Visually Graded.

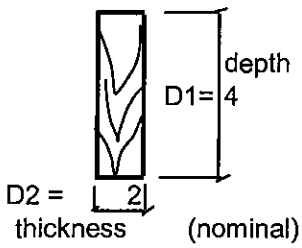

Cross section area **A =** 3.50 × 1.50 = **5.25** sqi

Dimension lumber – refers to lumber from 2" to 4" (nominal) thick,
NDS 4.1.3.2 and 2" (nominal) or more width

Design values: "Reference Design Value", Tables 4B, NDS **Supplement**

Fb =	1500	psi	bending
Ft =	825	psi	tension parallel to grain
Fv =	175	psi	shear parallel to grain
Fcp =	565	psi	compression perpendicular to grain
Fc =	1650	psi	compression parallel to grain
E =	1600000	psi	modulus of elasticity
Emin =	580000	psi	modulus of elasticity (min)

Emin' = 580000 psi

Adjustment Factors

(for normal building environmental, see Manual, p. 13)

C_D =	1.60	load duration factor (wind) see Table 2.3.2 p.9
C_F =	1.00	size factor (for Southern Pine already included in tabulated values, see p. 37)
Cr =	1.00	repetitive member factor, p. 28
C_L =		beam stability factor (calculated below)
C_P =		column stability factor (calculated below)

Beam Stability Factor, C_L (see 3.3.3, p.13)

Member unsupported length Lu = 5.9 ft = 71 in d1 = 3.50 in

Lu/d1= 71 / 3.50 = 20.3

If **Lu/d1 ≥ 7** Use the following Eq.:

Member effective length: Le = 1.63 × Lu + 3 × d1

Le = 1.63 × 71 + 3 × 3.50 = 126 in

If **Lu/d1 < 7** Use the following Eq.:

Le = 2.06 × Lu = 2.06 × 71.04 = 146 in

Use: Le = 126 in

Slenderness ratio: $R_B = \sqrt{Le \times d1 / b^2} = \sqrt{126 \times 3.50 / 2.25} = 14.0$

R_B = 14.0 < 50 **ok!**

$(R_B)^2$ = 196

Fb* — reference bending design value multiplied by all adjustment factors, except C_L

Fb*= Fb × C_D × C_F × Cr =

= 1500 × 1.60 × 1.00 × 1.00 = **2400** psi

F_{bE} = 1.20 × Emin' / R_B^2 = 1.20 × 580000 / 196 = 3543

a = F_{bE} / Fb* = 3543 / 2400 = 1.48

b = (1 + a) / 1.9 = (1 + 1.48) / 1.9 = 1.30

C_L = b — √ b^2 — a / 0.95 =

C_L = 1.3 — √ 1.7 — 1.48 / 0.95 = **0.92**

Fb' = Fb* × C_L = 2400 × 0.92 = **2215** psi

Column stability factor Cp

(see 3.7 - p.19)

F*c — reference compression design value multiplied by all adjustment factors, except **Cp**

$F^*c = Fc \times C_D \times C_F$

$F^*c = 1650 \times 1.60 \times 1.00 = \mathbf{2640}$ psi

Unbraced length of the compressed member L = 71 in (defined above)

(pinned - pinned) Ke = 1.00 effective length coefficient, See Appendix G, p.156

$Le = Ke \times L = 1.00 \times 71 = 71$ in

Re - the slenderness ratio, for columns with rectangular cross section shall be taken as the larger of the ratios Lx/d1 or Lz/d2

$Re = Le / d2 = 71.04 / 1.50 = 47.4 < 50$ **ok!**

$\boxed{F^*c = \mathbf{2640}}$ psi (see calculations above)

$$F_{cE} = \frac{K \times Emin'}{(Re)^2} = \frac{0.822 \times 580000}{47.4 \times 47.4} = 213$$

$$k1 = F_{cE} / F^*c = 213 / 2640 = 0.08$$

c = 0.80 — for sawn lumber

$$k2 = \frac{1 + k1}{2c} = \frac{1 + 0.08}{2 \times 0.80} = 0.68$$

$$k3 = k2^2 = 0.68 \times 0.68 = 0.46$$

$$Cp = k2 - \sqrt{k3 - k1 / c}$$

$$\mathbf{Cp} = 0.68 - \sqrt{0.46 - 0.08 / 0.80} = \mathbf{0.079}$$

Corrected value **Fc' =** $2640 \times 0.079 =$ **209** psi

Check Stresses

a) Bending (bending load applied to narrow face of member)

Bending Moment in member $M = 0.39$ k-ft $=$ 4680 p - in (see STAAD)

Modulus of inertia $I = \frac{d2 \times d1\text{^}3}{12} = \frac{1.50 \times 3.50 \times 3.50 \times 3.50}{12} =$ **5** in^4

Section modulus $S = \frac{d2 \times d1\text{^}2}{6} = \frac{1.50 \times 3.50 \times 3.50}{6} =$ **3.1** in^3

Actual bending Stress $f_{b1} = M / S =$ 4680 / 3.1 $=$ 1528 psi

$f_{b1} < F_{bE} = 1.20 \times Emin' / (R_B)\text{^}2$

$F_{bE} = 1.20 \times 580000 / 196 = 3543$ psi

Use: $f_{b1} = 1528$ psi

b) Compression

Compression in member $P = 0.18$ k $=$ 180 lb (see STAAD)

Actual compression Stress $fc = P / A =$ 180 / 5.3 $=$ **34** psi

Le1 = Le = 71 in d2 = 1.5 in

Le1 / d2 = 71 / 1.5 = 47.4 (Le1 / d2)^2 = 2243

$f_c < F_{cE1} = 0.82 \times Emin' / (Le1 / d2)\text{^}2$

$F_{cE1} = 0.82 \times 580000 / 2243.0 = 213$ psi

Use: **fc** = 34 psi

Member subjected to a combination of bending and compression shall be proportioned that:

$$\boxed{\left(\frac{fc}{Fc'}\right)^{\wedge 2} + \frac{f_{b1}}{F_{b1}' \left(1 - (fc / F_{cE1})\right)} < 1}$$ (see 3.9.2)

fc / Fc' = 34 / 209 = 0.16 0.16 ^2 = 0.03

$f_{b1} = 1528$ psi

$F_{b1}' = Fb' = 2215$ psi

$(1 - fc / F_{cE1}) = 1 - 34 / 213 = 0.84$

$$\frac{f_{b1}}{F_{b1}' \left(1 - fc / F_{cE1}\right)} = \frac{1528}{2215 \times 0.84} = 0.82$$

0.03 + 0.82 = 0.85 < 1.00 **ok!**

Halcrow
A CH2M HILL COMPANY

PROJECT	Glynn Archer School, Florida			SHEET NO ____	OF ____
SUBJECT	Roof Truss Structural assessment		Uplift	JOB NO	
	Compression member	8	Truss B - 1	MADE	YB 16-Aug-12
				CHKD	

Compression member 8

All design procedures will be done according to
*The National Design Specification for Wood Construction (**NDS**)* 2005

Species: Southern Pine, grade 2
Nominal Sizes: D1 = 8.0 in
D2 = 2.0 in
Dressed Sizes: d1 = 7.50 in
d2 = 1.50 in
Dressed Sizes: Table 1B, p.14 Supplement, Section Properties
Classification: Visually Graded

Cross section Area A = 7.50 × 1.50 = **11.25** In^2

Dimension lumber –
NDS 4.1.3.2

refers to lumber from 2" to 4" (nominal) thick,
and 2" (nominal) or more width

Design values:

"Reference Design Value", Table 4B, NDS **Supplement**

Fc = 1550 psi compression parallel to grain

E = 1600000 psi modulus of elasticity

Emin = 580000 psi modulus of elasticity (min)

Adjustment Factors

(for normal building environmental, see Manual, p. 13)

C_D = 1.60 load duration factor (wind) see Table 2.3.2 p.9

C_F = 1.00 size factor for Southern Pine already incorporated in tabulated values (see p. 37)

C_p = column stability factor (calculated below)

F*c - tabulated compression design value multiplied by all adjustment factors, except **Cp**

F*c = Fb × C_D × C_F =

= 1550 × 1.60 × 1.00 = **2480** psi

Emin' = Emin = 580000 psi

Calculation of column stability factor Cp (see 3.7 - p.19)

Unbraced length of the compressed member L = 142 in = 11.8 ft

(pinned - pinned) Ke = 1.00 effective length coefficient, See Appendix G, p.156

Le = Ke × L = 1.00 x 142 = 142 in

Re - the slenderness ratio, for columns with rectangular cross section shall be taken as the larger of the ratios Lx/d1 or Lz/d2

Re = Le / d2 = 142.08 / 1.50 = 95 > 50 ng!

F*c = **2480** psi (see calculations above)

$$F_{cE} = \frac{K \times Emin'}{(Re)^2} = \frac{0.822 \times 580000}{95 \times 95} = 53$$

k1 = F_{cE} / F*c = 53 / 2480 = 0.02

c = 0.80 – for sawn lumber

$$k2 = \frac{1 + k1}{2c} = \frac{1 + 0.02}{2 \times 0.80} = 0.64$$

k3 =k2 ^ 2 = 0.64 × 0.64 = 0.41

$$Cp = k2 - \sqrt{k3 - k1 / c}$$

$$\mathbf{Cp} = 0.64 - \sqrt{0.41 - 0.02 / 0.80} = \mathbf{0.021}$$

Corrected value Fc' = 2480 × 0.021 = **53** psi

Allowable compression force P = A × Fc' = 11.25 × 53 = 595 p

Compression in considered member P = 0.74 k (see STAAD)

P = 0.60 k < 0.74 k ng!

Truss B - 2

Truss member checking

Halcrow
A CH2M HILL COMPANY

		SHEET NO		OF	
PROJECT	Glynn Archer School, Florida	JOB NO			
SUBJECT	Roof Truss Evaluation	MADE BY	YB	DATE	16-Aug-12
	Summary of Truss Member checking	CHKD BY		DATE	

Truss B - 2

Gravity Loads

Member #	Cross section			Governing Loads	Conclusion
	b (in)	h (in)	A (sqi)		
3	1.50	5.50	8.25	Bending and compression	ok
7	0.75	5.50	4.13	Compression	ng
9	0.75	5.50	4.13	Tension	ok

Uplift Loads

Member #	Cross section			Governing Loads	Conclusion
	b (in)	h (in)	A (sqi)		
3	1.50	5.50	8.25	Bending and Tension	ok
7	0.75	5.50	4.13	Tension	ok
9	0.75	5.50	4.13	Compression	ng

Software licensed to Halcrow	Job No ?	Sheet No 1	Rev
	Part ROOF TRUSS B-2		
Job Title ROOF TRUSS B-2	Ref 1		
	By BY	Date 08/11/12	Chd
Client	File 4 - Truss B - 2.std	Date/Time 14-Aug-2012 08:32	

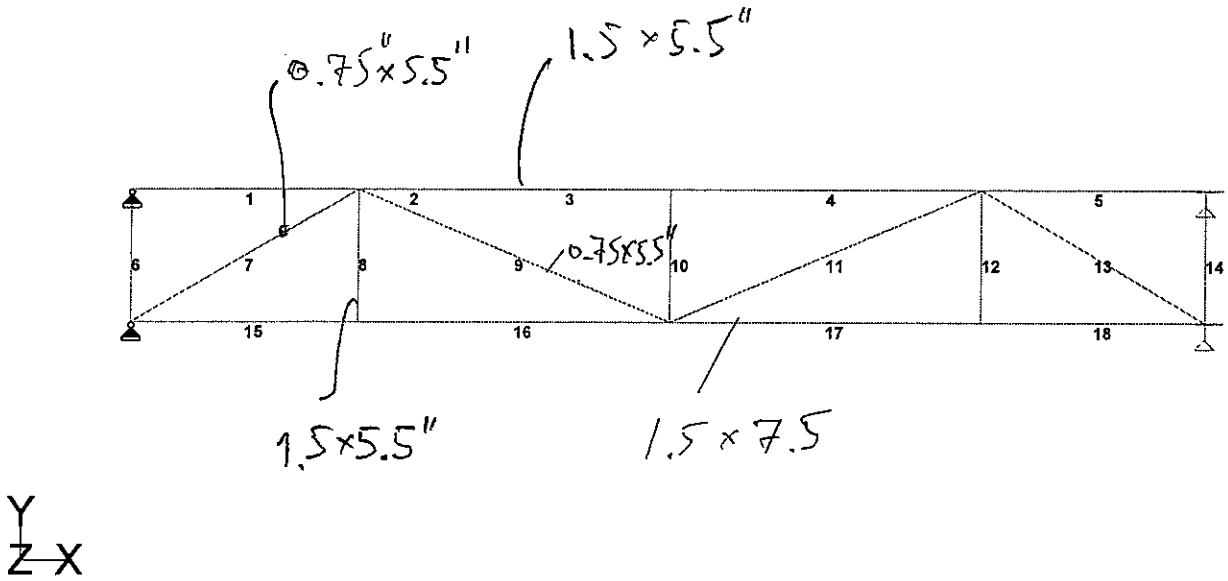

Load 1

Software licensed to Halcrow	Job No ?	Sheet No 1	Rev
	Part ROOF TRUSS B-2		
Job Title ROOF TRUSS B-2	Ref 1		
	By BY	Date 08/11/12	Chd
Client	File 4 - Truss B - 2.std	Date/Time 14-Aug-2012 08:32	

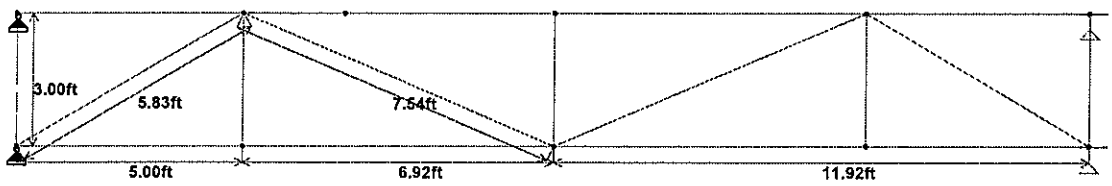

Load 1

Truss B - 2

Gravity Loads

Software licensed to Halcrow	Job No ?	Sheet No 1	Rev
	Part ROOF TRUSS B-2		
Job Title ROOF TRUSS B-2	Ref 1		
	By BY	Date 08/11/12	Chd
Client	File 4 - Truss B - 2.std	Date/Time 14-Aug-2012 08:32	

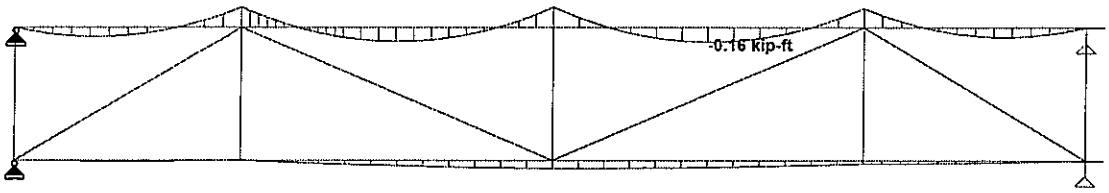

Load 101 : Bending Z
Moment - kip-ft

Software licensed to Halcrow	Job No ?	Sheet No 1	Rev
	Part ROOF TRUSS B-2		
Job Title ROOF TRUSS B-2	Ref 1		
	By BY	Date 08/11/12	Chd
Client	File 4 - Truss B - 2.std	Date/Time 14-Aug-2012 08:32	

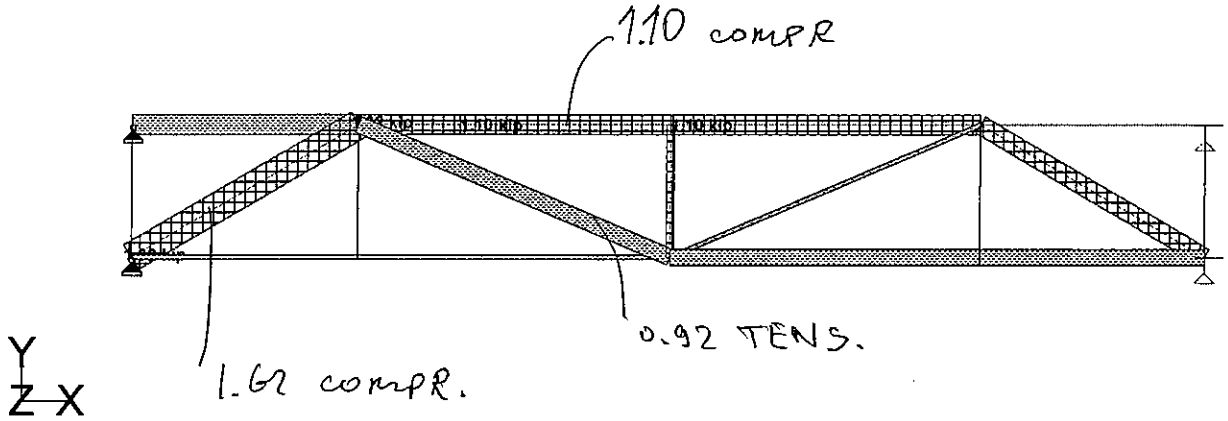

Load 101 : Axial Force
Force - kip

Bending and Compression member 3

All design procedures will be done according to
*The National Design Specification for Wood Construction (**NDS**)* 2005, (parag. 3.9.2)

Species: Southern Pine, grade No 2
Nominal Sizes: D1 = 6 in
D2 = 2 in
Dressed Sizes: d1 = 5.50 in
b = d2 = 1.50 in
Dressed Sizes: Table 1B, p.14 Supplement
Classification: Visually Graded

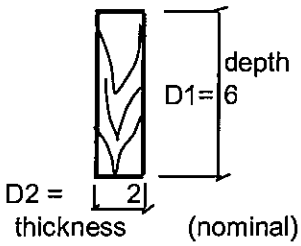

Cross section area **A =** 5.50 × 1.50 = **8.25** sqi

Dimension lumber –
NDS 4.1.3.2

refers to lumber from 2" to 4" (nominal) thick,
and 2" (nominal) or more width

Design values:

"Reference Design Value", Tables 4B, NDS **Supplement**

Fb =	1250	psi	bending
Ft =	725	psi	tension parallel to grain
Fv =	175	psi	shear parallel to grain
Fcp =	565	psi	compression perpendicular to grain
Fc =	1600	psi	compression parallel to grain
E =	1600000	psi	modulus of elasticity
Emin =	580000	psi	modulus of elasticity (min)

Emin' = 580000 psi

Adjustment Factors

(for normal building environmental, see Manual, p. 13)

C_D =	1.60	load duration factor (wind) see Table 2.3.2 p.9
C_F =	1.00	size factor (for Southern Pine already included in tabulated values; see p. 37)
Cr =	1.00	repetitive member factor, p. 28
C_L =		beam stability factor (calculated below)
C_P =		column stability factor (calculated below)

Beam Stability Factor, C_L (see 3.3.3, p.13)

Member unsupported length Lu = 2.0 ft = 24 in d1 = 5.50 in

Lu/d1= 24 / 5.50 = 4.4

If **Lu/d1 ≥ 7** Use the following Eq.:

Member effective length: Le = 1.63 × Lu + 3 × d1

Le = 1.63 × 24 + 3 × 5.50 = 56 in

If **Lu/d1 < 7** Use the following Eq.:

Le = 2.06 × Lu = 2.06 × 24 = 49 in

Use: Le = 49 in

Slenderness ratio: $R_B = \sqrt{Le \times d1 / b^2} = \sqrt{56 \times 5.50 / 2.25} = 11.7$

R_B = 11.7 < 50 **ok!**

$(R_B)^2$ = 136

Fb* — reference bending design value multiplied by all adjustment factors, except C_L

Fb*= Fb × C_D × C_F × Cr =

= 1250 × 1.60 × 1.00 × 1.00 = **2000** psi

F_{bE} = 1.20 × Emin' / R_B^2 = 1.20 × 580000 / 136 = 5119

a = F_{bE} / Fb* = 5119 / 2000 = 2.56

b = (1 + a) / 1.9 = (1 + 2.56) / 1.9 = 1.87

$C_L = b - \sqrt{b^2 - a / 0.95} =$

C_L = $1.87 - \sqrt{3.51 - 2.56 / 0.95} =$ **0.97**

Fb' = Fb* × C_L = 2000 × 0.97 = **1941** psi

Column stability factor Cp

(see 3.7 - p.19)

F*c — reference compression design value multiplied by all adjustment factors, except **Cp**

$F^*c = Fc \times C_D \times C_F$

$F^*c = 1600 \times 1.60 \times 1.00 = \mathbf{2560}$ psi

Unbraced length of the compressed member L = 24 in (defined above)

(pinned - pinned) Ke = 1.00 effective length coefficient, See Appendix G, p.156

$Le = Ke \times L = 1.00 \times 24 = 24$ in

Re - the slenderness ratio, for columns with rectangular cross section shall be taken as the larger of the ratios Lx/d1 or Lz/d2

$Re = Le / d2 = 24 / 1.50 = 16.0 < 50$ **ok!**

$\boxed{F^*c = \mathbf{2560}}$ psi (see calculations above)

$$F_{cE} = \frac{K \times Emin'}{(Re)^2} = \frac{0.822 \times 580000}{16.0 \times 16.0} = 1862$$

$k1 = F_{cE} / F^*c = 1862 / 2560 = 0.73$

c = 0.80 — for sawn lumber

$$k2 = \frac{1 + k1}{2c} = \frac{1 + 0.73}{2 \times 0.80} = 1.08$$

$k3 = k2 \wedge 2 = 1.08 \times 1.08 = 1.17$

$$Cp = k2 - \sqrt{k3 - k1 / c}$$

$$\mathbf{Cp} = 1.08 - \sqrt{1.17 - 0.73 / 0.80} = \mathbf{0.573}$$

Corrected value **Fc' =** $2560 \times 0.573 = \mathbf{1468}$ psi

Check Stresses

a) Bending (bending load applied to narrow face of member)

Bending Moment in member $M = 0.16$ k-ft $= 1920$ p - in (see STAAD)

Modulus of inertia $I = \frac{d2 \times d1^3}{12} = \frac{1.50 \times 5.50 \times 5.50 \times 5.50}{12} =$ **21** in^4

Section modulus $S = \frac{d2 \times d1^2}{6} = \frac{1.50 \times 5.50 \times 5.50}{6} =$ **7.6** in^3

Actual bending Stress $f_{b1} = M / S = 1920 / 7.6 = 254$ psi

$f_{b1} < F_{bE} = 1.20 \times Emin' / (R_B)^2$

$F_{bE} = 1.20 \times 580000 / 136 = 5119$ psi

Use: $f_{b1} = 254$ psi

b) Compression

Compression in member $P = 1.10$ k $= 1100$ lb (see STAAD)

Actual compression Stress $fc = P / A = 1100 / 8.3 = 133$ psi

$Le1 = Le = 24$ in $d2 = 1.5$ in

$Le1 / d2 = 24 / 1.5 = 16.0$ $(Le1 / d2)^2 = 256$

$f_c < F_{cE1} = 0.82 \times Emin' / (Le1 / d2)^2$

$F_{cE1} = 0.82 \times 580000 / 256.0 = 1862$ psi

Use: $fc = 133$ psi

Member subjected to a combination of bending and compression shall be proportioned that:

$$\boxed{\left(\frac{fc}{Fc'}\right)^2 + \frac{f_{b1}}{F_{b1}' \left(1 - (fc / F_{cE1})\right)} < 1}$$ (see 3.9.2)

$fc / Fc' = 133 / 1468 = 0.09$ $0.09^2 = 0.01$

$f_{b1} = 254$ psi

$F_{b1}' = Fb' = 1941$ psi

$(1 - fc / F_{cE1}) = 1 - 133 / 1862 = 0.93$

$$\frac{f_{b1}}{F_{b1}' \left(1 - fc / F_{cE1}\right)} = \frac{254}{1941 \times 0.93} = 0.14$$

$0.01 + 0.14 = 0.15$ < 1.00 **ok!**

Compression member 7

All design procedures will be done according to
*The National Design Specification for Wood Construction (**NDS**)* 2005

Species: Southern Pine, grade 2
Nominal Sizes: D1 = 6.0 in
D2 = 1.0 in
Dressed Sizes: d1 = 5.50 in
d2 = 0.75 in
Dressed Sizes: Table 1B, p.14 Supplement, Section Properties
Classification: Visually Graded

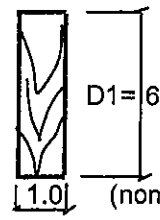

Cross section Area A = 5.50 × 0.75 = **4.13** in^2

Dimension lumber – refers to lumber from 2" to 4" (nominal) thick,
NDS 4.1.3.2 and 2" (nominal) or more width

Design values: "Reference Design Value", Table 4B, NDS **Supplement**

Fc = 1600 psi compression parallel to grain

E = 1600000 psi modulus of elasticity

Emin = 580000 psi modulus of elasticity (min)

Adjustment Factors

(for normal building environmental, see Manual, p. 13)

C_D = 1.60 load duration factor (wind) see Table 2.3.2 p.9

C_F = 1.00 size factor, for Southern Pine already incorporated I tabulated values (see p. 37)

C_p = column stability factor (calculated below)

F*c - tabulated compression design value multiplied by all adjustment factors, except **Cp**

F*c = Fb × C_D × C_F =

= 1600 × 1.60 × 1.00 = **2560** psi

Emin' = Emin = 580000 psi

Calculation of column stability factor Cp (see 3.7 - p.19)

Unbraced length of the compressed member L = 70 in = 5.83 ft

(pinned - pinned) Ke = 1.00 effective length coefficient, See Appendix G, p.156

Le = Ke × L = 1.00 x 70 = 70 in

Re - the slenderness ratio, for columns with rectangular cross section shall be taken as the larger of the ratios Lx/d1 or Lz/d2

Re = Le / d2 = 70 / 0.75 = 93 > 50 ng!

F*c = **2560** psi (see calculations above)

$$F_{cE} = \frac{K \times Emin'}{(Re)^2} = \frac{0.822 \times 580000}{93 \times 93} = 55$$

k1 = F_{cE} / F*c = 55 / 2560 = 0.02

c = 0.80 – for sawn lumber

$$k2 = \frac{1 + k1}{2c} = \frac{1 + 0.02}{2 \times 0.80} = 0.64$$

k3 =k2 ^ 2 = 0.64 × 0.64 = 0.41

$$Cp = k2 - \sqrt{k3 - k1 / c}$$

$$\mathbf{Cp} = 0.64 - \sqrt{0.41 - 0.02 / 0.80} = \mathbf{0.021}$$

Corrected value Fc' = 2560 × 0.021 = **55** psi

Allowable compression force P = A × Fc' = 4.13 × 55 = 225 p

Compression in considered member P = 1.62 k (see STAAD)

P = 0.23 k < 1.62 k ng!

Truss B - 2

Uplift Loads

Software licensed to Halcrow	Job No ?	Sheet No 1	Rev
	Part ROOF TRUSS B-2		
Job Title ROOF TRUSS B-2	Ref 1		
	By BY	Date 08/11/12	Chd
Client	File 4 - Truss B - 2.std	Date/Time 14-Aug-2012 08:32	

UPLIFT

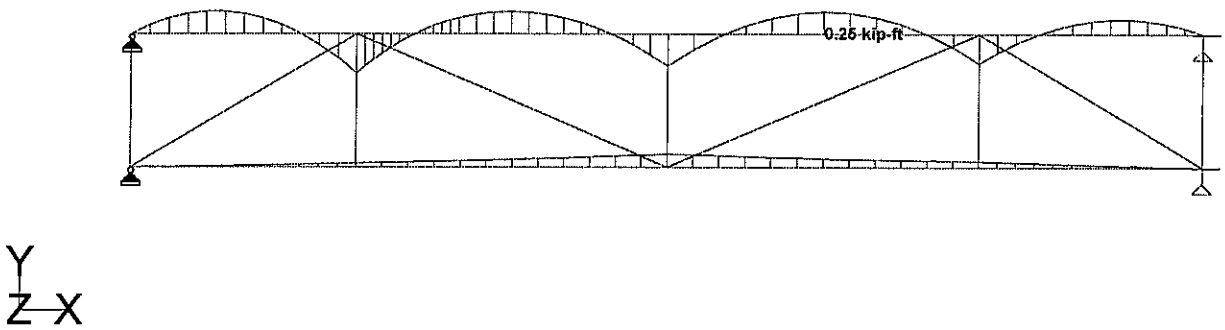

Load 104 : Bending Z
Moment - kip-ft

Software licensed to Halcrow	Job No ?	Sheet No 1	Rev
	Part ROOF TRUSS B-2		
Job Title ROOF TRUSS B-2	Ref 1		
	By BY	Date 08/11/12	Chd
Client	File 4 - Truss B - 2.std	Date/Time 14-Aug-2012 08:32	

UPLIFT

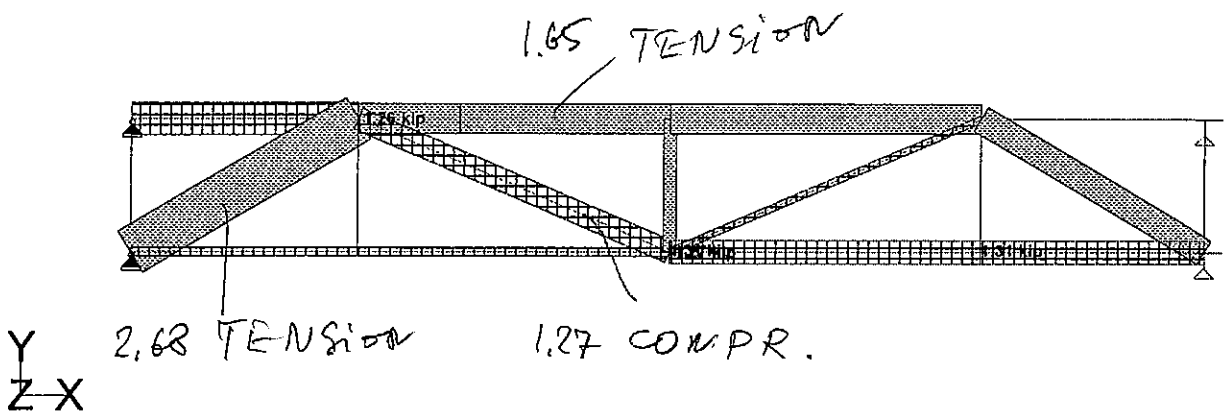

Load 104 : Axial Force
Force - kip

Bending and Tension Member 3

All design procedures will be done according to
*The National Design Specification for Wood Construction (**NDS**)* 2005

Species: Southern Pine, grade No 2
Nominal Sizes: B = 2 in
D = 6 in
Dressed Sizes: b = 1.50 in
d = 5.50 in
Dressed Sizes: Table 1B, p.14 Supplement
Classification: Visually Graded

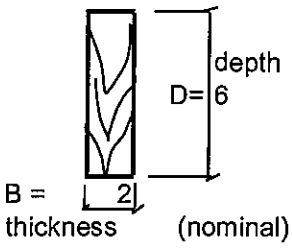

Cross section Area A = 1.50 × 5.50 = **8.25** sqi

Dimension lumber – refers to lumber from 2" to 4" (nominal) thick,
NDS 4.1.3.2 and 2" (nominal) or more width

Design values:			"Reference Design Value", Tables 4B, NDS **Supplement**
Fb =	1250	psi	bending
Ft =	725	psi	tension parallel to grain
Fv =	175	psi	shear parallel to grain
Fcp =	565	psi	compression perpendicular to grain
Fc =	1600	psi	compression parallel to grain
E =	1600000	psi	modulus of elasticity
Emin =	580000	psi	modulus of elasticity (min)
Emin' =	580000	psi	

Adjustment Factors

(for normal building environmental, see Manual, p. 13)

C_D = 1.60 load duration factor (wind) see Table 2.3.2 p.9

C_F = 1.00 size factor (for Southern Pine already included in tabulated values, p. 37)

Cr = 1.00 repetitive member factor, p. 28

C_L = 1.00 beam stability factor (not considered for this case, see 3.9.1)

Fb*= Fb × C_D × C_F × Cr × C_L =

= 1250 × 1.60 × 1.00 × 1.00 × 1.00 = **2000** psi

Ft'= Ft × C_D × C_F =

= 725 × 1.60 × 1.00 = **1160** psi

Check Stresses

a) Bending

Bending Moment in the member M = 0.26 k-ft = 3120 p - in (see STAAD)

Modulus of inertia $I = \frac{b \times d^3}{12} = \frac{1.5 \times 5.50 \times 5.50 \times 5.50}{12} =$ **20.8** in^4

Section modulus $S = \frac{b \times d^2}{6} = \frac{1.5 \times 5.50 \times 5.50}{6} =$ **7.6** in^3

Actual bending stress fb = M / S = 3120 / 7.6 = 413 psi

b) Tension

Tension in the member T = 1.65 k = 1650 lb (see STAAD)

Actual tension stress ft = T / A = 1650 / 8.3 = 200 psi

Member subjected to a combination of bending and tension shall be so proportioned that:

$$\boxed{\frac{ft}{Ft'} + \frac{fb}{Fb^*} < 1}$$

$$\frac{200}{1160} + \frac{413}{2000} = 0.17 + 0.21 = 0.38$$ **ok!**

Compression member 9

All design procedures will be done according to
*The National Design Specification for Wood Construction (**NDS**)* 2005

Species: Southern Pine, grade 2
Nominal Sizes: D1 = 6.0 in
D2 = 1.0 in
Dressed Sizes: d1 = 5.50 in
d2 = 0.75 in
Dressed Sizes: Table 1B, p.14 Supplement, Section Properties
Classification: Visually Graded

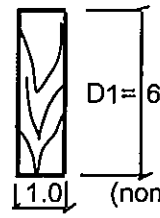

Cross section Area A = 5.50 × 0.75 = **4.13** In^2

Dimension lumber – refers to lumber from 2" to 4" (nominal) thick,
NDS 4.1.3.2 and 2" (nominal) or more width

Design values: "Reference Design Value", Table 4B, NDS **Supplement**

Fc = 1600 psi compression parallel to grain

E = 1600000 psi modulus of elasticity

Emin = 580000 psi modulus of elasticity (min)

Adjustment Factors

(for normal building environmental, see Manual, p. 13)

C_D = 1.60 load duration factor (wind) see Table 2.3.2 p.9

C_F = 1.00 size factor - for Southern Pine already incorporated in tabulated values (see p. 37)

C_p = column stability factor (calculated below)

F*c - tabulated compression design value multiplied by all adjustment factors, except **Cp**

F*c = Fb × C_D × C_F =

= 1600 × 1.60 × 1.00 = **2560** psi

Emin' = Emin = 580000 psi

Calculation of column stability factor Cp (see 3.7 - p.19)

Unbraced length of the compressed member L = 90 in = 7.5 ft

(pinned - pinned) Ke = 1.00 effective length coefficient, See Appendix G, p.156

Le = Ke × L = 1.00 x 90 = 90 in

Re - the slenderness ratio, for columns with rectangular cross section shall be taken as the larger of the ratios Lx/d1 or Lz/d2

Re = Le / d2 = 90.48 / 0.75 = 121 > 50 ng!

F*c = **2560** psi (see calculations above)

$$F_{cE} = \frac{K \times Emin'}{(Re)^2} = \frac{0.822 \times 580000}{121 \times 121} = 33$$

k1 = F_{cE} / F*c = 33 / 2560 = 0.01

c = 0.80 – for sawn lumber

$$k2 = \frac{1 + k1}{2c} = \frac{1 + 0.01}{2 \times 0.80} = 0.63$$

k3 =k2 ^ 2 = 0.63 × 0.63 = 0.40

$$Cp = k2 - \sqrt{k3 - k1 / c}$$

$$\mathbf{Cp} = 0.63 - \sqrt{0.40 - 0.01 / 0.80} = \mathbf{0.013}$$

Corrected value Fc' = 2560 × 0.013 = **33** psi

Allowable compression force P = A × Fc' = 4.13 × 33 = 135 p

Compression in considered member P = 1.27 k (see STAAD)

P = 0.13 k < 1.27 k ng!

Truss B - 3

Truss member checking

Halcrow
A CH2M HILL COMPANY

PROJECT	Glynn Archer School, Florida	SHEET NO		OF	
		JOB NO			
SUBJECT	Roof Truss Evaluation	MADE BY	YB	DATE	16-Aug-12
	Summary of Truss Member checking	CHKD BY		DATE	

Truss B - 3

Gravity Loads

Member #	Cross section b (in)	h (in)	A (sqi)	Governing Loads	Conclusion
5	1.50	5.50	8.25	Bending and compression	ok
9	0.75	5.50	4.13	Compression	ng
16	1.50	7.50	11.25	Tension	ok

Uplift Loads

Member #	Cross section b (in)	h (in)	A (sqi)	Governing Loads	Conclusion
5	1.50	5.50	8.25	Bending and Tension	ok
9	0.75	5.50	4.13	Tension	ok
13	0.75	5.50	4.13	Compression	ng

Software licensed to Halcrow	Job No ?	Sheet No 1	Rev
	Part ROOF TRUSS B-3		
Job Title ROOF TRUSS B-3	Ref 1		
	By YB	Date 08/11/12	Chd
Client	File 5 - Truss B - 3.std	Date/Time 14-Aug-2012 07:25	

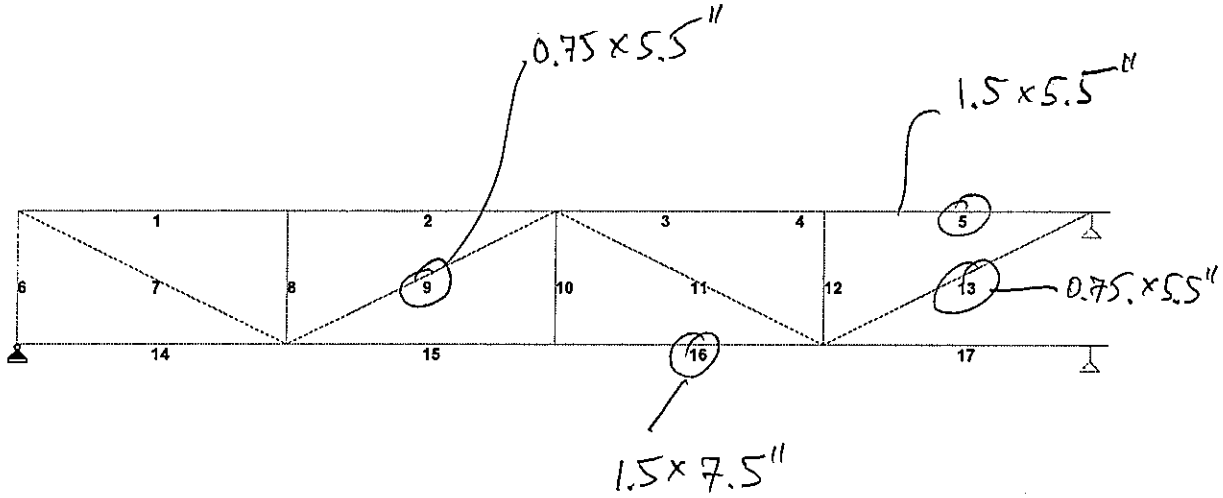

Load 1

Software licensed to Halcrow	Job No ?	Sheet No 1	Rev
	Part ROOF TRUSS B-3		
Job Title ROOF TRUSS B-3	Ref 1		
	By YB	Date 08/11/12	Chd
Client	File 5 - Truss B - 3.std	Date/Time 14-Aug-2012 07:25	

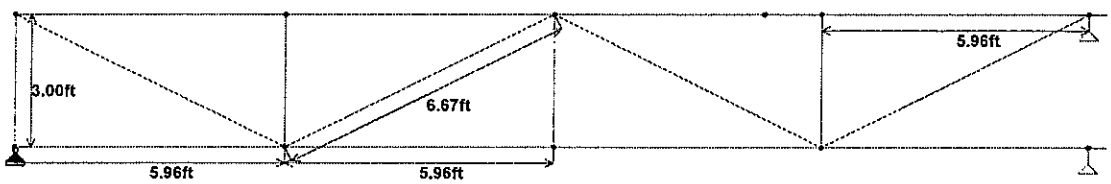

Load 1

Truss B - 3

Gravity Loads

Software licensed to Halcrow	Job No ?	Sheet No 1	Rev
	Part ROOF TRUSS B-3		
Job Title ROOF TRUSS B-3	Ref 1		
	By YB	Date 08/11/12	Chd
Client	File 5 - Truss B - 3.std	Date/Time 14-Aug-2012 07:25	

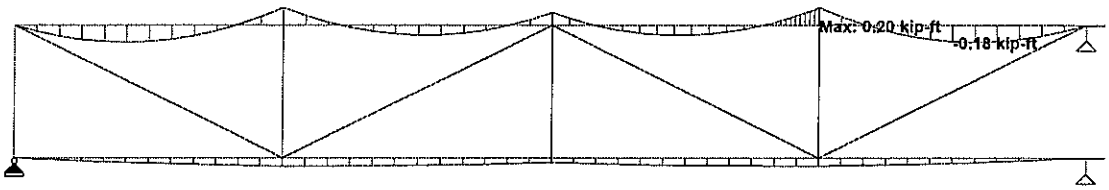

Load 101 : Bending Z
Moment - kip-ft

Software licensed to Halcrow	Job No ?	Sheet No 1	Rev
	Part ROOF TRUSS B-3		
Job Title ROOF TRUSS B-3	Ref 1		
	By YB	Date 08/11/12	Chd
Client	File 5 - Truss B - 3.std	Date/Time 14-Aug-2012 07:25	

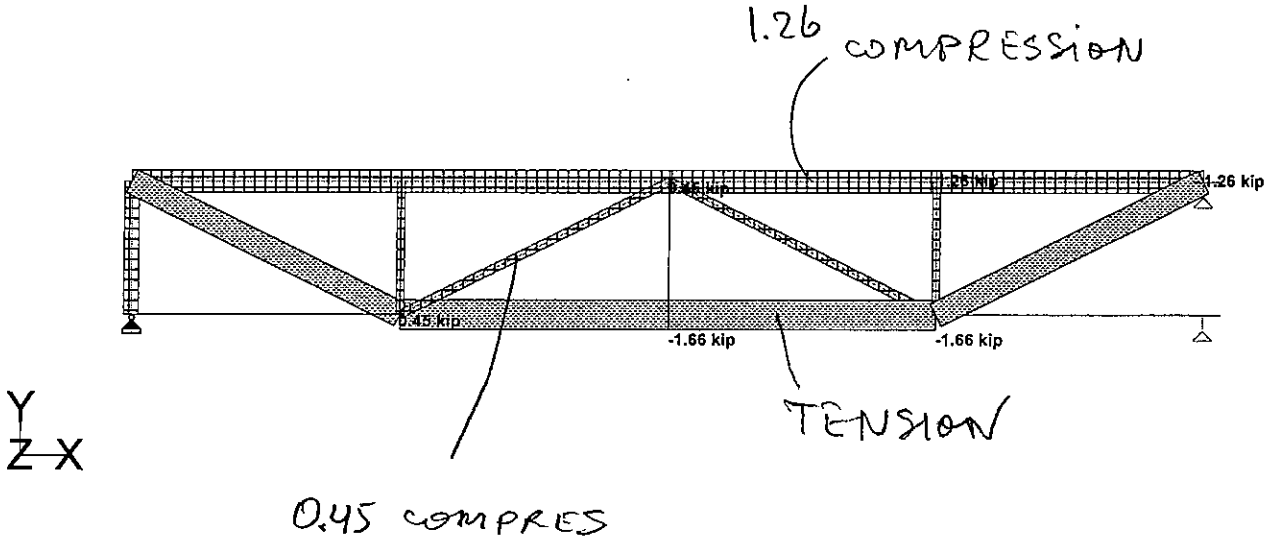

Load 101 : Axial Force
Force - kip

Bending and Compression member 5

All design procedures will be done according to
*The National Design Specification for Wood Construction (**NDS**)* 2005, (parag. 3.9.2)

Species: Southern Pine, grade No 2
Nominal Sizes: D1 = 6 in
D2 = 2 in
Dressed Sizes: d1 = 5.50 in
b = d2 = 1.50 in
Dressed Sizes: Table 1B, p.14 Supplement
Classification: Visually Graded

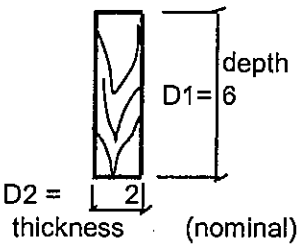

Cross section area **A =** 5.50 × 1.50 = **8.25** sqi

Dimension lumber –
NDS 4.1.3.2

refers to lumber from 2" to 4" (nominal) thick,
and 2" (nominal) or more width

Design values:

"Reference Design Value", Tables 4B, NDS **Supplement**

Fb =	1250	psi	bending
Ft =	725	psi	tension parallel to grain
Fv =	175	psi	shear parallel to grain
Fcp =	565	psi	compression perpendicular to grain
Fc =	1600	psi	compression parallel to grain
E =	1600000	psi	modulus of elasticity
Emin =	580000	psi	modulus of elasticity (min)

Emin' = 580000 psi

Adjustment Factors

(for normal building environmental, see Manual, p. 13)

C_D =	1.60	load duration factor (wind) see Table 2.3.2 p.9
C_F =	1.00	size factor (for Southern Pine already included in tabulated values, see p. 37)
Cr =	1.00	repetitive member factor, p. 28
C_L =		beam stability factor (calculated below)
C_P =		column stability factor (calculated below)

Beam Stability Factor, C_L (see 3.3.3, p.13)

Member unsupported length $Lu = 2.0$ ft = 24 in $d1 = 5.50$ in

$Lu/d1 = 24 / 5.50 = 4.4$

If $\boxed{Lu/d1 \geq 7}$ Use the following Eq.:

Member effective length: $Le = 1.63 \times Lu + 3 \times d1$

$Le = 1.63 \times 24 + 3 \times 5.50 = 56$ in

If $\boxed{Lu/d1 < 7}$ Use the following Eq.:

$Le = 2.06 \times Lu = 2.06 \times 24 = 49$ in

Use: $Le = 49$ in

Slenderness ratio: $R_B = \sqrt{Le \times d1 / b^2} = \sqrt{56 \times 5.50 / 2.25} = 11.7$

$R_B = 11.7 < 50$ **ok!**

$(R_B)^2 = 136$

Fb^* — reference bending design value multiplied by all adjustment factors, except C_L

$Fb^* = Fb \times C_D \times C_F \times Cr =$

$= 1250 \times 1.60 \times 1.00 \times 1.00 =$ **2000** psi

$F_{bE} = 1.20 \times Emin' / R_B^2 = 1.20 \times 580000 / 136 = 5119$

$a = F_{bE} / Fb^* = 5119 / 2000 = 2.56$

$b = (1 + a) / 1.9 = (1 + 2.56) / 1.9 = 1.87$

$C_L = b - \sqrt{b^2 - a / 0.95} =$

$\mathbf{C_L} = 1.87 - \sqrt{3.51 - 2.56 / 0.95} =$ **0.97**

Fb' = $Fb^* \times C_L = 2000 \times 0.97 =$ **1941** psi

Column stability factor Cp

(see 3.7 - p.19)

F*c — reference compression design value multiplied by all adjustment factors, except **Cp**

$F^*c = Fc \times C_D \times C_F$

$F^*c = 1600 \times 1.60 \times 1.00 = \mathbf{2560}$ psi

Unbraced length of the compressed member L = 24 in (defined above)

(pinned - pinned) Ke = 1.00 effective length coefficient, See Appendix G, p.156

$Le = Ke \times L = 1.00 \times 24 = 24$ in

Re - the slenderness ratio, for columns with rectangular cross section shall be taken as the larger of the ratios Lx/d1 or Lz/d2

$Re = Le / d2 = 24 / 1.50 = 16.0 < 50$ **ok!**

$\boxed{F^*c = \mathbf{2560}}$ psi (see calculations above)

$$F_{cE} = \frac{K \times Emin'}{(Re)^2} = \frac{0.822 \times 580000}{16.0 \times 16.0} = 1862$$

$$k1 = F_{cE} / F^*c = 1862 / 2560 = 0.73$$

c = 0.80 — for sawn lumber

$$k2 = \frac{1 + k1}{2c} = \frac{1 + 0.73}{2 \times 0.80} = 1.08$$

$$k3 = k2^2 = 1.08 \times 1.08 = 1.17$$

$$Cp = k2 - \sqrt{k3 - k1 / c}$$

$$\mathbf{Cp} = 1.08 - \sqrt{1.17 - 0.73 / 0.80} = \mathbf{0.573}$$

Corrected value **Fc'** = $2560 \times 0.573 = \mathbf{1468}$ psi

Check Stresses

a) Bending (bending load applied to narrow face of member)

Bending Moment in member $M = 0.16$ k-ft $= 1920$ p - in (see STAAD)

Modulus of inertia $I = \frac{d2 \times d1^3}{12} = \frac{1.50 \times 5.50 \times 5.50 \times 5.50}{12} =$ **21** in^4

Section modulus $S = \frac{d2 \times d1^2}{6} = \frac{1.50 \times 5.50 \times 5.50}{6} =$ **7.6** in^3

Actual bending Stress $f_{b1} = M / S = 1920 / 7.6 = 254$ psi

$f_{b1} < F_{bE} = 1.20 \times Emin' / (R_B)^2$

$F_{bE} = 1.20 \times 580000 / 136 = 5119$ psi

Use: $f_{b1} = 254$ psi

b) Compression

Compression in member $P = 1.26$ k $= 1260$ lb (see STAAD)

Actual compression Stress $fc = P / A = 1260 / 8.3 =$ **153** psi

Le1 = Le = 24 in d2 = 1.5 in

Le1 / d2 = 24 / 1.5 = 16.0 (Le1 / d2)^2 = 256

$f_c < F_{cE1} = 0.82 \times Emin' / (Le1 / d2)^2$

$F_{cE1} = 0.82 \times 580000 / 256.0 = 1862$ psi

Use: **fc** = 153 psi

Member subjected to a combination of bending and compression shall be proportioned that:

$$\boxed{\left(\frac{fc}{Fc'}\right)^2 + \frac{f_{b1}}{F_{b1}' \left(1 - (fc / F_{cE1})\right)} < 1}$$ (see 3.9.2)

fc / Fc' = 153 / 1468 = 0.10 0.10 ^2 = 0.01

$f_{b1} = 254$ psi

$F_{b1}' = Fb' = 1941$ psi

$(1 - fc / F_{cE1}) = 1 - 153 / 1862 = 0.92$

$$\frac{f_{b1}}{F_{b1}' \left(1 - fc / F_{cE1}\right)} = \frac{254}{1941 \times 0.92} = 0.14$$

$0.01 + 0.14 = 0.15$ < 1.00 **ok!**

Compression member 9

All design procedures will be done according to
*The National Design Specification for Wood Construction (**NDS**)* 2005

Species: Southern Pine, grade 2
Nominal Sizes: D1 = 6.0 in
D2 = 1.0 in
Dressed Sizes: d1 = 5.50 in
d2 = 0.75 in
Dressed Sizes: Table 1B, p.14 Supplement, Section Properties
Classification: Visually Graded

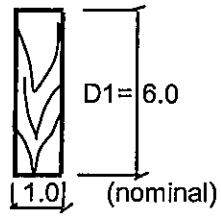

Cross section Area A = 5.50 × 0.75 = **4.13** in^2

Dimension lumber – refers to lumber from 2" to 4" (nominal) thick,
NDS 4.1.3.2 and 2" (nominal) or more width

Design values: "Reference Design Value", Table 4B, NDS **Supplement**

Fc = 1650 psi compression parallel to grain

E = 1600000 psi modulus of elasticity

Emin = 580000 psi modulus of elasticity (min)

Adjustment Factors

(for normal building environmental, see Manual, p. 13)

C_D = 1.60 load duration factor (wind) see Table 2.3.2 p.9

C_F = 1.00 size factor, for Southern Pine already incorporated I tabulated values (see p. 37)

C_p = column stability factor (calculated below)

F*c - tabulated compression design value multiplied by all adjustment factors, except **Cp**

F*c = Fb × C_D × C_F =

= 1650 × 1.60 × 1.00 = **2640** psi

Emin' = Emin = 580000 psi

Calculation of column stability factor Cp (see 3.7 - p.19)

Unbraced length of the compressed member $L = 80$ in $= 6.67$ ft

(pinned - pinned) $Ke = 1.00$ effective length coefficient, See Appendix G, p.156

$Le = Ke \times L = 1.00 \times 80 = 80$ in

Re - the slenderness ratio, for columns with rectangular cross section shall be taken as the larger of the ratios Lx/d1 or Lz/d2

$Re = Le / d2 = 80 / 0.75 = 107 > 50$ ng!

$F^*c = 2640$ psi (see calculations above)

$$F_{cE} = \frac{K \times Emin'}{(Re)^2} = \frac{0.822 \times 580000}{107 \times 107} = 42$$

$k1 = F_{cE} / F^*c = 42 / 2640 = 0.02$

$c = 0.80$ – for sawn lumber

$$k2 = \frac{1 + k1}{2c} = \frac{1 + 0.02}{2 \times 0.80} = 0.63$$

$k3 = k2 \wedge 2 = 0.63 \times 0.63 = 0.40$

$$Cp = k2 - \sqrt{k3 - k1 / c}$$

$$\mathbf{Cp} = 0.63 - \sqrt{0.40 - 0.02 / 0.80} = \mathbf{0.016}$$

Corrected value $Fc' = 2640 \times 0.016 = \mathbf{42}$ psi

Allowable compression force $P = A \times Fc' = 4.13 \times 42 = 172$ p

Compression in considered member $P = 0.45$ k (see STAAD)

P = 0.17 k < 0.45 k ng!

Truss B - 3

Uplift Loads

Software licensed to Halcrow	Job No ?	Sheet No 1	Rev
	Part ROOF TRUSS B-3		
Job Title ROOF TRUSS B-3	Ref 1		
	By YB	Date 08/11/12	Chd
Client	File 5 - Truss B - 3.std	Date/Time 14-Aug-2012 07:25	

UPLIFT

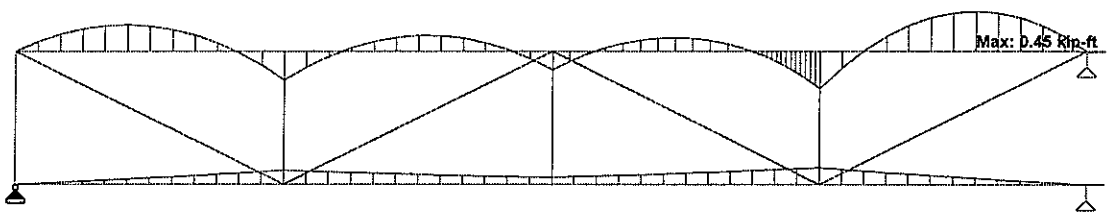

Y
Z X

Load 104 : Bending Z
Moment - kip-ft

Software licensed to Halcrow	Job No ?	Sheet No 1	Rev
	Part ROOF TRUSS B-3		
Job Title ROOF TRUSS B-3	Ref 1		
	By YB	Date 08/11/12	Chd
Client	File 5 - Truss B - 3.std	Date/Time 14-Aug-2012 07:25	

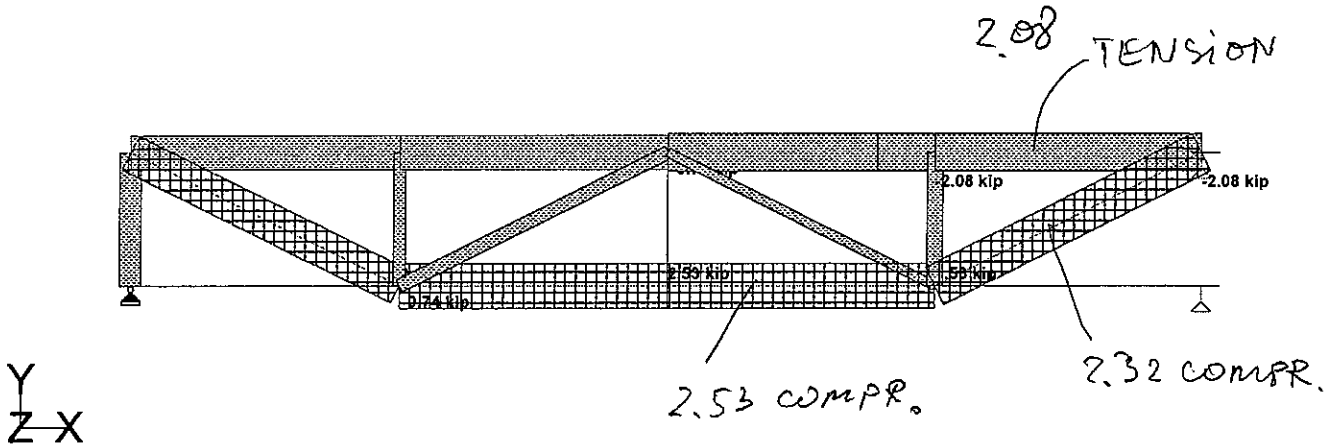

Load 104 : Axial Force
Force - kip

Bending and Tension Member 5

All design procedures will be done according to
*The National Design Specification for Wood Construction (**NDS**)* 2005

Species: Southern Pine, grade No 2
Nominal Sizes: B = 2 in
D = 6 in
Dressed Sizes: b = 1.50 in
d = 5.50 in
Dressed Sizes: Table 1B, p.14 Supplement
Classification: Visually Graded

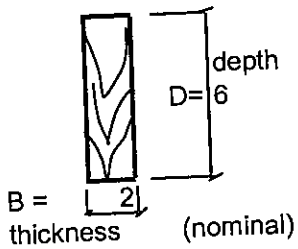

Cross section Area A = 1.50 × 5.50 = **8.25** sqi

Dimension lumber – refers to lumber from 2" to 4" (nominal) thick, and 2" (nominal) or more width
NDS 4.1.3.2

Design values: "Reference Design Value", Tables 4B, NDS **Supplement**

Fb =	1250 psi	bending
Ft =	725 psi	tension parallel to grain
Fv =	175 psi	shear parallel to grain
Fcp =	565 psi	compression perpendicular to grain
Fc =	1600 psi	compression parallel to grain
E =	1600000 psi	modulus of elasticity
Emin =	580000 psi	modulus of elasticity (min)
Emin' =	580000 psi	

Adjustment Factors

(for normal building environmental, see Manual, p. 13)

C_D = 1.60 load duration factor (wind) see Table 2.3.2 p.9

C_F = 1.00 size factor (for Southern Pine already included in tabulated values, p. 37)

Cr = 1.00 repetitive member factor, p. 28

C_L = 1.00 beam stability factor (not considered for this case, see 3.9.1)

Fb*= Fb × C_D × C_F × Cr × C_L =
= 1250 × 1.60 × 1.00 × 1.00 × 1.00 = **2000** psi

Ft'= Ft × C_D × C_F =
= 725 × 1.60 × 1.00 = **1160** psi

Check Stresses

a) Bending

Bending Moment in the member M = 0.45 k-ft = 5400 p - in (see STAAD)

Modulus of inertia $I = \frac{b \times d^3}{12} = \frac{1.5 \times 5.50 \times 5.50 \times 5.50}{12} =$ **20.8** in^4

Section modulus $S = \frac{b \times d^2}{6} = \frac{1.5 \times 5.50 \times 5.50}{6} =$ **7.6** in^3

Actual bending stress fb = M / S = 5400 / 7.6 = 714 psi

b) Tension

Tension in the member T = 2.08 k = 2080 lb (see STAAD)

Actual tension stress ft = T / A = 2080 / 8.3 = 252 psi

Member subjected to a combination of bending and tension shall be so proportioned that:

$$\boxed{\frac{ft}{Ft'} + \frac{fb}{Fb^*} < 1}$$

$$\frac{252}{1160} + \frac{714}{2000} = 0.22 + 0.36 = 0.57$$ **ok!**

Compression member 13

All design procedures will be done according to
*The National Design Specification for Wood Construction (**NDS**)* 2005

Species: Southern Pine, grade 2
Nominal Sizes: D1 = 6.0 in
D2 = 1.0 in
Dressed Sizes: d1 = 5.50 in
d2 = 0.75 in
Dressed Sizes: Table 1B, p.14 Supplement, Section Properties
Classification: Visually Graded

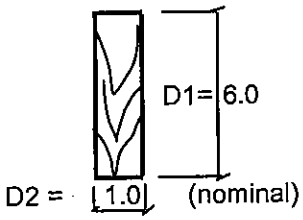

Cross section Area A = 5.50 × 0.75 = **4.13** In^2

Dimension lumber – refers to lumber from 2" to 4" (nominal) thick, and 2" (nominal) or more width
NDS 4.1.3.2

Design values: "Reference Design Value", Table 4B, NDS **Supplement**

Fc = 1600 psi compression parallel to grain

E = 1600000 psi modulus of elasticity

Emin = 580000 psi modulus of elasticity (min)

Adjustment Factors

(for normal building environmental, see Manual, p. 13)

C_D = 1.60 load duration factor (wind) see Table 2.3.2 p.9

C_F = 1.00 size factor, for Southern Pine already incorporated in tabulated values (see p. 37)

C_p = column stability factor (calculated below)

F*c - tabulated compression design value multiplied by all adjustment factors, except **Cp**

$F^*c = Fb \times C_D \times C_F =$

$= 1600 \times 1.60 \times 1.00 =$ **2560** psi

Emin' = Emin = 580000 psi

Calculation of column stability factor Cp (see 3.7 - p.19)

Unbraced length of the compressed member L = 79 in = 6.6 ft

(pinned - pinned) Ke = 1.00 effective length coefficient, See Appendix G, p.156

Le = Ke × L = 1.00 x 79 = 79 in

Re - the slenderness ratio, for columns with rectangular cross section shall be taken as the larger of the ratios Lx/d1 or Lz/d2

Re = Le / d2 = 78.84 / 0.75 = 105 > 50 ng!

F*c = **2560** psi (see calculations above)

$$F_{cE} = \frac{K \times Emin'}{(Re)^2} = \frac{0.822 \times 580000}{105 \times 105} = 43$$

k1 = F_{cE} / F*c = 43 / 2560 = 0.02

c = 0.80 – for sawn lumber

$$k2 = \frac{1 + k1}{2c} = \frac{1 + 0.02}{2 \times 0.80} = 0.64$$

k3 =k2 ^ 2 = 0.64 × 0.64 = 0.40

$$Cp = k2 - \sqrt{k3 - k1 / c}$$

$$\mathbf{Cp} = 0.64 - \sqrt{0.40 - 0.02 / 0.80} = \mathbf{0.017}$$

Corrected value Fc' = 2560 × 0.017 = **43** psi

Allowable compression force P = A × Fc' = 4.13 × 43 = 177 p

Compression in considered member P = 2.32 k (see STAAD)

P = 0.18 k < 2.32 k ng!

Truss B - 4

Truss member checking

Halcrow
A CH2M HILL COMPANY

		SHEET NO		OF	
PROJECT	Glynn Archer School, Florida	JOB NO			
SUBJECT	Roof Truss Evaluation	MADE BY	YB	DATE	16-Aug-12
	Summary of Truss Member checking	CHKD BY		DATE	

Truss B - 4

Gravity Loads

Member #	Cross section b (in)	h (in)	A (sqi)	Governing Loads	Conclusion
2	1.50	5.50	8.25	Bending and compression	ok
6	0.75	5.50	4.13	Compression	ng
8	1.50	5.50	8.25	Tension	ok

Uplift Loads

Member #	Cross section b (in)	h (in)	A (sqi)	Governing Loads	Conclusion
4	1.50	5.50	8.25	Bending and Tension	ok
6	0.75	5.50	4.13	Tension	ok
8	0.75	5.50	4.13	Compression	ng

Software licensed to Halcrow	Job No ?	Sheet No 1	Rev
	Part ROOF TRUSS B-4		
Job Title ROOF TRUSS B-4	Ref 1		
	By YB	Date 08/11/12	Chd
Client	File 6 - Truss B - 4.std	Date/Time 14-Aug-2012 08:58	

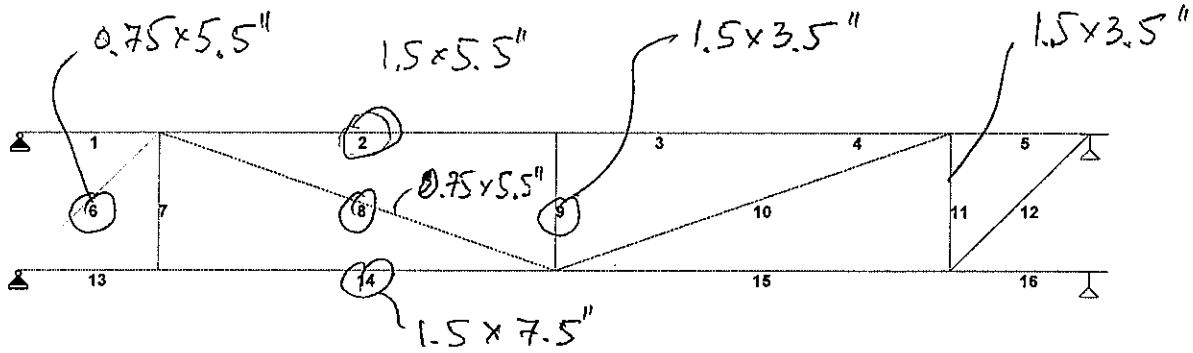

Load 1

Software licensed to Halcrow	Job No ?	Sheet No 1	Rev
	Part ROOF TRUSS B-4		
Job Title ROOF TRUSS B-4	Ref 1		
	By YB	Date 08/11/12	Chd
Client	File 6 - Truss B - 4.std	Date/Time 14-Aug-2012 08:58	

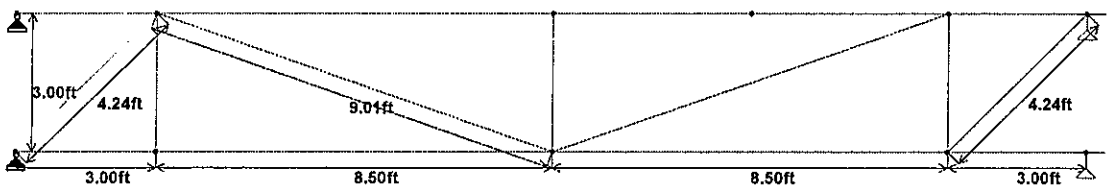

Load 1

Truss B - 4

Gravity Loads

Software licensed to Halcrow	Job No ?	Sheet No 1	Rev
	Part ROOF TRUSS B-4		
Job Title ROOF TRUSS B-4	Ref 1		
	By YB	Date 08/11/12	Chd
Client	File 6 - Truss B - 4.std	Date/Time 14-Aug-2012 08:58	

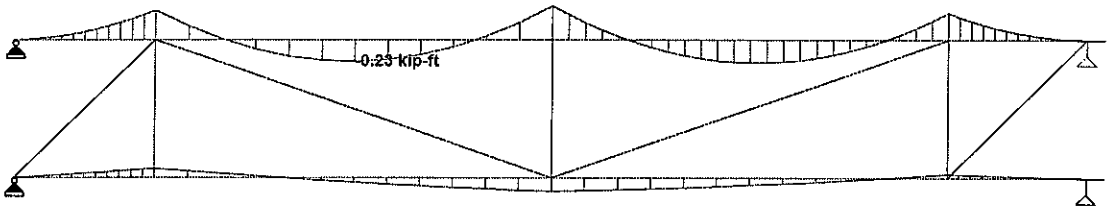

Y
Z X

Load 101 : Bending Z
Moment - kip-ft

Software licensed to Halcrow	Job No ?	Sheet No 1	Rev
	Part ROOF TRUSS B-4		
Job Title ROOF TRUSS B-4	Ref 1		
	By YB	Date 08/11/12	Chd
Client	File 6 - Truss B - 4.std	Date/Time 14-Aug-2012 08:58	

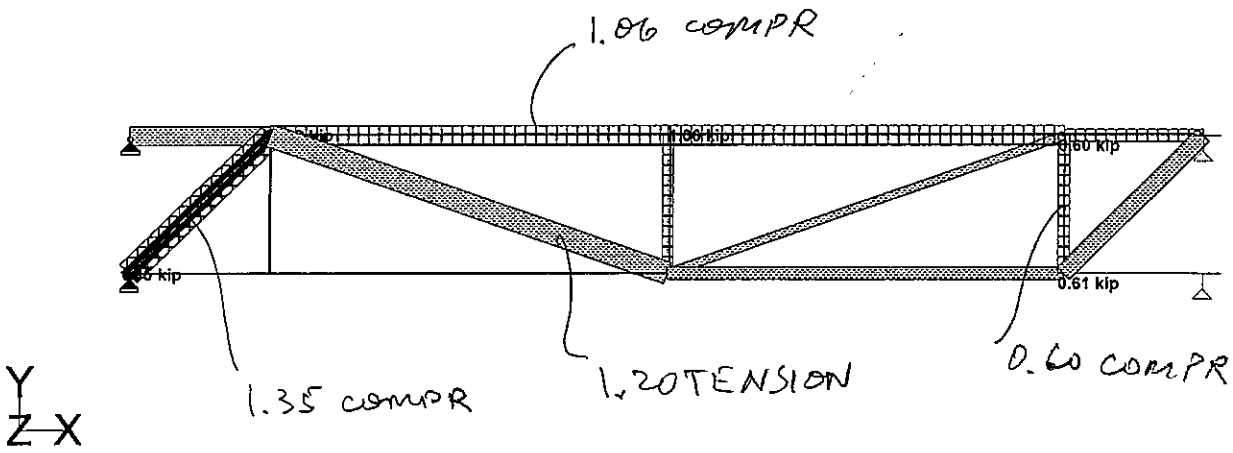

Load 101 : Axial Force
Force - kip

Bending and Compression member 2

All design procedures will be done according to
*The National Design Specification for Wood Construction (**NDS**)* 2005, (parag. 3.9.2)

Species: Southern Pine, grade No 2
Nominal Sizes: D1 = 6 in
D2 = 2 in
Dressed Sizes: d1 = 5.50 in
b = d2 = 1.50 in
Dressed Sizes: Table 1B, p.14 Supplement
Classification: Visually Graded

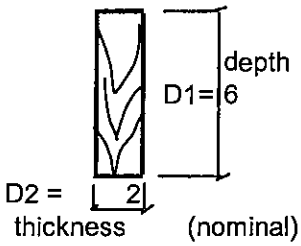

Cross section area **A =** 5.50 × 1.50 = **8.25** sqi

Dimension lumber –
NDS 4.1.3.2

refers to lumber from 2" to 4" (nominal) thick,
and 2" (nominal) or more width

Design values:

"Reference Design Value", Tables 4B, NDS **Supplement**

Fb =	1250	psi	bending
Ft =	725	psi	tension parallel to grain
Fv =	175	psi	shear parallel to grain
Fcp =	565	psi	compression perpendicular to grain
Fc =	1600	psi	compression parallel to grain
E =	1600000	psi	modulus of elasticity
Emin =	580000	psi	modulus of elasticity (min)

Emin' = 580000 psi

Adjustment Factors

(for normal building environmental, see Manual, p. 13)

C_D =	1.60	load duration factor (wind) see Table 2.3.2 p.9
C_F =	1.00	size factor (for Southern Pine already included in tabulated values, see p. 37)
Cr =	1.00	repetitive member factor, p. 28
C_L =		beam stability factor (calculated below)
C_P =		column stability factor (calculated below)

Beam Stability Factor, C_L (see 3.3.3, p.13)

Member unsupported length $Lu = 2.0$ ft = 24 in $d1 = 5.50$ in

$Lu/d1 = 24 / 5.50 = 4.4$

If $\boxed{Lu/d1 \geq 7}$ Use the following Eq.:

Member effective length: $Le = 1.63 \times Lu + 3 \times d1$

$Le = 1.63 \times 24 + 3 \times 5.50 = 56$ in

If $\boxed{Lu/d1 < 7}$ Use the following Eq.:

$Le = 2.06 \times Lu = 2.06 \times 24 = 49$ in

Use: $Le = 49$ in

Slenderness ratio: $R_B = \sqrt{Le \times d1 / b^2} = \sqrt{56 \times 5.50 / 2.25} = 11.7$

$R_B = 11.7 < 50$ **ok!**

$(R_B)^2 = 136$

Fb^* – reference bending design value multiplied by all adjustment factors, except C_L

$Fb^* = Fb \times C_D \times C_F \times Cr =$

$= 1250 \times 1.60 \times 1.00 \times 1.00 =$ **2000** psi

$F_{bE} = 1.20 \times Emin' / R_B^2 = 1.20 \times 580000 / 136 = 5119$

$a = F_{bE} / Fb^* = 5119 / 2000 = 2.56$

$b = (1 + a) / 1.9 = (1 + 2.56) / 1.9 = 1.87$

$C_L = b - \sqrt{b^2 - a / 0.95} =$

$C_L = 1.87 - \sqrt{3.51 - 2.56 / 0.95} =$ **0.97**

$Fb' =$ $Fb^* \times C_L = 2000 \times 0.97 =$ **1941** psi

Column stability factor Cp

(see 3.7 - p.19)

F*c — reference compression design value multiplied by all adjustment factors, except **Cp**

$F^*c = Fc \times C_D \times C_F$

$F^*c = 1600 \times 1.60 \times 1.00 = \mathbf{2560}$ psi

Unbraced length of the compressed member L = 24 in (defined above)

(pinned - pinned) Ke = 1.00 effective length coefficient, See Appendix G, p.156

$Le = Ke \times L = 1.00 \times 24 = 24$ in

Re - the slenderness ratio, for columns with rectangular cross section shall be taken as the larger of the ratios Lx/d1 or Lz/d2

$Re = Le / d2 = 24 / 1.50 = 16.0 < 50$ **ok!**

F*c = **2560** psi (see calculations above)

$$F_{cE} = \frac{K \times Emin'}{(Re)^2} = \frac{0.822 \times 580000}{16.0 \times 16.0} = 1862$$

$$k1 = F_{cE} / F^*c = 1862 / 2560 = 0.73$$

c = 0.80 — for sawn lumber

$$k2 = \frac{1 + k1}{2c} = \frac{1 + 0.73}{2 \times 0.80} = 1.08$$

$$k3 = k2^2 = 1.08 \times 1.08 = 1.17$$

$$Cp = k2 - \sqrt{k3 - k1 / c}$$

$$\mathbf{Cp} = 1.08 - \sqrt{1.17 - 0.73 / 0.80} = \mathbf{0.573}$$

Corrected value **Fc' =** $2560 \times 0.573 =$ **1468** psi

Check Stresses

a) Bending (bending load applied to narrow face of member)

Bending Moment in member $M = 0.23$ k-ft $= 2760$ p - in (see STAAD)

Modulus of inertia $I = \frac{d2 \times d1^3}{12} = \frac{1.50 \times 5.50 \times 5.50 \times 5.50}{12} =$ **21** in^4

Section modulus $S = \frac{d2 \times d1^2}{6} = \frac{1.50 \times 5.50 \times 5.50}{6} =$ **7.6** in^3

Actual bending Stress $f_{b1} = M / S = 2760 / 7.6 = 365$ psi

$f_{b1} < F_{bE} = 1.20 \times Emin' / (R_B)^2$

$F_{bE} = 1.20 \times 580000 / 136 = 5119$ psi

Use: $f_{b1} = 365$ psi

b) Compression

Compression in member $P = 1.06$ k $= 1060$ lb (see STAAD)

Actual compression Stress $fc = P / A = 1060 / 8.3 = \mathbf{128}$ psi

Le1 = Le = 24 in d2 = 1.5 in

Le1 / d2 = 24 / 1.5 = 16.0 (Le1 / d2)^2 = 256

$f_c < F_{cE1} = 0.82 \times Emin' / (Le1 / d2)^2$

$F_{cE1} = 0.82 \times 580000 / 256.0 = 1862$ psi

Use: **fc** = 128 psi

Member subjected to a combination of bending and compression shall be proportioned that:

$$\boxed{\left(\frac{fc}{Fc'}\right)^2 + \frac{f_{b1}}{F_{b1}' \left(1 - (fc / F_{cE1})\right)} < 1}$$ (see 3.9.2)

fc / Fc' = 128 / 1468 = 0.09 0.09 ^2 = 0.01

$f_{b1} = 365$ psi

$F_{b1}' = Fb' = 1941$ psi

$(1 - fc / F_{cE1}) = 1 - 128 / 1862 = 0.93$

$$\frac{f_{b1}}{F_{b1}' (1 - fc / F_{cE1})} = \frac{365}{1941 \times 0.93} = 0.20$$

0.01 + 0.20 = 0.21 < 1.00 **ok!**

Compression member 6

All design procedures will be done according to
*The National Design Specification for Wood Construction (**NDS**)* 2005

Species: Southern Pine, grade 2
Nominal Sizes: D1 = 6.0 in
D2 = 1.0 in
Dressed Sizes: d1 = 5.50 in
d2 = 0.75 in
Dressed Sizes: Table 1B, p.14 Supplement, Section Properties
Classification: Visually Graded

D1= 6.0
D2 = 1.0 (nominal)

Cross section Area A = 5.50 × 0.75 = **4.13** In^2

Dimension lumber –
NDS 4.1.3.2

refers to lumber from 2" to 4" (nominal) thick,
and 2" (nominal) or more width

Design values: "Reference Design Value", Table 4B, NDS **Supplement**

Fc = 1600 psi compression parallel to grain

E = 1600000 psi modulus of elasticity

Emin = 580000 psi modulus of elasticity (min)

Adjustment Factors

(for normal building environmental, see Manual, p. 13)

C_D = 1.60 load duration factor (wind) see Table 2.3.2 p.9

C_F = 1.00 size factor, for Southern Pine already incorporated I tabulated values (see p. 37)

C_p = column stability factor (calculated below)

F*c - tabulated compression design value multiplied by all adjustment factors, except **Cp**

F*c = Fb × C_D × C_F =

= 1600 × 1.60 × 1.00 = **2560** psi

Emin' = Emin = 580000 psi

Calculation of column stability factor Cp (see 3.7 - p.19)

Unbraced length of the compressed member L = 51 in = 4.24 ft

(pinned - pinned) Ke = 1.00 effective length coefficient, See Appendix G, p.156

Le = Ke × L = 1.00 x 51 = 51 in

Re - the slenderness ratio, for columns with rectangular cross section shall be taken as the larger of the ratios Lx/d1 or Lz/d2

Re = Le / d2 = 51 / 0.75 = 68 > 50 ng!

F*c = **2560** psi (see calculations above)

$$F_{cE} = \frac{K \times Emin'}{(Re)^2} = \frac{0.822 \times 580000}{68 \times 68} = 104$$

k1 = F_{cE} / F*c = 104 / 2560 = 0.04

c = 0.80 – for sawn lumber

$$k2 = \frac{1 + k1}{2c} = \frac{1 + 0.04}{2 \times 0.80} = 0.65$$

k3 =k2 ^ 2 = 0.65 × 0.65 = 0.42

$$Cp = k2 - \sqrt{k3 - k1 / c}$$

$$\mathbf{Cp} = 0.65 - \sqrt{0.42 - 0.04 / 0.80} = \mathbf{0.040}$$

Corrected value Fc' = 2560 × 0.040 = **103** psi

Allowable compression force P = A × Fc' = 4.13 × 103 = 424 p

Compression in considered member P = 1.35 k (see STAAD)

P = 0.42 k < 1.35 k ng!

Truss B - 4

Uplift Loads

Software licensed to Halcrow	Job No ?	Sheet No 1	Rev
	Part ROOF TRUSS B-4		
Job Title ROOF TRUSS B-4	Ref 1		
	By YB	Date 08/11/12	Chd
Client	File 6 - Truss B - 4.std	Date/Time 14-Aug-2012 08:58	

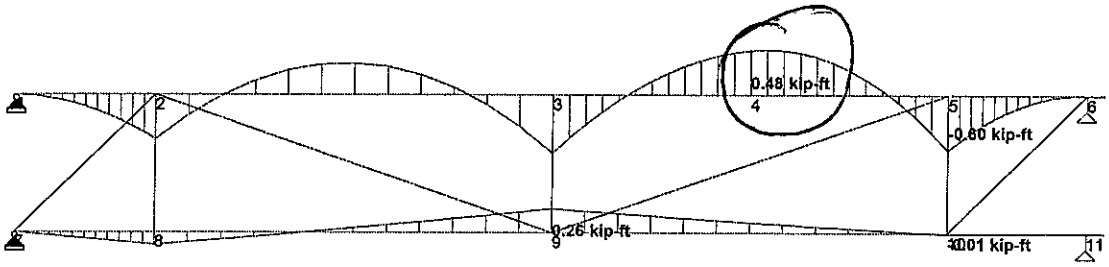

Load 104 : Bending Z
Moment - kip-ft

Software licensed to Halcrow	Job No ?	Sheet No 1	Rev
	Part ROOF TRUSS B-4		
Job Title ROOF TRUSS B-4	Ref 1		
	By YB	Date 08/11/12	Chd
Client	File 6 - Truss B - 4.std	Date/Time 14-Aug-2012 08:58	

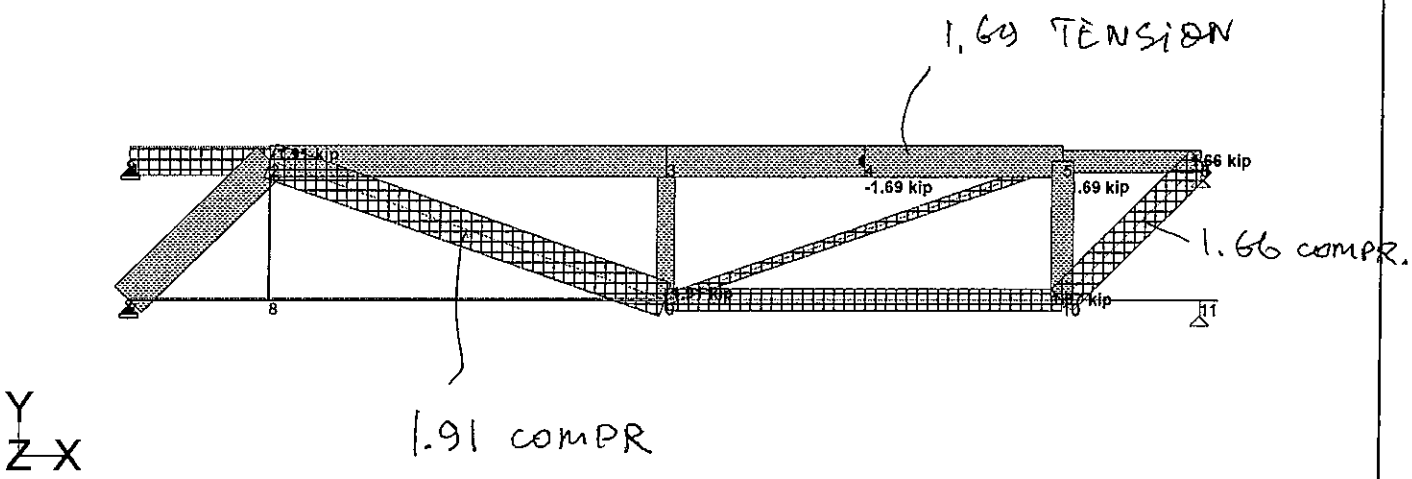

Load 104 : Axial Force
Force - kip

Bending and Tension Member 4

All design procedures will be done according to
*The National Design Specification for Wood Construction (**NDS**)* 2005

Species: Southern Pine, grade No 2
Nominal Sizes: B = 2 in
D = 6 in
Dressed Sizes: b = 1.50 in
d = 5.50 in
Dressed Sizes: Table 1B, p.14 Supplement
Classification: Visually Graded

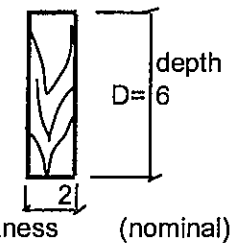

Cross section Area A = 1.50 × 5.50 = **8.25** sqi

Dimension lumber – refers to lumber from 2" to 4" (nominal) thick,
NDS 4.1.3.2 and 2" (nominal) or more width

Design values: "Reference Design Value", Tables 4B, NDS **Supplement**

Fb =	1250	psi	bending
Ft =	725	psi	tension parallel to grain
Fv =	175	psi	shear parallel to grain
Fcp =	565	psi	compression perpendicular to grain
Fc =	1600	psi	compression parallel to grain
E =	1600000	psi	modulus of elasticity
Emin =	580000	psi	modulus of elasticity (min)
Emin' =	580000	psi	

Adjustment Factors

(for normal building environmental, see Manual, p. 13)

C_D = 1.60 load duration factor (wind) see Table 2.3.2 p.9

C_F = 1.00 size factor (for Southern Pine already included in tabulated values; p. 37)

Cr = 1.00 repetitive member factor, p. 28

C_L = 1.00 beam stability factor (not considered for this case, see 3.9.1)

Fb*= Fb × C_D × C_F × Cr × C_L =

= 1250 × 1.60 × 1.00 × 1.00 × 1.00 = **2000** psi

Ft'= Ft × C_D × C_F =

= 725 × 1.60 × 1.00 = **1160** psi

Check Stresses

a) Bending

Bending Moment in the member M = 0.48 k-ft = 5760 p - in (see STAAD)

Modulus of inertia $I = \frac{b \times d^3}{12} = \frac{1.5 \times 5.50 \times 5.50 \times 5.50}{12} =$ **20.8** in^4

Section modulus $S = \frac{b \times d^2}{6} = \frac{1.5 \times 5.50 \times 5.50}{6} =$ **7.6** in^3

Actual bending stress fb = M / S = 5760 / 7.6 = 762 psi

b) Tension

Tension in the member T = 1.69 k = 1690 lb (see STAAD)

Actual tension stress ft = T / A = 1690 / 8.3 = 205 psi

Member subjected to a combination of bending and tension shall be so proportioned that:

$$\boxed{\frac{ft}{Ft'} + \frac{fb}{Fb^*} < 1} \qquad \frac{205}{1160} + \frac{762}{2000} = 0.18 + 0.38 = 0.56 \quad \textbf{ok!}$$

Halcrow
A CH2M HILL COMPANY

PROJECT	Glynn Archer School, Florida	SHEET NO ____ OF ____	
SUBJECT	Roof Truss Structural assessment — Uplift	JOB NO	
	Compression member — 8 — Truss B -4	MADE	YB 16-Aug-12
		CHKD	

Compression member 8

All design procedures will be done according to
*The National Design Specification for Wood Construction (**NDS**)* 2005

Species: Southern Pine, grade 2
Nominal Sizes: D1 = 6.0 in
D2 = 1.0 in
Dressed Sizes: d1 = 5.50 in
d2 = 0.75 in
Dressed Sizes: Table 1B, p.14 Supplement, Section Properties
Classification: Visually Graded

D1= 6.0
D2 = 1.0 (nominal)

Cross section Area A = 5.50 × 0.75 = **4.13** in^2

Dimension lumber – refers to lumber from 2" to 4" (nominal) thick,
NDS 4.1.3.2 and 2" (nominal) or more width

Design values: "Reference Design Value", Table 4B, NDS **Supplement**

Fc = 1600 psi compression parallel to grain

E = 1600000 psi modulus of elasticity

Emin = 580000 psi modulus of elasticity (min)

Adjustment Factors

(for normal building environmental, see Manual, p. 13)

C_D = 1.60 load duration factor (wind) see Table 2.3.2 p.9

C_F = 1.00 size factor for Southern Pine already incorporated in tabulated values (see p. 37)

C_p = column stability factor (calculated below)

F*c - tabulated compression design value multiplied by all adjustment factors, except **Cp**

F*c = Fb × C_D × C_F =

= 1600 × 1.60 × 1.00 = **2560** psi

Emin' = Emin = 580000 psi

Calculation of column stability factor Cp (see 3.7 - p.19)

Unbraced length of the compressed member L = 108 in = 9.0 ft

(pinned - pinned) Ke = 1.00 effective length coefficient, See Appendix G, p.156

Le = Ke × L = 1.00 x 108 = 108 in

Re - the slenderness ratio, for columns with rectangular cross section shall be taken as the larger of the ratios Lx/d1 or Lz/d2

Re = Le / d2 = 108.12 / 0.75 = 144 > 50 ngl

F*c = **2560** psi (see calculations above)

$$F_{cE} = \frac{K \times Emin'}{(Re)^2} = \frac{0.822 \times 580000}{144 \times 144} = 23$$

k1 = F_{cE} / F*c = 23 / 2560 = 0.01

c = 0.80 - for sawn lumber

$$k2 = \frac{1 + k1}{2c} = \frac{1 + 0.01}{2 \times 0.80} = 0.63$$

k3 = k2 ^ 2 = 0.63 × 0.63 = 0.40

$$Cp = k2 - \sqrt{k3 - k1 / c}$$

$$\mathbf{Cp} = 0.63 - \sqrt{0.40 - 0.01 / 0.80} = \mathbf{0.009}$$

Corrected value Fc' = 2560 × 0.009 = **23** psi

Allowable compression force P = A × Fc' = 4.13 × 23 = 94 p

Compression in considered member P = 1.91 k (see STAAD)

P = 0.09 k < 1.91 k ngl