Appendix A
Plans and Sketches

Plans

ZONING SITE PLAN DATA:

	REQUIRED/ALLOWED	PROVIDED
ZONING DESIGNATION	HPS	
LOT SIZE	1 1/4 ACRES/54,450 SF	132,155 SQ FT
SETBACKS		
FRONT	20'	25' (+/-)
STREET SIDE	10'	20' (+/-)
REAR	20'/15' ALLEY	OVER 200' TO CENTER OF ALLEY
SIDE	5'	OVER 5' (+/-)
MAXIMUM FAR	1.0	0.35
MAXIMUM BUILDING COVER	40% (52,860 SF)	21.8% (28,804 SF)
MAXIMUM IMPERVIOUS SURFACE: (HOTEL TRAIL LANES ARE IMPERVIOUS, SPACES ARE 50% IMPERVIOUS)	50% (66,078 SF)	47.2% (62,400 SF +/-)

PARKING

LOR RATIO: OFFICE USES: 120 / STORAGE, MAINTENANCE USES: 8 / TOTAL: 128 CARS
: AUDITORIUM: 40 SEATS, HOWEVER CODE ALLOWS JOINT USE
TOTAL IF JOINT USE IS NOT RECOGNIZED IS 168 CARS
BICYCLES @ 15% = 64 / OR 84

PROVIDED: (NOTE: PARKING MAY BE REDUCED IN EXCHANGE FOR ADDITIONAL LANDSCAPE)

FULL SIZE SPACES	124
COMPACT SPACES	7
ON STREET, 30 MINUTE TIME LIMIT	6
HANDICAP SPACES	6
TOTAL	196
PLUS (1) LOADING SPACE @ 12' x 50'	
BICYCLES: 1 BOUNTY STORAGE FOR 2 BIKE	65

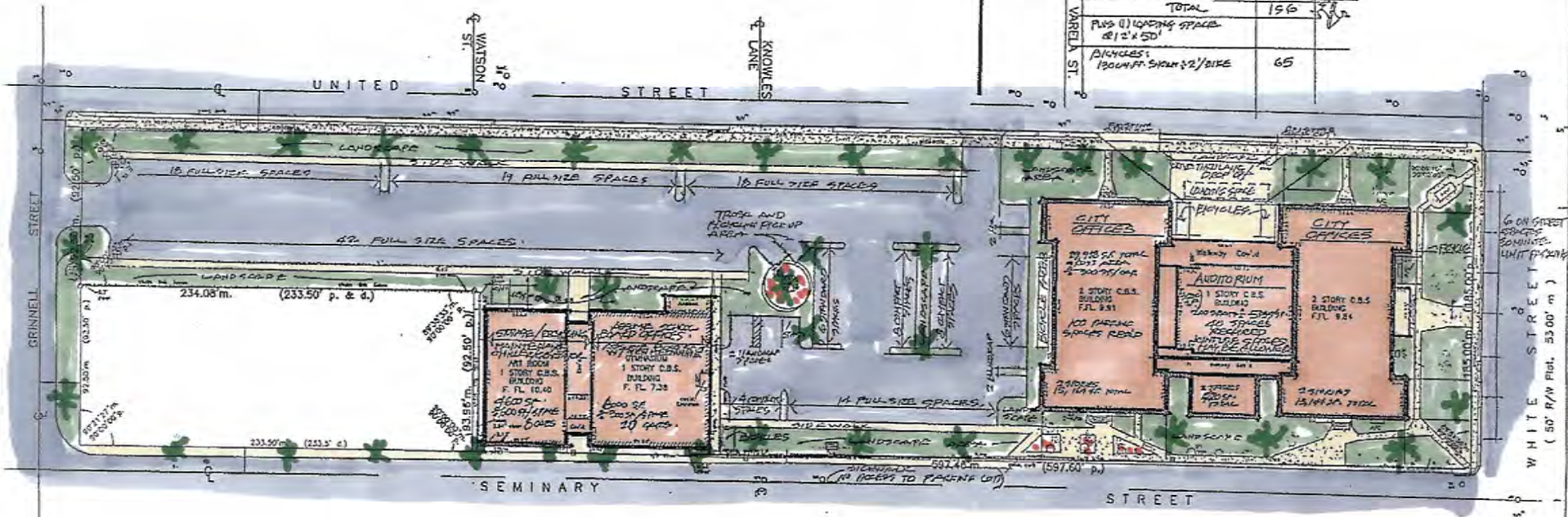

SCHEMATIC SITE PLAN — 1" = 30'

GLYNN ARCHER SCHOOL
WHITE STREET
KEY WEST, FLORIDA

Bender & Associates ARCHITECTS P.A.
410 Angela Street
Key West, Florida 33040
Telephone (305) 296-4224
Facsimile (305) 296-4225
Florida License #AR0009168

Date 5/29/09

OF 30

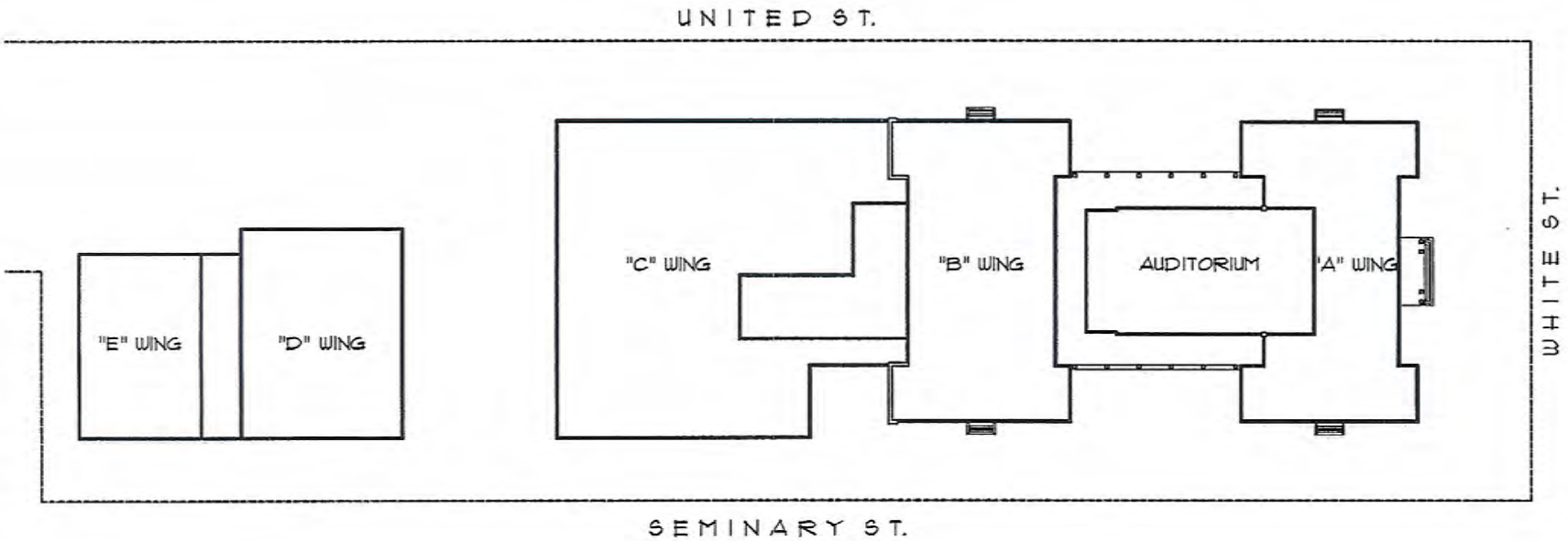

Site Plan

N.T.S.

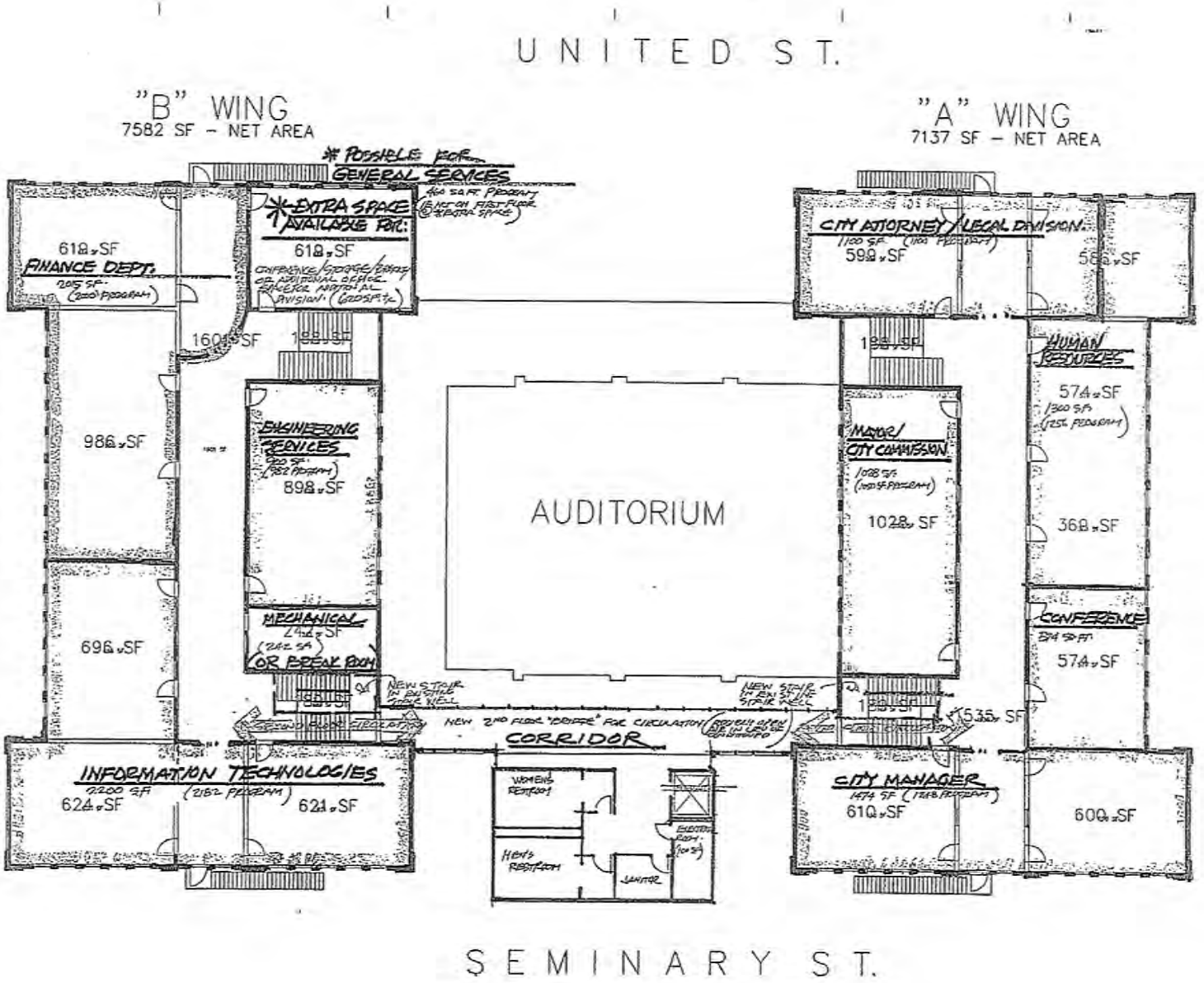

1 / A2 SECOND FLOOR PLAN
SCALE: 1/8"=1'-0"

GLYNN ARCHER SCHOOL
WHITE STREET
KEY WEST FLORIDA 33040

Bender & Associates ARCHITECTS P.A.

A2
2 OF 2

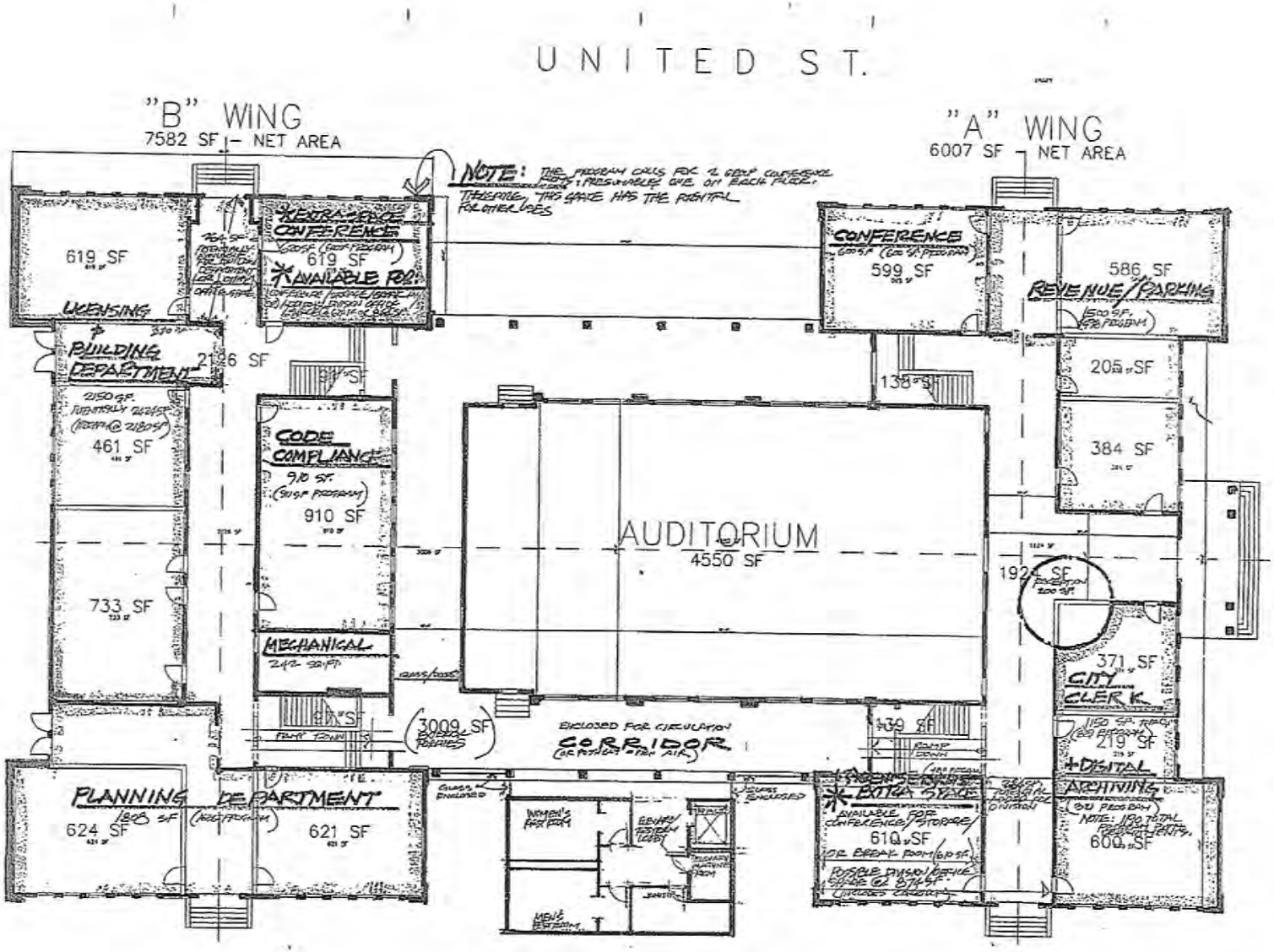

GLYNN ARCHER SCHOOL
WHITE STREET
KEY WEST FLORIDA 33040

Bender & Associates ARCHITECTS

416 Angela Street
Key West, Florida 33040

FIRST FLOOR PLAN

A1
1 OF 2

Sketches

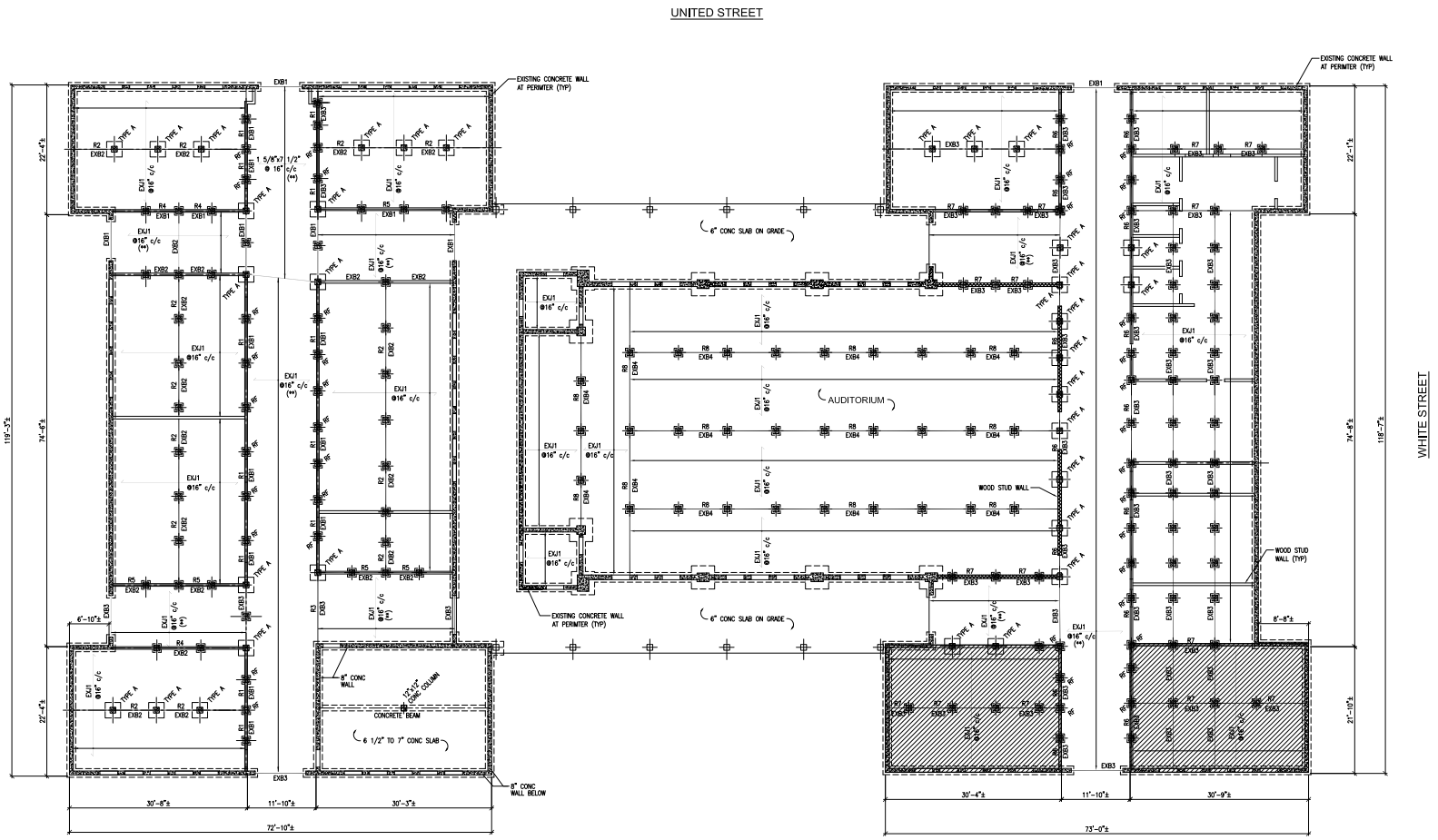

FOUNDATION AND FIRST FLOOR PLAN - A & B WING

1/8"=1'-0"

NORTH

NOTES:

1. TOP OF EXISTING FLOOR SHEATHING APPROXIMATE ELEVATION +3'-0"± IS REFERENCED FROM EXISTING GRADE.
2. THE STRUCTURAL FRAMING LAYOUT IS A GENERAL SURVEY OF THE EXISTING STRUCTURAL MEMBERS, BASED ON SEVERAL OBSERVATION ACCESS HOLES. THE EXACT CONDITIONS, ELEVATIONS, LOCATIONS, AND SIZE OF THE STRUCTURAL MEMBERS MUST BE FIELD DETERMINED FOR THE FINAL DESIGN.
3. THE DIMENSIONS AND ELEVATIONS ARE SHOWN ON THE PLAN FOR REFERENCE, THE EXACT DIMENSIONS AND ELEVATIONS MUST BE FIELD VERIFIED FOR FINAL DESIGN.
4. (**) INDICATES EXISTING WOOD FLOOR JOIST AND ROOF TRUSS / RAFTER REQUIRED REINFORCEMENT.
5. "CB" INDICATES WOOD POST BELOW THE FLOOR FRAMING.
6. UNLESS NOTED OTHERWISE, BEAMS DO NOT REQUIRE ADDITIONAL REINFORCEMENT. NOTATION " R " FOLLOWED BY A NUMBER CORRESPONDS TO REQUIRED BEAM REINFORCEMENT. FOR REINFORCEMENT SCHEDULE AND DETAILS , REFER TO SKETCH SK-10.
7. " RF " INDICATES EXISTING CONCRETE FOOTING WITH ADDITIONAL REINFORCEMENT AND ENLARGED BEARING SURFACE AREA.
8. INTERIOR WALLS CONSIST OF 1 5/8" x 5 1/2" WOOD STUD WALL.

PROVIDE 15/32" THICK PLYWOOD SHEATHING, GRADE DOC PS1 AND PS2 WITH 10d (3x0.131ø) NAILS PENETRATE 1 1/2" INTO FRAMING, SPACED AT 4" c/c PANEL EDGE AND 6" c/c FIELD.

TYPE 'A' - 32"x32" EXISTING CONCRETE FOOTING
ALL OTHER EXISTING FOOTINGS ARE 18"x18"

EXISTNG FLOOR FRAMING SCHEULE	
MARK	EXISTING MEMBER SIZES
EXB1	4-1 5/8"x7 1/2"
EXB2	2-1 5/8"x7 1/2"
EXB3	5 1/2"x7 1/2"
EXB4	5 3/4"x5 5/8"
EXJ1	1 5/8" x 7 1/2"

XRefs:
Titleblock.dwg

Plot Time: 2012, Aug 17 - 3:49pm
Drawing Name: \\Vpc-fs-01.amr.ch2m.com\admin\HY-New York\Projects\2012\59571 REDAAV Glynn Archer School, Key West, FL\7 Drawings\7 Drawings CAD MS200.00_Foundation and First Floor Framing Plan.dwg

REV. #	DATE	DESCRIPTION

PROJECT

GLYNN ARCHER SCHOOL
1300 WHITE STREET
KEY WEST - FLORIDA

Halcrow Yolles
22 Courtlandt Street
31st Floor New York, NY 10007
tel +1 212 608 3860
contactus@halcrowyolles.com
halcrowyolles.com

Halcrow Yolles

© 2012 Halcrow Yolles. Not to be returned upon request. Reproduction of these drawings, specifications, related documents and designs in whole or in part is strictly forbidden without the prior written permission of Halcrow Yolles.

SHEET TITLE

FOUNDATION / FIRST FLOOR FRAMING PLAN

PROJ. MANAGER: PDS
ARCHITECT/ENGINEER: ALC/MIA
DRAWN BY: DCB
PROJECT NO.
DWG. NO.: S-200

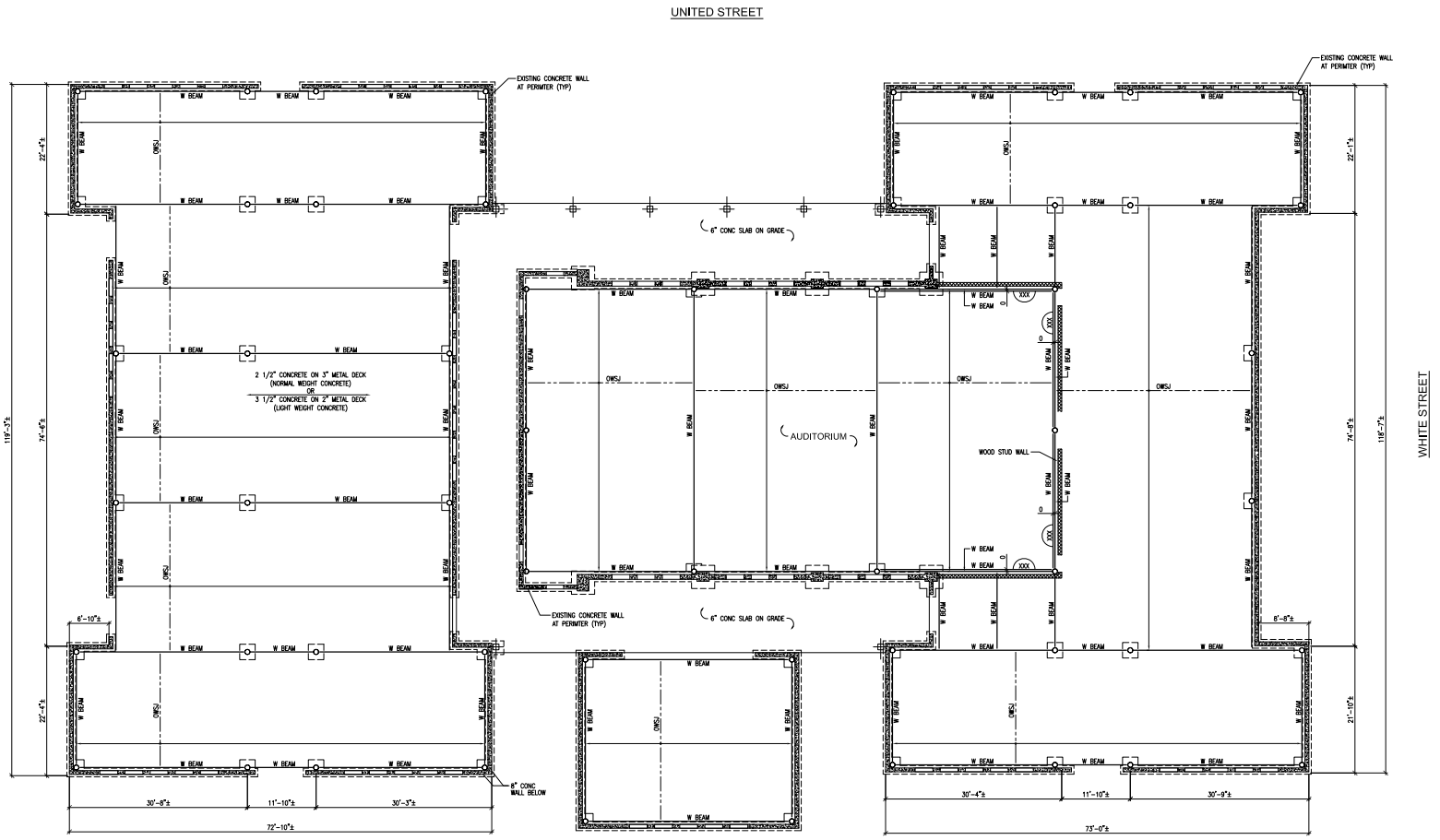

ALTERNATE FIRST FLOOR FRAMING PLAN - BLUE SKY APPROACH
1/8"=1'-0"

NORTH

NOTES:

1. LATERAL: MOMENT FRAMES OR
   "X"-BRACING ON PERIMETER OR
   "V" OR "Λ" BRACING ON PERIMETER
2. TEMPORARY ACCESS FOR DRILL RIGS TO BE PLANNED.
3. ACP'S CAN BE PULLED PROUD OF WALLS WITH GB SYSTEM.
4. 54 PILE LOCATIONS HAVE BEEN SHOWN. A MODIFIED FRAMING PLAN CAN REDUCE THE NUMBER OF PILES REQUIRED TO 46 PILE LOCATIONS.
5. OWSJ INDICATES OPEN WEB STEEL JOIST.

XRefs:
Titleblock.dwg

Plot Time: 2012, Aug 28 - 3:48pm
Drawing Name: \\vyc-fs-01\Admin\NY-New York\Projects\2012\59571 REDAAV Glynn Archer School, Key West, FL\7 Drawings\7 Drawings CAD Mtrc Info\Sheet\S200A.00_Foundation and First Floor Framing Plan.dwg

REV. #	DATE	DESCRIPTION

PROJECT

GLYNN ARCHER SCHOOL
1300 WHITE STREET
KEY WEST - FLORIDA

Halcrow Yolles
22 Courtland Street
31st Floor New York, NY 10007
tel +1 212 608 3990
contact.us@halcrowyolles.com
halcrowyolles.com

Halcrow Yolles

© 2012 Halcrow Yolles. Must be returned upon request. "Reproduction of these drawings, specifications, related documents and designs in whole or in part is strictly forbidden without the prior written permission of Halcrow Yolles."

SHEET TITLE

ALTERNATE FIRST FLOOR FRAMING PLAN - BLUE SKY APPROACH

PROJ. MANAGER: PDS
ARCHITECT/ENGINEER: ALC/MIA
DRAWN BY: DCB
PROJECT NO.
DWG. NO.: S-200A

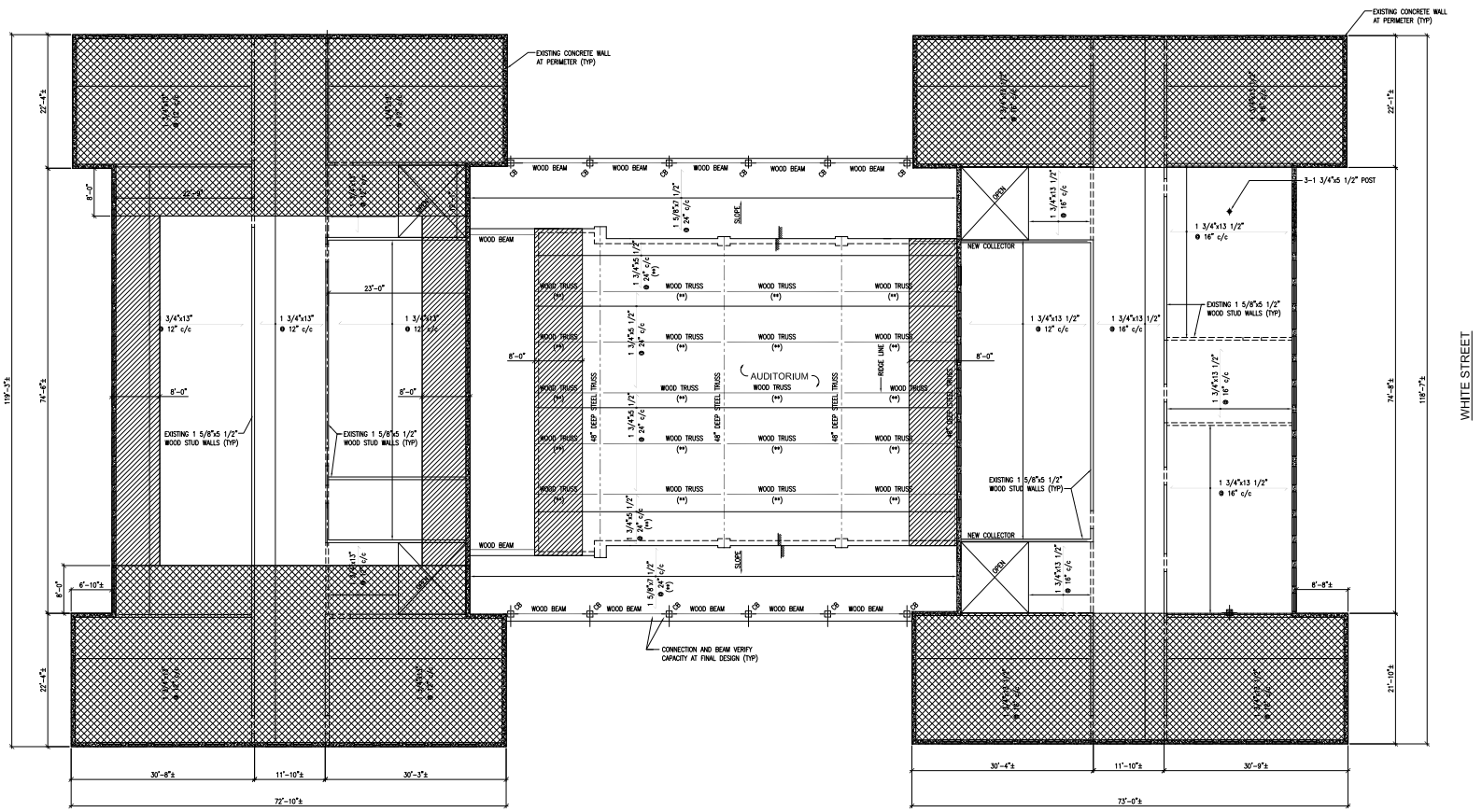

" B " WING

SEMINART STREET

" A " WING

SECOND FLOOR FRAMING PLAN - A & B WING

1/8"=1'-0"

NORTH

NOTES:

1. TOP OF EXISTING FLOOR SHEATHING APPROXIMATE ELEVATION +17'-1 3/4"± IS REFERENCED FROM EXISTING GRADE.
2. THE STRUCTURAL FRAMING LAYOUT IS A GENERAL SURVEY OF THE EXISTING STRUCTURAL MEMBERS, BASED ON SEVERAL OBSERVATION ACCESS HOLES. THE EXACT CONDITIONS, ELEVATIONS, LOCATIONS, AND SIZE OF THE STRUCTURAL MEMBERS MUST BE FIELD DETERMINED FOR THE FINAL DESIGN.
3. THE DIMENSIONS AND ELEVATIONS ARE SHOWN ON THE PLAN FOR REFERENCE, THE EXACT DIMENSIONS AND ELEVATIONS MUST BE FIELD VERIFIED FOR FINAL DESIGN.
4. (**) INDICATES EXISTING WOOD FLOOR JOIST AND ROOF TRUSS / RAFTER REQUIRED REINFORCEMENT.
5. "CB" INDICATES WOOD POST BELOW THE FLOOR FRAMING.

PROVIDE 15/32" THICK PLYWOOD SHEATHING, GRADE DOC PS1 AND PS2 WITH 10d (3x0.131ø) NAILS PENETRATE 1 1/2" INTO FRAMING, SPACED AT 4" c/c PANEL EDGE AND 6" c/c FIELD.

PROVIDE 15/32" THICK PLYWOOD SHEATHING, GRADE DOC PS1 AND PS2 WITH 10d (3x0.131ø) NAILS PENETRATE 1 1/2" INTO FRAMING, SPACED AT 2 1/2" c/c PANEL EDGE AND 4" c/c FIELD.

REV. #	DATE	DESCRIPTION

PROJECT

GLYNN ARCHER SCHOOL
1300 WHITE STREET
KEY WEST - FLORIDA

Halcrow Yolles
22 Courtland Street
31st Floor New York, NY 10007
tel +1 212 608 3960
contact us@halcrowyolles.com
halcrowyolles.com

© 2012 Halcrow Yolles. Must be returned upon request. "Reproduction of these drawings, specifications, related documents and designs in whole or in part is strictly forbidden without the prior written permission of Halcrow Yolles."

SHEET TITLE

SECOND FLOOR FRAMING PLAN

PROJ. MANAGER: PDS

ARCHITECT/ENGINEER: ALC/MIA

DRAWN BY: DCB

PROJECT NO.

DWG. NO.: S-201

XRefs:
Titleblock.dwg

Plot Time: 2012, Aug 17 - 3:42pm
Drawing Name: \\Nyc-fs-01.arc.dhm.com\admin\HY-New York\Projects\2012\59071 REDAAV Glynn Archer School, Key West, FL\7 Drawings\7 Drawings CAD MS201.00_Second Floor Framing Plan.dwg

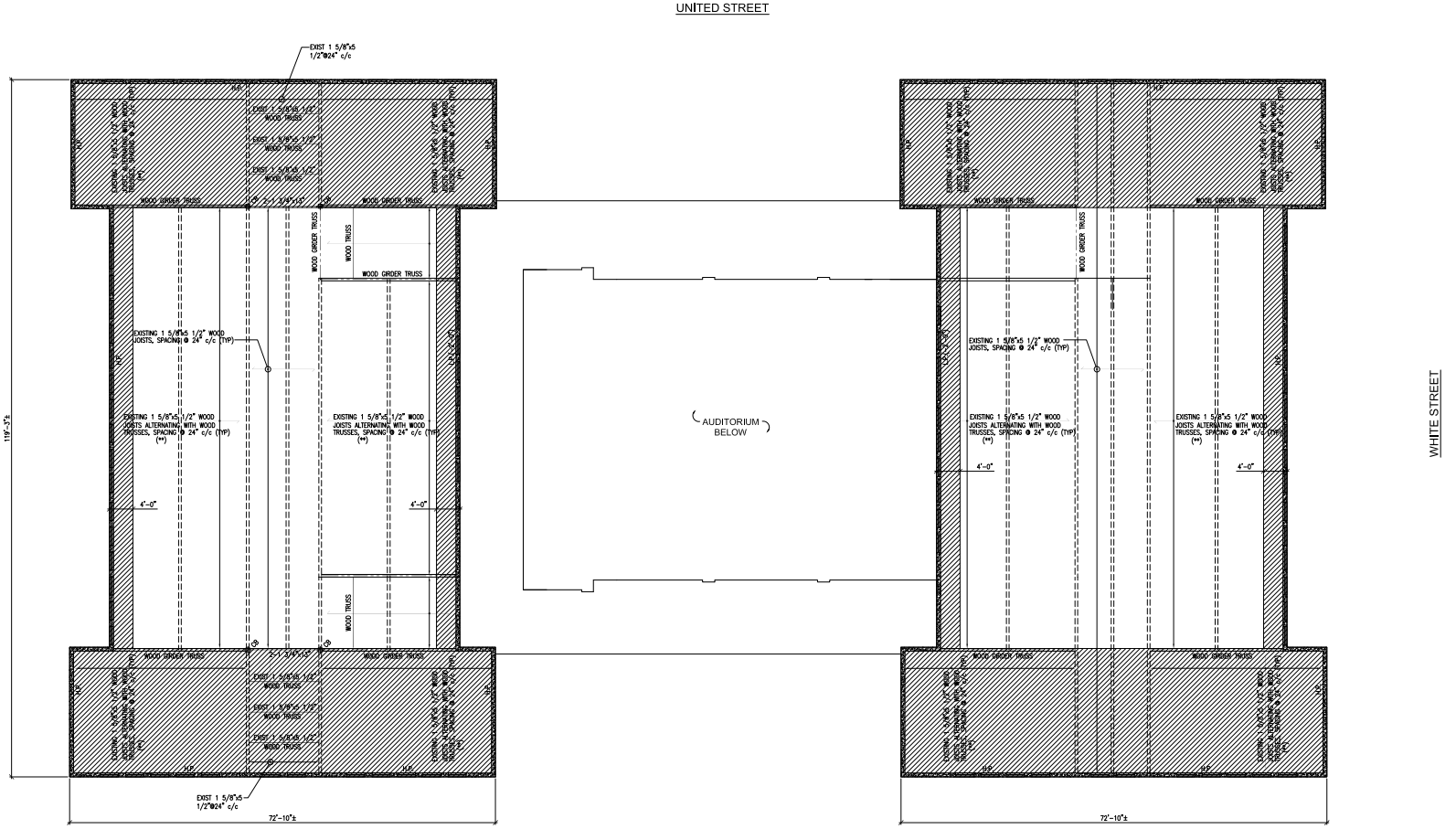

ROOF FRAMING PLAN - A & B WING
1/8"=1'-0"

NORTH

NOTES:

1. TOP OF EXISTING FLOOR SHEATHING APPROXIMATE ELEVATION +33'-3 1/2"± IS REFERENCED FROM EXISTING GRADE, EXCEPT AS NOTED ("-**") TO BE READ FROM ELEVATION +33'-3 1/2"±.
2. THE STRUCTURAL FRAMING LAYOUT IS A GENERAL SURVEY OF THE EXISTING STRUCTURAL MEMBERS, BASED ON SEVERAL OBSERVATION ACCESS HOLES. THE EXACT CONDITIONS, ELEVATIONS, LOCATIONS, AND SIZE OF THE STRUCTURAL MEMBERS MUST BE FIELD DETERMINED FOR THE FINAL DESIGN.
3. THE DIMENSIONS AND ELEVATIONS ARE SHOWN ON THE PLAN FOR REFERENCE, THE EXACT DIMENSIONS AND ELEVATIONS MUST BE FIELD VERIFIED FOR FINAL DESIGN.
4. (**) INDICATES EXISTING WOOD FLOOR JOIST AND ROOF TRUSS / RAFTER REQUIRED REINFORCEMENT.

LEGEND:

=== - INDICATES EXISTING 2x WOOD POSTS AT EACH WOOD TRUSS
CB - INDICATES EXISTING WOOD POST BELOW
H.P. - INDICATES HIGH POINT AT ROOF SURFACE
L.P. - INDICATES LOW POINT AT ROOF SURFACE

EXTENT OF MEMBER
MEMBER SPAN

PROVIDE 15/32" THICK PLYWOOD SHEATHING, GRADE DOC PS1 AND PS2 WITH 10d (3x0.131ø) NAILS PENETRATE 1 1/2" INTO FRAMING, SPACED AT 4" c/c PANEL EDGE AND 6" c/c FIELD.

REV. #	DATE	DESCRIPTION

PROJECT

GLYNN ARCHER SCHOOL
1300 WHITE STREET
KEY WEST - FLORIDA

Halcrow Yolles
22 Cortlandt Street
33rd Floor New York, NY 10007
tel +1 212 608 3860
contact.us@halcrowyolles.com
halcrowyolles.com

Halcrow Yolles

© 2012 Halcrow Yolles. Must be returned upon request. Reproduction of these drawings, specifications, related documents and designs in whole or in part is strictly forbidden unless the prior written permission of Halcrow Yolles.

SHEET TITLE

ROOF FRAMING PLAN

PROJ. MANAGER	PDS
ARCHITECT/ENGINEER	ALC/MIA
DRAWN BY	DCB
PROJECT NO.	
DWG. NO.	S-202

XRefs:
Titleblock.dwg

Plot Time: 2012, Aug 17 - 3:46pm
Drawing Name: \\fpr-ny-cluster.dom.com\admin\NY~New York\Projects\2012\38571 RED\AW Glynn Archer School, Key West, FL\7 Drawings\7 Drawings CAD\ MS202.00_Roof Framing Plan.dwg

Yolles | A CH2M HILL Company

Project: GLYNN ARCHER SCHOOL				Project No.	No. SK-S1
Design: MIA	Drawn: DCB	Checked: PDS	Date: August 2012	W.P. No.	Scale NTS
Subject: EXTERIOR WALL SECTION				Reference	

READ THIS SKETCH IN CONJUNCTION WITH STRUCTURAL DRAWINGS AND OTHER CONTRACT DOCUMENTS

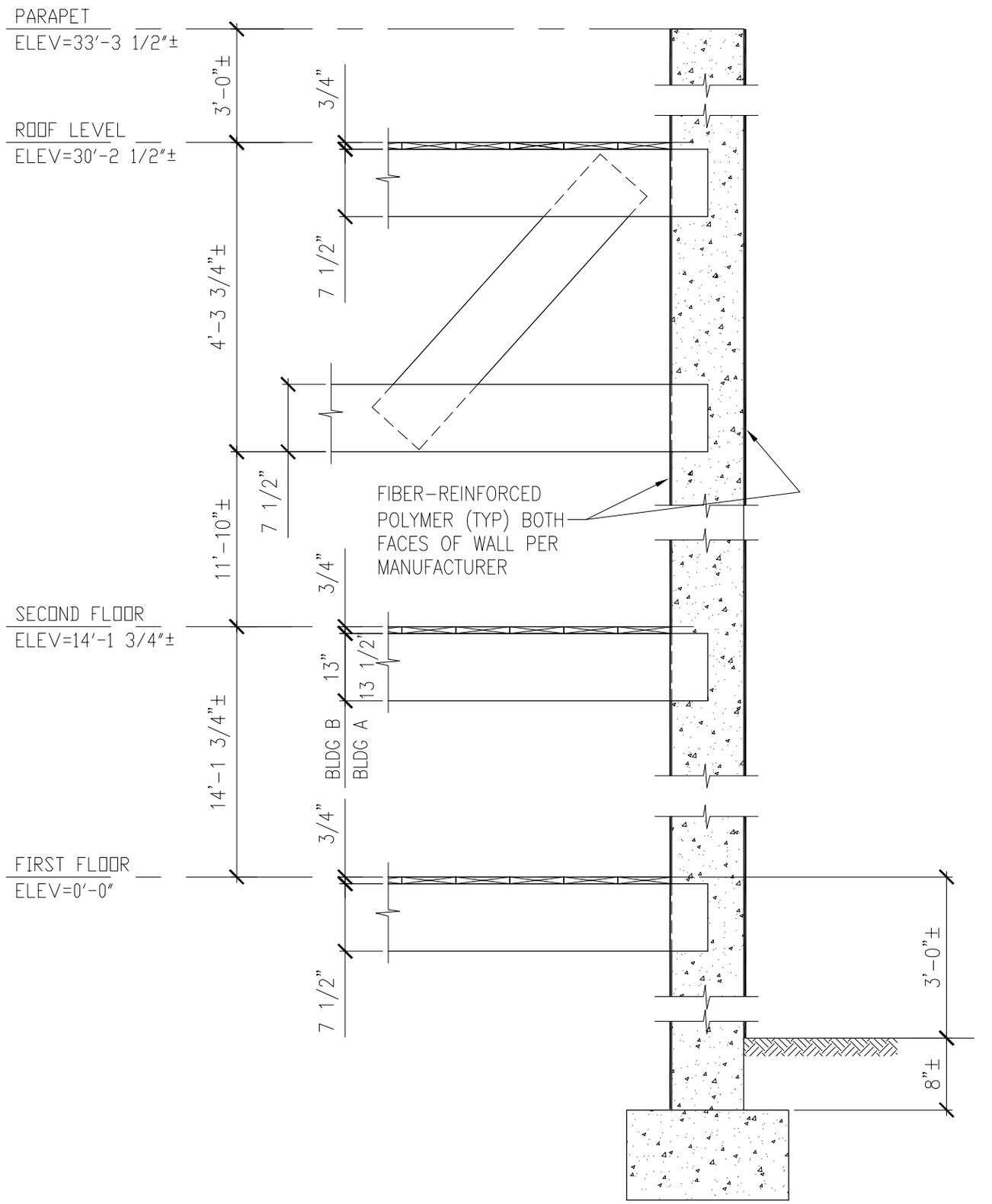

Yolles | A CH2M HILL Company

Project: GLYNN ARCHER SCHOOL				Project No.	No. SK-S2
Design: A.CHAN	Drawn: DCB	Checked: PDS	Date: August 2012	W.P. No.	Scale 3/4"=1'-0"
Subject: WOOD BEAM CONNECTION TO CONCRETE PIER				Reference	

READ THIS SKETCH IN CONJUNCTION WITH STRUCTURAL DRAWINGS AND OTHER CONTRACT DOCUMENTS

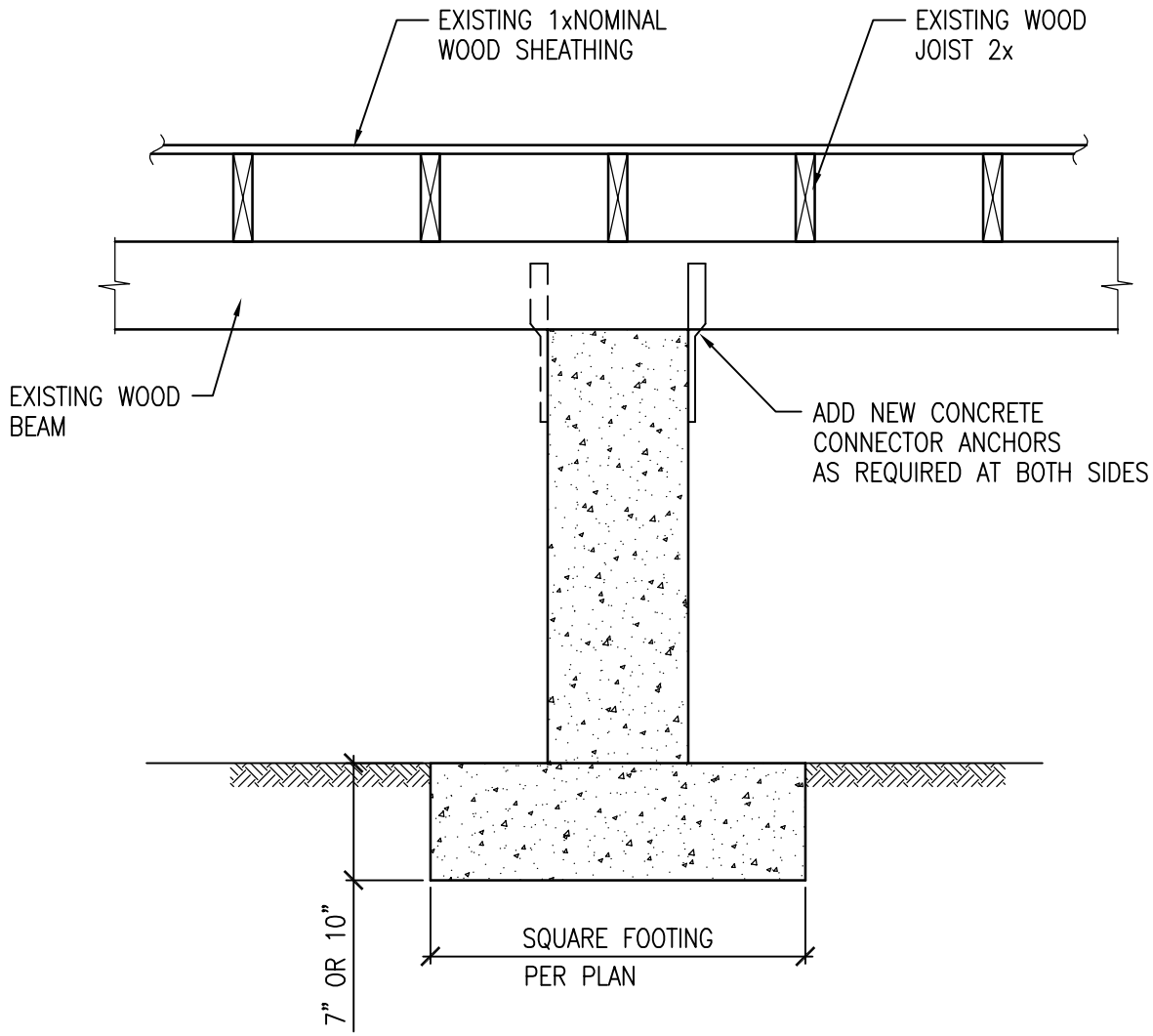

Yolles | A CH2M HILL Company

Project: GLYNN ARCHER SCHOOL				Project No.	No. SK-S3
Design: A.CHAN	Drawn: DCB	Checked: PDS	Date: August 2012	W.P. No.	Scale 3/4"=1'-0"
Subject: FIRST FLOOR - MULTI SPAN JOIST REINFORCEMENT				Reference	

READ THIS SKETCH IN CONJUNCTION WITH STRUCTURAL DRAWINGS AND OTHER CONTRACT DOCUMENTS

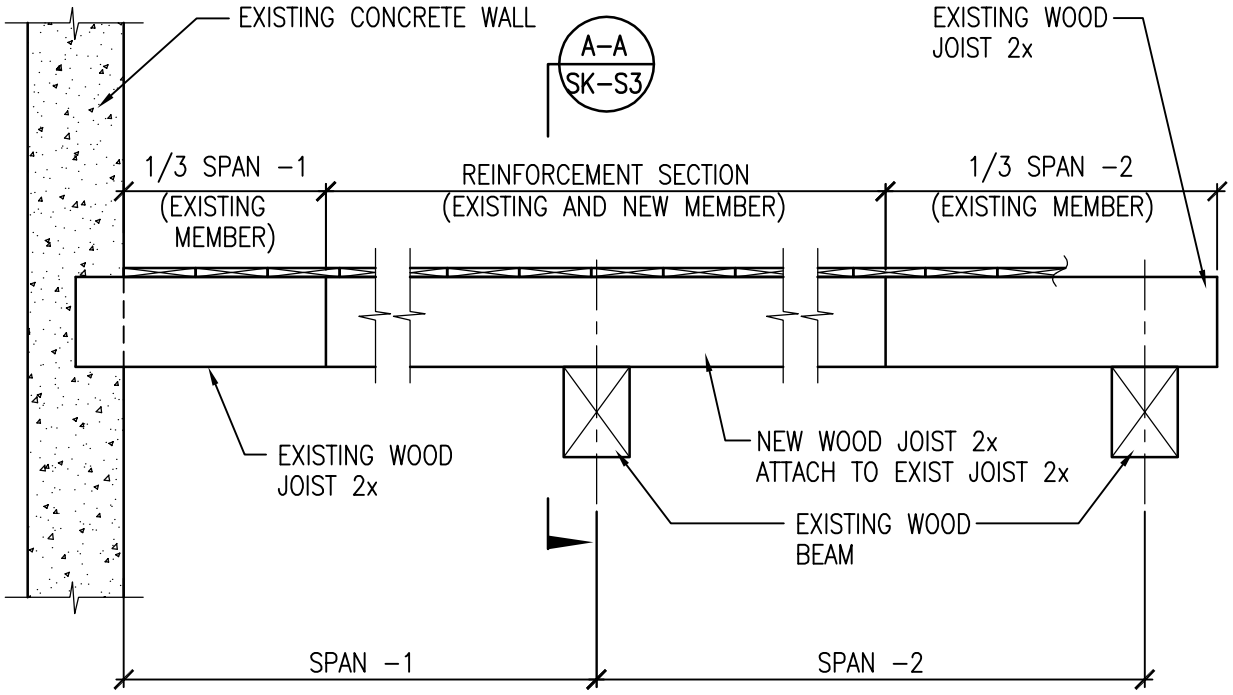

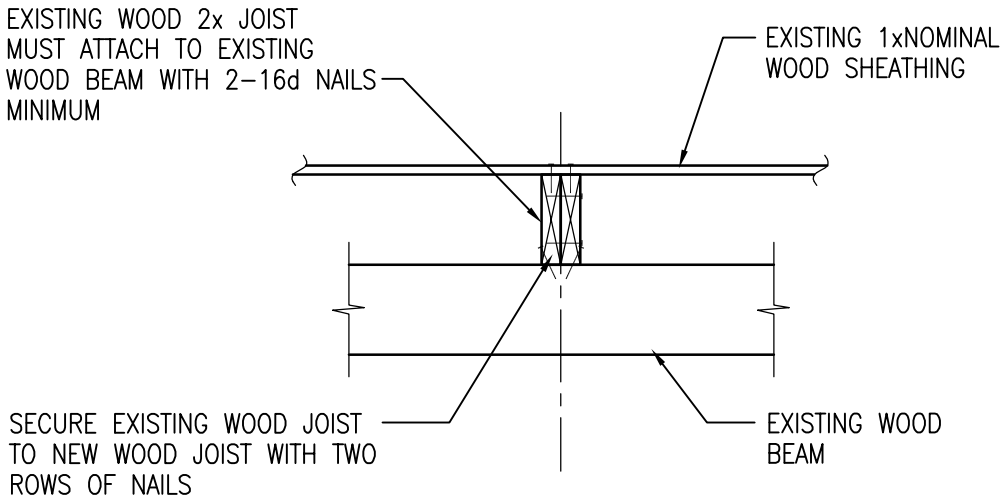

SECTION A-A

Yolles | A CH2M HILL Company

Project: GLYNN ARCHER SCHOOL				Project No.	No. SK-S4
Design: A.CHAN	Drawn: DCB	Checked: PDS	Date: August 2012	W.P. No.	Scale 3/4"=1'-0"
Subject: FIRST FLOOR - SINGLE SPAN JOIST REINFORCEMENT				Reference	

READ THIS SKETCH IN CONJUNCTION WITH STRUCTURAL DRAWINGS AND OTHER CONTRACT DOCUMENTS

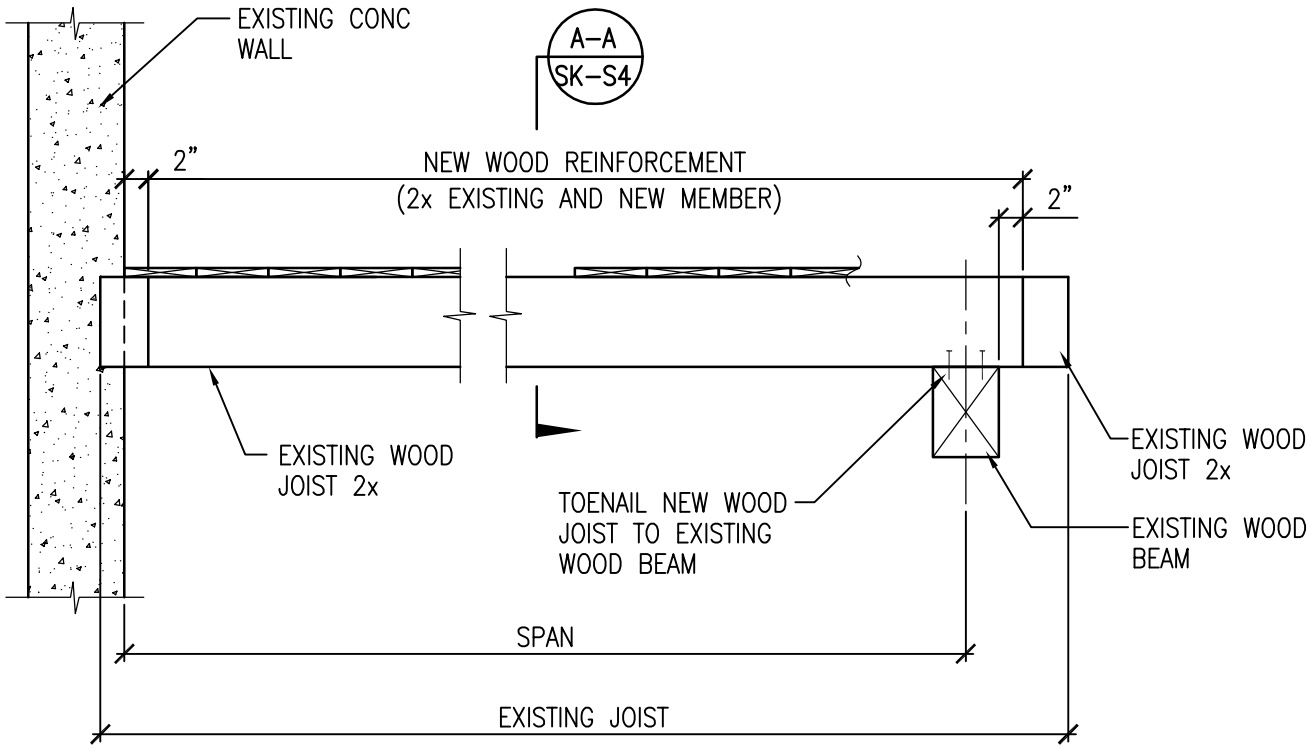

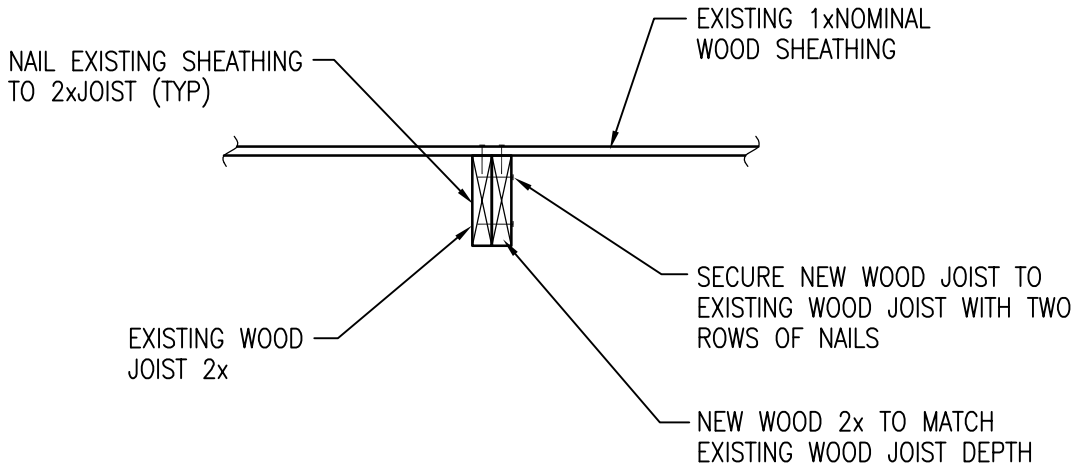

SECTION A-A

Yolles | A CH2M HILL Company

Project: GLYNN ARCHER SCHOOL				Project No.	No. SK-S5
Design: A.CHAN	Drawn: DCB	Checked: PDS	Date: August 2012	W.P. No.	Scale 3/4"=1'-0"
Subject: SECOND FLOOR - JOIST PARALLEL TO WALL ANCHORAGE				Reference	

READ THIS SKETCH IN CONJUNCTION WITH STRUCTURAL DRAWINGS AND OTHER CONTRACT DOCUMENTS

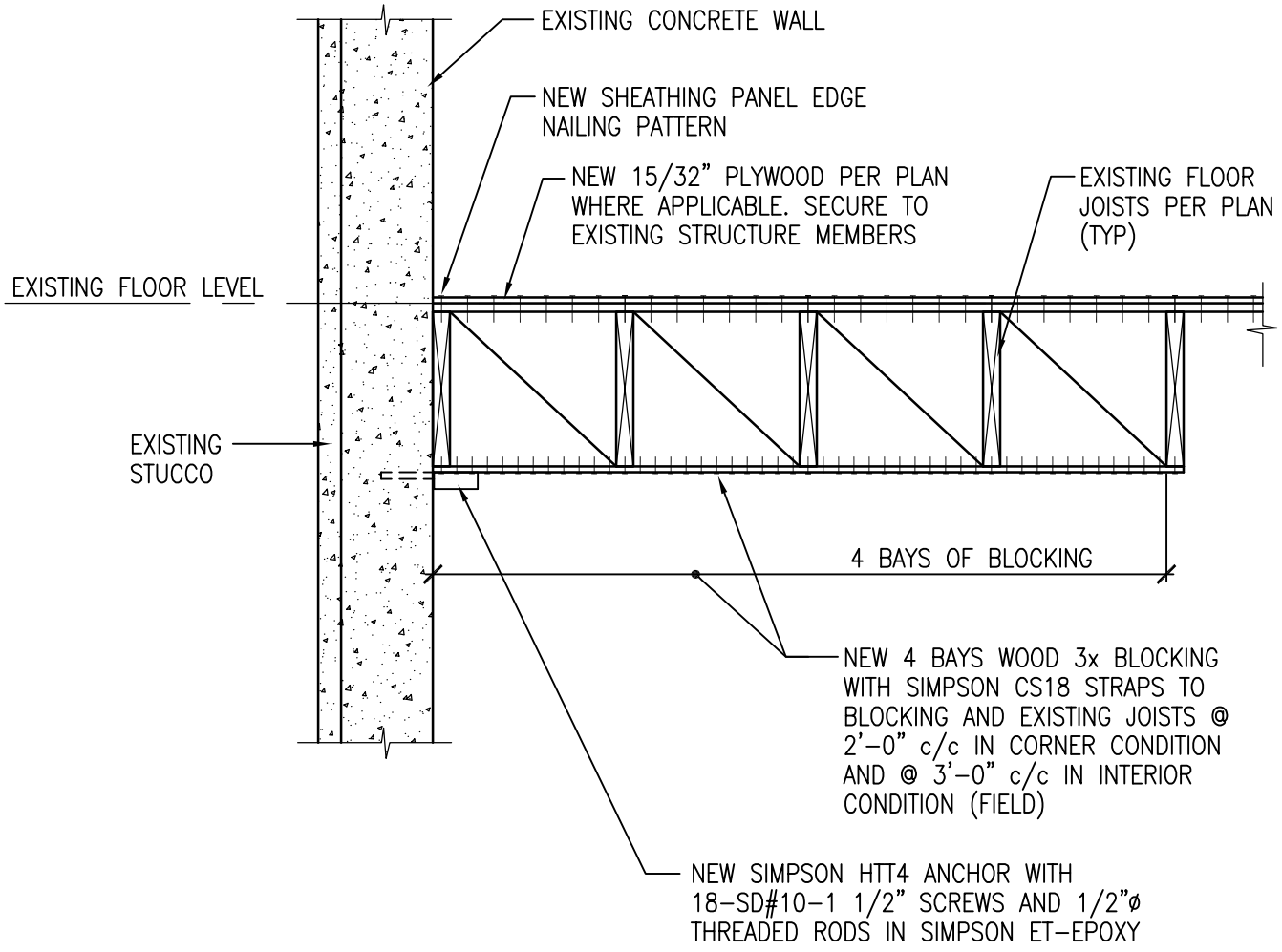

Yolles | A CH2M HILL Company

Project: GLYNN ARCHER SCHOOL				Project No.	No. SK-S6
Design: A.CHAN	Drawn: DCB	Checked: PDS	Date: August 2012	W.P. No.	Scale 3/4"=1'-0"
Subject: SECOND FLOOR - JOIST PERPENDICULAR TO WALL ANCHORAGE				Reference	

READ THIS SKETCH IN CONJUNCTION WITH STRUCTURAL DRAWINGS AND OTHER CONTRACT DOCUMENTS

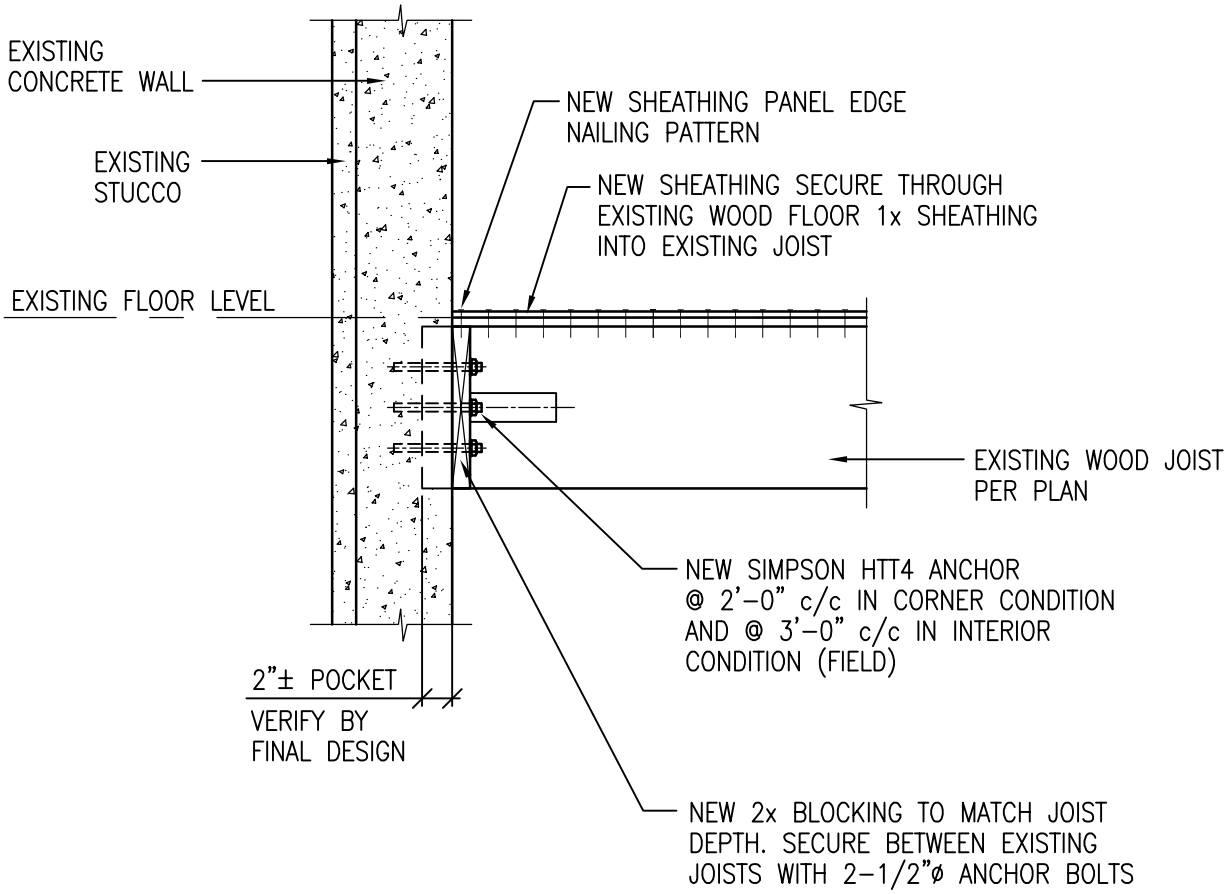

Yolles | A CH2M HILL Company

Project: GLYNN ARCHER SCHOOL				Project No.	No. SK-S7
Design: A.CHAN	Drawn: DCB	Checked: PDS	Date: August 2012	W.P. No.	Scale 3/4"=1'-0"
Subject: ROOF - JOIST / TRUSS PERPENDICULAR TO WALL DIAPHRAGM ANCHORAGE				Reference	

READ THIS SKETCH IN CONJUNCTION WITH STRUCTURAL DRAWINGS AND OTHER CONTRACT DOCUMENTS

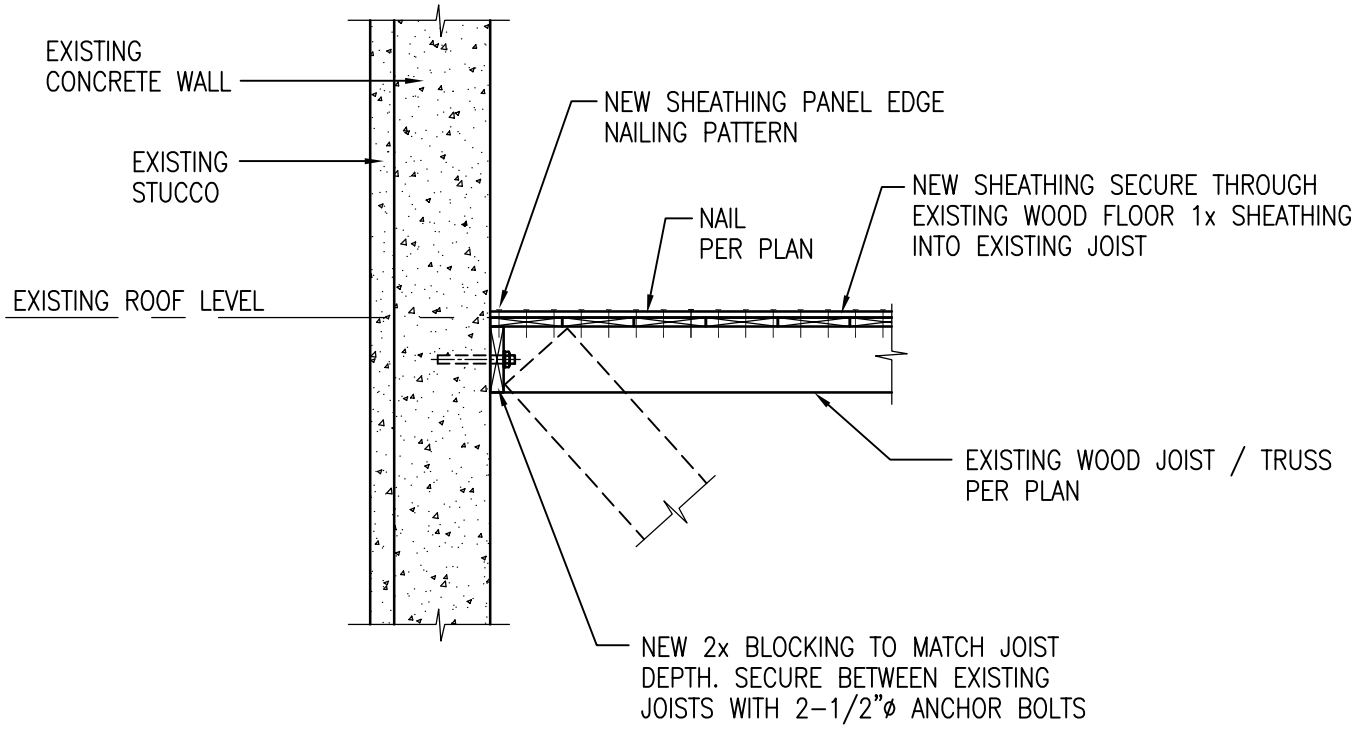

Yolles | A CH2M HILL Company

Project: GLYNN ARCHER SCHOOL				Project No.	No. SK-S8
Design: A.CHAN	Drawn: DCB	Checked: PDS	Date: August 2012	W.P. No.	Scale 3/4"=1'-0"
Subject: ROOF - JOIST / TRUSS PERPENDICULAR TO WALL ANCHORAGE				Reference	

READ THIS SKETCH IN CONJUNCTION WITH STRUCTURAL DRAWINGS AND OTHER CONTRACT DOCUMENTS

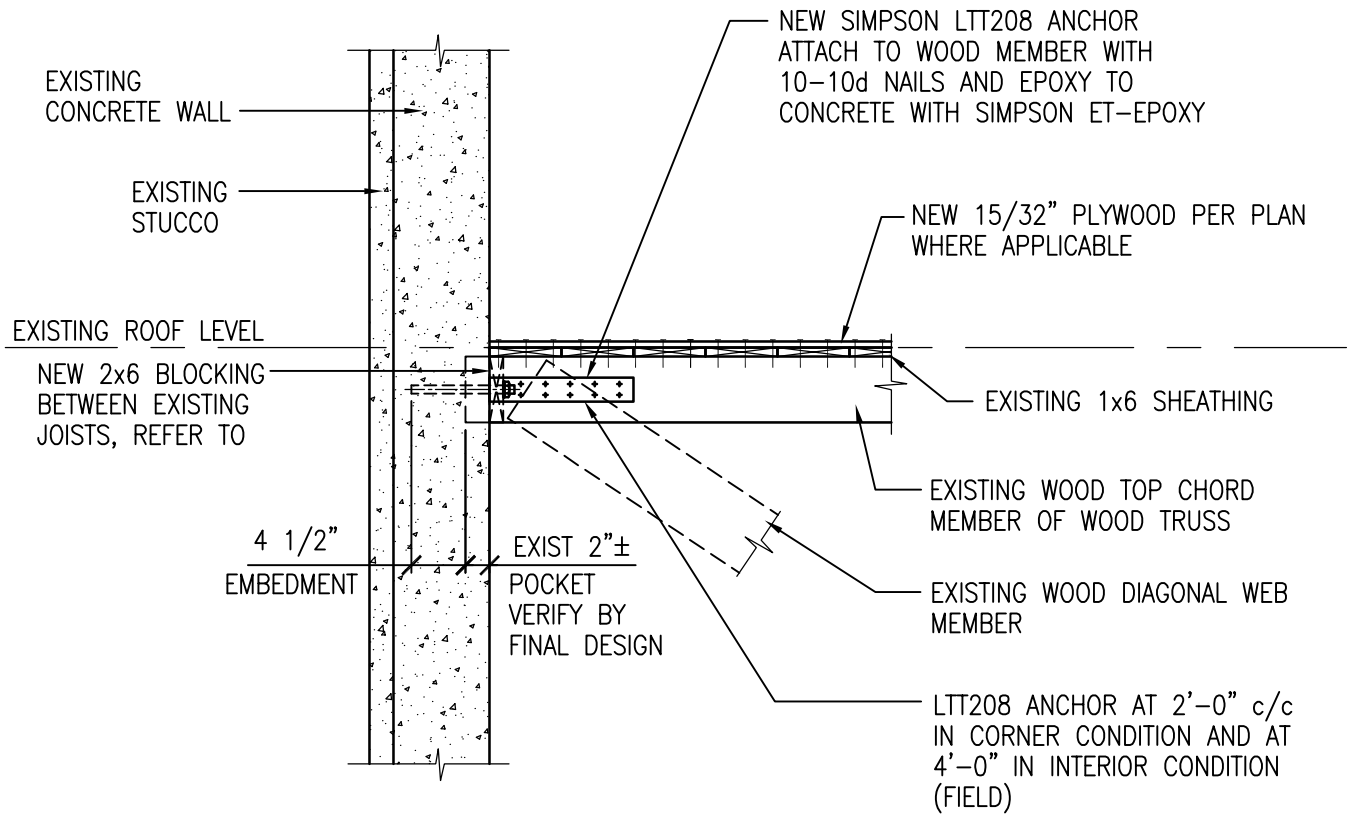

Yolles | A CH2M HILL Company

Project: GLYNN ARCHER SCHOOL				Project No.	No. SK-S9
Design: A.CHAN	Drawn: DCB	Checked: PDS	Date: August 2012	W.P. No.	Scale 3/4"=1'-0"
Subject: ROOF - JOIST / TRUSS PARALLEL TO WALL ANCHORAGE				Reference	

READ THIS SKETCH IN CONJUNCTION WITH STRUCTURAL DRAWINGS AND OTHER CONTRACT DOCUMENTS

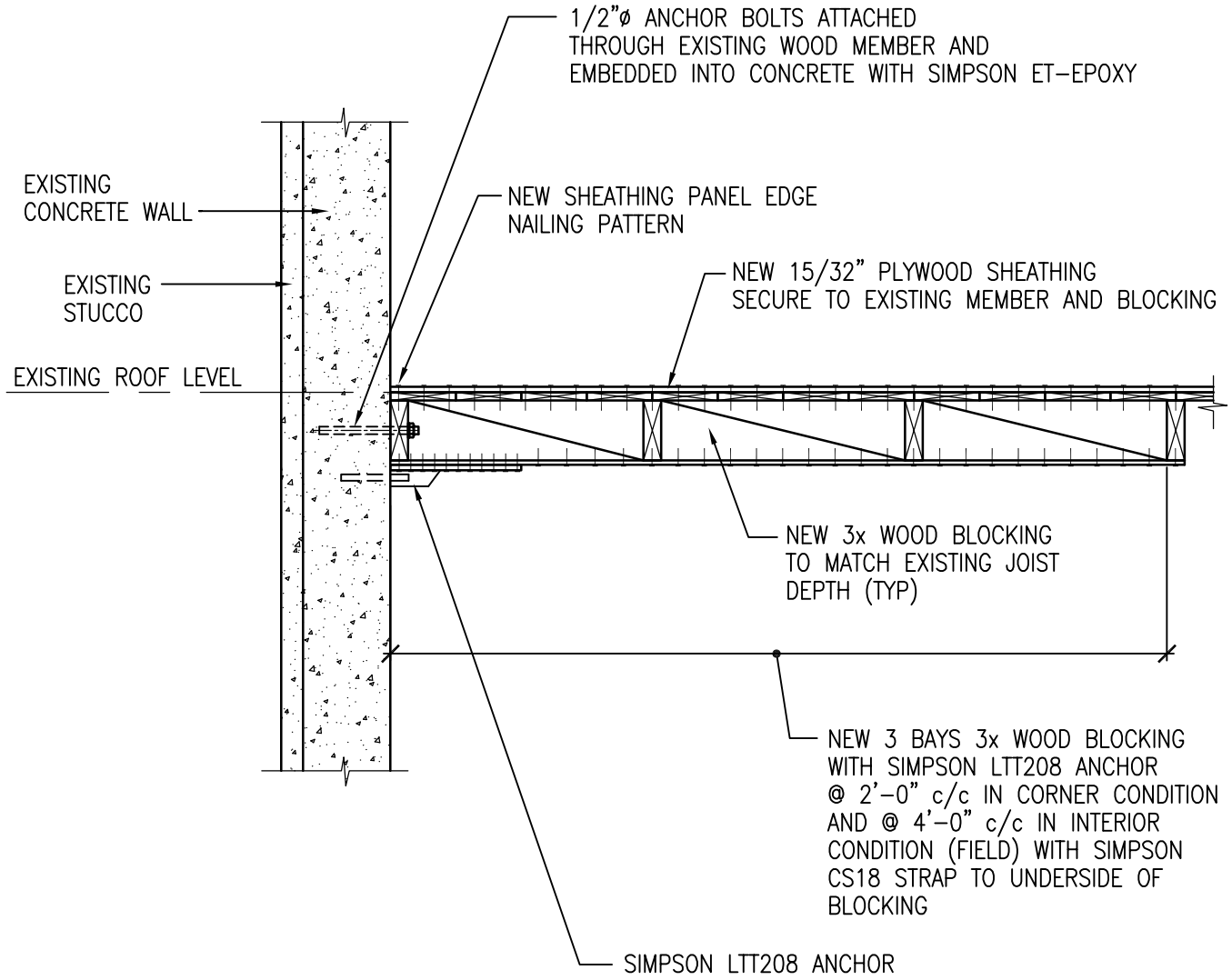

Yolles | A CH2M HILL Company

Project: GLYNN ARCHER SCHOOL				Project No.	No. SK-S10
Design: MIA	Drawn: DCB	Checked: PDS	Date: August 2012	W.P. No.	Scale 3/4"=1'-0"
Subject: WOOD GIRDER REINFORCEMENT SCHEDULE				Reference	

READ THIS SKETCH IN CONJUNCTION WITH STRUCTURAL DRAWINGS AND OTHER CONTRACT DOCUMENTS

WOOD GIRDER REINFORCEMENT SCHEDULE

	EXISTING BEAM	MEMBER REINFORCEMENT	
R1	EXB1	2 – C7x9.8	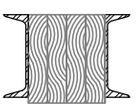
R2	EXB2	4 – 2x8	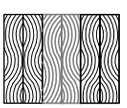
R3	EXB3	3 – 2x8	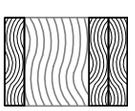
R4	EXB4	2 – C7x9.8	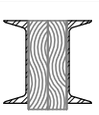
R5	EXB5	1 – 2x8	
R6	EXB6	2 – C7x9.8	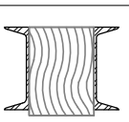
R7	EXB7	2 – 2x8	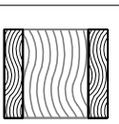
R8	EXB8	2 – C5x9	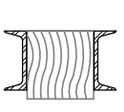

NOTE:

FOR LOCATIONS OF EXISTING BEAMS AND EXISTING BEAMS REQUIRING REINFORCEMENT, REFER TO FOUNDATION AND FIRST FLOOR FRAMING PLAN ON DRAWING S-200.

Yolles | A CH2M HILL Company

Project: GLYNN ARCHER SCHOOL				Project No.	No. SK-S11
Design: MIA	Drawn: DCB	Checked: PDS	Date: August 2012	W.P. No.	Scale 3/4"=1'-0"
Subject: REINFORCED SPREAD FOOTING DETAILS				Reference	

READ THIS SKETCH IN CONJUNCTION WITH STRUCTURAL DRAWINGS AND OTHER CONTRACT DOCUMENTS

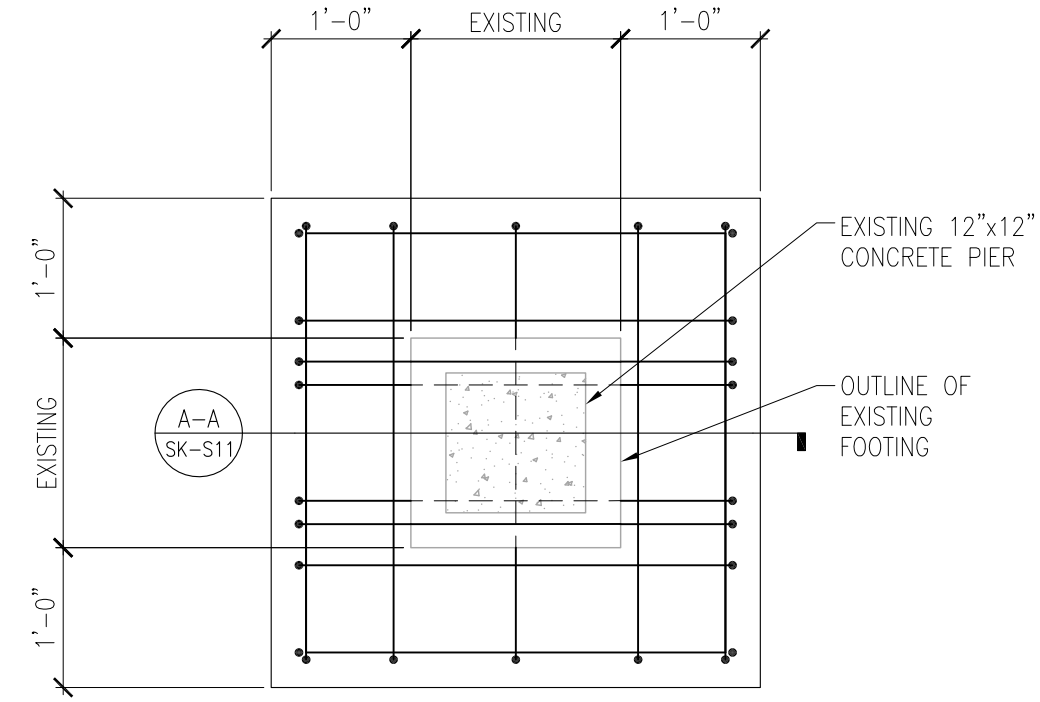

PLAN VIEW

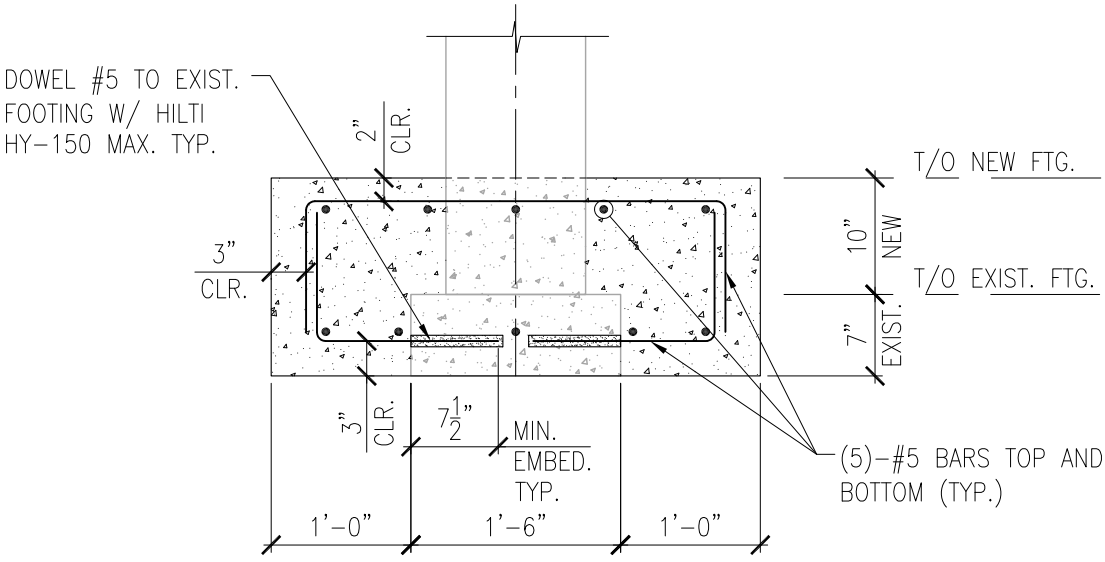

SECTION A-A

Yolles | A CH2M HILL Company

Project: GLYNN ARCHER SCHOOL				Project No.	No. SK-S12
Design: MIA	Drawn: DCB	Checked: PDS	Date: August 2012	W.P. No.	Scale 3/4"=1'-0"
Subject: ROOF JOISTS AT HALLWAY / WOOD CRIPPLE WALLS				Reference	

READ THIS SKETCH IN CONJUNCTION WITH STRUCTURAL DRAWINGS AND OTHER CONTRACT DOCUMENTS

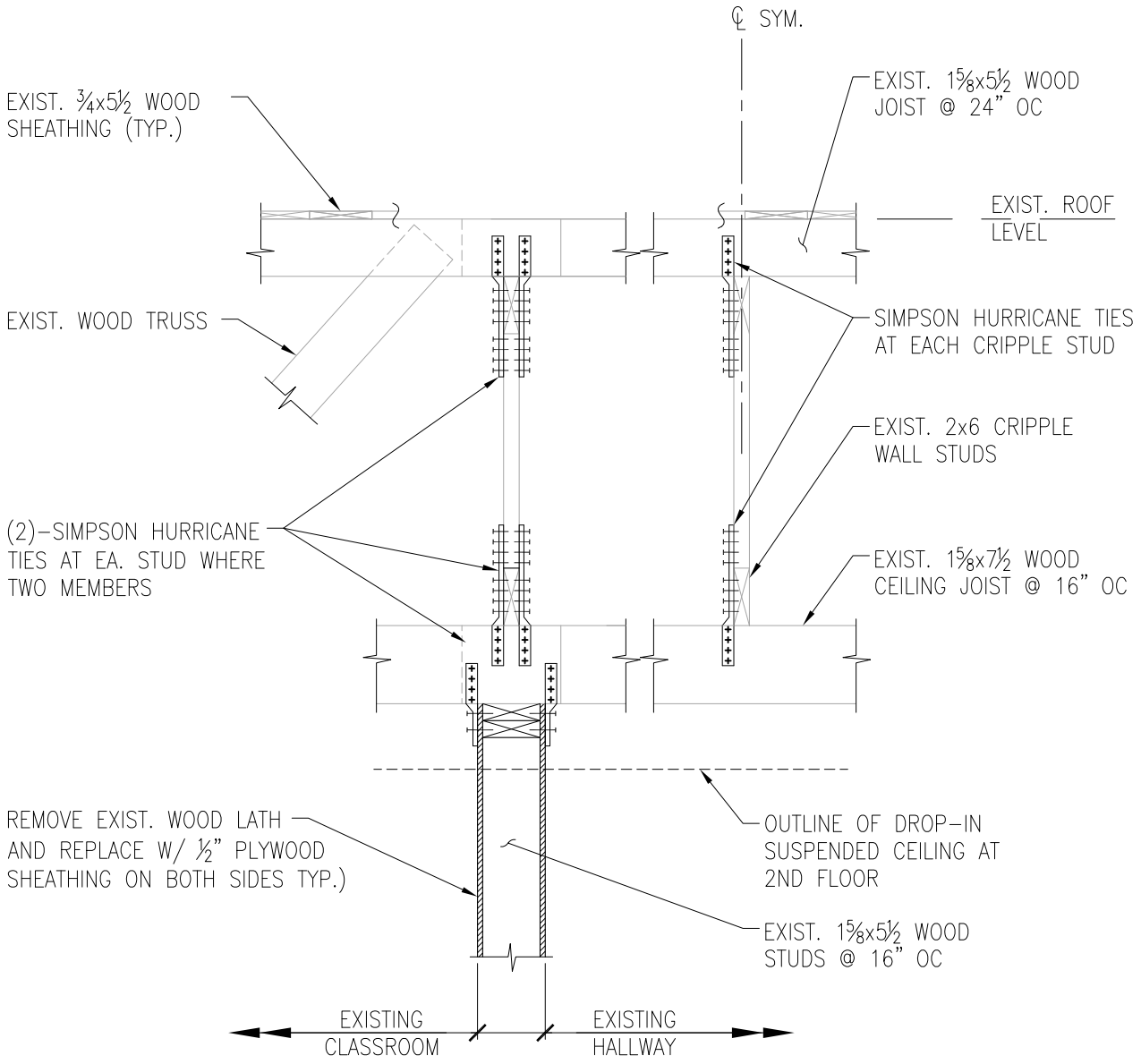

Yolles | A CH2M HILL Company

Project: GLYNN ARCHER SCHOOL				Project No.	No. SK-S13
Design: MIA	Drawn: DCB	Checked: PDS	Date: August 2012	W.P. No.	Scale 3/4"=1'-0"
Subject: AUDITORIUM ROOF WOOD TRUSS				Reference	

READ THIS SKETCH IN CONJUNCTION WITH STRUCTURAL DRAWINGS AND OTHER CONTRACT DOCUMENTS

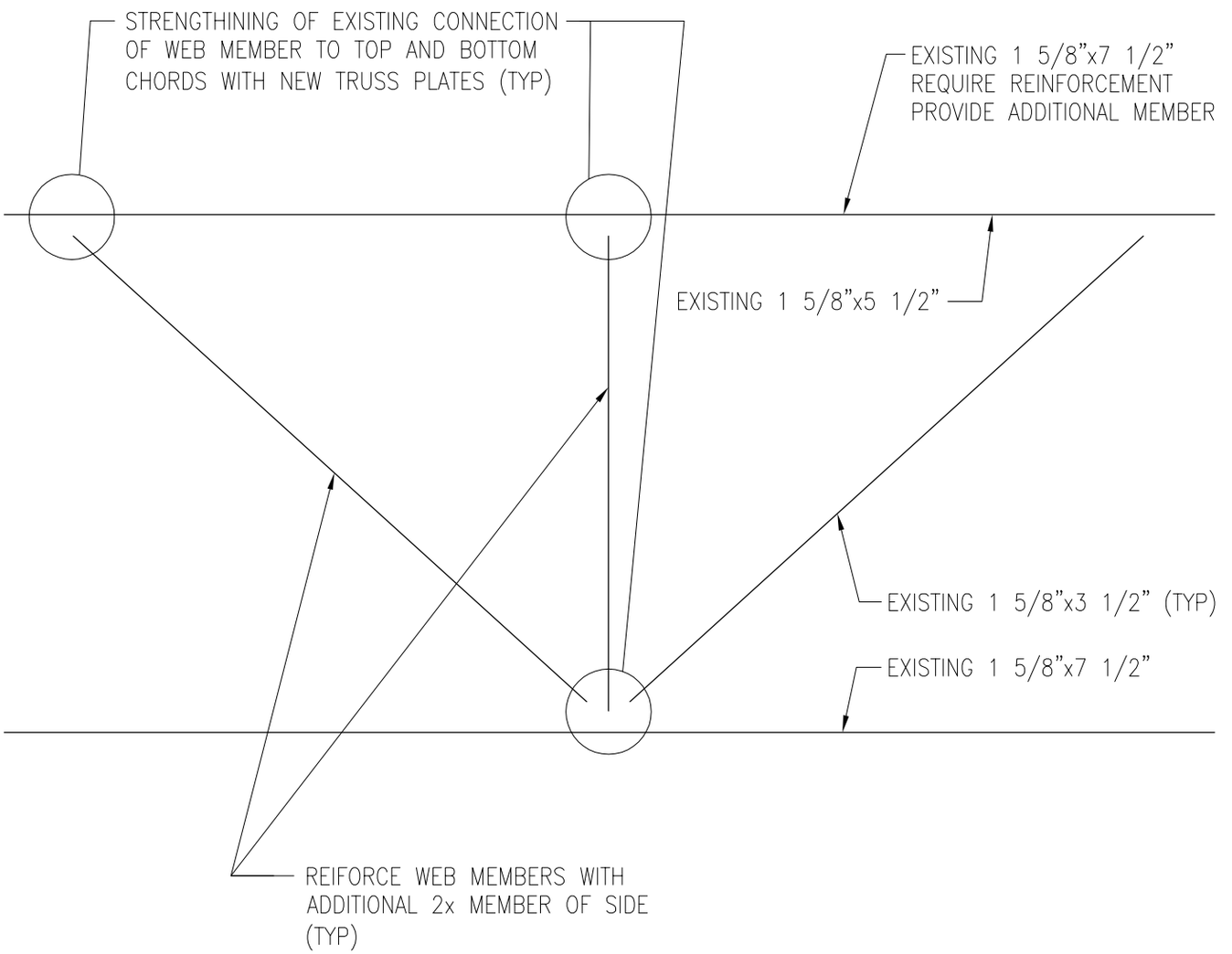

Yolles | A CH2M HILL Company

Project: GLYNN ARCHER SCHOOL				Project No.	No. SK-S14
Design: MIA	Drawn: DCB	Checked: PDS	Date: August 2012	W.P. No.	Scale 3/4"=1'-0"
Subject: BUILDINGS A AND B ROOF WOOD TRUSS				Reference	

READ THIS SKETCH IN CONJUNCTION WITH STRUCTURAL DRAWINGS AND OTHER CONTRACT DOCUMENTS

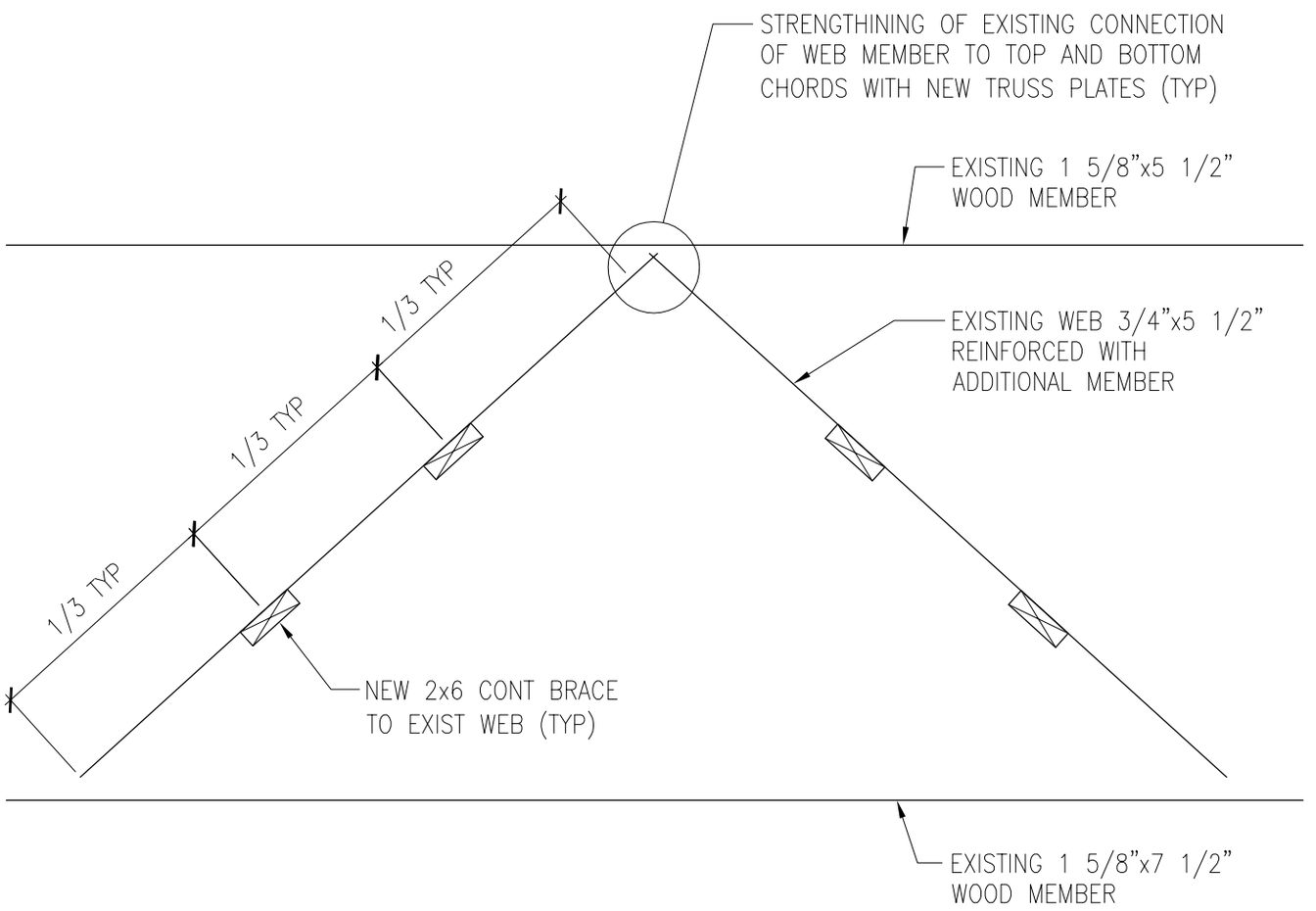

Yolles | A CH2M HILL Company

Project: GLYNN ARCHER SCHOOL				Project No.	No. SK-S15
Design: MIA	Drawn: DCB	Checked: PDS	Date: August 2012	W.P. No.	Scale 3/4"=1'-0"
Subject: CEILING JOIST BEARING AT EXTERIOR CONCRETE WALL				Reference	

READ THIS SKETCH IN CONJUNCTION WITH STRUCTURAL DRAWINGS AND OTHER CONTRACT DOCUMENTS

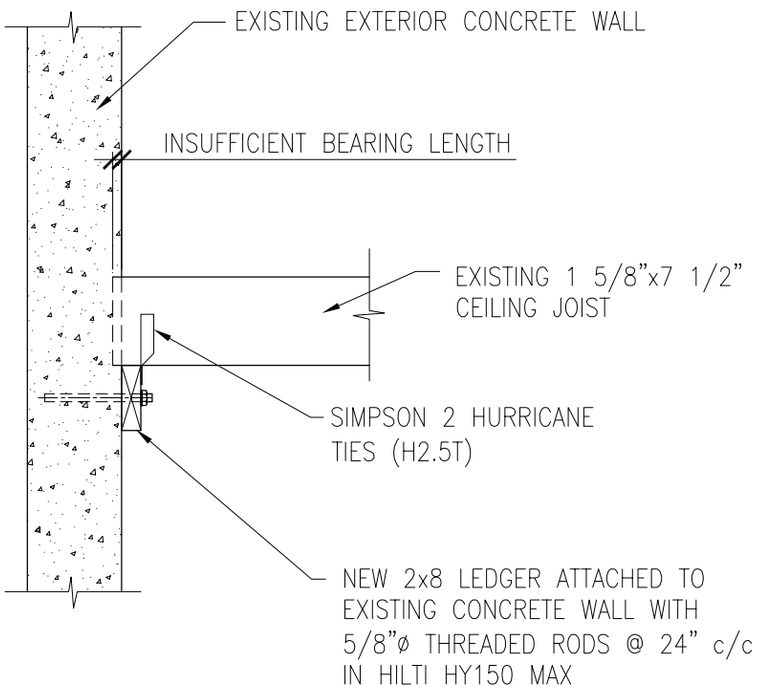

Yolles | A CH2M HILL Company

Project: GLYNN ARCHER SCHOOL				Project No.	No. SK-S16
Design: MF	Drawn: DCB	Checked: MIA / PDS	Date: August 2012	W.P. No.	Scale NTS
Subject: CONCEPT COST ESTIMATING				Reference	

READ THIS SKETCH IN CONJUNCTION WITH STRUCTURAL DRAWINGS AND OTHER CONTRACT DOCUMENTS

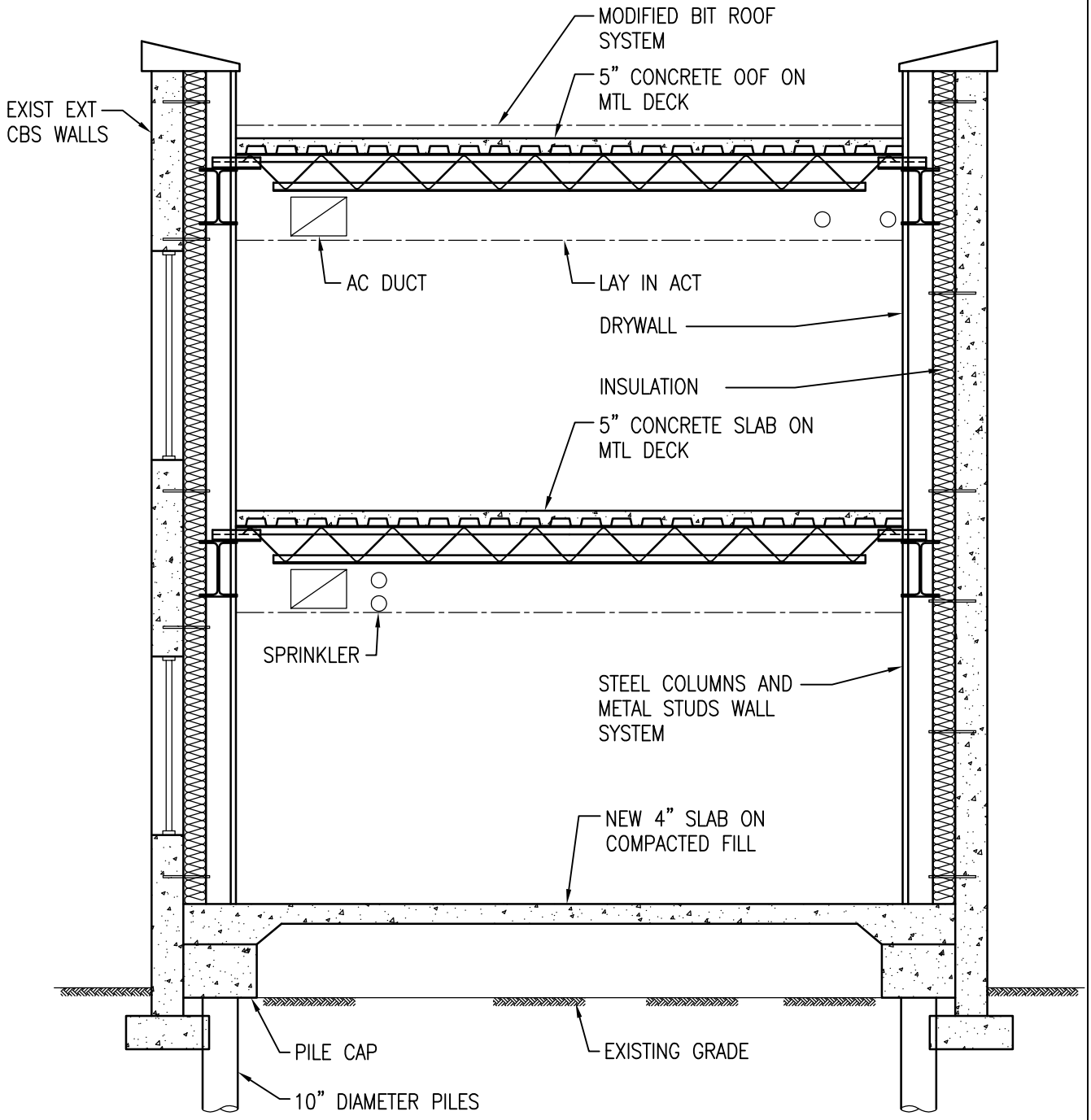

A-A BUILDING SECTION (BLUE SKY)

NTS