THE CITY OF KEY WEST
3140 Flagler St,
Key West, Florida 330-40

<u>ADDENDUM #1</u>
Ornamental Fencing Replacement
Invitation to Bid: 12-029
13 July 2012

This Addendum is issued as supplemental information to the bid package for clarification of certain matters of both a general and a technical nature. The referenced bid package is amended in accordance with the following items:

1. The Engineering cost estimate for this project is $1,600,000 dollars
2. A valid, current Florida Contractors License is required under this contract. Proof shall be submitted with the bid.
3. A single Right Of Way Permit ($50) is required under this project to cover all locations. Contractor shall evaluate each location and develop a MOT program.
4. Contractor is to be aware that while working on the mole a cruise ship may be present. Contractor's efforts shall not impede traffic flow while a cruise ship is present.
5. All Contractor and subcontractor employees working on the project sites shall be in possession of a Rapid Pass ID Card. Contractor shall include in his bid cost to obtain.
6. Aerial: Replace the site location aerials with those the attached.
7. Estimated Quantities for Fencing Repair ITB 12-029: Delete this sheet.
8. Bid Sheet: A revised bid sheet is attached.
9. From September 12 to September 21,2012 the U.S. Navy will be holding a UNITAS Exercise at the Mole. No work will be permitted in the Mole Port Operations Area during this time. No temporary fencing will be allowed to secure the Mole Port Operations Area during this period
10. In November 2012 the annual Power Boat Races (1 week) will occur and no work will be permitted at the Mole Port Operations area. No temporary fencing will be allowed to secure the Mole Port Operations area during this period
11. Contractor is responsible for clearing as required to access work. Established landscaping shall be returned to its original condition. Mangroves shall be tied

back out of work area or a trimming permit received from the required agencies at the cost of the contractor.

12. Temporary fencing that is required to remain overnight to secure and area shall have top and bottom rails, 8 feet in height and verticals embedded 2 feet deep in concrete.
13. Contractor shall be required to install sufficient intermediate posts to ensure that the installed fencing will meet the 140mph wind load requirement. Contractor shall contact manufacturer to determine maximum span before an intermediate post is required
14. Fence Anchors: shall have a minimum embedment depth of 4 inches and shall be 3/8" diameter
15. Fence Anchors: Existing Fence anchors and other mounting hardware (section 14) shall be completely removed or cut back in such a way that a minimum of 1-3/4" concrete cover is provided in addition to the stucco finish. Restoration of area after anchor removal is NOT considered a spall repair.
16. At the junction of Section 12 and Section 13, there is a curved portion of fencing at this location. This section may be replaced with a straight section.
17. Salvage: Contractor shall carefully remove 1,500 lf of fencing (to be determined) by the City and deliver to a designated storage site within the City Of Key West
18. Paint: Paint for concrete works shall be Sherwin-Williams A-100 Exterior Acrylic Latex Paint (or equivalent): Bright White
19. Privacy Mesh: Shall be installed on sections 3, 11 and 12. See following website: http://www.fencescreen.com/Products/200-Series-Privacy-Screen.aspx Color: Black
20. Concrete Works: The concrete curb to be installed on section 10 shall match the existing concrete curb on the adjacent section 8. The curb shall have two #4 rebar with 3 inches of concrete cover. See detail on Sheet C-5 (Detail 10.1)
21. Concrete Caps: All existing caps in section 5A shall be removed and replaced with the caps shown on Sheet C-5 (Details 4.1 and 4.2)
22. Concrete Works: Contractor will be required to perform curb repairs along section 1 in accordance with the attached detail shown on Sheet C-6. Contractor shall identify defective concrete and quantities and verify with the City's Representative.

All Bidders shall acknowledge receipt and acceptance of this Addendum No 5 by acknowledging Addendum in their proposal or by submitting the addendum with the bid package. Bids submitted without acknowledgement or without this Addendum may be considered non-responsive

_____ _____

Signature Name Of Business

BEGIN
SECTION 11
END
SECTION 11
BEGIN
SECTION 12
END SECTION 12
BEGIN SECTION 13
END
SECTION 13

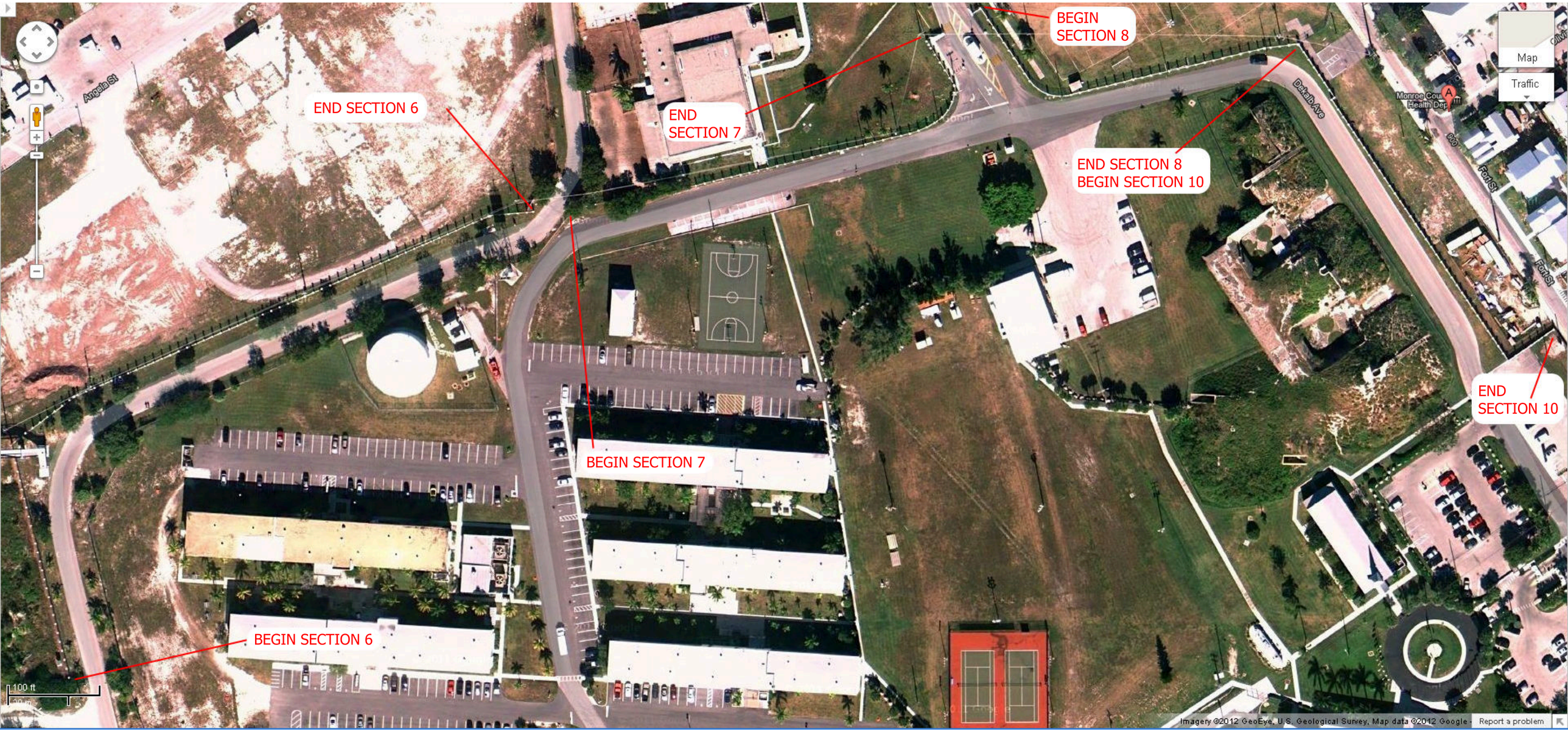
BEGIN SECTION 8
END SECTION 6
END SECTION 7
END SECTION 8
BEGIN SECTION 10
END SECTION 10
BEGIN SECTION 7
BEGIN SECTION 6
Angela St
Dalab Ave
Fort St
Map
Traffic
100 ft
Imagery ©2012 GeoEye, U.S. Geological Survey, Map data ©2012 Google
Report a problem

SECTION 9
"TACTS TOWER"

BEGIN
SECTION 1
END
SECTION 5A
END SECTION 1
BEGIN SECTION 2
END SECTION 5
BEGIN SECTION 5A
BEGIN
SECTION 5
END
SECTION 4
END
SECTION 2
BEGIN
SECTION 3
END SECTION 3
BEGIN SECTION 4
BEGIN
SECTION 7

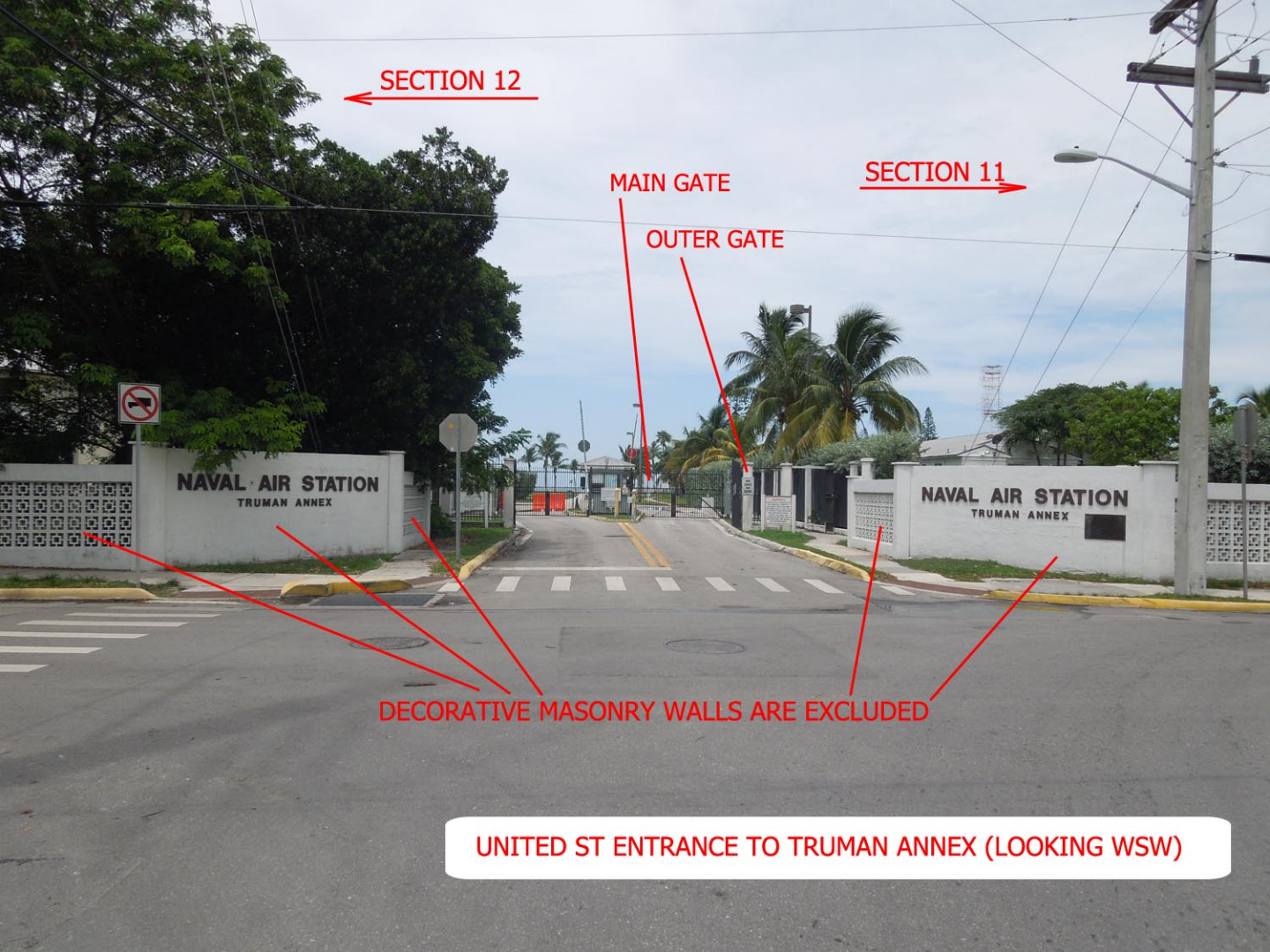

UNITED ST ENTRANCE TO TRUMAN ANNEX (LOOKING WSW)

END OF
SECTION 11
MAIN GATE
EXCLUDED
OUTER GATE
EXCLUDED
GATES & SHORT SECTION EXCLUDED
UNITED ST ENTRANCE LOOKING NORTHWEST
WARNING
ENTRY WITH A WEAPON IS
PROHIBITED. CONTACT
SECURITY FOR FURTHER
INFORMATION. IF YOU FAIL
TO CHECK YOUR WEAPON
WITH SECURITY UPON
ENTRY, YOU WILL BE
PROSECUTED AND YOUR
WEAPON WILL BE SEIZED
AS CONTRABAND

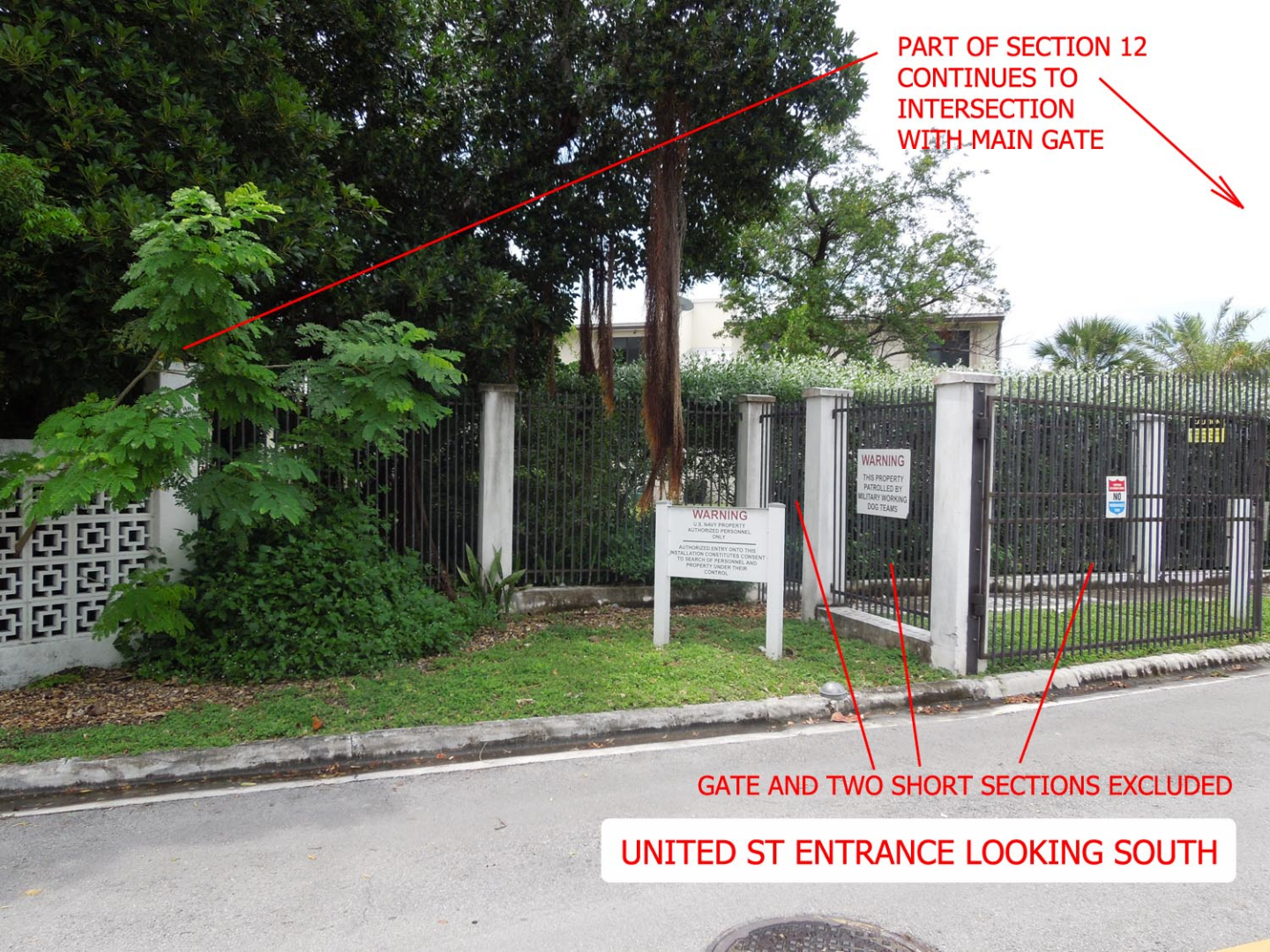

UNITED ST ENTRANCE LOOKING SOUTH

NOTE TO BIDDER: Use preferably BLACK ink for completing this Bid form.

BID FORM

To: The City of Key West

Address: 3140 Flagler Ave, Key West, Florida 33040

Project Title: Ornamental Fencing Replacement NASKW

City of Key West Project No.: **ITB 12-029**

Bidder's contact for additional information on this Bid:

Company Name: _____

Contact Name: _____

Telephone: _____

BIDDER'S DECLARATION AND UNDERSTANDING

The undersigned, hereinafter called the Bidder, declares that the only persons or parties interested in this Bid are those named herein, that this Bid is, in all respects, fair and without fraud, that it is made without collusion with any official of the Owner, and that the Bid is made without any connection or collusion with any person submitting another Bid on this Contract.

The Bidder further declares that he has carefully examined the Contract Documents for the construction of the project, that he has personally inspected the site, that he has satisfied himself as to the quantities involved, including materials and equipment, and conditions of work involved, including the fact that the description of the quantities of work and materials, as included herein, is brief and is intended only to indicate the general nature of the Work and to identify the said quantities with the detailed requirements of the Contract Documents, and that this Bid is made according to the provisions and under the terms of the Contract Documents, which Documents are hereby made a part of this Bid.

The Bidder further agrees, as evidenced by signing the Bid, that if awarded a Contract, the Florida Trench Safety Act and applicable trench safety standards will be complied with.

CONTRACT EXECUTION AND BONDS

The Bidder agrees that if this Bid is accepted, he will, within 10 days, not including Sundays and legal holidays, after Notice of Award, sign the Contract in the form annexed hereto, and will at that time, deliver to the Owner examples of the Performance Bond and Payment Bond required herein, and evidence of holding required licenses and certificates, and will, to the extent of his Bid, furnish all machinery, tools, apparatus, and other means of construction and do the Work and furnish all the materials necessary to complete all work as specified or indicated in the Contract Documents.

CERTIFICATES OF INSURANCE

Bidder agrees to furnish the Owner, before commencing the Work under this Contract, the certificates of insurance as specified in these Documents.

START OF CONSTRUCTION AND CONTRACT COMPLETION TIMES

The Bidder agrees to begin work within 10 calendar days after the date of the Notice to Proceed and to achieve Substantial Completion within 150 calendar days from the date when the Contract Times commence to run as provided in paragraph 2.03.A of the General Conditions, and Work will be completed and ready for final payment and acceptance in accordance with paragraph 14.07 of the General Conditions within 150 calendar days from the date when the Contract Times commence to run.

LIQUIDATED DAMAGES

In the event the Bidder is awarded the Contract, Owner and Bidder recognize that time is of the essence of this Agreement and that Owner will suffer financial loss if the Work is not completed within the times specified in paragraph Start of Construction and Contract Completion Times above, plus any extensions thereof allowed in accordance with Article 12 of the General Conditions. Owner and Bidder also recognize the delays, expense, and difficulties involved in proving in a legal or other dispute resolution proceeding the actual loss suffered by Owner if the Work is not completed on time. Accordingly, instead of requiring any such proof, Owner and Bidder agree that as liquidated damages for delay (but not as a penalty) Bidder shall pay Owner **$200** per day for each day that expires after the time specified for substantial completion.

After Substantial Completion, if Bidder neglects, refuses, or fails to complete the remaining Work within the Contract Times or any Owner-granted extension thereof, Bidder shall pay Owner **$200** for each day that expires after the time specified in paragraph Start of Construction and Contract Completion Times, above for completion and readiness for final payment. Liquidated damages shall run concurrent.

Owner will recover such liquidated damages by deducting the amount owed from the final payment or any retainage held by Owner.

ADDENDA

The Bidder hereby acknowledges that he has received Addenda Nos. _____, _____, ____, _____, ____, (Bidder shall insert No. of each Addendum received) and agrees that all addenda issued are hereby made part of the Contract Documents, and the Bidder further agrees that his Bid(s) includes all impacts resulting from said addenda.

SALES AND USE TAXES

The Bidder agrees that all federal, state, and local sales and use taxes are included in the stated Bid Prices for the Work. Cash allowances DO NOT include any sales and use tax. Equipment allowance includes taxes as shown in Equipment Suppliers' Bid.

PUBLIC ENTITY CRIMES

"A person or affiliate who has been placed on the convicted vendor list following a conviction for a public entity crime may not submit a bid on a contract to provide any goods or services to a public entity, may not submit a bid on a contract with a public entity for the construction or repair of a public building or public work, may not submit bids on leases of real property to a public entity, may not be awarded or perform work as a contractor, supplier, subcontractor, or consultant under a contract with any public entity and may not transact business with any public entity in excess of the threshold amount provided in Section 287.017, for CATEGORY TWO for a period of 36 months from the date of being placed on the convicted vendor list."

COMBINED UNIT PRICE AND LUMP SUM WORK

The Bidder further proposes to accept as full payment for the Work proposed herein the amounts computed under the provisions of the Contract Documents. For unit price bid items, the estimate of quantities of work to be done is tabulated in the Proposal and, although stated with as much accuracy as possible, is approximate only and is assumed solely for the basis of calculation upon which the award of Contract shall be made. For lump sum bid items, it is expressly understood that the amounts are independent of the exact quantities involved. The Bidder agrees that the amounts for both unit price and lump sum work represent a true measure of labor and materials required to perform the Work, including all allowances for inspection, testing, overhead and profit for each type of work called for in these Contract Documents. The amounts shall be shown in both words and figures. In case of discrepancy, the amount shown in words shall govern.

SPALLING AND STUCCO REPAIR

All quantities for masonry are estimated. As each phase or section of work begins, the Contractor shall mark and measure areas to be repaired. Actual quantities of such work shall be paid at the prescribed unit prices.

Bidder will complete the Work in accordance with the Contract Documents for a fixed fee price.

Truman Annex Itemized Unit Prices

Item	Description	Quantity	Unit	Rate	Cost
1	*RAPID* Gate costs	1	LS		
2	Concrete spall repairs on columns	100	SF		
3	Stucco Repairs	500	SF		
4	Paint Columns & Curbs 2 Coats (Per LF of fencing)	5972	LF		
5	Demolition and removal of short caps: Sheet C-3	40	EA		
6	Formed and Poured Square Concrete Caps Sheet C-3	40	EA		
7	Demolition and removal of half-height CBS wall	526	LF		
8	Formed and Poured 8" peaked curb: Sheet C-5 (Detail 10.1)	526	LF		
9	Provide and Install 8'H 3-rail security fence	5972	LF		
10	Remove and dispose of 8'H imitation iron fence (1500 LF to be turned over to City)	5972	LF		
11	Provide and install access gates,	10	LF		
12	Provide and install 316SS custom fabricated "fans"	3	EA		
13	Concrete Curb repair Sheet 6	200	LF		
14	Concrete Caps Section 5a (Sheet C-5 Detail 4.1 and 4.2)	13	EA		
Subtotal ~ Truman Annex					

Unless stipulated otherwise, all unit prices are to include procurement, delivery, and installation of materials, required equipment, tools, and safety gear, demolition, removal and disposal of waste, clean-up and restoration of facilities and grounds to original or better condition. Painting and masonry repair unit costs to include all materials and labor costs for cleaning, surface preparation, and finishing.

Trumbo Point Itemized Unit Prices

Item	Description	Quantity	Unit	Rate	Cost
15	Extend height of existing concrete 16” sq. pilasters from 72” nom. to 96” min. Sheet C-4	39	EA		
16	Stucco refinishing extended pilasters (and prep/prime for paint)	1664	SF		
17	Paint pilasters & caps (two coats)	1166	LF		
18	Provide and Install 8’H 3-rail security fence	1166	LF		
19	Demolition and removal of existing precast caps	39	EA		
20	Remove and dispose of 6’H imitation iron fence	1166	LF		
21	Formed and Poured Square Concrete Caps	39	EA		
	Subtotal ~ Trumbo Point				

Unless stipulated otherwise, all unit prices are to include procurement, delivery, and installation of materials, required equipment, tools, and safety gear, demolition, removal and disposal of waste, clean-up and restoration of facilities and grounds to original or better condition. Painting and masonry repair unit costs to include all materials and labor costs for cleaning, surface preparation, and finishing.

LUMP SUM BASE BID – TOTAL OF ALL EXTENDED UNIT PRICES

_____Dollars

(Amount written in words has precedence)

and _____Cents

TOTAL LUMP SUM BASE BID $_____

(numerals)

ALTERNATE BID ITEMS

Item	Description	Quantity	Unit	Rate	Cost
	Alternate Bid Item #1				
1a	Section 9 Provide and install 8'H fence	596	LF		
1b	Section 9 Paint Columns & Curbs 2 Coats (Per LF of fencing)	596	LF		
1c	Section 9 Remove and dispose of 8'H imitation iron fence	596	LF		
1d	Section 9 Provide and install gates, removing existing gates.	14	LF		
	Subtotal - Alternate Bid Item #1				
Alt. Bid Item #2	Section 1 – Additional cost to substitute Aluminum 8'H fence for Galvanized fence	350	LF		
Alt. Bid Item #3	Section 2 – Additional cost to substitute Aluminum 8'H fence for Galvanized fence	752	LF		
Alt. Bid Item #4	Section 5A – Additional cost to substitute Aluminum 8'H fence for Galvanized fence	135	LF		
Alt. Bid Item #5	Section 13 – Additional cost to substitute Aluminum 8'H fence for Galvanized fence	72	LF		
Alt. Bid Item #6	Section 1 – Additional cost to substitute 316SS 8'H fence for Galvanized fence[2]	350	LF		
Alt. Bid Item #7	Section 2 – Additional cost to substitute 316SS 8'H fence for Galvanized fence[2]	752	LF		
Alt. Bid Item #8	Section 5A – Additional cost to substitute 316SS 8'H fence for Galvanized fence[2]	135	LF		
Alt. Bid Item #9	Section 13 – Additional cost to substitute 316SS 8'H fence for Galvanized fence[2]	72	LF		

Alternate Bid Items Notes:

1. Section numbers refer to fencing sections as depicted on Sheet 00 82 02 in Section 3 - Drawings and Specifications.

2. Alternate bid items # 6 through #9 inclusive are for substitution of 316 Stainless Steel fencing sections which may not be commercially available. If bidder enters **n/a** for any or all of these four Alternate Bid Items and submits in writing the reason(s) for not submitting a cost for these items, such bids shall still be considered responsive and shall not be disqualified. If such a bidder shall prevail and be awarded this contract, the City may at its discretion deduct the four affected sections from the base contract without affecting the unit prices as applied to all other sections.

3. Alternate bid items #2 though #9 shall have a black power coated finish. Cost of this finish shall be included in the unit prices

4. SUBCONTRACTORS

The Bidder further proposes that the following subcontracting firms or businesses will be awarded subcontracts for the following portions of the Work in the event that the Bidder is awarded the Contract:

_____
Name

_____ _____ _____
Street City State Zip

_____
Name

_____ _____ _____
Street City State Zip

_____
Name

_____ _____ _____
Street City State Zip

_____
Name

_____ _____ _____
Street City State Zip

Surety

_____whose address is

_____ _____ _____
Street City State Zip

Bidder

The name of the Bidder submitting this Bid is _____

_____ doing business at

_____ _____ _____

Street City State Zip

which is the address to which all communications concerned with this Bid and with the Contract shall be sent.

The names of the principal officers of the corporation submitting this Bid, or of the partnership, or of all persons interested in this Bid as principals are as follows:

_____ _____

_____ _____

_____ _____

If Sole Proprietor or Partnership

IN WITNESS hereto the undersigned has set his (its) hand this ___ day of _____ 20___.

_____

Signature of Bidder

_____

Title

If Corporation

IN WITNESS WHEREOF the undersigned corporation has caused this instrument to be executed and its seal affixed by its duly authorized officers this ___ day of 20___.

(SEAL)

_____
Name of Corporation

By: _____

Title: _____

Attest: _____
Secretary

END OF SECTION

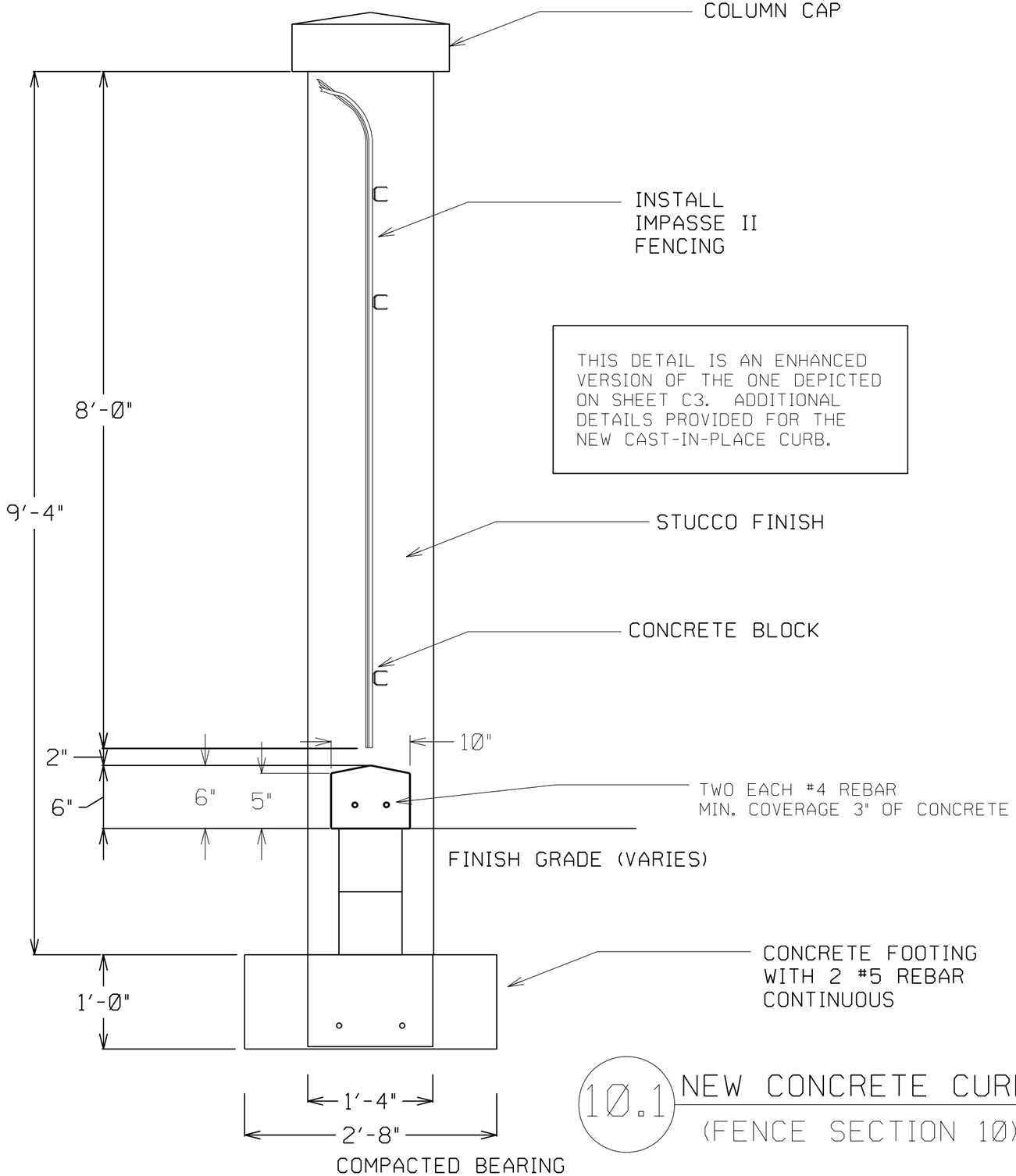

10.1 NEW CONCRETE CURB
(FENCE SECTION 10)

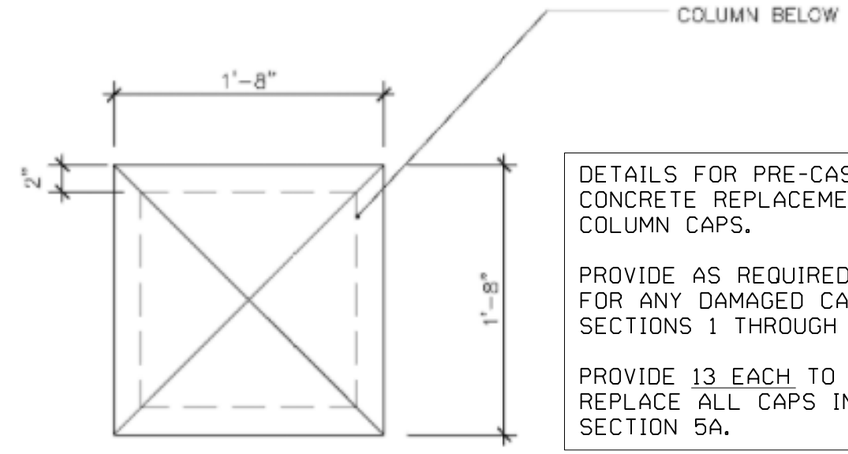

DETAILS FOR PRE-CAST CONCRETE REPLACEMENT COLUMN CAPS.

PROVIDE AS REQUIRED FOR ANY DAMAGED CAPS SECTIONS 1 THROUGH 10.

PROVIDE 13 EACH TO REPLACE ALL CAPS IN SECTION 5A.

4.1 COLUMN CAP PLAN

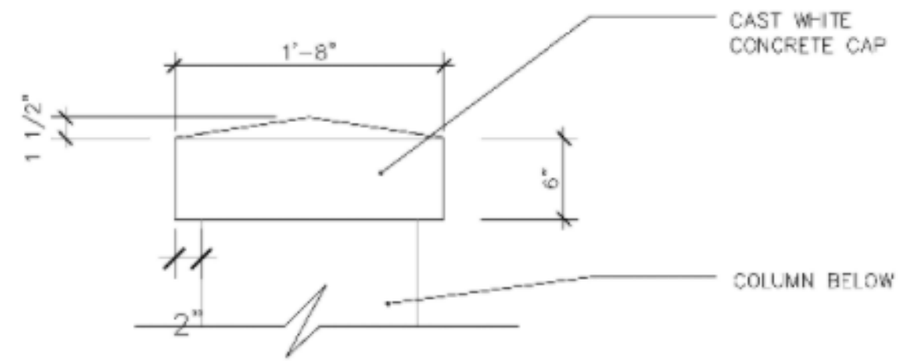

4.2 COLUMN CAP ELEVATION

PRELIMINARY CONSTRUCTION DETAILS
US NAVY - CITY OF KEY WEST IN-KIND PROJECT
REPAIRS TO OUTER MOLE PIER FENCING

CITY OF KEY WEST
PREPARED BY: TERRENCE JUSTICE 305.809.3943 tjustice@keywestcity.com

SHEET C5

MINIMUM OVERLAP WITH
EXISTING REBAR IS 12"

IF IT IS NOT POSSIBLE
TO ACHEIVE 12" OVERLAP
THEN TURN DOWN NEW
REBAR 90° AND TERMINATE
IN EPOXY EMBEDMENT
SIMILAR TO #4 REBAR HOOPS,
MINIMUM 5" DEPTH.

REPAIR SPALLING IN EXISTING CONCRETE CURB (PILE-CAP) SECTION 1

ESTIMATED QUANTITY 200 LINEAL FEET

FENCING AND PILASTERS (COLUMNS) FOR ALL
OF SECTION 1 ARE BUILT UPON A CONCRETE
CURB / PILE-CAP AS DEPICTED.

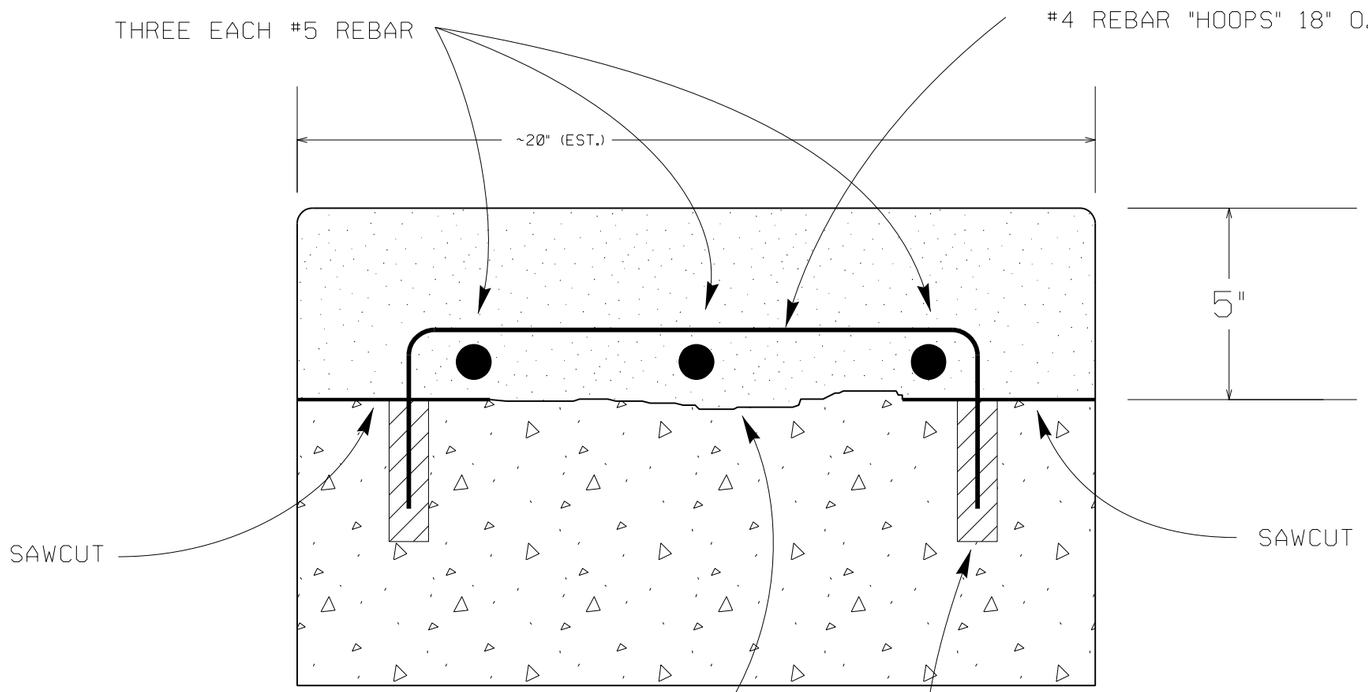

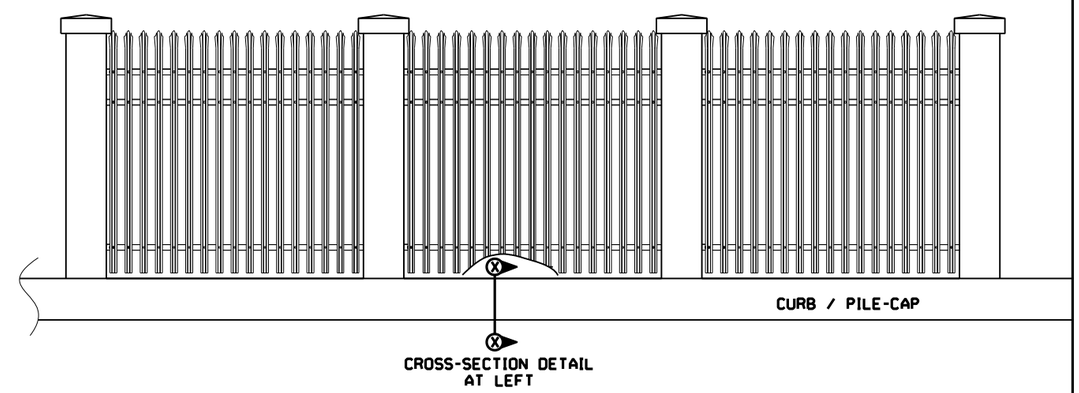

- CHIP AWAY EXISTING CONRETE
  MINIMUM 5" DEPTH

- THOROUGHLY CLEAN EXPOSED SURFACES
  AND TREAT WITH MASONRY BONDING AGENT
  BEFORE INTRODUCING NEW CONCRETE.

- ALL REBAR TO BE SCALED, WIREBRUSHED,
  CLEANED AND OSHPO -TREATED.

EMBED #4 REBAR MINIMUM 5"
IN EPOXY BEDDING, IN 3/4"
HOLES DRILLED INTO EXISTING
CONCRETE AND THOROUGHLY
CLEANED BEFORE APPLICATION
OF EPOXY.

PRELIMINARY CONSTRUCTION DETAILS
US NAVY - CITY OF KEY WEST IN-KIND PROJECT
REPAIRS TO OUTER MOLE PIER FENCING

CITY OF KEY WEST
PREPARED BY: TERRENCE JUSTICE 305.809.3943 tjustice@keywestcity.com

SHEET C6