January, 2006

Traffic Impact Study

Study Location: Truman Waterfront

Prepared for City of Key West

Engineer's Certification

I Javier S. Gonzalez, certify that I currently hold on active Professional Engineer's License in the State of Florida and am competent through education and experience to provide engineering services in the civil and traffic engineering disciplines contained in this report. I further certify that this report was prepared by me or under my responsible charge as defined in Chapter 61G15-18.001 F.A.C. and that all statements, conclusions and recommendations made herein are true and correct to the best of my knowledge and ability.

PROJECT: **Traffic Impact Study**
LOCATION: **Truman Waterfront**

Javier S. Gonzalez
PE 49432

TABLE OF CONTENTS

SECTION **PAGE**

1. Introduction 1
2. Study Location and Proposed Development 1
3. Methodology 11
4. Analysis and Results 11
   4.1. Data Collection 11
   4.2. Trip Generation 14
   4.3. Trip Distribution 17
   4.4. Level of Service Analysis 20
5. Conclusions and Recommendations 22

LIST OF TABLES

TABLE **PAGE**

Table 1 Intersection Control 12
Table 2 Results of 72-Hour Counts 12
Table 3 Results of Trip Generation 17
Table 4 Adjusted Peak Period Volumes 17
Table 5 Intersection Level of Service Criteria 20
Table 6 Summary of LOS for Stopped Approach at Un-Signalized Intersection (Existing) 20
Table 7 Summary of LOS for Stopped Approach at Un-Signalized Intersection (Future) 21
Table 8 Summary of LOS for Signalized Intersection (AM Existing) 21
Table 9 Summary of LOS for Signalized Intersection (PM Existing) 22
Table 10 Summary of LOS for Signalized Intersection (AM Future) 22
Table 11 Summary of LOS for Signalized Intersection (PM Future) 22

LIST OF FIGURES

Figure 1 Study Location 2
Figure 2 Study Photographs 3
Figure 3 Study Photographs 4
Figure 4 Study Photographs 5
Figure 5 Study Photographs 6
Figure 6 Study Photographs 7
Figure 7 Study Photographs 8
Figure 8 Study Photographs 9
Figure 9 Study Photographs 10
Figure 10 Existing Turning Movement Counts 13
Figure 11 Trip Distribution 18
Figure 12 Future Turning Movement Counts 19

APPENDIX

Appendix A - Turning Movement Counts
Appendix B - 72-Hour Bi-directional Volume Counts
Appendix C - Existing Level of Service
Appendix D - Future Level of Service

1. Introduction

G. M. Selby and Associates, Inc. in association with Advanced Transportation Engineering Consultants, Inc were retained by the City of Key West to perform a traffic impact study for the Truman Waterfront Development. This is a multi-use development on 33 Acres of former US Navy property. The purpose of this study is to assess the traffic impacts of the proposed new development on the surrounding neighborhood streets.

2. Study Location and Proposed Development

The study area defined for this analysis is bound by Southard Street on the northwest, Truman Avenue on the southeast, Whitehead Street on northeast and Fort Street on the southeast. The study area encompasses almost the entire area known as Bahama Village and abuts the area known as Truman Annex. The nearest major principal highway is SR 5/ US1/ Whitehead Street. Figure 1 depicts an aerial photograph of the study location. The Truman Waterfront Project includes the developing of the entire site into five zoning categories Historic Public Semi-Public District (HPS-1), Historic Neighborhood Commercial District (HNC-2), Historic Medium Density Residential District-1 (HMDR-1), Historic Limited Commercial (HCL) and Truman Waterfront Distric (HRCC-4) as follows:

- (HPS-1) Harborwalk-Parks and recreation, passive and active Community centers
- (HNC-2) Single/two family residential unitsBusiness and professional offices Commercial retail low intensity < 2,500 sq.ft Medical services.
- (HMDR) Single/two family residential units
- (HCL) Bussiness and professional offices. Commercial retail low and medium intensity (generate < 50 pm peak hour vehicle trips per 1,000 sf of gross leasable area). Restaurants, excluding drive-through facilities that generate < 50 pm peak hour vehicle trips per 1,000 sf of gross leasable floor area.
- (HRCC-4) Port and port related uses. Light industrial (marine related). Commercial retail low and medium intensity (Bicycle rental) < 5,000 sf.

Photographs of the existing site, surrounding land use and the approaches for the arterial streets are shown in Figure 2 through Figure 9.

ATEC
Advanced Transportation Engineering Consultants.

Figure 1: Study Location

Angela St at Fort St (2A)

Petronia St at Fort St (3A)

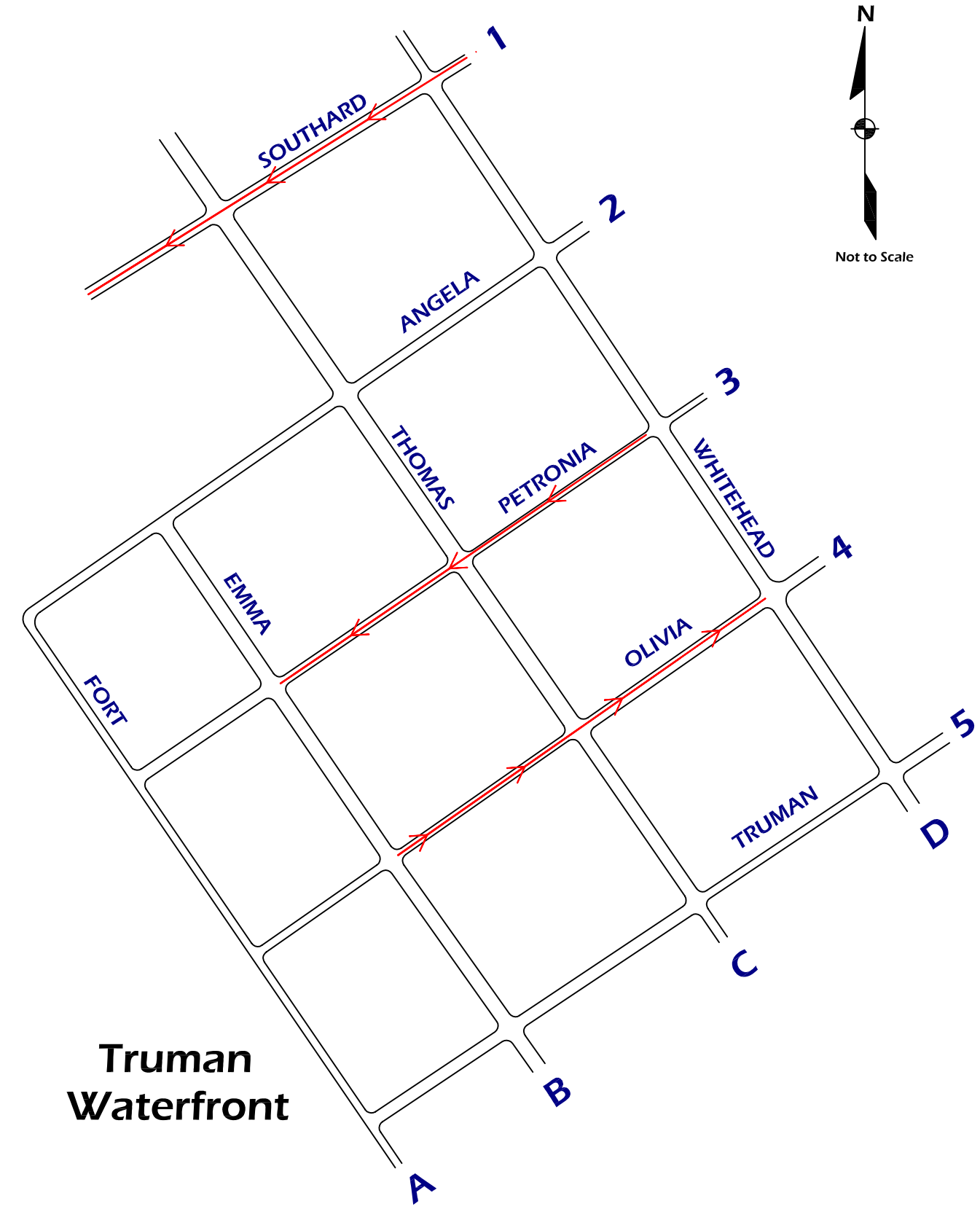

ATEC
Advanced Transportation Engineering Consultants.
12905 SW 42 St, Suite 209
Miami, Fl 33175
Phone: (305) 480-9938
Fax: (305) 480-9964

Figure 2: Study Photographs

Truman Waterfront
Evaluation of Project Traffic

Angela St at Emma St (2B)

Petronia St at Emma St (3B)

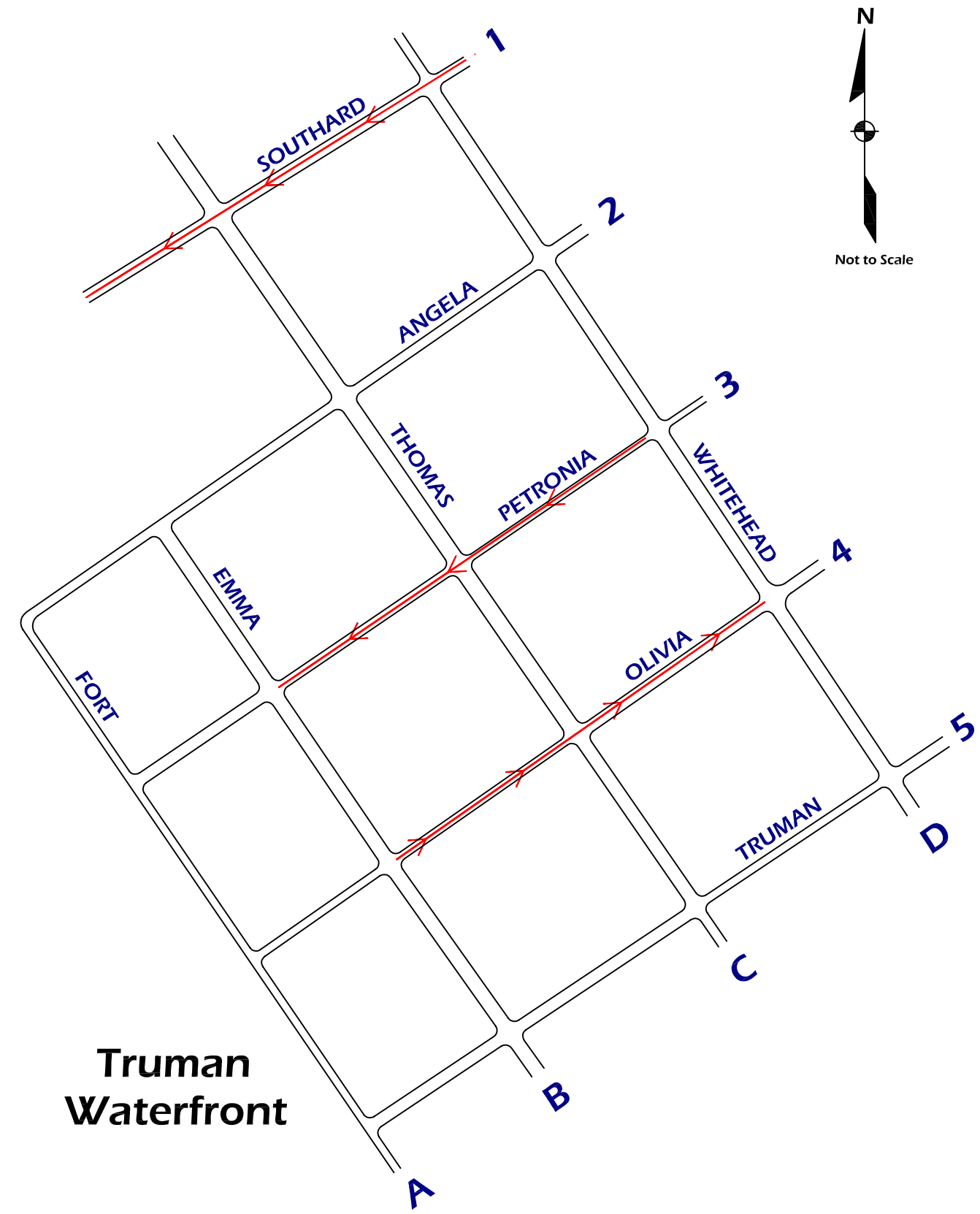

ATEC
Advanced Transportation Engineering Consultants.
12905 SW 42 St, Suite 209
Miami, Fl 33175
Phone: (305) 480-9938
Fax: (305) 480-9964

Figure 3: Study Photographs

Truman Waterfront
Evaluation of Project Traffic

Olivia St at Fort St (4A)

Truman St at Fort St (5A)

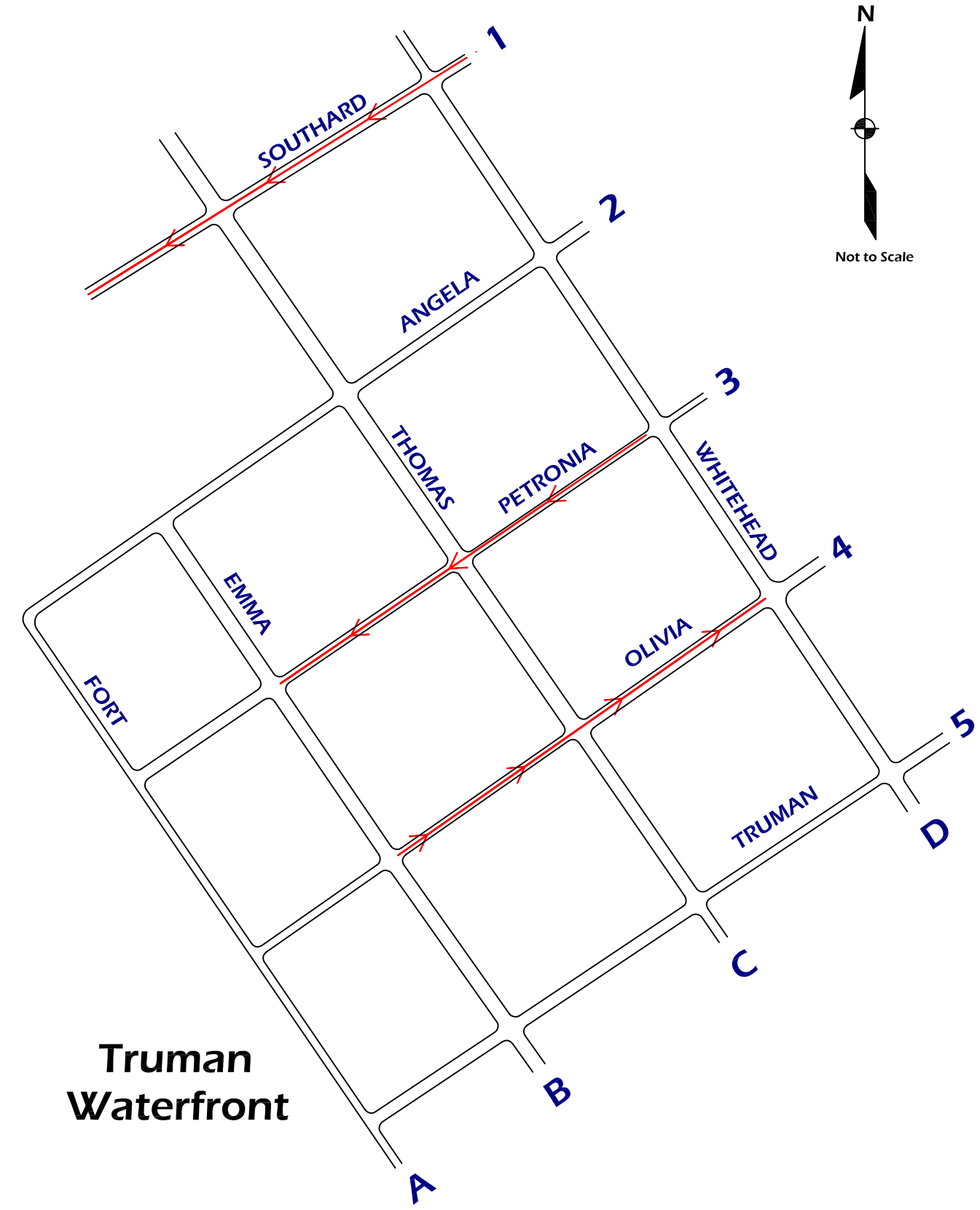

ATEC
Advanced Transportation Engineering Consultants.
12905 SW 42 St, Suite 209
Miami, Fl 33175
Phone: (305) 480-9938
Fax: (305) 480-9964

Figure 4: Study Photographs

Truman Waterfront
Evaluation of Project Traffic

Olivia St at Emma St (4B)

Truman St at Emma St (5B)

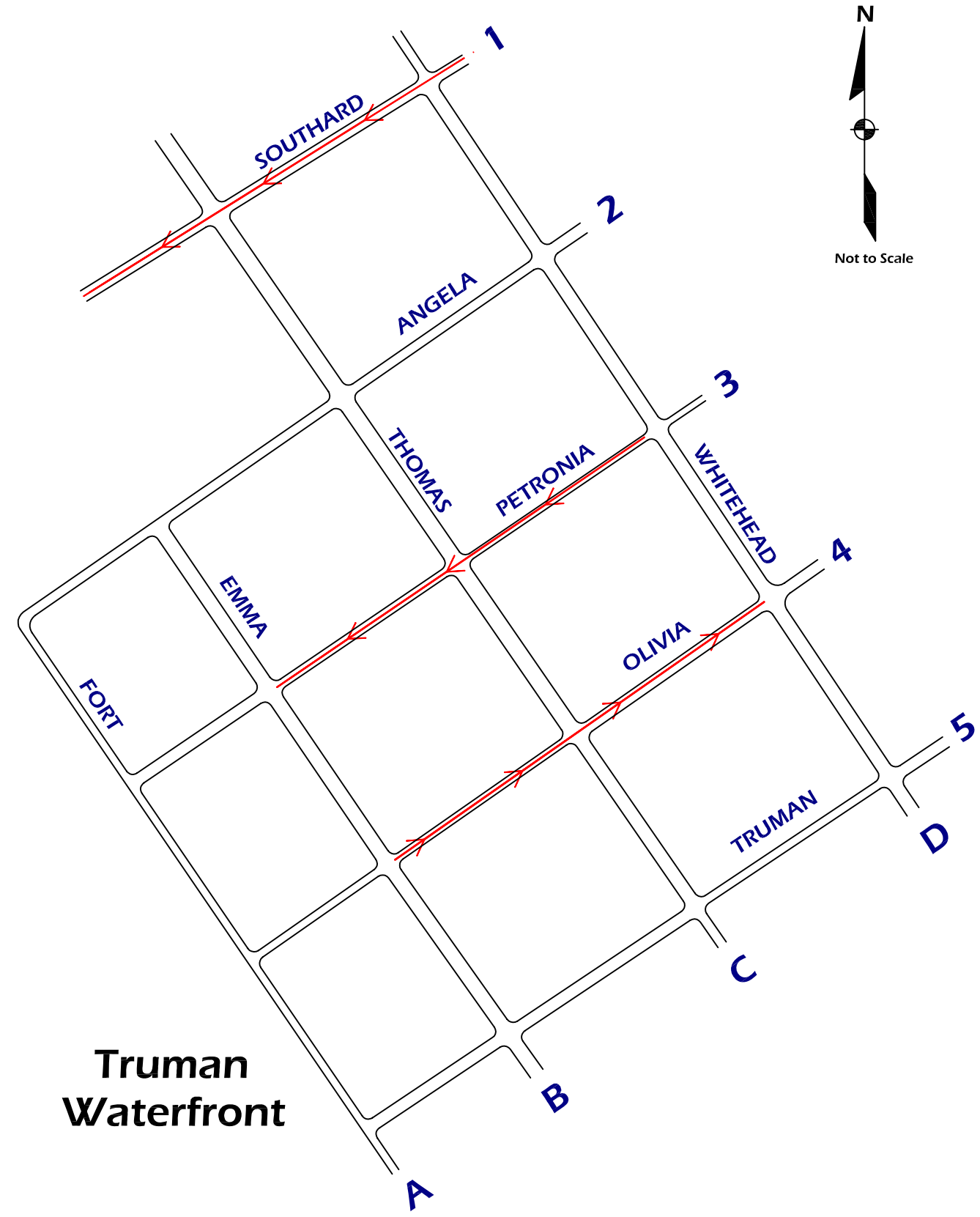

ATEC
Advanced Transportation Engineering Consultants.
12905 SW 42 St, Suite 209
Miami, Fl 33175
Phone: (305) 480-9938
Fax: (305) 480-9964

Figure 5: Study Photographs

Truman Waterfront
Evaluation of Project Traffic

Olivia St at Thomas St (4C)

Truman St at Tomas St (5C)

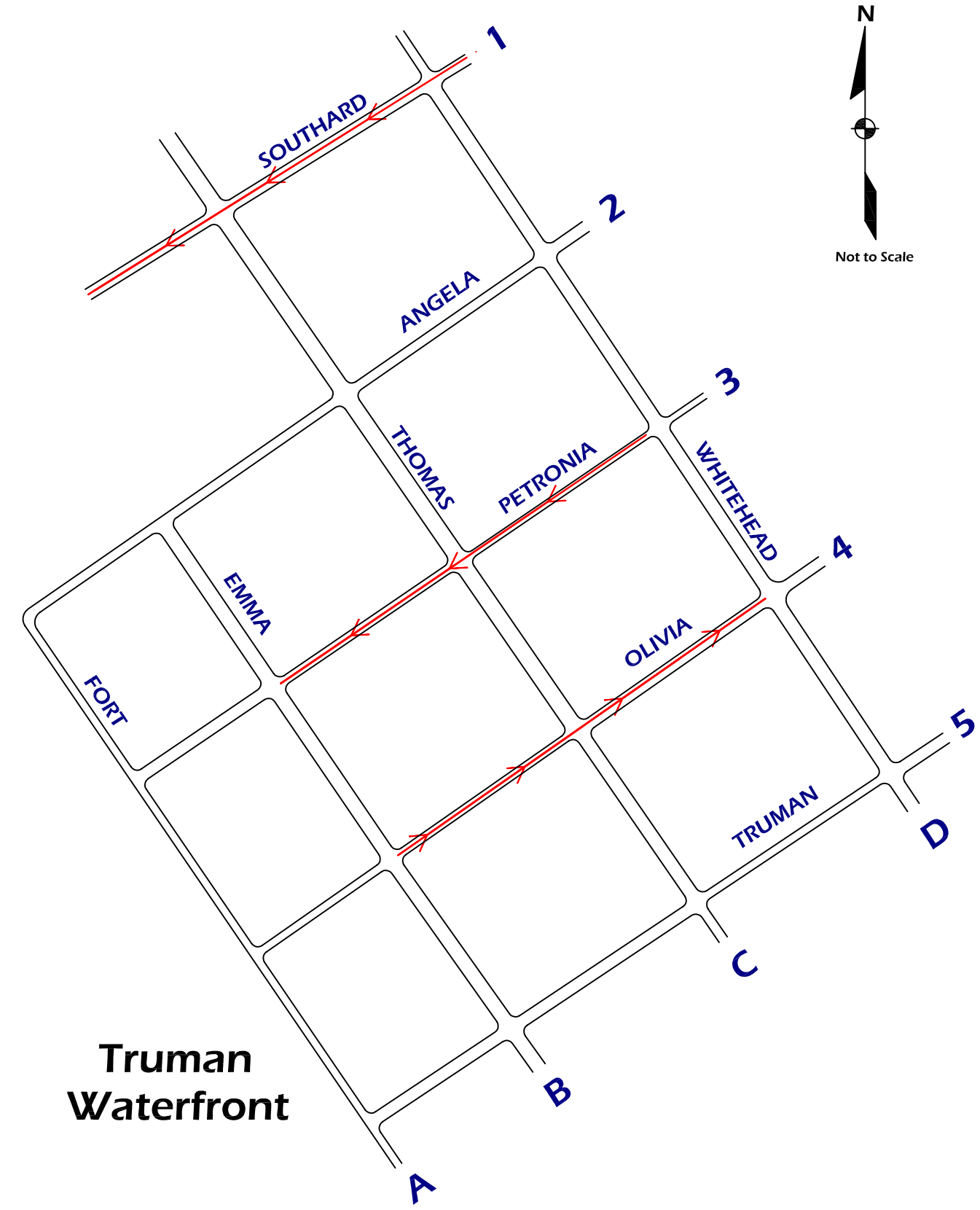

ATEC
Advanced Transportation Engineering Consultants.
12905 SW 42 St, Suite 209
Miami, Fl 33175
Phone: (305) 480-9938
Fax: (305) 480-9964

Figure 6: Study Photographs

Truman Waterfront
Evaluation of Project Traffic

Olivia St at Whitehead St (4D)

Truman St at Whitehead St (5D)

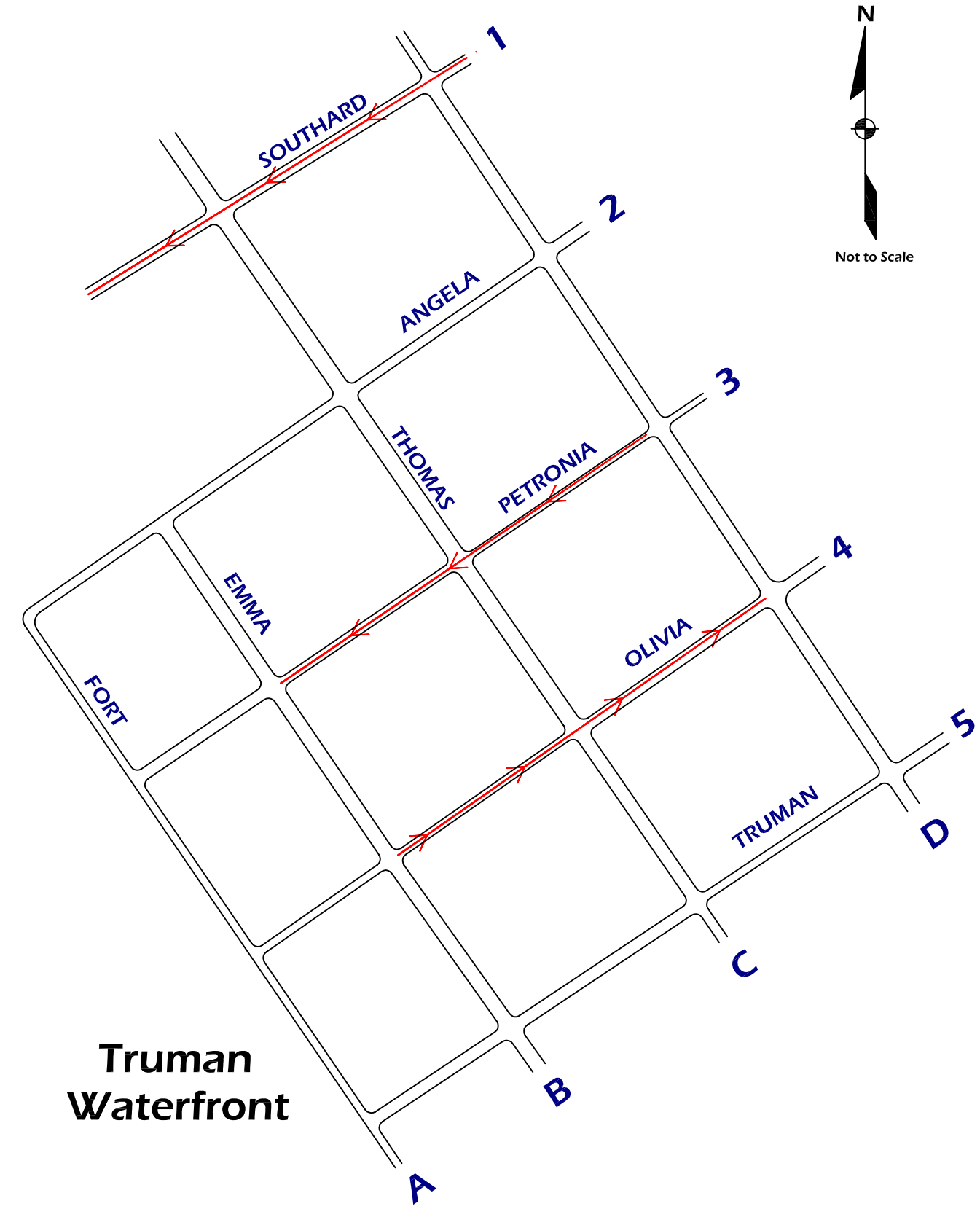

ATEC
Advanced Transportation Engineering Consultants.
12905 SW 42 St, Suite 209
Miami, Fl 33175
Phone: (305) 480-9938
Fax: (305) 480-9964

Figure 7: Study Photographs

Truman Waterfront
Evaluation of Project Traffic

Southard St and Thomas St (1C)

Angela St at Thomas St (2C)

Petronia St at Thomas St (3C)

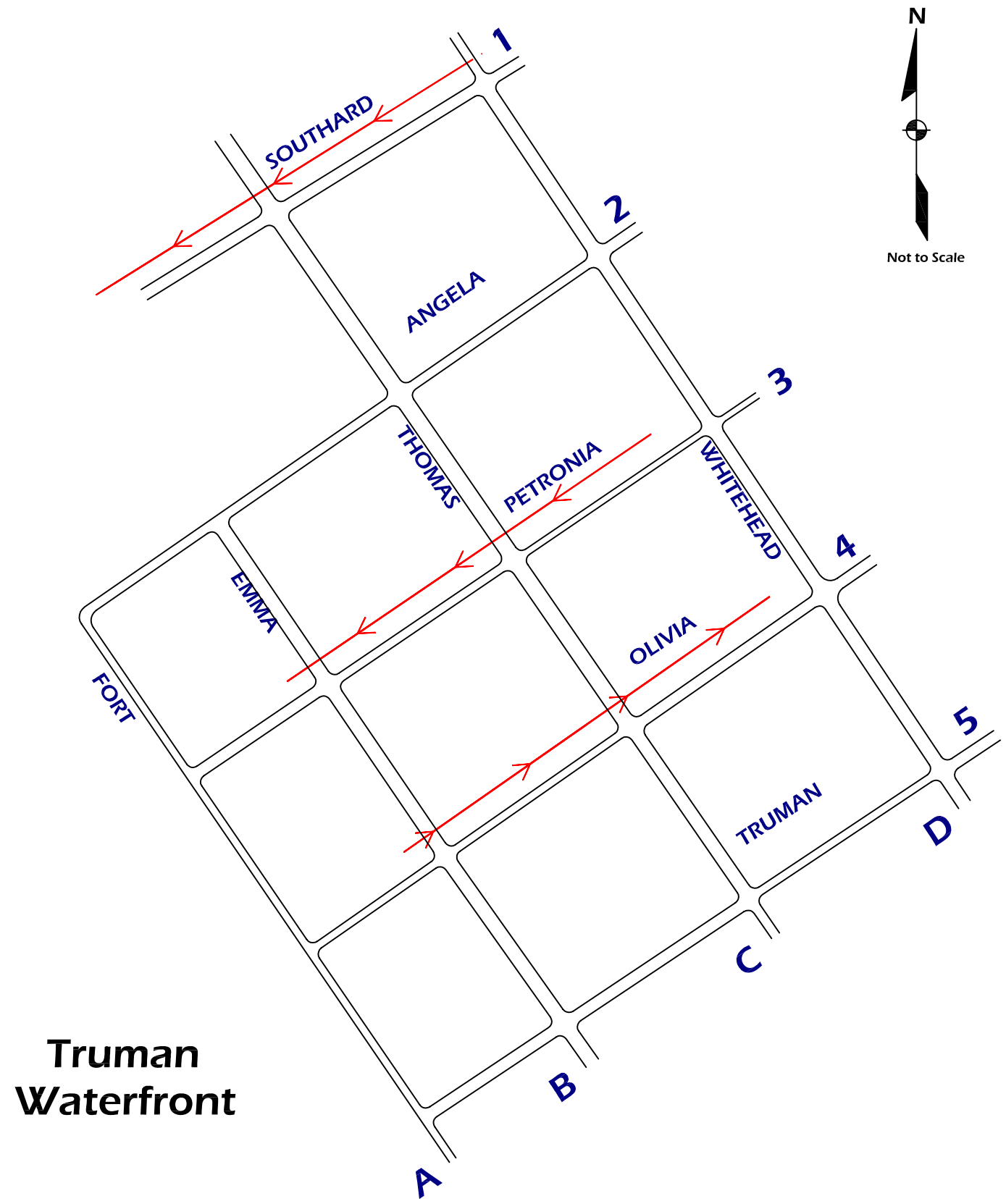

Truman Waterfront

ATEC Advanced Transportation Engineering Consultants.
12905 SW 42 St, Suite 209
Miami, Fl 33175
Phone: (305) 480-9938
Fax: (305) 480-9964

Figure 8: Study Photographs

Truman Waterfront
Evaluation of Project Traffic

Southard St at Whitehead St

Angela St at Whitehead St

Petronia St at Whitehead St

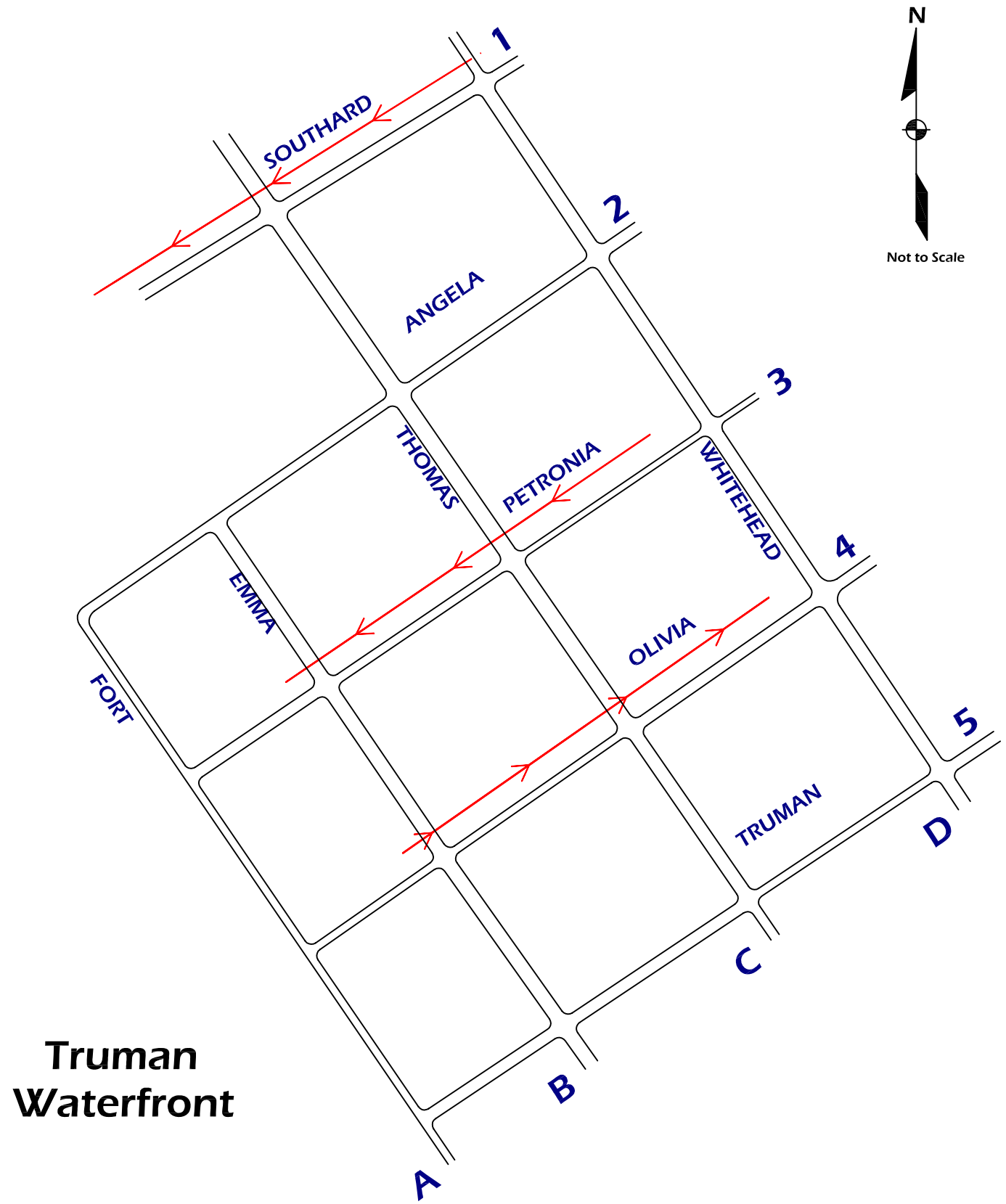

Truman Waterfront

ATEC Advanced Transportation Engineering Consultants.
12905 SW 42 St, Suite 209
Miami, Fl 33175
Phone: (305) 480-9938
Fax: (305) 480-9964

Figure 9: Study Photographs

3. Methodology

As part of this study a trip generation analysis based on the *Institute of Transportation Engineers (ITE), Trip Generation Report, 7th Edition* was performed to determine the daily trips, AM and PM Peak hour directional trips expected to be generated by the proposed development. The distribution of trips to the adjacent street network was performed taking into consideration the existing traffic volumes within the study area which reflect the current travel patterns in the area. That is, the number of trips assigned to each highway link was proportional to the current traffic volumes per direction. Furthermore, the traffic assignment considered the agreement between the City of Key West and the Truman Annex Homeowners Association (TAMPOA) which outlined the following conditions:

1. "The City shall provide ingress and egress by way of Fort Street through Olivia Street;
2. The City shall provide ingress through Petronia Street; and
3. The City shall provide ingress and egress by way of Truman Avenue to Fort Street."

In addition to trip generation and trip distribution/assignment, intersection level of service capacity analysis was performed at each of the intersections within the study area. This analysis was performed to assess the impacts of project traffic on the current intersection operations. The level of service analysis was performed based on the methodology outlined in the *2000 edition of Highway Capacity Manual.*

4. Analysis and Results

This section is comprised of four sub-sections. Sub-section 4.1 describes all of data collection activities. Section 4.2 describes the trip generation analysis followed by sub-section 4.3 which details the assignment of vehicles trips to the site and surrounding highway links. Sub-section 4.4 presents the Level of Service (LOS) analysis and impacts of the proposed development.

4.1. Data Collection

According to the Florida Department of Transportation's (FDOT) Transportation Statistics Office, the nearest count station is on Whitehead Street 100 feet south of Olivia Street. This segment of US 1 has an Average Annual Daily Traffic (AADT) of 8,300 vehicles per day. Also, the ratio of the traffic volume in the study hour to the annual average daily traffic (K factor), the directional distribution (D factor) and the truck factor (T) is 10.42%, 56.02% and 3.12%, respectively.

Turning Movement Counts were collected at 14 intersections within the study area during the AM peak period from 7:00 AM to 9:00 AM and during the 4:00 PM to 6:00 PM peak hour afternoon period. These counts were summarized and presented on Figure 10. The counts shown along Fort Street were estimated from the traffic entering and exiting Fort Street from Emma Street. Table 1 depicts all of the intersections within the study area and the type of intersection control. Seventy two (72) hours counts were conducted during the third week of December beginning on Tuesday December 20, 2005 through Thursday December 23, 2005. These data are needed to determine the non-pass by trip pattern in the vicinity of the study area as well as to

determine the distribution of local traffic. These volume counts are presented in Table 2. The raw counts are presented in Appendix A. It was assumed that for the purpose of this report Southard Street, Angela Street, Petronia Street, Oliva Street and Truman Avenue are running east and west; Whitehead Street, Thomas Street, Emma Street and Fort Street are running north and south.

Table 1 Intersection Control

Intersection			Intersection Control	
			Signal	Stop
Southard Street	at	Whitehead Street	X	
Southard Street	at	Thomas Street		X
Whitehead Street	at	Angela Street		X
Whitehead Street	at	Petronia Street		X
Whitehead Street	at	Olivia Street		X
Whitehead Street	at	Truman Avenue	X	
Truman Avenue	at	Thomas Street	X	
Truman Avenue	at	Emma Street		X
Olivia Street	at	Thomas Street		X
Olivia Street	at	Emma Street		X
Petronia Street	at	Emma Street		X
Petronia Street	at	Thomas Street	X	
Thomas Street	at	Angela Street		X
Angela Street	at	Emma Street		X

Table 2 Summary of 72-Hour Counts

Street	Between		EB	%	WB	%	NB	%	SB	%
Southard St	Whitehead St	Thomas St	1,777	4.1%	2,033	4.7%				
Whitehead St	Southard St	Angela St	-	-	-	-	2,817	6.5%	2,982	6.9%
Whitehead St	Angela St	Petronia St	-	-	-	-	2,860	6.6%	3,760	8.7%
Whitehead St	Petronia St	Olivia St	-	-	-	-	3,001	6.9%	3,039	7.0%
Whitehead St	Olivia St	Truman Ave.	-	-	-	-	2,948	6.8%	3,052	7.1%
Truman Ave.	Emma St	Thomas St	117	0.3%	96	0.2%	-	-	-	-
Emma St	Olivia St	Truman Ave.	-	-	-	-	671	1.6%	635	1.5%
Emma St	Petronia St	Olivia St	-	-	-	-	691	1.6%	1,167	2.7%
Thomas St	Southard St	Angela St	-	-	-	-	706	1.6%	910	2.1%
Thomas St	Angela St	Petronia St	-	-	-	-	1,080	2.5%	461	1.1%
Thomas St	Olivia St	Petronia St	-	-	-	-	607	1.4%	769	1.8%
Thomas St	Olivia St	Truman Ave	-	-	-	-	656	1.5%	692	1.6%
Angela St	Whitehead St	Thomas St	1,043	2.4%	560	1.3%	-	-	-	-
Angela St	Thomas St	Emma St	346	0.8%	577	1.3%	-	-	-	-
Olivia St	Emma St	Thomas St	676	1.6%	-	-	-	-	-	-
Olivia St	Thomas St	Whitehead St	504	1.2%	-	-	-	-	-	-
Petronia St	Emma St	Thomas St	-	-	901	2.1%	-	-	-	-
Petronia St	Thomas St	Whitehead St	-	-	1,140	2.6%	-	-	-	-
Emma St	Angela St	Petronia St	-	-	0	0.0%	577	1.3%	346	0.8%
Truman Ave.	Thomas St	Whitehead St	486	1.1%	324	0.7%	-	-	-	-

LEGEND

XX A.M. Peak Hour Volume
(XX) P.M. Peak Hour Volume
e Estimated
⇄ ADT

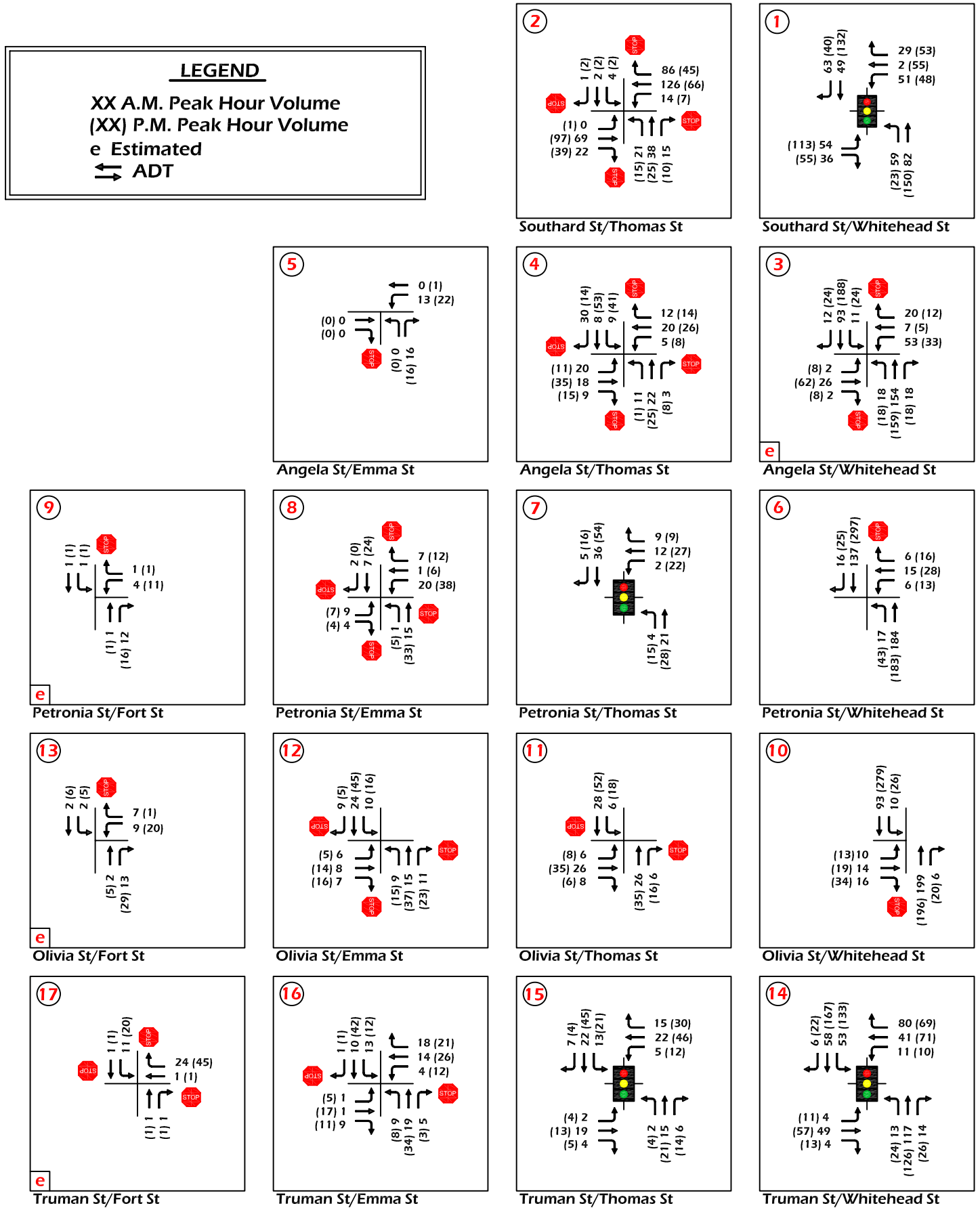

ATEC
Advanced Transportation Engineering Consultants.
12905 SW 42 St, Suite 209
Miami, Fl 33175
Phone: (305) 480-9938
Fax: (305) 480-9964

Figure 10: Existing Turning Movement Counts

Truman Waterfront Evaluation of Project Traffic

4.2. Trip Generation

The methodology outlined in the Institute of Transportation Engineers (ITE), Trip Generation 7th Edition was used to forecast traffic based on future land use. Daily trips and afternoon peak hour directional trips where estimated for the proposed land use.

Twenty-Six Acres of recreation and passive community centers is proposed for this site. Therefore, land use 415 (Beach Park Center) was used for this portion of the analysis. A regression equation, for estimating daily trips, was not available for this type of land use. However, an average rate is available and used for this type of land use.

$$T = 29.81(X) \tag{1}$$

The following average rate was used to estimate morning peak hour volume.

$$T = 0.48(X) \tag{2}$$

And,

The average rate for the afternoon peak hour is:

$$T = 1.30(X) \tag{3}$$

Where,

T = Number of Daily Trips, and
X = Acres

A total of 68,517 SF of commercial and professional was proposed for this project. Therefore, ITE land use 814 (Specialty Retail Center) was used for this analysis. The following regression equation, for estimating daily trips, was used for this type of land use.

$$T = 42.78(X) + 37.64 \qquad R^2 = 0.69 \tag{4}$$

The following regression equation was used to estimate morning peak hour volume.

$$T = 4.91(X) + 115.59 \qquad R^2 = 0.90 \tag{5}$$

The following rate was used to estimate afternoon peak hour volume.

$$T = 5.02(X) \tag{6}$$

Where,

T = Number of Daily Trips, and
X = 1000 Sq. Feet Gross Leasable Area (GLA).

ITE land use 210 (Single Family Detached) was used to estimate the trips generated by the proposed 36 affordable housing units (above commercial) within the site. The following regression equation, for estimating daily trips, was used for this type of land use.

$$Ln(T) = 0.92Ln(X) + 2.71 \qquad R^2 = 0.96 \qquad (7)$$

The following regression equation was used to estimate morning peak hour volume.

$$Ln(T) = 0.70Ln(X) + 12.05 \qquad R^2 = 0.91 \qquad (8)$$

The following regression equation was used to estimate afternoon peak hour volume.

$$Ln(T) = 0.89Ln(X) + 0.61 \qquad R^2 = 0.91 \qquad (9)$$

Where,

T = Number of Daily Trips, and
X = Number of Housing Units

There are fifty group homes of no more that six persons per home are proposed for this development. Therefore, ITE land use 254 (Assisted Living) was used for this analysis assuming a maximum of 50 beds. The following regression equation, for estimating daily trips, was used for this type of land use.

$$T = 1.61(X) + 132.16 \qquad (10)$$

The following rate was used to estimate future project traffic for the am peak period.

$$T = 0.18(X) \qquad (11)$$

The following regression equation was used to estimate afternoon peak hour volume.

$$T = 0.27(X) + 12.83 \qquad (12)$$

Where,

T = Number of Daily Trips, and
X = Number of Beds.

The proposed Marina will allow a maximum of 200 boat slips. ITE land use 420 (Marina) was used for this analysis assuming a maximum of 200 berths. The following regression equation, for estimating daily trips, was used for this type of land use.

$$T = 1.89(X) + 410.80 \quad (13)$$

The following average rate was used to estimate afternoon peak hour volume.

$$T = 0.17(X) \quad (14)$$

The following average rate was used to estimate afternoon peak hour volume.

$$T = 0.21(X) \quad (15)$$

Where,

T = Number of Daily Trips, and
X = Number of Berths.

Table 3 summarizes the results of the trip generation.

Since this is a multi-use development internal capture trips were estimated and discounted from the project trips. The proposed land uses are interrelated and some of the attracted trips will make trips between land uses without using the adjacent roadway network.

Pass-by trips were also accounted for in the calculation of project trip generation. Pass-by trips are trips already on the roadway system that would stop at the project site on an already planned trip.

In addition to vehicles, there are other modes of transportation available in the immediate area such as transit service and pedestrian facilities. It is expected that these modes of transportation will be used in conjunction with vehicles trips to the development.

To account for Internal Capture, Pass-By and Transit/Pedestrian facilities a 10 % reduction was used and discounted from the projected trips. Due the lack of established rates for these reductions a 10% reduction was assumed. Table 3 shows the reduction of these trips for the total daily trips and Table 4 shows the eduction for both peak periods.

Table 3 Results of Trip Generation

ITE Land Use	Unit	Size	AM Peak Hour	PM Peak Hour	Weekday (Trips)
Beach Park (415)	Acre	26.6	13	35	793
Specialty Retail (814)	1000	68.5	452	344	2,969
Assisted Living (254)	Beds	50	9	26	213
Single-Family Detached Housing (210)*	Units	36	37	45	406
Marina (420)	Berths	200	34	42	789
Sub-Total	-	-	545	492	5,169
Internal Capture (10%)	-	-	-55	-49	-517
Pass-by Trips (10%)	-	-	-55	-49	-517
Transit and Pedestrian (10%)	-	-	-55	-49	-517
Adjusted Total	-	-	382	344	3,619

* This ITE land use was used as a surrogate for 36 affordable housing units

4.3. Trip Distribution

The AM and PM peak hour project trip distributions are shown on Figure 11. The total, existing plus project traffic, are presented on Figure 12. Trips generated by the proposed project were assigned to the roadway system based on the percentages of entering and exiting as outlined in *The Institute of Transportation Engineers (ITE), Trip Generation Report, 7th Edition* for each land use as summarized in Table 4. The location of project entrance points and the location of available parking within the site were also taken into consideration in the assignment of project trips. The majority of the trips will enter through Petronia Street and exit through Olivia Street.

Table 4 Adjusted Peak Period Volumes

ITE Land Use	AM Peak Hour				PM Peak Hour			
	% Entering	Trips Entering	% Exiting	Trips Exiting	% Entering	Trips Entering	% Exiting	Trips Exiting
Beach Park (415)	59%	5	41%	4	29%	7	71%	17
Specialty Retail (814)	48%	152	52%	165	56%	135	44%	106
Assisted Living (254)	67%	4	33%	2	36%	7	64%	12
Single-Family Detached Housing (210)*	26%	7	74%	19	64%	20	36%	11
Marina (420)	64%	15	36%	9	51%	15	49%	14
Adjusted Total	-	183	-	198	-	183	-	161

* This ITE land use was used as a surrogate for 36 affordable housing units

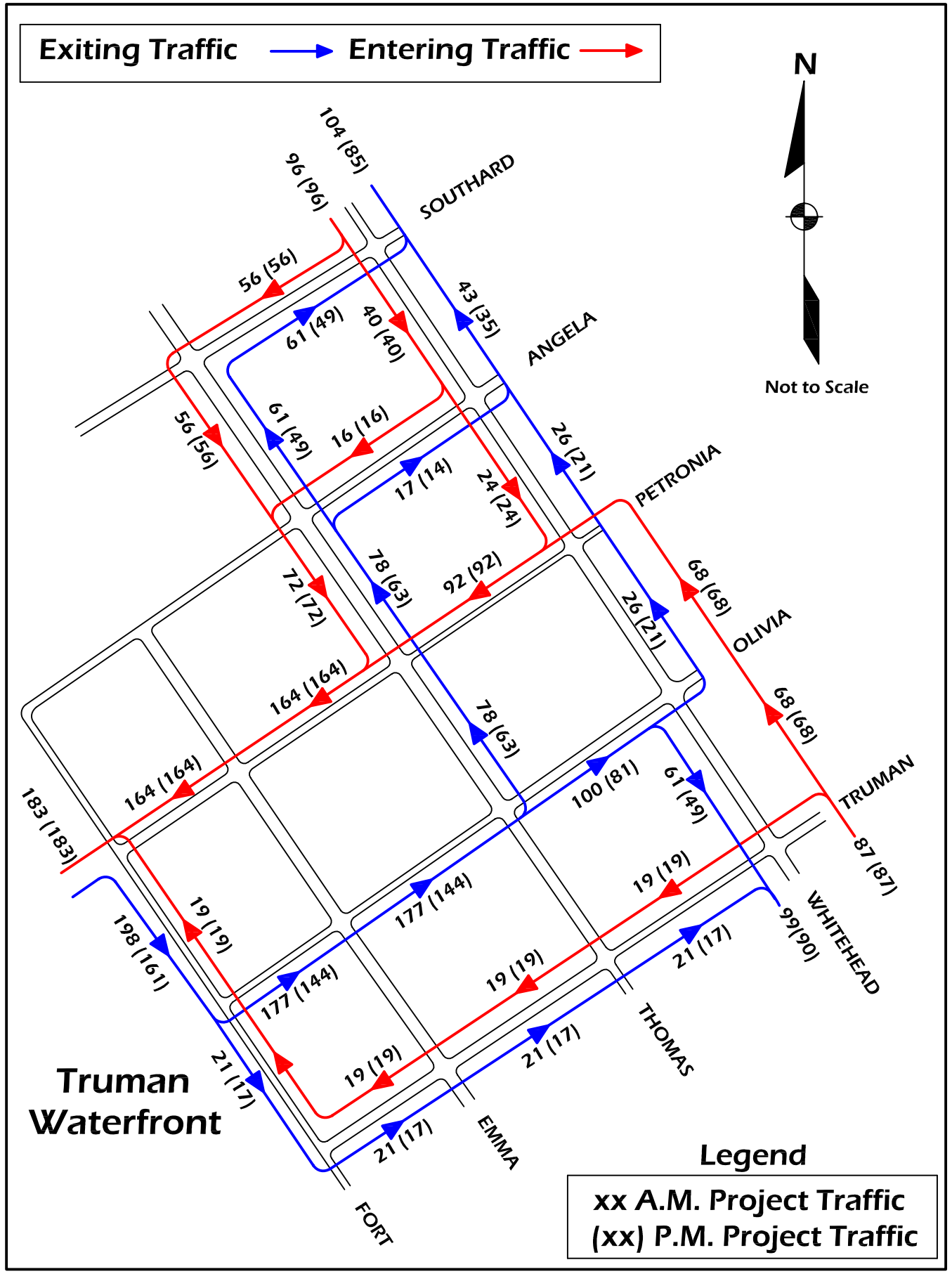

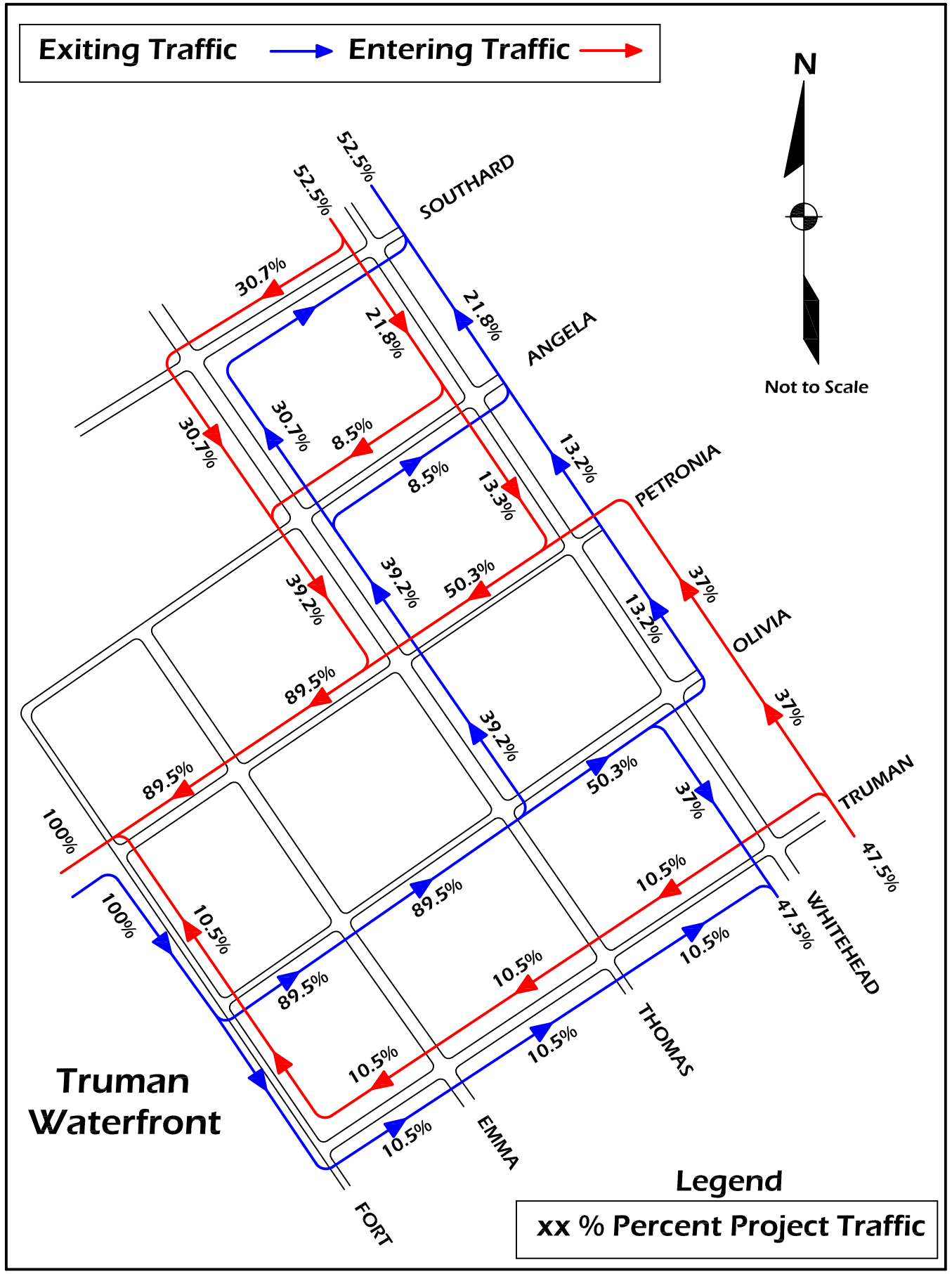

ATEC
Advanced Transportation Engineering Consultants, Inc.
12905 SW 42 St, Suite 209
Miami, Fl 33175
Phone: (305) 480-9938
Fax: (305) 480-9964

Figure 11: Project Trip Distribution

Truman Waterfront
Evaluation of Project Traffic

LEGEND

XX A.M. Peak Hour Volume
(XX) P.M. Peak Hour Volume
e Estimated
⇄ ADT

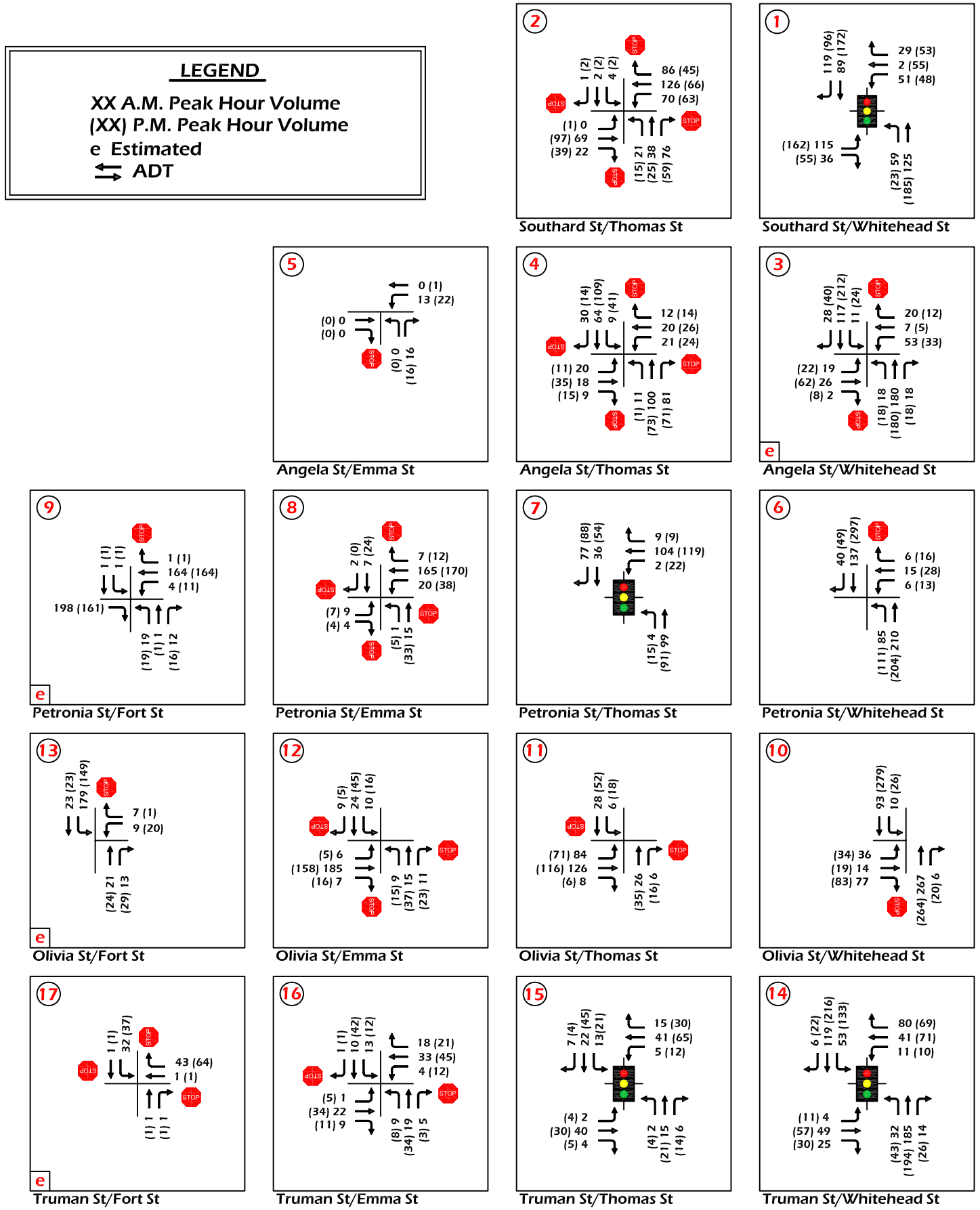

ATEC
Advanced Transportation Engineering Consultants.
12905 SW 42 St, Suite 209
Miami, Fl 33175
Phone: (305) 480-9938
Fax: (305) 480-9964

Figure 12: Future Turning Movement Counts

Truman Waterfront Evaluation of Project Traffic

4.4. Level of Service Analysis

Level of Service Analysis was performed for all of the intersections within the study area, un-signalized and signalized. Table 5 summarizes the Level of Service (LOS) criteria for un-signalized and signalized intersections.

Table 5 Intersection Level of Service Criteria (Based on HCM 2000, TRB, 2000)

LOS	Un-Signalized Intersection (Ave. Control Delay s/veh)	Signalized Intersection (Ave. Control Delay s/veh)
A	0–10	0-10
B	>10-15	>10 – 20
C	>15-25	>20 – 35
D	>25-35	>35 – 55
E	>35-50	>55 – 80
F	>50	> 80

Traffic operations at un-signalized intersections using the Highway Capacity Manual 2000 methodology for un-signalized intersections were utilized. With this methodology, operations are defined by the average control delay per vehicle for each stop-controlled movement. This incorporates delay associated with deceleration, acceleration, stopping, and moving up in the queue. For side-street stop-controlled intersections, the delay is typically represented for each movement from the minor approaches only. Table 6 and 7 shows the level of service results for the stopped approach under the existing and future prevailing traffic conditions, respectively. For the purpose of this report Southard Street, Angela Street, Petronia Street, Oliva Street and Truman Avenue are running east and west. Also, Whitehead Street, Thomas Street, Emma Street and Fort Street are running north and south.

Table 6 Summary of LOS for Stopped Approach at Un-Signalized Intersection (Existing)

Un-Signalized Intersection			Stopped Approach LOS							
			EB		WB		NB		SB	
			AM	PM	AM	PM	AM	PM	AM	PM
Southard Street	at	Thomas Street	A	A	A	A	A	A	A	A
Whitehead	at	Angela Street	B	C	B	C	-	-	-	-
Whitehead Street	at	Petronia Street	-	-	B	C	-	-	-	-
Whitehead Street	at	Olivia Street	B	B	-	-	-	-	-	-
Truman Avenue	at	Emma Street	-	-	-	-	B	B	B	B
Olivia Street	at	Thomas Street	-	-	-	-	B	B	B	B
Olivia Street	at	Emma Street	A	A	-	-	A	A	A	A
Petronia Street	at	Emma Street	A	A	A	A	A	A	A	A
Thomas Street	at	Angela Street	A	A	A	A	A	A	A	A
Angela Street	at	Emma Street	-	-	-	-	A	A	-	-
Truman Avenue	at	Fort Street	-	-	A	A	A	A	A	A
Olivia Street	at	Fort Street	-	-	A	A	-	-	-	-
Petronia Street	at	Fort Street	-	-	A	A	-	-	-	-

Table 7 Summary of LOS for Stopped Approach at Un-Signalized Intersection (Future)

Un-Signalized Intersection			Stopped Approach LOS							
			EB		WB		NB		SB	
			AM	PM	AM	PM	AM	PM	AM	PM
Southard Street	at	Thomas Street	A	A	A	A	A	A	A	A
Whitehead	at	Angela Street	C	C	C	C	-	-	-	-
Whitehead Street	at	Petronia Street	-	-	C	C	-	-	-	-
Whitehead Street	at	Olivia Street	B	C	-	-	-	-	-	-
Truman Avenue	at	Emma Street	-	-	-	-	B	B	B	B
Olivia Street	at	Thomas Street	-	-	-	-	B	B	C	C
Olivia Street	at	Emma Street	A	A	-	-	A	A	A	A
Petronia Street	at	Emma Street	A	A	A	A	A	A	A	A
Thomas Street	at	Angela Street	A	A	A	A	A	A	A	A
Angela Street	at	Emma Street	-	-	-	-	A	A	-	-
Truman Avenue	at	Fort Street	-	-	A	A	A	A	A	A
Olivia Street	at	Fort Street	-	-	B	B	-	-	-	-
Petronia Street	at	Fort Street	B	B	B	B	-	-	-	-

At signalized intersections, traffic conditions were evaluated using the Highway Capacity Manual 2000 methodology. This operation analysis uses various intersection characteristics (i.e., traffic volumes, lane geometry, and signal phasing) to estimate the average control delay experienced by motorists traveling through an intersection. Table 8 through 11 shows the results of the level of service for the existing and future traffic levels, respectively.

Table 8 Summary of LOS for Signalized Intersection (AM Existing)

Signalized Intersection			Int	Approach LOS				Approach Delay (s/veh)			
			LOS	EB	WB	NB	SB	EB	WB	NB	SB
Southard Street	at	Whitehead St.	B	B	B	B	A	15.3	15.6	10.9	9.5
Whitehead Street	at	Truman Avenue	B	A	B	B	B	9.2	10	11.5	10.9
Truman Avenue	at	Thomas Street	A	A	A	A	A	7.5	7.7	7.4	7.9
Petronia Street	at	Thomas Street	A	-	A	A	A	-	8.5	8.7	9

Table 9 Summary of LOS for Signalized Intersection (PM Existing)

Signalized Intersection			Int	Approach LOS				Approach Delay (s/veh)			
			LOS	EB	WB	NB	SB	EB	WB	NB	SB
Southard Street	at	Whitehead St.	B	B	B	B	B	18.6	17.9	11.0	10.7
Whitehead Street	at	Truman Avenue	B	A	B	B	C	9.6	10.5	13.0	26.2
Truman Avenue	at	Thomas Street	A	A	A	A	A	7.3	8.3	7.6	8.4
Petronia Street	at	Thomas Street	A	-	A	A	A	-	9.1	9.1	9.4

Table 10 Summary of LOS for Signalized Intersection (AM Future)

Signalized Intersection			Int	Approach LOS				Approach Delay (s/veh)			
			LOS	EB	WB	NB	SB	EB	WB	NB	SB
Southard Street	at	Whitehead St.	B	B	B	B	A	18.1	15.6	12.0	11.0
Whitehead Street	at	Truman Avenue	B	A	B	B	B	9.2	10.0	15.4	12.5
Truman Avenue	at	Thomas Street	A	A	A	A	A	7.5	8.1	7.4	7.9
Petronia Street	at	Thomas Street	B	-	B	B	B	-	10.5	10.6	10.1

Table 11 Summary of LOS for Signalized Intersection (PM Future)

Signalized Intersection			Int	Approach LOS				Approach Delay (s/veh)			
			LOS	EB	WB	NB	SB	EB	WB	NB	SB
Southard Street	at	Whitehead St.	B	C	B	B	B	22.2	17.9	11.8	12.9
Whitehead Street	at	Truman Avenue	C	A	B	C	D	9.8	10.5	19.6	41.3
Truman Avenue	at	Thomas Street	A	A	A	A	A	7.3	8.8	7.6	8.5
Petronia Street	at	Thomas Street	B	-	B	B	B	-	10.9	10.3	10.3

5. Conclusions and Recommendations

The total trips generated by the proposed development are 3,619 new vehicles trips per day, 382 vehicles and 344 vehicles during the morning and afternoon peak hour, respectively. These trips will be attracted by the proposed development. Below is a summary of the findings and recommendations.

1. Currently all of the un-signalized intersections are operating at level of service C or better for the stopped approach during the morning and afternoon peak periods under existing traffic conditions. However, most are operating at level of service A. All of the signalized intersections are operating at level of service C or better during both peak periods.

2. The analysis did not reveal a discernable difference between the existing and proposed traffic levels for the un-signalized intersections of Southard Street at Thomas Street, Olivia Street at Emma Street, Petronia Street at Emma Street, Thomas Street at Angela Street and Truman Avenue at Fort Street. In terms of overall intersection level of service

there is virtually no difference between the existing and future traffic conditions. However, some of the approaches experience minor degradation of approach delay or a slight increase in delay. Please note that the intersection level of service is based on the evaluation of each intersection individually and does not take into account the overall effect within the entire study area. Therefore, we recommend using a microsimulation traffic analysis tool which will allow for a network analysis rather than isolated intersections. This analysis will allow the evaluation of queues at each of the intersections within the study area. This is a key aspect that should be further evaluated due to the potential impacts of significant queuing on residential streets.

3. The geometry on Truman Avenue Between Emma Street and Thomas Street is constrained since there is approximately 18 feet of pavement for two-way traffic. In addition, on street parking is provided on the west side of the street. Even though two-way traffic is allowed on this portion of Truman Avenue, our field observations revealed that it currently operates as a one-way street since vehicular two-way traffic can not be accommodated within the current lane widths. Therefore, we recommend converting Truman Avenue between Emma Street and Thomas Street into a one-way street in the westbound direction toward Front Street.

4. Petronia Street should be converted from two-way traffic to one-way operation in the westbound direction between Fort Street and Emma Street. This improves the efficiency of the ingress operation of the development.

5. Consideration should be given to changing the intersection control from all-way stop to two-way stop control for the intersection of Angela Street at Thomas Street stopping east-west traffic on Angela Street. Also, the all-way stop control at the intersections of Petronia Street at Emma Street and Olivia Street at Emma Street should also be considered for two-way stop control stopping north-south traffic on Emma Street. Additional study to evaluate the appropriate traffic control device for these intersections is recommended.

6. The four signalized intersections within the study area should be retimed to accommodate the additional project traffic. The intersections are Southard Street at Whitehead Street, Petronia Street at Thomas Street, Truman Avenue at Thomas Street and Truman Avenue at Whitehead Street.

7. Consideration should be given to a more in-depth assessment of existing transit service and pedestrian facilities. This assessment will identify the need for improvements in transit service and pedestrian facilities which may result in a reduction of vehicular traffic.

8. As a general note, all of the streets within the study area are narrow and appear to have sub-standard roadway design features. These streets should be evaluated and improved from a geometric standpoint wherever possible. Therefore, we recommend an exhaustive evaluation of the existing geometric conditions. One key aspect that should be further

investigating is the necessary turning radii to accommodate additional transit vehicles within the study area.

January, 2006

Traffic Impact Study

Study Location: Truman Waterfront

Prepared for City of Key West

Engineer's Certification

I Javier S. Gonzalez, certify that I currently hold on active Professional Engineer's License in the State of Florida and am competent through education and experience to provide engineering services in the civil and traffic engineering disciplines contained in this report. I further certify that this report was prepared by me or under my responsible charge as defined in Chapter 61G15-18.001 F.A.C. and that all statements, conclusions and recommendations made herein are true and correct to the best of my knowledge and ability.

PROJECT: **Traffic Impact Study**
LOCATION: **Truman Waterfront**

Javier S. Gonzalez
PE 49432

TABLE OF CONTENTS

SECTION **PAGE**

1. Introduction 1
2. Study Location and Proposed Development 1
3. Methodology 11
4. Analysis and Results 11
   4.1. Data Collection 11
   4.2. Trip Generation 14
   4.3. Trip Distribution 17
   4.4. Level of Service Analysis 20
5. Conclusions and Recommendations 22

LIST OF TABLES

TABLE **PAGE**

Table 1 Intersection Control 12
Table 2 Results of 72-Hour Counts 12
Table 3 Results of Trip Generation 17
Table 4 Adjusted Peak Period Volumes 17
Table 5 Intersection Level of Service Criteria 20
Table 6 Summary of LOS for Stopped Approach at Un-Signalized Intersection (Existing) 20
Table 7 Summary of LOS for Stopped Approach at Un-Signalized Intersection (Future) 21
Table 8 Summary of LOS for Signalized Intersection (AM Existing) 21
Table 9 Summary of LOS for Signalized Intersection (PM Existing) 22
Table 10 Summary of LOS for Signalized Intersection (AM Future) 22
Table 11 Summary of LOS for Signalized Intersection (PM Future) 22

LIST OF FIGURES

Figure 1 Study Location 2
Figure 2 Study Photographs 3
Figure 3 Study Photographs 4
Figure 4 Study Photographs 5
Figure 5 Study Photographs 6
Figure 6 Study Photographs 7
Figure 7 Study Photographs 8
Figure 8 Study Photographs 9
Figure 9 Study Photographs 10
Figure 10 Existing Turning Movement Counts 13
Figure 11 Trip Distribution 18
Figure 12 Future Turning Movement Counts 19

APPENDIX

Appendix A - Turning Movement Counts
Appendix B - 72-Hour Bi-directional Volume Counts
Appendix C - Existing Level of Service
Appendix D - Future Level of Service

1. Introduction

G. M. Selby and Associates, Inc. in association with Advanced Transportation Engineering Consultants, Inc were retained by the City of Key West to perform a traffic impact study for the Truman Waterfront Development. This is a multi-use development on 33 Acres of former US Navy property. The purpose of this study is to assess the traffic impacts of the proposed new development on the surrounding neighborhood streets.

2. Study Location and Proposed Development

The study area defined for this analysis is bound by Southard Street on the northwest, Truman Avenue on the southeast, Whitehead Street on northeast and Fort Street on the southeast. The study area encompasses almost the entire area known as Bahama Village and abuts the area known as Truman Annex. The nearest major principal highway is SR 5/ US1/ Whitehead Street. Figure 1 depicts an aerial photograph of the study location. The Truman Waterfront Project includes the developing of the entire site into five zoning categories Historic Public Semi-Public District (HPS-1), Historic Neighborhood Commercial District (HNC-2), Historic Medium Density Residential District-1 (HMDR-1), Historic Limited Commercial (HCL) and Truman Waterfront Distric (HRCC-4) as follows:

- (HPS-1) Harborwalk-Parks and recreation, passive and active Community centers
- (HNC-2) Single/two family residential unitsBusiness and professional offices Commercial retail low intensity < 2,500 sq.ft Medical services.
- (HMDR) Single/two family residential units
- (HCL) Bussiness and professional offices. Commercial retail low and medium intensity (generate < 50 pm peak hour vehicle trips per 1,000 sf of gross leasable area). Restaurants, excluding drive-through facilities that generate < 50 pm peak hour vehicle trips per 1,000 sf of gross leasable floor area.
- (HRCC-4) Port and port related uses. Light industrial (marine related). Commercial retail low and medium intensity (Bicycle rental) < 5,000 sf.

Photographs of the existing site, surrounding land use and the approaches for the arterial streets are shown in Figure 2 through Figure 9.

ATEC
Advanced Transportation Engineering Consultants.

Figure 1: Study Location

Angela St at Fort St (2A)

Petronia St at Fort St (3A)

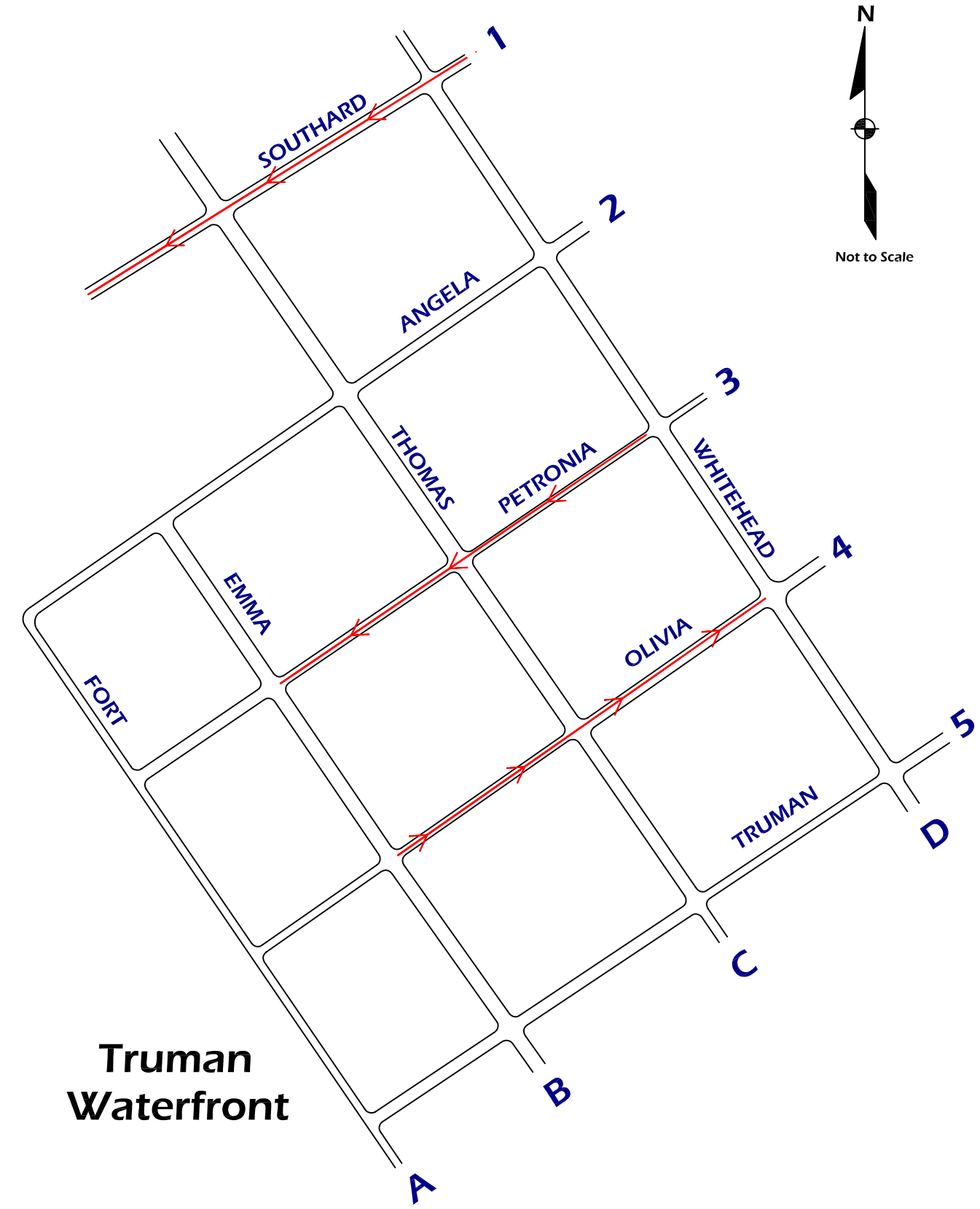

ATEC
Advanced Transportation Engineering Consultants.
12905 SW 42 St, Suite 209
Miami, Fl 33175
Phone: (305) 480-9938
Fax: (305) 480-9964

Figure 2: Study Photographs

Truman Waterfront
Evaluation of Project Traffic

Angela St at Emma St (2B)

Petronia St at Emma St (3B)

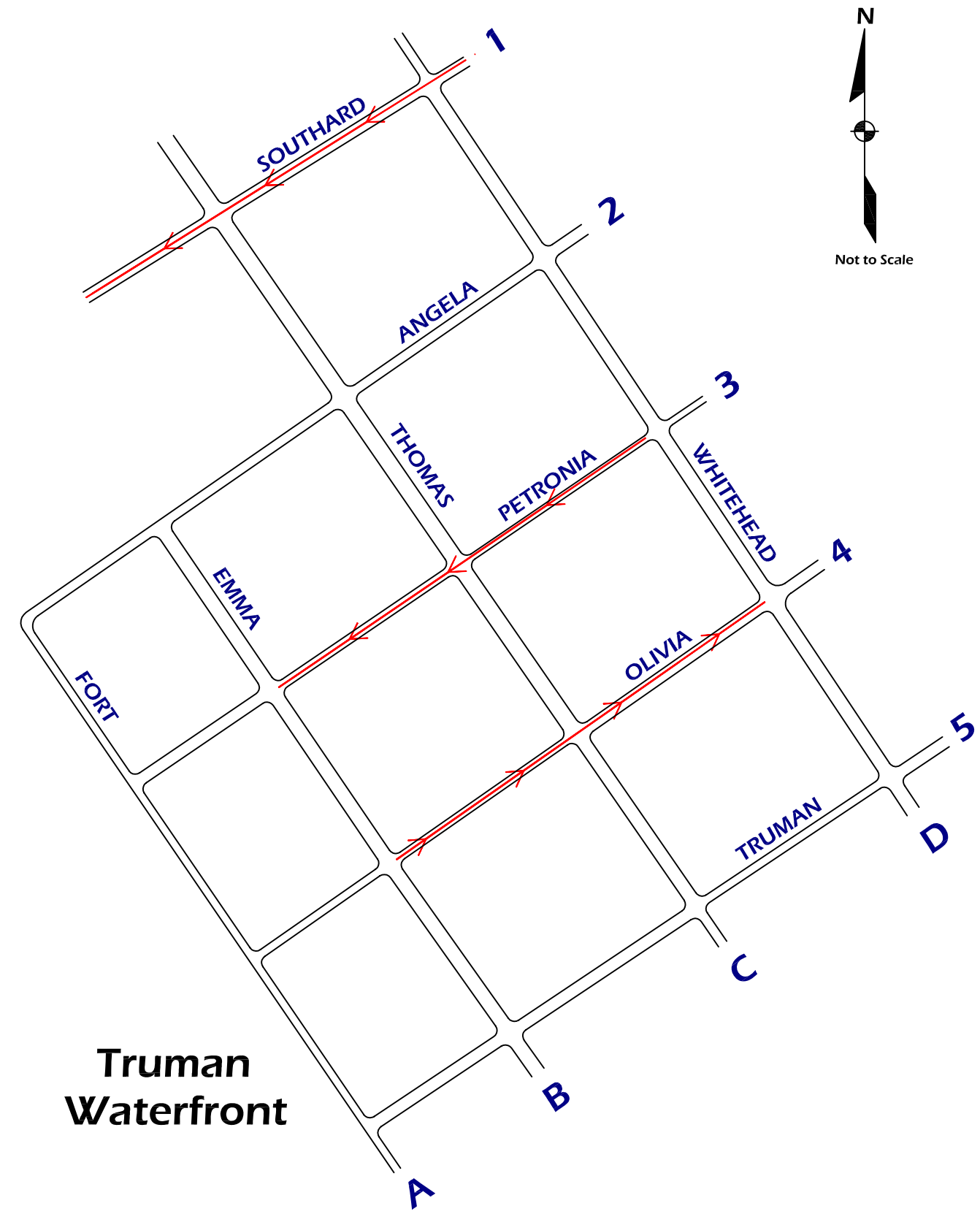

ATEC
Advanced Transportation Engineering Consultants.
12905 SW 42 St, Suite 209
Miami, Fl 33175
Phone: (305) 480-9938
Fax: (305) 480-9964

Figure 3: Study Photographs

Truman Waterfront
Evaluation of Project Traffic

Olivia St at Fort St (4A)

Truman St at Fort St (5A)

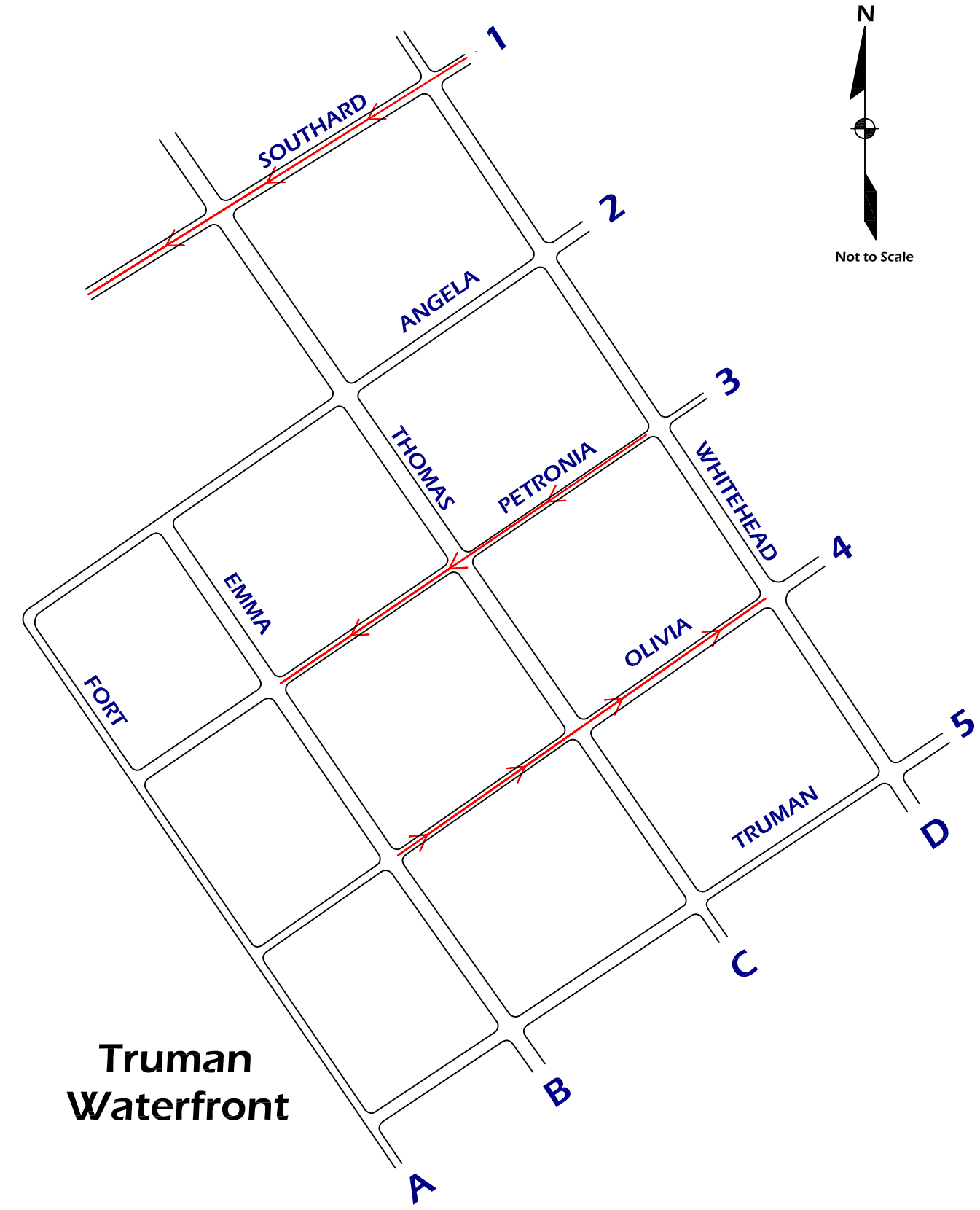

ATEC
Advanced Transportation Engineering Consultants.
12905 SW 42 St, Suite 209
Miami, Fl 33175
Phone: (305) 480-9938
Fax: (305) 480-9964

Figure 4: Study Photographs

Truman Waterfront
Evaluation of Project Traffic

Olivia St at Emma St (4B)

Truman St at Emma St (5B)

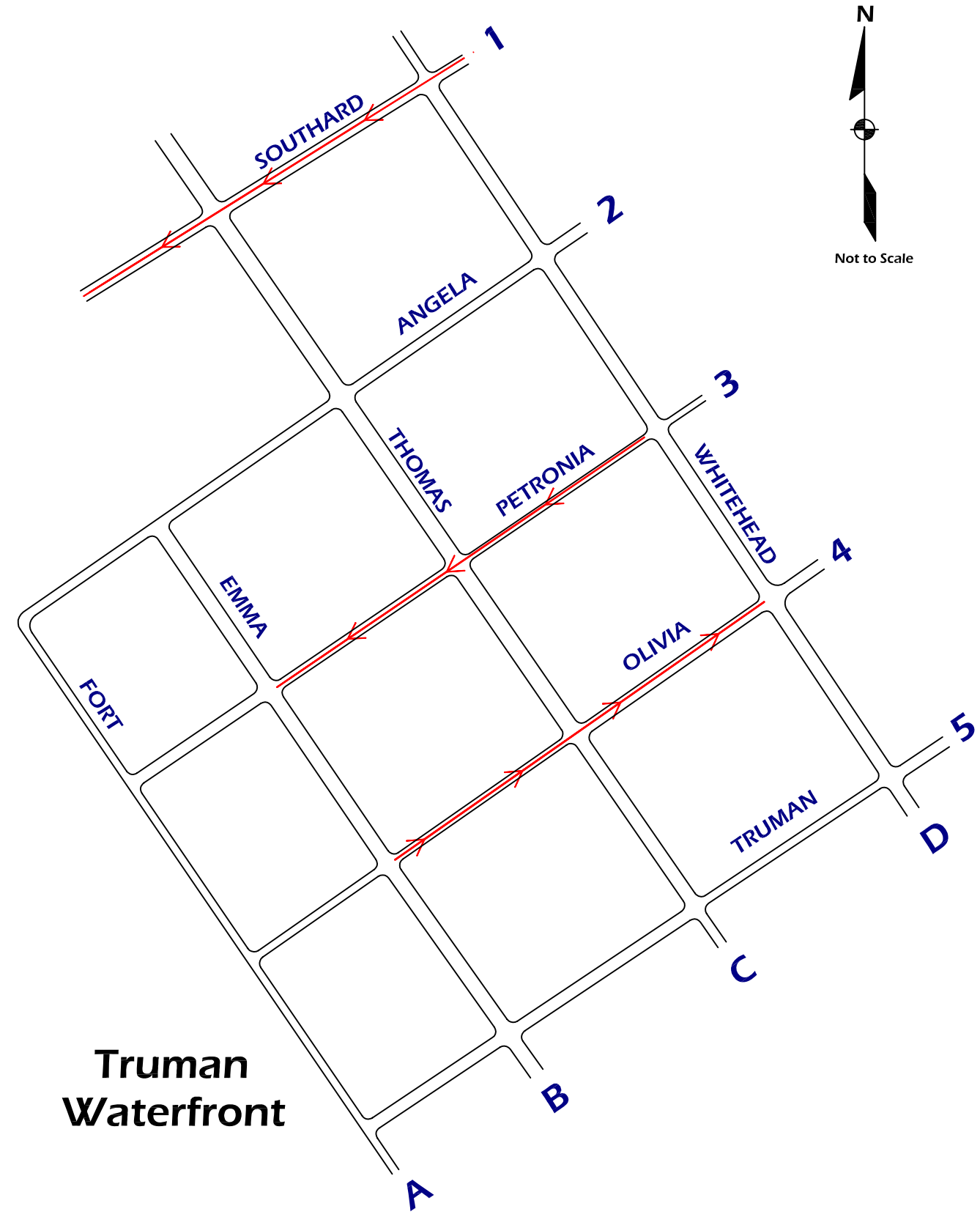

ATEC
Advanced Transportation Engineering Consultants.
12905 SW 42 St, Suite 209
Miami, Fl 33175
Phone: (305) 480-9938
Fax: (305) 480-9964

Figure 5: Study Photographs

Truman Waterfront
Evaluation of Project Traffic

Olivia St at Thomas St (4C)

Truman St at Tomas St (5C)

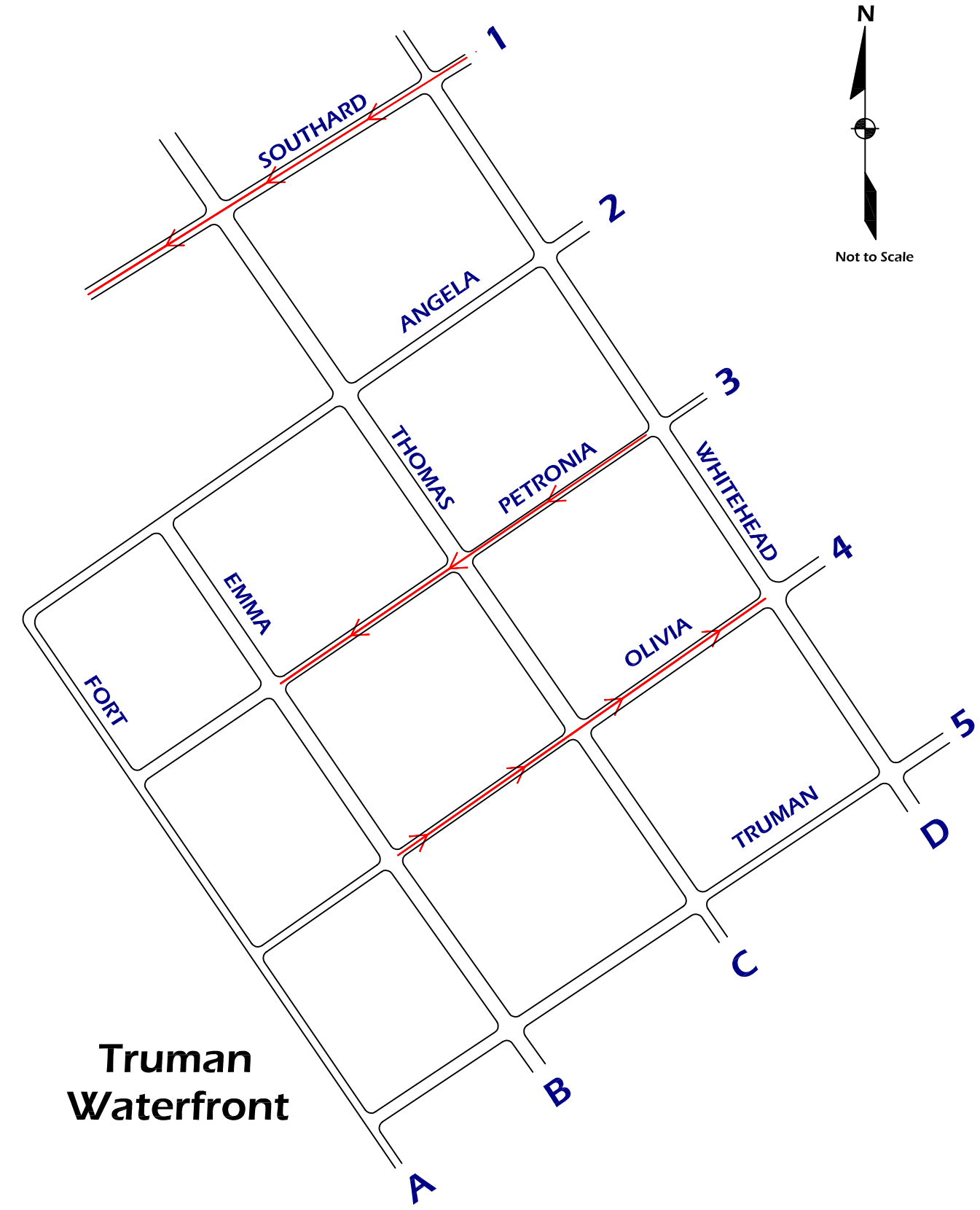

ATEC
Advanced Transportation Engineering Consultants.
12905 SW 42 St, Suite 209
Miami, Fl 33175
Phone: (305) 480-9938
Fax: (305) 480-9964

Figure 6: Study Photographs

Truman Waterfront
Evaluation of Project Traffic

Olivia St at Whitehead St (4D)

Truman St at Whitehead St (5D)

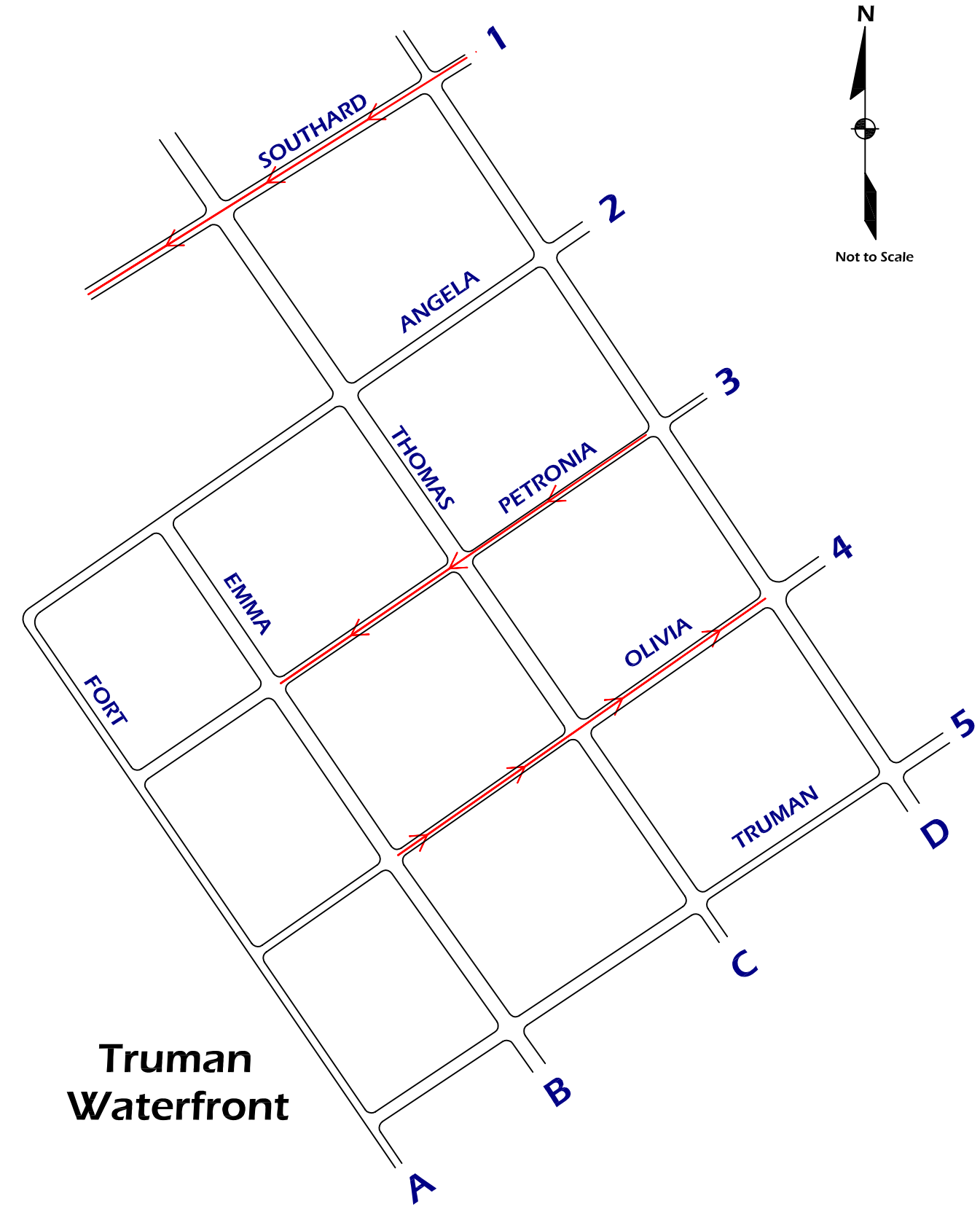

ATEC
Advanced Transportation Engineering Consultants.
12905 SW 42 St, Suite 209
Miami, Fl 33175
Phone: (305) 480-9938
Fax: (305) 480-9964

Figure 7: Study Photographs

Truman Waterfront
Evaluation of Project Traffic

Southard St and Thomas St (1C)

Angela St at Thomas St (2C)

Petronia St at Thomas St (3C)

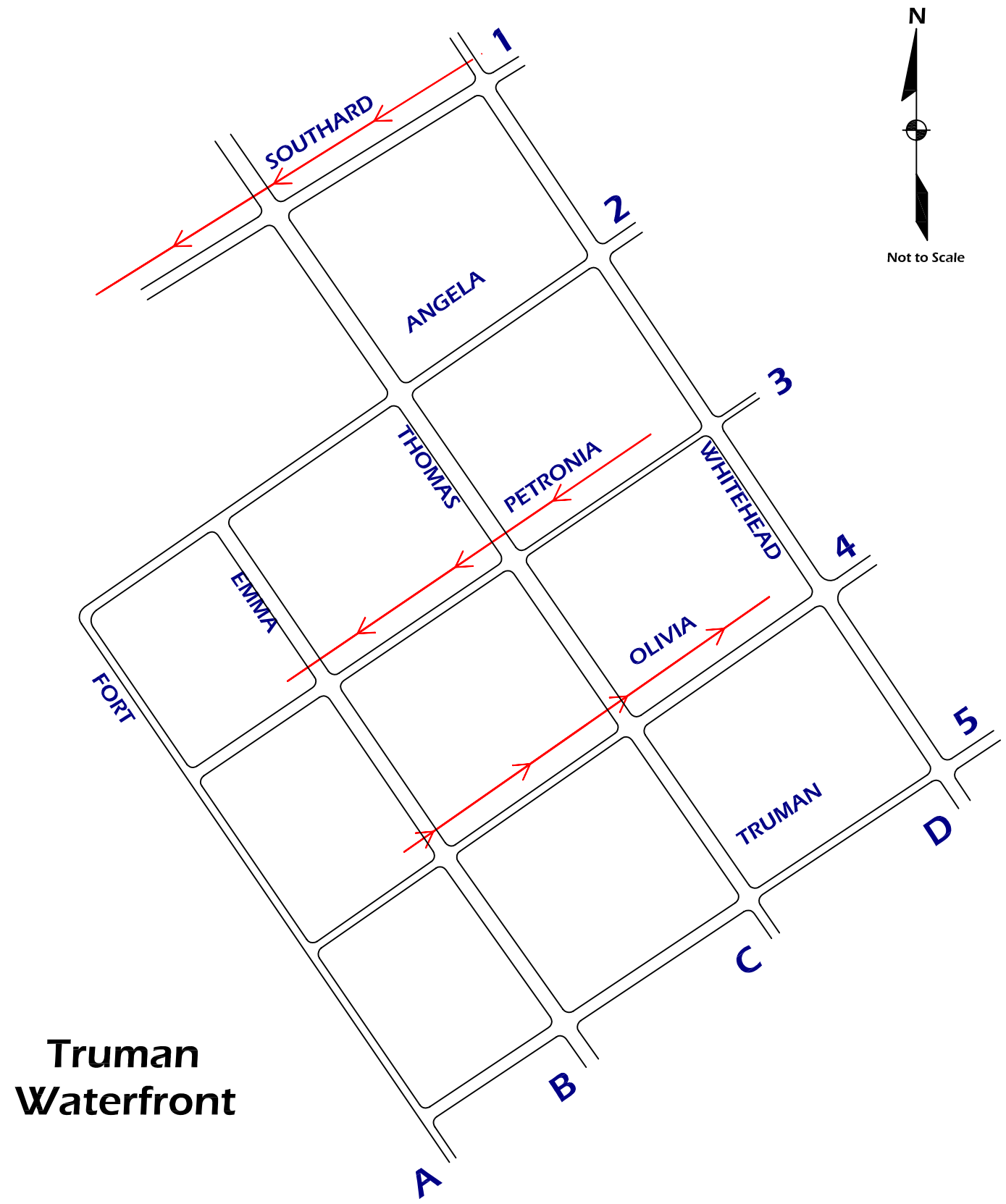

Truman Waterfront

ATEC Advanced Transportation Engineering Consultants.
12905 SW 42 St, Suite 209
Miami, Fl 33175
Phone: (305) 480-9938
Fax: (305) 480-9964

Figure 8: Study Photographs

Truman Waterfront
Evaluation of Project Traffic

Southard St at Whitehead St

Angela St at Whitehead St

Petronia St at Whitehead St

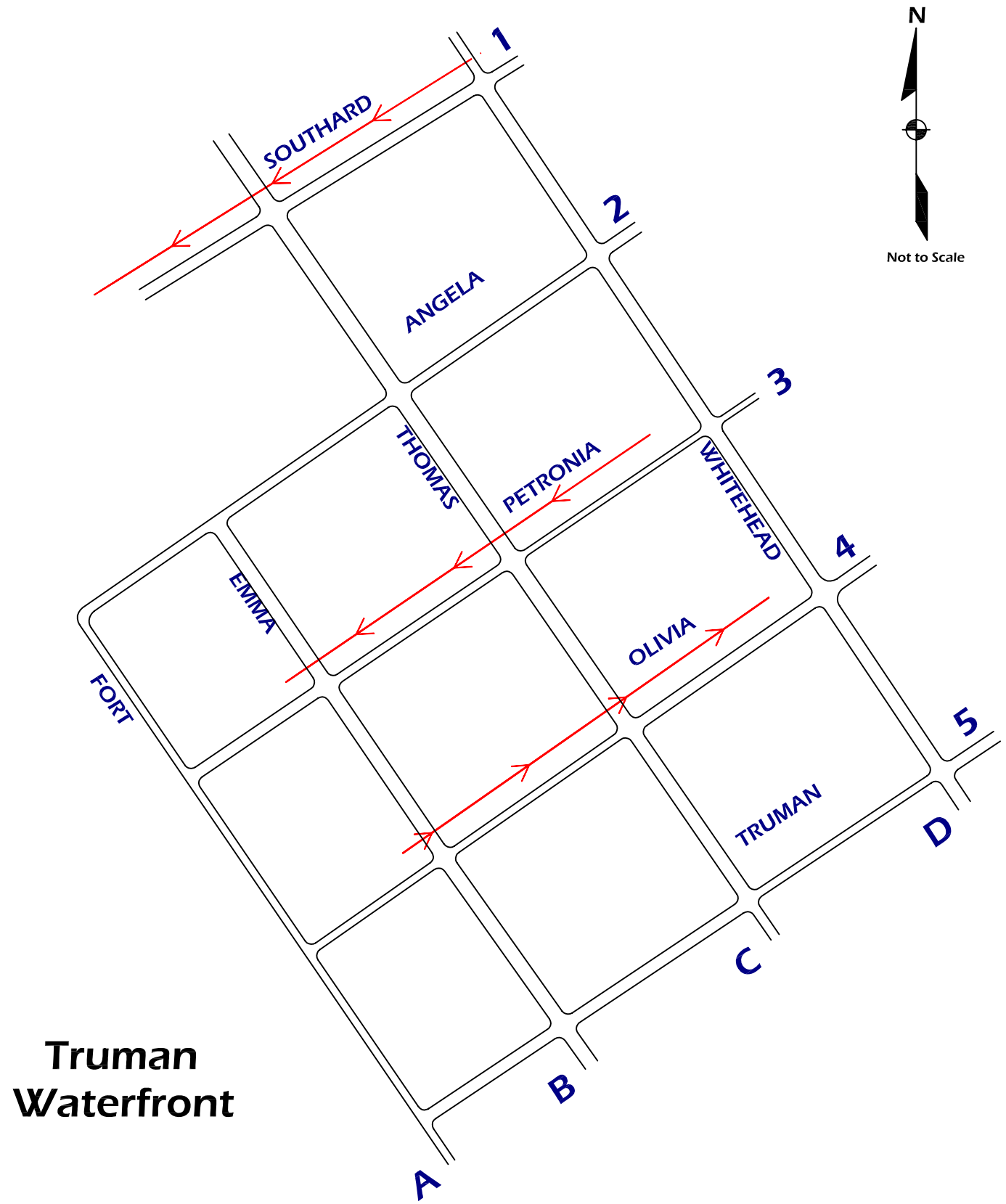

Truman Waterfront

ATEC Advanced Transportation Engineering Consultants.
12905 SW 42 St, Suite 209
Miami, Fl 33175
Phone: (305) 480-9938
Fax: (305) 480-9964

Figure 9: Study Photographs

3. Methodology

As part of this study a trip generation analysis based on the *Institute of Transportation Engineers (ITE), Trip Generation Report, 7th Edition* was performed to determine the daily trips, AM and PM Peak hour directional trips expected to be generated by the proposed development. The distribution of trips to the adjacent street network was performed taking into consideration the existing traffic volumes within the study area which reflect the current travel patterns in the area. That is, the number of trips assigned to each highway link was proportional to the current traffic volumes per direction. Furthermore, the traffic assignment considered the agreement between the City of Key West and the Truman Annex Homeowners Association (TAMPOA) which outlined the following conditions:

1. "The City shall provide ingress and egress by way of Fort Street through Olivia Street;
2. The City shall provide ingress through Petronia Street; and
3. The City shall provide ingress and egress by way of Truman Avenue to Fort Street."

In addition to trip generation and trip distribution/assignment, intersection level of service capacity analysis was performed at each of the intersections within the study area. This analysis was performed to assess the impacts of project traffic on the current intersection operations. The level of service analysis was performed based on the methodology outlined in the *2000 edition of Highway Capacity Manual.*

4. Analysis and Results

This section is comprised of four sub-sections. Sub-section 4.1 describes all of data collection activities. Section 4.2 describes the trip generation analysis followed by sub-section 4.3 which details the assignment of vehicles trips to the site and surrounding highway links. Sub-section 4.4 presents the Level of Service (LOS) analysis and impacts of the proposed development.

4.1. Data Collection

According to the Florida Department of Transportation's (FDOT) Transportation Statistics Office, the nearest count station is on Whitehead Street 100 feet south of Olivia Street. This segment of US 1 has an Average Annual Daily Traffic (AADT) of 8,300 vehicles per day. Also, the ratio of the traffic volume in the study hour to the annual average daily traffic (K factor), the directional distribution (D factor) and the truck factor (T) is 10.42%, 56.02% and 3.12%, respectively.

Turning Movement Counts were collected at 14 intersections within the study area during the AM peak period from 7:00 AM to 9:00 AM and during the 4:00 PM to 6:00 PM peak hour afternoon period. These counts were summarized and presented on Figure 10. The counts shown along Fort Street were estimated from the traffic entering and exiting Fort Street from Emma Street. Table 1 depicts all of the intersections within the study area and the type of intersection control. Seventy two (72) hours counts were conducted during the third week of December beginning on Tuesday December 20, 2005 through Thursday December 23, 2005. These data are needed to determine the non-pass by trip pattern in the vicinity of the study area as well as to

determine the distribution of local traffic. These volume counts are presented in Table 2. The raw counts are presented in Appendix A. It was assumed that for the purpose of this report Southard Street, Angela Street, Petronia Street, Oliva Street and Truman Avenue are running east and west; Whitehead Street, Thomas Street, Emma Street and Fort Street are running north and south.

Table 1 Intersection Control

Intersection			Intersection Control	
			Signal	Stop
Southard Street	at	Whitehead Street	X	
Southard Street	at	Thomas Street		X
Whitehead Street	at	Angela Street		X
Whitehead Street	at	Petronia Street		X
Whitehead Street	at	Olivia Street		X
Whitehead Street	at	Truman Avenue	X	
Truman Avenue	at	Thomas Street	X	
Truman Avenue	at	Emma Street		X
Olivia Street	at	Thomas Street		X
Olivia Street	at	Emma Street		X
Petronia Street	at	Emma Street		X
Petronia Street	at	Thomas Street	X	
Thomas Street	at	Angela Street		X
Angela Street	at	Emma Street		X

Table 2 Summary of 72-Hour Counts

Street	Between		EB	%	WB	%	NB	%	SB	%
Southard St	Whitehead St	Thomas St	1,777	4.1%	2,033	4.7%				
Whitehead St	Southard St	Angela St	-	-	-	-	2,817	6.5%	2,982	6.9%
Whitehead St	Angela St	Petronia St	-	-	-	-	2,860	6.6%	3,760	8.7%
Whitehead St	Petronia St	Olivia St	-	-	-	-	3,001	6.9%	3,039	7.0%
Whitehead St	Olivia St	Truman Ave.	-	-	-	-	2,948	6.8%	3,052	7.1%
Truman Ave.	Emma St	Thomas St	117	0.3%	96	0.2%	-	-	-	-
Emma St	Olivia St	Truman Ave.	-	-	-	-	671	1.6%	635	1.5%
Emma St	Petronia St	Olivia St	-	-	-	-	691	1.6%	1,167	2.7%
Thomas St	Southard St	Angela St	-	-	-	-	706	1.6%	910	2.1%
Thomas St	Angela St	Petronia St	-	-	-	-	1,080	2.5%	461	1.1%
Thomas St	Olivia St	Petronia St	-	-	-	-	607	1.4%	769	1.8%
Thomas St	Olivia St	Truman Ave	-	-	-	-	656	1.5%	692	1.6%
Angela St	Whitehead St	Thomas St	1,043	2.4%	560	1.3%	-	-	-	-
Angela St	Thomas St	Emma St	346	0.8%	577	1.3%	-	-	-	-
Olivia St	Emma St	Thomas St	676	1.6%	-	-	-	-	-	-
Olivia St	Thomas St	Whitehead St	504	1.2%	-	-	-	-	-	-
Petronia St	Emma St	Thomas St	-	-	901	2.1%	-	-	-	-
Petronia St	Thomas St	Whitehead St	-	-	1,140	2.6%	-	-	-	-
Emma St	Angela St	Petronia St	-	-	0	0.0%	577	1.3%	346	0.8%
Truman Ave.	Thomas St	Whitehead St	486	1.1%	324	0.7%	-	-	-	-

LEGEND

XX A.M. Peak Hour Volume
(XX) P.M. Peak Hour Volume
e Estimated
⇄ ADT

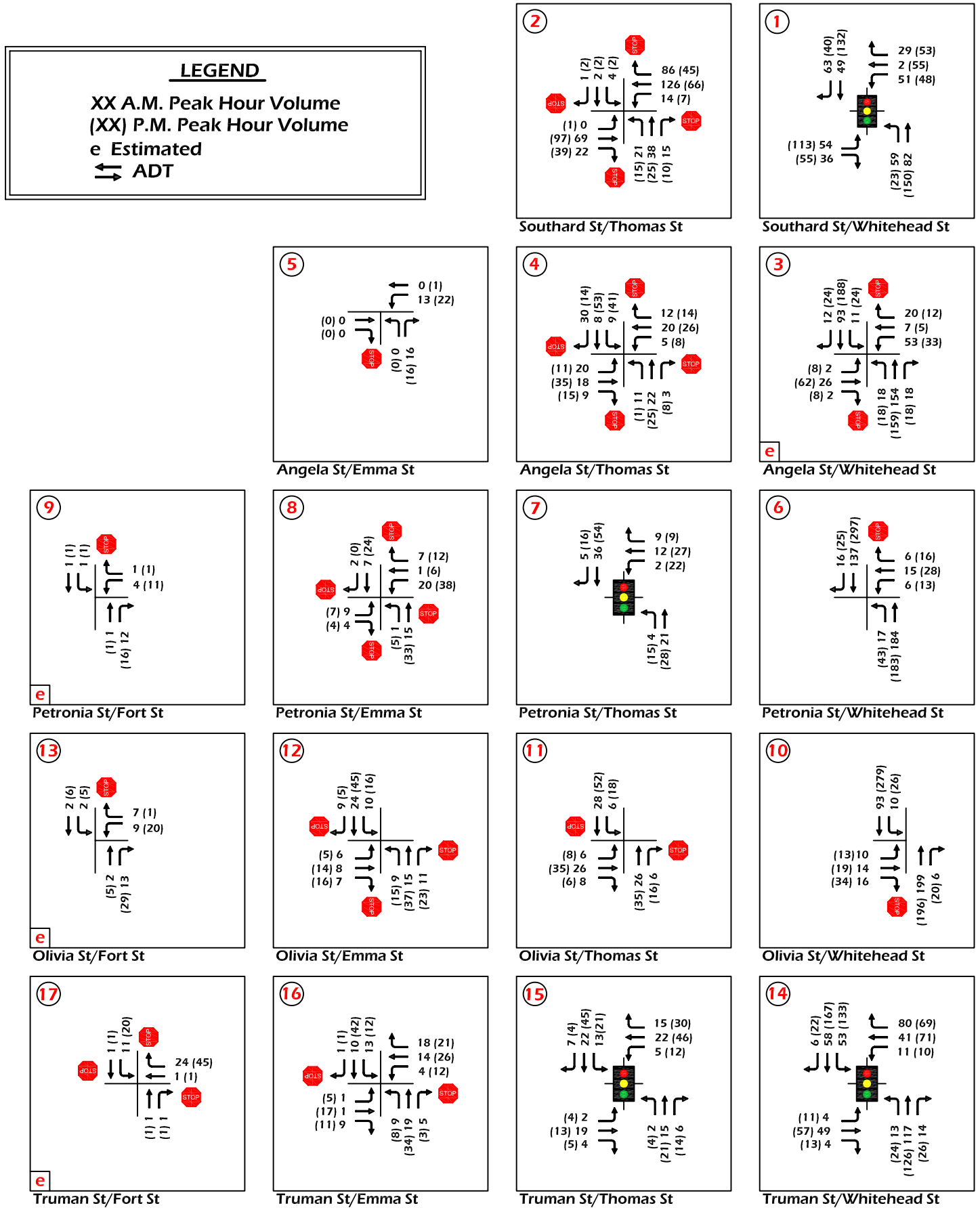

ATEC
Advanced Transportation Engineering Consultants.
12905 SW 42 St, Suite 209
Miami, Fl 33175
Phone: (305) 480-9938
Fax: (305) 480-9964

Figure 10: Existing Turning Movement Counts

Truman Waterfront Evaluation of Project Traffic

4.2. Trip Generation

The methodology outlined in the Institute of Transportation Engineers (ITE), Trip Generation 7th Edition was used to forecast traffic based on future land use. Daily trips and afternoon peak hour directional trips where estimated for the proposed land use.

Twenty-Six Acres of recreation and passive community centers is proposed for this site. Therefore, land use 415 (Beach Park Center) was used for this portion of the analysis. A regression equation, for estimating daily trips, was not available for this type of land use. However, an average rate is available and used for this type of land use.

$$T = 29.81(X) \tag{1}$$

The following average rate was used to estimate morning peak hour volume.

$$T = 0.48(X) \tag{2}$$

And,

The average rate for the afternoon peak hour is:

$$T = 1.30(X) \tag{3}$$

Where,

T = Number of Daily Trips, and
X = Acres

A total of 68,517 SF of commercial and professional was proposed for this project. Therefore, ITE land use 814 (Specialty Retail Center) was used for this analysis. The following regression equation, for estimating daily trips, was used for this type of land use.

$$T = 42.78(X) + 37.64 \qquad R^2 = 0.69 \tag{4}$$

The following regression equation was used to estimate morning peak hour volume.

$$T = 4.91(X) + 115.59 \qquad R^2 = 0.90 \tag{5}$$

The following rate was used to estimate afternoon peak hour volume.

$$T = 5.02(X) \tag{6}$$

Where,

T = Number of Daily Trips, and
X = 1000 Sq. Feet Gross Leasable Area (GLA).

ITE land use 210 (Single Family Detached) was used to estimate the trips generated by the proposed 36 affordable housing units (above commercial) within the site. The following regression equation, for estimating daily trips, was used for this type of land use.

$$Ln(T) = 0.92Ln(X) + 2.71 \qquad R^2 = 0.96 \qquad (7)$$

The following regression equation was used to estimate morning peak hour volume.

$$Ln(T) = 0.70Ln(X) + 12.05 \qquad R^2 = 0.91 \qquad (8)$$

The following regression equation was used to estimate afternoon peak hour volume.

$$Ln(T) = 0.89Ln(X) + 0.61 \qquad R^2 = 0.91 \qquad (9)$$

Where,

T = Number of Daily Trips, and
X = Number of Housing Units

There are fifty group homes of no more that six persons per home are proposed for this development. Therefore, ITE land use 254 (Assisted Living) was used for this analysis assuming a maximum of 50 beds. The following regression equation, for estimating daily trips, was used for this type of land use.

$$T = 1.61(X) + 132.16 \qquad (10)$$

The following rate was used to estimate future project traffic for the am peak period.

$$T = 0.18(X) \qquad (11)$$

The following regression equation was used to estimate afternoon peak hour volume.

$$T = 0.27(X) + 12.83 \qquad (12)$$

Where,

T = Number of Daily Trips, and
X = Number of Beds.

The proposed Marina will allow a maximum of 200 boat slips. ITE land use 420 (Marina) was used for this analysis assuming a maximum of 200 berths. The following regression equation, for estimating daily trips, was used for this type of land use.

$$T = 1.89(X) + 410.80 \quad (13)$$

The following average rate was used to estimate afternoon peak hour volume.

$$T = 0.17(X) \quad (14)$$

The following average rate was used to estimate afternoon peak hour volume.

$$T = 0.21(X) \quad (15)$$

Where,

T = Number of Daily Trips, and
X = Number of Berths.

Table 3 summarizes the results of the trip generation.

Since this is a multi-use development internal capture trips were estimated and discounted from the project trips. The proposed land uses are interrelated and some of the attracted trips will make trips between land uses without using the adjacent roadway network.

Pass-by trips were also accounted for in the calculation of project trip generation. Pass-by trips are trips already on the roadway system that would stop at the project site on an already planned trip.

In addition to vehicles, there are other modes of transportation available in the immediate area such as transit service and pedestrian facilities. It is expected that these modes of transportation will be used in conjunction with vehicles trips to the development.

To account for Internal Capture, Pass-By and Transit/Pedestrian facilities a 10 % reduction was used and discounted from the projected trips. Due the lack of established rates for these reductions a 10% reduction was assumed. Table 3 shows the reduction of these trips for the total daily trips and Table 4 shows the eduction for both peak periods.

Table 3 Results of Trip Generation

ITE Land Use	Unit	Size	AM Peak Hour	PM Peak Hour	Weekday (Trips)
Beach Park (415)	Acre	26.6	13	35	793
Specialty Retail (814)	1000	68.5	452	344	2,969
Assisted Living (254)	Beds	50	9	26	213
Single-Family Detached Housing (210)*	Units	36	37	45	406
Marina (420)	Berths	200	34	42	789
Sub-Total	-	-	545	492	5,169
Internal Capture (10%)	-	-	-55	-49	-517
Pass-by Trips (10%)	-	-	-55	-49	-517
Transit and Pedestrian (10%)	-	-	-55	-49	-517
Adjusted Total	-	-	382	344	3,619

* This ITE land use was used as a surrogate for 36 affordable housing units

4.3. Trip Distribution

The AM and PM peak hour project trip distributions are shown on Figure 11. The total, existing plus project traffic, are presented on Figure 12. Trips generated by the proposed project were assigned to the roadway system based on the percentages of entering and exiting as outlined in *The Institute of Transportation Engineers (ITE), Trip Generation Report, 7th Edition* for each land use as summarized in Table 4. The location of project entrance points and the location of available parking within the site were also taken into consideration in the assignment of project trips. The majority of the trips will enter through Petronia Street and exit through Olivia Street.

Table 4 Adjusted Peak Period Volumes

ITE Land Use	AM Peak Hour				PM Peak Hour			
	% Entering	Trips Entering	% Exiting	Trips Exiting	% Entering	Trips Entering	% Exiting	Trips Exiting
Beach Park (415)	59%	5	41%	4	29%	7	71%	17
Specialty Retail (814)	48%	152	52%	165	56%	135	44%	106
Assisted Living (254)	67%	4	33%	2	36%	7	64%	12
Single-Family Detached Housing (210)*	26%	7	74%	19	64%	20	36%	11
Marina (420)	64%	15	36%	9	51%	15	49%	14
Adjusted Total	-	183	-	198	-	183	-	161

* This ITE land use was used as a surrogate for 36 affordable housing units

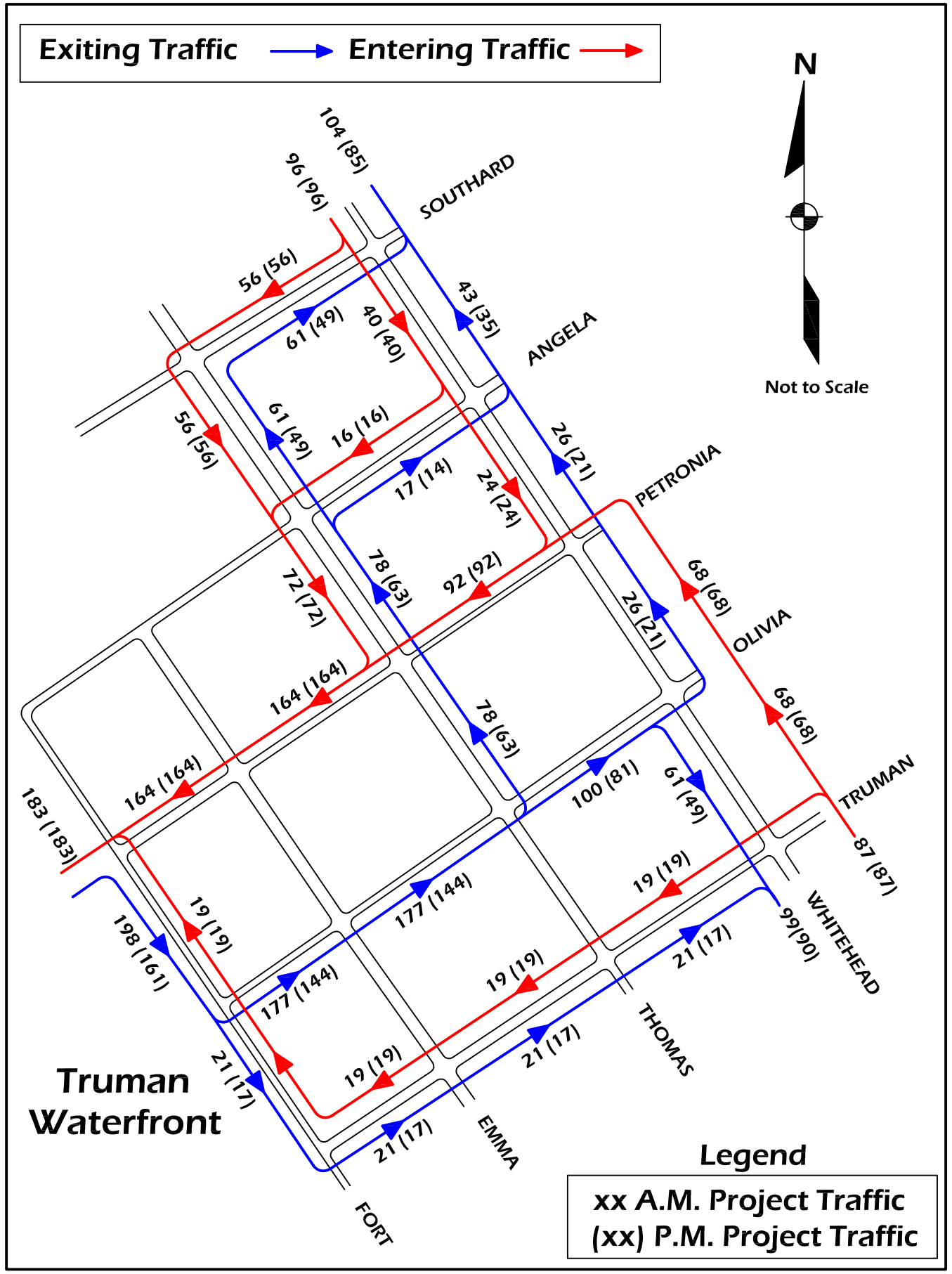

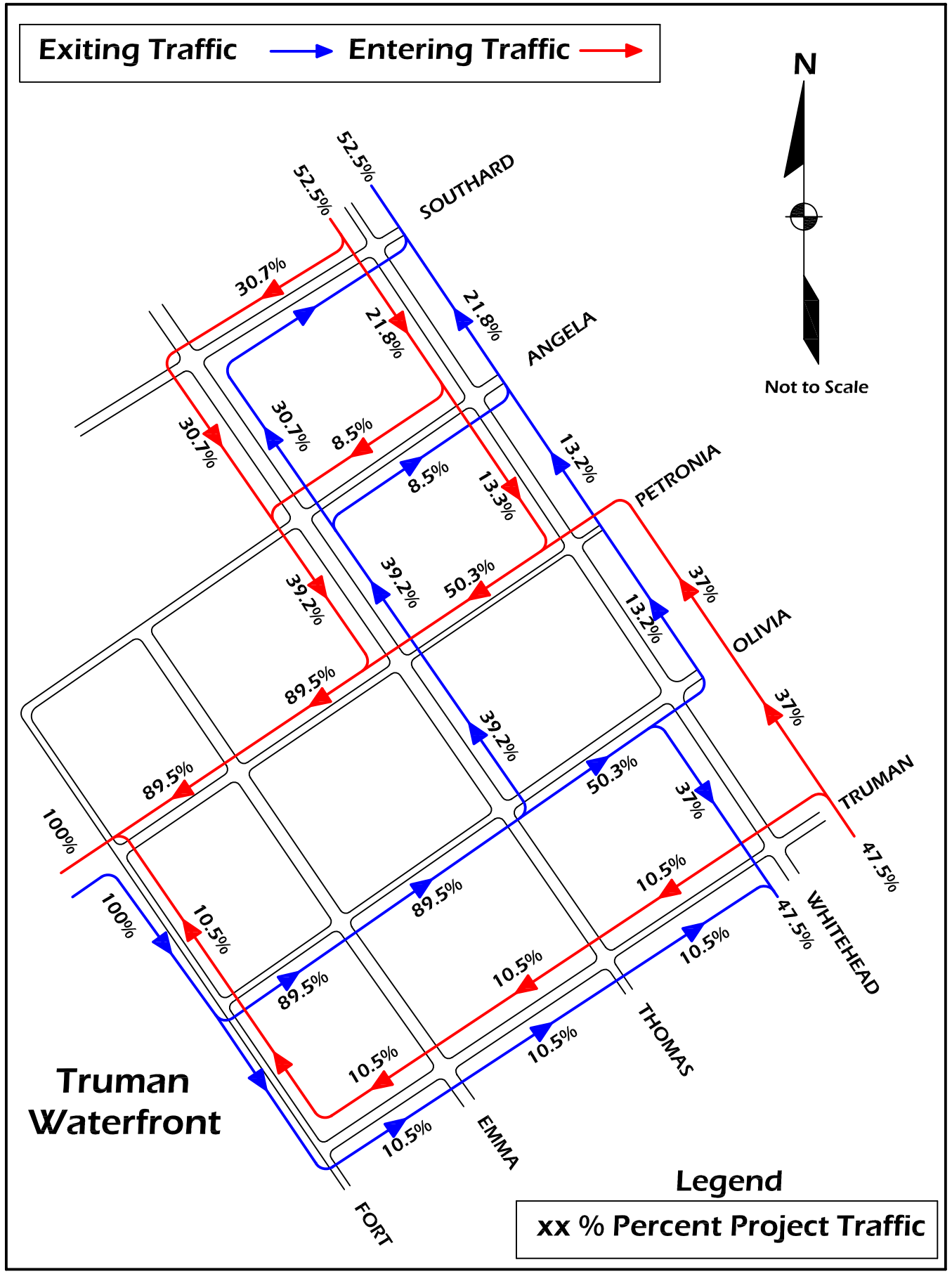

ATEC
Advanced Transportation Engineering Consultants, Inc.
12905 SW 42 St, Suite 209
Miami, Fl 33175
Phone: (305) 480-9938
Fax: (305) 480-9964

Figure 11: Project Trip Distribution

Truman Waterfront
Evaluation of Project Traffic

LEGEND

XX A.M. Peak Hour Volume
(XX) P.M. Peak Hour Volume
e Estimated
⇄ ADT

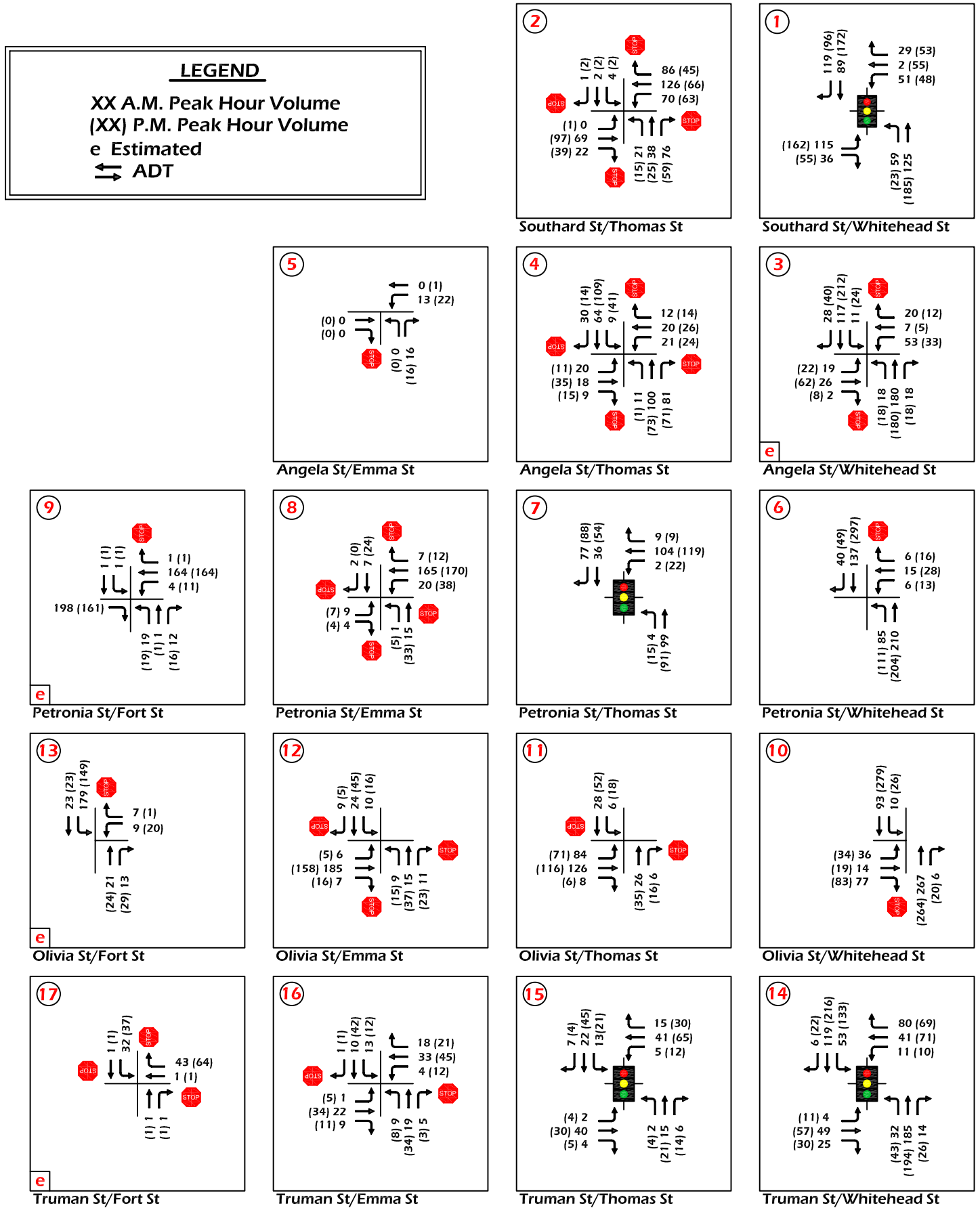

ATEC
Advanced Transportation Engineering Consultants.
12905 SW 42 St, Suite 209
Miami, Fl 33175
Phone: (305) 480-9938
Fax: (305) 480-9964

Figure 12: Future Turning Movement Counts

Truman Waterfront Evaluation of Project Traffic

4.4. Level of Service Analysis

Level of Service Analysis was performed for all of the intersections within the study area, un-signalized and signalized. Table 5 summarizes the Level of Service (LOS) criteria for un-signalized and signalized intersections.

Table 5 Intersection Level of Service Criteria (Based on HCM 2000, TRB, 2000)

LOS	Un-Signalized Intersection (Ave. Control Delay s/veh)	Signalized Intersection (Ave. Control Delay s/veh)
A	0–10	0-10
B	>10-15	>10 – 20
C	>15-25	>20 – 35
D	>25-35	>35 – 55
E	>35-50	>55 – 80
F	>50	> 80

Traffic operations at un-signalized intersections using the Highway Capacity Manual 2000 methodology for un-signalized intersections were utilized. With this methodology, operations are defined by the average control delay per vehicle for each stop-controlled movement. This incorporates delay associated with deceleration, acceleration, stopping, and moving up in the queue. For side-street stop-controlled intersections, the delay is typically represented for each movement from the minor approaches only. Table 6 and 7 shows the level of service results for the stopped approach under the existing and future prevailing traffic conditions, respectively. For the purpose of this report Southard Street, Angela Street, Petronia Street, Oliva Street and Truman Avenue are running east and west. Also, Whitehead Street, Thomas Street, Emma Street and Fort Street are running north and south.

Table 6 Summary of LOS for Stopped Approach at Un-Signalized Intersection (Existing)

Un-Signalized Intersection			Stopped Approach LOS							
			EB		WB		NB		SB	
			AM	PM	AM	PM	AM	PM	AM	PM
Southard Street	at	Thomas Street	A	A	A	A	A	A	A	A
Whitehead	at	Angela Street	B	C	B	C	-	-	-	-
Whitehead Street	at	Petronia Street	-	-	B	C	-	-	-	-
Whitehead Street	at	Olivia Street	B	B	-	-	-	-	-	-
Truman Avenue	at	Emma Street	-	-	-	-	B	B	B	B
Olivia Street	at	Thomas Street	-	-	-	-	B	B	B	B
Olivia Street	at	Emma Street	A	A	-	-	A	A	A	A
Petronia Street	at	Emma Street	A	A	A	A	A	A	A	A
Thomas Street	at	Angela Street	A	A	A	A	A	A	A	A
Angela Street	at	Emma Street	-	-	-	-	A	A	-	-
Truman Avenue	at	Fort Street	-	-	A	A	A	A	A	A
Olivia Street	at	Fort Street	-	-	A	A	-	-	-	-
Petronia Street	at	Fort Street	-	-	A	A	-	-	-	-

Table 7 Summary of LOS for Stopped Approach at Un-Signalized Intersection (Future)

Un-Signalized Intersection			Stopped Approach LOS							
			EB		WB		NB		SB	
			AM	PM	AM	PM	AM	PM	AM	PM
Southard Street	at	Thomas Street	A	A	A	A	A	A	A	A
Whitehead	at	Angela Street	C	C	C	C	-	-	-	-
Whitehead Street	at	Petronia Street	-	-	C	C	-	-	-	-
Whitehead Street	at	Olivia Street	B	C	-	-	-	-	-	-
Truman Avenue	at	Emma Street	-	-	-	-	B	B	B	B
Olivia Street	at	Thomas Street	-	-	-	-	B	B	C	C
Olivia Street	at	Emma Street	A	A	-	-	A	A	A	A
Petronia Street	at	Emma Street	A	A	A	A	A	A	A	A
Thomas Street	at	Angela Street	A	A	A	A	A	A	A	A
Angela Street	at	Emma Street	-	-	-	-	A	A	-	-
Truman Avenue	at	Fort Street	-	-	A	A	A	A	A	A
Olivia Street	at	Fort Street	-	-	B	B	-	-	-	-
Petronia Street	at	Fort Street	B	B	B	B	-	-	-	-

At signalized intersections, traffic conditions were evaluated using the Highway Capacity Manual 2000 methodology. This operation analysis uses various intersection characteristics (i.e., traffic volumes, lane geometry, and signal phasing) to estimate the average control delay experienced by motorists traveling through an intersection. Table 8 through 11 shows the results of the level of service for the existing and future traffic levels, respectively.

Table 8 Summary of LOS for Signalized Intersection (AM Existing)

Signalized Intersection			Int	Approach LOS				Approach Delay (s/veh)			
			LOS	EB	WB	NB	SB	EB	WB	NB	SB
Southard Street	at	Whitehead St.	B	B	B	B	A	15.3	15.6	10.9	9.5
Whitehead Street	at	Truman Avenue	B	A	B	B	B	9.2	10	11.5	10.9
Truman Avenue	at	Thomas Street	A	A	A	A	A	7.5	7.7	7.4	7.9
Petronia Street	at	Thomas Street	A	-	A	A	A	-	8.5	8.7	9

Table 9 Summary of LOS for Signalized Intersection (PM Existing)

Signalized Intersection			Int	Approach LOS				Approach Delay (s/veh)			
			LOS	EB	WB	NB	SB	EB	WB	NB	SB
Southard Street	at	Whitehead St.	B	B	B	B	B	18.6	17.9	11.0	10.7
Whitehead Street	at	Truman Avenue	B	A	B	B	C	9.6	10.5	13.0	26.2
Truman Avenue	at	Thomas Street	A	A	A	A	A	7.3	8.3	7.6	8.4
Petronia Street	at	Thomas Street	A	-	A	A	A	-	9.1	9.1	9.4

Table 10 Summary of LOS for Signalized Intersection (AM Future)

Signalized Intersection			Int	Approach LOS				Approach Delay (s/veh)			
			LOS	EB	WB	NB	SB	EB	WB	NB	SB
Southard Street	at	Whitehead St.	B	B	B	B	A	18.1	15.6	12.0	11.0
Whitehead Street	at	Truman Avenue	B	A	B	B	B	9.2	10.0	15.4	12.5
Truman Avenue	at	Thomas Street	A	A	A	A	A	7.5	8.1	7.4	7.9
Petronia Street	at	Thomas Street	B	-	B	B	B	-	10.5	10.6	10.1

Table 11 Summary of LOS for Signalized Intersection (PM Future)

Signalized Intersection			Int	Approach LOS				Approach Delay (s/veh)			
			LOS	EB	WB	NB	SB	EB	WB	NB	SB
Southard Street	at	Whitehead St.	B	C	B	B	B	22.2	17.9	11.8	12.9
Whitehead Street	at	Truman Avenue	C	A	B	C	D	9.8	10.5	19.6	41.3
Truman Avenue	at	Thomas Street	A	A	A	A	A	7.3	8.8	7.6	8.5
Petronia Street	at	Thomas Street	B	-	B	B	B	-	10.9	10.3	10.3

5. Conclusions and Recommendations

The total trips generated by the proposed development are 3,619 new vehicles trips per day, 382 vehicles and 344 vehicles during the morning and afternoon peak hour, respectively. These trips will be attracted by the proposed development. Below is a summary of the findings and recommendations.

1. Currently all of the un-signalized intersections are operating at level of service C or better for the stopped approach during the morning and afternoon peak periods under existing traffic conditions. However, most are operating at level of service A. All of the signalized intersections are operating at level of service C or better during both peak periods.

2. The analysis did not reveal a discernable difference between the existing and proposed traffic levels for the un-signalized intersections of Southard Street at Thomas Street, Olivia Street at Emma Street, Petronia Street at Emma Street, Thomas Street at Angela Street and Truman Avenue at Fort Street. In terms of overall intersection level of service

there is virtually no difference between the existing and future traffic conditions. However, some of the approaches experience minor degradation of approach delay or a slight increase in delay. Please note that the intersection level of service is based on the evaluation of each intersection individually and does not take into account the overall effect within the entire study area. Therefore, we recommend using a microsimulation traffic analysis tool which will allow for a network analysis rather than isolated intersections. This analysis will allow the evaluation of queues at each of the intersections within the study area. This is a key aspect that should be further evaluated due to the potential impacts of significant queuing on residential streets.

3. The geometry on Truman Avenue Between Emma Street and Thomas Street is constrained since there is approximately 18 feet of pavement for two-way traffic. In addition, on street parking is provided on the west side of the street. Even though two-way traffic is allowed on this portion of Truman Avenue, our field observations revealed that it currently operates as a one-way street since vehicular two-way traffic can not be accommodated within the current lane widths. Therefore, we recommend converting Truman Avenue between Emma Street and Thomas Street into a one-way street in the westbound direction toward Front Street.

4. Petronia Street should be converted from two-way traffic to one-way operation in the westbound direction between Fort Street and Emma Street. This improves the efficiency of the ingress operation of the development.

5. Consideration should be given to changing the intersection control from all-way stop to two-way stop control for the intersection of Angela Street at Thomas Street stopping east-west traffic on Angela Street. Also, the all-way stop control at the intersections of Petronia Street at Emma Street and Olivia Street at Emma Street should also be considered for two-way stop control stopping north-south traffic on Emma Street. Additional study to evaluate the appropriate traffic control device for these intersections is recommended.

6. The four signalized intersections within the study area should be retimed to accommodate the additional project traffic. The intersections are Southard Street at Whitehead Street, Petronia Street at Thomas Street, Truman Avenue at Thomas Street and Truman Avenue at Whitehead Street.

7. Consideration should be given to a more in-depth assessment of existing transit service and pedestrian facilities. This assessment will identify the need for improvements in transit service and pedestrian facilities which may result in a reduction of vehicular traffic.

8. As a general note, all of the streets within the study area are narrow and appear to have sub-standard roadway design features. These streets should be evaluated and improved from a geometric standpoint wherever possible. Therefore, we recommend an exhaustive evaluation of the existing geometric conditions. One key aspect that should be further

investigating is the necessary turning radii to accommodate additional transit vehicles within the study area.

APPENDIX A
TURNING MOVEMENT COUNTS

ATEC
Advanced Transportation
Engineering Consultants

INTERSECTION:	*--/Angela St--*	**START TIME:**	*7:00 AM*
PROJECT ID#:		**END TIME:**	*9:00 AM*
QC JOB #:	*10134214*	**DATE:**	*12/20/2005*

QUALITY COUNTS
16285 SW 85th Avenue, Ste. 105
Tigard, OR 97224
Phone: 503-620-4242
Fax: 503 620-4545
email: jrw@qualitycounts.net
www.qualitycounts.net

PEAK HOUR TURNING MOVEMENTS

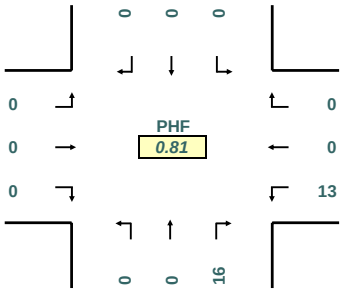

PEAK HOUR LINK VOLUMES

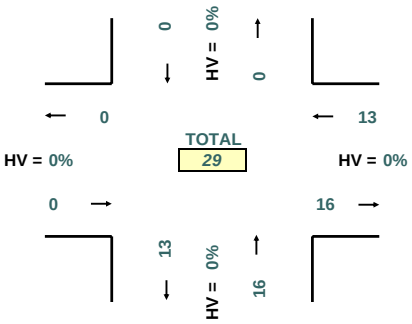

PEAK HOUR PED CROSSING VOLUMES

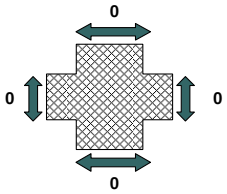

PEAK HOUR: 8:00 AM TO 9:00 AM

PEAK 15 MINUTES: 7:30 AM TO 7:45 AM

5-MINUTE COUNT PERIOD BEGINNING AT	-- (Southbound)			*Angela St--* (Westbound)			*Emma St--* (Northbound)			*Angela St--* (Eastbound)			Crosswalk Usage (Peds By Approach)				TOTAL	
	Right	Thru	Left	Right	Thru	Left	Right	Thru	Left	Right	Thru	Left	North	East	South	West	Veh	Peds
7:00 AM	0	0	0	0	0	1	3	0	0	0	0	0	0	0	0	0	4	0
7:05 AM	0	0	0	0	0	1	1	0	0	0	0	0	0	0	0	0	2	0
7:10 AM	0	0	0	0	0	0	1	0	0	0	0	0	0	0	0	0	1	0
7:15 AM	0	0	0	0	0	0	1	0	0	0	0	0	0	0	0	0	1	0
7:20 AM	0	0	0	0	0	0	1	0	0	0	0	0	0	0	0	0	1	0
7:25 AM	0	0	0	0	0	1	1	0	0	0	0	0	0	0	0	0	2	0
7:30 AM	0	0	0	0	0	1	0	0	0	0	0	0	0	0	0	0	1	0
7:35 AM	0	0	0	0	0	0	2	0	0	0	1	0	0	0	0	0	3	0
7:40 AM	0	0	0	0	0	0	6	0	0	0	0	0	0	0	0	0	6	0
7:45 AM	0	0	0	0	0	0	3	0	0	0	0	0	0	0	0	0	3	0
7:50 AM	0	0	0	0	0	0	0	0	0	0	0	0	0	0	0	0	0	0
7:55 AM	0	0	0	0	0	0	1	0	0	0	0	0	0	0	0	0	1	0
8:00 AM	0	0	0	0	0	0	0	0	0	0	0	0	0	0	0	0	0	0
8:05 AM	0	0	0	0	0	2	2	0	0	0	0	0	0	0	0	0	4	0
8:10 AM	0	0	0	0	0	0	3	0	0	0	0	0	0	0	0	0	3	0
8:15 AM	0	0	0	0	0	0	1	0	0	0	0	0	0	0	0	0	1	0
8:20 AM	0	0	0	0	0	3	0	0	0	0	0	0	0	0	0	0	3	0
8:25 AM	0	0	0	0	0	0	1	0	0	0	0	0	0	0	0	0	1	0
8:30 AM	0	0	0	0	0	1	0	0	0	0	0	0	0	0	0	0	1	0
8:35 AM	0	0	0	0	0	3	2	0	0	0	0	0	0	0	0	0	5	0
8:40 AM	0	0	0	0	0	0	3	0	0	0	0	0	0	0	0	0	3	0
8:45 AM	0	0	0	0	0	0	2	0	0	0	0	0	0	0	0	0	2	0
8:50 AM	0	0	0	0	0	2	1	0	0	0	0	0	0	0	0	0	3	0
8:55 AM	0	0	0	0	0	2	1	0	0	0	0	0	0	0	0	0	3	0

HOURLY TOTALS	Southbound			Westbound			Northbound			Eastbound			Pedestrians By Approach				TOTAL	
	Right	Thru	Left	Right	Thru	Left	Right	Thru	Left	Right	Thru	Left	West	East	North	South	Veh	Peds
7:00 AM	0	0	0	0	0	4	20	0	0	0	1	0	0	0	0	0	25	0
7:15 AM	0	0	0	0	0	4	20	0	0	0	1	0	0	0	0	0	25	0
7:30 AM	0	0	0	0	0	6	19	0	0	0	1	0	0	0	0	0	26	0
7:45 AM	0	0	0	0	0	9	16	0	0	0	0	0	0	0	0	0	25	0
8:00 AM	0	0	0	0	0	13	16	0	0	0	0	0	0	0	0	0	29	0

Version 3.1

INTERSECTION:	*Emma/Angela St--*	**START TIME:**	*4:00 PM*
PROJECT ID#:		**END TIME:**	*6:00 PM*
QC JOB #:	*10134228*	**DATE:**	*12/20/2005*

QUALITY COUNTS
16285 SW 85th Avenue, Ste. 105
Tigard, OR 97224
Phone: 503-620-4242
Fax: 503 620-4545
email: jrw@qualitycounts.net
www.qualitycounts.net

PEAK HOUR TURNING MOVEMENTS

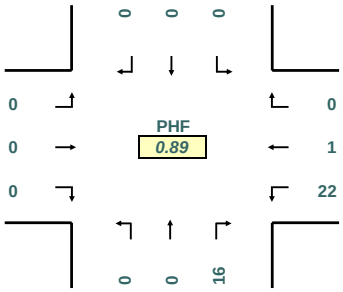

PEAK HOUR LINK VOLUMES

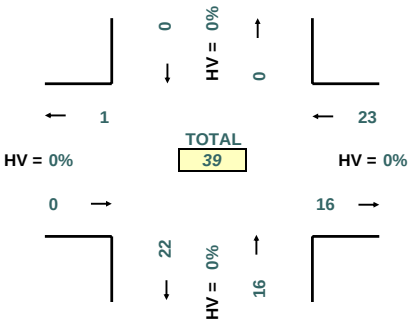

PEAK HOUR PED CROSSING VOLUMES

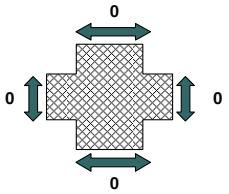

PEAK HOUR: 4:15 PM TO 5:15 PM

PEAK 15 MINUTES: 5:00 PM TO 5:15 PM

5-MINUTE COUNT PERIOD BEGINNING AT	-- (Southbound)			*Angela St--* (Westbound)			*Emma St--* (Northbound)			*Angela St--* (Eastbound)			Crosswalk Usage (Peds By Approach)				TOTAL	
	Right	Thru	Left	Right	Thru	Left	Right	Thru	Left	Right	Thru	Left	North	East	South	West	Veh	Peds
4:00 PM	0	0	0	0	1	1	1	0	0	0	0	0	0	0	0	0	3	0
4:05 PM	0	0	0	0	0	2	1	0	0	0	0	0	0	0	0	0	3	0
4:10 PM	0	0	0	0	0	1	1	0	0	0	0	0	0	0	0	0	2	0
4:15 PM	0	0	0	0	0	0	1	0	0	0	0	0	0	0	0	0	1	0
4:20 PM	0	0	0	0	0	4	4	0	0	0	0	0	0	0	0	0	8	0
4:25 PM	0	0	0	0	0	1	1	0	0	0	0	0	0	0	0	0	2	0
4:30 PM	0	0	0	0	1	0	1	0	0	0	0	0	0	0	0	0	2	0
4:35 PM	0	0	0	0	0	0	0	0	0	0	0	0	0	0	0	0	0	0
4:40 PM	0	0	0	0	0	4	0	0	0	0	0	0	0	0	0	0	4	0
4:45 PM	0	0	0	0	0	5	1	0	0	0	0	0	0	0	0	0	6	0
4:50 PM	0	0	0	0	0	0	3	0	0	0	0	0	0	0	0	0	3	0
4:55 PM	0	0	0	0	0	1	1	0	0	0	0	0	0	0	0	0	2	0
5:00 PM	0	0	0	0	0	4	2	0	0	0	0	0	0	0	0	0	6	0
5:05 PM	0	0	0	0	0	2	2	0	0	0	0	0	0	0	0	0	4	0
5:10 PM	0	0	0	0	0	1	0	0	0	0	0	0	0	0	0	0	1	0
5:15 PM	0	0	0	0	0	1	1	0	0	0	0	0	0	0	0	0	2	0
5:20 PM	0	0	0	0	0	0	5	0	0	0	0	0	0	0	0	0	5	0
5:25 PM	0	0	0	0	0	2	0	0	0	0	0	0	0	0	0	0	2	0
5:30 PM	0	0	0	0	0	2	0	0	0	0	0	0	0	0	0	0	2	0
5:35 PM	0	0	0	0	0	1	0	0	0	0	0	0	0	0	0	0	1	0
5:40 PM	0	0	0	0	0	1	1	0	0	0	0	0	0	0	0	0	2	0
5:45 PM	0	0	0	0	0	0	0	0	0	0	0	0	0	0	0	0	0	0
5:50 PM	0	0	0	0	0	0	0	0	0	0	0	0	0	0	0	0	0	0
5:55 PM	0	0	0	0	0	1	4	0	0	0	0	0	0	0	0	0	5	0

HOURLY TOTALS	Southbound			Westbound			Northbound			Eastbound			Pedestrians By Approach				TOTAL	
	Right	Thru	Left	Right	Thru	Left	Right	Thru	Left	Right	Thru	Left	West	East	North	South	Veh	Peds
4:00 PM	0	0	0	0	2	19	15	0	0	0	0	0	0	0	0	0	36	0
4:15 PM	0	0	0	0	1	22	16	0	0	0	0	0	0	0	0	0	39	0
4:30 PM	0	0	0	0	1	20	16	0	0	0	0	0	0	0	0	0	37	0
4:45 PM	0	0	0	0	0	20	16	0	0	0	0	0	0	0	0	0	36	0
5:00 PM	0	0	0	0	0	15	15	0	0	0	0	0	0	0	0	0	30	0

Version 3.1

INTERSECTION:	*Emma St--/Olivia St--*	**START TIME:**	*7:00 AM*
PROJECT ID#:		**END TIME:**	*9:00 AM*
QC JOB #:	*10134210*	**DATE:**	*12/20/2005*

QUALITY COUNTS
16285 SW 85th Avenue, Ste. 105
Tigard, OR 97224
Phone: 503-620-4242
Fax: 503 620-4545
email: jrw@qualitycounts.net
www.qualitycounts.net

PEAK HOUR TURNING MOVEMENTS

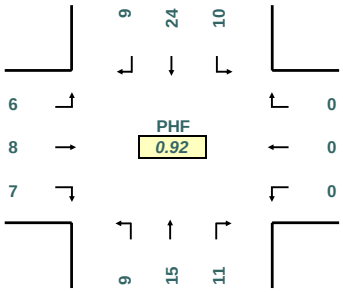

PEAK HOUR LINK VOLUMES

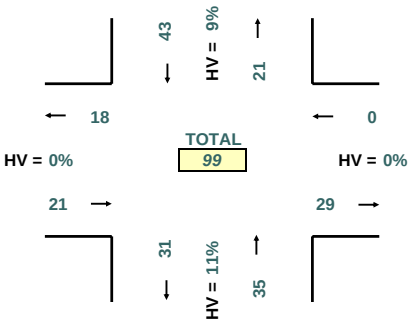

PEAK HOUR PED CROSSING VOLUMES

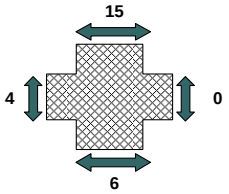

PEAK HOUR: 8:00 AM TO 9:00 AM

PEAK 15 MINUTES: 8:15 AM TO 8:30 AM

5-MINUTE COUNT PERIOD BEGINNING AT	*Emma St--* (Southbound)			*Olivia St--* (Westbound)			*Emma St--* (Northbound)			*Olivia St--* (Eastbound)			Crosswalk Usage (Peds By Approach)				TOTAL	
	Right	Thru	Left	Right	Thru	Left	Right	Thru	Left	Right	Thru	Left	North	East	South	West	Veh	Peds
7:00 AM	0	1	0	0	0	0	0	1	0	0	0	0	1	0	0	0	2	1
7:05 AM	0	1	0	0	0	0	0	1	0	0	0	0	0	0	0	0	2	0
7:10 AM	0	1	0	0	0	0	0	1	0	0	0	0	0	0	0	0	2	0
7:15 AM	0	2	0	0	0	0	2	0	0	0	0	0	2	0	0	0	4	2
7:20 AM	0	1	0	0	0	0	0	2	0	0	1	0	0	0	3	0	4	3
7:25 AM	0	2	0	0	0	0	3	0	0	0	1	0	1	0	0	0	6	1
7:30 AM	0	2	1	0	0	0	1	3	2	1	0	0	0	0	0	0	10	0
7:35 AM	0	2	0	0	0	0	0	0	0	0	1	0	0	0	0	0	3	0
7:40 AM	0	3	1	0	0	0	0	2	1	0	0	1	0	0	0	0	8	0
7:45 AM	0	0	1	0	0	0	0	1	0	1	0	0	2	0	0	1	3	3
7:50 AM	1	1	2	0	0	0	0	1	0	0	1	0	0	0	0	0	6	0
7:55 AM	0	1	2	0	0	0	1	2	2	0	0	0	1	0	0	0	8	1
8:00 AM	1	2	0	0	0	0	2	0	1	0	0	0	4	0	0	0	6	4
8:05 AM	3	1	1	0	0	0	2	3	0	0	0	0	1	0	0	0	10	1
8:10 AM	0	1	1	0	0	0	1	2	1	2	1	1	0	0	3	1	10	4
8:15 AM	1	2	1	0	0	0	0	3	0	0	0	0	2	0	0	0	7	2
8:20 AM	0	5	1	0	0	0	2	1	2	1	0	1	0	0	1	1	13	2
8:25 AM	0	2	2	0	0	0	0	0	0	2	1	0	1	0	0	1	7	2
8:30 AM	1	2	1	0	0	0	2	1	1	1	1	0	3	0	0	0	10	3
8:35 AM	1	4	0	0	0	0	1	0	1	0	1	0	0	0	0	0	8	0
8:40 AM	0	0	0	0	0	0	0	2	1	0	2	2	1	0	0	0	7	1
8:45 AM	0	1	1	0	0	0	0	0	2	0	1	2	0	0	2	0	7	2
8:50 AM	2	4	2	0	0	0	1	1	0	1	0	0	3	0	0	0	11	3
8:55 AM	0	0	0	0	0	0	0	2	0	0	1	0	0	0	0	1	3	1

HOURLY TOTALS	Southbound			Westbound			Northbound			Eastbound			Pedestrians By Approach				TOTAL	
	Right	Thru	Left	Right	Thru	Left	Right	Thru	Left	Right	Thru	Left	West	East	North	South	Veh	Peds
7:00 AM	1	17	7	0	0	0	7	14	5	2	4	1	7	0	3	1	58	11
7:15 AM	5	18	9	0	0	0	12	16	7	4	5	2	11	0	6	2	78	19
7:30 AM	6	22	13	0	0	0	9	18	9	7	4	3	11	0	4	4	91	19
7:45 AM	8	21	12	0	0	0	11	16	9	7	7	4	15	0	4	4	95	23
8:00 AM	9	24	10	0	0	0	11	15	9	7	8	6	15	0	6	4	99	25

Version 3.1

INTERSECTION:	*Emma--/Olivia--*	**START TIME:**	*4:00 PM*
PROJECT ID#:		**END TIME:**	*6:00 PM*
QC JOB #:	*10134224*	**DATE:**	*12/20/2005*

QUALITY COUNTS
16285 SW 85th Avenue, Ste. 105
Tigard, OR 97224
Phone: 503-620-4242
Fax: 503 620-4545
email: jrw@qualitycounts.net
www.qualitycounts.net

PEAK HOUR TURNING MOVEMENTS

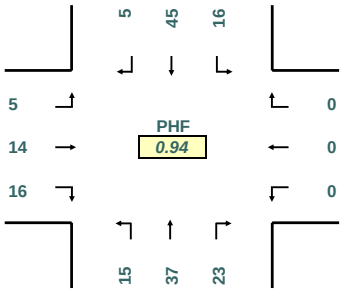

PEAK HOUR LINK VOLUMES

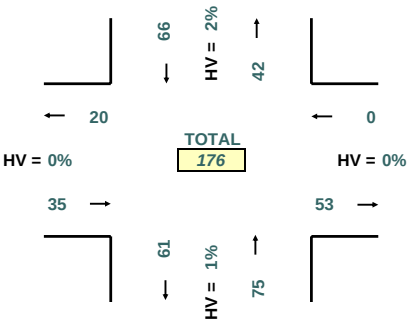

PEAK HOUR PED CROSSING VOLUMES

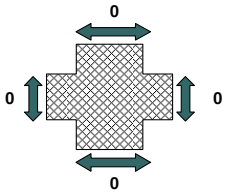

PEAK HOUR: 4:30 PM TO 5:30 PM

PEAK 15 MINUTES: 5:00 PM TO 5:15 PM

5-MINUTE COUNT PERIOD BEGINNING AT	*Emma--* (Southbound)			*Olivia--* (Westbound)			*Emma--* (Northbound)			*Olivia--* (Eastbound)			Crosswalk Usage (Peds By Approach)				TOTAL	
	Right	Thru	Left	Right	Thru	Left	Right	Thru	Left	Right	Thru	Left	North	East	South	West	Veh	Peds
4:00 PM	0	7	1	0	0	0	1	4	0	0	4	0	0	0	0	0	17	0
4:05 PM	1	2	1	0	0	0	0	1	2	1	1	0	0	0	0	0	9	0
4:10 PM	1	3	0	0	0	0	0	6	0	1	0	0	0	0	0	0	11	0
4:15 PM	0	3	0	0	0	0	1	3	0	0	2	1	0	0	0	0	10	0
4:20 PM	0	1	1	0	0	0	1	4	1	1	0	0	0	0	0	0	9	0
4:25 PM	1	3	5	0	0	0	3	1	1	0	1	1	0	0	0	0	16	0
4:30 PM	0	2	2	0	0	0	2	1	0	4	1	1	0	0	0	0	13	0
4:35 PM	1	3	0	0	0	0	2	5	3	1	1	0	0	0	0	0	16	0
4:40 PM	0	4	1	0	0	0	1	3	2	1	1	0	0	0	0	0	13	0
4:45 PM	0	2	1	0	0	0	2	3	0	0	1	1	0	0	0	0	10	0
4:50 PM	2	6	2	0	0	0	1	4	1	1	0	0	0	0	0	0	17	0
4:55 PM	0	4	1	0	0	0	3	0	2	1	3	1	0	0	0	0	15	0
5:00 PM	0	2	2	0	0	0	2	2	2	5	1	0	0	0	0	0	16	0
5:05 PM	1	6	3	0	0	0	1	5	0	0	2	1	0	0	0	0	19	0
5:10 PM	0	7	0	0	0	0	1	2	1	0	1	0	0	0	0	0	12	0
5:15 PM	1	1	1	0	0	0	2	3	1	3	1	1	0	0	0	0	14	0
5:20 PM	0	4	1	0	0	0	5	5	0	0	1	0	0	0	0	0	16	0
5:25 PM	0	4	2	0	0	0	1	4	3	0	1	0	0	0	0	0	15	0
5:30 PM	0	5	0	0	0	0	0	0	1	0	0	1	0	0	0	0	7	0
5:35 PM	2	6	1	0	0	0	3	5	0	0	2	0	0	0	0	0	19	0
5:40 PM	1	1	4	0	0	0	2	0	0	0	2	0	0	0	0	0	10	0
5:45 PM	1	1	0	0	0	0	2	3	1	1	0	0	0	0	0	0	9	0
5:50 PM	0	5	2	0	0	0	2	0	0	0	0	0	0	0	0	0	9	0
5:55 PM	0	6	1	0	0	0	0	0	1	0	0	0	0	0	0	0	8	0

HOURLY TOTALS	Southbound			Westbound			Northbound			Eastbound			Pedestrians By Approach				TOTAL	
	Right	Thru	Left	Right	Thru	Left	Right	Thru	Left	Right	Thru	Left	West	East	North	South	Veh	Peds
4:00 PM	6	40	15	0	0	0	17	35	12	11	15	5	0	0	0	0	156	0
4:15 PM	5	43	18	0	0	0	20	33	13	14	14	6	0	0	0	0	166	0
4:30 PM	5	45	16	0	0	0	23	37	15	16	14	5	0	0	0	0	176	0
4:45 PM	7	48	18	0	0	0	23	33	11	10	15	5	0	0	0	0	170	0
5:00 PM	6	48	17	0	0	0	21	29	10	9	11	3	0	0	0	0	154	0

Version 3.1

INTERSECTION:	*Thomas St--/Olivia St--*	**START TIME:**	*7:00 AM*
PROJECT ID#:		**END TIME:**	*9:00 AM*
QC JOB #:	*10134209*	**DATE:**	*12/20/2005*

QUALITY COUNTS
16285 SW 85th Avenue, Ste. 105
Tigard, OR 97224
Phone: 503-620-4242
Fax: 503 620-4545
email: jrw@qualitycounts.net
www.qualitycounts.net

PEAK HOUR TURNING MOVEMENTS

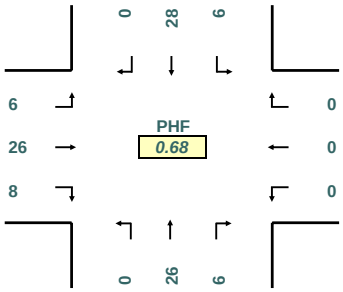

PEAK HOUR LINK VOLUMES

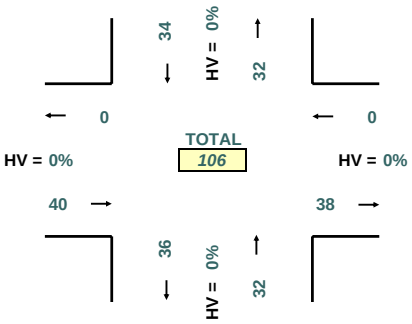

PEAK HOUR PED CROSSING VOLUMES

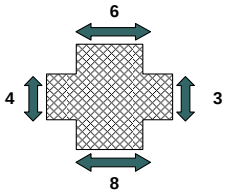

PEAK HOUR: 8:00 AM TO 9:00 AM

PEAK 15 MINUTES: 8:45 AM TO 9:00 AM

5-MINUTE COUNT PERIOD BEGINNING AT	*Thomas St--* (Southbound)			*Olivia St--* (Westbound)			*Thomas St--* (Northbound)			*Olivia St--* (Eastbound)			Crosswalk Usage (Peds By Approach)				TOTAL	
	Right	Thru	Left	Right	Thru	Left	Right	Thru	Left	Right	Thru	Left	North	East	South	West	Veh	Peds
7:00 AM	0	1	1	0	0	0	1	3	0	0	0	0	0	0	1	0	6	1
7:05 AM	0	2	0	0	0	0	0	1	0	0	1	0	2	0	1	1	4	4
7:10 AM	0	0	0	0	0	0	0	1	0	0	1	1	1	0	1	2	3	4
7:15 AM	0	0	0	0	0	0	0	1	0	0	1	0	1	0	0	2	2	3
7:20 AM	0	2	0	0	0	0	0	1	0	0	3	1	0	0	1	1	7	2
7:25 AM	0	3	0	0	0	0	0	2	0	0	3	0	0	1	1	0	8	2
7:30 AM	0	2	1	0	0	0	0	0	0	0	3	0	1	0	2	1	6	4
7:35 AM	0	1	1	0	0	0	0	2	0	0	0	0	1	0	2	0	4	3
7:40 AM	0	1	0	0	0	0	0	3	0	1	2	0	2	0	3	2	7	7
7:45 AM	0	0	1	0	0	0	0	3	0	2	3	1	1	0	1	1	10	3
7:50 AM	0	0	0	0	0	0	0	2	0	0	1	1	3	1	1	0	4	5
7:55 AM	0	0	1	0	0	0	1	4	0	0	3	1	0	0	1	1	10	2
8:00 AM	0	4	0	0	0	0	0	4	0	0	1	1	0	0	1	0	10	1
8:05 AM	0	0	0	0	0	0	1	0	0	2	2	1	1	2	1	1	6	5
8:10 AM	0	0	0	0	0	0	1	4	0	0	2	0	0	0	0	0	7	0
8:15 AM	0	3	0	0	0	0	0	1	0	2	2	0	0	1	0	0	8	1
8:20 AM	0	2	0	0	0	0	0	3	0	1	4	1	0	0	1	1	11	2
8:25 AM	0	2	1	0	0	0	0	2	0	0	3	1	0	0	1	0	9	1
8:30 AM	0	0	0	0	0	0	0	1	0	0	1	0	2	0	1	0	2	3
8:35 AM	0	1	0	0	0	0	0	2	0	0	2	0	1	0	1	0	5	2
8:40 AM	0	6	1	0	0	0	0	0	0	0	1	1	1	0	1	1	9	3
8:45 AM	0	2	3	0	0	0	1	1	0	0	4	0	1	0	0	0	11	1
8:50 AM	0	8	0	0	0	0	2	3	0	0	2	0	0	0	0	1	15	1
8:55 AM	0	0	1	0	0	0	1	5	0	3	2	1	0	0	1	0	13	1

HOURLY TOTALS	Southbound			Westbound			Northbound			Eastbound			Pedestrians By Approach				TOTAL	
	Right	Thru	Left	Right	Thru	Left	Right	Thru	Left	Right	Thru	Left	West	East	North	South	Veh	Peds
7:00 AM	0	12	5	0	0	0	2	23	0	3	21	5	12	2	15	11	71	40
7:15 AM	0	13	4	0	0	0	3	26	0	5	24	6	10	4	14	9	81	37
7:30 AM	0	15	5	0	0	0	3	28	0	8	26	7	9	4	14	7	92	34
7:45 AM	0	18	4	0	0	0	3	26	0	7	25	8	9	4	10	5	91	28
8:00 AM	0	28	6	0	0	0	6	26	0	8	26	6	6	3	8	4	106	21

Version 3.1

INTERSECTION:	*Thomas St--/Olivia St--*	**START TIME:**	*4:00 PM*
PROJECT ID#:		**END TIME:**	*6:00 PM*
QC JOB #:	*10134223*	**DATE:**	*12/20/2005*

QUALITY COUNTS
16285 SW 85th Avenue, Ste. 105
Tigard, OR 97224
Phone: 503-620-4242
Fax: 503 620-4545
email: jrw@qualitycounts.net
www.qualitycounts.net

PEAK HOUR TURNING MOVEMENTS

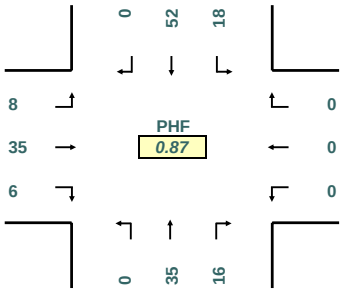

PEAK HOUR LINK VOLUMES

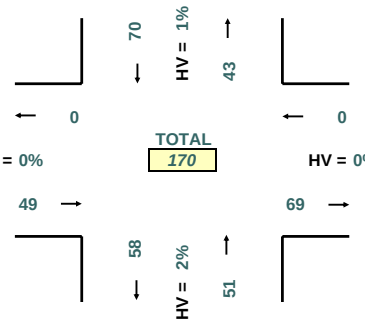

PEAK HOUR PED CROSSING VOLUMES

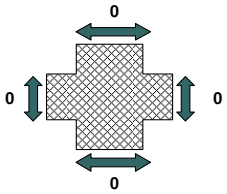

PEAK HOUR: 4:00 PM TO 5:00 PM

PEAK 15 MINUTES: 4:00 PM TO 4:15 PM

5-MINUTE COUNT PERIOD BEGINNING AT	*Thomas St--* (Southbound)			*Olivia St--* (Westbound)			*Thomas St--* (Northbound)			*Olivia St--* (Eastbound)			Crosswalk Usage (Peds By Approach)				TOTAL	
	Right	Thru	Left	Right	Thru	Left	Right	Thru	Left	Right	Thru	Left	North	East	South	West	Veh	Peds
4:00 PM	0	6	1	0	0	0	0	4	0	0	5	1	0	0	0	0	17	0
4:05 PM	0	5	2	0	0	0	0	8	0	0	5	0	0	0	0	0	20	0
4:10 PM	0	3	0	0	0	0	1	3	0	1	1	3	0	0	0	0	12	0
4:15 PM	0	6	3	0	0	0	2	4	0	0	2	0	0	0	0	0	17	0
4:20 PM	0	3	3	0	0	0	1	5	0	0	3	2	0	0	0	0	17	0
4:25 PM	0	1	2	0	0	0	2	2	0	1	1	0	0	0	0	0	9	0
4:30 PM	0	4	2	0	0	0	2	1	0	2	5	0	0	0	0	0	16	0
4:35 PM	0	2	1	0	0	0	2	2	0	0	3	1	0	0	0	0	11	0
4:40 PM	0	5	0	0	0	0	2	1	0	0	2	0	0	0	0	0	10	0
4:45 PM	0	4	1	0	0	0	1	0	0	0	5	0	0	0	0	0	11	0
4:50 PM	0	4	2	0	0	0	1	3	0	2	2	0	0	0	0	0	14	0
4:55 PM	0	9	1	0	0	0	2	2	0	0	1	1	0	0	0	0	16	0
5:00 PM	0	6	2	0	0	0	1	6	0	0	2	0	0	0	0	0	17	0
5:05 PM	0	6	2	0	0	0	1	6	0	1	3	1	0	0	0	0	20	0
5:10 PM	0	3	1	0	0	0	0	4	0	0	1	0	0	0	0	0	9	0
5:15 PM	0	3	0	0	0	0	1	7	0	2	3	1	0	0	0	0	17	0
5:20 PM	0	5	1	0	0	0	1	4	0	0	1	0	0	0	0	0	12	0
5:25 PM	0	3	1	0	0	0	2	0	0	1	5	0	0	0	0	0	12	0
5:30 PM	0	4	1	0	0	0	0	4	0	1	3	2	0	0	0	0	15	0
5:35 PM	0	7	1	0	0	0	2	3	0	0	3	0	0	0	0	0	16	0
5:40 PM	0	3	1	0	0	0	0	3	0	2	2	0	0	0	0	0	11	0
5:45 PM	0	5	0	0	0	0	0	3	0	0	5	0	0	0	0	0	13	0
5:50 PM	0	2	2	0	0	0	0	3	0	0	4	0	0	0	0	0	11	0
5:55 PM	0	2	2	0	0	0	0	4	0	0	2	1	0	0	0	0	11	0

HOURLY TOTALS	Southbound			Westbound			Northbound			Eastbound			Pedestrians By Approach				TOTAL	
	Right	Thru	Left	Right	Thru	Left	Right	Thru	Left	Right	Thru	Left	West	East	North	South	Veh	Peds
4:00 PM	0	52	18	0	0	0	16	35	0	6	35	8	0	0	0	0	170	0
4:15 PM	0	53	20	0	0	0	17	36	0	6	30	5	0	0	0	0	167	0
4:30 PM	0	54	14	0	0	0	16	36	0	8	33	4	0	0	0	0	165	0
4:45 PM	0	57	14	0	0	0	12	42	0	9	31	5	0	0	0	0	170	0
5:00 PM	0	49	14	0	0	0	8	47	0	7	34	5	0	0	0	0	164	0

Version 3.1

INTERSECTION:	*Emma St--/Petronia St--*	**START TIME:**	*7:00 AM*
PROJECT ID#:		**END TIME:**	*9:00 AM*
QC JOB #:	*10134211*	**DATE:**	*12/20/2005*

QUALITY COUNTS
16285 SW 85th Avenue, Ste. 105
Tigard, OR 97224
Phone: 503-620-4242
Fax: 503 620-4545
email: jrw@qualitycounts.net
www.qualitycounts.net

PEAK HOUR TURNING MOVEMENTS

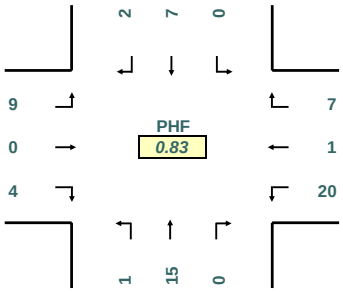

PEAK HOUR LINK VOLUMES

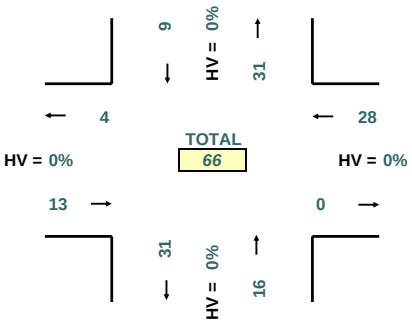

PEAK HOUR PED CROSSING VOLUMES

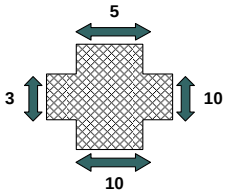

PEAK HOUR: 7:30 AM TO 8:30 AM

PEAK 15 MINUTES: 7:30 AM TO 7:45 AM

5-MINUTE COUNT PERIOD BEGINNING AT	*Emma St--* (Southbound)			*Petronia St--* (Westbound)			*Emma St--* (Northbound)			*Petronia St--* (Eastbound)			Crosswalk Usage (Peds By Approach)				TOTAL	
	Right	Thru	Left	Right	Thru	Left	Right	Thru	Left	Right	Thru	Left	North	East	South	West	Veh	Peds
7:00 AM	0	0	0	1	0	4	0	1	0	0	0	1	0	0	1	0	7	1
7:05 AM	0	1	0	0	0	0	0	0	0	0	0	0	1	1	0	0	1	2
7:10 AM	0	0	0	0	0	0	0	1	1	0	0	0	0	0	0	0	2	0
7:15 AM	0	0	0	0	0	1	0	0	0	0	0	2	1	1	0	1	3	3
7:20 AM	0	0	0	1	0	1	0	0	1	0	0	0	1	0	1	1	3	3
7:25 AM	0	0	0	0	0	0	0	1	0	2	0	0	0	0	0	0	3	0
7:30 AM	0	1	0	0	0	1	0	1	0	0	0	0	2	0	0	0	3	2
7:35 AM	0	1	0	0	0	1	0	2	0	0	0	2	1	1	0	0	6	2
7:40 AM	0	1	0	2	0	1	0	5	0	1	0	1	0	0	1	0	11	1
7:45 AM	1	0	0	1	1	1	0	2	0	0	0	1	0	1	2	0	7	3
7:50 AM	0	1	0	1	0	2	0	0	0	1	0	0	0	1	0	1	5	2
7:55 AM	0	0	0	0	0	2	0	1	0	0	0	1	1	0	1	1	4	3
8:00 AM	0	0	0	1	0	2	0	0	0	0	0	1	0	3	0	0	4	3
8:05 AM	0	1	0	1	0	3	0	2	0	0	0	1	0	1	1	0	8	2
8:10 AM	0	0	0	1	0	1	0	0	0	0	0	1	0	0	1	0	3	1
8:15 AM	0	0	0	0	0	1	0	1	0	0	0	0	0	1	2	0	2	3
8:20 AM	1	1	0	0	0	2	0	1	0	2	0	0	1	1	1	1	7	4
8:25 AM	0	1	0	0	0	3	0	0	1	0	0	1	0	1	1	0	6	2
8:30 AM	0	1	0	0	0	5	0	0	0	0	0	1	1	1	0	1	7	3
8:35 AM	0	2	0	0	0	1	0	0	0	0	0	1	1	1	1	0	4	3
8:40 AM	0	0	0	0	0	0	0	3	0	0	0	0	1	2	0	0	3	3
8:45 AM	0	0	0	1	0	1	0	3	0	0	0	0	0	0	1	0	5	1
8:50 AM	1	3	0	1	1	3	0	1	0	0	0	0	1	0	4	0	10	5
8:55 AM	0	1	0	0	0	0	0	1	1	0	0	0	0	1	2	0	3	3

HOURLY TOTALS	Southbound			Westbound			Northbound			Eastbound			Pedestrians By Approach				TOTAL	
	Right	Thru	Left	Right	Thru	Left	Right	Thru	Left	Right	Thru	Left	West	East	North	South	Veh	Peds
7:00 AM	1	5	0	6	1	14	0	14	2	4	0	8	7	5	6	4	55	22
7:15 AM	1	5	0	8	1	16	0	14	1	4	0	10	6	8	7	4	60	25
7:30 AM	2	7	0	7	1	20	0	15	1	4	0	9	5	10	10	3	66	28
7:45 AM	2	7	0	5	1	23	0	10	1	3	0	8	5	13	10	4	60	32
8:00 AM	2	10	0	5	1	22	0	12	2	2	0	6	5	12	14	2	62	33

Version 3.1

INTERSECTION:	*Emma St--/Petronia St--*	**START TIME:**	*4:00 PM*
PROJECT ID#:		**END TIME:**	*6:00 PM*
QC JOB #:	*10134225*	**DATE:**	*12/20/2005*

QUALITY COUNTS
16285 SW 85th Avenue, Ste. 105
Tigard, OR 97224
Phone: 503-620-4242
Fax: 503 620-4545
email: jrw@qualitycounts.net
www.qualitycounts.net

PEAK HOUR TURNING MOVEMENTS

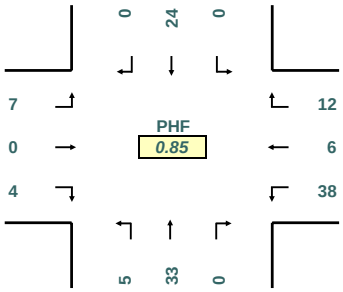

PEAK HOUR LINK VOLUMES

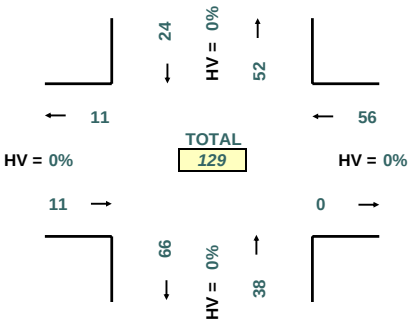

PEAK HOUR PED CROSSING VOLUMES

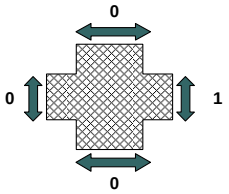

PEAK HOUR: 4:30 PM TO 5:30 PM

PEAK 15 MINUTES: 4:30 PM TO 4:45 PM

5-MINUTE COUNT PERIOD BEGINNING AT	*Emma St--* (Southbound)			*Petronia St--* (Westbound)			*Emma St--* (Northbound)			*Petronia St--* (Eastbound)			Crosswalk Usage (Peds By Approach)				TOTAL	
	Right	Thru	Left	Right	Thru	Left	Right	Thru	Left	Right	Thru	Left	North	East	South	West	Veh	Peds
4:00 PM	0	5	0	0	2	1	0	3	0	0	0	0	0	0	0	0	11	0
4:05 PM	0	0	0	1	3	5	0	4	0	2	0	0	0	1	0	1	15	2
4:10 PM	0	0	0	0	0	3	0	2	0	0	0	0	0	0	1	0	5	1
4:15 PM	0	1	0	1	0	0	0	1	0	0	0	1	1	1	1	0	4	3
4:20 PM	0	0	0	1	0	3	0	1	1	0	0	2	1	1	0	0	8	2
4:25 PM	0	0	0	2	0	1	0	3	0	2	0	1	0	3	0	3	9	6
4:30 PM	0	3	0	1	1	3	0	3	1	0	0	0	0	0	0	0	12	0
4:35 PM	0	0	0	2	0	6	0	4	2	1	0	0	0	0	0	0	15	0
4:40 PM	0	2	0	1	1	4	0	1	0	1	0	1	0	0	0	0	11	0
4:45 PM	0	3	0	2	0	2	0	2	0	0	0	0	0	0	0	0	9	0
4:50 PM	0	1	0	0	0	8	0	2	0	1	0	2	0	0	0	0	14	0
4:55 PM	0	2	0	2	0	1	0	2	0	0	0	1	0	0	0	0	8	0
5:00 PM	0	3	0	1	0	0	0	7	0	0	0	0	0	0	0	0	11	0
5:05 PM	0	2	0	0	1	3	0	5	0	0	0	1	0	0	0	0	12	0
5:10 PM	0	2	0	0	1	4	0	1	0	0	0	0	0	0	0	0	8	0
5:15 PM	0	2	0	0	1	1	0	3	1	0	0	1	0	0	0	0	9	0
5:20 PM	0	0	0	2	1	3	0	3	0	0	0	0	0	1	0	0	9	1
5:25 PM	0	4	0	1	0	3	0	0	1	1	0	1	0	0	0	0	11	0
5:30 PM	0	1	0	0	0	1	0	1	0	0	0	1	0	0	0	0	4	0
5:35 PM	0	2	0	0	1	8	0	1	0	0	0	0	0	0	0	1	12	1
5:40 PM	0	2	0	1	2	3	0	1	2	0	0	1	1	0	0	0	12	1
5:45 PM	0	2	0	1	0	3	0	0	0	1	0	0	0	0	0	0	7	0
5:50 PM	0	1	0	2	0	2	0	0	0	1	0	0	0	0	0	0	6	0
5:55 PM	0	0	0	0	1	1	0	4	0	2	0	0	0	0	0	0	8	0

HOURLY TOTALS	Southbound			Westbound			Northbound			Eastbound			Pedestrians By Approach				TOTAL	
	Right	Thru	Left	Right	Thru	Left	Right	Thru	Left	Right	Thru	Left	West	East	North	South	Veh	Peds
4:00 PM	0	17	0	13	7	37	0	28	4	7	0	8	2	6	2	4	121	14
4:15 PM	0	19	0	13	4	35	0	32	4	5	0	9	2	5	1	3	121	11
4:30 PM	0	24	0	12	6	38	0	33	5	4	0	7	0	1	0	0	129	1
4:45 PM	0	24	0	9	7	37	0	28	4	2	0	8	1	1	0	1	119	3
5:00 PM	0	21	0	8	8	32	0	26	4	5	0	5	1	1	0	1	109	3

Version 3.1

INTERSECTION:	*Thomas St--/Petronia St--*	**START TIME:**	*7:00 AM*
PROJECT ID#:		**END TIME:**	*9:00 AM*
QC JOB #:	*10134212*	**DATE:**	*12/28/2005*

QUALITY COUNTS
16285 SW 85th Avenue, Ste. 105
Tigard, OR 97224
Phone: 503-620-4242
Fax: 503 620-4545
email: jrw@qualitycounts.net
www.qualitycounts.net

PEAK HOUR TURNING MOVEMENTS

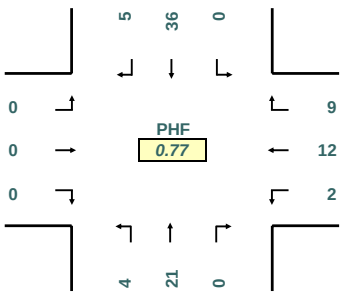

PEAK HOUR LINK VOLUMES

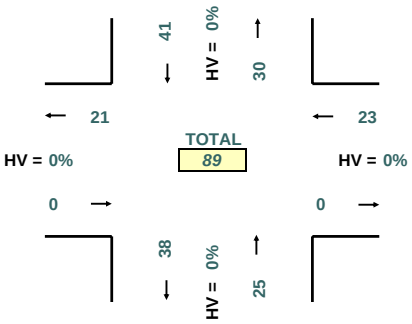

PEAK HOUR PED CROSSING VOLUMES

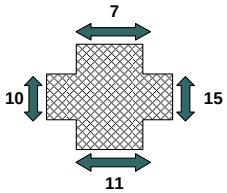

PEAK HOUR: 8:00 AM TO 9:00 AM

PEAK 15 MINUTES: 8:45 AM TO 9:00 AM

5-MINUTE COUNT PERIOD BEGINNING AT	*Thomas St--* (Southbound)			*Petronia St--* (Westbound)			*Thomas St--* (Northbound)			*Petronia St--* (Eastbound)			Crosswalk Usage (Peds By Approach)				TOTAL	
	Right	Thru	Left	Right	Thru	Left	Right	Thru	Left	Right	Thru	Left	North	East	South	West	Veh	Peds
7:00 AM	0	2	0	0	0	1	0	3	0	0	0	0	0	0	0	1	6	1
7:05 AM	0	0	0	0	0	2	0	1	0	0	0	0	1	0	1	1	3	3
7:10 AM	0	0	0	0	0	0	0	2	2	0	0	0	0	4	0	0	4	4
7:15 AM	0	0	0	1	0	0	0	1	1	0	0	0	0	0	1	3	3	4
7:20 AM	0	3	0	0	0	0	0	2	0	0	0	0	0	1	1	0	5	2
7:25 AM	1	2	0	0	0	0	0	2	0	0	0	0	0	0	3	0	5	3
7:30 AM	0	1	0	1	3	0	0	0	0	0	0	0	0	0	1	0	5	1
7:35 AM	0	1	0	0	1	0	0	1	1	0	0	0	2	2	1	0	4	5
7:40 AM	0	2	0	0	1	0	0	0	0	0	0	0	2	1	1	0	3	4
7:45 AM	0	0	0	0	1	1	0	2	0	0	0	0	1	2	0	0	4	3
7:50 AM	0	1	0	1	2	0	0	4	0	0	0	0	0	1	0	1	8	2
7:55 AM	1	0	0	0	3	0	0	5	0	0	0	0	1	1	0	0	9	2
8:00 AM	0	1	0	0	3	0	0	4	0	0	0	0	0	1	2	0	8	3
8:05 AM	0	0	0	0	1	0	0	0	0	0	0	0	0	0	0	1	1	1
8:10 AM	0	2	0	1	1	0	0	3	1	0	0	0	1	0	1	3	8	5
8:15 AM	1	3	0	0	0	0	0	1	0	0	0	0	0	1	0	1	5	2
8:20 AM	0	2	0	0	2	1	0	2	1	0	0	0	0	1	1	0	8	2
8:25 AM	0	4	0	0	2	1	0	1	1	0	0	0	0	2	0	0	9	2
8:30 AM	0	0	0	0	2	0	0	1	0	0	0	0	2	3	0	0	3	5
8:35 AM	1	1	0	1	0	0	0	3	0	0	0	0	1	1	2	1	6	5
8:40 AM	0	8	0	3	1	0	0	0	0	0	0	0	2	1	1	1	12	5
8:45 AM	1	4	0	1	0	0	0	2	0	0	0	0	1	2	1	1	8	5
8:50 AM	2	6	0	2	0	0	0	3	1	0	0	0	0	1	2	2	14	5
8:55 AM	0	5	0	1	0	0	0	1	0	0	0	0	0	2	1	0	7	3

HOURLY TOTALS	Southbound			Westbound			Northbound			Eastbound			Pedestrians By Approach				TOTAL	
	Right	Thru	Left	Right	Thru	Left	Right	Thru	Left	Right	Thru	Left	West	East	North	South	Veh	Peds
7:00 AM	2	12	0	3	11	4	0	23	4	0	0	0	7	12	9	6	59	34
7:15 AM	2	13	0	4	16	1	0	24	3	0	0	0	7	9	11	8	63	35
7:30 AM	2	17	0	3	20	3	0	23	4	0	0	0	7	12	7	6	72	32
7:45 AM	3	22	0	6	18	3	0	26	3	0	0	0	8	14	7	8	81	37
8:00 AM	5	36	0	9	12	2	0	21	4	0	0	0	7	15	11	10	89	43

Version 3.1

INTERSECTION:	*Thomas St--/Petronia St--*	**START TIME:**	*4:00 PM*
PROJECT ID#:		**END TIME:**	*6:00 PM*
QC JOB #:	*10134226*	**DATE:**	*12/20/2005*

QUALITY COUNTS
16285 SW 85th Avenue, Ste. 105
Tigard, OR 97224
Phone: 503-620-4242
Fax: 503 620-4545
email: jrw@qualitycounts.net
www.qualitycounts.net

PEAK HOUR TURNING MOVEMENTS

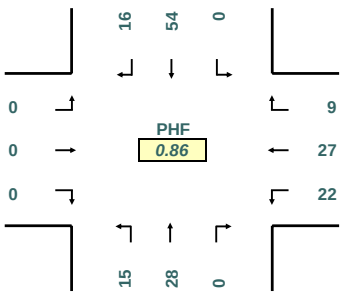

PEAK HOUR LINK VOLUMES

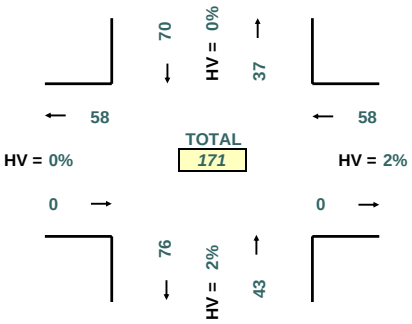

PEAK HOUR PED CROSSING VOLUMES

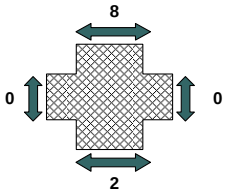

PEAK HOUR: 4:00 PM TO 5:00 PM

PEAK 15 MINUTES: 4:00 PM TO 4:15 PM

5-MINUTE COUNT PERIOD BEGINNING AT	*Thomas St--* (Southbound)			*Petronia St--* (Westbound)			*Thomas St--* (Northbound)			*Petronia St--* (Eastbound)			Crosswalk Usage (Peds By Approach)				TOTAL	
	Right	Thru	Left	Right	Thru	Left	Right	Thru	Left	Right	Thru	Left	North	East	South	West	Veh	Peds
4:00 PM	3	2	0	2	2	5	0	4	2	0	0	0	0	0	0	0	20	0
4:05 PM	0	5	0	0	5	3	0	4	3	0	0	0	0	0	0	0	20	0
4:10 PM	0	2	0	2	2	1	0	3	0	0	0	0	1	0	1	0	10	2
4:15 PM	4	3	0	1	1	3	0	4	1	0	0	0	0	0	1	0	17	1
4:20 PM	0	6	0	0	0	0	0	1	3	0	0	0	1	0	0	0	10	1
4:25 PM	2	3	0	1	4	4	0	2	3	0	0	0	1	0	0	0	19	1
4:30 PM	1	4	0	0	1	1	0	1	2	0	0	0	1	0	0	0	10	1
4:35 PM	1	2	0	0	2	1	0	1	0	0	0	0	2	0	0	0	7	2
4:40 PM	1	5	0	2	1	2	0	2	0	0	0	0	2	0	0	0	13	2
4:45 PM	2	5	0	1	4	0	0	0	1	0	0	0	0	0	0	0	13	0
4:50 PM	1	5	0	0	3	1	0	3	0	0	0	0	0	0	0	0	13	0
4:55 PM	1	12	0	0	2	1	0	3	0	0	0	0	0	0	0	0	19	0
5:00 PM	0	5	0	2	2	0	0	1	3	0	0	0	4	0	0	0	13	4
5:05 PM	1	4	0	0	3	2	0	7	0	0	0	0	0	0	0	0	17	0
5:10 PM	0	8	0	2	2	0	0	2	0	0	0	0	0	0	0	0	14	0
5:15 PM	2	1	0	1	7	0	0	4	1	0	0	0	0	0	0	0	16	0
5:20 PM	0	7	0	1	2	0	0	3	1	0	0	0	0	0	0	0	14	0
5:25 PM	3	4	0	3	3	1	0	0	0	0	0	0	7	0	0	0	14	7
5:30 PM	0	2	0	0	3	0	0	3	1	0	0	0	0	0	0	0	9	0
5:35 PM	1	4	0	0	3	0	0	2	0	0	0	0	0	0	0	0	10	0
5:40 PM	0	5	0	3	4	4	0	0	2	0	0	0	0	0	0	0	18	0
5:45 PM	0	1	0	1	3	1	0	2	1	0	0	0	0	0	0	0	9	0
5:50 PM	0	2	0	0	4	1	0	1	2	0	0	0	0	0	0	0	10	0
5:55 PM	0	2	0	1	3	1	0	1	2	0	0	0	0	0	0	0	10	0

HOURLY TOTALS	Southbound			Westbound			Northbound			Eastbound			Pedestrians By Approach				TOTAL	
	Right	Thru	Left	Right	Thru	Left	Right	Thru	Left	Right	Thru	Left	West	East	North	South	Veh	Peds
4:00 PM	16	54	0	9	27	22	0	28	15	0	0	0	8	0	2	0	171	10
4:15 PM	14	62	0	9	25	15	0	27	13	0	0	0	11	0	1	0	165	12
4:30 PM	13	62	0	12	32	9	0	27	8	0	0	0	16	0	0	0	163	16
4:45 PM	11	62	0	13	38	9	0	28	9	0	0	0	11	0	0	0	170	11
5:00 PM	7	45	0	14	39	10	0	26	13	0	0	0	11	0	0	0	154	11

Version 3.1

INTERSECTION:	*Thomas St--/Angela St--*	**START TIME:**	*7:00 AM*
PROJECT ID#:		**END TIME:**	*9:00 AM*
QC JOB #:	*10134213*	**DATE:**	*12/20/2005*

QUALITY COUNTS
16285 SW 85th Avenue, Ste. 105
Tigard, OR 97224
Phone: 503-620-4242
Fax: 503 620-4545
email: jrw@qualitycounts.net
www.qualitycounts.net

PEAK HOUR TURNING MOVEMENTS

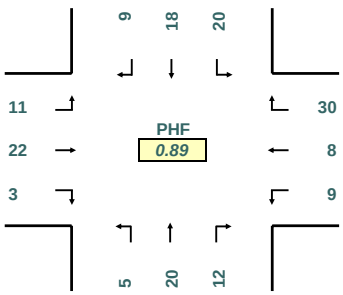

PEAK HOUR LINK VOLUMES

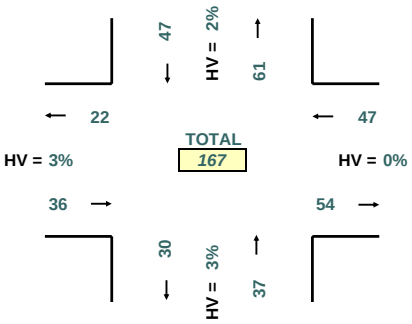

PEAK HOUR PED CROSSING VOLUMES

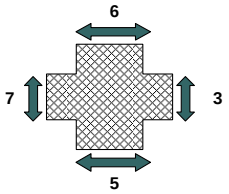

PEAK HOUR: 7:45 AM TO 8:45 AM

PEAK 15 MINUTES: 8:30 AM TO 8:45 AM

5-MINUTE COUNT PERIOD BEGINNING AT	*Thomas St--* (Southbound)			*Angela St--* (Westbound)			*Thomas St--* (Northbound)			*Angela St--* (Eastbound)			Crosswalk Usage (Peds By Approach)				TOTAL	
	Right	Thru	Left	Right	Thru	Left	Right	Thru	Left	Right	Thru	Left	North	East	South	West	Veh	Peds
7:00 AM	0	2	0	2	2	0	1	0	0	0	2	0	1	0	1	0	9	2
7:05 AM	0	0	2	1	0	0	0	1	0	0	1	0	1	0	0	1	5	2
7:10 AM	0	0	0	1	0	0	0	2	0	0	2	1	0	0	0	0	6	0
7:15 AM	0	1	0	0	0	0	0	1	0	0	1	0	0	0	1	0	3	1
7:20 AM	0	3	1	0	1	0	0	2	0	0	1	0	0	0	0	0	8	0
7:25 AM	1	0	0	2	0	1	1	1	0	2	2	0	0	0	1	1	10	2
7:30 AM	0	1	0	2	0	0	0	0	0	0	0	3	1	0	1	1	6	3
7:35 AM	2	0	0	5	0	2	0	0	0	0	8	2	0	0	0	0	19	0
7:40 AM	0	1	4	6	1	1	0	0	0	0	4	2	1	0	0	1	19	2
7:45 AM	0	0	2	1	0	1	2	0	0	0	1	1	1	1	1	1	8	4
7:50 AM	0	1	2	3	0	1	1	4	1	0	3	0	0	0	0	0	16	0
7:55 AM	0	0	1	4	0	1	4	2	0	0	0	1	1	0	2	0	13	3
8:00 AM	0	1	0	4	2	2	1	2	1	1	2	2	1	0	1	0	18	2
8:05 AM	0	0	0	1	0	0	0	2	0	0	1	1	0	0	0	1	5	1
8:10 AM	1	3	2	1	1	0	1	2	0	0	4	1	1	0	0	0	16	1
8:15 AM	2	2	1	2	0	1	2	1	1	0	4	1	0	1	0	1	17	2
8:20 AM	1	2	2	4	0	1	0	2	0	0	3	1	0	1	0	0	16	1
8:25 AM	0	3	2	2	2	0	0	1	0	0	0	1	0	0	0	1	11	1
8:30 AM	0	2	3	3	1	1	0	2	1	1	2	1	1	0	0	1	17	2
8:35 AM	2	4	2	4	1	0	1	1	1	0	0	1	0	0	1	1	17	2
8:40 AM	3	0	3	1	1	1	0	1	0	1	2	0	1	0	0	1	13	2
8:45 AM	0	0	0	2	1	0	0	1	0	0	0	1	0	0	0	0	5	0
8:50 AM	2	1	2	1	0	2	0	0	1	1	3	0	0	0	0	0	13	0
8:55 AM	1	0	1	2	1	0	1	2	0	1	1	2	0	0	0	0	12	0

HOURLY TOTALS	Southbound			Westbound			Northbound			Eastbound			Pedestrians By Approach				TOTAL	
	Right	Thru	Left	Right	Thru	Left	Right	Thru	Left	Right	Thru	Left	West	East	North	South	Veh	Peds
7:00 AM	3	9	12	27	4	7	9	13	1	2	25	10	6	1	7	5	122	19
7:15 AM	4	11	12	29	5	9	10	16	2	3	27	13	6	1	7	5	141	19
7:30 AM	6	14	16	35	6	10	11	16	3	1	30	16	6	3	5	6	164	20
7:45 AM	9	18	20	30	8	9	12	20	5	3	22	11	6	3	5	7	167	21
8:00 AM	12	18	18	27	10	8	6	17	5	5	22	12	4	2	2	6	160	14

Version 3.1

INTERSECTION:	*Thomas--/Angela St.--*	**START TIME:**	*4:00 PM*
PROJECT ID#:		**END TIME:**	*6:00 PM*
QC JOB #:	*10134227*	**DATE:**	*12/20/2005*

QUALITY COUNTS
16285 SW 85th Avenue, Ste. 105
Tigard, OR 97224
Phone: 503-620-4242
Fax: 503 620-4545
email: jrw@qualitycounts.net
www.qualitycounts.net

PEAK HOUR TURNING MOVEMENTS

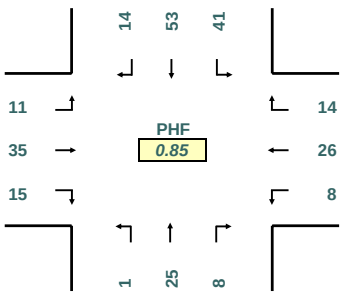

PEAK HOUR LINK VOLUMES

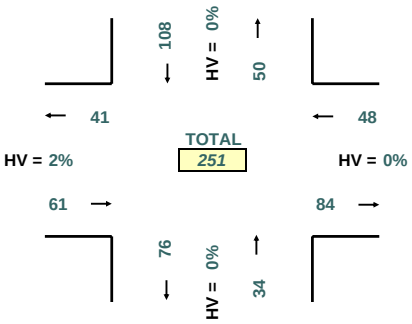

PEAK HOUR PED CROSSING VOLUMES

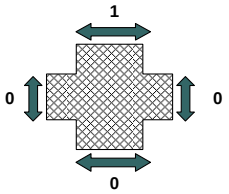

PEAK HOUR: 4:30 PM TO 5:30 PM

PEAK 15 MINUTES: 4:45 PM TO 5:00 PM

5-MINUTE COUNT PERIOD BEGINNING AT	*Thomas--* (Southbound)			*Angela St.--* (Westbound)			*Thomas--* (Northbound)			*Angela St.--* (Eastbound)			Crosswalk Usage (Peds By Approach)				TOTAL	
	Right	Thru	Left	Right	Thru	Left	Right	Thru	Left	Right	Thru	Left	North	East	South	West	Veh	Peds
4:00 PM	0	3	1	0	0	2	1	6	0	0	3	2	0	0	0	0	18	0
4:05 PM	0	3	2	1	0	1	1	3	0	0	3	1	0	0	0	0	15	0
4:10 PM	0	1	1	0	3	0	3	0	0	0	1	2	0	0	0	0	11	0
4:15 PM	0	3	3	1	4	0	2	2	0	1	4	1	0	0	0	0	21	0
4:20 PM	0	2	2	0	1	0	1	1	1	3	4	1	0	0	0	0	16	0
4:25 PM	1	1	3	0	0	1	3	0	0	3	3	1	2	0	0	0	16	2
4:30 PM	0	2	4	1	0	1	0	0	0	3	0	2	0	0	0	0	13	0
4:35 PM	0	2	1	1	6	1	1	0	0	2	2	4	0	0	0	0	20	0
4:40 PM	2	5	4	2	4	1	0	4	0	2	2	0	0	0	0	0	26	0
4:45 PM	0	6	0	0	1	0	0	1	0	0	6	0	0	0	0	0	14	0
4:50 PM	2	5	3	2	2	1	1	1	0	0	3	1	0	0	0	0	21	0
4:55 PM	3	10	8	2	5	0	0	3	0	3	4	1	0	0	0	0	39	0
5:00 PM	2	3	8	1	1	1	1	1	0	1	2	1	0	0	0	0	22	0
5:05 PM	2	5	2	2	1	0	2	4	0	0	3	0	0	0	0	0	21	0
5:10 PM	0	5	3	1	2	1	2	3	0	1	3	0	0	0	0	0	21	0
5:15 PM	0	3	3	2	1	0	0	3	1	1	5	1	0	0	0	0	20	0
5:20 PM	0	3	4	0	3	0	1	1	0	1	1	1	1	0	0	0	15	1
5:25 PM	3	4	1	0	0	2	0	4	0	1	4	0	0	0	0	0	19	0
5:30 PM	3	2	1	0	1	2	2	2	0	0	7	0	0	0	0	0	20	0
5:35 PM	1	3	1	1	0	1	1	1	1	1	1	2	0	0	0	0	14	0
5:40 PM	0	4	2	0	0	0	2	0	1	0	2	1	0	0	0	0	12	0
5:45 PM	0	3	4	0	0	0	2	1	0	0	4	0	0	0	0	0	14	0
5:50 PM	1	1	2	0	1	1	3	1	0	0	7	0	0	0	0	0	17	0
5:55 PM	0	2	5	1	4	0	0	2	0	1	3	2	0	0	0	0	20	0

HOURLY TOTALS	Southbound			Westbound			Northbound			Eastbound			Pedestrians By Approach				TOTAL	
	Right	Thru	Left	Right	Thru	Left	Right	Thru	Left	Right	Thru	Left	West	East	North	South	Veh	Peds
4:00 PM	8	43	32	10	26	8	13	21	1	17	35	16	2	0	0	0	230	2
4:15 PM	12	49	41	13	27	7	13	20	1	19	36	12	2	0	0	0	250	2
4:30 PM	14	53	41	14	26	8	8	25	1	15	35	11	1	0	0	0	251	1
4:45 PM	16	53	36	11	17	8	12	24	3	9	41	8	1	0	0	0	238	1
5:00 PM	12	38	36	8	14	8	16	23	3	7	42	8	1	0	0	0	215	1

Version 3.1

INTERSECTION:	*Thomas--/Southerd--*	**START TIME:**	*7:00 AM*
PROJECT ID#:		**END TIME:**	*9:00 AM*
QC JOB #:	*10134202*	**DATE:**	*12/20/2005*

QUALITY COUNTS
16285 SW 85th Avenue, Ste. 105
Tigard, OR 97224
Phone: 503-620-4242
Fax: 503 620-4545
email: jrw@qualitycounts.net
www.qualitycounts.net

PEAK HOUR TURNING MOVEMENTS

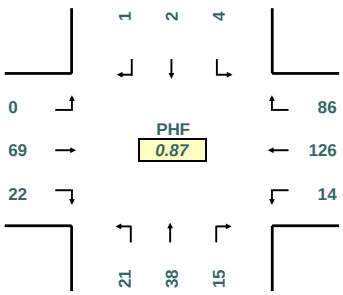

PEAK HOUR LINK VOLUMES

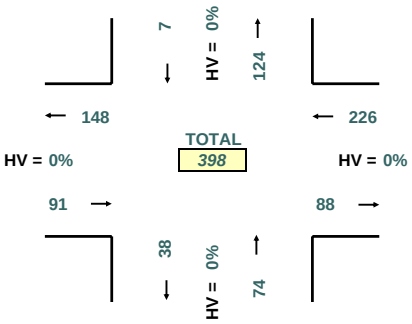

PEAK HOUR PED CROSSING VOLUMES

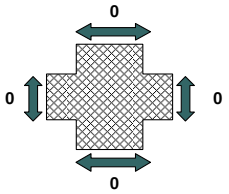

PEAK HOUR: 7:45 AM TO 8:45 AM

PEAK 15 MINUTES: 8:30 AM TO 8:45 AM

5-MINUTE COUNT PERIOD BEGINNING AT	*Thomas--* (Southbound)			*Southerd--* (Westbound)			*Thomas--* (Northbound)			*Southerd--* (Eastbound)			Crosswalk Usage (Peds By Approach)				TOTAL	
	Right	Thru	Left	Right	Thru	Left	Right	Thru	Left	Right	Thru	Left	North	East	South	West	Veh	Peds
7:00 AM	0	0	0	2	6	0	3	0	1	0	0	0	1	0	0	0	12	1
7:05 AM	0	0	0	1	4	1	2	0	1	0	0	0	0	0	0	0	9	0
7:10 AM	0	0	0	1	9	0	1	0	3	0	5	0	0	0	0	0	19	0
7:15 AM	0	0	0	2	13	3	0	0	2	0	4	0	0	0	0	0	24	0
7:20 AM	1	0	0	1	7	2	2	0	0	3	7	0	0	0	0	0	23	0
7:25 AM	0	0	0	0	8	0	2	0	2	0	5	0	0	0	0	0	17	0
7:30 AM	0	0	0	4	10	1	3	1	1	1	6	0	0	0	0	0	27	0
7:35 AM	0	0	0	4	13	2	1	1	5	2	3	0	0	0	0	0	31	0
7:40 AM	0	0	0	4	7	0	2	4	3	2	3	0	1	0	0	0	25	1
7:45 AM	0	0	0	7	14	2	1	3	1	1	5	0	0	0	0	0	34	0
7:50 AM	0	0	1	1	12	0	1	3	3	3	4	0	0	0	0	0	28	0
7:55 AM	0	0	0	11	7	0	1	2	3	2	6	0	0	0	0	0	32	0
8:00 AM	1	0	0	5	12	2	1	2	2	2	4	0	0	0	0	0	31	0
8:05 AM	0	0	0	7	9	1	1	3	2	2	5	0	0	0	0	0	30	0
8:10 AM	0	0	0	8	10	1	2	4	1	2	4	0	0	0	0	0	32	0
8:15 AM	0	0	1	9	13	1	1	3	2	1	3	0	0	0	0	0	34	0
8:20 AM	0	0	0	8	11	1	1	5	1	1	4	0	0	0	0	0	32	0
8:25 AM	0	0	0	9	8	0	2	4	0	2	6	0	0	0	0	0	31	0
8:30 AM	0	0	1	12	14	2	0	3	2	1	9	0	0	0	0	0	44	0
8:35 AM	0	0	1	7	8	1	1	5	1	3	11	0	0	0	0	0	38	0
8:40 AM	0	2	0	2	8	3	3	1	3	2	8	0	0	0	0	0	32	0
8:45 AM	0	1	1	4	6	2	2	2	2	1	7	0	0	0	0	0	28	0
8:50 AM	0	0	2	6	5	2	1	3	3	1	9	0	0	0	0	0	32	0
8:55 AM	0	1	1	5	7	5	2	3	1	2	6	0	0	0	0	0	33	0

HOURLY TOTALS	Southbound			Westbound			Northbound			Eastbound			Pedestrians By Approach				TOTAL	
	Right	Thru	Left	Right	Thru	Left	Right	Thru	Left	Right	Thru	Left	West	East	North	South	Veh	Peds
7:00 AM	1	0	1	38	110	11	19	14	25	14	48	0	2	0	0	0	281	2
7:15 AM	2	0	1	54	122	14	17	23	25	20	56	0	1	0	0	0	334	1
7:30 AM	1	0	2	77	126	11	17	35	24	21	53	0	1	0	0	0	367	1
7:45 AM	1	2	4	86	126	14	15	38	21	22	69	0	0	0	0	0	398	0
8:00 AM	1	4	7	82	111	21	17	38	20	20	76	0	0	0	0	0	397	0

Version 3.1

INTERSECTION:	*Truman--/Emma--*	**START TIME:**	*7:00 AM*
PROJECT ID#:		**END TIME:**	*9:00 AM*
QC JOB #:	*10134208*	**DATE:**	*12/20/2005*

QUALITY COUNTS
16285 SW 85th Avenue, Ste. 105
Tigard, OR 97224
Phone: 503-620-4242
Fax: 503 620-4545
email: jrw@qualitycounts.net
www.qualitycounts.net

PEAK HOUR TURNING MOVEMENTS

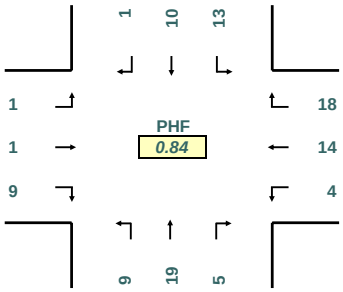

PEAK HOUR LINK VOLUMES

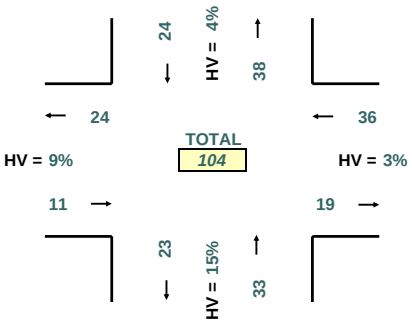

PEAK HOUR: 7:45 AM TO 8:45 AM

PEAK 15 MINUTES: 8:15 AM TO 8:30 AM

PEAK HOUR PED CROSSING VOLUMES

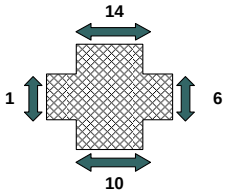

5-MINUTE COUNT PERIOD BEGINNING AT	*Truman--* (Southbound)			*Emma--* (Westbound)			*Truman--* (Northbound)			*Emma--* (Eastbound)			Crosswalk Usage (Peds By Approach)				TOTAL	
	Right	Thru	Left	Right	Thru	Left	Right	Thru	Left	Right	Thru	Left	North	East	South	West	Veh	Peds
7:00 AM	0	0	1	1	0	0	0	2	0	0	0	0	0	0	0	0	4	0
7:05 AM	0	1	0	1	0	0	0	0	1	0	2	0	0	1	0	0	5	1
7:10 AM	1	1	0	0	0	1	1	1	1	1	1	0	2	0	0	0	8	2
7:15 AM	0	1	0	2	1	0	0	0	0	3	0	0	0	0	2	0	7	2
7:20 AM	0	1	1	2	0	0	0	1	0	0	1	0	0	0	0	0	6	0
7:25 AM	0	1	1	0	1	0	2	5	0	0	3	0	0	0	0	0	13	0
7:30 AM	0	1	1	1	1	0	0	2	3	0	1	1	0	0	0	1	11	1
7:35 AM	0	2	1	1	0	3	0	0	0	1	1	0	3	0	0	0	9	3
7:40 AM	0	1	1	0	0	0	0	0	0	1	1	0	3	0	0	0	4	3
7:45 AM	0	1	0	1	1	0	1	1	0	0	0	1	0	0	1	0	6	1
7:50 AM	0	1	0	1	0	0	1	2	1	0	0	0	0	0	0	0	6	0
7:55 AM	0	1	0	2	4	0	1	1	0	0	0	0	1	0	4	0	9	5
8:00 AM	0	0	0	1	2	0	1	3	1	0	0	0	2	1	0	0	8	3
8:05 AM	0	1	0	3	0	0	0	1	2	1	0	0	1	0	0	0	8	1
8:10 AM	0	1	3	2	1	0	0	3	0	1	0	0	1	1	0	1	11	3
8:15 AM	0	1	0	2	0	1	0	0	1	0	1	0	3	1	1	0	6	5
8:20 AM	0	1	3	1	2	0	0	1	1	3	0	0	0	1	0	0	12	1
8:25 AM	0	1	3	2	2	2	0	2	1	0	0	0	1	0	1	0	13	2
8:30 AM	1	1	2	1	1	0	0	1	0	1	0	0	2	1	1	0	8	4
8:35 AM	0	0	2	0	1	0	0	2	1	1	0	0	1	1	1	0	7	3
8:40 AM	0	1	0	2	0	1	1	2	1	2	0	0	2	0	1	0	10	3
8:45 AM	0	5	0	2	0	0	0	0	0	0	3	0	0	0	2	0	10	2
8:50 AM	0	2	0	1	1	0	0	0	0	0	2	0	0	0	0	0	6	0
8:55 AM	1	1	0	0	1	1	0	0	0	0	1	0	1	0	0	0	5	1

HOURLY TOTALS	Southbound			Westbound			Northbound			Eastbound			Pedestrians By Approach				TOTAL	
	Right	Thru	Left	Right	Thru	Left	Right	Thru	Left	Right	Thru	Left	West	East	North	South	Veh	Peds
7:00 AM	1	12	6	12	8	4	6	15	6	6	10	2	9	1	7	1	88	18
7:15 AM	0	12	8	16	11	3	6	19	7	7	7	2	11	2	7	2	98	22
7:30 AM	0	12	12	17	13	6	4	16	10	7	4	2	15	4	7	2	103	28
7:45 AM	1	10	13	18	14	4	5	19	9	9	1	1	14	6	10	1	104	31
8:00 AM	2	15	13	17	11	5	2	15	8	9	7	0	14	6	7	1	104	28

Version 3.1

INTERSECTION:	*Emma--/Truman--*	**START TIME:**	*4:00 PM*
PROJECT ID#:		**END TIME:**	*6:00 PM*
QC JOB #:	*10134222*	**DATE:**	*12/20/2005*

QUALITY COUNTS
16285 SW 85th Avenue, Ste. 105
Tigard, OR 97224
Phone: 503-620-4242
Fax: 503 620-4545
email: jrw@qualitycounts.net
www.qualitycounts.net

PEAK HOUR TURNING MOVEMENTS

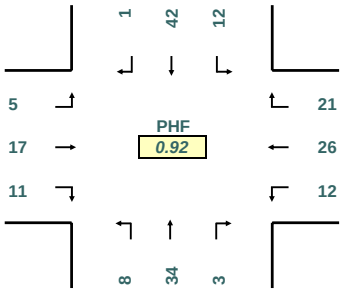

PEAK HOUR LINK VOLUMES

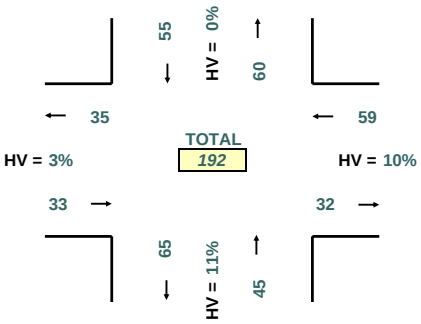

PEAK HOUR PED CROSSING VOLUMES

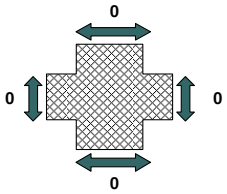

PEAK HOUR: 4:00 PM TO 5:00 PM

PEAK 15 MINUTES: 5:45 PM TO 6:00 PM

5-MINUTE COUNT PERIOD BEGINNING AT	*Emma--* (Southbound)			*Truman--* (Westbound)			*Emma--* (Northbound)			*Truman--* (Eastbound)			Crosswalk Usage (Peds By Approach)				TOTAL	
	Right	Thru	Left	Right	Thru	Left	Right	Thru	Left	Right	Thru	Left	North	East	South	West	Veh	Peds
4:00 PM	0	8	3	1	1	3	0	1	1	1	0	0	0	0	0	0	19	0
4:05 PM	1	0	0	1	1	2	0	1	1	1	0	0	0	0	0	0	8	0
4:10 PM	0	1	3	5	2	1	0	4	0	3	5	1	0	0	0	0	25	0
4:15 PM	0	4	1	0	4	0	0	3	0	1	1	0	0	0	0	0	14	0
4:20 PM	0	3	1	4	1	1	0	2	0	0	0	0	0	0	0	0	12	0
4:25 PM	0	6	0	3	0	0	1	4	1	1	3	0	0	0	0	0	19	0
4:30 PM	0	2	1	3	3	1	0	0	0	1	2	0	0	0	0	0	13	0
4:35 PM	0	5	2	0	4	1	1	4	1	0	0	0	0	0	0	0	18	0
4:40 PM	0	3	0	1	3	0	0	3	1	0	1	0	0	0	0	0	12	0
4:45 PM	0	3	1	1	4	2	0	7	1	1	0	2	0	0	0	0	22	0
4:50 PM	0	5	0	2	2	1	0	3	2	1	1	0	0	0	0	0	17	0
4:55 PM	0	2	0	0	1	0	1	2	0	1	4	2	0	0	0	0	13	0
5:00 PM	0	3	0	0	1	1	0	5	0	0	1	0	0	0	0	0	11	0
5:05 PM	2	4	0	2	1	1	0	3	0	0	0	1	0	0	0	0	14	0
5:10 PM	0	4	0	0	3	0	0	0	1	0	2	0	0	0	0	0	10	0
5:15 PM	1	3	0	0	1	1	1	3	1	3	1	0	0	0	0	0	15	0
5:20 PM	1	3	0	1	1	0	1	1	0	0	1	0	0	0	0	0	9	0
5:25 PM	0	5	0	6	3	1	1	3	1	0	1	0	0	0	0	0	21	0
5:30 PM	0	5	0	4	1	2	0	2	0	3	2	1	0	0	0	0	20	0
5:35 PM	0	8	0	2	1	1	0	2	1	0	0	0	0	0	0	0	15	0
5:40 PM	0	6	0	4	1	1	0	3	0	1	0	0	0	0	0	0	16	0
5:45 PM	1	5	5	3	4	0	1	3	0	0	2	0	0	0	0	0	24	0
5:50 PM	1	1	1	2	1	0	0	4	0	1	3	0	0	0	0	0	14	0
5:55 PM	1	4	2	3	1	0	0	1	0	2	2	0	0	0	0	0	16	0

HOURLY TOTALS	Southbound			Westbound			Northbound			Eastbound			Pedestrians By Approach				TOTAL	
	Right	Thru	Left	Right	Thru	Left	Right	Thru	Left	Right	Thru	Left	West	East	North	South	Veh	Peds
4:00 PM	1	42	12	21	26	12	3	34	8	11	17	5	0	0	0	0	192	0
4:15 PM	2	44	6	16	27	8	3	36	7	6	15	5	0	0	0	0	175	0
4:30 PM	4	42	4	16	27	9	5	34	8	7	14	5	0	0	0	0	175	0
4:45 PM	4	51	1	22	20	11	4	34	7	10	13	6	0	0	0	0	183	0
5:00 PM	7	51	8	27	19	8	4	30	4	10	15	2	0	0	0	0	185	0

Version 3.1

INTERSECTION:	*Thomas St--/Truman St--*	**START TIME:**	*7:00 AM*
PROJECT ID#:		**END TIME:**	*9:00 AM*
QC JOB #:	*10134207*	**DATE:**	*12/20/2005*

QUALITY COUNTS
16285 SW 85th Avenue, Ste. 105
Tigard, OR 97224
Phone: 503-620-4242
Fax: 503 620-4545
email: jrw@qualitycounts.net
www.qualitycounts.net

PEAK HOUR TURNING MOVEMENTS

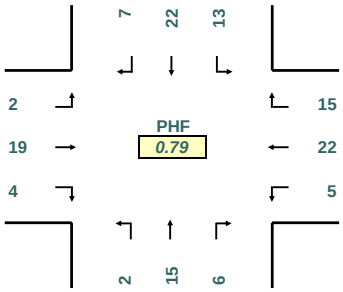

PEAK HOUR LINK VOLUMES

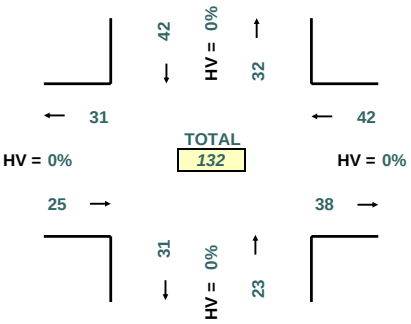

PEAK HOUR PED CROSSING VOLUMES

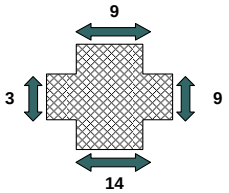

PEAK HOUR: 8:00 AM TO 9:00 AM

PEAK 15 MINUTES: 8:45 AM TO 9:00 AM

5-MINUTE COUNT PERIOD BEGINNING AT	*Thomas St--* (Southbound)			*Truman St--* (Westbound)			*Thomas St--* (Northbound)			*Truman St--* (Eastbound)			Crosswalk Usage (Peds By Approach)				TOTAL	
	Right	Thru	Left	Right	Thru	Left	Right	Thru	Left	Right	Thru	Left	North	East	South	West	Veh	Peds
7:00 AM	0	0	1	4	3	2	1	2	0	0	1	0	0	0	0	0	14	0
7:05 AM	0	0	1	0	0	0	0	0	0	0	0	0	6	1	0	0	1	7
7:10 AM	0	0	0	1	2	0	0	0	0	0	4	0	1	0	1	0	7	2
7:15 AM	0	0	0	0	4	0	1	1	0	0	0	0	0	1	1	0	6	2
7:20 AM	0	1	1	0	1	0	0	2	0	0	2	0	0	0	1	0	7	1
7:25 AM	0	0	1	0	1	1	0	1	0	0	1	0	0	0	0	0	5	0
7:30 AM	0	3	1	0	2	0	0	1	0	0	4	0	0	0	1	0	11	1
7:35 AM	1	1	0	1	2	0	1	0	0	0	3	1	1	1	3	1	10	6
7:40 AM	0	0	2	0	1	0	0	0	0	0	2	0	2	3	1	0	5	6
7:45 AM	0	0	2	1	2	0	1	2	0	0	1	0	1	0	2	0	9	3
7:50 AM	0	1	1	0	0	0	0	2	1	0	2	0	1	1	0	0	7	2
7:55 AM	0	1	1	1	5	0	0	3	0	1	0	0	0	1	4	0	12	5
8:00 AM	1	3	1	2	2	0	1	2	0	0	2	0	1	1	2	0	14	4
8:05 AM	0	1	1	0	3	0	0	0	0	0	2	2	1	0	0	1	9	2
8:10 AM	0	0	1	3	2	0	0	1	0	0	0	0	1	2	0	0	7	3
8:15 AM	1	4	0	0	1	0	0	0	0	1	2	0	0	1	0	0	9	1
8:20 AM	0	1	1	2	3	1	0	2	0	1	1	0	0	1	0	1	12	2
8:25 AM	0	3	3	0	4	1	0	1	0	1	3	0	0	2	0	0	16	2
8:30 AM	0	0	0	0	1	0	3	1	1	0	2	0	0	0	1	1	8	2
8:35 AM	2	2	1	1	2	0	0	2	0	1	0	0	0	1	5	0	11	6
8:40 AM	0	2	0	0	0	0	1	0	0	0	1	0	2	0	3	0	4	5
8:45 AM	1	2	1	3	2	3	1	1	0	0	3	0	2	1	1	0	17	4
8:50 AM	2	3	1	2	0	0	0	1	0	0	1	0	0	0	0	0	10	0
8:55 AM	0	1	3	2	2	0	0	4	1	0	2	0	2	0	2	0	15	4

HOURLY TOTALS	Southbound			Westbound			Northbound			Eastbound			Pedestrians By Approach				TOTAL	
	Right	Thru	Left	Right	Thru	Left	Right	Thru	Left	Right	Thru	Left	West	East	North	South	Veh	Peds
7:00 AM	1	7	11	8	23	3	4	14	1	1	20	1	12	8	14	1	94	35
7:15 AM	2	11	12	8	25	1	4	15	1	1	19	3	8	10	15	2	102	35
7:30 AM	3	18	14	10	27	2	3	14	1	4	22	3	8	13	13	3	121	37
7:45 AM	4	18	12	10	25	2	6	16	2	5	16	2	7	10	17	3	118	37
8:00 AM	7	22	13	15	22	5	6	15	2	4	19	2	9	9	14	3	132	35

Version 3.1

INTERSECTION:	*Thomas St.--/Truman St.--*	**START TIME:**	*4:00 PM*
PROJECT ID#:		**END TIME:**	*6:00 PM*
QC JOB #:	*10134221*	**DATE:**	*12/20/2005*

QUALITY COUNTS
16285 SW 85th Avenue, Ste. 105
Tigard, OR 97224
Phone: 503-620-4242
Fax: 503 620-4545
email: jrw@qualitycounts.net
www.qualitycounts.net

PEAK HOUR TURNING MOVEMENTS

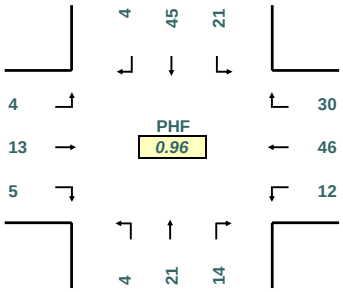

PEAK HOUR LINK VOLUMES

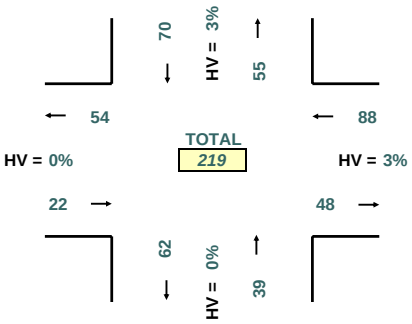

PEAK HOUR PED CROSSING VOLUMES

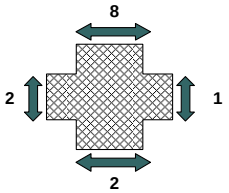

PEAK HOUR: 4:45 PM TO 5:45 PM

PEAK 15 MINUTES: 4:00 PM TO 4:15 PM

5-MINUTE COUNT PERIOD BEGINNING AT	*Thomas St.--* (Southbound)			*Truman St.--* (Westbound)			*Thomas St.--* (Northbound)			*Truman St.--* (Eastbound)			Crosswalk Usage (Peds By Approach)				TOTAL	
	Right	Thru	Left	Right	Thru	Left	Right	Thru	Left	Right	Thru	Left	North	East	South	West	Veh	Peds
4:00 PM	2	3	2	4	2	2	0	2	0	1	4	0	1	0	0	1	22	2
4:05 PM	0	3	3	3	4	1	1	2	1	0	0	0	0	0	1	4	18	5
4:10 PM	0	2	2	2	8	0	1	2	0	0	7	0	3	0	0	1	24	4
4:15 PM	0	5	0	3	3	0	1	1	0	0	2	1	0	0	0	3	16	3
4:20 PM	1	2	2	4	5	0	2	3	0	0	1	0	0	0	1	0	20	1
4:25 PM	0	1	1	1	2	2	0	5	0	1	5	0	0	0	0	0	18	0
4:30 PM	1	4	0	1	6	0	1	2	1	0	2	0	1	0	2	1	18	4
4:35 PM	0	2	1	2	3	0	0	1	0	2	1	0	5	0	0	1	12	6
4:40 PM	1	3	1	2	4	2	1	0	0	1	0	1	0	1	0	0	16	1
4:45 PM	0	6	0	1	4	3	0	0	0	0	0	0	0	0	1	2	14	3
4:50 PM	0	3	2	1	5	0	0	1	1	0	1	2	1	1	0	0	16	2
4:55 PM	0	6	2	1	2	3	2	3	0	1	3	0	0	0	0	0	23	0
5:00 PM	0	4	2	7	3	0	1	1	0	0	1	0	0	0	0	0	19	0
5:05 PM	0	5	4	5	3	0	2	1	0	0	0	0	0	0	0	0	20	0
5:10 PM	0	3	3	5	3	0	0	1	0	2	1	0	2	0	0	0	18	2
5:15 PM	0	4	1	2	3	1	2	5	0	1	1	0	0	0	0	0	20	0
5:20 PM	0	3	1	1	2	2	0	1	0	0	2	1	4	0	0	0	13	4
5:25 PM	1	3	1	1	9	2	2	1	2	0	1	0	0	0	0	0	23	0
5:30 PM	1	2	2	2	4	0	2	3	0	1	2	0	0	0	0	0	19	0
5:35 PM	0	5	1	2	5	1	1	4	1	0	1	0	0	0	0	0	21	0
5:40 PM	2	1	2	2	3	0	2	0	0	0	0	1	1	0	1	0	13	2
5:45 PM	2	3	1	2	5	0	0	0	0	0	8	2	0	0	0	0	23	0
5:50 PM	1	1	0	3	4	2	0	0	1	0	3	0	1	0	1	0	15	2
5:55 PM	0	1	2	2	3	2	1	1	0	0	2	1	0	0	0	0	15	0

HOURLY TOTALS	Southbound			Westbound			Northbound			Eastbound			Pedestrians By Approach				TOTAL	
	Right	Thru	Left	Right	Thru	Left	Right	Thru	Left	Right	Thru	Left	West	East	North	South	Veh	Peds
4:00 PM	5	40	16	25	48	13	9	22	3	6	26	4	11	2	5	13	217	31
4:15 PM	3	44	18	33	43	10	10	19	2	7	17	4	9	2	4	7	210	22
4:30 PM	3	46	18	29	47	13	11	17	4	7	13	4	13	2	3	4	212	22
4:45 PM	4	45	21	30	46	12	14	21	4	5	13	4	8	1	2	2	219	13
5:00 PM	7	35	20	34	47	10	13	18	4	4	22	5	8	0	2	0	219	10

Version 3.1

INTERSECTION:	*Thomas St--/Truman St--*	**START TIME:**	*7:00 AM*
PROJECT ID#:		**END TIME:**	*9:00 AM*
QC JOB #:	*10134207*	**DATE:**	*12/20/2005*

QUALITY COUNTS
16285 SW 85th Avenue, Ste. 105
Tigard, OR 97224
Phone: 503-620-4242
Fax: 503 620-4545
email: jrw@qualitycounts.net
www.qualitycounts.net

PEAK HOUR TURNING MOVEMENTS

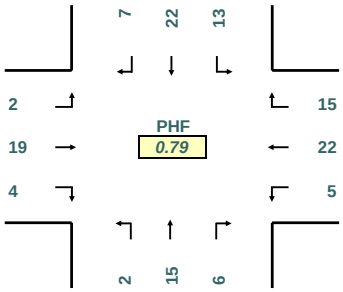

PEAK HOUR LINK VOLUMES

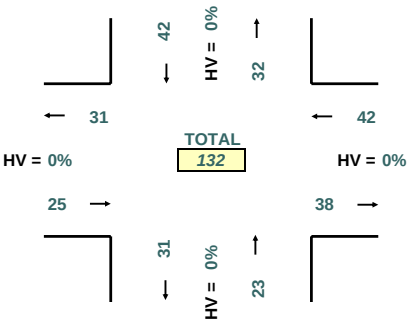

PEAK HOUR PED CROSSING VOLUMES

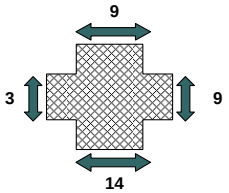

PEAK HOUR: 8:00 AM TO 9:00 AM

PEAK 15 MINUTES: 8:45 AM TO 9:00 AM

5-MINUTE COUNT PERIOD BEGINNING AT	*Thomas St--* (Southbound)			*Truman St--* (Westbound)			*Thomas St--* (Northbound)			*Truman St--* (Eastbound)			Crosswalk Usage (Peds By Approach)				TOTAL	
	Right	Thru	Left	Right	Thru	Left	Right	Thru	Left	Right	Thru	Left	North	East	South	West	Veh	Peds
7:00 AM	0	0	1	4	3	2	1	2	0	0	1	0	0	0	0	0	14	0
7:05 AM	0	0	1	0	0	0	0	0	0	0	0	0	6	1	0	0	1	7
7:10 AM	0	0	0	1	2	0	0	0	0	0	4	0	1	0	1	0	7	2
7:15 AM	0	0	0	0	4	0	1	1	0	0	0	0	0	1	1	0	6	2
7:20 AM	0	1	1	0	1	0	0	2	0	0	2	0	0	0	1	0	7	1
7:25 AM	0	0	1	0	1	1	0	1	0	0	1	0	0	0	0	0	5	0
7:30 AM	0	3	1	0	2	0	0	1	0	0	4	0	0	0	1	0	11	1
7:35 AM	1	1	0	1	2	0	1	0	0	0	3	1	1	1	3	1	10	6
7:40 AM	0	0	2	0	1	0	0	0	0	0	2	0	2	3	1	0	5	6
7:45 AM	0	0	2	1	2	0	1	2	0	0	1	0	1	0	2	0	9	3
7:50 AM	0	1	1	0	0	0	0	2	1	0	2	0	1	1	0	0	7	2
7:55 AM	0	1	1	1	5	0	0	3	0	1	0	0	0	1	4	0	12	5
8:00 AM	1	3	1	2	2	0	1	2	0	0	2	0	1	1	2	0	14	4
8:05 AM	0	1	1	0	3	0	0	0	0	0	2	2	1	0	0	1	9	2
8:10 AM	0	0	1	3	2	0	0	1	0	0	0	0	1	2	0	0	7	3
8:15 AM	1	4	0	0	1	0	0	0	0	1	2	0	0	1	0	0	9	1
8:20 AM	0	1	1	2	3	1	0	2	0	1	1	0	0	1	0	1	12	2
8:25 AM	0	3	3	0	4	1	0	1	0	1	3	0	0	2	0	0	16	2
8:30 AM	0	0	0	0	1	0	3	1	1	0	2	0	0	0	1	1	8	2
8:35 AM	2	2	1	1	2	0	0	2	0	1	0	0	0	1	5	0	11	6
8:40 AM	0	2	0	0	0	0	1	0	0	0	1	0	2	0	3	0	4	5
8:45 AM	1	2	1	3	2	3	1	1	0	0	3	0	2	1	1	0	17	4
8:50 AM	2	3	1	2	0	0	0	1	0	0	1	0	0	0	0	0	10	0
8:55 AM	0	1	3	2	2	0	0	4	1	0	2	0	2	0	2	0	15	4

HOURLY TOTALS	Southbound			Westbound			Northbound			Eastbound			Pedestrians By Approach				TOTAL	
	Right	Thru	Left	Right	Thru	Left	Right	Thru	Left	Right	Thru	Left	West	East	North	South	Veh	Peds
7:00 AM	1	7	11	8	23	3	4	14	1	1	20	1	12	8	14	1	94	35
7:15 AM	2	11	12	8	25	1	4	15	1	1	19	3	8	10	15	2	102	35
7:30 AM	3	18	14	10	27	2	3	14	1	4	22	3	8	13	13	3	121	37
7:45 AM	4	18	12	10	25	2	6	16	2	5	16	2	7	10	17	3	118	37
8:00 AM	7	22	13	15	22	5	6	15	2	4	19	2	9	9	14	3	132	35

Version 3.1

INTERSECTION:	*Thomas St.--/Truman St.--*	**START TIME:**	*4:00 PM*
PROJECT ID#:		**END TIME:**	*6:00 PM*
QC JOB #:	*10134221*	**DATE:**	*12/20/2005*

QUALITY COUNTS
16285 SW 85th Avenue, Ste. 105
Tigard, OR 97224
Phone: 503-620-4242
Fax: 503 620-4545
email: jrw@qualitycounts.net
www.qualitycounts.net

PEAK HOUR TURNING MOVEMENTS

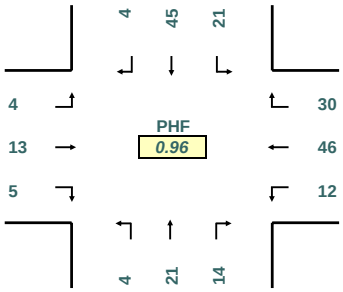

PEAK HOUR LINK VOLUMES

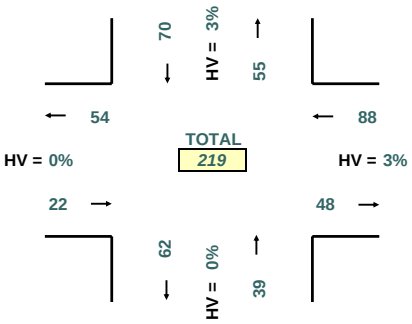

PEAK HOUR PED CROSSING VOLUMES

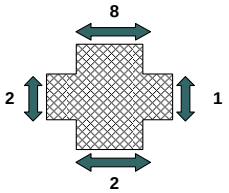

PEAK HOUR: 4:45 PM TO 5:45 PM

PEAK 15 MINUTES: 4:00 PM TO 4:15 PM

5-MINUTE COUNT PERIOD BEGINNING AT	*Thomas St.--* (Southbound)			*Truman St.--* (Westbound)			*Thomas St.--* (Northbound)			*Truman St.--* (Eastbound)			Crosswalk Usage (Peds By Approach)				TOTAL	
	Right	Thru	Left	Right	Thru	Left	Right	Thru	Left	Right	Thru	Left	North	East	South	West	Veh	Peds
4:00 PM	2	3	2	4	2	2	0	2	0	1	4	0	1	0	0	1	22	2
4:05 PM	0	3	3	3	4	1	1	2	1	0	0	0	0	0	1	4	18	5
4:10 PM	0	2	2	2	8	0	1	2	0	0	7	0	3	0	0	1	24	4
4:15 PM	0	5	0	3	3	0	1	1	0	0	2	1	0	0	0	3	16	3
4:20 PM	1	2	2	4	5	0	2	3	0	0	1	0	0	0	1	0	20	1
4:25 PM	0	1	1	1	2	2	0	5	0	1	5	0	0	0	0	0	18	0
4:30 PM	1	4	0	1	6	0	1	2	1	0	2	0	1	0	2	1	18	4
4:35 PM	0	2	1	2	3	0	0	1	0	2	1	0	5	0	0	1	12	6
4:40 PM	1	3	1	2	4	2	1	0	0	1	0	1	0	1	0	0	16	1
4:45 PM	0	6	0	1	4	3	0	0	0	0	0	0	0	0	1	2	14	3
4:50 PM	0	3	2	1	5	0	0	1	1	0	1	2	1	1	0	0	16	2
4:55 PM	0	6	2	1	2	3	2	3	0	1	3	0	0	0	0	0	23	0
5:00 PM	0	4	2	7	3	0	1	1	0	0	1	0	0	0	0	0	19	0
5:05 PM	0	5	4	5	3	0	2	1	0	0	0	0	0	0	0	0	20	0
5:10 PM	0	3	3	5	3	0	0	1	0	2	1	0	2	0	0	0	18	2
5:15 PM	0	4	1	2	3	1	2	5	0	1	1	0	0	0	0	0	20	0
5:20 PM	0	3	1	1	2	2	0	1	0	0	2	1	4	0	0	0	13	4
5:25 PM	1	3	1	1	9	2	2	1	2	0	1	0	0	0	0	0	23	0
5:30 PM	1	2	2	2	4	0	2	3	0	1	2	0	0	0	0	0	19	0
5:35 PM	0	5	1	2	5	1	1	4	1	0	1	0	0	0	0	0	21	0
5:40 PM	2	1	2	2	3	0	2	0	0	0	0	1	1	0	1	0	13	2
5:45 PM	2	3	1	2	5	0	0	0	0	0	8	2	0	0	0	0	23	0
5:50 PM	1	1	0	3	4	2	0	0	1	0	3	0	1	0	1	0	15	2
5:55 PM	0	1	2	2	3	2	1	1	0	0	2	1	0	0	0	0	15	0

HOURLY TOTALS	Southbound			Westbound			Northbound			Eastbound			Pedestrians By Approach				TOTAL	
	Right	Thru	Left	Right	Thru	Left	Right	Thru	Left	Right	Thru	Left	West	East	North	South	Veh	Peds
4:00 PM	5	40	16	25	48	13	9	22	3	6	26	4	11	2	5	13	217	31
4:15 PM	3	44	18	33	43	10	10	19	2	7	17	4	9	2	4	7	210	22
4:30 PM	3	46	18	29	47	13	11	17	4	7	13	4	13	2	3	4	212	22
4:45 PM	4	45	21	30	46	12	14	21	4	5	13	4	8	1	2	2	219	13
5:00 PM	7	35	20	34	47	10	13	18	4	4	22	5	8	0	2	0	219	10

Version 3.1

INTERSECTION:	*Whitehead St--/Olivia St--*	**START TIME:**	*7:00 AM*
PROJECT ID#:		**END TIME:**	*9:00 AM*
QC JOB #:	*10134205*	**DATE:**	*12/20/2005*

QUALITY COUNTS
16285 SW 85th Avenue, Ste. 105
Tigard, OR 97224
Phone: 503-620-4242
Fax: 503 620-4545
email: jrw@qualitycounts.net
www.qualitycounts.net

PEAK HOUR TURNING MOVEMENTS

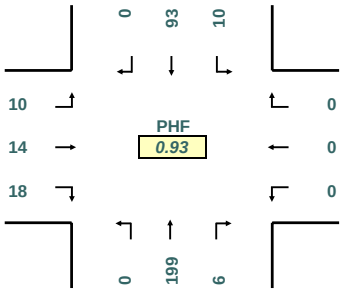

PEAK HOUR LINK VOLUMES

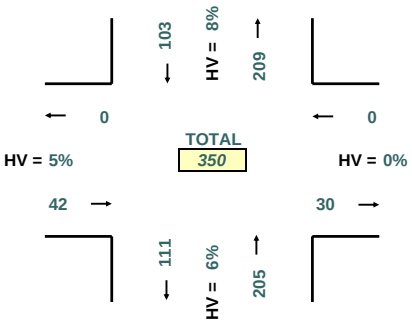

PEAK HOUR PED CROSSING VOLUMES

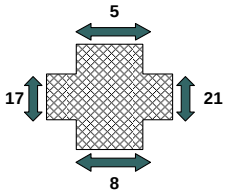

PEAK HOUR: 7:45 AM TO 8:45 AM

PEAK 15 MINUTES: 8:15 AM TO 8:30 AM

5-MINUTE COUNT PERIOD BEGINNING AT	*Whitehead St--* (Southbound)			*Olivia St--* (Westbound)			*Whitehead St--* (Northbound)			*Olivia St--* (Eastbound)			Crosswalk Usage (Peds By Approach)				TOTAL	
	Right	Thru	Left	Right	Thru	Left	Right	Thru	Left	Right	Thru	Left	North	East	South	West	Veh	Peds
7:00 AM	0	7	0	0	0	0	1	4	0	0	0	1	0	0	0	1	13	1
7:05 AM	0	5	1	0	0	0	0	8	0	1	1	1	0	1	0	1	17	2
7:10 AM	0	6	1	0	0	0	0	12	0	0	0	1	4	0	0	6	20	10
7:15 AM	0	1	0	0	0	0	1	4	0	2	0	0	0	5	0	0	8	5
7:20 AM	0	5	0	0	0	0	0	10	0	2	1	0	0	0	0	1	18	1
7:25 AM	0	4	1	0	0	0	0	10	0	0	1	1	0	0	0	1	17	1
7:30 AM	0	7	0	0	0	0	0	3	0	1	1	1	1	1	0	1	13	3
7:35 AM	0	6	0	0	0	0	2	16	0	2	0	0	0	2	0	2	26	4
7:40 AM	0	7	1	0	0	0	0	13	0	1	3	2	0	3	0	0	27	3
7:45 AM	0	7	0	0	0	0	1	13	0	3	0	0	0	0	0	0	24	0
7:50 AM	0	7	1	0	0	0	0	26	0	1	2	0	0	2	0	1	37	3
7:55 AM	0	8	1	0	0	0	0	19	0	0	0	4	1	7	0	1	32	9
8:00 AM	0	7	0	0	0	0	0	18	0	4	1	0	1	0	0	0	30	1
8:05 AM	0	13	1	0	0	0	0	22	0	1	2	1	0	2	2	0	40	4
8:10 AM	0	3	0	0	0	0	0	13	0	1	0	0	1	0	1	2	17	4
8:15 AM	0	10	4	0	0	0	1	18	0	3	1	0	1	4	1	1	37	7
8:20 AM	0	9	0	0	0	0	0	14	0	1	2	0	0	1	1	3	26	5
8:25 AM	0	9	1	0	0	0	2	17	0	1	0	1	0	2	1	2	31	5
8:30 AM	0	9	2	0	0	0	2	20	0	1	3	1	0	1	0	1	38	2
8:35 AM	0	3	0	0	0	0	0	9	0	0	0	2	0	2	2	6	14	10
8:40 AM	0	8	0	0	0	0	0	10	0	2	3	1	1	0	0	0	24	1
8:45 AM	0	15	1	0	0	0	0	15	0	4	0	2	0	0	0	3	37	3
8:50 AM	0	5	1	0	0	0	0	16	0	0	1	0	1	6	0	3	23	10
8:55 AM	0	17	3	0	0	0	0	8	0	0	2	1	0	3	0	2	31	5

HOURLY TOTALS	Southbound			Westbound			Northbound			Eastbound			Pedestrians By Approach				TOTAL	
	Right	Thru	Left	Right	Thru	Left	Right	Thru	Left	Right	Thru	Left	West	East	North	South	Veh	Peds
7:00 AM	0	70	6	0	0	0	5	138	0	13	9	11	6	21	0	15	252	42
7:15 AM	0	75	5	0	0	0	4	167	0	18	11	9	4	22	3	9	289	38
7:30 AM	0	93	9	0	0	0	6	192	0	19	12	9	5	24	6	13	340	48
7:45 AM	0	93	10	0	0	0	6	199	0	18	14	10	5	21	8	17	350	51
8:00 AM	0	108	13	0	0	0	5	180	0	18	15	9	5	21	8	23	348	57

Version 3.1

INTERSECTION:	*Whitehead St--/Olivia St--*	**START TIME:**	*4:00 AM*
PROJECT ID#:		**END TIME:**	*6:00 AM*
QC JOB #:	*10134219*	**DATE:**	*12/20/2005*

QUALITY COUNTS
16285 SW 85th Avenue, Ste. 105
Tigard, OR 97224
Phone: 503-620-4242
Fax: 503 620-4545
email: jrw@qualitycounts.net
www.qualitycounts.net

PEAK HOUR TURNING MOVEMENTS

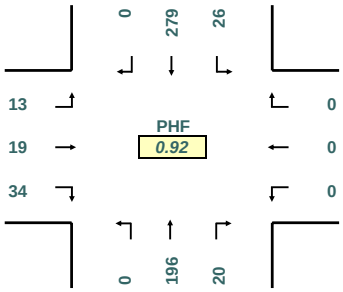

PEAK HOUR LINK VOLUMES

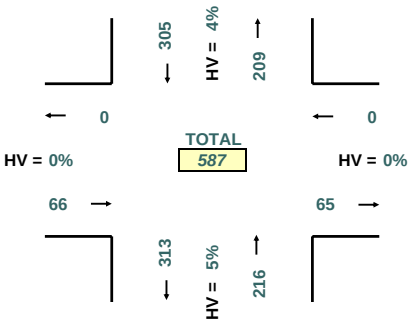

PEAK HOUR PED CROSSING VOLUMES

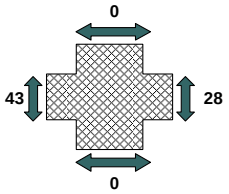

PEAK HOUR: 4:30 AM TO 5:30 AM

PEAK 15 MINUTES: 5:00 AM TO 5:15 AM

5-MINUTE COUNT PERIOD BEGINNING AT	*Whitehead St--* (Southbound)			*Olivia St--* (Westbound)			*Whitehead St--* (Northbound)			*Olivia St--* (Eastbound)			Crosswalk Usage (Peds By Approach)				TOTAL	
	Right	Thru	Left	Right	Thru	Left	Right	Thru	Left	Right	Thru	Left	North	East	South	West	Veh	Peds
4:00 AM	0	17	3	0	0	0	1	19	0	1	1	4	0	16	0	0	46	16
4:05 AM	0	19	2	0	0	0	0	15	0	1	1	0	0	16	0	2	38	18
4:10 AM	0	16	2	0	0	0	1	20	0	4	3	0	0	1	0	0	46	1
4:15 AM	0	20	1	0	0	0	1	8	0	5	2	1	0	9	0	0	38	9
4:20 AM	0	16	3	0	0	0	2	10	0	2	2	2	0	2	0	1	37	3
4:25 AM	0	23	0	0	0	0	2	10	0	4	4	1	0	4	0	3	44	7
4:30 AM	0	27	2	0	0	0	0	15	0	2	1	0	0	5	0	6	47	11
4:35 AM	0	20	1	0	0	0	2	23	0	3	1	1	0	3	0	6	51	9
4:40 AM	0	26	3	0	0	0	3	13	0	4	4	2	0	8	0	1	55	9
4:45 AM	0	20	2	0	0	0	2	17	0	3	3	1	0	0	0	8	48	8
4:50 AM	0	23	3	0	0	0	0	15	0	5	1	1	0	5	0	2	48	7
4:55 AM	0	28	1	0	0	0	2	18	0	3	1	2	0	0	0	2	55	2
5:00 AM	0	28	2	0	0	0	3	24	0	2	3	0	0	3	0	0	62	3
5:05 AM	0	16	4	0	0	0	3	21	0	3	2	1	0	2	0	5	50	7
5:10 AM	0	28	0	0	0	0	0	12	0	3	2	3	0	0	0	3	48	3
5:15 AM	0	19	6	0	0	0	1	12	0	0	0	1	0	0	0	1	39	1
5:20 AM	0	22	2	0	0	0	4	15	0	2	1	0	0	0	0	3	46	3
5:25 AM	0	22	0	0	0	0	0	11	0	4	0	1	0	2	0	6	38	8
5:30 AM	0	11	1	0	0	0	1	17	0	1	0	3	0	1	0	0	34	1
5:35 AM	0	9	1	0	0	0	0	10	0	0	1	1	0	0	0	1	22	1
5:40 AM	0	15	1	0	0	0	2	11	0	3	3	0	0	3	0	0	35	3
5:45 AM	0	15	0	0	0	0	3	13	0	1	0	0	0	0	0	1	32	1
5:50 AM	0	16	0	0	0	0	1	12	0	1	3	0	0	0	0	0	33	0
5:55 AM	0	9	2	0	0	0	0	13	0	1	2	1	0	3	0	0	28	3

HOURLY TOTALS	Southbound			Westbound			Northbound			Eastbound			Pedestrians By Approach				TOTAL	
	Right	Thru	Left	Right	Thru	Left	Right	Thru	Left	Right	Thru	Left	West	East	North	South	Veh	Peds
4:00 AM	0	255	23	0	0	0	16	183	0	37	24	15	0	69	0	31	553	100
4:15 AM	0	275	22	0	0	0	20	186	0	39	26	15	0	41	0	37	583	78
4:30 AM	0	279	26	0	0	0	20	196	0	34	19	13	0	28	0	43	587	71
4:45 AM	0	241	23	0	0	0	18	183	0	29	17	14	0	16	0	31	525	47
5:00 AM	0	210	19	0	0	0	18	171	0	21	17	11	0	14	0	20	467	34

Version 3.1

INTERSECTION:	*Whitehead St--/Petronia St--*	**START TIME:**	*7:00 AM*
PROJECT ID#:		**END TIME:**	*9:00 AM*
QC JOB #:	*10134204*	**DATE:**	*12/20/2005*

QUALITY COUNTS
16285 SW 85th Avenue, Ste. 105
Tigard, OR 97224
Phone: 503-620-4242
Fax: 503 620-4545
email: jrw@qualitycounts.net
www.qualitycounts.net

PEAK HOUR TURNING MOVEMENTS

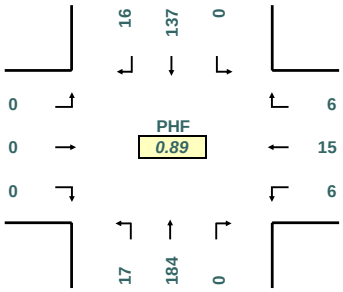

PEAK HOUR LINK VOLUMES

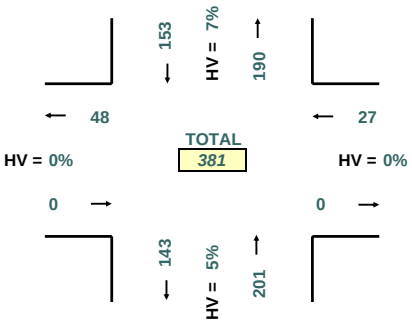

PEAK HOUR PED CROSSING VOLUMES

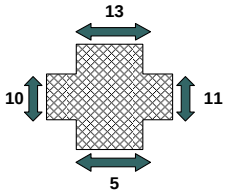

PEAK HOUR: 8:00 AM TO 9:00 AM

PEAK 15 MINUTES: 8:15 AM TO 8:30 AM

5-MINUTE COUNT PERIOD BEGINNING AT	*Whitehead St--* (Southbound)			*Petronia St--* (Westbound)			*Whitehead St--* (Northbound)			*Petronia St--* (Eastbound)			Crosswalk Usage (Peds By Approach)				TOTAL	
	Right	Thru	Left	Right	Thru	Left	Right	Thru	Left	Right	Thru	Left	North	East	South	West	Veh	Peds
7:00 AM	1	8	0	0	0	0	0	3	0	0	0	0	0	1	0	0	12	1
7:05 AM	0	5	0	0	0	0	0	6	1	0	0	0	3	3	0	0	12	6
7:10 AM	0	6	0	0	1	0	0	13	0	0	0	0	0	0	0	0	20	0
7:15 AM	0	3	0	0	0	0	0	3	2	0	0	0	0	0	0	0	8	0
7:20 AM	0	3	0	0	0	0	0	5	1	0	0	0	3	0	0	2	9	5
7:25 AM	0	5	0	0	2	1	0	10	3	0	0	0	2	1	0	0	21	3
7:30 AM	0	6	0	1	0	1	0	16	0	0	0	0	0	0	0	1	24	1
7:35 AM	0	5	0	0	0	0	0	11	0	0	0	0	2	2	0	1	16	5
7:40 AM	1	7	0	0	1	0	0	16	0	0	0	0	1	0	0	1	25	2
7:45 AM	1	8	0	0	0	0	0	13	0	0	0	0	1	3	0	1	22	5
7:50 AM	0	6	0	2	1	1	0	17	0	0	0	0	0	3	0	2	27	5
7:55 AM	1	6	0	0	0	0	0	27	3	0	0	0	0	5	0	2	37	7
8:00 AM	1	9	0	0	0	0	0	19	1	0	0	0	1	2	1	0	30	4
8:05 AM	4	2	0	1	1	1	0	20	1	0	0	0	1	1	1	1	30	4
8:10 AM	2	15	0	0	2	1	0	11	0	0	0	0	0	0	0	0	31	0
8:15 AM	0	11	0	1	2	0	0	30	2	0	0	0	0	1	0	1	46	2
8:20 AM	2	8	0	0	3	0	0	7	1	0	0	0	0	0	0	1	21	1
8:25 AM	0	18	0	0	0	2	0	17	3	0	0	0	0	3	0	2	40	5
8:30 AM	1	11	0	0	1	1	0	13	3	0	0	0	4	1	0	2	30	7
8:35 AM	0	9	0	0	4	0	0	20	0	0	0	0	2	1	0	2	33	5
8:40 AM	3	10	0	0	2	1	0	12	0	0	0	0	1	0	0	0	28	1
8:45 AM	1	18	0	1	0	0	0	13	3	0	0	0	3	1	3	1	36	8
8:50 AM	1	9	0	0	0	0	0	15	1	0	0	0	1	1	0	0	26	2
8:55 AM	1	17	0	3	0	0	0	7	2	0	0	0	0	0	0	0	30	0

HOURLY TOTALS	Southbound			Westbound			Northbound			Eastbound			Pedestrians By Approach				TOTAL	
	Right	Thru	Left	Right	Thru	Left	Right	Thru	Left	Right	Thru	Left	West	East	North	South	Veh	Peds
7:00 AM	4	68	0	3	5	3	0	140	10	0	0	0	12	18	0	10	233	40
7:15 AM	10	75	0	4	7	5	0	168	11	0	0	0	11	17	2	11	280	41
7:30 AM	12	101	0	5	10	6	0	204	11	0	0	0	6	20	2	13	349	41
7:45 AM	15	113	0	4	16	7	0	206	14	0	0	0	10	20	2	14	375	46
8:00 AM	16	137	0	6	15	6	0	184	17	0	0	0	13	11	5	10	381	39

Version 3.1

INTERSECTION:	*Whitehead St--/Petronia St--*	**START TIME:**	*4:00 PM*
PROJECT ID#:		**END TIME:**	*6:00 PM*
QC JOB #:	*10134218*	**DATE:**	*12/21/2005*

QUALITY COUNTS
16285 SW 85th Avenue, Ste. 105
Tigard, OR 97224
Phone: 503-620-4242
Fax: 503 620-4545
email: jrw@qualitycounts.net
www.qualitycounts.net

PEAK HOUR TURNING MOVEMENTS

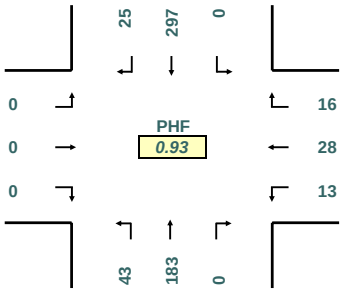

PEAK HOUR LINK VOLUMES

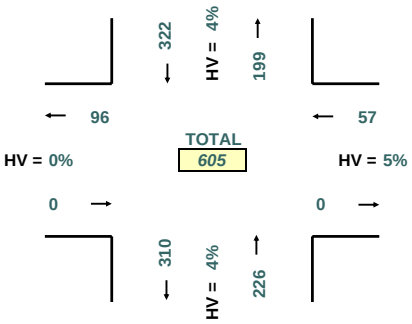

PEAK HOUR PED CROSSING VOLUMES

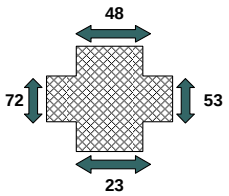

PEAK HOUR: 4:30 PM TO 5:30 PM

PEAK 15 MINUTES: 4:30 PM TO 4:45 PM

5-MINUTE COUNT PERIOD BEGINNING AT	*Whitehead St--* (Southbound)			*Petronia St--* (Westbound)			*Whitehead St--* (Northbound)			*Petronia St--* (Eastbound)			Crosswalk Usage (Peds By Approach)				TOTAL	
	Right	Thru	Left	Right	Thru	Left	Right	Thru	Left	Right	Thru	Left	North	East	South	West	Veh	Peds
4:00 PM	3	15	0	0	0	0	0	21	4	0	0	0	2	10	5	8	43	25
4:05 PM	0	23	0	1	4	0	0	16	1	0	0	0	5	6	1	2	45	14
4:10 PM	1	20	0	1	2	0	0	18	3	0	0	0	6	5	0	6	45	17
4:15 PM	1	30	0	1	0	0	0	8	5	0	0	0	2	8	0	0	45	10
4:20 PM	2	17	0	2	2	0	0	11	0	0	0	0	2	4	0	6	34	12
4:25 PM	2	23	0	0	2	0	0	13	0	0	0	0	2	7	4	12	40	25
4:30 PM	2	30	0	0	5	0	0	14	2	0	0	0	7	1	5	8	53	21
4:35 PM	2	19	0	1	2	1	0	19	7	0	0	0	6	11	0	1	51	18
4:40 PM	1	28	0	4	5	2	0	16	3	0	0	0	8	3	0	8	59	19
4:45 PM	3	20	0	2	2	0	0	18	1	0	0	0	1	4	0	5	46	10
4:50 PM	1	26	0	2	1	0	0	13	3	0	0	0	1	14	1	2	46	18
4:55 PM	2	31	0	1	3	2	0	20	2	0	0	0	3	6	3	8	61	20
5:00 PM	1	31	0	0	3	3	0	18	6	0	0	0	5	4	5	4	62	18
5:05 PM	6	17	0	0	1	1	0	18	7	0	0	0	2	3	1	11	50	17
5:10 PM	2	26	0	2	2	0	0	14	4	0	0	0	0	4	4	7	50	15
5:15 PM	1	23	0	2	1	3	0	7	4	0	0	0	5	0	1	4	41	10
5:20 PM	4	24	0	1	1	0	0	15	1	0	0	0	8	1	1	10	46	20
5:25 PM	0	22	0	1	2	1	0	11	3	0	0	0	2	2	2	4	40	10
5:30 PM	3	14	0	1	3	0	0	18	1	0	0	0	4	0	0	3	40	7
5:35 PM	2	7	0	0	1	0	0	14	1	0	0	0	1	4	0	2	25	7
5:40 PM	0	14	0	0	3	2	0	7	0	0	0	0	0	1	4	8	26	13
5:45 PM	0	14	0	1	1	0	0	15	2	0	0	0	2	3	0	6	33	11
5:50 PM	0	14	0	2	5	0	0	12	3	0	0	0	0	2	1	0	36	3
5:55 PM	0	10	0	0	1	0	0	9	5	0	0	0	1	5	0	0	25	6

HOURLY TOTALS	Southbound			Westbound			Northbound			Eastbound			Pedestrians By Approach				TOTAL	
	Right	Thru	Left	Right	Thru	Left	Right	Thru	Left	Right	Thru	Left	West	East	North	South	Veh	Peds
4:00 PM	20	282	0	15	28	5	0	187	31	0	0	0	45	79	19	66	568	209
4:15 PM	25	298	0	15	28	9	0	182	40	0	0	0	39	69	23	72	597	203
4:30 PM	25	297	0	16	28	13	0	183	43	0	0	0	48	53	23	72	605	196
4:45 PM	25	255	0	12	23	12	0	173	33	0	0	0	32	43	22	68	533	165
5:00 PM	19	216	0	10	24	10	0	158	37	0	0	0	30	29	19	59	474	137

Version 3.1

INTERSECTION:	*Whitehead St--/Southard St--*	**START TIME:**	*7:00 AM*
PROJECT ID#:		**END TIME:**	*9:00 AM*
QC JOB #:	*10134201*	**DATE:**	*12/20/2005*

QUALITY COUNTS
16285 SW 85th Avenue, Ste. 105
Tigard, OR 97224
Phone: 503-620-4242
Fax: 503 620-4545
email: jrw@qualitycounts.net
www.qualitycounts.net

PEAK HOUR TURNING MOVEMENTS

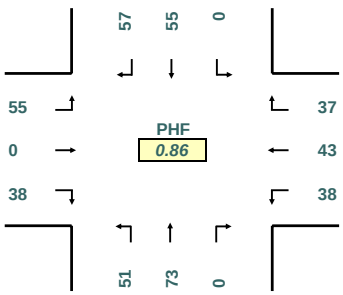

PEAK HOUR LINK VOLUMES

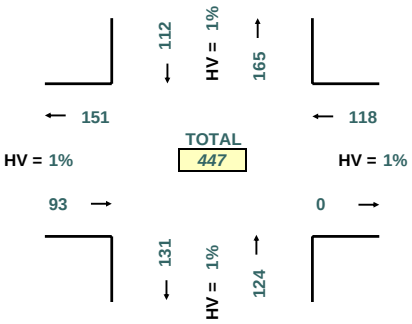

PEAK HOUR PED CROSSING VOLUMES

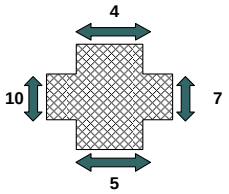

PEAK HOUR: 8:00 AM TO 9:00 AM

PEAK 15 MINUTES: 8:45 AM TO 9:00 AM

5-MINUTE COUNT PERIOD BEGINNING AT	*Whitehead St--* (Southbound)			*Southard St--* (Westbound)			*Whitehead St--* (Northbound)			*Southard St--* (Eastbound)			Crosswalk Usage (Peds By Approach)				TOTAL	
	Right	Thru	Left	Right	Thru	Left	Right	Thru	Left	Right	Thru	Left	North	East	South	West	Veh	Peds
7:00 AM	6	2	0	1	6	0	0	2	1	1	0	5	0	1	0	0	24	1
7:05 AM	1	4	0	1	1	3	0	0	1	0	0	5	0	1	0	0	16	1
7:10 AM	4	3	0	3	4	2	0	8	4	4	0	5	0	1	1	1	37	3
7:15 AM	5	1	0	0	7	0	0	5	5	2	0	3	0	1	0	1	28	2
7:20 AM	3	2	0	1	5	2	0	6	3	3	0	2	0	1	0	1	27	2
7:25 AM	6	5	0	0	2	1	0	5	3	3	0	3	1	1	0	1	28	3
7:30 AM	4	3	0	0	6	2	0	4	4	2	0	5	0	1	1	1	30	3
7:35 AM	10	1	0	0	10	1	0	9	5	1	0	3	0	1	1	1	40	3
7:40 AM	10	7	0	4	4	1	0	5	3	3	0	3	0	0	0	0	40	0
7:45 AM	3	4	0	1	8	0	0	12	9	3	0	4	0	0	1	1	44	2
7:50 AM	3	3	0	8	2	0	0	6	6	3	0	3	0	0	0	0	34	0
7:55 AM	3	6	0	7	1	2	0	9	6	2	0	3	1	0	1	1	39	3
8:00 AM	6	3	0	1	6	2	0	7	6	1	0	5	0	1	0	0	37	1
8:05 AM	6	4	0	3	5	3	0	6	5	2	0	6	1	1	0	1	40	3
8:10 AM	4	5	0	3	4	4	0	3	4	4	0	7	1	0	1	2	38	4
8:15 AM	7	7	0	2	2	6	0	5	3	5	0	7	1	1	1	1	44	4
8:20 AM	4	4	0	5	2	2	0	7	2	2	0	3	0	0	0	1	31	1
8:25 AM	3	2	0	2	2	2	0	9	6	1	0	2	0	1	0	1	29	2
8:30 AM	5	3	0	1	1	3	0	7	5	3	0	4	0	1	0	0	32	1
8:35 AM	2	3	0	3	6	1	0	7	3	4	0	6	0	0	1	2	35	3
8:40 AM	3	2	0	4	4	2	0	6	2	3	0	5	0	0	0	1	31	1
8:45 AM	6	7	0	3	3	3	0	4	3	2	0	4	1	1	0	0	35	2
8:50 AM	3	11	0	4	2	4	0	7	5	4	0	3	0	1	0	0	43	1
8:55 AM	8	4	0	6	6	6	0	5	7	7	0	3	0	0	2	1	52	3

HOURLY TOTALS	Southbound			Westbound			Northbound			Eastbound			Pedestrians By Approach				TOTAL	
	Right	Thru	Left	Right	Thru	Left	Right	Thru	Left	Right	Thru	Left	West	East	North	South	Veh	Peds
7:00 AM	58	41	0	26	56	14	0	71	50	27	0	44	2	8	5	8	387	23
7:15 AM	63	44	0	28	60	18	0	77	59	29	0	47	4	7	5	10	425	26
7:30 AM	63	49	0	36	52	25	0	82	59	29	0	51	4	6	6	10	446	26
7:45 AM	49	46	0	40	43	27	0	84	57	33	0	55	4	5	5	11	434	25
8:00 AM	57	55	0	37	43	38	0	73	51	38	0	55	4	7	5	10	447	26

Version 3.1

INTERSECTION:	*Whitehead St--/Southard St--*	**START TIME:**	*4:00 PM*
PROJECT ID#:		**END TIME:**	*6:00 PM*
QC JOB #:	*10134215*	**DATE:**	*12/20/2005*

QUALITY COUNTS
16285 SW 85th Avenue, Ste. 105
Tigard, OR 97224
Phone: 503-620-4242
Fax: 503 620-4545
email: jrw@qualitycounts.net
www.qualitycounts.net

PEAK HOUR TURNING MOVEMENTS

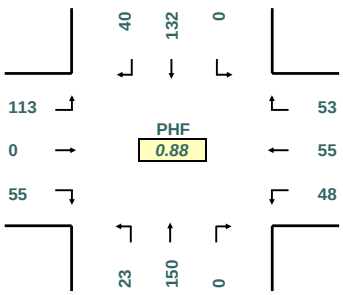

PEAK HOUR LINK VOLUMES

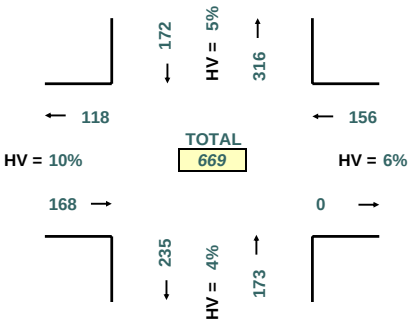

PEAK HOUR PED CROSSING VOLUMES

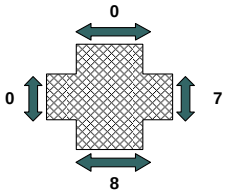

PEAK HOUR: 4:00 PM TO 5:00 PM

PEAK 15 MINUTES: 4:00 PM TO 4:15 PM

5-MINUTE COUNT PERIOD BEGINNING AT	*Whitehead St--* (Southbound)			*Southard St--* (Westbound)			*Whitehead St--* (Northbound)			*Southard St--* (Eastbound)			Crosswalk Usage (Peds By Approach)				TOTAL	
	Right	Thru	Left	Right	Thru	Left	Right	Thru	Left	Right	Thru	Left	North	East	South	West	Veh	Peds
4:00 PM	4	17	0	6	5	7	0	22	1	4	0	11	0	5	1	0	77	6
4:05 PM	0	18	0	7	5	4	0	11	2	2	0	12	0	0	0	0	61	0
4:10 PM	4	10	0	3	4	7	0	13	1	2	0	9	0	0	0	0	53	0
4:15 PM	6	7	0	2	7	2	0	5	2	4	0	11	0	0	0	0	46	0
4:20 PM	4	8	0	4	6	5	0	14	1	8	0	13	0	0	1	0	63	1
4:25 PM	3	12	0	3	8	2	0	12	1	6	0	4	0	0	0	0	51	0
4:30 PM	4	11	0	7	4	2	0	9	2	5	0	15	0	2	6	0	59	8
4:35 PM	2	11	0	5	6	4	0	14	2	3	0	10	0	0	0	0	57	0
4:40 PM	7	14	0	2	0	6	0	8	1	6	0	2	0	0	0	0	46	0
4:45 PM	0	8	0	4	4	0	0	14	5	2	0	9	0	0	0	0	46	0
4:50 PM	0	6	0	5	3	4	0	22	1	2	0	8	0	0	0	0	51	0
4:55 PM	6	10	0	5	3	5	0	6	4	11	0	9	0	0	0	0	59	0
5:00 PM	3	12	0	3	3	2	0	13	1	6	0	9	0	5	0	0	52	5
5:05 PM	6	19	0	3	4	1	0	15	0	8	0	10	0	0	0	0	66	0
5:10 PM	2	15	0	1	4	3	0	5	2	3	0	1	0	7	0	0	36	7
5:15 PM	3	13	0	3	1	1	0	7	2	7	0	7	0	0	0	0	44	0
5:20 PM	5	6	0	4	3	1	0	15	5	7	0	14	0	0	0	0	60	0
5:25 PM	6	7	0	10	6	0	0	14	1	5	0	6	0	0	4	0	55	4
5:30 PM	2	9	0	0	5	5	0	4	0	1	0	5	0	0	1	0	31	1
5:35 PM	1	15	0	3	3	3	0	10	1	5	0	7	0	0	1	0	48	1
5:40 PM	2	9	0	6	3	2	0	9	3	6	0	3	0	3	1	0	43	4
5:45 PM	4	7	0	2	3	2	0	9	4	5	0	10	0	0	4	0	46	4
5:50 PM	3	5	0	1	5	5	0	2	0	8	0	2	0	2	0	0	31	2
5:55 PM	3	7	0	4	3	1	0	8	2	2	0	4	0	0	0	0	34	0

HOURLY TOTALS	Southbound			Westbound			Northbound			Eastbound			Pedestrians By Approach				TOTAL	
	Right	Thru	Left	Right	Thru	Left	Right	Thru	Left	Right	Thru	Left	West	East	North	South	Veh	Peds
4:00 PM	40	132	0	53	55	48	0	150	23	55	0	113	0	7	8	0	669	15
4:15 PM	43	133	0	44	52	36	0	137	22	64	0	101	0	14	7	0	632	21
4:30 PM	44	132	0	52	41	29	0	142	26	65	0	100	0	14	10	0	631	24
4:45 PM	36	129	0	47	42	27	0	134	25	63	0	88	0	15	7	0	591	22
5:00 PM	40	124	0	40	43	26	0	111	21	63	0	78	0	17	11	0	546	28

Version 3.1

INTERSECTION:	*Whitehead--/Truman--*	**START TIME:**	*7:00 AM*
PROJECT ID#:		**END TIME:**	*9:00 AM*
QC JOB #:	*10134206*	**DATE:**	*12/21/2005*

QUALITY COUNTS
16285 SW 85th Avenue, Ste. 105
Tigard, OR 97224
Phone: 503-620-4242
Fax: 503 620-4545
email: jrw@qualitycounts.net
www.qualitycounts.net

PEAK HOUR TURNING MOVEMENTS

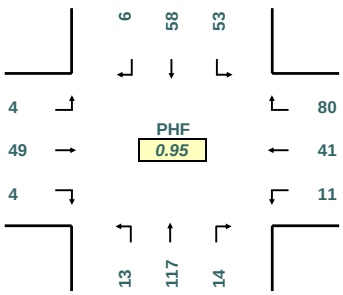

PEAK HOUR LINK VOLUMES

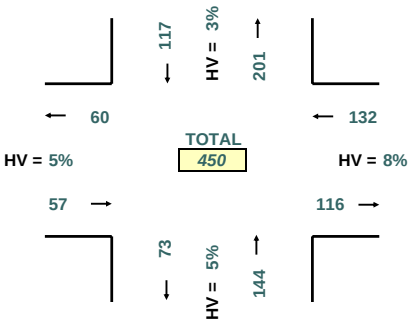

PEAK HOUR PED CROSSING VOLUMES

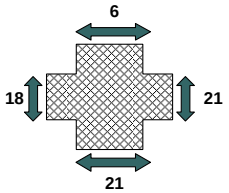

PEAK HOUR: 7:45 AM TO 8:45 AM

PEAK 15 MINUTES: 8:00 AM TO 8:15 AM

5-MINUTE COUNT PERIOD BEGINNING AT	*Whitehead--* (Southbound)			*Truman--* (Westbound)			*Whitehead--* (Northbound)			*Truman--* (Eastbound)			Crosswalk Usage (Peds By Approach)				TOTAL	
	Right	Thru	Left	Right	Thru	Left	Right	Thru	Left	Right	Thru	Left	North	East	South	West	Veh	Peds
7:00 AM	0	1	4	2	1	0	0	2	0	0	4	0	0	0	0	0	14	0
7:05 AM	0	2	2	6	0	0	1	5	0	0	1	0	0	2	0	0	17	2
7:10 AM	3	2	5	2	2	0	0	6	0	0	3	0	0	2	0	0	23	2
7:15 AM	0	1	3	2	2	0	1	3	0	0	3	1	0	3	1	0	16	4
7:20 AM	1	1	2	4	4	0	2	8	0	0	2	0	0	0	0	0	24	0
7:25 AM	0	4	2	5	4	0	2	4	1	0	2	0	0	1	0	0	24	1
7:30 AM	1	1	4	8	2	1	1	7	0	0	2	0	0	0	0	1	27	1
7:35 AM	1	4	3	4	2	0	2	8	2	0	4	0	0	1	1	0	30	2
7:40 AM	0	7	2	5	0	2	3	8	0	0	3	0	1	1	0	2	30	4
7:45 AM	0	8	4	9	3	0	1	7	1	1	4	0	1	4	2	3	38	10
7:50 AM	1	7	1	6	3	1	4	16	1	0	6	1	0	1	0	2	47	3
7:55 AM	1	5	3	3	5	0	1	10	1	0	1	1	0	5	0	1	31	6
8:00 AM	2	3	7	12	1	0	0	11	2	0	3	0	0	0	0	0	41	0
8:05 AM	0	4	1	6	7	1	3	12	1	0	6	0	1	1	1	0	41	3
8:10 AM	1	4	6	8	3	2	0	5	1	0	6	0	0	0	0	1	36	1
8:15 AM	0	3	11	9	3	2	0	8	2	0	4	0	1	1	4	0	42	6
8:20 AM	0	7	4	4	3	0	1	12	1	0	3	0	1	1	6	0	35	8
8:25 AM	1	2	5	7	4	2	0	13	0	1	3	0	0	0	4	2	38	6
8:30 AM	0	9	3	8	3	1	1	13	1	0	2	1	2	1	1	5	42	9
8:35 AM	0	2	1	4	3	0	1	3	1	0	6	0	0	4	2	3	21	9
8:40 AM	0	4	7	4	3	2	2	7	1	2	5	1	0	3	1	1	38	5
8:45 AM	0	12	7	4	1	0	3	10	2	1	2	0	0	5	0	5	42	10
8:50 AM	1	6	6	7	3	1	3	10	1	2	1	1	5	5	1	2	42	13
8:55 AM	2	10	3	2	2	0	3	7	1	1	0	0	1	4	1	0	31	6

HOURLY TOTALS	Southbound			Westbound			Northbound			Eastbound			Pedestrians By Approach				TOTAL	
	Right	Thru	Left	Right	Thru	Left	Right	Thru	Left	Right	Thru	Left	West	East	North	South	Veh	Peds
7:00 AM	8	43	35	56	28	4	18	84	6	1	35	3	2	20	4	9	321	35
7:15 AM	8	49	38	72	36	7	20	99	10	1	42	3	3	17	5	10	385	35
7:30 AM	8	55	51	81	36	11	16	117	12	2	45	2	5	15	18	12	436	50
7:45 AM	6	58	53	80	41	11	14	117	13	4	49	4	6	21	21	18	450	66
8:00 AM	7	66	61	75	36	11	17	111	14	7	41	3	11	25	21	19	449	76

Version 3.1

INTERSECTION:	*Whitehead--/Truman--*	**START TIME:**	*4:00 PM*
PROJECT ID#:		**END TIME:**	*6:00 PM*
QC JOB #:	*10134220*	**DATE:**	*12/20/2005*

QUALITY COUNTS
16285 SW 85th Avenue, Ste. 105
Tigard, OR 97224
Phone: 503-620-4242
Fax: 503 620-4545
email: jrw@qualitycounts.net
www.qualitycounts.net

PEAK HOUR TURNING MOVEMENTS

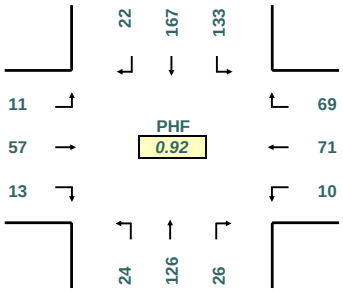

PEAK HOUR LINK VOLUMES

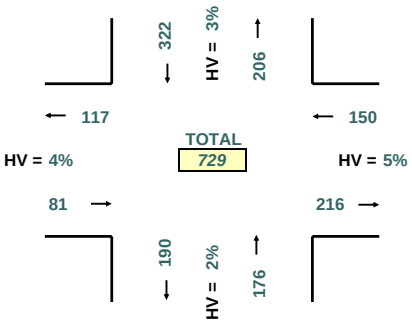

PEAK HOUR PED CROSSING VOLUMES

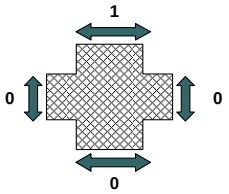

PEAK HOUR: 4:15 PM TO 5:15 PM

PEAK 15 MINUTES: 5:00 PM TO 5:15 PM

5-MINUTE COUNT PERIOD BEGINNING AT	*Whitehead--* (Southbound)			*Truman--* (Westbound)			*Whitehead--* (Northbound)			*Truman--* (Eastbound)			Crosswalk Usage (Peds By Approach)				TOTAL	
	Right	Thru	Left	Right	Thru	Left	Right	Thru	Left	Right	Thru	Left	North	East	South	West	Veh	Peds
4:00 PM	3	12	7	7	7	1	5	9	1	1	2	1	0	0	0	0	56	0
4:05 PM	0	8	10	4	4	3	6	15	1	0	3	0	0	0	0	0	54	0
4:10 PM	0	14	5	8	10	3	4	12	0	0	1	0	0	0	0	0	57	0
4:15 PM	5	14	13	3	5	1	3	10	1	2	4	0	0	0	0	0	61	0
4:20 PM	2	8	12	5	4	1	2	7	1	1	2	0	0	0	0	0	45	0
4:25 PM	1	11	15	4	5	0	2	11	0	0	3	0	0	0	0	0	52	0
4:30 PM	0	19	11	3	11	0	2	11	2	0	4	1	0	0	0	0	64	0
4:35 PM	2	7	8	7	6	1	6	16	2	2	1	3	0	0	0	0	61	0
4:40 PM	2	20	7	4	9	1	1	6	2	1	6	0	0	0	0	0	59	0
4:45 PM	2	12	11	8	4	2	3	12	2	1	10	0	0	0	0	0	67	0
4:50 PM	3	10	14	4	7	2	1	9	3	1	3	0	0	0	0	0	57	0
4:55 PM	2	18	10	9	2	1	3	10	3	0	6	1	0	0	0	0	65	0
5:00 PM	1	19	10	15	9	0	1	14	1	2	5	2	1	0	0	0	79	1
5:05 PM	1	12	13	3	5	0	1	13	1	1	5	1	0	0	0	0	56	0
5:10 PM	1	17	9	4	4	1	1	7	6	2	8	3	0	0	0	0	63	0
5:15 PM	0	6	12	3	5	1	4	9	2	1	0	0	0	0	0	0	43	0
5:20 PM	0	14	13	5	8	4	4	9	0	2	5	0	0	0	0	0	64	0
5:25 PM	3	7	17	4	5	1	0	8	0	0	2	0	0	0	0	0	47	0
5:30 PM	0	6	6	9	5	1	2	9	0	0	2	0	0	0	0	0	40	0
5:35 PM	0	5	4	4	4	1	3	8	1	1	4	0	0	0	0	0	35	0
5:40 PM	0	4	15	5	3	3	2	6	0	0	5	0	0	0	0	0	43	0
5:45 PM	0	8	11	4	3	1	3	10	1	1	5	0	0	0	0	0	47	0
5:50 PM	0	7	7	7	3	3	3	9	1	1	4	0	0	0	0	0	45	0
5:55 PM	0	6	3	5	5	1	0	6	2	0	1	0	0	0	0	0	29	0

HOURLY TOTALS	Southbound			Westbound			Northbound			Eastbound			Pedestrians By Approach				TOTAL	
	Right	Thru	Left	Right	Thru	Left	Right	Thru	Left	Right	Thru	Left	West	East	North	South	Veh	Peds
4:00 PM	22	153	123	66	74	16	38	128	18	9	45	6	0	0	0	0	698	0
4:15 PM	22	167	133	69	71	10	26	126	24	13	57	11	1	0	0	0	729	1
4:30 PM	17	161	135	69	75	14	27	124	24	13	55	11	1	0	0	0	725	1
4:45 PM	13	130	134	73	61	17	25	114	19	11	55	7	1	0	0	0	659	1
5:00 PM	6	111	120	68	59	17	24	108	15	11	46	6	1	0	0	0	591	1

Version 3.1

APPENDIX B
72-Hour Bi-Directional Volume Counts

ATEC
Advanced Transportation
Engineering Consultants

Quality Counts, LLC
16285 SW 85th Ave. Ste. 105
Tigard, Oregon 97227

Site Code: 10134301
Station ID:
Southard BT Whitehead & Thomas
150' E of Thomas
Latitude: 0' 0.000 Undefined

Start Time	19-Dec-05 Mon	EB	WB	Combined Total
12:00 AM		*	*	*
01:00		*	*	*
02:00		*	*	*
03:00		*	*	*
04:00		*	*	*
05:00		*	*	*
06:00		*	*	*
07:00		*	*	*
08:00		*	*	*
09:00		*	*	*
10:00		*	*	*
11:00		*	*	*
12:00 PM		*	*	*
01:00		*	*	*
02:00		*	*	*
03:00		*	*	*
04:00		*	*	*
05:00		*	*	*
06:00		*	*	*
07:00		40	59	99
08:00		32	48	80
09:00		24	39	63
10:00		25	33	58
11:00		13	26	39
Total		134	205	
Percent		39.5%	60.5%	

Quality Counts, LLC
16285 SW 85th Ave. Ste. 105
Tigard, Oregon 97227

Site Code: 10134301
Station ID:
Southard BT Whitehead & Thomas
150' E of Thomas
Latitude: 0' 0.000 Undefined

Start Time	20-Dec-05 Tue	EB	WB	Combined Total
12:00 AM		9	18	27
01:00		7	10	17
02:00		2	8	10
03:00		3	4	7
04:00		4	4	8
05:00		9	15	24
06:00		43	91	134
07:00		66	175	241
08:00		86	199	285
09:00		121	146	267
10:00		136	141	277
11:00		177	146	323
12:00 PM		152	164	316
01:00		133	190	323
02:00		162	145	307
03:00		166	150	316
04:00		154	102	256
05:00		162	97	259
06:00		75	91	166
07:00		55	60	115
08:00		34	59	93
09:00		25	52	77
10:00		26	30	56
11:00		6	17	23
Total		1813	2114	
Percent		46.2%	53.8%	

Quality Counts, LLC
16285 SW 85th Ave. Ste. 105
Tigard, Oregon 97227

Site Code: 10134301
Station ID:
Southard BT Whitehead & Thomas
150' E of Thomas
Latitude: 0' 0.000 Undefined

Start Time	21-Dec-05 Wed	EB	WB	Combined Total
12:00 AM		5	11	16
01:00		4	9	13
02:00		1	1	2
03:00		4	5	9
04:00		9	6	15
05:00		11	13	24
06:00		36	89	125
07:00		56	175	231
08:00		101	169	270
09:00		98	125	223
10:00		146	117	263
11:00		148	140	288
12:00 PM		152	180	332
01:00		134	165	299
02:00		141	146	287
03:00		163	128	291
04:00		152	120	272
05:00		161	138	299
06:00		81	77	158
07:00		58	52	110
08:00		30	56	86
09:00		20	60	80
10:00		26	22	48
11:00		14	20	34
Total		1751	2024	
Percent		46.4%	53.6%	

Quality Counts, LLC
16285 SW 85th Ave. Ste. 105
Tigard, Oregon 97227

Site Code: 10134301
Station ID:
Southard BT Whitehead & Thomas
150' E of Thomas
Latitude: 0' 0.000 Undefined

Start Time	22-Dec-05 Thu	EB	WB	Combined Total
12:00 AM		3	14	17
01:00		0	7	7
02:00		3	8	11
03:00		4	3	7
04:00		6	8	14
05:00		5	12	17
06:00		47	89	136
07:00		64	118	182
08:00		79	124	203
09:00		87	107	194
10:00		120	157	277
11:00		139	129	268
12:00 PM		172	164	336
01:00		141	179	320
02:00		164	163	327
03:00		165	150	315
04:00		178	139	317
05:00		170	102	272
06:00		86	83	169
07:00		*	*	*
08:00		*	*	*
09:00		*	*	*
10:00		*	*	*
11:00		*	*	*
Total		1633	1756	
Percent		48.2%	51.8%	
Grand Total		5331	6099	
Percentage		46.6%	53.4%	
ADT		ADT 3,810		AADT 3,810

Quality Counts, LLC
16285 SW 85th Ave. Ste. 105
Tigard, Oregon 97227

Site Code: 10134302
Station ID:
On Whitehead BT Southerd & Anglea
75' S of Southerd
Latitude: 0' 0.000 Undefined

Start Time	19-Dec-05 Mon	NB	SB	Combined Total
12:00 AM		*	*	*
01:00		*	*	*
02:00		*	*	*
03:00		*	*	*
04:00		*	*	*
05:00		*	*	*
06:00		*	*	*
07:00		*	*	*
08:00		*	*	*
09:00		*	*	*
10:00		*	*	*
11:00		*	*	*
12:00 PM		*	*	*
01:00		*	*	*
02:00		*	*	*
03:00		*	*	*
04:00		*	*	*
05:00		*	*	*
06:00		*	*	*
07:00		*	*	*
08:00		*	*	*
09:00		59	64	123
10:00		70	75	145
11:00		24	44	68
Total		153	183	
Percent		45.5%	54.5%	

Quality Counts, LLC
16285 SW 85th Ave. Ste. 105
Tigard, Oregon 97227

Site Code: 10134302
Station ID:
On Whitehead BT Southerd & Anglea
75' S of Southerd
Latitude: 0' 0.000 Undefined

Start Time	20-Dec-05 Tue	NB	SB	Combined Total
12:00 AM		13	36	49
01:00		10	33	43
02:00		12	20	32
03:00		6	17	23
04:00		8	17	25
05:00		11	14	25
06:00		62	25	87
07:00		135	77	212
08:00		217	120	337
09:00		196	156	352
10:00		218	213	431
11:00		249	221	470
12:00 PM		279	245	524
01:00		259	246	505
02:00		230	255	485
03:00		204	278	482
04:00		208	233	441
05:00		161	235	396
06:00		105	134	239
07:00		92	118	210
08:00		74	90	164
09:00		71	92	163
10:00		26	65	91
11:00		43	51	94
Total		2889	2991	
Percent		49.1%	50.9%	

Quality Counts, LLC
16285 SW 85th Ave. Ste. 105
Tigard, Oregon 97227

Site Code: 10134302
Station ID:
On Whitehead BT Southerd & Anglea
75' S of Southerd
Latitude: 0' 0.000 Undefined

Start Time	21-Dec-05 Wed	NB	SB	Combined Total
12:00 AM		20	30	50
01:00		15	30	45
02:00		6	28	34
03:00		12	21	33
04:00		10	20	30
05:00		13	8	21
06:00		67	28	95
07:00		126	62	188
08:00		208	113	321
09:00		165	165	330
10:00		192	210	402
11:00		260	217	477
12:00 PM		215	258	473
01:00		242	238	480
02:00		215	255	470
03:00		220	246	466
04:00		191	289	480
05:00		176	235	411
06:00		108	145	253
07:00		90	99	189
08:00		75	101	176
09:00		71	91	162
10:00		39	72	111
11:00		31	61	92
Total		2767	3022	
Percent		47.8%	52.2%	

Quality Counts, LLC
16285 SW 85th Ave. Ste. 105
Tigard, Oregon 97227

Site Code: 10134302
Station ID:
On Whitehead BT Southerd & Anglea
75' S of Southerd
Latitude: 0' 0.000 Undefined

Start Time	22-Dec-05 Thu	NB	SB	Combined Total
12:00 AM		26	48	74
01:00		21	46	67
02:00		12	22	34
03:00		11	29	40
04:00		6	15	21
05:00		17	16	33
06:00		61	32	93
07:00		118	52	170
08:00		169	107	276
09:00		171	150	321
10:00		234	196	430
11:00		225	218	443
12:00 PM		233	234	467
01:00		225	225	450
02:00		216	230	446
03:00		218	276	494
04:00		226	229	455
05:00		173	274	447
06:00		119	150	269
07:00		90	115	205
08:00		71	87	158
09:00		*	*	*
10:00		*	*	*
11:00		*	*	*
Total		2642	2751	
Percent		49.0%	51.0%	
Grand Total		8451	8947	
Percentage		48.6%	51.4%	
ADT		ADT 5,799		AADT 5,799

Quality Counts, LLC
16285 SW 85th Ave. Ste. 105
Tigard, Oregon 97227

Site Code: 10134303
Station ID:
On Whitehead BT Angela & Petronia

Latitude: 0' 0.000 Undefined

Start Time	19-Dec-05 Mon	NB	SB	Combined Total
12:00 AM		*	*	*
01:00		*	*	*
02:00		*	*	*
03:00		*	*	*
04:00		*	*	*
05:00		*	*	*
06:00		*	*	*
07:00		*	*	*
08:00		*	*	*
09:00		*	*	*
10:00		*	*	*
11:00		*	*	*
12:00 PM		*	*	*
01:00		*	*	*
02:00		*	*	*
03:00		*	*	*
04:00		*	*	*
05:00		*	*	*
06:00		*	*	*
07:00		*	*	*
08:00		33	33	66
09:00		53	85	138
10:00		56	122	178
11:00		26	72	98
Total		168	312	
Percent		35.0%	65.0%	

Quality Counts, LLC
16285 SW 85th Ave. Ste. 105
Tigard, Oregon 97227

Site Code: 10134303
Station ID:
On Whitehead BT Angela & Petronia

Latitude: 0' 0.000 Undefined

Start Time	20-Dec-05 Tue	NB	SB	Combined Total
12:00 AM		17	46	63
01:00		13	36	49
02:00		15	33	48
03:00		9	20	29
04:00		9	27	36
05:00		16	26	42
06:00		57	54	111
07:00		139	111	250
08:00		207	154	361
09:00		194	219	413
10:00		212	245	457
11:00		217	285	502
12:00 PM		267	295	562
01:00		261	293	554
02:00		221	296	517
03:00		218	322	540
04:00		217	271	488
05:00		160	307	467
06:00		124	195	319
07:00		97	159	256
08:00		66	122	188
09:00		68	122	190
10:00		44	96	140
11:00		46	60	106
Total		2894	3794	
Percent		43.3%	56.7%	

Quality Counts, LLC
16285 SW 85th Ave. Ste. 105
Tigard, Oregon 97227

Site Code: 10134303
Station ID:
On Whitehead BT Angela & Petronia

Latitude: 0' 0.000 Undefined

Start Time	21-Dec-05 Wed	NB	SB	Combined Total
12:00 AM		18	35	53
01:00		22	54	76
02:00		8	33	41
03:00		10	18	28
04:00		7	26	33
05:00		11	19	30
06:00		65	45	110
07:00		142	96	238
08:00		213	167	380
09:00		165	226	391
10:00		202	223	425
11:00		240	251	491
12:00 PM		230	274	504
01:00		259	273	532
02:00		235	271	506
03:00		233	322	555
04:00		212	355	567
05:00		196	305	501
06:00		114	211	325
07:00		87	132	219
08:00		91	121	212
09:00		77	128	205
10:00		52	90	142
11:00		40	90	130
Total		2929	3765	
Percent		43.8%	56.2%	

Quality Counts, LLC
16285 SW 85th Ave. Ste. 105
Tigard, Oregon 97227

Site Code: 10134303
Station ID:
On Whitehead BT Angela & Petronia

Latitude: 0' 0.000 Undefined

Start Time	22-Dec-05 Thu	NB	SB	Combined Total
12:00 AM		30	82	112
01:00		21	66	87
02:00		13	25	38
03:00		9	45	54
04:00		5	20	25
05:00		17	22	39
06:00		58	62	120
07:00		105	88	193
08:00		173	138	311
09:00		176	202	378
10:00		235	236	471
11:00		207	244	451
12:00 PM		214	282	496
01:00		225	275	500
02:00		214	289	503
03:00		230	326	556
04:00		243	300	543
05:00		202	340	542
06:00		123	204	327
07:00		88	162	250
08:00		*	*	*
09:00		*	*	*
10:00		*	*	*
11:00		*	*	*
Total		2588	3408	
Percent		43.2%	56.8%	
Grand Total		8579	11279	
Percentage		43.2%	56.8%	
ADT		ADT 6,619		AADT 6,619

Quality Counts, LLC
16285 SW 85th Ave. Ste. 105
Tigard, Oregon 97227

Site Code: 10134304
Station ID:
Whitehead BT Petronia & Olivia

Latitude: 0' 0.000 Undefined

Start Time	19-Dec-05 Mon	NB	SB	Combined Total
12:00 AM		*	*	*
01:00		*	*	*
02:00		*	*	*
03:00		*	*	*
04:00		*	*	*
05:00		*	*	*
06:00		*	*	*
07:00		*	*	*
08:00		*	*	*
09:00		*	*	*
10:00		*	*	*
11:00		*	*	*
12:00 PM		*	*	*
01:00		*	*	*
02:00		*	*	*
03:00		*	*	*
04:00		*	*	*
05:00		*	*	*
06:00		*	*	*
07:00		*	*	*
08:00		55	42	97
09:00		65	64	129
10:00		69	96	165
11:00		35	54	89
Total		224	256	
Percent		46.7%	53.3%	

Quality Counts, LLC
16285 SW 85th Ave. Ste. 105
Tigard, Oregon 97227

Site Code: 10134304
Station ID:
Whitehead BT Petronia & Olivia

Latitude: 0' 0.000 Undefined

Start Time	20-Dec-05 Tue	NB	SB	Combined Total
12:00 AM		20	33	53
01:00		18	33	51
02:00		17	20	37
03:00		9	18	27
04:00		10	20	30
05:00		16	17	33
06:00		68	50	118
07:00		144	86	230
08:00		229	120	349
09:00		211	174	385
10:00		224	218	442
11:00		231	229	460
12:00 PM		286	237	523
01:00		269	248	517
02:00		219	245	464
03:00		222	273	495
04:00		217	220	437
05:00		173	270	443
06:00		130	155	285
07:00		114	131	245
08:00		71	87	158
09:00		86	89	175
10:00		44	71	115
11:00		48	50	98
Total		3076	3094	
Percent		49.9%	50.1%	

Quality Counts, LLC
16285 SW 85th Ave. Ste. 105
Tigard, Oregon 97227

Site Code: 10134304
Station ID:
Whitehead BT Petronia & Olivia

Latitude: 0' 0.000 Undefined

Start Time	21-Dec-05 Wed	NB	SB	Combined Total
12:00 AM		17	27	44
01:00		18	31	49
02:00		13	25	38
03:00		13	16	29
04:00		10	21	31
05:00		12	16	28
06:00		76	38	114
07:00		143	75	218
08:00		242	125	367
09:00		170	168	338
10:00		208	188	396
11:00		241	231	472
12:00 PM		244	239	483
01:00		256	240	496
02:00		210	251	461
03:00		231	251	482
04:00		219	269	488
05:00		202	260	462
06:00		127	175	302
07:00		102	109	211
08:00		96	101	197
09:00		79	101	180
10:00		47	76	123
11:00		45	53	98
Total		3021	3086	
Percent		49.5%	50.5%	

Quality Counts, LLC
16285 SW 85th Ave. Ste. 105
Tigard, Oregon 97227

Site Code: 10134304
Station ID:
Whitehead BT Petronia & Olivia

Latitude: 0' 0.000 Undefined

Start Time	22-Dec-05 Thu	NB	SB	Combined Total
12:00 AM		31	52	83
01:00		25	48	73
02:00		7	22	29
03:00		16	27	43
04:00		4	13	17
05:00		18	20	38
06:00		64	45	109
07:00		120	61	181
08:00		189	100	289
09:00		195	154	349
10:00		225	169	394
11:00		223	201	424
12:00 PM		210	235	445
01:00		222	240	462
02:00		230	223	453
03:00		221	272	493
04:00		238	249	487
05:00		205	277	482
06:00		138	156	294
07:00		100	118	218
08:00		*	*	*
09:00		*	*	*
10:00		*	*	*
11:00		*	*	*
Total		2681	2682	
Percent		50.0%	50.0%	
Grand Total		9002	9118	
Percentage		49.7%	50.3%	
ADT		ADT 6,040		AADT 6,040

Quality Counts, LLC
16285 SW 85th Ave. Ste. 105
Tigard, Oregon 97227

Site Code: 10134305
Station ID:
On Whitehead BT Olivia & Truman
75' S of Olivia
Latitude: 0' 0.000 Undefined

Start Time	19-Dec-05 Mon	NB	SB	Combined Total
12:00 AM		*	*	*
01:00		*	*	*
02:00		*	*	*
03:00		*	*	*
04:00		*	*	*
05:00		*	*	*
06:00		*	*	*
07:00		*	*	*
08:00		*	*	*
09:00		*	*	*
10:00		*	*	*
11:00		*	*	*
12:00 PM		*	*	*
01:00		*	*	*
02:00		*	*	*
03:00		*	*	*
04:00		*	*	*
05:00		*	*	*
06:00		*	*	*
07:00		*	*	*
08:00		76	72	148
09:00		61	72	133
10:00		66	97	163
11:00		24	46	70
Total		227	287	
Percent		44.2%	55.8%	

Quality Counts, LLC
16285 SW 85th Ave. Ste. 105
Tigard, Oregon 97227

Site Code: 10134305
Station ID:
On Whitehead BT Olivia & Truman
75' S of Olivia
Latitude: 0' 0.000 Undefined

Start Time	20-Dec-05 Tue	NB	SB	Combined Total
12:00 AM		26	28	54
01:00		14	28	42
02:00		20	22	42
03:00		15	15	30
04:00		9	16	25
05:00		13	20	33
06:00		69	47	116
07:00		139	88	227
08:00		205	108	313
09:00		207	171	378
10:00		222	202	424
11:00		223	253	476
12:00 PM		272	230	502
01:00		254	222	476
02:00		206	262	468
03:00		216	263	479
04:00		192	230	422
05:00		168	252	420
06:00		136	162	298
07:00		109	140	249
08:00		66	94	160
09:00		92	107	199
10:00		42	78	120
11:00		45	49	94
Total		2960	3087	
Percent		48.9%	51.1%	

Quality Counts, LLC
16285 SW 85th Ave. Ste. 105
Tigard, Oregon 97227

Site Code: 10134305
Station ID:
On Whitehead BT Olivia & Truman
75' S of Olivia
Latitude: 0' 0.000 Undefined

Start Time	21-Dec-05 Wed	NB	SB	Combined Total
12:00 AM		20	25	45
01:00		16	28	44
02:00		6	18	24
03:00		13	15	28
04:00		11	15	26
05:00		12	19	31
06:00		70	41	111
07:00		129	87	216
08:00		215	125	340
09:00		166	160	326
10:00		217	192	409
11:00		241	223	464
12:00 PM		246	240	486
01:00		246	226	472
02:00		228	230	458
03:00		230	253	483
04:00		220	300	520
05:00		188	257	445
06:00		114	174	288
07:00		95	127	222
08:00		91	96	187
09:00		85	100	185
10:00		48	78	126
11:00		48	61	109
Total		2955	3090	
Percent		48.9%	51.1%	

Quality Counts, LLC
16285 SW 85th Ave. Ste. 105
Tigard, Oregon 97227

Site Code: 10134305
Station ID:
On Whitehead BT Olivia & Truman
75' S of Olivia
Latitude: 0' 0.000 Undefined

Start Time	22-Dec-05 Thu	NB	SB	Combined Total
12:00 AM		29	55	84
01:00		27	48	75
02:00		8	21	29
03:00		14	24	38
04:00		6	13	19
05:00		16	19	35
06:00		63	45	108
07:00		112	70	182
08:00		176	103	279
09:00		187	156	343
10:00		244	174	418
11:00		233	213	446
12:00 PM		201	234	435
01:00		244	222	466
02:00		228	231	459
03:00		233	253	486
04:00		232	266	498
05:00		205	254	459
06:00		137	156	293
07:00		106	136	242
08:00		*	*	*
09:00		*	*	*
10:00		*	*	*
11:00		*	*	*
Total		2701	2693	
Percent		50.1%	49.9%	
Grand Total		8843	9157	
Percentage		49.1%	50.9%	
ADT		ADT 6,000		AADT 6,000

Quality Counts, LLC
16285 SW 85th Ave. Ste. 105
Tigard, Oregon 97227

Site Code: 10134308
Station ID:
On Truman BT Thomas & Emma
200' W of Thomas
Latitude: 0' 0.000 Undefined

Start Time	Mon 19-Dec-05	Tue 20-Dec-05	Wed 21-Dec-05	Thu 22-Dec-05	Fri 23-Dec-05	Average Day	Sat 24-Dec-05	Sun 25-Dec-05	Week Average
12:00 AM	*	26	23	23	*	24	*	*	24
01:00	*	8	14	11	*	11	*	*	11
02:00	*	5	2	9	*	5	*	*	5
03:00	*	10	6	4	*	7	*	*	7
04:00	*	4	7	4	*	5	*	*	5
05:00	*	4	8	6	*	6	*	*	6
06:00	*	19	15	12	*	15	*	*	15
07:00	*	50	49	35	*	45	*	*	45
08:00	*	80	67	48	*	65	*	*	65
09:00	*	55	49	44	*	49	*	*	49
10:00	*	**83**	**79**	**83**	*	**82**	*	*	**82**
11:00	*	68	78	61	*	69	*	*	69
12:00 PM	*	84	80	65	*	76	*	*	76
01:00	*	86	93	84	*	88	*	*	88
02:00	*	79	61	78	*	73	*	*	73
03:00	*	80	63	77	*	73	*	*	73
04:00	*	**105**	85	**85**	*	**92**	*	*	**92**
05:00	*	91	**98**	80	*	90	*	*	90
06:00	*	78	72	53	*	68	*	*	68
07:00	*	78	47	68	*	64	*	*	64
08:00	**48**	40	61	*	*	50	*	*	50
09:00	44	47	63	*	*	51	*	*	51
10:00	42	44	42	*	*	43	*	*	43
11:00	22	39	37	*	*	33	*	*	33
Day Total	156	1263	1199	930	0	1184	0	0	1184
% Avg. WkDay	13.2%	106.7%	101.3%	78.5%	0.0%				
% Avg. Week	13.2%	106.7%	101.3%	78.5%	0.0%	100.0%	0.0%	0.0%	
AM Peak		10:00	10:00	10:00		10:00			10:00
Vol.		83	79	83		82			82
PM Peak	20:00	16:00	17:00	16:00		16:00			16:00
Vol.	48	105	98	85		92			92
Grand Total	156	1263	1199	930	0	1184	0	0	1184
ADT		ADT 1,183		AADT 1,183					

Quality Counts, LLC
16285 SW 85th Ave. Ste. 105
Tigard, Oregon 97227

Site Code: 10134308
Station ID:
On Truman BT Emma & Thomas
200' W of Thomas
Latitude: 0' 0.000 Undefined

Start Time	19-Dec-05 Mon	WB	EB	Combined Total
12:00 AM		*	*	*
01:00		*	*	*
02:00		*	*	*
03:00		*	*	*
04:00		*	*	*
05:00		*	*	*
06:00		*	*	*
07:00		*	*	*
08:00		*	*	*
09:00		*	*	*
10:00		*	*	*
11:00		*	*	*
12:00 PM		*	*	*
01:00		*	*	*
02:00		*	*	*
03:00		*	*	*
04:00		*	*	*
05:00		*	*	*
06:00		*	*	*
07:00		*	*	*
08:00		4	8	12
09:00		3	6	9
10:00		5	5	10
11:00		5	3	8
Total		17	22	
Percent		43.6%	56.4%	

Quality Counts, LLC
16285 SW 85th Ave. Ste. 105
Tigard, Oregon 97227

Site Code: 10134308
Station ID:
On Truman BT Emma & Thomas
200' W of Thomas
Latitude: 0' 0.000 Undefined

Start Time	20-Dec-05 Tue	WB	EB	Combined Total
12:00 AM		5	4	9
01:00		1	3	4
02:00		0	0	0
03:00		0	4	4
04:00		1	0	1
05:00		0	2	2
06:00		1	2	3
07:00		1	7	8
08:00		3	4	7
09:00		8	7	15
10:00		8	12	20
11:00		4	3	7
12:00 PM		7	8	15
01:00		7	8	15
02:00		4	8	12
03:00		8	5	13
04:00		12	9	21
05:00		7	8	15
06:00		10	8	18
07:00		6	9	15
08:00		1	4	5
09:00		4	6	10
10:00		1	6	7
11:00		6	8	14
Total		105	135	
Percent		43.8%	56.3%	

Quality Counts, LLC
16285 SW 85th Ave. Ste. 105
Tigard, Oregon 97227

Site Code: 10134308
Station ID:
On Truman BT Emma & Thomas
200' W of Thomas
Latitude: 0' 0.000 Undefined

Start Time	21-Dec-05 Wed	WB	EB	Combined Total
12:00 AM		0	1	1
01:00		2	0	2
02:00		0	1	1
03:00		0	0	0
04:00		1	1	2
05:00		0	0	0
06:00		2	4	6
07:00		1	5	6
08:00		5	5	10
09:00		4	9	13
10:00		9	8	17
11:00		8	16	24
12:00 PM		8	5	13
01:00		5	6	11
02:00		4	4	8
03:00		6	3	9
04:00		10	8	18
05:00		10	8	18
06:00		3	6	9
07:00		2	2	4
08:00		4	4	8
09:00		4	2	6
10:00		2	4	6
11:00		4	3	7
Total		94	105	
Percent		47.2%	52.8%	

Quality Counts, LLC
16285 SW 85th Ave. Ste. 105
Tigard, Oregon 97227

Site Code: 10134308
Station ID:
On Truman BT Emma & Thomas
200' W of Thomas
Latitude: 0' 0.000 Undefined

Start Time	22-Dec-05 Thu	WB	EB	Combined Total
12:00 AM		2	1	3
01:00		0	3	3
02:00		1	1	2
03:00		0	1	1
04:00		0	0	0
05:00		1	0	1
06:00		0	1	1
07:00		3	1	4
08:00		3	2	5
09:00		2	6	8
10:00		3	5	8
11:00		7	9	16
12:00 PM		3	4	7
01:00		3	9	12
02:00		9	6	15
03:00		10	10	20
04:00		8	9	17
05:00		7	13	20
06:00		2	0	2
07:00		6	7	13
08:00		*	*	*
09:00		*	*	*
10:00		*	*	*
11:00		*	*	*
Total		70	88	
Percent		44.3%	55.7%	
Grand Total		286	350	
Percentage		45.0%	55.0%	
ADT		Not Calculated		

Quality Counts, LLC
16285 SW 85th Ave. Ste. 105
Tigard, Oregon 97227

Site Code: 10134309
Station ID:
Emma BT Olivia & Truman

Latitude: 0' 0.000 Undefined

Start Time	19-Dec-05 Mon	NB	SB	Combined Total
12:00 AM		*	*	*
01:00		*	*	*
02:00		*	*	*
03:00		*	*	*
04:00		*	*	*
05:00		*	*	*
06:00		*	*	*
07:00		*	*	*
08:00		*	*	*
09:00		*	*	*
10:00		*	*	*
11:00		*	*	*
12:00 PM		*	*	*
01:00		*	*	*
02:00		*	*	*
03:00		*	*	*
04:00		*	*	*
05:00		*	*	*
06:00		*	*	*
07:00		*	*	*
08:00		*	*	*
09:00		*	*	*
10:00		26	24	50
11:00		13	14	27
Total		39	38	
Percent		50.6%	49.4%	

Quality Counts, LLC
16285 SW 85th Ave. Ste. 105
Tigard, Oregon 97227

Site Code: 10134309
Station ID:
Emma BT Olivia & Truman

Latitude: 0' 0.000 Undefined

Start Time	20-Dec-05 Tue	NB	SB	Combined Total
12:00 AM		14	22	36
01:00		11	11	22
02:00		3	4	7
03:00		0	9	9
04:00		2	5	7
05:00		1	9	10
06:00		8	10	18
07:00		21	20	41
08:00		36	27	63
09:00		39	29	68
10:00		36	32	68
11:00		35	28	63
12:00 PM		42	51	93
01:00		46	36	82
02:00		57	41	98
03:00		51	50	101
04:00		64	49	113
05:00		54	60	114
06:00		42	45	87
07:00		46	28	74
08:00		37	39	76
09:00		34	30	64
10:00		22	17	39
11:00		20	26	46
Total		721	678	
Percent		51.5%	48.5%	

Quality Counts, LLC
16285 SW 85th Ave. Ste. 105
Tigard, Oregon 97227

Site Code: 10134309
Station ID:
Emma BT Olivia & Truman

Latitude: 0' 0.000 Undefined

Start Time	21-Dec-05 Wed	NB	SB	Combined Total
12:00 AM		16	14	30
01:00		13	6	19
02:00		1	4	5
03:00		2	3	5
04:00		3	4	7
05:00		3	5	8
06:00		5	9	14
07:00		20	21	41
08:00		37	32	69
09:00		34	42	76
10:00		39	37	76
11:00		40	25	65
12:00 PM		43	36	79
01:00		45	36	81
02:00		38	39	77
03:00		46	39	85
04:00		61	55	116
05:00		58	62	120
06:00		36	44	80
07:00		47	30	77
08:00		34	31	65
09:00		25	27	52
10:00		15	25	40
11:00		22	21	43
Total		683	647	
Percent		51.4%	48.6%	

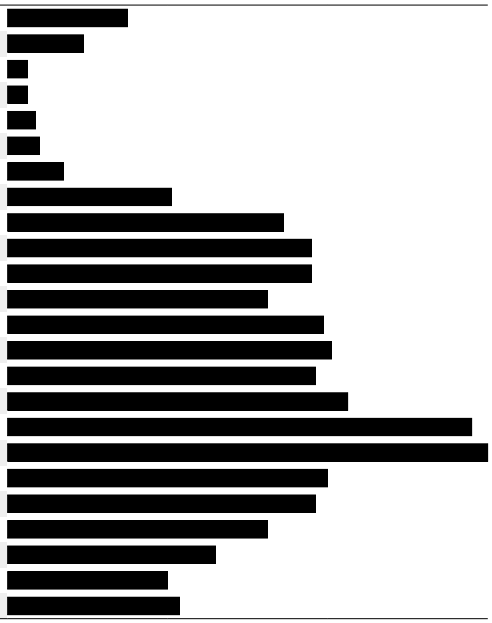

Quality Counts, LLC
16285 SW 85th Ave. Ste. 105
Tigard, Oregon 97227

Site Code: 10134309
Station ID:
Emma BT Olivia & Truman

Latitude: 0' 0.000 Undefined

Start Time	22-Dec-05 Thu	NB	SB	Combined Total
12:00 AM		18	21	39
01:00		8	11	19
02:00		0	6	6
03:00		1	4	5
04:00		1	2	3
05:00		1	4	5
06:00		9	6	15
07:00		18	24	42
08:00		21	21	42
09:00		24	31	55
10:00		38	27	65
11:00		40	31	71
12:00 PM		50	30	80
01:00		45	51	96
02:00		49	31	80
03:00		44	41	85
04:00		45	46	91
05:00		39	48	87
06:00		37	30	67
07:00		40	31	71
08:00		27	31	58
09:00		15	14	29
10:00		*	*	*
11:00		*	*	*
Total		570	541	
Percent		51.3%	48.7%	
Grand Total		2013	1904	
Percentage		51.4%	48.6%	
ADT		ADT 1,306		AADT 1,306

Quality Counts, LLC
16285 SW 85th Ave. Ste. 105
Tigard, Oregon 97227

Site Code: 10134310
Station ID:
Emma BT Petronia & Olivia

Latitude: 0' 0.000 Undefined

Start Time	19-Dec-05 Mon	NB	SB	Combined Total
12:00 AM		*	*	*
01:00		*	*	*
02:00		*	*	*
03:00		*	*	*
04:00		*	*	*
05:00		*	*	*
06:00		*	*	*
07:00		*	*	*
08:00		*	*	*
09:00		*	*	*
10:00		*	*	*
11:00		*	*	*
12:00 PM		*	*	*
01:00		*	*	*
02:00		*	*	*
03:00		*	*	*
04:00		*	*	*
05:00		*	*	*
06:00		*	*	*
07:00		*	*	*
08:00		*	*	*
09:00		*	*	*
10:00		29	48	77
11:00		17	30	47
Total		46	78	
Percent		37.1%	62.9%	

Quality Counts, LLC
16285 SW 85th Ave. Ste. 105
Tigard, Oregon 97227

Site Code: 10134310
Station ID:
Emma BT Petronia & Olivia

Latitude: 0' 0.000 Undefined

Start Time	20-Dec-05 Tue	NB	SB	Combined Total
12:00 AM		20	37	57
01:00		7	18	25
02:00		6	15	21
03:00		1	16	17
04:00		1	10	11
05:00		2	13	15
06:00		7	17	24
07:00		26	30	56
08:00		52	74	126
09:00		39	60	99
10:00		30	59	89
11:00		38	60	98
12:00 PM		54	85	139
01:00		45	71	116
02:00		66	60	126
03:00		46	82	128
04:00		65	97	162
05:00		64	108	172
06:00		50	69	119
07:00		48	65	113
08:00		43	71	114
09:00		33	61	94
10:00		21	41	62
11:00		15	34	49
Total		779	1253	
Percent		38.3%	61.7%	

Quality Counts, LLC
16285 SW 85th Ave. Ste. 105
Tigard, Oregon 97227

Site Code: 10134310
Station ID:
Emma BT Petronia & Olivia

Latitude: 0' 0.000 Undefined

Start Time	21-Dec-05 Wed	NB	SB	Combined Total
12:00 AM		20	27	47
01:00		11	18	29
02:00		3	16	19
03:00		3	4	7
04:00		9	9	18
05:00		1	7	8
06:00		10	14	24
07:00		11	30	41
08:00		37	64	101
09:00		32	59	91
10:00		35	65	100
11:00		37	45	82
12:00 PM		37	62	99
01:00		46	69	115
02:00		34	78	112
03:00		52	83	135
04:00		57	75	132
05:00		57	91	148
06:00		47	83	130
07:00		46	63	109
08:00		33	56	89
09:00		26	55	81
10:00		13	44	57
11:00		25	39	64
Total		682	1156	
Percent		37.1%	62.9%	

Quality Counts, LLC
16285 SW 85th Ave. Ste. 105
Tigard, Oregon 97227

Site Code: 10134310
Station ID:
Emma BT Petronia & Olivia

Latitude: 0' 0.000 Undefined

Start Time	22-Dec-05 Thu	NB	SB	Combined Total
12:00 AM		23	34	57
01:00		11	21	32
02:00		0	11	11
03:00		3	7	10
04:00		2	4	6
05:00		3	7	10
06:00		5	13	18
07:00		17	39	56
08:00		18	42	60
09:00		33	67	100
10:00		32	51	83
11:00		54	65	119
12:00 PM		49	64	113
01:00		41	85	126
02:00		42	64	106
03:00		50	62	112
04:00		41	84	125
05:00		41	82	123
06:00		31	74	105
07:00		35	60	95
08:00		19	57	76
09:00		17	20	37
10:00		*	*	*
11:00		*	*	*
Total		567	1013	
Percent		35.9%	64.1%	
Grand Total		2074	3500	
Percentage		37.2%	62.8%	
ADT		ADT 1,858		AADT 1,858

Quality Counts, LLC
16285 SW 85th Ave. Ste. 105
Tigard, Oregon 97227

Site Code: 10134311
Station ID:
Olivia BT Emma & Thomas

Latitude: 0' 0.000 Undefined

Start Time	Mon 19-Dec-05	Tue 20-Dec-05	Wed 21-Dec-05	Thu 22-Dec-05	Fri 23-Dec-05	Average Day	Sat 24-Dec-05	Sun 25-Dec-05	Week Average
12:00 AM	*	6	9	2	*	6	*	*	6
01:00	*	5	2	0	*	2	*	*	2
02:00	*	1	5	1	*	2	*	*	2
03:00	*	5	6	3	*	5	*	*	5
04:00	*	14	15	15	*	15	*	*	15
05:00	*	30	27	27	*	28	*	*	28
06:00	*	35	29	32	*	32	*	*	32
07:00	*	37	28	35	*	33	*	*	33
08:00	*	40	39	29	*	36	*	*	36
09:00	*	**49**	**51**	37	*	**46**	*	*	**46**
10:00	*	35	42	**48**	*	42	*	*	42
11:00	*	36	31	33	*	33	*	*	33
12:00 PM	*	46	45	**52**	*	48	*	*	48
01:00	*	42	**67**	32	*	47	*	*	47
02:00	*	52	51	44	*	**49**	*	*	**49**
03:00	*	**57**	50	41	*	49	*	*	49
04:00	*	35	35	39	*	36	*	*	36
05:00	*	42	50	34	*	42	*	*	42
06:00	*	40	31	47	*	39	*	*	39
07:00	*	42	24	23	*	30	*	*	30
08:00	*	23	24	17	*	21	*	*	21
09:00	7	16	18	*	*	14	*	*	14
10:00	9	15	22	*	*	15	*	*	15
11:00	**11**	10	5	*	*	9	*	*	9
Day Total	27	713	706	591	0	679	0	0	679
% Avg. WkDay	4.0%	105.0%	104.0%	87.0%	0.0%				
% Avg. Week	4.0%	105.0%	104.0%	87.0%	0.0%	100.0%	0.0%	0.0%	
AM Peak		09:00	09:00	10:00		09:00			09:00
Vol.		49	51	48		46			46
PM Peak	23:00	15:00	13:00	12:00		14:00			14:00
Vol.	11	57	67	52		49			49
Grand Total	27	713	706	591	0	679	0	0	679
ADT		ADT 679		AADT 679					

Quality Counts, LLC
16285 SW 85th Ave. Ste. 105
Tigard, Oregon 97227

Site Code: 10134312
Station ID:
Olivia BT Thomas & Whitehead

Latitude: 0' 0.000 Undefined

Start Time	Mon 19-Dec-05	Tue 20-Dec-05	Wed 21-Dec-05	Thu 22-Dec-05	Fri 23-Dec-05	Average Day	Sat 24-Dec-05	Sun 25-Dec-05	Week Average
12:00 AM	*	0	0	19	*	6	*	*	6
01:00	*	0	0	10	*	3	*	*	3
02:00	*	0	0	5	*	2	*	*	2
03:00	*	0	0	1	*	0	*	*	0
04:00	*	0	0	4	*	1	*	*	1
05:00	*	0	0	10	*	3	*	*	3
06:00	*	0	0	12	*	4	*	*	4
07:00	*	0	0	42	*	14	*	*	14
08:00	*	0	0	46	*	15	*	*	15
09:00	*	0	0	42	*	14	*	*	14
10:00	*	0	0	45	*	15	*	*	15
11:00	*	0	**45**	**60**	*	**35**	*	*	**35**
12:00 PM	*	0	61	59	*	40	*	*	40
01:00	*	0	61	49	*	37	*	*	37
02:00	*	0	59	75	*	45	*	*	45
03:00	*	0	**85**	65	*	50	*	*	50
04:00	*	0	83	**77**	*	**53**	*	*	**53**
05:00	*	0	58	58	*	39	*	*	39
06:00	*	0	48	41	*	30	*	*	30
07:00	*	0	70	44	*	38	*	*	38
08:00	*	0	50	40	*	30	*	*	30
09:00	*	0	20	26	*	15	*	*	15
10:00	*	0	20	*	*	10	*	*	10
11:00	0	0	21	*	*	7	*	*	7
Day Total	0	0	681	830	0	506	0	0	506
% Avg. WkDay	0.0%	0.0%	134.6%	164.0%	0.0%				
% Avg. Week	0.0%	0.0%	134.6%	164.0%	0.0%	100.0%	0.0%	0.0%	
AM Peak			11:00	11:00		11:00			11:00
Vol.			45	60		35			35
PM Peak			15:00	16:00		16:00			16:00
Vol.			85	77		53			53
Grand Total	0	0	681	830	0	506	0	0	506

ADT ADT 504 AADT 504

Quality Counts, LLC
16285 SW 85th Ave. Ste. 105
Tigard, Oregon 97227

Site Code: 10134313
Station ID:
Petronia BT Emma & Thomas

Latitude: 0' 0.000 Undefined

Start Time	Mon 19-Dec-05	Tue 20-Dec-05	Wed 21-Dec-05	Thu 22-Dec-05	Fri 23-Dec-05	Average Day	Sat 24-Dec-05	Sun 25-Dec-05	Week Average
12:00 AM	*	32	14	25	*	24	*	*	24
01:00	*	18	14	30	*	21	*	*	21
02:00	*	10	13	16	*	13	*	*	13
03:00	*	18	2	14	*	11	*	*	11
04:00	*	3	4	3	*	3	*	*	3
05:00	*	12	16	6	*	11	*	*	11
06:00	*	12	2	10	*	8	*	*	8
07:00	*	23	17	18	*	19	*	*	19
08:00	*	33	**44**	34	*	37	*	*	37
09:00	*	**48**	41	52	*	**47**	*	*	**47**
10:00	*	41	39	48	*	43	*	*	43
11:00	*	36	40	**54**	*	43	*	*	43
12:00 PM	*	58	44	48	*	50	*	*	50
01:00	*	58	40	61	*	53	*	*	53
02:00	*	56	46	47	*	50	*	*	50
03:00	*	62	49	42	*	51	*	*	51
04:00	*	72	**76**	51	*	66	*	*	66
05:00	*	**82**	71	**66**	*	**73**	*	*	**73**
06:00	*	69	57	62	*	63	*	*	63
07:00	*	57	52	56	*	55	*	*	55
08:00	*	57	50	40	*	49	*	*	49
09:00	**30**	48	46	18	*	36	*	*	36
10:00	30	46	38	*	*	38	*	*	38
11:00	25	38	52	*	*	38	*	*	38
Day Total	85	989	867	801	0	902	0	0	902
% Avg. WkDay	9.4%	109.6%	96.1%	88.8%	0.0%				
% Avg. Week	9.4%	109.6%	96.1%	88.8%	0.0%	100.0%	0.0%	0.0%	
AM Peak		09:00	08:00	11:00		09:00			09:00
Vol.		48	44	54		47			47
PM Peak	21:00	17:00	16:00	17:00		17:00			17:00
Vol.	30	82	76	66		73			73
Grand Total	85	989	867	801	0	902	0	0	902

ADT ADT 901 AADT 901

Quality Counts, LLC
16285 SW 85th Ave. Ste. 105
Tigard, Oregon 97227

Site Code: 10134314
Station ID:
Petronia BT Thomas & Whitehead

Latitude: 0' 0.000 Undefined

Start Time	Mon 19-Dec-05	Tue 20-Dec-05	Wed 21-Dec-05	Thu 22-Dec-05	Fri 23-Dec-05	Average Day	Sat 24-Dec-05	Sun 25-Dec-05	Week Average
12:00 AM	*	33	8	14	*	18	*	*	18
01:00	*	14	14	14	*	14	*	*	14
02:00	*	9	12	6	*	9	*	*	9
03:00	*	6	12	24	*	14	*	*	14
04:00	*	13	8	4	*	8	*	*	8
05:00	*	7	5	11	*	8	*	*	8
06:00	*	17	12	11	*	13	*	*	13
07:00	*	25	16	29	*	23	*	*	23
08:00	*	44	54	44	*	47	*	*	47
09:00	*	66	60	64	*	63	*	*	63
10:00	*	77	58	80	*	72	*	*	72
11:00	*	**89**	**69**	**82**	*	**80**	*	*	**80**
12:00 PM	*	90	**88**	71	*	83	*	*	83
01:00	*	**102**	82	**94**	*	**93**	*	*	**93**
02:00	*	86	79	82	*	82	*	*	82
03:00	*	94	76	81	*	84	*	*	84
04:00	*	87	82	88	*	86	*	*	86
05:00	*	83	86	90	*	86	*	*	86
06:00	*	60	66	58	*	61	*	*	61
07:00	*	54	54	46	*	51	*	*	51
08:00	*	52	30	42	*	41	*	*	41
09:00	*	41	38	38	*	39	*	*	39
10:00	**36**	33	26	*	*	32	*	*	32
11:00	32	26	36	*	*	31	*	*	31
Day Total	68	1208	1071	1073	0	1138	0	0	1138
% Avg. WkDay	6.0%	106.2%	94.1%	94.3%	0.0%				
% Avg. Week	6.0%	106.2%	94.1%	94.3%	0.0%	100.0%	0.0%	0.0%	
AM Peak		11:00	11:00	11:00		11:00			11:00
Vol.		89	69	82		80			80
PM Peak	22:00	13:00	12:00	13:00		13:00			13:00
Vol.	36	102	88	94		93			93
Grand Total	68	1208	1071	1073	0	1138	0	0	1138

ADT Not Calculated

Quality Counts, LLC
16285 SW 85th Ave. Ste. 105
Tigard, Oregon 97227

Site Code: 10134315
Station ID:
Thomas BT Southard & Angela
75' S of Southard
Latitude: 0' 0.000 Undefined

Start Time	19-Dec-05 Mon	NB	SB	Combined Total
12:00 AM		*	*	*
01:00		*	*	*
02:00		*	*	*
03:00		*	*	*
04:00		*	*	*
05:00		*	*	*
06:00		*	*	*
07:00		*	*	*
08:00		*	*	*
09:00		*	*	*
10:00		*	*	*
11:00		*	*	*
12:00 PM		*	*	*
01:00		*	*	*
02:00		*	*	*
03:00		*	*	*
04:00		*	*	*
05:00		*	*	*
06:00		*	*	*
07:00		17	34	51
08:00		19	24	43
09:00		12	15	27
10:00		10	17	27
11:00		10	20	30
Total		68	110	
Percent		38.2%	61.8%	

Quality Counts, LLC
16285 SW 85th Ave. Ste. 105
Tigard, Oregon 97227

Site Code: 10134315
Station ID:
Thomas BT Southard & Angela
75' S of Southard
Latitude: 0' 0.000 Undefined

Start Time	20-Dec-05 Tue	NB	SB	Combined Total
12:00 AM		10	11	21
01:00		3	5	8
02:00		1	5	6
03:00		3	3	6
04:00		2	1	3
05:00		4	4	8
06:00		14	8	22
07:00		45	25	70
08:00		60	44	104
09:00		48	66	114
10:00		59	66	125
11:00		75	88	163
12:00 PM		54	70	124
01:00		75	99	174
02:00		53	62	115
03:00		51	70	121
04:00		46	80	126
05:00		33	101	134
06:00		20	33	53
07:00		24	32	56
08:00		16	32	48
09:00		11	31	42
10:00		15	16	31
11:00		3	16	19
Total		725	968	
Percent		42.8%	57.2%	

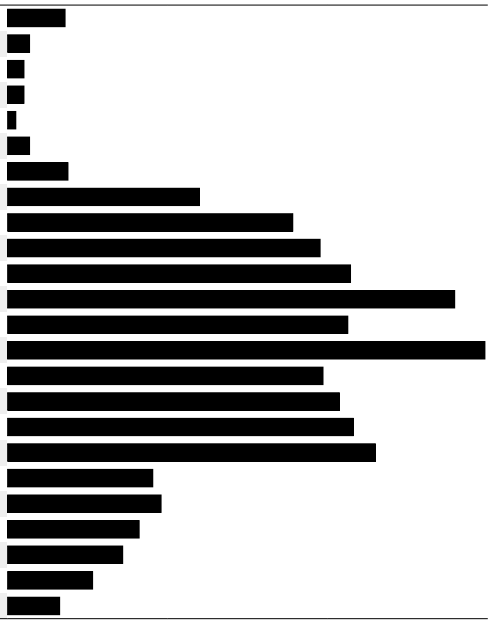

Quality Counts, LLC
16285 SW 85th Ave. Ste. 105
Tigard, Oregon 97227

Site Code: 10134315
Station ID:
Thomas BT Southard & Angela
75' S of Southard
Latitude: 0' 0.000 Undefined

Start Time	21-Dec-05 Wed	NB	SB	Combined Total
12:00 AM		3	3	6
01:00		3	3	6
02:00		0	1	1
03:00		2	1	3
04:00		2	6	8
05:00		2	1	3
06:00		21	13	34
07:00		35	35	70
08:00		58	48	106
09:00		27	42	69
10:00		69	64	133
11:00		51	77	128
12:00 PM		89	86	175
01:00		61	85	146
02:00		58	83	141
03:00		52	70	122
04:00		59	60	119
05:00		35	96	131
06:00		15	46	61
07:00		26	28	54
08:00		15	24	39
09:00		9	31	40
10:00		10	18	28
11:00		10	15	25
Total		712	936	
Percent		43.2%	56.8%	

Quality Counts, LLC
16285 SW 85th Ave. Ste. 105
Tigard, Oregon 97227

Site Code: 10134315
Station ID:
Thomas BT Southard & Angela
75' S of Southard
Latitude: 0' 0.000 Undefined

Start Time	22-Dec-05 Thu	NB	SB	Combined Total
12:00 AM		3	10	13
01:00		0	7	7
02:00		1	5	6
03:00		0	2	2
04:00		3	4	7
05:00		5	2	7
06:00		21	10	31
07:00		36	14	50
08:00		62	26	88
09:00		42	44	86
10:00		55	56	111
11:00		55	69	124
12:00 PM		63	74	137
01:00		59	64	123
02:00		54	62	116
03:00		52	75	127
04:00		39	71	110
05:00		42	86	128
06:00		22	35	57
07:00		*	*	*
08:00		*	*	*
09:00		*	*	*
10:00		*	*	*
11:00		*	*	*
Total		614	716	
Percent		46.2%	53.8%	
Grand Total		2119	2730	
Percentage		43.7%	56.3%	
ADT		Not Calculated		

Quality Counts, LLC
16285 SW 85th Ave. Ste. 105
Tigard, Oregon 97227

Site Code: 10134316
Station ID:
Thomas BT Angela & Petronia
100' S of Angela
Latitude: 0' 0.000 Undefined

Start Time	19-Dec-05 Mon	NB	SB	Combined Total
12:00 AM		*	*	*
01:00		*	*	*
02:00		*	*	*
03:00		*	*	*
04:00		*	*	*
05:00		*	*	*
06:00		*	*	*
07:00		*	*	*
08:00		*	*	*
09:00		*	*	*
10:00		*	*	*
11:00		*	*	*
12:00 PM		*	*	*
01:00		*	*	*
02:00		*	*	*
03:00		*	*	*
04:00		*	*	*
05:00		*	*	*
06:00		*	*	*
07:00		43	15	58
08:00		37	12	49
09:00		21	11	32
10:00		29	6	35
11:00		28	10	38
Total		158	54	
Percent		74.5%	25.5%	

Quality Counts, LLC
16285 SW 85th Ave. Ste. 105
Tigard, Oregon 97227

Site Code: 10134316
Station ID:
Thomas BT Angela & Petronia
100' S of Angela
Latitude: 0' 0.000 Undefined

Start Time	20-Dec-05 Tue	NB	SB	Combined Total
12:00 AM		12	5	17
01:00		8	5	13
02:00		6	3	9
03:00		4	2	6
04:00		8	1	9
05:00		12	1	13
06:00		18	6	24
07:00		31	14	45
08:00		62	21	83
09:00		72	38	110
10:00		76	26	102
11:00		87	40	127
12:00 PM		80	36	116
01:00		106	31	137
02:00		79	39	118
03:00		81	29	110
04:00		57	55	112
05:00		68	52	120
06:00		47	28	75
07:00		53	24	77
08:00		35	14	49
09:00		42	19	61
10:00		21	9	30
11:00		20	8	28
Total		1085	506	
Percent		68.2%	31.8%	

Quality Counts, LLC
16285 SW 85th Ave. Ste. 105
Tigard, Oregon 97227

Site Code: 10134316
Station ID:
Thomas BT Angela & Petronia
100' S of Angela
Latitude: 0' 0.000 Undefined

Start Time	21-Dec-05 Wed	NB	SB	Combined Total
12:00 AM		6	5	11
01:00		5	4	9
02:00		7	4	11
03:00		8	1	9
04:00		8	2	10
05:00		2	0	2
06:00		23	4	27
07:00		23	12	35
08:00		49	17	66
09:00		55	27	82
10:00		77	31	108
11:00		74	33	107
12:00 PM		119	44	163
01:00		89	45	134
02:00		84	30	114
03:00		75	30	105
04:00		92	40	132
05:00		79	46	125
06:00		63	25	88
07:00		70	18	88
08:00		19	13	32
09:00		20	12	32
10:00		16	10	26
11:00		31	9	40
Total		1094	462	
Percent		70.3%	29.7%	

Quality Counts, LLC
16285 SW 85th Ave. Ste. 105
Tigard, Oregon 97227

Site Code: 10134316
Station ID:
Thomas BT Angela & Petronia
100' S of Angela
Latitude: 0' 0.000 Undefined

Start Time	22-Dec-05 Thu	NB	SB	Combined Total
12:00 AM		12	6	18
01:00		13	5	18
02:00		2	3	5
03:00		8	0	8
04:00		4	1	5
05:00		4	0	4
06:00		13	5	18
07:00		37	3	40
08:00		51	13	64
09:00		53	25	78
10:00		86	32	118
11:00		74	35	109
12:00 PM		89	34	123
01:00		84	24	108
02:00		73	41	114
03:00		93	55	148
04:00		72	36	108
05:00		80	27	107
06:00		55	15	70
07:00		*	*	*
08:00		*	*	*
09:00		*	*	*
10:00		*	*	*
11:00		*	*	*
Total		903	360	
Percent		71.5%	28.5%	
Grand Total		3240	1382	
Percentage		70.1%	29.9%	
ADT		ADT 1,541		AADT 1,541

Quality Counts, LLC
16285 SW 85th Ave. Ste. 105
Tigard, Oregon 97227

Site Code: 10134317
Station ID:
Thomas BT Olivia & Petronia
100' S of Petronia
Latitude: 0' 0.000 Undefined

Start Time	19-Dec-05 Mon	NB	SB	Combined Total
12:00 AM		*	*	*
01:00		*	*	*
02:00		*	*	*
03:00		*	*	*
04:00		*	*	*
05:00		*	*	*
06:00		*	*	*
07:00		*	*	*
08:00		*	*	*
09:00		*	*	*
10:00		*	*	*
11:00		*	*	*
12:00 PM		*	*	*
01:00		*	*	*
02:00		*	*	*
03:00		*	*	*
04:00		*	*	*
05:00		*	*	*
06:00		*	*	*
07:00		19	22	41
08:00		23	21	44
09:00		14	24	38
10:00		15	19	34
11:00		16	20	36
Total		87	106	
Percent		45.1%	54.9%	

Quality Counts, LLC
16285 SW 85th Ave. Ste. 105
Tigard, Oregon 97227

Site Code: 10134317
Station ID:
Thomas BT Olivia & Petronia
100' S of Petronia
Latitude: 0' 0.000 Undefined

Start Time	20-Dec-05 Tue	NB	SB	Combined Total
12:00 AM		15	12	27
01:00		9	10	19
02:00		5	7	12
03:00		6	0	6
04:00		6	3	9
05:00		6	3	9
06:00		8	9	17
07:00		18	19	37
08:00		31	27	58
09:00		33	52	85
10:00		36	51	87
11:00		48	62	110
12:00 PM		41	55	96
01:00		53	65	118
02:00		33	65	98
03:00		41	53	94
04:00		41	70	111
05:00		45	75	120
06:00		37	44	81
07:00		37	39	76
08:00		30	22	52
09:00		26	20	46
10:00		17	15	32
11:00		17	22	39
Total		639	800	
Percent		44.4%	55.6%	

Quality Counts, LLC
16285 SW 85th Ave. Ste. 105
Tigard, Oregon 97227

Site Code: 10134317
Station ID:
Thomas BT Olivia & Petronia
100' S of Petronia
Latitude: 0' 0.000 Undefined

Start Time	21-Dec-05 Wed	NB	SB	Combined Total
12:00 AM		6	6	12
01:00		5	9	14
02:00		6	3	9
03:00		2	1	3
04:00		2	3	5
05:00		6	2	8
06:00		6	11	17
07:00		8	17	25
08:00		25	37	62
09:00		35	30	65
10:00		33	54	87
11:00		45	61	106
12:00 PM		54	69	123
01:00		35	56	91
02:00		48	69	117
03:00		34	69	103
04:00		46	60	106
05:00		50	77	127
06:00		45	33	78
07:00		35	40	75
08:00		23	23	46
09:00		19	19	38
10:00		17	22	39
11:00		18	12	30
Total		603	783	
Percent		43.5%	56.5%	

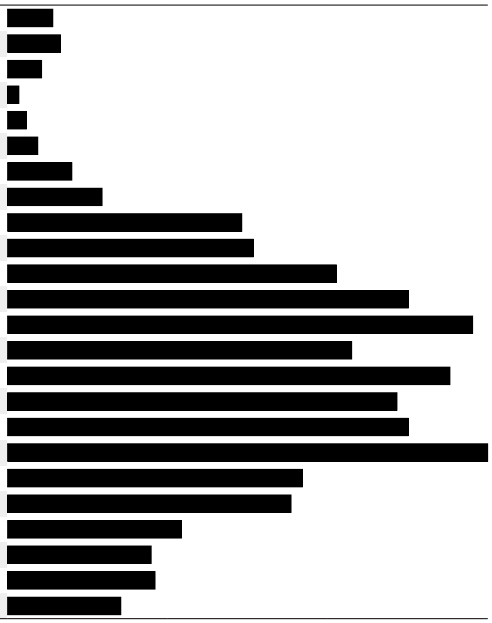

Quality Counts, LLC
16285 SW 85th Ave. Ste. 105
Tigard, Oregon 97227

Site Code: 10134317
Station ID:
Thomas BT Olivia & Petronia
100' S of Petronia
Latitude: 0' 0.000 Undefined

Start Time	22-Dec-05 Thu	NB	SB	Combined Total
12:00 AM		19	13	32
01:00		8	10	18
02:00		1	5	6
03:00		3	2	5
04:00		2	4	6
05:00		3	3	6
06:00		14	12	26
07:00		16	13	29
08:00		21	21	42
09:00		35	29	64
10:00		40	51	91
11:00		46	65	111
12:00 PM		39	51	90
01:00		45	43	88
02:00		42	61	103
03:00		41	69	110
04:00		39	60	99
05:00		48	79	127
06:00		30	27	57
07:00		*	*	*
08:00		*	*	*
09:00		*	*	*
10:00		*	*	*
11:00		*	*	*
Total		492	618	
Percent		44.3%	55.7%	
Grand Total		1821	2307	
Percentage		44.1%	55.9%	
ADT		ADT 1,376		AADT 1,376

Quality Counts, LLC
16285 SW 85th Ave. Ste. 105
Tigard, Oregon 97227

Site Code: 10134318
Station ID:
Thomas BT Olivia & Truman
100' S of Olivia
Latitude: 0' 0.000 Undefined

Start Time	19-Dec-05 Mon	NB	SB	Combined Total
12:00 AM		*	*	*
01:00		*	*	*
02:00		*	*	*
03:00		*	*	*
04:00		*	*	*
05:00		*	*	*
06:00		*	*	*
07:00		*	*	*
08:00		*	*	*
09:00		*	*	*
10:00		*	*	*
11:00		*	*	*
12:00 PM		*	*	*
01:00		*	*	*
02:00		*	*	*
03:00		*	*	*
04:00		*	*	*
05:00		*	*	*
06:00		*	*	*
07:00		12	18	30
08:00		25	24	49
09:00		20	19	39
10:00		19	19	38
11:00		17	13	30
Total		93	93	
Percent		50.0%	50.0%	

Quality Counts, LLC
16285 SW 85th Ave. Ste. 105
Tigard, Oregon 97227

Site Code: 10134318
Station ID:
Thomas BT Olivia & Truman
100' S of Olivia
Latitude: 0' 0.000 Undefined

Start Time	20-Dec-05 Tue	NB	SB	Combined Total
12:00 AM		16	9	25
01:00		11	8	19
02:00		6	10	16
03:00		8	0	8
04:00		6	3	9
05:00		3	2	5
06:00		6	7	13
07:00		17	17	34
08:00		29	34	63
09:00		49	47	96
10:00		32	52	84
11:00		46	52	98
12:00 PM		42	51	93
01:00		66	59	125
02:00		38	61	99
03:00		49	49	98
04:00		54	58	112
05:00		52	73	125
06:00		37	40	77
07:00		34	29	63
08:00		26	25	51
09:00		24	20	44
10:00		15	12	27
11:00		19	17	36
Total		685	735	
Percent		48.2%	51.8%	

Quality Counts, LLC
16285 SW 85th Ave. Ste. 105
Tigard, Oregon 97227

Site Code: 10134318
Station ID:
Thomas BT Olivia & Truman
100' S of Olivia
Latitude: 0' 0.000 Undefined

Start Time	21-Dec-05 Wed	NB	SB	Combined Total
12:00 AM		8	9	17
01:00		5	8	13
02:00		7	1	8
03:00		3	1	4
04:00		2	3	5
05:00		4	3	7
06:00		8	10	18
07:00		14	18	32
08:00		31	37	68
09:00		31	26	57
10:00		41	47	88
11:00		51	47	98
12:00 PM		48	62	110
01:00		41	53	94
02:00		52	55	107
03:00		33	51	84
04:00		52	45	97
05:00		57	82	139
06:00		47	33	80
07:00		45	32	77
08:00		23	19	42
09:00		26	21	47
10:00		11	19	30
11:00		18	8	26
Total		658	690	
Percent		48.8%	51.2%	

Quality Counts, LLC
16285 SW 85th Ave. Ste. 105
Tigard, Oregon 97227

Site Code: 10134318
Station ID:
Thomas BT Olivia & Truman
100' S of Olivia
Latitude: 0' 0.000 Undefined

Start Time	22-Dec-05 Thu	NB	SB	Combined Total
12:00 AM		21	13	34
01:00		8	7	15
02:00		1	5	6
03:00		3	2	5
04:00		3	3	6
05:00		2	3	5
06:00		10	12	22
07:00		21	13	34
08:00		25	21	46
09:00		41	25	66
10:00		42	42	84
11:00		48	51	99
12:00 PM		45	55	100
01:00		44	45	89
02:00		49	51	100
03:00		42	59	101
04:00		58	58	116
05:00		49	67	116
06:00		19	25	44
07:00		*	*	*
08:00		*	*	*
09:00		*	*	*
10:00		*	*	*
11:00		*	*	*
Total		531	557	
Percent		48.8%	51.2%	
Grand Total		1967	2075	
Percentage		48.7%	51.3%	
ADT		ADT 1,347		AADT 1,347

Quality Counts, LLC
16285 SW 85th Ave. Ste. 105
Tigard, Oregon 97227

Site Code: 10134319
Station ID:
Angela BT Whitehead & Thomas

Latitude: 0' 0.000 Undefined

Start Time	19-Dec-05 Mon	WB	EB	Combined Total
12:00 AM		*	*	*
01:00		*	*	*
02:00		*	*	*
03:00		*	*	*
04:00		*	*	*
05:00		*	*	*
06:00		*	*	*
07:00		*	*	*
08:00		*	*	*
09:00		*	*	*
10:00		*	*	*
11:00		*	*	*
12:00 PM		*	*	*
01:00		*	*	*
02:00		*	*	*
03:00		*	*	*
04:00		*	*	*
05:00		*	*	*
06:00		*	*	*
07:00		*	*	*
08:00		*	*	*
09:00		*	*	*
10:00		11	17	28
11:00		12	27	39
Total		23	44	
Percent		34.3%	65.7%	

Quality Counts, LLC
16285 SW 85th Ave. Ste. 105
Tigard, Oregon 97227

Site Code: 10134319
Station ID:
Angela BT Whitehead & Thomas

Latitude: 0' 0.000 Undefined

Start Time	20-Dec-05 Tue	WB	EB	Combined Total
12:00 AM		9	22	31
01:00		9	10	19
02:00		9	6	15
03:00		5	5	10
04:00		3	5	8
05:00		6	12	18
06:00		11	26	37
07:00		31	39	70
08:00		47	63	110
09:00		33	60	93
10:00		28	58	86
11:00		35	91	126
12:00 PM		42	76	118
01:00		45	96	141
02:00		43	68	111
03:00		47	75	122
04:00		44	72	116
05:00		33	96	129
06:00		29	46	75
07:00		27	49	76
08:00		18	36	54
09:00		19	43	62
10:00		19	26	45
11:00		12	21	33
Total		604	1101	
Percent		35.4%	64.6%	

Quality Counts, LLC
16285 SW 85th Ave. Ste. 105
Tigard, Oregon 97227

Site Code: 10134319
Station ID:
Angela BT Whitehead & Thomas

Latitude: 0' 0.000 Undefined

Start Time	21-Dec-05 Wed	WB	EB	Combined Total
12:00 AM		8	9	17
01:00		9	10	19
02:00		5	9	14
03:00		4	3	7
04:00		2	9	11
05:00		2	5	7
06:00		11	25	36
07:00		25	40	65
08:00		37	62	99
09:00		28	71	99
10:00		35	53	88
11:00		36	76	112
12:00 PM		39	72	111
01:00		46	80	126
02:00		33	70	103
03:00		41	63	104
04:00		44	84	128
05:00		47	81	128
06:00		21	53	74
07:00		21	41	62
08:00		27	24	51
09:00		14	26	40
10:00		13	26	39
11:00		12	30	42
Total		560	1022	
Percent		35.4%	64.6%	

Quality Counts, LLC
16285 SW 85th Ave. Ste. 105
Tigard, Oregon 97227

Site Code: 10134319
Station ID:
Angela BT Whitehead & Thomas

Latitude: 0' 0.000 Undefined

Start Time	22-Dec-05 Thu	WB	EB	Combined Total
12:00 AM		12	20	32
01:00		6	18	24
02:00		5	1	6
03:00		0	10	10
04:00		4	4	8
05:00		4	5	9
06:00		12	22	34
07:00		25	32	57
08:00		37	45	82
09:00		27	63	90
10:00		32	79	111
11:00		33	73	106
12:00 PM		34	63	97
01:00		36	88	124
02:00		29	71	100
03:00		39	74	113
04:00		33	72	105
05:00		40	72	112
06:00		24	50	74
07:00		26	41	67
08:00		19	31	50
09:00		17	28	45
10:00		*	*	*
11:00		*	*	*
Total		494	962	
Percent		33.9%	66.1%	
Grand Total		1681	3129	
Percentage		34.9%	65.1%	
ADT		ADT 1,603		AADT 1,603

Quality Counts, LLC
16285 SW 85th Ave. Ste. 105
Tigard, Oregon 97227

Site Code: 10134320
Station ID:
On Angela BT Thomas & Emma

Latitude: 0' 0.000 Undefined

Start Time	19-Dec-05 Mon	WB	EB	Combined Total
12:00 AM		*	*	*
01:00		*	*	*
02:00		*	*	*
03:00		*	*	*
04:00		*	*	*
05:00		*	*	*
06:00		*	*	*
07:00		*	*	*
08:00		*	*	*
09:00		*	*	*
10:00		*	*	*
11:00		*	*	*
12:00 PM		*	*	*
01:00		*	*	*
02:00		*	*	*
03:00		*	*	*
04:00		*	*	*
05:00		*	*	*
06:00		*	*	*
07:00		*	*	*
08:00		*	*	*
09:00		17	10	27
10:00		16	18	34
11:00		17	8	25
Total		50	36	
Percent		58.1%	41.9%	

Quality Counts, LLC
16285 SW 85th Ave. Ste. 105
Tigard, Oregon 97227

Site Code: 10134320
Station ID:
On Angela BT Thomas & Emma

Latitude: 0' 0.000 Undefined

Start Time	20-Dec-05 Tue	WB	EB	Combined Total
12:00 AM		18	10	28
01:00		13	5	18
02:00		5	6	11
03:00		2	2	4
04:00		2	4	6
05:00		4	7	11
06:00		7	2	9
07:00		28	8	36
08:00		31	15	46
09:00		28	22	50
10:00		29	22	51
11:00		41	29	70
12:00 PM		43	34	77
01:00		48	30	78
02:00		37	29	66
03:00		41	33	74
04:00		44	25	69
05:00		55	30	85
06:00		26	17	43
07:00		31	7	38
08:00		25	14	39
09:00		25	20	45
10:00		13	9	22
11:00		14	10	24
Total		610	390	
Percent		61.0%	39.0%	

Quality Counts, LLC
16285 SW 85th Ave. Ste. 105
Tigard, Oregon 97227

Site Code: 10134320
Station ID:
On Angela BT Thomas & Emma

Latitude: 0' 0.000 Undefined

Start Time	21-Dec-05 Wed	WB	EB	Combined Total
12:00 AM		10	7	17
01:00		9	4	13
02:00		6	3	9
03:00		0	2	2
04:00		5	4	9
05:00		3	1	4
06:00		7	2	9
07:00		19	9	28
08:00		36	13	49
09:00		32	20	52
10:00		30	16	46
11:00		35	20	55
12:00 PM		38	26	64
01:00		43	25	68
02:00		37	29	66
03:00		26	27	53
04:00		49	22	71
05:00		54	30	84
06:00		17	25	42
07:00		31	14	45
08:00		20	12	32
09:00		19	15	34
10:00		15	8	23
11:00		21	13	34
Total		562	347	
Percent		61.8%	38.2%	

Quality Counts, LLC
16285 SW 85th Ave. Ste. 105
Tigard, Oregon 97227

Site Code: 10134320
Station ID:
On Angela BT Thomas & Emma

Latitude: 0' 0.000 Undefined

Start Time	22-Dec-05 Thu	WB	EB	Combined Total
12:00 AM		15	9	24
01:00		9	2	11
02:00		3	2	5
03:00		4	0	4
04:00		3	3	6
05:00		4	2	6
06:00		6	2	8
07:00		21	7	28
08:00		25	15	40
09:00		36	11	47
10:00		34	13	47
11:00		46	14	60
12:00 PM		37	16	53
01:00		48	21	69
02:00		33	18	51
03:00		40	21	61
04:00		39	30	69
05:00		31	23	54
06:00		24	19	43
07:00		32	19	51
08:00		18	18	36
09:00		*	*	*
10:00		*	*	*
11:00		*	*	*
Total		508	265	
Percent		65.7%	34.3%	
Grand Total		1730	1038	
Percentage		62.5%	37.5%	
ADT		ADT 923		AADT 923

APPENDIX C
EXISTING LEVEL OF SERVICE

ATEC
Advanced Transportation
Engineering Consultants

Existing AM LOS

ATEC
Advanced Transportation
Engineering Consultants

Movement	EBL	EBT	EBR	WBL	WBT	WBR	NBL	NBT	NBR	SBL	SBT	SBR
Lane Configurations												
Ideal Flow (vphpl)	1900	1900	1900	1900	1900	1900	1900	1900	1900	1900	1900	1900
Lane Width	12	12	12	12	12	12	12	11	12	12	11	12
Total Lost time (s)	4.0		4.0		4.0			4.0			4.0	
Lane Util. Factor	1.00		1.00		1.00			1.00			1.00	
Frpb, ped/bikes	1.00		0.88		0.96			1.00			0.93	
Flpb, ped/bikes	0.91		1.00		0.94			0.96			1.00	
Frt	1.00		0.85		0.95			1.00			0.92	
Flt Protected	0.95		1.00		0.97			0.98			1.00	
Satd. Flow (prot)	1149		992		1098			1212			1106	
Flt Permitted	0.74		1.00		0.97			0.86			1.00	
Satd. Flow (perm)	895		992		1098			1060			1106	
Volume (vph)	54	0	36	51	2	29	59	82	0	0	49	63
Peak-hour factor, PHF	0.92	0.92	0.92	0.92	0.92	0.92	0.92	0.92	0.92	0.92	0.92	0.92
Adj. Flow (vph)	59	0	39	55	2	32	64	89	0	0	53	68
RTOR Reduction (vph)	0	0	25	0	20	0	0	0	0	0	33	0
Lane Group Flow (vph)	59	0	14	0	69	0	0	153	0	0	88	0
Confl. Peds. (#/hr)	50		50	50		50	50		50	50		50
Parking (#/hr)	20	20	20	20	20	20	20	20	20	20	20	20
Turn Type	custom		custom	Perm			Perm					
Protected Phases					8			2			6	
Permitted Phases	4		4	8			2					
Actuated Green, G (s)	25.0		25.0		25.0			35.0			35.0	
Effective Green, g (s)	26.0		26.0		26.0			36.0			36.0	
Actuated g/C Ratio	0.37		0.37		0.37			0.51			0.51	
Clearance Time (s)	5.0		5.0		5.0			5.0			5.0	
Lane Grp Cap (vph)	332		368		408			545			569	
v/s Ratio Prot											0.08	
v/s Ratio Perm	c0.07		0.01		0.06			c0.14				
v/c Ratio	0.18		0.04		0.17			0.28			0.15	
Uniform Delay, d1	14.8		14.0		14.8			9.7			9.0	
Progression Factor	1.00		1.00		1.00			1.00			1.00	
Incremental Delay, d2	1.2		0.2		0.9			1.3			0.6	
Delay (s)	16.0		14.2		15.6			10.9			9.5	
Level of Service	B		B		B			B			A	
Approach Delay (s)		15.3			15.6			10.9			9.5	
Approach LOS		B			B			B			A	

Intersection Summary			
HCM Average Control Delay	12.4	HCM Level of Service	B
HCM Volume to Capacity ratio	0.24		
Actuated Cycle Length (s)	70.0	Sum of lost time (s)	8.0
Intersection Capacity Utilization	52.5%	ICU Level of Service	A
Analysis Period (min)	15		
c Critical Lane Group			

Movement	EBL	EBT	EBR	WBL	WBT	WBR	NBL	NBT	NBR	SBL	SBT	SBR
Lane Configurations												
Sign Control		Stop			Stop			Stop			Stop	
Volume (vph)	0	69	22	14	126	86	21	38	15	1	2	4
Peak Hour Factor	0.92	0.92	0.92	0.92	0.92	0.92	0.92	0.92	0.92	0.92	0.92	0.92
Hourly flow rate (vph)	0	75	24	15	137	93	23	41	16	1	2	4

Direction, Lane #	EB 1	WB 1	NB 1	SB 1
Volume Total (vph)	99	246	80	8
Volume Left (vph)	0	15	23	1
Volume Right (vph)	24	93	16	4
Hadj (s)	-0.09	-0.16	-0.01	-0.26
Departure Headway (s)	4.3	4.1	4.6	4.5
Degree Utilization, x	0.12	0.28	0.10	0.01
Capacity (veh/h)	814	868	722	729
Control Delay (s)	7.8	8.6	8.2	7.5
Approach Delay (s)	7.8	8.6	8.2	7.5
Approach LOS	A	A	A	A

Intersection Summary			
Delay	8.3		
HCM Level of Service	A		
Intersection Capacity Utilization	41.4%	ICU Level of Service	A
Analysis Period (min)	15		

Movement	EBL	EBT	EBR	WBL	WBT	WBR	NBL	NBT	NBR	SBL	SBT	SBR
Lane Configurations												
Ideal Flow (vphpl)	1900	1900	1900	1900	1900	1900	1900	1900	1900	1900	1900	1900
Lane Width	12	12	12	12	12	12	12	8	12	12	12	12
Total Lost time (s)		4.0			4.0			4.0			4.0	
Lane Util. Factor		1.00			1.00			1.00			1.00	
Frpb, ped/bikes		0.99			0.95			0.99			1.00	
Flpb, ped/bikes		1.00			1.00			1.00			0.98	
Frt		0.99			0.92			0.99			0.99	
Flt Protected		1.00			1.00			1.00			0.98	
Satd. Flow (prot)		1300			1149			1116			1256	
Flt Permitted		0.99			0.98			0.98			0.84	
Satd. Flow (perm)		1287			1133			1094			1078	
Volume (vph)	4	49	4	11	41	80	13	117	14	53	58	6
Peak-hour factor, PHF	0.95	0.95	0.95	0.95	0.95	0.95	0.95	0.95	0.95	0.95	0.95	0.95
Adj. Flow (vph)	4	52	4	12	43	84	14	123	15	56	61	6
RTOR Reduction (vph)	0	2	0	0	49	0	0	8	0	0	3	0
Lane Group Flow (vph)	0	58	0	0	90	0	0	144	0	0	120	0
Confl. Peds. (#/hr)	50		50	50		50	50		50	50		50
Parking (#/hr)	20	20	20	20	20	20	20	20	20	20	20	20
Turn Type	Perm			Perm			Perm			Perm		
Protected Phases		4			8			2			6	
Permitted Phases	4			8			2			6		
Actuated Green, G (s)		20.0			20.0			20.0			20.0	
Effective Green, g (s)		21.0			21.0			21.0			21.0	
Actuated g/C Ratio		0.42			0.42			0.42			0.42	
Clearance Time (s)		5.0			5.0			5.0			5.0	
Lane Grp Cap (vph)		541			476			459			453	
v/s Ratio Prot												
v/s Ratio Perm		0.04			c0.08			c0.13			0.11	
v/c Ratio		0.11			0.19			0.31			0.26	
Uniform Delay, d1		8.8			9.1			9.7			9.5	
Progression Factor		1.00			1.00			1.00			1.00	
Incremental Delay, d2		0.4			0.9			1.8			1.4	
Delay (s)		9.2			10.0			11.5			10.9	
Level of Service		A			B			B			B	
Approach Delay (s)		9.2			10.0			11.5			10.9	
Approach LOS		A			B			B			B	

Intersection Summary			
HCM Average Control Delay	10.6	HCM Level of Service	B
HCM Volume to Capacity ratio	0.25		
Actuated Cycle Length (s)	50.0	Sum of lost time (s)	8.0
Intersection Capacity Utilization	45.8%	ICU Level of Service	A
Analysis Period (min)	15		
c Critical Lane Group			

Movement	EBL	EBT	EBR	WBL	WBT	WBR	NBL	NBT	NBR	SBL	SBT	SBR
Lane Configurations												
Ideal Flow (vphpl)	1900	1900	1900	1900	1900	1900	1900	1900	1900	1900	1900	1900
Lane Width	12	8	12	12	10	12	12	8	12	12	8	12
Total Lost time (s)		4.0			4.0			4.0			4.0	
Lane Util. Factor		1.00			1.00			1.00			1.00	
Frpb, ped/bikes		0.98			0.96			0.97			0.98	
Flpb, ped/bikes		0.99			0.99			0.99			0.97	
Frt		0.98			0.95			0.96			0.98	
Flt Protected		1.00			0.99			1.00			0.99	
Satd. Flow (prot)		1095			1118			1065			1061	
Flt Permitted		0.99			0.98			0.98			0.94	
Satd. Flow (perm)		1084			1104			1053			1015	
Volume (vph)	2	19	4	5	22	15	2	15	6	13	22	7
Peak-hour factor, PHF	0.79	0.79	0.79	0.79	0.79	0.79	0.79	0.79	0.79	0.79	0.79	0.79
Adj. Flow (vph)	3	24	5	6	28	19	3	19	8	16	28	9
RTOR Reduction (vph)	0	3	0	0	12	0	0	5	0	0	5	0
Lane Group Flow (vph)	0	29	0	0	42	0	0	25	0	0	48	0
Confl. Peds. (#/hr)	50		50	50		50	50		50	50		50
Parking (#/hr)	20	20	20	20	20	20	20	20	20	20	20	20
Turn Type	Perm			Perm			Perm			Perm		
Protected Phases		4			8			2			6	
Permitted Phases	4			8			2			6		
Actuated Green, G (s)		15.0			15.0			15.0			15.0	
Effective Green, g (s)		15.0			15.0			15.0			15.0	
Actuated g/C Ratio		0.39			0.39			0.39			0.39	
Clearance Time (s)		4.0			4.0			4.0			4.0	
Lane Grp Cap (vph)		428			436			416			401	
v/s Ratio Prot												
v/s Ratio Perm		0.03			c0.04			0.02			c0.05	
v/c Ratio		0.07			0.10			0.06			0.12	
Uniform Delay, d1		7.2			7.2			7.1			7.3	
Progression Factor		1.00			1.00			1.00			1.00	
Incremental Delay, d2		0.3			0.4			0.3			0.6	
Delay (s)		7.5			7.7			7.4			7.9	
Level of Service		A			A			A			A	
Approach Delay (s)		7.5			7.7			7.4			7.9	
Approach LOS		A			A			A			A	

Intersection Summary			
HCM Average Control Delay	7.7	HCM Level of Service	A
HCM Volume to Capacity ratio	0.11		
Actuated Cycle Length (s)	38.0	Sum of lost time (s)	8.0
Intersection Capacity Utilization	25.0%	ICU Level of Service	A
Analysis Period (min)	15		
c Critical Lane Group			

Movement	WBL	WBR	NBT	NBR	SBL	SBT
Lane Configurations						
Sign Control	Stop		Stop			Stop
Volume (vph)	1	24	1	1	11	1
Peak Hour Factor	0.92	0.92	0.92	0.92	0.92	0.92
Hourly flow rate (vph)	1	26	1	1	12	1

Direction, Lane #	NB 1	SB 1
Volume Total (vph)	2	13
Volume Left (vph)	0	12
Volume Right (vph)	1	0
Hadj (s)	-0.25	0.23
Departure Headway (s)	3.7	4.1
Degree Utilization, x	0.00	0.01
Capacity (veh/h)	978	865
Control Delay (s)	6.7	7.2
Approach Delay (s)	6.7	7.2
Approach LOS	A	A

Intersection Summary			
Delay	Err		
HCM Level of Service	F		
Intersection Capacity Utilization	Err%	ICU Level of Service	H
Analysis Period (min)	15		

Movement	EBL	EBT	EBR	WBL	WBT	WBR	NBL	NBT	NBR	SBL	SBT	SBR
Lane Configurations												
Sign Control		Stop			Stop			Free			Free	
Grade		0%			0%			0%			0%	
Volume (veh/h)	2	26	2	53	7	20	18	154	18	12	93	11
Peak Hour Factor	0.92	0.92	0.92	0.92	0.92	0.92	0.92	0.92	0.92	0.92	0.92	0.92
Hourly flow rate (vph)	2	28	2	58	8	22	20	167	20	13	101	12
Pedestrians		50			50			50			50	
Lane Width (ft)		12.0			12.0			11.0			11.0	
Walking Speed (ft/s)		4.0			4.0			4.0			4.0	
Percent Blockage		4			4			4			4	
Right turn flare (veh)												
Median type		None			None							
Median storage veh)												
Upstream signal (ft)								1212			443	
pX, platoon unblocked												
vC, conflicting volume	475	459	207	466	455	277	163			237		
vC1, stage 1 conf vol												
vC2, stage 2 conf vol												
vCu, unblocked vol	475	459	207	466	455	277	163			237		
tC, single (s)	7.1	6.5	6.2	7.1	6.5	6.2	4.1			4.1		
tC, 2 stage (s)												
tF (s)	3.5	4.0	3.3	3.5	4.0	3.3	2.2			2.2		
p0 queue free %	99	94	100	86	98	97	99			99		
cM capacity (veh/h)	404	445	766	407	447	700	1351			1269		

Direction, Lane #	EB 1	WB 1	NB 1	SB 1
Volume Total	33	87	207	126
Volume Left	2	58	20	13
Volume Right	2	22	20	12
cSH	455	459	1351	1269
Volume to Capacity	0.07	0.19	0.01	0.01
Queue Length 95th (ft)	6	17	1	1
Control Delay (s)	13.5	14.7	0.8	0.9
Lane LOS	B	B	A	A
Approach Delay (s)	13.5	14.7	0.8	0.9
Approach LOS	B	B		

Intersection Summary			
Average Delay	4.4		
Intersection Capacity Utilization	34.9%	ICU Level of Service	A
Analysis Period (min)	15		

Movement	EBL	EBT	EBR	WBL	WBT	WBR	NBL	NBT	NBR	SBL	SBT	SBR
Lane Configurations												
Sign Control		Stop			Stop			Stop			Stop	
Volume (vph)	20	18	9	5	20	12	11	22	3	9	8	30
Peak Hour Factor	0.89	0.89	0.89	0.89	0.89	0.89	0.89	0.89	0.89	0.89	0.89	0.89
Hourly flow rate (vph)	22	20	10	6	22	13	12	25	3	10	9	34

Direction, Lane #	EB 1	WB 1	NB 1	SB 1
Volume Total (vph)	53	42	40	53
Volume Left (vph)	22	6	12	10
Volume Right (vph)	10	13	3	34
Hadj (s)	0.02	-0.12	0.06	-0.29
Departure Headway (s)	4.2	4.0	4.2	3.9
Degree Utilization, x	0.06	0.05	0.05	0.06
Capacity (veh/h)	841	866	823	907
Control Delay (s)	7.4	7.2	7.4	7.1
Approach Delay (s)	7.4	7.2	7.4	7.1
Approach LOS	A	A	A	A

Intersection Summary			
Delay	7.3		
HCM Level of Service	A		
Intersection Capacity Utilization	30.9%	ICU Level of Service	A
Analysis Period (min)	15		

Movement	EBL	EBT	EBR	WBL	WBT	WBR	NBL	NBT	NBR	SBL	SBT	SBR
Lane Configurations												
Sign Control		Free			Free			Stop			Stop	
Grade		0%			0%			0%			0%	
Volume (veh/h)	1	1	9	4	14	18	9	19	5	13	10	1
Peak Hour Factor	0.84	0.84	0.84	0.84	0.84	0.84	0.84	0.84	0.84	0.84	0.84	0.84
Hourly flow rate (vph)	1	1	11	5	17	21	11	23	6	15	12	1
Pedestrians		50			50			50			50	
Lane Width (ft)		9.0			10.0			8.0			9.0	
Walking Speed (ft/s)		4.0			4.0			4.0			4.0	
Percent Blockage		3			3			3			3	
Right turn flare (veh)												
Median type								None			None	
Median storage veh)												
Upstream signal (ft)					452							
pX, platoon unblocked												
vC, conflicting volume	88			62			153	157	107	163	151	127
vC1, stage 1 conf vol												
vC2, stage 2 conf vol												
vCu, unblocked vol	88			62			153	157	107	163	151	127
tC, single (s)	4.1			4.1			7.1	6.5	6.2	7.1	6.5	6.2
tC, 2 stage (s)												
tF (s)	2.2			2.2			3.5	4.0	3.3	3.5	4.0	3.3
p0 queue free %	100			100			99	97	99	98	98	100
cM capacity (veh/h)	1454			1492			718	688	887	690	693	863

Direction, Lane #	EB 1	WB 1	NB 1	SB 1
Volume Total	13	43	39	29
Volume Left	1	5	11	15
Volume Right	11	21	6	1
cSH	1454	1492	721	697
Volume to Capacity	0.00	0.00	0.05	0.04
Queue Length 95th (ft)	0	0	4	3
Control Delay (s)	0.7	0.8	10.3	10.4
Lane LOS	A	A	B	B
Approach Delay (s)	0.7	0.8	10.3	10.4
Approach LOS			B	B

Intersection Summary			
Average Delay	6.0		
Intersection Capacity Utilization	29.9%	ICU Level of Service	A
Analysis Period (min)	15		

Movement	EBT	EBR	WBL	WBT	NBL	NBR
Lane Configurations						
Sign Control	Free			Free	Stop	
Grade	0%			0%	0%	
Volume (veh/h)	1	1	13	1	1	6
Peak Hour Factor	0.92	0.92	0.92	0.92	0.92	0.92
Hourly flow rate (vph)	1	1	14	1	1	7
Pedestrians	50			50	50	
Lane Width (ft)	12.0			9.0	12.0	
Walking Speed (ft/s)	4.0			4.0	4.0	
Percent Blockage	4			3	4	
Right turn flare (veh)						
Median type					None	
Median storage veh)						
Upstream signal (ft)						
pX, platoon unblocked						
vC, conflicting volume			52		131	102
vC1, stage 1 conf vol						
vC2, stage 2 conf vol						
vCu, unblocked vol			52		131	102
tC, single (s)			4.1		6.4	6.2
tC, 2 stage (s)						
tF (s)			2.2		3.5	3.3
p0 queue free %			99		100	99
cM capacity (veh/h)			1483		783	883

Direction, Lane #	EB 1	WB 1	NB 1
Volume Total	2	15	8
Volume Left	0	14	1
Volume Right	1	0	7
cSH	1700	1483	867
Volume to Capacity	0.00	0.01	0.01
Queue Length 95th (ft)	0	1	1
Control Delay (s)	0.0	6.9	9.2
Lane LOS		A	A
Approach Delay (s)	0.0	6.9	9.2
Approach LOS			A

Intersection Summary			
Average Delay	7.0		
Intersection Capacity Utilization	29.7%	ICU Level of Service	A
Analysis Period (min)	15		

Movement	EBL	EBT	EBR	WBL	WBT	WBR	NBL	NBT	NBR	SBL	SBT	SBR
Lane Configurations												
Sign Control		Free			Free			Stop			Stop	
Grade		0%			0%			0%			0%	
Volume (veh/h)	6	26	8	0	0	0	0	26	6	6	28	0
Peak Hour Factor	0.68	0.68	0.68	0.68	0.68	0.68	0.68	0.68	0.68	0.68	0.68	0.68
Hourly flow rate (vph)	9	38	12	0	0	0	0	38	9	9	41	0
Pedestrians		50			50			50			50	
Lane Width (ft)		11.0			0.0			9.0			11.0	
Walking Speed (ft/s)		4.0			4.0			4.0			4.0	
Percent Blockage		4			0			3			4	
Right turn flare (veh)												
Median type								None			None	
Median storage veh)												
Upstream signal (ft)												
pX, platoon unblocked												
vC, conflicting volume	50			100			182	162	144	190	168	100
vC1, stage 1 conf vol												
vC2, stage 2 conf vol												
vCu, unblocked vol	50			100			182	162	144	190	168	100
tC, single (s)	4.1			4.1			7.1	6.5	6.2	7.1	6.5	6.2
tC, 2 stage (s)												
tF (s)	2.2			2.2			3.5	4.0	3.3	3.5	4.0	3.3
p0 queue free %	99			100			100	94	99	99	94	100
cM capacity (veh/h)	1491			1440			651	675	872	661	670	881

Direction, Lane #	EB 1	NB 1	SB 1
Volume Total	59	47	50
Volume Left	9	0	9
Volume Right	12	9	0
cSH	1491	705	668
Volume to Capacity	0.01	0.07	0.07
Queue Length 95th (ft)	0	5	6
Control Delay (s)	1.2	10.5	10.8
Lane LOS	A	B	B
Approach Delay (s)	1.2	10.5	10.8
Approach LOS		B	B

Intersection Summary			
Average Delay	7.1		
Intersection Capacity Utilization	31.3%	ICU Level of Service	A
Analysis Period (min)	15		

Movement	EBL	EBT	EBR	WBL	WBT	WBR	NBL	NBT	NBR	SBL	SBT	SBR
Lane Configurations												
Sign Control		Stop			Stop			Stop			Stop	
Volume (vph)	6	8	7	0	0	0	9	15	11	10	24	9
Peak Hour Factor	0.92	0.92	0.92	0.92	0.92	0.92	0.92	0.92	0.92	0.92	0.92	0.92
Hourly flow rate (vph)	7	9	8	0	0	0	10	16	12	11	26	10

Direction, Lane #	EB 1	NB 1	SB 1
Volume Total (vph)	23	38	47
Volume Left (vph)	7	10	11
Volume Right (vph)	8	12	10
Hadj (s)	-0.09	-0.09	-0.03
Departure Headway (s)	4.0	3.9	4.0
Degree Utilization, x	0.03	0.04	0.05
Capacity (veh/h)	879	902	899
Control Delay (s)	7.1	7.1	7.2
Approach Delay (s)	7.1	7.1	7.2
Approach LOS	A	A	A

Intersection Summary			
Delay		7.1	
HCM Level of Service		A	
Intersection Capacity Utilization		30.7%	ICU Level of Service A
Analysis Period (min)		15	

Movement	WBL	WBR	NBT	NBR	SBL	SBT
Lane Configurations						
Sign Control	Stop		Free			Free
Grade	0%		0%			0%
Volume (veh/h)	9	7	2	13	2	2
Peak Hour Factor	0.92	0.92	0.92	0.92	0.92	0.92
Hourly flow rate (vph)	10	8	2	14	2	2
Pedestrians	50		50			50
Lane Width (ft)	9.0		8.0			8.0
Walking Speed (ft/s)	4.0		4.0			4.0
Percent Blockage	3		3			3
Right turn flare (veh)						
Median type	None					
Median storage veh)						
Upstream signal (ft)						
pX, platoon unblocked						
vC, conflicting volume	116	109			66	
vC1, stage 1 conf vol						
vC2, stage 2 conf vol						
vCu, unblocked vol	116	109			66	
tC, single (s)	6.4	6.2			4.1	
tC, 2 stage (s)						
tF (s)	3.5	3.3			2.2	
p0 queue free %	99	99			100	
cM capacity (veh/h)	826	887			1481	

Direction, Lane #	WB 1	NB 1	SB 1
Volume Total	17	16	4
Volume Left	10	0	2
Volume Right	8	14	0
cSH	851	1700	1481
Volume to Capacity	0.02	0.01	0.00
Queue Length 95th (ft)	2	0	0
Control Delay (s)	9.3	0.0	3.7
Lane LOS	A		A
Approach Delay (s)	9.3	0.0	3.7
Approach LOS	A		

Intersection Summary			
Average Delay	4.7		
Intersection Capacity Utilization	29.8%	ICU Level of Service	A
Analysis Period (min)	15		

Movement	EBL	EBT	EBR	WBL	WBT	WBR	NBL	NBT	NBR	SBL	SBT	SBR
Lane Configurations												
Sign Control		Stop			Stop			Free			Free	
Grade		0%			0%			0%			0%	
Volume (veh/h)	10	14	16	0	0	0	0	199	6	10	93	0
Peak Hour Factor	0.93	0.93	0.93	0.93	0.93	0.93	0.93	0.93	0.93	0.93	0.93	0.93
Hourly flow rate (vph)	11	15	17	0	0	0	0	214	6	11	100	0
Pedestrians		50			50			50			50	
Lane Width (ft)		8.0			0.0			11.0			11.0	
Walking Speed (ft/s)		4.0			4.0			4.0			4.0	
Percent Blockage		3			0			4			4	
Right turn flare (veh)												
Median type		None			None							
Median storage veh)												
Upstream signal (ft)								398			1257	
pX, platoon unblocked												
vC, conflicting volume	439	442	200	463	439	317	150			270		
vC1, stage 1 conf vol												
vC2, stage 2 conf vol												
vCu, unblocked vol	439	442	200	463	439	317	150			270		
tC, single (s)	7.1	6.5	6.2	7.1	6.5	6.2	4.1			4.1		
tC, 2 stage (s)												
tF (s)	3.5	4.0	3.3	3.5	4.0	3.3	2.2			2.2		
p0 queue free %	98	97	98	100	100	100	100			99		
cM capacity (veh/h)	479	490	784	453	492	693	1386			1287		

Direction, Lane #	EB 1	NB 1	SB 1
Volume Total	43	220	111
Volume Left	11	0	11
Volume Right	17	6	0
cSH	573	1700	1287
Volume to Capacity	0.08	0.13	0.01
Queue Length 95th (ft)	6	0	1
Control Delay (s)	11.8	0.0	0.8
Lane LOS	B		A
Approach Delay (s)	11.8	0.0	0.8
Approach LOS	B		

Intersection Summary			
Average Delay	1.6		
Intersection Capacity Utilization	34.2%	ICU Level of Service	A
Analysis Period (min)	15		

Movement	EBL	EBT	EBR	WBL	WBT	WBR	NBL	NBT	NBR	SBL	SBT	SBR
Lane Configurations												
Sign Control		Stop			Stop			Free			Free	
Grade		0%			0%			0%			0%	
Volume (veh/h)	0	0	0	6	15	6	17	184	0	0	137	16
Peak Hour Factor	0.89	0.89	0.89	0.89	0.89	0.89	0.89	0.89	0.89	0.89	0.89	0.89
Hourly flow rate (vph)	0	0	0	7	17	7	19	207	0	0	154	18
Pedestrians		50			50			50			50	
Lane Width (ft)		0.0			12.0			11.0			11.0	
Walking Speed (ft/s)		4.0			4.0			4.0			4.0	
Percent Blockage		0			4			4			4	
Right turn flare (veh)												
Median type		None			None							
Median storage veh)												
Upstream signal (ft)								795			860	
pX, platoon unblocked												
vC, conflicting volume	523	508	263	508	517	307	222			257		
vC1, stage 1 conf vol												
vC2, stage 2 conf vol												
vCu, unblocked vol	523	508	263	508	517	307	222			257		
tC, single (s)	7.1	6.5	6.2	7.1	6.5	6.2	4.1			4.1		
tC, 2 stage (s)												
tF (s)	3.5	4.0	3.3	3.5	4.0	3.3	2.2			2.2		
p0 queue free %	100	100	100	98	96	99	99			100		
cM capacity (veh/h)	410	441	744	418	435	674	1341			1248		

Direction, Lane #	WB 1	NB 1	SB 1
Volume Total	30	226	172
Volume Left	7	19	0
Volume Right	7	0	18
cSH	468	1341	1248
Volume to Capacity	0.06	0.01	0.00
Queue Length 95th (ft)	5	1	0
Control Delay (s)	13.2	0.8	0.0
Lane LOS	B	A	
Approach Delay (s)	13.2	0.8	0.0
Approach LOS	B		

Intersection Summary			
Average Delay	1.3		
Intersection Capacity Utilization	45.4%	ICU Level of Service	A
Analysis Period (min)	15		

Movement	EBL	EBT	EBR	WBL	WBT	WBR	NBL	NBT	NBR	SBL	SBT	SBR
Lane Configurations												
Ideal Flow (vphpl)	1900	1900	1900	1900	1900	1900	1900	1900	1900	1900	1900	1900
Lane Width	12	12	12	12	11	12	12	9	12	12	9	12
Total Lost time (s)					4.0			4.0			4.0	
Lane Util. Factor					1.00			1.00			1.00	
Frpb, ped/bikes					0.96			1.00			0.99	
Flpb, ped/bikes					0.99			0.99			1.00	
Frt					0.95			1.00			0.98	
Flt Protected					1.00			0.99			1.00	
Satd. Flow (prot)					1156			1172			1164	
Flt Permitted					1.00			0.98			1.00	
Satd. Flow (perm)					1156			1154			1164	
Volume (vph)	0	0	0	2	12	9	4	21	0	0	36	5
Peak-hour factor, PHF	0.77	0.77	0.77	0.77	0.77	0.77	0.77	0.77	0.77	0.77	0.77	0.77
Adj. Flow (vph)	0	0	0	3	16	12	5	27	0	0	47	6
RTOR Reduction (vph)	0	0	0	0	7	0	0	0	0	0	4	0
Lane Group Flow (vph)	0	0	0	0	24	0	0	32	0	0	50	0
Confl. Peds. (#/hr)	50		50	50		50	50		50	50		50
Parking (#/hr)	20	20	20	20	20	20	20	20	20	20	20	20
Turn Type				Perm			Perm					
Protected Phases					8			2			6	
Permitted Phases				8			2					
Actuated Green, G (s)					20.0			20.0			20.0	
Effective Green, g (s)					20.0			20.0			20.0	
Actuated g/C Ratio					0.42			0.42			0.42	
Clearance Time (s)					4.0			4.0			4.0	
Vehicle Extension (s)					3.0			3.0			3.0	
Lane Grp Cap (vph)					482			481			485	
v/s Ratio Prot											c0.04	
v/s Ratio Perm					0.02			0.03				
v/c Ratio					0.05			0.07			0.10	
Uniform Delay, d1					8.3			8.4			8.5	
Progression Factor					1.00			1.00			1.00	
Incremental Delay, d2					0.2			0.3			0.4	
Delay (s)					8.5			8.7			9.0	
Level of Service					A			A			A	
Approach Delay (s)		0.0			8.5			8.7			9.0	
Approach LOS		A			A			A			A	

Intersection Summary			
HCM Average Control Delay	8.8	HCM Level of Service	A
HCM Volume to Capacity ratio	0.08		
Actuated Cycle Length (s)	48.0	Sum of lost time (s)	8.0
Intersection Capacity Utilization	31.7%	ICU Level of Service	A
Analysis Period (min)	15		

c Critical Lane Group

Movement	EBL	EBT	EBR	WBL	WBT	WBR	NBL	NBT	NBR	SBL	SBT	SBR
Lane Configurations												
Sign Control		Stop			Stop			Stop			Stop	
Volume (vph)	9	0	4	20	1	7	1	15	0	0	7	2
Peak Hour Factor	0.83	0.83	0.83	0.83	0.83	0.83	0.83	0.83	0.83	0.83	0.83	0.83
Hourly flow rate (vph)	11	0	5	24	1	8	1	18	0	0	8	2

Direction, Lane #	EB 1	EB 2	WB 1	NB 1	SB 1
Volume Total (vph)	11	5	34	19	11
Volume Left (vph)	11	0	24	1	0
Volume Right (vph)	0	5	8	0	2
Hadj (s)	0.55	-0.65	0.04	0.06	-0.08
Departure Headway (s)	5.1	3.9	4.1	4.1	3.9
Degree Utilization, x	0.02	0.01	0.04	0.02	0.01
Capacity (veh/h)	691	903	861	859	895
Control Delay (s)	7.0	5.8	7.3	7.2	7.0
Approach Delay (s)	6.6		7.3	7.2	7.0
Approach LOS	A		A	A	A

Intersection Summary			
Delay	7.1		
HCM Level of Service	A		
Intersection Capacity Utilization	44.5%	ICU Level of Service	A
Analysis Period (min)	15		

Movement	WBL	WBR	NBT	NBR	SBL	SBT
Lane Configurations						
Sign Control	Stop		Free			Free
Grade	0%		0%			0%
Volume (veh/h)	1	4	1	12	1	1
Peak Hour Factor	0.92	0.92	0.92	0.92	0.92	0.92
Hourly flow rate (vph)	1	4	1	13	1	1
Pedestrians	50		50			50
Lane Width (ft)	9.0		8.0			8.0
Walking Speed (ft/s)	4.0		4.0			4.0
Percent Blockage	3		3			3
Right turn flare (veh)						
Median type	None					
Median storage veh)						
Upstream signal (ft)						
pX, platoon unblocked						
vC, conflicting volume	111	108			64	
vC1, stage 1 conf vol						
vC2, stage 2 conf vol						
vCu, unblocked vol	111	108			64	
tC, single (s)	6.4	6.2			4.1	
tC, 2 stage (s)						
tF (s)	3.5	3.3			2.2	
p0 queue free %	100	100			100	
cM capacity (veh/h)	832	889			1484	

Direction, Lane #	WB 1	NB 1	SB 1
Volume Total	5	14	2
Volume Left	1	0	1
Volume Right	4	13	0
cSH	877	1700	1484
Volume to Capacity	0.01	0.01	0.00
Queue Length 95th (ft)	0	0	0
Control Delay (s)	9.1	0.0	3.7
Lane LOS	A		A
Approach Delay (s)	9.1	0.0	3.7
Approach LOS	A		

Intersection Summary			
Average Delay	2.7		
Intersection Capacity Utilization	29.8%	ICU Level of Service	A
Analysis Period (min)	15		

Existing PM LOS

ATEC
Advanced Transportation
Engineering Consultants

Movement	EBL	EBT	EBR	WBL	WBT	WBR	NBL	NBT	NBR	SBL	SBT	SBR
Lane Configurations												
Ideal Flow (vphpl)	1900	1900	1900	1900	1900	1900	1900	1900	1900	1900	1900	1900
Lane Width	12	12	12	12	12	12	12	11	12	12	11	12
Total Lost time (s)	4.0		4.0		4.0			4.0			4.0	
Lane Util. Factor	1.00		1.00		1.00			1.00			1.00	
Frpb, ped/bikes	1.00		0.88		0.96			1.00			0.97	
Flpb, ped/bikes	0.93		1.00		0.97			0.99			1.00	
Frt	1.00		0.85		0.95			1.00			0.97	
Flt Protected	0.95		1.00		0.98			0.99			1.00	
Satd. Flow (prot)	1170		992		1159			1262			1209	
Flt Permitted	0.65		1.00		0.98			0.95			1.00	
Satd. Flow (perm)	799		992		1159			1213			1209	
Volume (vph)	113	0	55	48	55	53	23	150	0	0	132	40
Peak-hour factor, PHF	0.92	0.92	0.92	0.92	0.92	0.92	0.92	0.92	0.92	0.92	0.92	0.92
Adj. Flow (vph)	123	0	60	52	60	58	25	163	0	0	143	43
RTOR Reduction (vph)	0	0	38	0	26	0	0	0	0	0	16	0
Lane Group Flow (vph)	123	0	22	0	144	0	0	188	0	0	170	0
Confl. Peds. (#/hr)	50		50	50		50	50		50	50		50
Parking (#/hr)	20	20	20	20	20	20	20	20		20	20	20
Turn Type	custom		custom	Perm			Perm					
Protected Phases					8			2			6	
Permitted Phases	4		4	8			2					
Actuated Green, G (s)	25.0		25.0		25.0			35.0			35.0	
Effective Green, g (s)	26.0		26.0		26.0			36.0			36.0	
Actuated g/C Ratio	0.37		0.37		0.37			0.51			0.51	
Clearance Time (s)	5.0		5.0		5.0			5.0			5.0	
Lane Grp Cap (vph)	297		368		430			624			622	
v/s Ratio Prot											0.14	
v/s Ratio Perm	c0.15		0.02		0.12			c0.15				
v/c Ratio	0.41		0.06		0.33			0.30			0.27	
Uniform Delay, d1	16.3		14.1		15.8			9.8			9.6	
Progression Factor	1.00		1.00		1.00			1.00			1.00	
Incremental Delay, d2	4.2		0.3		2.1			1.2			1.1	
Delay (s)	20.6		14.5		17.9			11.0			10.7	
Level of Service	C		B		B			B			B	
Approach Delay (s)		18.6			17.9			11.0			10.7	
Approach LOS		B			B			B			B	

Intersection Summary			
HCM Average Control Delay	14.4	HCM Level of Service	B
HCM Volume to Capacity ratio	0.35		
Actuated Cycle Length (s)	70.0	Sum of lost time (s)	8.0
Intersection Capacity Utilization	54.8%	ICU Level of Service	A
Analysis Period (min)	15		
c Critical Lane Group			

Movement	EBL	EBT	EBR	WBL	WBT	WBR	NBL	NBT	NBR	SBL	SBT	SBR
Lane Configurations												
Sign Control		Stop			Stop			Stop			Stop	
Volume (vph)	1	97	39	7	66	45	15	25	10	2	2	2
Peak Hour Factor	0.92	0.92	0.92	0.92	0.92	0.92	0.92	0.92	0.92	0.92	0.92	0.92
Hourly flow rate (vph)	1	105	42	8	72	49	16	27	11	2	2	2

Direction, Lane #	EB 1	WB 1	NB 1	SB 1
Volume Total (vph)	149	128	54	7
Volume Left (vph)	1	8	16	2
Volume Right (vph)	42	49	11	2
Hadj (s)	-0.12	-0.17	-0.01	-0.08
Departure Headway (s)	4.1	4.0	4.5	4.5
Degree Utilization, x	0.17	0.14	0.07	0.01
Capacity (veh/h)	868	874	751	742
Control Delay (s)	7.9	7.7	7.8	7.5
Approach Delay (s)	7.9	7.7	7.8	7.5
Approach LOS	A	A	A	A

Intersection Summary			
Delay	7.8		
HCM Level of Service	A		
Intersection Capacity Utilization	32.4%	ICU Level of Service	A
Analysis Period (min)	15		

Movement	EBL	EBT	EBR	WBL	WBT	WBR	NBL	NBT	NBR	SBL	SBT	SBR
Lane Configurations												
Ideal Flow (vphpl)	1900	1900	1900	1900	1900	1900	1900	1900	1900	1900	1900	1900
Lane Width	12	12	12	12	12	12	12	8	12	12	12	12
Total Lost time (s)		4.0			4.0			4.0			4.0	
Lane Util. Factor		1.00			1.00			1.00			1.00	
Frpb, ped/bikes		0.99			0.96			0.99			0.99	
Flpb, ped/bikes		0.99			1.00			1.00			0.98	
Frt		0.98			0.94			0.98			0.99	
Flt Protected		0.99			1.00			0.99			0.98	
Satd. Flow (prot)		1266			1191			1102			1258	
Flt Permitted		0.96			0.98			0.93			0.81	
Satd. Flow (perm)		1227			1176			1033			1040	
Volume (vph)	11	57	13	10	71	69	24	126	26	133	167	22
Peak-hour factor, PHF	0.92	0.92	0.92	0.92	0.92	0.92	0.92	0.92	0.92	0.92	0.92	0.92
Adj. Flow (vph)	12	62	14	11	77	75	26	137	28	145	182	24
RTOR Reduction (vph)	0	8	0	0	44	0	0	12	0	0	5	0
Lane Group Flow (vph)	0	80	0	0	120	0	0	179	0	0	346	0
Confl. Peds. (#/hr)	50		50	50		50	50		50	50		50
Parking (#/hr)	20	20	20	20	20	20	20	20	20	20	20	20
Turn Type	Perm			Perm			Perm			Perm		
Protected Phases		4			8			2			6	
Permitted Phases	4			8			2			6		
Actuated Green, G (s)		20.0			20.0			20.0			20.0	
Effective Green, g (s)		21.0			21.0			21.0			21.0	
Actuated g/C Ratio		0.42			0.42			0.42			0.42	
Clearance Time (s)		5.0			5.0			5.0			5.0	
Lane Grp Cap (vph)		515			494			434			437	
v/s Ratio Prot												
v/s Ratio Perm		0.07			c0.10			0.17			c0.33	
v/c Ratio		0.16			0.24			0.41			0.79	
Uniform Delay, d1		9.0			9.4			10.2			12.6	
Progression Factor		1.00			1.00			1.00			1.00	
Incremental Delay, d2		0.6			1.2			2.9			13.6	
Delay (s)		9.6			10.5			13.0			26.2	
Level of Service		A			B			B			C	
Approach Delay (s)		9.6			10.5			13.0			26.2	
Approach LOS		A			B			B			C	

Intersection Summary			
HCM Average Control Delay	18.0	HCM Level of Service	B
HCM Volume to Capacity ratio	0.52		
Actuated Cycle Length (s)	50.0	Sum of lost time (s)	8.0
Intersection Capacity Utilization	63.0%	ICU Level of Service	B
Analysis Period (min)	15		
c Critical Lane Group			

Movement	EBL	EBT	EBR	WBL	WBT	WBR	NBL	NBT	NBR	SBL	SBT	SBR
Lane Configurations												
Ideal Flow (vphpl)	1900	1900	1900	1900	1900	1900	1900	1900	1900	1900	1900	1900
Lane Width	12	8	12	12	10	12	12	8	12	12	8	12
Total Lost time (s)		4.0			4.0			4.0			4.0	
Lane Util. Factor		1.00			1.00			1.00			1.00	
Frpb, ped/bikes		0.98			0.96			0.96			0.99	
Flpb, ped/bikes		0.99			0.99			0.99			0.98	
Frt		0.97			0.95			0.95			0.99	
Flt Protected		0.99			0.99			1.00			0.99	
Satd. Flow (prot)		1068			1120			1039			1092	
Flt Permitted		0.97			0.98			0.98			0.94	
Satd. Flow (perm)		1044			1100			1026			1036	
Volume (vph)	4	13	5	12	46	30	4	21	14	21	45	4
Peak-hour factor, PHF	0.96	0.96	0.96	0.96	0.96	0.96	0.96	0.96	0.96	0.96	0.96	0.96
Adj. Flow (vph)	4	14	5	12	48	31	4	22	15	22	47	4
RTOR Reduction (vph)	0	3	0	0	19	0	0	9	0	0	2	0
Lane Group Flow (vph)	0	20	0	0	72	0	0	32	0	0	71	0
Confl. Peds. (#/hr)	50		50	50		50	50		50	50		50
Parking (#/hr)	20	20	20	20	20	20	20	20	20	20	20	20
Turn Type	Perm			Perm			Perm			Perm		
Protected Phases		4			8			2			6	
Permitted Phases	4			8			2			6		
Actuated Green, G (s)		15.0			15.0			15.0			15.0	
Effective Green, g (s)		15.0			15.0			15.0			15.0	
Actuated g/C Ratio		0.39			0.39			0.39			0.39	
Clearance Time (s)		4.0			4.0			4.0			4.0	
Lane Grp Cap (vph)		412			434			405			409	
v/s Ratio Prot												
v/s Ratio Perm		0.02			c0.07			0.03			c0.07	
v/c Ratio		0.05			0.17			0.08			0.17	
Uniform Delay, d1		7.1			7.5			7.2			7.5	
Progression Factor		1.00			1.00			1.00			1.00	
Incremental Delay, d2		0.2			0.8			0.4			0.9	
Delay (s)		7.3			8.3			7.6			8.4	
Level of Service		A			A			A			A	
Approach Delay (s)		7.3			8.3			7.6			8.4	
Approach LOS		A			A			A			A	

Intersection Summary			
HCM Average Control Delay	8.1	HCM Level of Service	A
HCM Volume to Capacity ratio	0.17		
Actuated Cycle Length (s)	38.0	Sum of lost time (s)	8.0
Intersection Capacity Utilization	25.1%	ICU Level of Service	A
Analysis Period (min)	15		
c Critical Lane Group			

Movement	WBL	WBR	NBT	NBR	SBL	SBT
Lane Configurations						
Sign Control	Stop		Stop			Stop
Volume (vph)	1	45	1	1	20	1
Peak Hour Factor	0.92	0.92	0.92	0.92	0.92	0.92
Hourly flow rate (vph)	1	49	1	1	22	1

Direction, Lane #	NB 1	SB 1
Volume Total (vph)	2	23
Volume Left (vph)	0	22
Volume Right (vph)	1	0
Hadj (s)	-0.25	0.24
Departure Headway (s)	3.7	4.1
Degree Utilization, x	0.00	0.03
Capacity (veh/h)	975	864
Control Delay (s)	6.7	7.3
Approach Delay (s)	6.7	7.3
Approach LOS	A	A

Intersection Summary			
Delay	Err		
HCM Level of Service	F		
Intersection Capacity Utilization	Err%	ICU Level of Service	H
Analysis Period (min)	15		

Movement	EBL	EBT	EBR	WBL	WBT	WBR	NBL	NBT	NBR	SBL	SBT	SBR
Lane Configurations												
Sign Control		Stop			Stop			Free			Free	
Grade		0%			0%			0%			0%	
Volume (veh/h)	8	62	8	33	5	12	18	159	18	24	188	24
Peak Hour Factor	0.92	0.92	0.92	0.92	0.92	0.92	0.92	0.92	0.92	0.92	0.92	0.92
Hourly flow rate (vph)	9	67	9	36	5	13	20	173	20	26	204	26
Pedestrians		50			50			50			50	
Lane Width (ft)		12.0			12.0			11.0			11.0	
Walking Speed (ft/s)		4.0			4.0			4.0			4.0	
Percent Blockage		4			4			4			4	
Right turn flare (veh)												
Median type		None			None							
Median storage veh)												
Upstream signal (ft)								1212			443	
pX, platoon unblocked												
vC, conflicting volume	607	601	317	634	604	283	280			242		
vC1, stage 1 conf vol												
vC2, stage 2 conf vol												
vCu, unblocked vol	607	601	317	634	604	283	280			242		
tC, single (s)	7.1	6.5	6.2	7.1	6.5	6.2	4.1			4.1		
tC, 2 stage (s)												
tF (s)	3.5	4.0	3.3	3.5	4.0	3.3	2.2			2.2		
p0 queue free %	97	82	99	87	99	98	98			98		
cM capacity (veh/h)	332	365	664	279	364	695	1223			1263		

Direction, Lane #	EB 1	WB 1	NB 1	SB 1
Volume Total	85	54	212	257
Volume Left	9	36	20	26
Volume Right	9	13	20	26
cSH	379	335	1223	1263
Volume to Capacity	0.22	0.16	0.02	0.02
Queue Length 95th (ft)	21	14	1	2
Control Delay (s)	17.2	17.8	0.9	1.0
Lane LOS	C	C	A	A
Approach Delay (s)	17.2	17.8	0.9	1.0
Approach LOS	C	C		

Intersection Summary			
Average Delay	4.7		
Intersection Capacity Utilization	39.0%	ICU Level of Service	A
Analysis Period (min)	15		

Movement	EBL	EBT	EBR	WBL	WBT	WBR	NBL	NBT	NBR	SBL	SBT	SBR
Lane Configurations												
Sign Control		Stop			Stop			Stop			Stop	
Volume (vph)	11	35	15	8	26	14	1	25	8	41	53	14
Peak Hour Factor	0.85	0.85	0.85	0.85	0.85	0.85	0.85	0.85	0.85	0.85	0.85	0.85
Hourly flow rate (vph)	13	41	18	9	31	16	1	29	9	48	62	16

Direction, Lane #	EB 1	WB 1	NB 1	SB 1
Volume Total (vph)	72	56	40	127
Volume Left (vph)	13	9	1	48
Volume Right (vph)	18	16	9	16
Hadj (s)	-0.06	-0.09	-0.08	0.05
Departure Headway (s)	4.3	4.3	4.2	4.3
Degree Utilization, x	0.09	0.07	0.05	0.15
Capacity (veh/h)	805	806	809	815
Control Delay (s)	7.7	7.6	7.5	8.0
Approach Delay (s)	7.7	7.6	7.5	8.0
Approach LOS	A	A	A	A

Intersection Summary			
Delay	7.8		
HCM Level of Service	A		
Intersection Capacity Utilization	32.4%	ICU Level of Service	A
Analysis Period (min)	15		

Movement	EBL	EBT	EBR	WBL	WBT	WBR	NBL	NBT	NBR	SBL	SBT	SBR
Lane Configurations												
Sign Control		Free			Free			Stop			Stop	
Grade		0%			0%			0%			0%	
Volume (veh/h)	5	17	11	12	26	21	8	34	3	12	42	1
Peak Hour Factor	0.92	0.92	0.92	0.92	0.92	0.92	0.92	0.92	0.92	0.92	0.92	0.92
Hourly flow rate (vph)	5	18	12	13	28	23	9	37	3	13	46	1
Pedestrians		50			50			50			50	
Lane Width (ft)		9.0			10.0			8.0			9.0	
Walking Speed (ft/s)		4.0			4.0			4.0			4.0	
Percent Blockage		3			3			3			3	
Right turn flare (veh)												
Median type								None			None	
Median storage veh)												
Upstream signal (ft)					452							
pX, platoon unblocked												
vC, conflicting volume	101			80			225	212	124	223	207	140
vC1, stage 1 conf vol												
vC2, stage 2 conf vol												
vCu, unblocked vol	101			80			225	212	124	223	207	140
tC, single (s)	4.1			4.1			7.1	6.5	6.2	7.1	6.5	6.2
tC, 2 stage (s)												
tF (s)	2.2			2.2			3.5	4.0	3.3	3.5	4.0	3.3
p0 queue free %	100			99			99	94	100	98	93	100
cM capacity (veh/h)	1439			1469			613	635	867	616	640	850

Direction, Lane #	EB 1	WB 1	NB 1	SB 1
Volume Total	36	64	49	60
Volume Left	5	13	9	13
Volume Right	12	23	3	1
cSH	1439	1469	643	637
Volume to Capacity	0.00	0.01	0.08	0.09
Queue Length 95th (ft)	0	1	6	8
Control Delay (s)	1.2	1.6	11.1	11.2
Lane LOS	A	A	B	B
Approach Delay (s)	1.2	1.6	11.1	11.2
Approach LOS			B	B

Intersection Summary			
Average Delay	6.5		
Intersection Capacity Utilization	30.5%	ICU Level of Service	A
Analysis Period (min)	15		

Movement	EBT	EBR	WBL	WBT	NBL	NBR
Lane Configurations						
Sign Control	Free			Free	Stop	
Grade	0%			0%	0%	
Volume (veh/h)	1	1	22	1	1	16
Peak Hour Factor	0.92	0.92	0.92	0.92	0.92	0.92
Hourly flow rate (vph)	1	1	24	1	1	17
Pedestrians	50			50	50	
Lane Width (ft)	12.0			9.0	12.0	
Walking Speed (ft/s)	4.0			4.0	4.0	
Percent Blockage	4			3	4	
Right turn flare (veh)						
Median type					None	
Median storage veh)						
Upstream signal (ft)						
pX, platoon unblocked						
vC, conflicting volume			52		151	102
vC1, stage 1 conf vol						
vC2, stage 2 conf vol						
vCu, unblocked vol			52		151	102
tC, single (s)			4.1		6.4	6.2
tC, 2 stage (s)						
tF (s)			2.2		3.5	3.3
p0 queue free %			98		100	98
cM capacity (veh/h)			1483		758	883

Direction, Lane #	EB 1	WB 1	NB 1
Volume Total	2	25	18
Volume Left	0	24	1
Volume Right	1	0	17
cSH	1700	1483	874
Volume to Capacity	0.00	0.02	0.02
Queue Length 95th (ft)	0	1	2
Control Delay (s)	0.0	7.1	9.2
Lane LOS		A	A
Approach Delay (s)	0.0	7.1	9.2
Approach LOS			A

Intersection Summary			
Average Delay	7.6		
Intersection Capacity Utilization	29.9%	ICU Level of Service	A
Analysis Period (min)	15		

Movement	EBL	EBT	EBR	WBL	WBT	WBR	NBL	NBT	NBR	SBL	SBT	SBR
Lane Configurations												
Sign Control		Free			Free			Stop			Stop	
Grade		0%			0%			0%			0%	
Volume (veh/h)	8	35	6	0	0	0	0	35	16	18	52	0
Peak Hour Factor	0.87	0.87	0.87	0.87	0.87	0.87	0.87	0.87	0.87	0.87	0.87	0.87
Hourly flow rate (vph)	9	40	7	0	0	0	0	40	18	21	60	0
Pedestrians		50			50			50			50	
Lane Width (ft)		11.0			0.0			9.0			11.0	
Walking Speed (ft/s)		4.0			4.0			4.0			4.0	
Percent Blockage		4			0			3			4	
Right turn flare (veh)												
Median type								None			None	
Median storage veh)												
Upstream signal (ft)												
pX, platoon unblocked												
vC, conflicting volume	50			97			192	162	144	201	166	100
vC1, stage 1 conf vol												
vC2, stage 2 conf vol												
vCu, unblocked vol	50			97			192	162	144	201	166	100
tC, single (s)	4.1			4.1			7.1	6.5	6.2	7.1	6.5	6.2
tC, 2 stage (s)												
tF (s)	2.2			2.2			3.5	4.0	3.3	3.5	4.0	3.3
p0 queue free %	99			100			100	94	98	97	91	100
cM capacity (veh/h)	1491			1443			628	675	873	641	672	881

Direction, Lane #	EB 1	NB 1	SB 1
Volume Total	56	59	80
Volume Left	9	0	21
Volume Right	7	18	0
cSH	1491	726	663
Volume to Capacity	0.01	0.08	0.12
Queue Length 95th (ft)	0	7	10
Control Delay (s)	1.3	10.4	11.2
Lane LOS	A	B	B
Approach Delay (s)	1.3	10.4	11.2
Approach LOS		B	B

Intersection Summary			
Average Delay	8.1		
Intersection Capacity Utilization	32.2%	ICU Level of Service	A
Analysis Period (min)	15		

Movement	EBL	EBT	EBR	WBL	WBT	WBR	NBL	NBT	NBR	SBL	SBT	SBR
Lane Configurations												
Sign Control		Stop			Stop			Stop			Stop	
Volume (vph)	5	14	16	0	0	0	15	37	23	10	24	9
Peak Hour Factor	0.94	0.94	0.94	0.94	0.94	0.94	0.94	0.94	0.94	0.94	0.94	0.94
Hourly flow rate (vph)	5	15	17	0	0	0	16	39	24	11	26	10

Direction, Lane #	EB 1	NB 1	SB 1
Volume Total (vph)	37	80	46
Volume Left (vph)	5	16	11
Volume Right (vph)	17	24	10
Hadj (s)	-0.19	-0.09	-0.03
Departure Headway (s)	4.0	3.9	4.0
Degree Utilization, x	0.04	0.09	0.05
Capacity (veh/h)	876	894	879
Control Delay (s)	7.1	7.3	7.2
Approach Delay (s)	7.1	7.3	7.2
Approach LOS	A	A	A

Intersection Summary			
Delay		7.2	
HCM Level of Service		A	
Intersection Capacity Utilization		31.3%	ICU Level of Service A
Analysis Period (min)		15	

Movement	WBL	WBR	NBT	NBR	SBL	SBT
Lane Configurations						
Sign Control	Stop		Free			Free
Grade	0%		0%			0%
Volume (veh/h)	20	11	2	13	5	6
Peak Hour Factor	0.92	0.92	0.92	0.92	0.92	0.92
Hourly flow rate (vph)	22	12	2	14	5	7
Pedestrians	50		50			50
Lane Width (ft)	9.0		8.0			8.0
Walking Speed (ft/s)	4.0		4.0			4.0
Percent Blockage	3		3			3
Right turn flare (veh)						
Median type	None					
Median storage veh)						
Upstream signal (ft)						
pX, platoon unblocked						
vC, conflicting volume	127	109			66	
vC1, stage 1 conf vol						
vC2, stage 2 conf vol						
vCu, unblocked vol	127	109			66	
tC, single (s)	6.4	6.2			4.1	
tC, 2 stage (s)						
tF (s)	3.5	3.3			2.2	
p0 queue free %	97	99			100	
cM capacity (veh/h)	812	887			1481	

Direction, Lane #	WB 1	NB 1	SB 1
Volume Total	34	16	12
Volume Left	22	0	5
Volume Right	12	14	0
cSH	837	1700	1481
Volume to Capacity	0.04	0.01	0.00
Queue Length 95th (ft)	3	0	0
Control Delay (s)	9.5	0.0	3.4
Lane LOS	A		A
Approach Delay (s)	9.5	0.0	3.4
Approach LOS	A		

Intersection Summary			
Average Delay	5.8		
Intersection Capacity Utilization	29.8%	ICU Level of Service	A
Analysis Period (min)	15		

Movement	EBL	EBT	EBR	WBL	WBT	WBR	NBL	NBT	NBR	SBL	SBT	SBR
Lane Configurations												
Sign Control		Stop			Stop			Free			Free	
Grade		0%			0%			0%			0%	
Volume (veh/h)	13	19	34	0	0	0	0	196	20	26	279	0
Peak Hour Factor	0.92	0.92	0.92	0.92	0.92	0.92	0.92	0.92	0.92	0.92	0.92	0.92
Hourly flow rate (vph)	14	21	37	0	0	0	0	213	22	28	303	0
Pedestrians		50			50			50			50	
Lane Width (ft)		8.0			0.0			11.0			11.0	
Walking Speed (ft/s)		4.0			4.0			4.0			4.0	
Percent Blockage		3			0			4			4	
Right turn flare (veh)												
Median type		None			None							
Median storage veh)												
Upstream signal (ft)								398			1257	
pX, platoon unblocked												
vC, conflicting volume	684	695	403	731	684	324	353			285		
vC1, stage 1 conf vol												
vC2, stage 2 conf vol												
vCu, unblocked vol	684	695	403	731	684	324	353			285		
tC, single (s)	7.1	6.5	6.2	7.1	6.5	6.2	4.1			4.1		
tC, 2 stage (s)												
tF (s)	3.5	4.0	3.3	3.5	4.0	3.3	2.2			2.2		
p0 queue free %	96	94	94	100	100	100	100			98		
cM capacity (veh/h)	325	347	603	279	352	688	1167			1272		

Direction, Lane #	EB 1	NB 1	SB 1
Volume Total	72	235	332
Volume Left	14	0	28
Volume Right	37	22	0
cSH	437	1700	1272
Volume to Capacity	0.16	0.14	0.02
Queue Length 95th (ft)	15	0	2
Control Delay (s)	14.9	0.0	0.9
Lane LOS	B		A
Approach Delay (s)	14.9	0.0	0.9
Approach LOS	B		

Intersection Summary			
Average Delay	2.1		
Intersection Capacity Utilization	54.5%	ICU Level of Service	A
Analysis Period (min)	15		

Movement	EBL	EBT	EBR	WBL	WBT	WBR	NBL	NBT	NBR	SBL	SBT	SBR
Lane Configurations												
Sign Control		Stop			Stop			Free			Free	
Grade		0%			0%			0%			0%	
Volume (veh/h)	0	0	0	13	28	16	43	183	0	0	297	25
Peak Hour Factor	0.93	0.93	0.93	0.93	0.93	0.93	0.93	0.93	0.93	0.93	0.93	0.93
Hourly flow rate (vph)	0	0	0	14	30	17	46	197	0	0	319	27
Pedestrians		50			50			50			50	
Lane Width (ft)		0.0			12.0			11.0			11.0	
Walking Speed (ft/s)		4.0			4.0			4.0			4.0	
Percent Blockage		0			4			4			4	
Right turn flare (veh)												
Median type		None			None							
Median storage veh)												
Upstream signal (ft)								795			860	
pX, platoon unblocked												
vC, conflicting volume	754	722	433	722	735	297	396			247		
vC1, stage 1 conf vol												
vC2, stage 2 conf vol												
vCu, unblocked vol	754	722	433	722	735	297	396			247		
tC, single (s)	7.1	6.5	6.2	7.1	6.5	6.2	4.1			4.1		
tC, 2 stage (s)												
tF (s)	3.5	4.0	3.3	3.5	4.0	3.3	2.2			2.2		
p0 queue free %	100	100	100	95	91	97	96			100		
cM capacity (veh/h)	265	324	597	295	318	682	1157			1259		

Direction, Lane #	WB 1	NB 1	SB 1
Volume Total	61	243	346
Volume Left	14	46	0
Volume Right	17	0	27
cSH	366	1157	1259
Volume to Capacity	0.17	0.04	0.00
Queue Length 95th (ft)	15	3	0
Control Delay (s)	16.8	1.9	0.0
Lane LOS	C	A	
Approach Delay (s)	16.8	1.9	0.0
Approach LOS	C		

Intersection Summary			
Average Delay	2.3		
Intersection Capacity Utilization	55.7%	ICU Level of Service	B
Analysis Period (min)	15		

Movement	EBL	EBT	EBR	WBL	WBT	WBR	NBL	NBT	NBR	SBL	SBT	SBR
Lane Configurations												
Ideal Flow (vphpl)	1900	1900	1900	1900	1900	1900	1900	1900	1900	1900	1900	1900
Lane Width	12	12	12	12	11	12	12	9	12	12	9	12
Total Lost time (s)					4.0			4.0			4.0	
Lane Util. Factor					1.00			1.00			1.00	
Frpb, ped/bikes					0.99			1.00			0.98	
Flpb, ped/bikes					0.97			0.98			1.00	
Frt					0.98			1.00			0.97	
Flt Protected					0.98			0.98			1.00	
Satd. Flow (prot)					1178			1147			1132	
Flt Permitted					0.98			0.93			1.00	
Satd. Flow (perm)					1178			1084			1132	
Volume (vph)	0	0	0	22	27	9	15	28	0	0	54	16
Peak-hour factor, PHF	0.86	0.86	0.86	0.86	0.86	0.86	0.86	0.86	0.86	0.86	0.86	0.86
Adj. Flow (vph)	0	0	0	26	31	10	17	33	0	0	63	19
RTOR Reduction (vph)	0	0	0	0	6	0	0	0	0	0	11	0
Lane Group Flow (vph)	0	0	0	0	61	0	0	50	0	0	71	0
Confl. Peds. (#/hr)	50		50	50		50	50		50	50		50
Parking (#/hr)	20	20	20	20	20	20	20	20	20	20	20	20
Turn Type				Perm			Perm					
Protected Phases					8			2			6	
Permitted Phases				8			2					
Actuated Green, G (s)					20.0			20.0			20.0	
Effective Green, g (s)					20.0			20.0			20.0	
Actuated g/C Ratio					0.42			0.42			0.42	
Clearance Time (s)					4.0			4.0			4.0	
Vehicle Extension (s)					3.0			3.0			3.0	
Lane Grp Cap (vph)					491			452			472	
v/s Ratio Prot											c0.06	
v/s Ratio Perm					0.05			0.05				
v/c Ratio					0.12			0.11			0.15	
Uniform Delay, d1					8.6			8.6			8.7	
Progression Factor					1.00			1.00			1.00	
Incremental Delay, d2					0.5			0.5			0.7	
Delay (s)					9.1			9.1			9.4	
Level of Service					A			A			A	
Approach Delay (s)		0.0			9.1			9.1			9.4	
Approach LOS		A			A			A			A	

Intersection Summary			
HCM Average Control Delay	9.2	HCM Level of Service	A
HCM Volume to Capacity ratio	0.14		
Actuated Cycle Length (s)	48.0	Sum of lost time (s)	8.0
Intersection Capacity Utilization	31.7%	ICU Level of Service	A
Analysis Period (min)	15		

c Critical Lane Group

Movement	EBL	EBT	EBR	WBL	WBT	WBR	NBL	NBT	NBR	SBL	SBT	SBR
Lane Configurations												
Sign Control		Stop			Stop			Stop			Stop	
Volume (vph)	7	0	4	38	6	12	5	33	0	0	24	0
Peak Hour Factor	0.85	0.85	0.85	0.85	0.85	0.85	0.85	0.85	0.85	0.85	0.85	0.85
Hourly flow rate (vph)	8	0	5	45	7	14	6	39	0	0	28	0

Direction, Lane #	EB 1	EB 2	WB 1	NB 1	SB 1
Volume Total (vph)	8	5	66	45	28
Volume Left (vph)	8	0	45	6	0
Volume Right (vph)	0	5	14	0	0
Hadj (s)	0.55	-0.65	0.06	0.08	0.05
Departure Headway (s)	5.3	4.1	4.2	4.2	4.2
Degree Utilization, x	0.01	0.01	0.08	0.05	0.03
Capacity (veh/h)	670	858	832	834	841
Control Delay (s)	7.1	5.9	7.6	7.4	7.3
Approach Delay (s)	6.7		7.6	7.4	7.3
Approach LOS	A		A	A	A

Intersection Summary			
Delay	7.4		
HCM Level of Service	A		
Intersection Capacity Utilization	44.7%	ICU Level of Service	A
Analysis Period (min)	15		

Movement	WBL	WBR	NBT	NBR	SBL	SBT
Lane Configurations						
Sign Control	Stop		Free			Free
Grade	0%		0%			0%
Volume (veh/h)	11	1	1	12	1	0
Peak Hour Factor	0.92	0.92	0.92	0.92	0.92	0.92
Hourly flow rate (vph)	12	1	1	13	1	0
Pedestrians	50		50			50
Lane Width (ft)	9.0		8.0			8.0
Walking Speed (ft/s)	4.0		4.0			4.0
Percent Blockage	3		3			3
Right turn flare (veh)						
Median type	None					
Median storage veh)						
Upstream signal (ft)						
pX, platoon unblocked						
vC, conflicting volume	110	108			64	
vC1, stage 1 conf vol						
vC2, stage 2 conf vol						
vCu, unblocked vol	110	108			64	
tC, single (s)	6.4	6.2			4.1	
tC, 2 stage (s)						
tF (s)	3.5	3.3			2.2	
p0 queue free %	99	100			100	
cM capacity (veh/h)	833	889			1484	

Direction, Lane #	WB 1	NB 1	SB 1
Volume Total	13	14	1
Volume Left	12	0	1
Volume Right	1	13	0
cSH	837	1700	1484
Volume to Capacity	0.02	0.01	0.00
Queue Length 95th (ft)	1	0	0
Control Delay (s)	9.4	0.0	7.4
Lane LOS	A		A
Approach Delay (s)	9.4	0.0	7.4
Approach LOS	A		

Intersection Summary			
Average Delay	4.6		
Intersection Capacity Utilization	29.8%	ICU Level of Service	A
Analysis Period (min)	15		

APPENDIX D
FUTURE LEVEL OF SERVICE

ATEC
Advanced Transportation
Engineering Consultants

Movement	EBL	EBT	EBR	WBL	WBT	WBR	NBL	NBT	NBR	SBL	SBT	SBR
Lane Configurations												
Ideal Flow (vphpl)	1900	1900	1900	1900	1900	1900	1900	1900	1900	1900	1900	1900
Lane Width	12	12	12	12	12	12	12	11	12	12	11	12
Total Lost time (s)	4.0		4.0		4.0			4.0			4.0	
Lane Util. Factor	1.00		1.00		1.00			1.00			1.00	
Frpb, ped/bikes	1.00		0.88		0.96			1.00			0.93	
Flpb, ped/bikes	0.91		1.00		0.94			0.98			1.00	
Frt	1.00		0.85		0.95			1.00			0.92	
Flt Protected	0.95		1.00		0.97			0.98			1.00	
Satd. Flow (prot)	1149		992		1098			1234			1103	
Flt Permitted	0.74		1.00		0.97			0.86			1.00	
Satd. Flow (perm)	895		992		1098			1073			1103	
Volume (vph)	115	0	36	51	2	29	59	125	0	0	89	119
Peak-hour factor, PHF	0.92	0.92	0.92	0.92	0.92	0.92	0.92	0.92	0.92	0.92	0.92	0.92
Adj. Flow (vph)	125	0	39	55	2	32	64	136	0	0	97	129
RTOR Reduction (vph)	0	0	25	0	20	0	0	0	0	0	63	0
Lane Group Flow (vph)	125	0	14	0	69	0	0	200	0	0	163	0
Confl. Peds. (#/hr)	50		50	50		50	50		50	50		50
Parking (#/hr)	20	20	20	20	20	20	20	20	20	20	20	20
Turn Type	custom		custom	Perm			Perm					
Protected Phases					8			2			6	
Permitted Phases	4		4	8			2					
Actuated Green, G (s)	25.0		25.0		25.0			35.0			35.0	
Effective Green, g (s)	26.0		26.0		26.0			36.0			36.0	
Actuated g/C Ratio	0.37		0.37		0.37			0.51			0.51	
Clearance Time (s)	5.0		5.0		5.0			5.0			5.0	
Lane Grp Cap (vph)	332		368		408			552			567	
v/s Ratio Prot											0.15	
v/s Ratio Perm	c0.14		0.01		0.06			c0.19				
v/c Ratio	0.38		0.04		0.17			0.36			0.29	
Uniform Delay, d1	16.1		14.0		14.8			10.1			9.7	
Progression Factor	1.00		1.00		1.00			1.00			1.00	
Incremental Delay, d2	3.2		0.2		0.9			1.8			1.3	
Delay (s)	19.3		14.2		15.6			12.0			11.0	
Level of Service	B		B		B			B			B	
Approach Delay (s)		18.1			15.6			12.0			11.0	
Approach LOS		B			B			B			B	

Intersection Summary			
HCM Average Control Delay	13.6	HCM Level of Service	B
HCM Volume to Capacity ratio	0.37		
Actuated Cycle Length (s)	70.0	Sum of lost time (s)	8.0
Intersection Capacity Utilization	53.9%	ICU Level of Service	A
Analysis Period (min)	15		
c Critical Lane Group			

Movement	EBL	EBT	EBR	WBL	WBT	WBR	NBL	NBT	NBR	SBL	SBT	SBR
Lane Configurations												
Sign Control		Stop			Stop			Stop			Stop	
Volume (vph)	1	69	22	70	126	86	21	38	76	1	2	4
Peak Hour Factor	0.92	0.92	0.92	0.92	0.92	0.92	0.92	0.92	0.92	0.92	0.92	0.92
Hourly flow rate (vph)	1	75	24	76	137	93	23	41	83	1	2	4

Direction, Lane #	EB 1	WB 1	NB 1	SB 1
Volume Total (vph)	100	307	147	8
Volume Left (vph)	1	76	23	1
Volume Right (vph)	24	93	83	4
Hadj (s)	-0.09	-0.08	-0.26	-0.26
Departure Headway (s)	4.5	4.3	4.6	4.8
Degree Utilization, x	0.13	0.37	0.19	0.01
Capacity (veh/h)	757	802	729	674
Control Delay (s)	8.2	9.8	8.6	7.8
Approach Delay (s)	8.2	9.8	8.6	7.8
Approach LOS	A	A	A	A

Intersection Summary			
Delay	9.2		
HCM Level of Service	A		
Intersection Capacity Utilization	46.2%	ICU Level of Service	A
Analysis Period (min)	15		

Movement	EBL	EBT	EBR	WBL	WBT	WBR	NBL	NBT	NBR	SBL	SBT	SBR
Lane Configurations												
Ideal Flow (vphpl)	1900	1900	1900	1900	1900	1900	1900	1900	1900	1900	1900	1900
Lane Width	12	12	12	12	12	12	12	8	12	12	12	12
Total Lost time (s)		4.0			4.0			4.0			4.0	
Lane Util. Factor		1.00			1.00			1.00			1.00	
Frpb, ped/bikes		0.99			0.95			1.00			1.00	
Flpb, ped/bikes		1.00			1.00			0.99			0.99	
Frt		0.99			0.92			0.99			1.00	
Flt Protected		1.00			1.00			0.99			0.99	
Satd. Flow (prot)		1300			1149			1121			1283	
Flt Permitted		0.99			0.98			0.95			0.86	
Satd. Flow (perm)		1287			1133			1067			1122	
Volume (vph)	4	49	4	11	41	80	32	185	14	53	119	6
Peak-hour factor, PHF	0.95	0.95	0.95	0.95	0.95	0.95	0.95	0.95	0.95	0.95	0.95	0.95
Adj. Flow (vph)	4	52	4	12	43	84	34	195	15	56	125	6
RTOR Reduction (vph)	0	2	0	0	49	0	0	5	0	0	2	0
Lane Group Flow (vph)	0	58	0	0	90	0	0	239	0	0	185	0
Confl. Peds. (#/hr)	50		50	50		50	50		50	50		50
Parking (#/hr)	20	20	20	20	20	20	20	20	20	20	20	20
Turn Type	Perm			Perm			Perm			Perm		
Protected Phases		4			8			2			6	
Permitted Phases	4			8			2			6		
Actuated Green, G (s)		20.0			20.0			20.0			20.0	
Effective Green, g (s)		21.0			21.0			21.0			21.0	
Actuated g/C Ratio		0.42			0.42			0.42			0.42	
Clearance Time (s)		5.0			5.0			5.0			5.0	
Lane Grp Cap (vph)		541			476			448			471	
v/s Ratio Prot												
v/s Ratio Perm		0.04			c0.08			c0.22			0.16	
v/c Ratio		0.11			0.19			0.53			0.39	
Uniform Delay, d1		8.8			9.1			10.8			10.1	
Progression Factor		1.00			1.00			1.00			1.00	
Incremental Delay, d2		0.4			0.9			4.5			2.4	
Delay (s)		9.2			10.0			15.4			12.5	
Level of Service		A			B			B			B	
Approach Delay (s)		9.2			10.0			15.4			12.5	
Approach LOS		A			B			B			B	

Intersection Summary			
HCM Average Control Delay	12.7	HCM Level of Service	B
HCM Volume to Capacity ratio	0.36		
Actuated Cycle Length (s)	50.0	Sum of lost time (s)	8.0
Intersection Capacity Utilization	43.3%	ICU Level of Service	A
Analysis Period (min)	15		
c Critical Lane Group			

Movement	EBL	EBT	EBR	WBL	WBT	WBR	NBL	NBT	NBR	SBL	SBT	SBR
Lane Configurations												
Ideal Flow (vphpl)	1900	1900	1900	1900	1900	1900	1900	1900	1900	1900	1900	1900
Lane Width	12	8	12	12	10	12	12	8	12	12	8	12
Total Lost time (s)		4.0			4.0			4.0			4.0	
Lane Util. Factor		1.00			1.00			1.00			1.00	
Frpb, ped/bikes		0.99			0.97			0.97			0.98	
Flpb, ped/bikes		1.00			0.99			0.99			0.97	
Frt		0.99			0.97			0.96			0.98	
Flt Protected		1.00			1.00			1.00			0.99	
Satd. Flow (prot)		1121			1156			1065			1061	
Flt Permitted		0.99			0.99			0.98			0.94	
Satd. Flow (perm)		1113			1144			1053			1015	
Volume (vph)	2	40	4	5	41	15	2	15	6	13	22	7
Peak-hour factor, PHF	0.79	0.79	0.79	0.79	0.79	0.79	0.79	0.79	0.79	0.79	0.79	0.79
Adj. Flow (vph)	3	51	5	6	52	19	3	19	8	16	28	9
RTOR Reduction (vph)	0	3	0	0	12	0	0	5	0	0	5	0
Lane Group Flow (vph)	0	56	0	0	66	0	0	25	0	0	48	0
Confl. Peds. (#/hr)	50		50	50		50	50		50	50		50
Parking (#/hr)	20	20	20	20	20	20	20	20	20	20	20	20
Turn Type	Perm			Perm			Perm			Perm		
Protected Phases		4			8			2			6	
Permitted Phases	4			8			2			6		
Actuated Green, G (s)		15.0			15.0			15.0			15.0	
Effective Green, g (s)		15.0			15.0			15.0			15.0	
Actuated g/C Ratio		0.39			0.39			0.39			0.39	
Clearance Time (s)		4.0			4.0			4.0			4.0	
Lane Grp Cap (vph)		439			452			416			401	
v/s Ratio Prot												
v/s Ratio Perm		0.05			c0.06			0.02			c0.05	
v/c Ratio		0.13			0.14			0.06			0.12	
Uniform Delay, d1		7.3			7.4			7.1			7.3	
Progression Factor		1.00			1.00			1.00			1.00	
Incremental Delay, d2		0.6			0.7			0.3			0.6	
Delay (s)		7.9			8.1			7.4			7.9	
Level of Service		A			A			A			A	
Approach Delay (s)		7.9			8.1			7.4			7.9	
Approach LOS		A			A			A			A	

Intersection Summary			
HCM Average Control Delay	7.9	HCM Level of Service	A
HCM Volume to Capacity ratio	0.13		
Actuated Cycle Length (s)	38.0	Sum of lost time (s)	8.0
Intersection Capacity Utilization	25.0%	ICU Level of Service	A
Analysis Period (min)	15		
c Critical Lane Group			

Movement	WBL	WBR	NBT	NBR	SBL	SBT
Lane Configurations						
Sign Control	Stop		Stop			Stop
Volume (vph)	1	43	1	1	32	1
Peak Hour Factor	0.92	0.92	0.92	0.92	0.92	0.92
Hourly flow rate (vph)	1	47	1	1	35	1

Direction, Lane #	NB 1	SB 1
Volume Total (vph)	2	36
Volume Left (vph)	0	35
Volume Right (vph)	1	0
Hadj (s)	-0.25	0.24
Departure Headway (s)	3.7	4.1
Degree Utilization, x	0.00	0.04
Capacity (veh/h)	971	863
Control Delay (s)	6.7	7.3
Approach Delay (s)	6.7	7.3
Approach LOS	A	A

Intersection Summary			
Delay	Err		
HCM Level of Service	F		
Intersection Capacity Utilization	Err%	ICU Level of Service	H
Analysis Period (min)	15		

Movement	EBL	EBT	EBR	WBL	WBT	WBR	NBL	NBT	NBR	SBL	SBT	SBR
Lane Configurations												
Sign Control		Stop			Stop			Free			Free	
Grade		0%			0%			0%			0%	
Volume (veh/h)	19	26	2	53	7	20	18	180	18	11	117	28
Peak Hour Factor	0.92	0.92	0.92	0.92	0.92	0.92	0.92	0.92	0.92	0.92	0.92	0.92
Hourly flow rate (vph)	21	28	2	58	8	22	20	196	20	12	127	30
Pedestrians		50			50			50			50	
Lane Width (ft)		12.0			12.0			11.0			11.0	
Walking Speed (ft/s)		4.0			4.0			4.0			4.0	
Percent Blockage		4			4			4			4	
Right turn flare (veh)												
Median type		None			None							
Median storage veh)												
Upstream signal (ft)								1212			443	
pX, platoon unblocked												
vC, conflicting volume	536	521	242	527	526	305	208			265		
vC1, stage 1 conf vol												
vC2, stage 2 conf vol												
vCu, unblocked vol	536	521	242	527	526	305	208			265		
tC, single (s)	7.1	6.5	6.2	7.1	6.5	6.2	4.1			4.1		
tC, 2 stage (s)												
tF (s)	3.5	4.0	3.3	3.5	4.0	3.3	2.2			2.2		
p0 queue free %	94	93	100	84	98	97	98			99		
cM capacity (veh/h)	367	411	732	369	408	675	1301			1239		

Direction, Lane #	EB 1	WB 1	NB 1	SB 1
Volume Total	51	87	235	170
Volume Left	21	58	20	12
Volume Right	2	22	20	30
cSH	399	420	1301	1239
Volume to Capacity	0.13	0.21	0.02	0.01
Queue Length 95th (ft)	11	19	1	1
Control Delay (s)	15.3	15.8	0.8	0.6
Lane LOS	C	C	A	A
Approach Delay (s)	15.3	15.8	0.8	0.6
Approach LOS	C	C		

Intersection Summary			
Average Delay	4.5		
Intersection Capacity Utilization	37.0%	ICU Level of Service	A
Analysis Period (min)	15		

Movement	EBL	EBT	EBR	WBL	WBT	WBR	NBL	NBT	NBR	SBL	SBT	SBR
Lane Configurations												
Sign Control		Stop			Stop			Stop			Stop	
Volume (vph)	20	18	9	21	20	12	11	100	81	9	8	30
Peak Hour Factor	0.89	0.89	0.89	0.89	0.89	0.89	0.89	0.89	0.89	0.89	0.89	0.89
Hourly flow rate (vph)	22	20	10	24	22	13	12	112	91	10	9	34

Direction, Lane #	EB 1	WB 1	NB 1	SB 1
Volume Total (vph)	53	60	216	53
Volume Left (vph)	22	24	12	10
Volume Right (vph)	10	13	91	34
Hadj (s)	0.02	-0.01	-0.19	-0.29
Departure Headway (s)	4.6	4.5	4.0	4.1
Degree Utilization, x	0.07	0.07	0.24	0.06
Capacity (veh/h)	730	738	864	843
Control Delay (s)	7.9	7.9	8.3	7.4
Approach Delay (s)	7.9	7.9	8.3	7.4
Approach LOS	A	A	A	A

Intersection Summary			
Delay	8.1		
HCM Level of Service	A		
Intersection Capacity Utilization	33.1%	ICU Level of Service	A
Analysis Period (min)	15		

Movement	EBL	EBT	EBR	WBL	WBT	WBR	NBL	NBT	NBR	SBL	SBT	SBR
Lane Configurations												
Sign Control		Free			Free			Stop			Stop	
Grade		0%			0%			0%			0%	
Volume (veh/h)	1	22	9	4	33	18	9	19	5	13	10	1
Peak Hour Factor	0.84	0.84	0.84	0.84	0.84	0.84	0.84	0.84	0.84	0.84	0.84	0.84
Hourly flow rate (vph)	1	26	11	5	39	21	11	23	6	15	12	1
Pedestrians		50			50			50			50	
Lane Width (ft)		9.0			10.0			8.0			9.0	
Walking Speed (ft/s)		4.0			4.0			4.0			4.0	
Percent Blockage		3			3			3			3	
Right turn flare (veh)												
Median type								None			None	
Median storage veh)												
Upstream signal (ft)					452							
pX, platoon unblocked												
vC, conflicting volume	111			87			201	204	132	211	199	150
vC1, stage 1 conf vol												
vC2, stage 2 conf vol												
vCu, unblocked vol	111			87			201	204	132	211	199	150
tC, single (s)	4.1			4.1			7.1	6.5	6.2	7.1	6.5	6.2
tC, 2 stage (s)												
tF (s)	2.2			2.2			3.5	4.0	3.3	3.5	4.0	3.3
p0 queue free %	100			100			98	97	99	98	98	100
cM capacity (veh/h)	1427			1461			668	648	859	641	652	839

Direction, Lane #	EB 1	WB 1	NB 1	SB 1
Volume Total	38	65	39	29
Volume Left	1	5	11	15
Volume Right	11	21	6	1
cSH	1427	1461	678	652
Volume to Capacity	0.00	0.00	0.06	0.04
Queue Length 95th (ft)	0	0	5	3
Control Delay (s)	0.2	0.6	10.6	10.8
Lane LOS	A	A	B	B
Approach Delay (s)	0.2	0.6	10.6	10.8
Approach LOS			B	B

Intersection Summary			
Average Delay	4.5		
Intersection Capacity Utilization	30.2%	ICU Level of Service	A
Analysis Period (min)	15		

Movement	EBT	EBR	WBL	WBT	NBL	NBR
Lane Configurations						
Sign Control	Free			Free	Stop	
Grade	0%			0%	0%	
Volume (veh/h)	1	1	13	1	1	6
Peak Hour Factor	0.92	0.92	0.92	0.92	0.92	0.92
Hourly flow rate (vph)	1	1	14	1	1	7
Pedestrians	50			50	50	
Lane Width (ft)	12.0			9.0	12.0	
Walking Speed (ft/s)	4.0			4.0	4.0	
Percent Blockage	4			3	4	
Right turn flare (veh)						
Median type					None	
Median storage veh)						
Upstream signal (ft)						
pX, platoon unblocked						
vC, conflicting volume			52		131	102
vC1, stage 1 conf vol						
vC2, stage 2 conf vol						
vCu, unblocked vol			52		131	102
tC, single (s)			4.1		6.4	6.2
tC, 2 stage (s)						
tF (s)			2.2		3.5	3.3
p0 queue free %			99		100	99
cM capacity (veh/h)			1483		783	883

Direction, Lane #	EB 1	WB 1	NB 1
Volume Total	2	15	8
Volume Left	0	14	1
Volume Right	1	0	7
cSH	1700	1483	867
Volume to Capacity	0.00	0.01	0.01
Queue Length 95th (ft)	0	1	1
Control Delay (s)	0.0	6.9	9.2
Lane LOS		A	A
Approach Delay (s)	0.0	6.9	9.2
Approach LOS			A

Intersection Summary			
Average Delay	7.0		
Intersection Capacity Utilization	29.7%	ICU Level of Service	A
Analysis Period (min)	15		

Movement	EBL	EBT	EBR	WBL	WBT	WBR	NBL	NBT	NBR	SBL	SBT	SBR
Lane Configurations												
Sign Control		Free			Free			Stop			Stop	
Grade		0%			0%			0%			0%	
Volume (veh/h)	84	126	8	0	0	0	0	26	6	6	28	0
Peak Hour Factor	0.68	0.68	0.68	0.68	0.68	0.68	0.68	0.68	0.68	0.68	0.68	0.68
Hourly flow rate (vph)	124	185	12	0	0	0	0	38	9	9	41	0
Pedestrians		50			50			50			50	
Lane Width (ft)		11.0			0.0			9.0			11.0	
Walking Speed (ft/s)		4.0			4.0			4.0			4.0	
Percent Blockage		4			0			3			4	
Right turn flare (veh)												
Median type								None			None	
Median storage veh)												
Upstream signal (ft)												
pX, platoon unblocked												
vC, conflicting volume	50			247			559	538	291	566	544	100
vC1, stage 1 conf vol												
vC2, stage 2 conf vol												
vCu, unblocked vol	50			247			559	538	291	566	544	100
tC, single (s)	4.1			4.1			7.1	6.5	6.2	7.1	6.5	6.2
tC, 2 stage (s)												
tF (s)	2.2			2.2			3.5	4.0	3.3	3.5	4.0	3.3
p0 queue free %	92			100			100	90	99	97	89	100
cM capacity (veh/h)	1491			1272			333	383	722	338	380	881

Direction, Lane #	EB 1	NB 1	SB 1
Volume Total	321	47	50
Volume Left	124	0	9
Volume Right	12	9	0
cSH	1491	420	372
Volume to Capacity	0.08	0.11	0.13
Queue Length 95th (ft)	7	9	12
Control Delay (s)	3.4	14.6	16.2
Lane LOS	A	B	C
Approach Delay (s)	3.4	14.6	16.2
Approach LOS		B	C

Intersection Summary			
Average Delay		6.2	
Intersection Capacity Utilization		38.8%	ICU Level of Service A
Analysis Period (min)		15	

Movement	EBL	EBT	EBR	WBL	WBT	WBR	NBL	NBT	NBR	SBL	SBT	SBR
Lane Configurations												
Sign Control		Stop			Stop			Stop			Stop	
Volume (vph)	6	185	7	0	0	0	9	15	11	10	24	9
Peak Hour Factor	0.92	0.92	0.92	0.92	0.92	0.92	0.92	0.92	0.92	0.92	0.92	0.92
Hourly flow rate (vph)	7	201	8	0	0	0	10	16	12	11	26	10

Direction, Lane #	EB 1	NB 1	SB 1
Volume Total (vph)	215	38	47
Volume Left (vph)	7	10	11
Volume Right (vph)	8	12	10
Hadj (s)	0.04	-0.09	-0.03
Departure Headway (s)	4.1	4.4	4.4
Degree Utilization, x	0.25	0.05	0.06
Capacity (veh/h)	853	780	767
Control Delay (s)	8.5	7.6	7.7
Approach Delay (s)	8.5	7.6	7.7
Approach LOS	A	A	A

Intersection Summary			
Delay		8.2	
HCM Level of Service		A	
Intersection Capacity Utilization		35.1%	ICU Level of Service A
Analysis Period (min)		15	

Movement	WBL	WBR	NBT	NBR	SBL	SBT
Lane Configurations						
Sign Control	Stop		Free			Free
Grade	0%		0%			0%
Volume (veh/h)	9	7	21	13	179	23
Peak Hour Factor	0.92	0.92	0.92	0.92	0.92	0.92
Hourly flow rate (vph)	10	8	23	14	195	25
Pedestrians	50		50			50
Lane Width (ft)	9.0		8.0			8.0
Walking Speed (ft/s)	4.0		4.0			4.0
Percent Blockage	3		3			3
Right turn flare (veh)						
Median type	None					
Median storage veh)						
Upstream signal (ft)						
pX, platoon unblocked						
vC, conflicting volume	544	130			87	
vC1, stage 1 conf vol						
vC2, stage 2 conf vol						
vCu, unblocked vol	544	130			87	
tC, single (s)	6.4	6.2			4.1	
tC, 2 stage (s)						
tF (s)	3.5	3.3			2.2	
p0 queue free %	98	99			87	
cM capacity (veh/h)	407	864			1456	

Direction, Lane #	WB 1	NB 1	SB 1
Volume Total	17	37	220
Volume Left	10	0	195
Volume Right	8	14	0
cSH	529	1700	1456
Volume to Capacity	0.03	0.02	0.13
Queue Length 95th (ft)	3	0	12
Control Delay (s)	12.0	0.0	7.1
Lane LOS	B		A
Approach Delay (s)	12.0	0.0	7.1
Approach LOS	B		

Intersection Summary			
Average Delay	6.4		
Intersection Capacity Utilization	37.1%	ICU Level of Service	A
Analysis Period (min)	15		

Movement	EBL	EBT	EBR	WBL	WBT	WBR	NBL	NBT	NBR	SBL	SBT	SBR
Lane Configurations												
Sign Control		Stop			Stop			Free			Free	
Grade		0%			0%			0%			0%	
Volume (veh/h)	36	14	77	0	0	0	0	267	6	10	93	0
Peak Hour Factor	0.93	0.93	0.93	0.93	0.93	0.93	0.93	0.93	0.93	0.93	0.93	0.93
Hourly flow rate (vph)	39	15	83	0	0	0	0	287	6	11	100	0
Pedestrians		50			50			50			50	
Lane Width (ft)		8.0			0.0			11.0			11.0	
Walking Speed (ft/s)		4.0			4.0			4.0			4.0	
Percent Blockage		3			0			4			4	
Right turn flare (veh)												
Median type		None			None							
Median storage veh)												
Upstream signal (ft)								398			1257	
pX, platoon unblocked												
vC, conflicting volume	512	515	200	602	512	390	150			344		
vC1, stage 1 conf vol												
vC2, stage 2 conf vol												
vCu, unblocked vol	512	515	200	602	512	390	150			344		
tC, single (s)	7.1	6.5	6.2	7.1	6.5	6.2	4.1			4.1		
tC, 2 stage (s)												
tF (s)	3.5	4.0	3.3	3.5	4.0	3.3	2.2			2.2		
p0 queue free %	91	97	89	100	100	100	100			99		
cM capacity (veh/h)	428	445	784	334	447	631	1386			1210		

Direction, Lane #	EB 1	NB 1	SB 1
Volume Total	137	294	111
Volume Left	39	0	11
Volume Right	83	6	0
cSH	594	1700	1210
Volume to Capacity	0.23	0.17	0.01
Queue Length 95th (ft)	22	0	1
Control Delay (s)	12.9	0.0	0.8
Lane LOS	B		A
Approach Delay (s)	12.9	0.0	0.8
Approach LOS	B		

Intersection Summary			
Average Delay	3.4		
Intersection Capacity Utilization	40.1%	ICU Level of Service	A
Analysis Period (min)	15		

Movement	EBL	EBT	EBR	WBL	WBT	WBR	NBL	NBT	NBR	SBL	SBT	SBR
Lane Configurations												
Sign Control		Stop			Stop			Free			Free	
Grade		0%			0%			0%			0%	
Volume (veh/h)	0	0	0	6	15	6	85	210	0	0	137	40
Peak Hour Factor	0.89	0.89	0.89	0.89	0.89	0.89	0.89	0.89	0.89	0.89	0.89	0.89
Hourly flow rate (vph)	0	0	0	7	17	7	96	236	0	0	154	45
Pedestrians		50			50			50			50	
Lane Width (ft)		0.0			12.0			11.0			11.0	
Walking Speed (ft/s)		4.0			4.0			4.0			4.0	
Percent Blockage		0			4			4			4	
Right turn flare (veh)												
Median type		None			None							
Median storage veh)												
Upstream signal (ft)								795			860	
pX, platoon unblocked												
vC, conflicting volume	719	703	276	703	726	336	249			286		
vC1, stage 1 conf vol												
vC2, stage 2 conf vol												
vCu, unblocked vol	719	703	276	703	726	336	249			286		
tC, single (s)	7.1	6.5	6.2	7.1	6.5	6.2	4.1			4.1		
tC, 2 stage (s)												
tF (s)	3.5	4.0	3.3	3.5	4.0	3.3	2.2			2.2		
p0 queue free %	100	100	100	98	95	99	93			100		
cM capacity (veh/h)	286	320	731	296	311	649	1311			1218		

Direction, Lane #	WB 1	NB 1	SB 1
Volume Total	30	331	199
Volume Left	7	96	0
Volume Right	7	0	45
cSH	347	1311	1218
Volume to Capacity	0.09	0.07	0.00
Queue Length 95th (ft)	7	6	0
Control Delay (s)	16.4	2.8	0.0
Lane LOS	C	A	
Approach Delay (s)	16.4	2.8	0.0
Approach LOS	C		

Intersection Summary			
Average Delay	2.5		
Intersection Capacity Utilization	52.9%	ICU Level of Service	A
Analysis Period (min)	15		

Movement	EBL	EBT	EBR	WBL	WBT	WBR	NBL	NBT	NBR	SBL	SBT	SBR
Lane Configurations												
Ideal Flow (vphpl)	1900	1900	1900	1900	1900	1900	1900	1900	1900	1900	1900	1900
Lane Width	12	12	12	12	11	12	12	9	12	12	9	12
Total Lost time (s)					4.0			4.0			4.0	
Lane Util. Factor					1.00			1.00			1.00	
Frpb, ped/bikes					0.99			1.00			0.93	
Flpb, ped/bikes					1.00			1.00			1.00	
Frt					0.99			1.00			0.91	
Flt Protected					1.00			1.00			1.00	
Satd. Flow (prot)					1257			1190			1013	
Flt Permitted					1.00			0.99			1.00	
Satd. Flow (perm)					1257			1183			1013	
Volume (vph)	0	0	0	2	104	9	4	99	0	0	36	77
Peak-hour factor, PHF	0.77	0.77	0.77	0.77	0.77	0.77	0.77	0.77	0.77	0.77	0.77	0.77
Adj. Flow (vph)	0	0	0	3	135	12	5	129	0	0	47	100
RTOR Reduction (vph)	0	0	0	0	6	0	0	0	0	0	58	0
Lane Group Flow (vph)	0	0	0	0	144	0	0	134	0	0	89	0
Confl. Peds. (#/hr)	50		50	50		50	50		50	50		50
Parking (#/hr)	20	20	20	20	20	20	20	20	20	20	20	20
Turn Type				Perm			Perm					
Protected Phases					8			2			6	
Permitted Phases				8			2					
Actuated Green, G (s)					20.0			20.0			20.0	
Effective Green, g (s)					20.0			20.0			20.0	
Actuated g/C Ratio					0.42			0.42			0.42	
Clearance Time (s)					4.0			4.0			4.0	
Vehicle Extension (s)					3.0			3.0			3.0	
Lane Grp Cap (vph)					524			493			422	
v/s Ratio Prot											0.09	
v/s Ratio Perm					0.11			c0.11				
v/c Ratio					0.27			0.27			0.21	
Uniform Delay, d1					9.2			9.2			9.0	
Progression Factor					1.00			1.00			1.00	
Incremental Delay, d2					1.3			1.4			1.1	
Delay (s)					10.5			10.6			10.1	
Level of Service					B			B			B	
Approach Delay (s)		0.0			10.5			10.6			10.1	
Approach LOS		A			B			B			B	

Intersection Summary			
HCM Average Control Delay	10.4	HCM Level of Service	B
HCM Volume to Capacity ratio	0.27		
Actuated Cycle Length (s)	48.0	Sum of lost time (s)	8.0
Intersection Capacity Utilization	31.7%	ICU Level of Service	A
Analysis Period (min)	15		

c Critical Lane Group

Movement	EBL	EBT	EBR	WBL	WBT	WBR	NBL	NBT	NBR	SBL	SBT	SBR
Lane Configurations												
Sign Control		Stop			Stop			Stop			Stop	
Volume (vph)	9	0	4	20	165	7	1	15	0	0	7	2
Peak Hour Factor	0.83	0.83	0.83	0.83	0.83	0.83	0.83	0.83	0.83	0.83	0.83	0.83
Hourly flow rate (vph)	11	0	5	24	199	8	1	18	0	0	8	2

Direction, Lane #	EB 1	EB 2	WB 1	NB 1	SB 1
Volume Total (vph)	11	5	231	19	11
Volume Left (vph)	11	0	24	1	0
Volume Right (vph)	0	5	8	0	2
Hadj (s)	0.55	-0.65	0.05	0.06	-0.08
Departure Headway (s)	5.3	4.1	4.1	4.5	4.4
Degree Utilization, x	0.02	0.01	0.27	0.02	0.01
Capacity (veh/h)	671	859	861	750	765
Control Delay (s)	7.2	5.9	8.6	7.6	7.4
Approach Delay (s)	6.8		8.6	7.6	7.4
Approach LOS	A		A	A	A

Intersection Summary			
Delay	8.4		
HCM Level of Service	A		
Intersection Capacity Utilization	46.0%	ICU Level of Service	A
Analysis Period (min)	15		

Movement	EBL	EBT	EBR	WBL	WBT	WBR	NBL	NBT	NBR	SBL	SBT	SBR
Lane Configurations												
Sign Control		Stop			Stop			Free			Free	
Grade		0%			0%			0%			0%	
Volume (veh/h)	0	0	198	4	164	1	19	1	12	1	1	0
Peak Hour Factor	0.92	0.92	0.92	0.92	0.92	0.92	0.92	0.92	0.92	0.92	0.92	0.92
Hourly flow rate (vph)	0	0	215	4	178	1	21	1	13	1	1	0
Pedestrians		50			50			50			50	
Lane Width (ft)		12.0			12.0			8.0			8.0	
Walking Speed (ft/s)		4.0			4.0			4.0			4.0	
Percent Blockage		4			4			3			3	
Right turn flare (veh)												
Median type		None			None							
Median storage veh)												
Upstream signal (ft)												
pX, platoon unblocked												
vC, conflicting volume	242	159	101	367	152	108	51			64		
vC1, stage 1 conf vol												
vC2, stage 2 conf vol												
vCu, unblocked vol	242	159	101	367	152	108	51			64		
tC, single (s)	7.1	6.5	6.2	7.1	6.5	6.2	4.1			4.1		
tC, 2 stage (s)												
tF (s)	3.5	4.0	3.3	3.5	4.0	3.3	2.2			2.2		
p0 queue free %	100	100	76	99	73	100	99			100		
cM capacity (veh/h)	488	662	887	384	668	879	1484			1468		

Direction, Lane #	EB 1	WB 1	NB 1	SB 1
Volume Total	215	184	35	2
Volume Left	0	4	21	1
Volume Right	215	1	13	0
cSH	887	657	1484	1468
Volume to Capacity	0.24	0.28	0.01	0.00
Queue Length 95th (ft)	24	29	1	0
Control Delay (s)	10.4	12.6	4.5	3.7
Lane LOS	B	B	A	A
Approach Delay (s)	10.4	12.6	4.5	3.7
Approach LOS	B	B		

Intersection Summary			
Average Delay	10.8		
Intersection Capacity Utilization	51.7%	ICU Level of Service	A
Analysis Period (min)	15		

Future AM LOS

ATEC
Advanced Transportation
Engineering Consultants

Future PM LOS

ATEC
Advanced Transportation
Engineering Consultants

Movement	EBL	EBT	EBR	WBL	WBT	WBR	NBL	NBT	NBR	SBL	SBT	SBR
Lane Configurations												
Ideal Flow (vphpl)	1900	1900	1900	1900	1900	1900	1900	1900	1900	1900	1900	1900
Lane Width	12	12	12	12	12	12	12	11	12	12	11	12
Total Lost time (s)	4.0		4.0		4.0			4.0			4.0	
Lane Util. Factor	1.00		1.00		1.00			1.00			1.00	
Frpb, ped/bikes	1.00		0.88		0.96			1.00			0.96	
Flpb, ped/bikes	0.93		1.00		0.97			0.99			1.00	
Frt	1.00		0.85		0.95			1.00			0.95	
Flt Protected	0.95		1.00		0.98			0.99			1.00	
Satd. Flow (prot)	1170		992		1159			1268			1169	
Flt Permitted	0.65		1.00		0.98			0.95			1.00	
Satd. Flow (perm)	799		992		1159			1214			1169	
Volume (vph)	162	0	55	48	55	53	23	185	0	0	172	96
Peak-hour factor, PHF	0.92	0.92	0.92	0.92	0.92	0.92	0.92	0.92	0.92	0.92	0.92	0.92
Adj. Flow (vph)	176	0	60	52	60	58	25	201	0	0	187	104
RTOR Reduction (vph)	0	0	38	0	26	0	0	0	0	0	29	0
Lane Group Flow (vph)	176	0	22	0	144	0	0	226	0	0	262	0
Confl. Peds. (#/hr)	50		50	50		50	50		50	50		50
Parking (#/hr)	20	20	20	20	20	20	20	20		20	20	20
Turn Type	custom		custom	Perm			Perm					
Protected Phases					8			2			6	
Permitted Phases	4		4	8			2					
Actuated Green, G (s)	25.0		25.0		25.0			35.0			35.0	
Effective Green, g (s)	26.0		26.0		26.0			36.0			36.0	
Actuated g/C Ratio	0.37		0.37		0.37			0.51			0.51	
Clearance Time (s)	5.0		5.0		5.0			5.0			5.0	
Lane Grp Cap (vph)	297		368		430			624			601	
v/s Ratio Prot											c0.22	
v/s Ratio Perm	c0.22		0.02		0.12			0.19				
v/c Ratio	0.59		0.06		0.33			0.36			0.44	
Uniform Delay, d1	17.7		14.1		15.8			10.1			10.6	
Progression Factor	1.00		1.00		1.00			1.00			1.00	
Incremental Delay, d2	8.4		0.3		2.1			1.6			2.3	
Delay (s)	26.2		14.5		17.9			11.8			12.9	
Level of Service	C		B		B			B			B	
Approach Delay (s)		23.2			17.9			11.8			12.9	
Approach LOS		C			B			B			B	

Intersection Summary			
HCM Average Control Delay	16.2	HCM Level of Service	B
HCM Volume to Capacity ratio	0.50		
Actuated Cycle Length (s)	70.0	Sum of lost time (s)	8.0
Intersection Capacity Utilization	56.7%	ICU Level of Service	B
Analysis Period (min)	15		
c Critical Lane Group			

Movement	EBL	EBT	EBR	WBL	WBT	WBR	NBL	NBT	NBR	SBL	SBT	SBR
Lane Configurations												
Sign Control		Stop			Stop			Stop			Stop	
Volume (vph)	1	97	39	63	66	45	15	25	59	2	2	2
Peak Hour Factor	0.92	0.92	0.92	0.92	0.92	0.92	0.92	0.92	0.92	0.92	0.92	0.92
Hourly flow rate (vph)	1	105	42	68	72	49	16	27	64	2	2	2

Direction, Lane #	EB 1	WB 1	NB 1	SB 1
Volume Total (vph)	149	189	108	7
Volume Left (vph)	1	68	16	2
Volume Right (vph)	42	49	64	2
Hadj (s)	-0.12	-0.03	-0.28	-0.08
Departure Headway (s)	4.2	4.3	4.4	4.7
Degree Utilization, x	0.18	0.23	0.13	0.01
Capacity (veh/h)	817	804	764	695
Control Delay (s)	8.2	8.5	8.0	7.7
Approach Delay (s)	8.2	8.5	8.0	7.7
Approach LOS	A	A	A	A

Intersection Summary			
Delay	8.3		
HCM Level of Service	A		
Intersection Capacity Utilization	48.2%	ICU Level of Service	A
Analysis Period (min)	15		

Movement	EBL	EBT	EBR	WBL	WBT	WBR	NBL	NBT	NBR	SBL	SBT	SBR
Lane Configurations												
Ideal Flow (vphpl)	1900	1900	1900	1900	1900	1900	1900	1900	1900	1900	1900	1900
Lane Width	12	12	12	12	12	12	12	8	12	12	12	12
Total Lost time (s)		4.0			4.0			4.0			4.0	
Lane Util. Factor		1.00			1.00			1.00			1.00	
Frpb, ped/bikes		0.97			0.96			0.99			1.00	
Flpb, ped/bikes		0.99			1.00			1.00			0.99	
Frt		0.96			0.94			0.99			0.99	
Flt Protected		0.99			1.00			0.99			0.98	
Satd. Flow (prot)		1227			1191			1112			1271	
Flt Permitted		0.97			0.98			0.89			0.80	
Satd. Flow (perm)		1196			1175			1003			1031	
Volume (vph)	11	57	30	10	71	69	43	194	26	133	216	22
Peak-hour factor, PHF	0.92	0.92	0.92	0.92	0.92	0.92	0.92	0.92	0.92	0.92	0.92	0.92
Adj. Flow (vph)	12	62	33	11	77	75	47	211	28	145	235	24
RTOR Reduction (vph)	0	19	0	0	44	0	0	8	0	0	5	0
Lane Group Flow (vph)	0	88	0	0	120	0	0	278	0	0	399	0
Confl. Peds. (#/hr)	50		50	50		50	50		50	50		50
Parking (#/hr)	20	20	20	20	20	20	20	20	20	20	20	20
Turn Type	Perm			Perm			Perm			Perm		
Protected Phases		4			8			2			6	
Permitted Phases	4			8			2			6		
Actuated Green, G (s)		20.0			20.0			20.0			20.0	
Effective Green, g (s)		21.0			21.0			21.0			21.0	
Actuated g/C Ratio		0.42			0.42			0.42			0.42	
Clearance Time (s)		5.0			5.0			5.0			5.0	
Lane Grp Cap (vph)		502			494			421			433	
v/s Ratio Prot												
v/s Ratio Perm		0.07			c0.10			0.28			c0.39	
v/c Ratio		0.18			0.24			0.66			0.92	
Uniform Delay, d1		9.1			9.4			11.6			13.7	
Progression Factor		1.00			1.00			1.00			1.00	
Incremental Delay, d2		0.8			1.2			7.9			27.6	
Delay (s)		9.8			10.5			19.6			41.3	
Level of Service		A			B			B			D	
Approach Delay (s)		9.8			10.5			19.6			41.3	
Approach LOS		A			B			B			D	

Intersection Summary			
HCM Average Control Delay	26.1	HCM Level of Service	C
HCM Volume to Capacity ratio	0.58		
Actuated Cycle Length (s)	50.0	Sum of lost time (s)	8.0
Intersection Capacity Utilization	65.9%	ICU Level of Service	C
Analysis Period (min)	15		
c Critical Lane Group			

Movement	EBL	EBT	EBR	WBL	WBT	WBR	NBL	NBT	NBR	SBL	SBT	SBR
Lane Configurations												
Ideal Flow (vphpl)	1900	1900	1900	1900	1900	1900	1900	1900	1900	1900	1900	1900
Lane Width	12	8	12	12	10	12	12	8	12	12	8	12
Total Lost time (s)		4.0			4.0			4.0			4.0	
Lane Util. Factor		1.00			1.00			1.00			1.00	
Frpb, ped/bikes		0.98			0.97			0.96			0.99	
Flpb, ped/bikes		0.99			0.99			0.99			0.98	
Frt		0.97			0.96			0.95			0.99	
Flt Protected		0.99			0.99			1.00			0.99	
Satd. Flow (prot)		1069			1142			1042			1092	
Flt Permitted		0.97			0.98			0.98			0.93	
Satd. Flow (perm)		1042			1124			1029			1035	
Volume (vph)	4	13	5	12	67	30	4	21	14	21	45	4
Peak-hour factor, PHF	0.92	0.92	0.92	0.92	0.92	0.92	0.92	0.92	0.92	0.92	0.92	0.92
Adj. Flow (vph)	4	14	5	13	73	33	4	23	15	23	49	4
RTOR Reduction (vph)	0	3	0	0	20	0	0	9	0	0	2	0
Lane Group Flow (vph)	0	20	0	0	99	0	0	33	0	0	74	0
Confl. Peds. (#/hr)	50		50	50		50	50		50	50		50
Parking (#/hr)	20	20	20	20	20	20	20	20	20	20	20	20
Turn Type	Perm			Perm			Perm			Perm		
Protected Phases		4			8			2			6	
Permitted Phases	4			8			2			6		
Actuated Green, G (s)		15.0			15.0			15.0			15.0	
Effective Green, g (s)		15.0			15.0			15.0			15.0	
Actuated g/C Ratio		0.39			0.39			0.39			0.39	
Clearance Time (s)		4.0			4.0			4.0			4.0	
Lane Grp Cap (vph)		411			444			406			409	
v/s Ratio Prot												
v/s Ratio Perm		0.02			c0.09			0.03			c0.07	
v/c Ratio		0.05			0.22			0.08			0.18	
Uniform Delay, d1		7.1			7.6			7.2			7.5	
Progression Factor		1.00			1.00			1.00			1.00	
Incremental Delay, d2		0.2			1.2			0.4			1.0	
Delay (s)		7.3			8.8			7.6			8.5	
Level of Service		A			A			A			A	
Approach Delay (s)		7.3			8.8			7.6			8.5	
Approach LOS		A			A			A			A	

Intersection Summary			
HCM Average Control Delay	8.4	HCM Level of Service	A
HCM Volume to Capacity ratio	0.20		
Actuated Cycle Length (s)	38.0	Sum of lost time (s)	8.0
Intersection Capacity Utilization	25.1%	ICU Level of Service	A
Analysis Period (min)	15		
c Critical Lane Group			

Movement	WBL	WBR	NBT	NBR	SBL	SBT
Lane Configurations						
Sign Control	Stop		Stop			Stop
Volume (vph)	1	66	1	1	20	1
Peak Hour Factor	0.92	0.92	0.92	0.92	0.92	0.92
Hourly flow rate (vph)	1	72	1	1	22	1

Direction, Lane #	NB 1	SB 1
Volume Total (vph)	2	23
Volume Left (vph)	0	22
Volume Right (vph)	1	0
Hadj (s)	-0.25	0.24
Departure Headway (s)	3.7	4.1
Degree Utilization, x	0.00	0.03
Capacity (veh/h)	975	864
Control Delay (s)	6.7	7.3
Approach Delay (s)	6.7	7.3
Approach LOS	A	A

Intersection Summary			
Delay	Err		
HCM Level of Service	F		
Intersection Capacity Utilization	Err%	ICU Level of Service	H
Analysis Period (min)	15		

Movement	EBL	EBT	EBR	WBL	WBT	WBR	NBL	NBT	NBR	SBL	SBT	SBR
Lane Configurations												
Sign Control		Stop			Stop			Free			Free	
Grade		0%			0%			0%			0%	
Volume (veh/h)	22	62	8	33	5	12	18	180	18	24	212	40
Peak Hour Factor	0.92	0.92	0.92	0.92	0.92	0.92	0.92	0.92	0.92	0.92	0.92	0.92
Hourly flow rate (vph)	24	67	9	36	5	13	20	196	20	26	230	43
Pedestrians		50			50			50			50	
Lane Width (ft)		12.0			12.0			11.0			11.0	
Walking Speed (ft/s)		4.0			4.0			4.0			4.0	
Percent Blockage		4			4			4			4	
Right turn flare (veh)												
Median type		None			None							
Median storage veh)												
Upstream signal (ft)								1212			443	
pX, platoon unblocked												
vC, conflicting volume	665	659	352	691	671	305	324			265		
vC1, stage 1 conf vol												
vC2, stage 2 conf vol												
vCu, unblocked vol	665	659	352	691	671	305	324			265		
tC, single (s)	7.1	6.5	6.2	7.1	6.5	6.2	4.1			4.1		
tC, 2 stage (s)												
tF (s)	3.5	4.0	3.3	3.5	4.0	3.3	2.2			2.2		
p0 queue free %	92	80	99	86	98	98	98			98		
cM capacity (veh/h)	303	338	635	251	333	675	1179			1239		

Direction, Lane #	EB 1	WB 1	NB 1	SB 1
Volume Total	100	54	235	300
Volume Left	24	36	20	26
Volume Right	9	13	20	43
cSH	343	305	1179	1239
Volume to Capacity	0.29	0.18	0.02	0.02
Queue Length 95th (ft)	30	16	1	2
Control Delay (s)	19.8	19.4	0.8	0.9
Lane LOS	C	C	A	A
Approach Delay (s)	19.8	19.4	0.8	0.9
Approach LOS	C	C		

Intersection Summary			
Average Delay	5.1		
Intersection Capacity Utilization	41.6%	ICU Level of Service	A
Analysis Period (min)	15		

Movement	EBL	EBT	EBR	WBL	WBT	WBR	NBL	NBT	NBR	SBL	SBT	SBR
Lane Configurations												
Sign Control		Stop			Stop			Stop			Stop	
Volume (vph)	11	35	15	24	26	14	1	73	71	41	109	14
Peak Hour Factor	0.92	0.92	0.92	0.92	0.92	0.92	0.92	0.92	0.92	0.92	0.92	0.92
Hourly flow rate (vph)	12	38	16	26	28	15	1	79	77	45	118	15

Direction, Lane #	EB 1	WB 1	NB 1	SB 1
Volume Total (vph)	66	70	158	178
Volume Left (vph)	12	26	1	45
Volume Right (vph)	16	15	77	15
Hadj (s)	-0.06	-0.01	-0.24	0.05
Departure Headway (s)	4.7	4.7	4.2	4.5
Degree Utilization, x	0.09	0.09	0.18	0.22
Capacity (veh/h)	704	698	820	771
Control Delay (s)	8.1	8.2	8.1	8.7
Approach Delay (s)	8.1	8.2	8.1	8.7
Approach LOS	A	A	A	A

Intersection Summary			
Delay	8.4		
HCM Level of Service	A		
Intersection Capacity Utilization	48.0%	ICU Level of Service	A
Analysis Period (min)	15		

Movement	EBL	EBT	EBR	WBL	WBT	WBR	NBL	NBT	NBR	SBL	SBT	SBR
Lane Configurations												
Sign Control		Free			Free			Stop			Stop	
Grade		0%			0%			0%			0%	
Volume (veh/h)	5	17	11	12	47	21	8	34	3	12	42	1
Peak Hour Factor	0.92	0.92	0.92	0.92	0.92	0.92	0.92	0.92	0.92	0.92	0.92	0.92
Hourly flow rate (vph)	5	18	12	13	51	23	9	37	3	13	46	1
Pedestrians		50			50			50			50	
Lane Width (ft)		9.0			10.0			8.0			9.0	
Walking Speed (ft/s)		4.0			4.0			4.0			4.0	
Percent Blockage		3			3			3			3	
Right turn flare (veh)												
Median type								None			None	
Median storage veh)												
Upstream signal (ft)					452							
pX, platoon unblocked												
vC, conflicting volume	124			80			248	235	124	246	230	162
vC1, stage 1 conf vol												
vC2, stage 2 conf vol												
vCu, unblocked vol	124			80			248	235	124	246	230	162
tC, single (s)	4.1			4.1			7.1	6.5	6.2	7.1	6.5	6.2
tC, 2 stage (s)												
tF (s)	2.2			2.2			3.5	4.0	3.3	3.5	4.0	3.3
p0 queue free %	100			99			99	94	100	98	93	100
cM capacity (veh/h)	1411			1469			592	617	867	594	621	826

Direction, Lane #	EB 1	WB 1	NB 1	SB 1
Volume Total	36	87	49	60
Volume Left	5	13	9	13
Volume Right	12	23	3	1
cSH	1411	1469	624	618
Volume to Capacity	0.00	0.01	0.08	0.10
Queue Length 95th (ft)	0	1	6	8
Control Delay (s)	1.2	1.2	11.3	11.4
Lane LOS	A	A	B	B
Approach Delay (s)	1.2	1.2	11.3	11.4
Approach LOS			B	B

Intersection Summary			
Average Delay	6.0		
Intersection Capacity Utilization	30.6%	ICU Level of Service	A
Analysis Period (min)	15		

Movement	EBT	EBR	WBL	WBT	NBL	NBR
Lane Configurations						
Sign Control	Free			Free	Stop	
Grade	0%			0%	0%	
Volume (veh/h)	1	1	22	1	1	16
Peak Hour Factor	0.92	0.92	0.92	0.92	0.92	0.92
Hourly flow rate (vph)	1	1	24	1	1	17
Pedestrians	50			50	50	
Lane Width (ft)	12.0			9.0	12.0	
Walking Speed (ft/s)	4.0			4.0	4.0	
Percent Blockage	4			3	4	
Right turn flare (veh)						
Median type					None	
Median storage veh)						
Upstream signal (ft)						
pX, platoon unblocked						
vC, conflicting volume			52		151	102
vC1, stage 1 conf vol						
vC2, stage 2 conf vol						
vCu, unblocked vol			52		151	102
tC, single (s)			4.1		6.4	6.2
tC, 2 stage (s)						
tF (s)			2.2		3.5	3.3
p0 queue free %			98		100	98
cM capacity (veh/h)			1483		758	883

Direction, Lane #	EB 1	WB 1	NB 1
Volume Total	2	25	18
Volume Left	0	24	1
Volume Right	1	0	17
cSH	1700	1483	874
Volume to Capacity	0.00	0.02	0.02
Queue Length 95th (ft)	0	1	2
Control Delay (s)	0.0	7.1	9.2
Lane LOS		A	A
Approach Delay (s)	0.0	7.1	9.2
Approach LOS			A

Intersection Summary			
Average Delay	7.6		
Intersection Capacity Utilization	29.9%	ICU Level of Service	A
Analysis Period (min)	15		

Movement	EBL	EBT	EBR	WBL	WBT	WBR	NBL	NBT	NBR	SBL	SBT	SBR
Lane Configurations												
Sign Control		Free			Free			Stop			Stop	
Grade		0%			0%			0%			0%	
Volume (veh/h)	71	116	6	0	0	0	0	35	16	18	52	0
Peak Hour Factor	0.92	0.92	0.92	0.92	0.92	0.92	0.92	0.92	0.92	0.92	0.92	0.92
Hourly flow rate (vph)	77	126	7	0	0	0	0	38	17	20	57	0
Pedestrians		50			50			50			50	
Lane Width (ft)		11.0			0.0			9.0			11.0	
Walking Speed (ft/s)		4.0			4.0			4.0			4.0	
Percent Blockage		4			0			3			4	
Right turn flare (veh)												
Median type								None			None	
Median storage veh)												
Upstream signal (ft)												
pX, platoon unblocked												
vC, conflicting volume	50			183			412	384	229	420	387	100
vC1, stage 1 conf vol												
vC2, stage 2 conf vol												
vCu, unblocked vol	50			183			412	384	229	420	387	100
tC, single (s)	4.1			4.1			7.1	6.5	6.2	7.1	6.5	6.2
tC, 2 stage (s)												
tF (s)	2.2			2.2			3.5	4.0	3.3	3.5	4.0	3.3
p0 queue free %	95			100			100	92	98	96	88	100
cM capacity (veh/h)	1491			1343			425	484	782	437	482	881

Direction, Lane #	EB 1	NB 1	SB 1
Volume Total	210	55	76
Volume Left	77	0	20
Volume Right	7	17	0
cSH	1491	550	470
Volume to Capacity	0.05	0.10	0.16
Queue Length 95th (ft)	4	8	14
Control Delay (s)	3.0	12.3	14.1
Lane LOS	A	B	B
Approach Delay (s)	3.0	12.3	14.1
Approach LOS		B	B

Intersection Summary			
Average Delay	7.0		
Intersection Capacity Utilization	37.9%	ICU Level of Service	A
Analysis Period (min)	15		

Movement	EBL	EBT	EBR	WBL	WBT	WBR	NBL	NBT	NBR	SBL	SBT	SBR
Lane Configurations												
Sign Control		Stop			Stop			Stop			Stop	
Volume (vph)	5	158	16	0	0	0	15	37	23	16	45	5
Peak Hour Factor	0.92	0.92	0.92	0.92	0.92	0.92	0.92	0.92	0.92	0.92	0.92	0.92
Hourly flow rate (vph)	5	172	17	0	0	0	16	40	25	17	49	5

Direction, Lane #	EB 1	NB 1	SB 1
Volume Total (vph)	195	82	72
Volume Left (vph)	5	16	17
Volume Right (vph)	17	25	5
Hadj (s)	0.00	-0.09	0.05
Departure Headway (s)	4.3	4.3	4.5
Degree Utilization, x	0.23	0.10	0.09
Capacity (veh/h)	819	786	754
Control Delay (s)	8.5	7.8	7.9
Approach Delay (s)	8.5	7.8	7.9
Approach LOS	A	A	A

Intersection Summary			
Delay		8.2	
HCM Level of Service		A	
Intersection Capacity Utilization		34.0%	ICU Level of Service A
Analysis Period (min)		15	

Movement	WBL	WBR	NBT	NBR	SBL	SBT
Lane Configurations						
Sign Control	Stop		Free			Free
Grade	0%		0%			0%
Volume (veh/h)	20	1	24	29	149	23
Peak Hour Factor	0.92	0.92	0.92	0.92	0.92	0.92
Hourly flow rate (vph)	22	1	26	32	162	25
Pedestrians	50		50			50
Lane Width (ft)	9.0		8.0			8.0
Walking Speed (ft/s)	4.0		4.0			4.0
Percent Blockage	3		3			3
Right turn flare (veh)						
Median type	None					
Median storage veh)						
Upstream signal (ft)						
pX, platoon unblocked						
vC, conflicting volume	491	142			108	
vC1, stage 1 conf vol						
vC2, stage 2 conf vol						
vCu, unblocked vol	491	142			108	
tC, single (s)	6.4	6.2			4.1	
tC, 2 stage (s)						
tF (s)	3.5	3.3			2.2	
p0 queue free %	95	100			89	
cM capacity (veh/h)	447	851			1431	

Direction, Lane #	WB 1	NB 1	SB 1
Volume Total	23	58	187
Volume Left	22	0	162
Volume Right	1	32	0
cSH	457	1700	1431
Volume to Capacity	0.05	0.03	0.11
Queue Length 95th (ft)	4	0	10
Control Delay (s)	13.3	0.0	6.9
Lane LOS	B		A
Approach Delay (s)	13.3	0.0	6.9
Approach LOS	B		

Intersection Summary			
Average Delay	6.0		
Intersection Capacity Utilization	35.3%	ICU Level of Service	A
Analysis Period (min)	15		

Movement	EBL	EBT	EBR	WBL	WBT	WBR	NBL	NBT	NBR	SBL	SBT	SBR
Lane Configurations												
Sign Control		Stop			Stop			Free			Free	
Grade		0%			0%			0%			0%	
Volume (veh/h)	34	19	83	0	0	0	0	264	20	26	279	0
Peak Hour Factor	0.92	0.92	0.92	0.92	0.92	0.92	0.92	0.92	0.92	0.92	0.92	0.92
Hourly flow rate (vph)	37	21	90	0	0	0	0	287	22	28	303	0
Pedestrians		50			50			50			50	
Lane Width (ft)		8.0			12.0			11.0			11.0	
Walking Speed (ft/s)		4.0			4.0			4.0			4.0	
Percent Blockage		3			4			4			4	
Right turn flare (veh)												
Median type		None			None							
Median storage veh)												
Upstream signal (ft)								398			1257	
pX, platoon unblocked												
vC, conflicting volume	758	768	403	858	758	398	353			359		
vC1, stage 1 conf vol												
vC2, stage 2 conf vol												
vCu, unblocked vol	758	768	403	858	758	398	353			359		
tC, single (s)	7.1	6.5	6.2	7.1	6.5	6.2	4.1			4.1		
tC, 2 stage (s)												
tF (s)	3.5	4.0	3.3	3.5	4.0	3.3	2.2			2.2		
p0 queue free %	87	93	85	100	100	100	100			98		
cM capacity (veh/h)	280	300	603	191	305	599	1167			1145		

Direction, Lane #	EB 1	WB 1	WB 2	NB 1	SB 1
Volume Total	148	0	0	309	332
Volume Left	37	0	0	0	28
Volume Right	90	0	0	22	0
cSH	422	1700	1700	1700	1145
Volume to Capacity	0.35	0.00	0.00	0.18	0.02
Queue Length 95th (ft)	39	0	0	0	2
Control Delay (s)	18.0	0.0	0.0	0.0	0.9
Lane LOS	C	A	A		A
Approach Delay (s)	18.0	0.0		0.0	0.9
Approach LOS	C	A			

Intersection Summary			
Average Delay	3.8		
Intersection Capacity Utilization	62.9%	ICU Level of Service	B
Analysis Period (min)	15		

Movement	EBL	EBT	EBR	WBL	WBT	WBR	NBL	NBT	NBR	SBL	SBT	SBR
Lane Configurations												
Sign Control		Stop			Stop			Free			Free	
Grade		0%			0%			0%			0%	
Volume (veh/h)	0	0	0	13	28	16	111	204	0	0	297	49
Peak Hour Factor	0.92	0.92	0.92	0.92	0.92	0.92	0.92	0.92	0.92	0.92	0.92	0.92
Hourly flow rate (vph)	0	0	0	14	30	17	121	222	0	0	323	53
Pedestrians		50			50			50			50	
Lane Width (ft)		0.0			12.0			11.0			11.0	
Walking Speed (ft/s)		4.0			4.0			4.0			4.0	
Percent Blockage		0			4			4			4	
Right turn flare (veh)												
Median type		None			None							
Median storage veh)												
Upstream signal (ft)								795			860	
pX, platoon unblocked												
vC, conflicting volume	945	912	449	912	939	322	426			272		
vC1, stage 1 conf vol												
vC2, stage 2 conf vol												
vCu, unblocked vol	945	912	449	912	939	322	426			272		
tC, single (s)	7.1	6.5	6.2	7.1	6.5	6.2	4.1			4.1		
tC, 2 stage (s)												
tF (s)	3.5	4.0	3.3	3.5	4.0	3.3	2.2			2.2		
p0 queue free %	100	100	100	93	86	97	89			100		
cM capacity (veh/h)	180	233	584	208	225	661	1128			1232		

Direction, Lane #	WB 1	NB 1	SB 1
Volume Total	62	342	376
Volume Left	14	121	0
Volume Right	17	0	53
cSH	270	1128	1232
Volume to Capacity	0.23	0.11	0.00
Queue Length 95th (ft)	22	9	0
Control Delay (s)	22.3	3.7	0.0
Lane LOS	C	A	
Approach Delay (s)	22.3	3.7	0.0
Approach LOS	C		

Intersection Summary			
Average Delay	3.4		
Intersection Capacity Utilization	62.9%	ICU Level of Service	B
Analysis Period (min)	15		

Movement	EBL	EBT	EBR	WBL	WBT	WBR	NBL	NBT	NBR	SBL	SBT	SBR
Lane Configurations												
Ideal Flow (vphpl)	1900	1900	1900	1900	1900	1900	1900	1900	1900	1900	1900	1900
Lane Width	12	12	12	12	11	12	12	9	12	12	9	12
Total Lost time (s)					4.0			4.0			4.0	
Lane Util. Factor					1.00			1.00			1.00	
Frpb, ped/bikes					0.99			1.00			0.94	
Flpb, ped/bikes					0.99			0.99			1.00	
Frt					0.99			1.00			0.92	
Flt Protected					0.99			0.99			1.00	
Satd. Flow (prot)					1242			1176			1029	
Flt Permitted					0.99			0.96			1.00	
Satd. Flow (perm)					1242			1140			1029	
Volume (vph)	0	0	0	22	119	9	15	91	0	0	54	88
Peak-hour factor, PHF	0.92	0.92	0.92	0.92	0.92	0.92	0.92	0.92	0.92	0.92	0.92	0.92
Adj. Flow (vph)	0	0	0	24	129	10	16	99	0	0	59	96
RTOR Reduction (vph)	0	0	0	0	5	0	0	0	0	0	56	0
Lane Group Flow (vph)	0	0	0	0	158	0	0	115	0	0	99	0
Confl. Peds. (#/hr)	50		50	50		50	50		50	50		50
Parking (#/hr)	20	20	20	20	20	20	20	20	20	20	20	20
Turn Type				Perm			Perm					
Protected Phases					8			2			6	
Permitted Phases				8			2					
Actuated Green, G (s)					20.0			20.0			20.0	
Effective Green, g (s)					20.0			20.0			20.0	
Actuated g/C Ratio					0.42			0.42			0.42	
Clearance Time (s)					4.0			4.0			4.0	
Vehicle Extension (s)					3.0			3.0			3.0	
Lane Grp Cap (vph)					518			475			429	
v/s Ratio Prot											0.10	
v/s Ratio Perm					0.13			c0.10				
v/c Ratio					0.31			0.24			0.23	
Uniform Delay, d1					9.4			9.1			9.0	
Progression Factor					1.00			1.00			1.00	
Incremental Delay, d2					1.5			1.2			1.3	
Delay (s)					10.9			10.3			10.3	
Level of Service					B			B			B	
Approach Delay (s)		0.0			10.9			10.3			10.3	
Approach LOS		A			B			B			B	

Intersection Summary			
HCM Average Control Delay	10.5	HCM Level of Service	B
HCM Volume to Capacity ratio	0.27		
Actuated Cycle Length (s)	48.0	Sum of lost time (s)	8.0
Intersection Capacity Utilization	41.9%	ICU Level of Service	A
Analysis Period (min)	15		

c Critical Lane Group

Movement	EBL	EBT	EBR	WBL	WBT	WBR	NBL	NBT	NBR	SBL	SBT	SBR
Lane Configurations												
Sign Control		Stop			Stop			Stop			Stop	
Volume (vph)	7	0	4	38	170	12	5	33	0	0	24	0
Peak Hour Factor	0.92	0.92	0.92	0.92	0.92	0.92	0.92	0.92	0.92	0.92	0.92	0.92
Hourly flow rate (vph)	8	0	4	41	185	13	5	36	0	0	26	0

Direction, Lane #	EB 1	EB 2	WB 1	NB 1	SB 1
Volume Total (vph)	8	4	239	41	26
Volume Left (vph)	8	0	41	5	0
Volume Right (vph)	0	4	13	0	0
Hadj (s)	0.55	-0.65	0.05	0.08	0.05
Departure Headway (s)	5.4	4.2	4.2	4.6	4.6
Degree Utilization, x	0.01	0.01	0.28	0.05	0.03
Capacity (veh/h)	652	829	837	741	736
Control Delay (s)	7.2	6.0	8.9	7.8	7.7
Approach Delay (s)	6.8		8.9	7.8	7.7
Approach LOS	A		A	A	A

Intersection Summary			
Delay	8.6		
HCM Level of Service	A		
Intersection Capacity Utilization	46.4%	ICU Level of Service	A
Analysis Period (min)	15		

Movement	EBL	EBT	EBR	WBL	WBT	WBR	NBL	NBT	NBR	SBL	SBT	SBR
Lane Configurations												
Sign Control		Stop			Stop			Free			Free	
Grade		0%			0%			0%			0%	
Volume (veh/h)	0	0	161	4	164	1	19	1	16	1	1	0
Peak Hour Factor	0.92	0.92	0.92	0.92	0.92	0.92	0.92	0.92	0.92	0.92	0.92	0.92
Hourly flow rate (vph)	0	0	175	4	178	1	21	1	17	1	1	0
Pedestrians		50			50			50			50	
Lane Width (ft)		12.0			9.0			8.0			8.0	
Walking Speed (ft/s)		4.0			4.0			4.0			4.0	
Percent Blockage		4			3			3			3	
Right turn flare (veh)												
Median type		None			None							
Median storage veh)												
Upstream signal (ft)												
pX, platoon unblocked												
vC, conflicting volume	245	163	101	329	154	110	51			68		
vC1, stage 1 conf vol												
vC2, stage 2 conf vol												
vCu, unblocked vol	245	163	101	329	154	110	51			68		
tC, single (s)	7.1	6.5	6.2	7.1	6.5	6.2	4.1			4.1		
tC, 2 stage (s)												
tF (s)	3.5	4.0	3.3	3.5	4.0	3.3	2.2			2.2		
p0 queue free %	100	100	80	99	74	100	99			100		
cM capacity (veh/h)	491	666	887	440	673	886	1484			1479		

Direction, Lane #	EB 1	WB 1	NB 1	SB 1
Volume Total	175	184	39	2
Volume Left	0	4	21	1
Volume Right	175	1	17	0
cSH	887	666	1484	1479
Volume to Capacity	0.20	0.28	0.01	0.00
Queue Length 95th (ft)	18	28	1	0
Control Delay (s)	10.1	12.5	4.0	3.7
Lane LOS	B	B	A	A
Approach Delay (s)	10.1	12.5	4.0	3.7
Approach LOS	B	B		

Intersection Summary			
Average Delay	10.5		
Intersection Capacity Utilization	49.2%	ICU Level of Service	A
Analysis Period (min)	15		