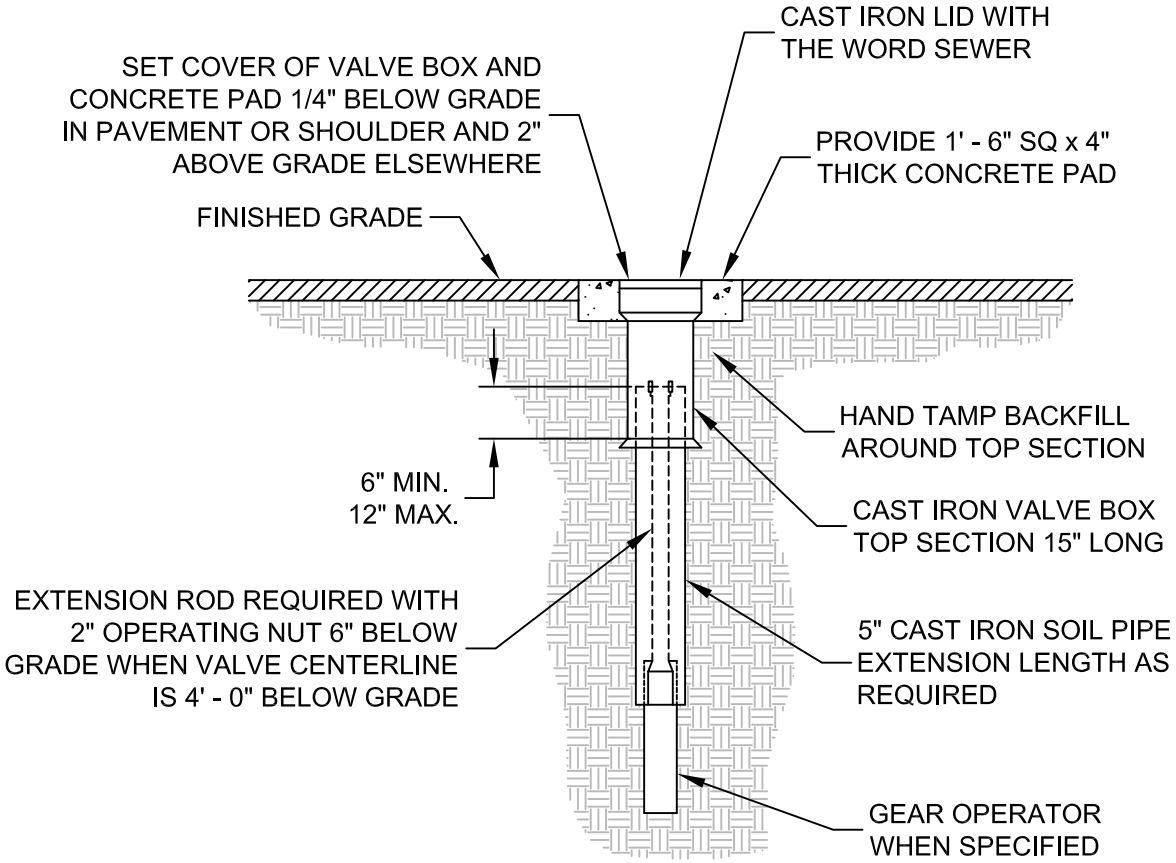

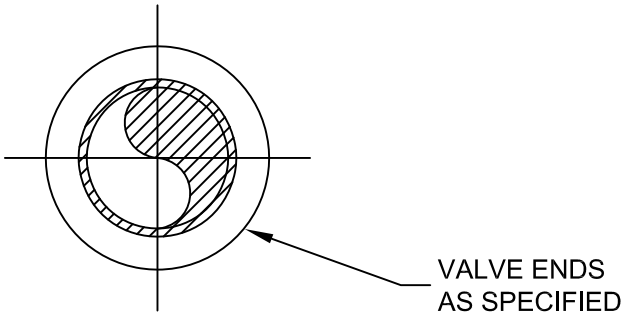

City of Key West Engineering Services 3132 Flagler Avenue, Key West, FL 33040	TITLE BURIED PLUG VALVE SETTING		
	DRAWN JTJ SCALE NTS	DETAIL	JUL 2015 DETAIL 19