# CITY OF KEY WEST
# KEY WEST, FL

# BULKHEAD 497 REPAIRS
# CONTRACT NO. TBD

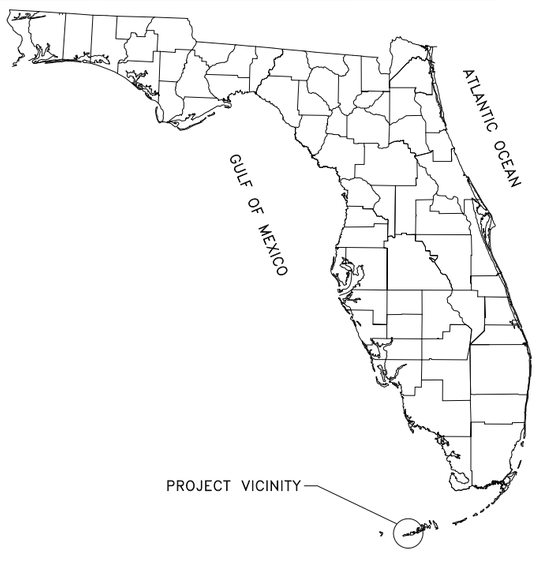


LIST OF DRAWINGS

| SHEET | SHT NO. | NAVFAC DWG NO. | DRAWING TITLE |
|---|---|---|---|
| G-001 | 1 OF 18 | 10005478 | TITLE SHEET |
| G-002 | 2 OF 18 | 10005479 | GENERAL NOTES |
| G-101 | 3 OF 18 | 10005480 | STAGING PLAN |
| B-001 | 4 OF 18 | 10005481 | BORING LOGS |
| C-101 | 5 OF 18 | 10005482 | WORK PLAN |
| C-102 | 6 OF 18 | 10005483 | EXISTING CONDITIONS PLAN |
| C-103 | 7 OF 18 | 10005484 | SURVEY PLAN |
| C-301 | 8 OF 18 | 10005485 | EXISTING CONDITIONS SECTION |
| C-501 | 9 OF 18 | 10005486 | EXISTING PILE CAP DETAILS |
| C-901 | 10 OF 18 | 10005487 | PHOTOGRAPHS |
| S-101 | 11 OF 18 | 10005488 | ROCK ANCHOR PLAN |
| S-301 | 12 OF 18 | 10005489 | TYPICAL REPAIR SECTION |
| S-501 | 13 OF 18 | 10005490 | CONCRETE PILE CAP DETAILS |
| S-502 | 14 OF 18 | 10005491 | SHEET PILE CONNECTION DETAILS |
| S-503 | 15 OF 18 | 10005492 | GROIN DETAILS |
| S-504 | 16 OF 18 | 10005493 | PAVING DETAILS |
| E-101 | 17 OF 18 | 10005813 | ELECTRICAL AND TELECOMMUNICATIONS PLAN |
| E-501 | 18 OF 18 | 10005814 | ELECTRICAL AND TELECOMMUNICATIONS DETAILS |

REFERENCE DRAWINGS

TRUMAN HARBOR REPAIRS BY URS GROUP, INC. DATED 3/05

LEGEND

| | |
|---|---|
| ALUM | ALUMINUM |
| APPROX | APPROXIMATELY |
| ℄ | CENTERLINE |
| CF | CUBIC FEET |
| CONT. | CONTINUOUS |
| CY | CUBIC YARDS |
| DIA | DIAMETER |
| EQ. | EQUAL |
| GALV. | GALVANIZED |
| HDG | HOT DIPPED GALVANIZED |
| LF | LINEAR FEET |
| LOW | LIMITS OF WORK |
| MAX | MAXIMUM |
| MIN | MINIMUM |
| MISC | MISCELLANEOUS |
| PL | PLATE |
| QTY | QUANTITY |
| SP. | SPACED |
| SSP | STEEL SHEET PILE |
| TN | TON |
| TBD | TO BE DETERMINED |
| TYP | TYPICAL |

ELEVATION, SECTION OR DETAIL SYMBOLS

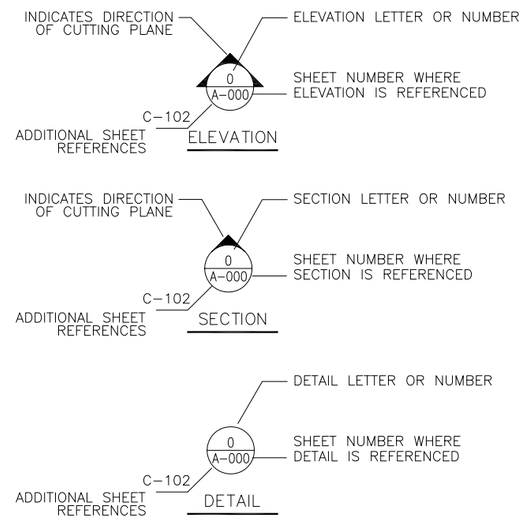



Appledore Marine Engineering Inc.
600 STATE STREET, SUITE E
PORTSMOUTH, NEW HAMPSHIRE 03801
(603) 766-1870 amel@appledoremarine.com


| APPR | DATE | DESCRIPTION | SYM |
|---|---|---|---|
| | | | |

NAVFAC

ROBERT M. SNOVER LICENSE No. 72734 STATE OF FLORIDA PROFESSIONAL ENGINEER
SEAL

A/E FIRM NAME AND ADDRESS: Appledore Marine Engineering Inc. 600 State Street, Suite E Portsmouth, New Hampshire 03801

DSGN: JG/GG DRWN: SNB CHK: RMS

SUPV:

PRJMGR. | CIV. STR.

MECH. | ARCH.

ELEC.

SUBMITTED BY:

PRES. 12/23/2011
(SIGNED) (TITLE) (DATE)

A/E INFO

APPROVED

FOR COMMANDER NAVFAC / B.L.T.L.

ACTIVITY

SATISFACTORY TO DATE

DES · | DRW · | CHK ·

PROJECT MANAGER ·

IPT TECH. BRANCH HEAD ·

CHIEF ENG/ARCH (CORE) ·

DEPARTMENT OF THE NAVY
NAVAL FACILITIES ENGINEERING COMMAND
OCEAN CONSTRUCTION DIVISION
NAVAL FACILITIES ENGINEERING COMMAND SOUTHEAST
EAST COAST DET.
NAVAL AIR STATION
KEY WEST, FLORIDA

BULKHEAD 497 REPAIRS

TITLE SHEET

SCALE: SCALE

EPROJECT NO.: ·

CONSTR. CONTR. NO.
N62473-06-D-3004

NAVFAC DRAWING NO.
10005478

SHEET 1 OF 18

G-001

DRAWFORM REVISION: 7 AUGUST 2009


FILE NAME: O:\502422 - USN Key West Central Mole Pier Corof\05 Supporting Documents\Drawings\G-001.dwg LAYOUT NAME: G-001 PLOTTED: Wednesday, January 04, 2012 - 8:21am USER: bsullivan

DESIGN CRITERIA:

THE BULKHEAD DESIGN IS BASED ON THE FOLLOWING:

A. 600 PSF UNIFORMLY DISTRIBUTED LIVE LOAD
B. AASHTO HS–20 VEHICULAR LOADING

GENERAL:

1. THE CONTRACTOR IS ADVISED THAT THE SPECIFICATIONS FORM A PART OF THE CONTRACT DOCUMENTS AND ALL WORK SHALL BE PERFORMED IN ACCORDANCE WITH THE SPECIFICATIONS AND DRAWINGS. THE CONTRACTOR SHALL KEEP A COPY OF THE DRAWINGS AND THE SPECIFICATIONS ON SITE AT ALL TIMES DURING PERFORMANCE OF THE WORK.

2. ELEVATIONS ARE IN FEET BASED ON MEAN LOWER LOW WATER (MLLW) PROJECT DATUM FOR THE 1983–2001 TIDAL EPOCH.

3. ALL NORTH ARROWS SHOWN ARE GRID NORTH BASED ON FLORIDA EAST ZONE, NAD83.

4. DIMENSIONS AND DETAILS OF THE EXISTING ELEMENTS ARE BASED ON ARCHIVE DRAWINGS FURNISHED BY THE GOVERNMENT. WORK RELATED DIMENSIONS AND DETAILS OF THE EXISTING ELEMENTS SHALL BE FIELD VERIFIED BY THE CONTRACTOR. DISCREPANCIES SHALL BE BROUGHT TO THE ATTENTION OF THE CONTRACTING OFFICER AND OR ADJUSTED BEFORE ORDERING MATERIALS AND PROCEEDING WITH THE WORK.

5. THE EXACT SIZE AND LOCATION OF ALL EXISTING UTILITIES SHALL BE FIELD VERIFIED BY THE CONTRACTOR PRIOR TO START OF CONSTRUCTION. ALL CONSTRUCTION SHALL BE COORDINATED WITH THE CONTRACTING OFFICER.

6. IT IS THE CONTRACTOR'S RESPONSIBILITY TO DETERMINE CONSTRUCTION PROCEDURES AND SEQUENCE TO ENSURE THE SAFETY OF THE FACILITIES. THE CONTRACTOR IS RESPONSIBLE TO ERECT, MAINTAIN AND REMOVE TEMPORARY ERECTION MATERIALS AND EQUIPMENT. ALL PROPOSED STAGING AREAS SHALL BE COORDINATED WITH THE CONTRACTING OFFICER BEFORE STARTING THE WORK.

7. CONTRACTOR SHALL MAINTAIN ADEQUATE SURVEY CONTROL AT ALL TIMES TO ESTABLISH AND MAINTAIN ALL LINES AND ELEVATIONS.

8. THE CONTRACTOR IS RESPONSIBLE FOR ALL DAMAGE DONE TO STRUCTURES AND VESSELS OR INJURIES TO THE PUBLIC AS A RESULT OF PERFORMING THE WORK.

9. THE CONTRACTOR SHALL PROVIDE AND MAINTAIN ENVIRONMENTAL CONTROLS AS REQUIRED BY FEDERAL, STATE AND MUNICIPAL REGULATIONS AND PERMITS. ENVIRONMENTAL CONTROLS SHALL INCLUDE BUT NOT BE LIMITED TO EROSION, TURBIDITY AND DUST.

10. THE CONTRACTOR SHALL FOLLOW ALL APPLICABLE FEDERAL, STATE AND MUNICIPAL REGULATIONS, INCLUDING THE FEDERAL DEPARTMENT OF LABOR, SAFETY, HEALTH ACT, U.S. ARMY CORPS OF ENGINEERS, STATE/LOCAL WETLANDS CONTROL, AND PERMITS.

11. THE CONTRACTOR SHALL SCHEDULE AND COORDINATE ALL WORK, INCLUDING ALLOWABLE WORK WINDOWS, WITH FACILITY PERSONNEL, AND SHALL MAINTAIN THE WORK SITE TO THE SATISFACTION OF THE CONTRACTING OFFICER.

12. STORAGE, FUELING AND LUBRICATION OF EQUIPMENT AND MOTOR VEHICLES SHALL BE CONDUCTED IN A MANNER THAT AFFORDS THE MAXIMUM PROTECTION AGAINST SPILL AND EVAPORATION. FUEL, LUBRICANTS AND OIL SHALL BE MANAGED AND STORED IN ACCORDANCE WITH ALL FEDERAL, STATE, REGIONAL, AND LOCAL LAWS AND REGULATIONS. THERE SHALL BE NO STORAGE OF FUEL ON THE PROJECT SITE. FUEL MUST BE BROUGHT TO THE PROJECT SITE AS NEEDED. EQUIPMENT OPERATION, ACTIVITIES, OR PROCESSES PERFORMED BY THE CONTRACTOR SHALL BE IN ACCORDANCE WITH ALL FEDERAL AND STATE AIR EMISSION AND PERFORMANCE LAWS AND STANDARDS.

13. CONTRACTOR SHALL MAINTAIN TRAFFIC ALONG ROADWAYS AND GATES AT ALL TIMES AND PROVIDE NECESSARY TRAFFIC CONTROL SIGNS AND BARRICADES WHEN WORKING WITHIN ROADWAYS.

14. THE USE OF EXPLOSIVES OR BLASTING SHALL NOT BE PERMITTED.

15. SILT BARRIERS SHALL BE PROVIDED AROUND ALL DEMOLITION OPERATIONS TAKING PLACE IN THE WATER AS NECESSARY TO MEET AND MAINTAIN STATE WATER QUALITY STANDARDS. WHERE DEMOLITION OPERATIONS ON SHORE WILL RESULT IN SURFACE RUNOFF OR HAZARDOUS SUBSTANCES ENTERING A BODY OF WATER. SILT BARRIERS SHALL BE PROVIDED TO ENCLOSE THE POINT OF ENTRY INTO THE BODY OF WATER TO PREVENT THE CONTAMINANTS FROM DISPERSING.

16. ALL ITEMS INDICATED TO BE DEMOLISHED SHALL BECOME THE PROPERTY OF THE CONTRACTOR AND SHALL BE REMOVED FROM GOVERNMENT PROPERTY, UNLESS OTHERWISE NOTED.

17. THE CONTRACTOR SHALL MAINTAIN AN ACCESS ROUTE FOR VEHICLES TO THE OUTER MOLE AT ALL TIMES.

18. EXITING MANHOLES WITHIN PROJECT AREA ARE LIKELY FILLED WITH WATER AND SHALL BE PUMPED DRY BY THE CONTRACTOR PRIOR TO UTILITY WORK.

SURVEY:

1. UTILITIES SHOWN ARE APPROXIMATE. CONSULT WITH THE PROPER AUTHORITIES FOR LOCATION AND INFORMATION. CONTRACTOR SHALL ASSUME THAT ACTIVE AND ABANDONED UTILITIES, ADDITIONAL TO THOSE SHOWN IN THE DRAWINGS, EXIST AND SHALL BE SUPPORTED OR CUT AND CAPPED AT THE DIRECTION OF THE CONTRACTING OFFICER.

DEMOLITION:

1. THE CONTRACTOR SHALL PROVIDE CONTROL MEASURES AS REQUIRED BY ENVIRONMENTAL REGULATIONS AND AS REQUIRED TO PREVENT DEBRIS FROM ENTERING THE WATER. UNDERWATER INSPECTIONS MAY BE CONDUCTED BY THE GOVERNMENT TO ENSURE THE CONTRACTOR HAS REMOVED ALL DEMOLITION AND CONSTRUCTION DEBRIS FROM THE WATER.

2. PREVENT THE SPREAD OF DUST AND DEBRIS AND AVOID THE CREATION OF A NUISANCE OR HAZARD IN THE SURROUNDING AREA. DO NOT USE WATER IF IT RESULTS IN HAZARDOUS OR OBJECTIONABLE CONDITIONS SUCH AS, BUT NOT LIMITED TO, FLOODING OR POLLUTION.

3. WHERE PEDESTRIAN AND DRIVER SAFETY IS ENDANGERED IN THE AREA OF REMOVAL WORK, USE TRAFFIC BARRICADES WITH FLASHING LIGHTS. ANCHOR BARRICADES IN A MANNER TO PREVENT DISPLACEMENT BY WIND. NOTIFY FACILITY PERSONNEL PRIOR TO BEGINNING SUCH WORK.

4. THE CONTRACTOR SHALL OBTAIN PERMISSION FROM THE FACILITY EACH DAY BEFORE WELDING OR TORCH CUTTING WORK IS PERFORMED.

5. ALL MATERIAL REMOVED AND NOT REUSED SHALL BECOME THE PROPERTY OF THE CONTRACTOR AND SHALL BE REMOVED DAILY FROM THE GOVERNMENT'S PROPERTY OR PROPERLY STORED IN AN APPROVED LOCATION ON SITE. REMOVED MATERIAL SHALL BE DISPOSED OF IN ACCORDANCE WITH ALL LOCAL, STATE, AND FEDERAL LAWS.

6. CONTRACTOR SHALL PROTECT EXISTING UTILITIES AND WORK WHICH ARE TO REMAIN IN PLACE, BE REUSED, OR REMAIN THE PROPERTY OF THE GOVERNMENT.

7. CONTRACTOR SHALL NOT OBSTRUCT ACCESS TO NAVY VESSELS/CRUISE SHIPS AND BUILDINGS DURING PERFORMANCE OF THE WORK.

8. WHERE REMOVALS LEAVE HOLES AND DAMAGED SURFACES EXPOSED IN THE FINISHED WORK, PATCH AND REPAIR THESE HOLES AND DAMAGED SURFACES TO MATCH ADJACENT FINISHED SURFACES. FINISHED SURFACES OF PATCHED AREA SHALL BE FLUSH WITH ADJACENT EXISTING SURFACE AND SHALL MATCH THE EXISTING ADJACENT SURFACE AS CLOSELY AS POSSIBLE AS TO TEXTURE AND FINISH. APPLY PATCHING MATERIAL IN ACCORDANCE WITH THE MANUFACTURER'S PRINTED INSTRUCTIONS.

9. REMOVE MARINE GROWTH AND OTHER BOND INHIBITING SUBSTANCES FROM ALL SURFACES IN CONTACT WITH REPAIR WORK USING HIGH PRESSURE WATER SPRAY OR OTHER APPROVED METHODS.

STEEL:

1. ALL STRUCTURAL STEEL CONSTRUCTION SHALL BE IN ACCORDANCE WITH THE LATEST EDITION OF THE AMERICAN INSTITUTE OF STEEL CONSTRUCTION (AISC) STEEL CONSTRUCTION MANUAL.

2. ALL STRUCTURAL STEEL SHAPES AND PLATES SHALL BE ASTM A36 OR A–572, UNLESS OTHERWISE NOTED.

3. BOLTS SHALL CONFORM TO ASTM A–307 LATEST EDITION. NUTS SHALL CONFORM TO ASTM A–572, LATEST EDITION.

4. ALL WELDING SHALL BE IN ACCORDANCE WITH THE STRUCTURAL WELDING CODE, D1.1 AND D3.6 OF THE AWS. ELECTRODES SHALL BE E70XX LOW HYDROGEN IN ACCORDANCE WITH AWS SPECIFICATIONS.

5. ALL EXISTING STEEL SHEET PILING TO BE CONCRETE ENCAPSULATED AND STEEL SHEET PILING TO RECEIVE WELDING SHALL BE CLEANED TO REMOVE ALL LOOSE SCALE, RUST AND MARINE GROWTH DOWN TO BARE METAL.

TIDAL DATUMS

| | |
|---|---|
| ESTIMATED 100–YEAR FLOOD ELEVATION (STILLWATER) | 8.4' |
| HIGHEST OBSERVED WATER LEVEL (9/8/1965) | 3.7' |
| MEAN HIGHER HIGH WATER (MHHW) | 1.8' |
| NORTH AMERICAN VERTICAL DATUM – 1988 (NAVD) | 1.8' |
| MEAN HIGH WATER (MHW) | 1.5' |
| MEAN LOW WATER (MLW) | 0.2' |
| MEAN LOWER LOW WATER (MLLW) | 0.0' |
| LOWEST OBSERVED WATER LEVEL (2/19/1928) | –1.7' |

REFERENCE:
NOAA/NOS STATION #8724580 KEY WEST, FLORIDA (1983–2001 TIDAL EPOCH)

CONCRETE:

1. ALL CONCRETE CONSTRUCTION AND DETAILING SHALL CONFORM TO SECTION 03 31 29 MARINE CONCRETE.

2. MATERIALS SHALL CONFORM TO THE FOLLOWING:
28 DAY COMPRESSION STRENGTH OF 5,000 PSI
MAXIMUM WATER TO CEMENT RATIO OF 0.40
28 DAY PERMEABILITY VALUE OF BELOW 2,000 COULOMBS

3. EXPOSED CONCRETE EDGES SHALL HAVE A 1" CHAMFER.

4. CONCRETE SHALL BE MOIST CURED FOR A PERIOD OF 7 DAYS. CURING SHALL BEGIN IMMEDIATELY AFTER FINISHING.

5. REINFORCING STEEL SHALL BE EPOXY COATED AND CONFORM TO ASTM A615, GRADE 60 IN ACCORDANCE WITH THE SPECIFICATIONS.

6. MAINTAIN 3" OF CLEAR COVER TO ALL REINFORCING STEEL, UNLESS OTHERWISE NOTED.

7. ALL REINFORCING SHALL BE FULLY SUPPORTED ON APPROVED PLASTIC CHAIRS AND BARS.

8. ALL HOOKS SHALL BE STANDARD 90 DEGREE HOOKS. LAPS AND SPLICES SHALL BE CLASS A IN ACCORDANCE WITH ACI 318–08.

9. CONTRACTOR SHALL SUBMIT DETAILED REINFORCING DRAWINGS INCLUDING BAR AND BENDING SCHEDULES TO THE CONTRACTING OFFICER FOR REVIEW AND APPROVAL PRIOR TO DELIVERY OF ANY REINFORCING STEEL.

10. WHERE "DRILL AND GROUT" IS CALLED FOR IN THE DRAWING SET, GROUT SHALL CONFORM TO THOSE LISTED ON THE FLORIDA DEPARTMENT OF TRANSPORTATION QUALIFIED PRODUCTS LIST FOR FAST SETTING GROUT FOR ANCHOR BOLTS OR APPROVED EQUIVALENT.

11. CONSTRUCTION JOINTS OTHER THAN THOSE SHOWN ON THE DRAWINGS MAY BE PROVIDED WITH WRITTEN APPROVAL FROM THE CONTRACTING OFFICER.

12. DETAILS OF CONCRETE NOT SHOWN SHALL CONFORM TO ACI 318–08.

STEEL SHEET PILES

1. ALL STEEL SHEET PILING SHALL CONFORM TO ASTM A572,

2. UNLESS OTHERWISE NOTED, ANY SUBSTITUTION OF STRUCTURAL SHAPES SHALL BE SUBMITTED FOR REVIEW AND ACCEPTANCE BY THE CONTRACTING OFFICER IN WRITING PRIOR TO USE.

3. THE CONTRACTOR SHALL PROVIDE DETAILS OF PILE DRIVING EQUIPMENT. THE DRIVING EQUIPMENT AND METHOD SHALL BE APPROVED BY THE CONTRACTING OFFICER. NO JETTING WILL BE PERMITTED, EXCEPT AS MAY BE NEEDED TO REMOVE OBSTRUCTIONS. JETTING SHALL BE APPROVED BY THE CONTRACTING OFFICER.

4. ALL SHEET PILES SHALL BE MARKED AT A GIVEN DISTANCE FROM THE BOTTOM, WHICH WILL SHOW ABOVE THE WATERLINE AFTER DRIVING, SO THAT THE BOTTOM ELEVATION OF EACH SHEET AND ITS RELATION WITH ADJACENT SHEETS CAN BE RECORDED.

5. SHEET PILES SPLICES SHALL NOT BE PERMITTED WITHOUT SPECIAL AUTHORIZATION FROM THE CONTRACTING OFFICER.

6. DO NOT DRIVE SHEETING WITHIN 50 FEET OF CONCRETE LESS THAN 72 HOURS OLD.

7. CUT OFF PORTIONS OF SHEET PILES SHALL BE REMOVED AND DISPOSED OF OFF–SITE BY THE CONTRACTOR.

8. DRIVE SHEET PILES TO THE MINIMUM ELEVATIONS AS SHOWN ON THE DRAWINGS OR REFUSAL AT THE APPROVAL OF THE CONTRACTING OFFICER.

9. SHEET PILES SHALL BE DRIVEN PLUMB AND TRUE TO LINE. PILINGS SHALL BE PLACED PLUMB WITH OUT–OF–PLUMBNESS NOT EXCEEDING $\frac{1}{4}$" PER FOOT OF LENGTH AND TRUE TO LINE. TOP OF PILE AT ELEVATION OF CUT–OFF SHALL BE WITHIN $\frac{1}{2}$" HORIZONTALLY AND 1" VERTICALLY OF THE LOCATION INDICATED.

10. SQUARE CUT THE TOPS OF SHEET PILES AT THE ELEVATION SHOWN ON THE DRAWING.

11. SHEET PILES WHICH ARE DAMAGED, MISLOCATED, OR DRIVEN OUT OF VERTICAL ALIGNMENT SHALL BE WITHDRAWN AND REPLACED BY NEW PILES AT NO ADDITIONAL COST TO THE GOVERNMENT.

12. SHEET PILES SHALL BE DRIVEN WITHIN APPROVED FALSE WORK OR APPROVED TEMPLATES.

13. STEEL SHEET PILES SHALL BE COATED ON BOTH SIDES WITH A COAL TAR EPOXY POLYAMIDE WITH A MINIMUM DRY FILM THICKNESS OF 16 MILS IN ACCORDANCE WITH SPECIFICATION SECTION 09 97 13.26.

Appledore Marine Engineering Inc.
600 STATE STREET, SUITE E
PORTSMOUTH, NEW HAMPSHIRE 03801
(603) 766–1870 amel@appledoremarine.com

| APPR | DATE | DESCRIPTION | SYM |
|---|---|---|---|

NAVFAC

ROBERT M. SNOVER LICENSE No. 72734 STATE OF FLORIDA PROFESSIONAL ENGINEER

SEAL

A/E FIRM NAME AND ADDRESS: Appledore Marine Engineering Inc. 600 State Street, Suite E Portsmouth, New Hampshire 03801

DSGN: JG/DG DRWN: SNB CHK: RMS

SUPV:

PRJMGR. CIV. STR.

MECH. ARCH.

ELEC.

SUBMITTED BY:

PRES. 12/23/2011
(SIGNED) (TITLE) (DATE)

A/E INFO

APPROVED

FOR COMMANDER NAVFAC / B.L.T.L

ACTIVITY

SATISFACTORY TO DATE

DES · DRW · CHK ·

PROJECT MANAGER ·

IPT TECH. BRANCH HEAD ·

CHIEF ENG/ARCH (CORE) ·

DEPARTMENT OF THE NAVY
OCEAN CONSTRUCTION DIVISION
NAVAL FACILITIES ENGINEERING COMMAND
NAVAL FACILITIES ENGINEERING COMMAND SOUTHEAST
EAST COAST DET.
NAVAL AIR STATION KEY WEST, FLORIDA

# BULKHEAD 497 REPAIRS

GENERAL NOTES

SCALE: SCALE
EPROJECT NO.: ·
CONSTR. CONTR. NO. N62473–06–D–3004
NAVFAC DRAWING NO. 10005479
SHEET 2 OF 18

G-002

DRAWFORM REVISION: 7 AUGUST 2009

FILE NAME: O:\602422 – USN Key West Central Mole Pier Corr\05 Supporting Documents\Drawings\G–002.dwg LAYOUT NAME: G–002 PLOTTED: Thursday, December 22, 2011 – 11:37am USER: bsullivan

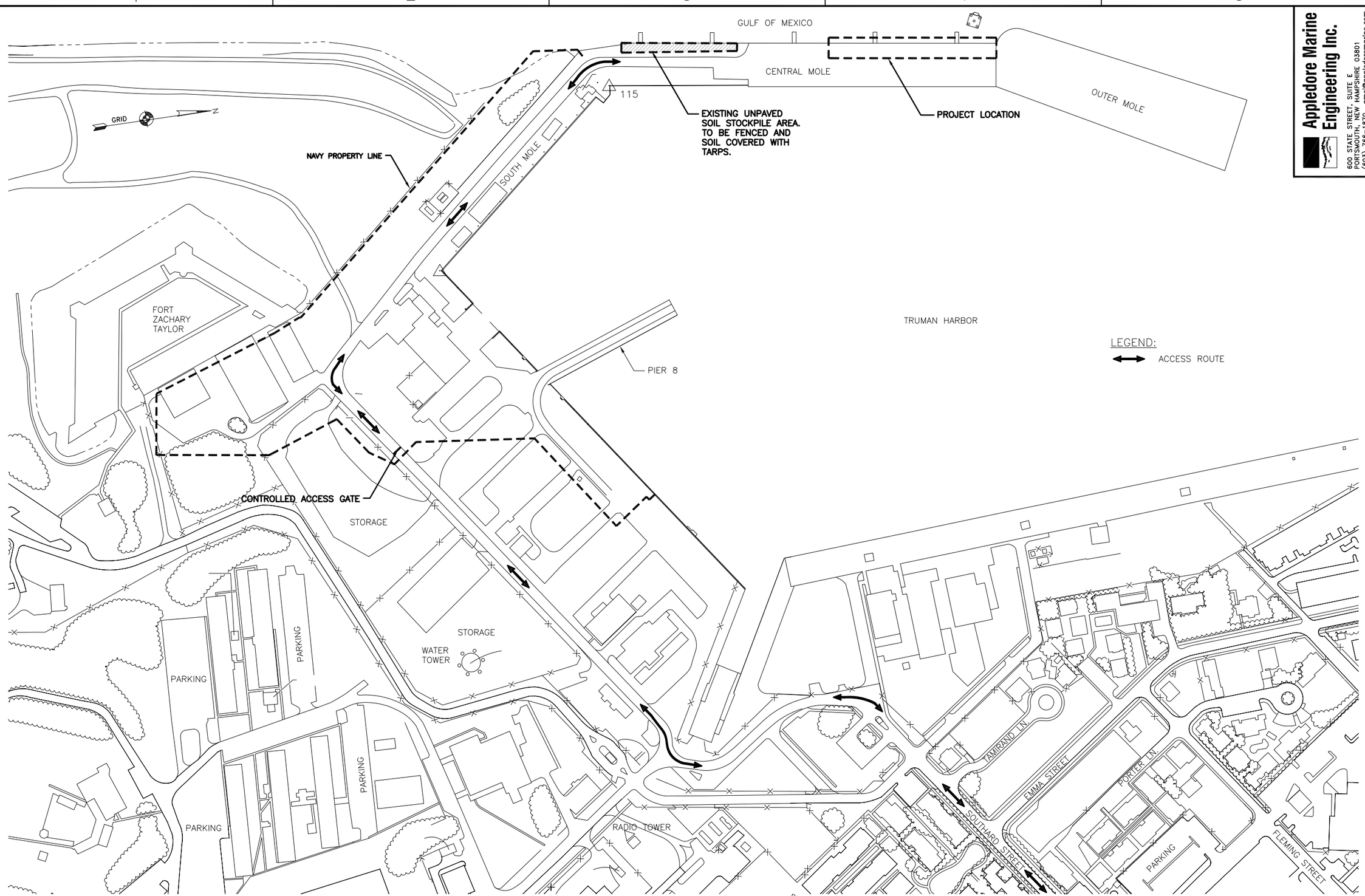


REFERENCE:

1. BERTHING IMPROVEMENTS, NAVAL AIR STATION KEY WEST, FL, TRUMAN ANNEX, NAVFAC No. 5429427.

PLAN NORTH

## STAGING PLAN

SCALE: NOT TO SCALE


Appledore Marine Engineering Inc.
600 STATE STREET, SUITE E
PORTSMOUTH, NEW HAMPSHIRE 03801
(603) 766-1870 amel@appledoremarine.com


| APPR | DATE | DESCRIPTION | SYM |
|---|---|---|---|
| | | | |

NAVFAC

ROBERT M. SNOVER LICENSE No. 72734 STATE OF FLORIDA PROFESSIONAL ENGINEER

SEAL

A/E FIRM NAME AND ADDRESS: Appledore Marine Engineering Inc. 600 State Street, Suite E Portsmouth, New Hampshire 03801

DSGN: JG/DG DRWN: SNB CHK: RMS

SUPV:

PRJMGR. CIV. STR.

MECH. ARCH.

ELEC.

SUBMITTED BY:

PRES. 12/23/2011

(SIGNED) (TITLE) (DATE)

A/E INFO

APPROVED

FOR COMMANDER NAVFAC / B.L.T.L

ACTIVITY

SATISFACTORY TO DATE

DES: DRW: CHK:

PROJECT MANAGER

IPT TECH. BRANCH HEAD

CHIEF ENG/ARCH (CORE)

DEPARTMENT OF THE NAVY
NAVAL FACILITIES ENGINEERING COMMAND
OCEAN CONSTRUCTION DIVISION
NAVAL FACILITIES ENGINEERING COMMAND SOUTHEAST
EAST COAST DET.
NAVAL AIR STATION KEY WEST, FLORIDA

# BULKHEAD 497 REPAIRS

STAGING PLAN

SCALE: SCALE

EPROJECT NO.:

CONSTR. CONTR. NO. N62473-06-D-3004

NAVFAC DRAWING NO. 10005480

SHEET 3 OF 18

G-101

DRAWFORM REVISION: 7 AUGUST 2009


FILE NAME: O:\502422 - USN Key West Central Mole Pier Coral\05 Supporting Documents\Drawings\G-101.dwg LAYOUT NAME: G-101 PLOTTED: Thursday, December 22, 2011 - 11:22am USER: bsullivan

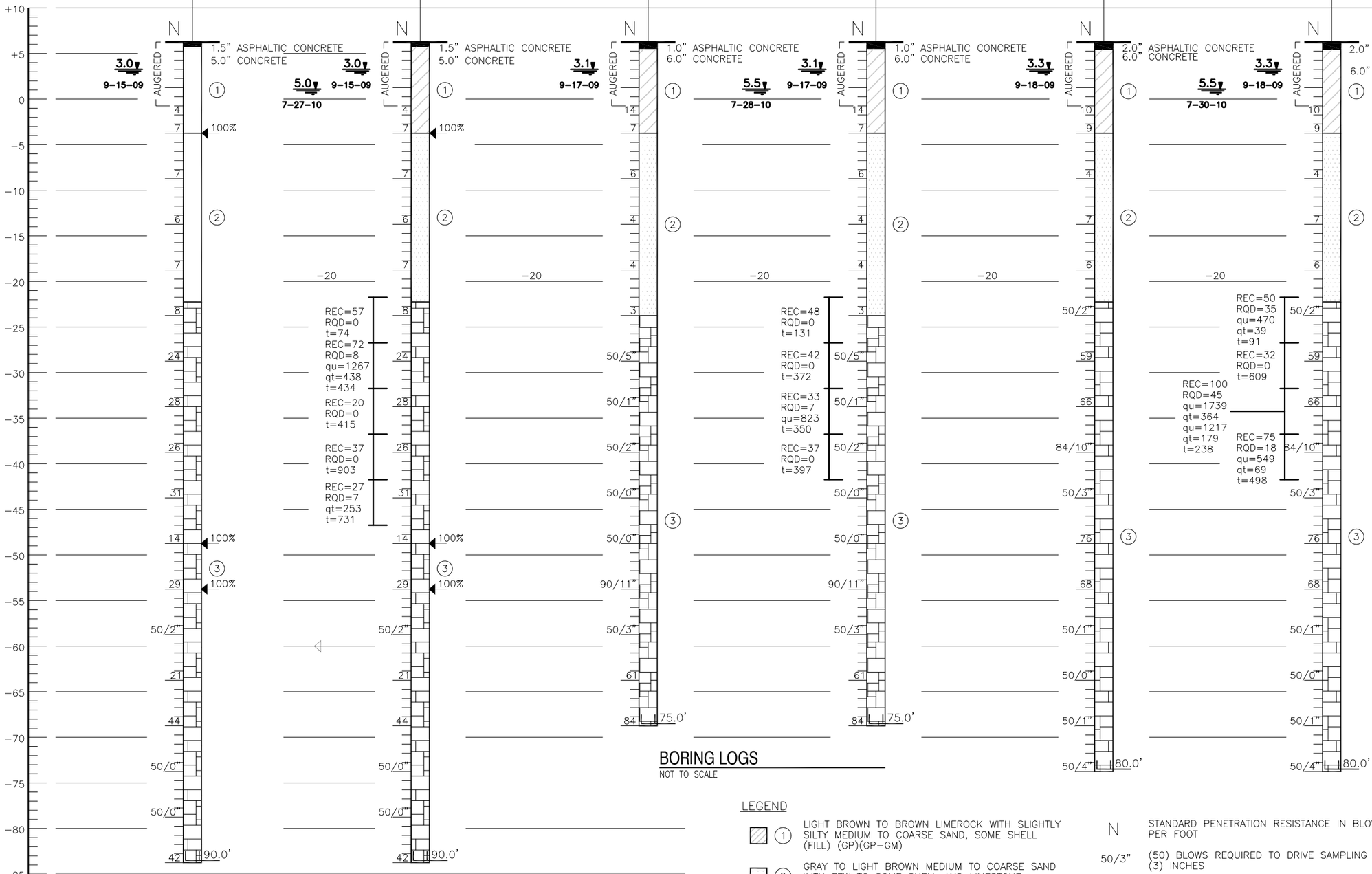


## BORING LOGS
NOT TO SCALE

NOTES:

1. BORING ELEVATIONS WERE SCALED FROM DRAWINGS PROVIDED TO NODARSE AND ASSOCIATES, INC AND SHOULD BE CONSIDERED APPROXIMATE. ELEVATIONS ARE REFERENCED TO NORTH AMERICAN VERTICAL DATUM 1988. (NAVD).
2. SEE SHEET C-101 FOR BORING LOCATIONS.
3. FINAL REPORT OF GEOTECHNICAL ENGINEERING SERVICS BY NODARSE & ASSOCIATES, INC. DATED OCTOBER 6, 2010.

ROCK CORE INFORMATION:

| | |
|---|---|
| REC | RECOVERY (%) |
| RQD | ROCK QUALITY DESIGNATION (%) |
| qu | UNCONFINED COMPRESSIVE STRENGTH (PSI) |
| qt | SPLIT TENSILE STRENGTH (PSI) |
| t | CORING TIME (SECONDS) |

LEGEND

| | |
|---|---|
| (1) | LIGHT BROWN TO BROWN LIMEROCK WITH SLIGHTLY SILTY MEDIUM TO COARSE SAND, SOME SHELL (FILL) (GP)(GP-GM) |
| (2) | GRAY TO LIGHT BROWN MEDIUM TO COARSE SAND WITH FEW TO SOME SHELL AND LIMESTONE FRAGMENTS (SP) |
| (3) | LIGHT BROWN LIMESTONE WITH SLIGHTLY SILTY FINE SAND |
| (SP) | UNIFIED SOIL CLASSIFICATION GROUP SYMBOL AS DETERMINED BY VISUAL EXAMINATION |
| 3.3 / 9-18-09 | DEPTH TO GROUNDWATER LEVEL IN FEET WITH DATE OF READING |
| N | STANDARD PENETRATION RESISTANCE IN BLOWS PER FOOT |
| 50/3" | (50) BLOWS REQUIRED TO DRIVE SAMPLING SPOON (3) INCHES |
| ⌊ 80.0' | DEPTH TO WHICH NW CASING WAS DRIVEN IN FEET (NOTE: 3-INCH CASING) |
| ◀ 100% | CIRCULATION LOSS (%) |


Appledore Marine Engineering Inc.
600 STATE STREET, SUITE E.
PORTSMOUTH, NEW HAMPSHIRE 03801
(603) 766-1870 ame@appledoremarine.com


NAVFAC

ROBERT M. SNOVER
LICENSE
No. 12734
STATE OF
FLORIDA
PROFESSIONAL ENGINEER

SEAL

A/E FIRM NAME AND ADDRESS: Appledore Marine Engineering Inc., 600 State Street, Suite E, Portsmouth, New Hampshire 03801
DSGN: JG/GG DRWN: SNB CHK: RWS
SUPV:
PRJMGR. CIV. STR.
MECH. ARCH.
ELEC.
SUBMITTED BY:
PRES. 12/23/2011
(SIGNED) (TITLE) (DATE)
A/E INFO

APPROVED
FOR COMMANDER NAVFAC / B.L.T.L
ACTIVITY
SATISFACTORY TO DATE
DES · DRW · CHK ·
PROJECT MANAGER ·
IPT TECH. BRANCH HEAD ·
CHIEF ENG/ARCH (CORE) ·

DEPARTMENT OF THE NAVY
NAVAL FACILITIES ENGINEERING COMMAND SOUTHEAST
OCEAN CONSTRUCTION DIVISION
NAVAL FACILITIES ENGINEERING COMMAND
EAST COAST DET.
NAVAL AIR STATION KEY WEST, FLORIDA

# BULKHEAD 497 REPAIRS
BORING LOGS

SCALE: SCALE
EPROJECT NO.: ·
CONSTR. CONTR. NO. N62473-06-D-3004
NAVFAC DRAWING NO. 10005481
SHEET 4 OF 18

B-001

DRAWFORM REVISION: 7 AUGUST 2009

APPR | DATE | DESCRIPTION | SYM


FILE NAME: O:\502422 - USN Key West Central Mole Pier Coral\05 Supporting Documents\Drawings\B-001.dwg LAYOUT NAME: B-001 PLOTTED: Thursday, December 22, 2011 - 11:22am USER: bsullivan

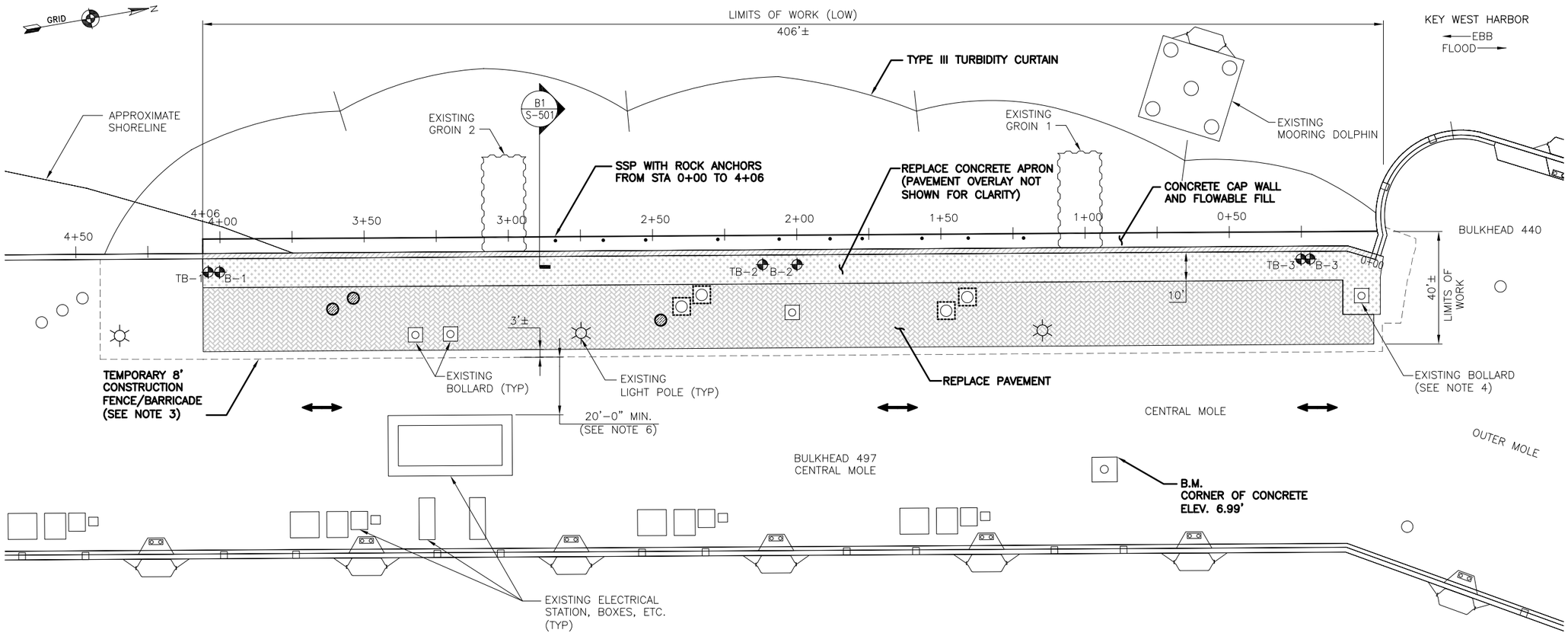


## WORK PLAN

SCALE: 1" = 20'-0"

PLAN NORTH

| TABLE OF MATERIALS | | |
|---|---|---|
| MATERIAL | *AMOUNT | UNIT |
| SSP | 410 | LF |
| SLAB CONCRETE | 80 | CY |
| BITUMINOUS PAVEMENT | 285 | TN |
| CAP WALL CONCRETE | 550 | CY |
| ROCK ANCHORS | 31 | EA |
| FLOWABLE FILL | 750 | CY |

*NOTE: AMOUNTS INDICATED IN THE TABLE OF MATERIALS ABOVE IS INTENDED TO SHOW APPROXIMATE QUANTITIES AND SHOULD NOT BE USED BY THE CONTRACTOR FOR ESTIMATING PURPOSES.

LEGEND:

- B-1 — BORING LOCATIONS
- PUBLIC ACCESS ROADWAY VEHICLE TRAVEL LANE
- 6" CONC. SLAB WITH 2" BIT PAVEMENT OVERLAY
- 4" BIT. PAVEMENT
- EXISTING MANHOLE **TO BE REPLACED**
- EXISTING 8" REMNANT FENDER PILE **TO BE REMOVED, SEE NOTE 9**
- EXISTING UTILITY COVER **TO BE CLEANED AND RECOATED (BITUMINOUS PAINT), SEE NOTE 8**

REFERENCE:

1. BERTHING IMPROVEMENTS, NAVAL AIR STATION KEY WEST, FL, TRUMAN ANNEX, NAVFAC No. 5115534.

NOTES:

1. SEE SHEET B-001 FOR BORING LOGS.
2. CONTRACTOR SHALL ASSESS SUITABILITY OF WALL TO SUPPORT INTENDED CONSTRUCTION LOADS PRIOR TO CONSTRUCTION AND SAFEGUARD CONSTRUCTION OPERATIONS ACCORDINGLY.
3. THE CONTRACTOR SHALL ERECT AND MAINTAIN TEMPORARY CONSTRUCTION FENCING/BARRICADES ALONG THE WORK SITE TO CONTROL ACCESS BY UNAUTHORIZED PEOPLE AND TO SEPARATE WORK OPERATIONS FROM THE PUBLIC.
4. NAVY AND CRUISE SHIPS DOCK FREQUENTLY AT THE OUTER MOLE, WHICH REQUIRES THE USE OF THE NORTHERN MOST BOLLARD WITHIN THE LIMITS OF WORK. THE CONTRACTOR SHALL COORDINATE CONSTRUCTION OPERATIONS WITH THE CONTRACTING OFFICER AND LOCAL PORT OPERATIONS AND SCHEDULE CONSTRUCTION OPERATIONS SUCH THAT THIS BOLLARD IS AVAILABLE FOR USE AT ANY TIME BY AUTHORIZED PERSONNEL. THE DOCKING SCHEDULE WILL BE MADE AVAILABLE TO THE CONTRACTOR, BUT IS SUBJECT TO CHANGE.
5. CONTRACTOR SHALL COORDINATE CONSTRUCTION WITH LOCAL PWD AND PORT OPERATIONS.
6. GOVERNMENT, CRUISE SHIPS, VENDORS, EMERGENCY AND SECURITY VEHICLES REQUIRE 24 HOUR ACCESS TO THE OUTER MOLE. THE CONTRACTOR SHALL ENSURE THAT AT ALL TIMES A MINIMUM OF 20' TRAVEL LANE EXISTS BETWEEN THE WORK SITE AND ANY OBSTRUCTIONS ON THE CENTRAL MOLE TO ALLOW SAFE PASSAGE OF VEHICLES.
7. CONTRACTOR TO MINIMIZE POWER AND COMMUNICATION OUTAGES TO THE OUTER MOLE. COORDINATE WITH LOCAL PWD AND PORT OPERATIONS PRIOR TO OUTAGES.
8. SEE SHEETS C-102 AND C-301 FOR MAPPING OF ASSUMED UNDERGROUND UTILITIES BASED ON ARCHIVE DRAWINGS AND UNDERGROUND UTILITY LOCATION SERVICES PROVIDED BY CRAIG A. SMITH ASSOCIATES. CONTRACTOR SHALL BE RESPONSIBLE FOR SUPPORTING AND MAINTAINING ALL ACTIVE UTILITIES, INCLUDING, BUT NOT LIMITED TO: ELECTRICAL, TELECOMMUNICATIONS, SANITARY SEWER, AND POTABLE WATER LINES THROUGHOUT THE DURATION OF CONSTRUCTION. CONTRACTOR SHALL ASSUME THAT ADDITIONAL ABANDONED AND ACTIVE UTILITIES EXIST IN THE WORK AREA THAT ARE NOT SHOWN. ABANDONED UTILITIES SHALL BE CUT AND CAPPED AS REQUIRED.
9. REMNANT TIMBER FENDER PILES ARE LOCATED AT THE MUDLINE AND EXTEND UP APPROXIMATELY 4 FEET. FENDER PILES SHALL BE REMOVED IN THEIR ENTIRETY.
10. SEE SHEET E-101 FOR ADDITIONAL ELECTRICAL AND TELECOMMUNICATION WORK PLAN.

Appledore Marine Engineering Inc.
600 STATE STREET, SUITE E
PORTSMOUTH, NEW HAMPSHIRE 03801
(603) 766-1870 amel@appledoremarine.com

NAVFAC

ROBERT M. SNOVER LICENSED No. 72734 STATE OF FLORIDA PROFESSIONAL ENGINEER

SEAL

A/E FIRM NAME AND ADDRESS: Appledore Marine Engineering Inc., 600 State Street, Suite E, Portsmouth, New Hampshire 03801

DSGN: JG/DG DRWN: SNB CHK: RMS

SUPV:

PRJMGR. CIV. STR.

MECH. ARCH.

ELEC.

SUBMITTED BY: PRES. 12/23/2011 (SIGNED) (TITLE) (DATE)

A/E INFO

APPROVED

FOR COMMANDER NAVFAC / B.L.T.L

ACTIVITY

SATISFACTORY TO DATE

DES · DRW · CHK ·

PROJECT MANAGER

IPT TECH. BRANCH HEAD

CHIEF ENG/ARCH (CORE)

DEPARTMENT OF THE NAVY
NAVAL FACILITIES ENGINEERING COMMAND
OCEAN CONSTRUCTION DIVISION
NAVAL AIR STATION KEY WEST, FLORIDA
NAVAL FACILITIES ENGINEERING COMMAND SOUTHEAST
EAST COAST DET.

# BULKHEAD 497 REPAIRS

WORK PLAN

SCALE: SCALE

EPROJECT NO.: ·

CONSTR. CONTR. NO. N62473-06-D-3004

NAVFAC DRAWING NO. 10005482

SHEET 5 OF 18

C-101

DRAWFORM REVISION: 7 AUGUST 2009

| APPR | DATE | DESCRIPTION | SYM |
|---|---|---|---|
| | | | |

FILE NAME: O:\502422 - USN Key West Control Mole Pier Corp\05 Supporting Documents\Drawings\C-101.dwg LAYOUT NAME: C-101 PLOTTED: Thursday, December 22, 2011 - 11:23am USER: bsullivan

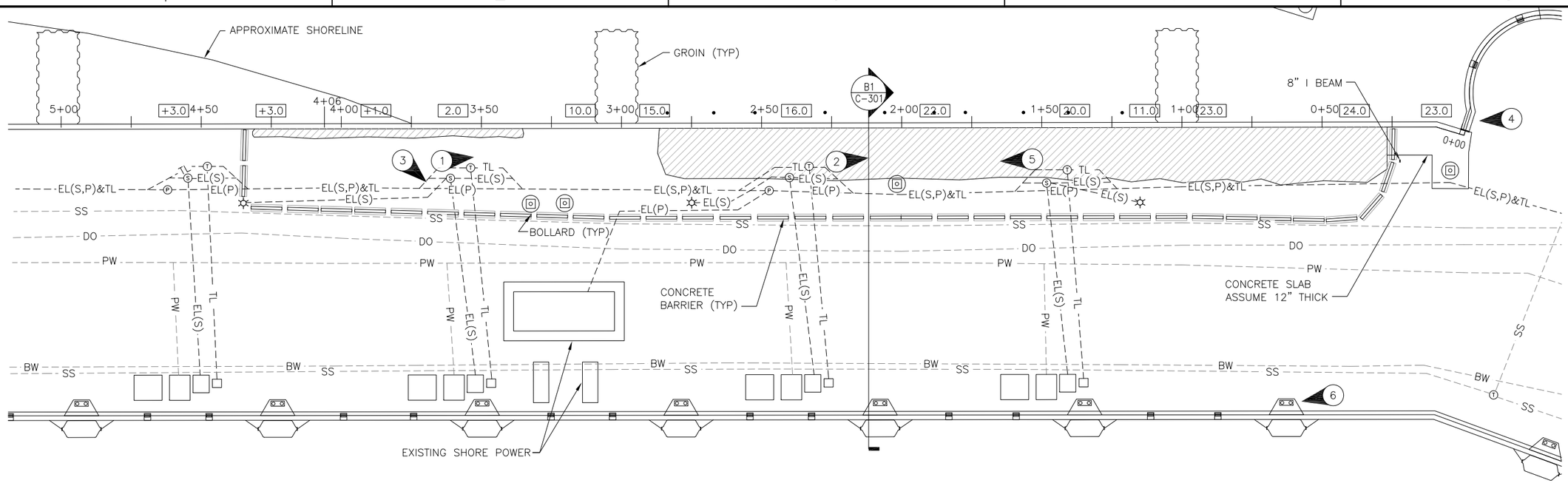


## BULKHEAD 497 PARTIAL PLAN

SCALE: 1" = 20'-0"

20' 10' 0 20'

PLAN NORTH

LEGEND:

| | |
|---|---|
| 0+00 | STATION DESIGNATION |
| ☼ | EXISTING LIGHT POLE |
| ○ | EXISTING MANHOLE COVER |
| ▨ | APPROXIMATE EXTENT OF SINKHOLE |
| ▣ | BOLLARD |
| 0.00 | SOUNDINGS IN FEET BELOW MLLW |
| (1) | PHOTOGRAPH NUMBER (ARROW INDICATES DIRECTION) (SEE SHEET C-901) |
| • | EXISTING 8" REMNANT FENDER PILE |
| ' | EXISTING 8" BEAM |
| -- PW -- | EXISTING POTABLE WATER |
| --EL(P)-- | EXISTING ELECTRICAL (PRIMARY) |
| --EL(S)-- | EXISTING ELECTRICAL (SECONDARY) |
| -- TL -- | EXISTING TELECOMMUNICATIONS |
| -- SS -- | EXISTING SANITARY SEWER |
| -- DO -- | EXISTING DIESEL OIL |
| -- BW -- | EXISTING BILGE OIL |
| Ⓣ | EXISTING TELECOMMUNICATIONS MANHOLE |
| Ⓢ | EXISTING ELECTRICAL MANHOLE (SENCONDARY) |
| Ⓟ | EXISTING ELECTRICAL MANHOLE (PRIMARY) |

| BULKHEAD WALL HORIZONTAL DISPLACEMENT | |
|---|---|
| STATION (FT) | HORIZONTAL DISPLACEMENT SEAWARD (IN) |
| 0+12 | 0 |
| 0+25 | 1.88 |
| 0+50 | 2.38 |
| 0+75 | 1.75 |
| 1+00 (GROIN) | 0 |
| 1+25 | 0.63 |
| 1+50 | 2.38 |
| 1+75 | 4.25 |
| 2+00 | 4.63 |
| 2+25 | 3.25 |
| 2+50 | 1.63 |
| 2+75 | 0.25 |
| 3+00 (GROIN) | 0 |
| 3+25 TO 4+06 | 0 |

| PAVEMENT SURFACE VERTICAL DISPLACEMENT | |
|---|---|
| STA (FT) | SUBSIDENCE BELOW SCUPPER (IN) |
| 0+00 | 0 |
| 0+25 | 0 |
| 0+32.5 | 2.25 |
| 0+52 | 5.5 |
| 0+71 | 6.75 |
| 0+89 | 5.00 |
| 1+08 | 2.5 |
| 1+28 | 2.5 |
| 1+47 | 4.00 |
| 1+66 | 4.25 |
| 1+85 | 7.75 |
| 2+05 | 7.75 |
| 2+24 | 5.00 |
| 2+43 | 3.00 |
| 2+62 | 2.00 |
| 2+81 | 0 |
| 3+00 | 0 |
| 3+19 | 0 |
| 3+30 | 0 |
| 3+57 | 2.00 |
| 3+77 | 0.50 |
| 3+95 | 0.75 |
| 4+15 | 1.50 |
| 4+34 | 1.50 |
| 4+53 | 0 |
| 4+72 | 1.50 |
| 4.91 | 1.25 |
| 5+10 | 0 |
| 5+30 | 0 |

NOTES:

1. EXISTING CONDITIONS BASED ON NAVFAC DWG NO. 5115585, 5115534, 5429451, 5429471, 5429488, 5429490, 5429506.
2. UTILITY LOCATIONS ARE APPROXIMATE.
3. DISPLACEMENTS WERE MEASURED IN OCTOBER 2011.

REFERENCES:

1. ISLAND SURVEYORS INC., TOPOGRAPHICAL SURVEY, 09/09.
2. CRAIG A. SMITH & ASSOCIATES, GROUND PENETRATION RADAR AND MAGNETOMETER SERVICES, 10/11.

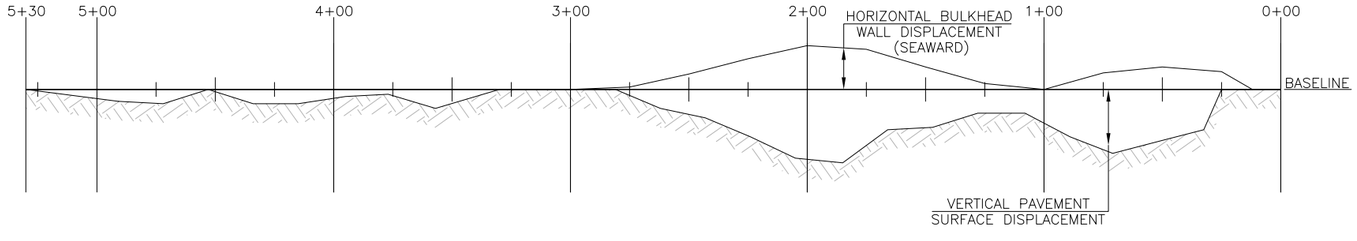


## BULKHEAD WALL AND PAVEMENT DISPLACEMENT

NO SCALE. SEE TABLES FOR BASELINE MEASUREMENTS


Appledore Marine Engineering Inc.
600 STATE STREET, SUITE E
PORTSMOUTH, NEW HAMPSHIRE 03801
(603) 766-1870 amel@appledoremarine.com


NAVFAC

ROBERT M. SNOVER LICENSE No. 12734 STATE OF FLORIDA PROFESSIONAL ENGINEER

SEAL

| | |
|---|---|
| A/E FIRM NAME AND ADDRESS | Appledore Marine Engineering Inc. 600 State Street, Suite E Portsmouth, New Hampshire 03801 |
| DSGN: JG/DG | DRWN: SNB CHK: RMS |
| SUPV: | |
| PRJMGR. | CIV. STR. |
| MECH. | ARCH. |
| ELEC. | |

SUBMITTED BY: PRES. 12/23/2011 (SIGNED) (TITLE) (DATE)

A/E INFO

APPROVED

FOR COMMANDER NAVFAC / B.L.T.L.

ACTIVITY

SATISFACTORY TO DATE

| DES | DRW | CHK |
|---|---|---|
| | | |

PROJECT MANAGER

IPT TECH. BRANCH HEAD

CHIEF ENG/ARCH (CORE)

NAVAL FACILITIES ENGINEERING COMMAND EAST COAST DET. OCEAN CONSTRUCTION DIVISION

DEPARTMENT OF THE NAVY NAVAL FACILITIES ENGINEERING COMMAND SOUTHEAST

NAVAL AIR STATION KEY WEST, FLORIDA

# BULKHEAD 497 REPAIRS

EXISTING CONDITIONS PLAN

SCALE: SCALE

EPROJECT NO.:

CONSTR. CONTR. NO. N62473-06-D-3004

NAVFAC DRAWING NO. 10005483

SHEET 6 OF 18

C-102

DRAWFORM REVISION: 7 AUGUST 2009

APPR | DATE | DESCRIPTION | SYM


FILE NAME: G:\502422 - USN Key West Control Mole Pier Coral\05 Supporting Documents\Drawings\C-102.dwg LAYOUT NAME: C-102 PLOTTED: Thursday, December 22, 2011 - 11:23am USER: bsullivan

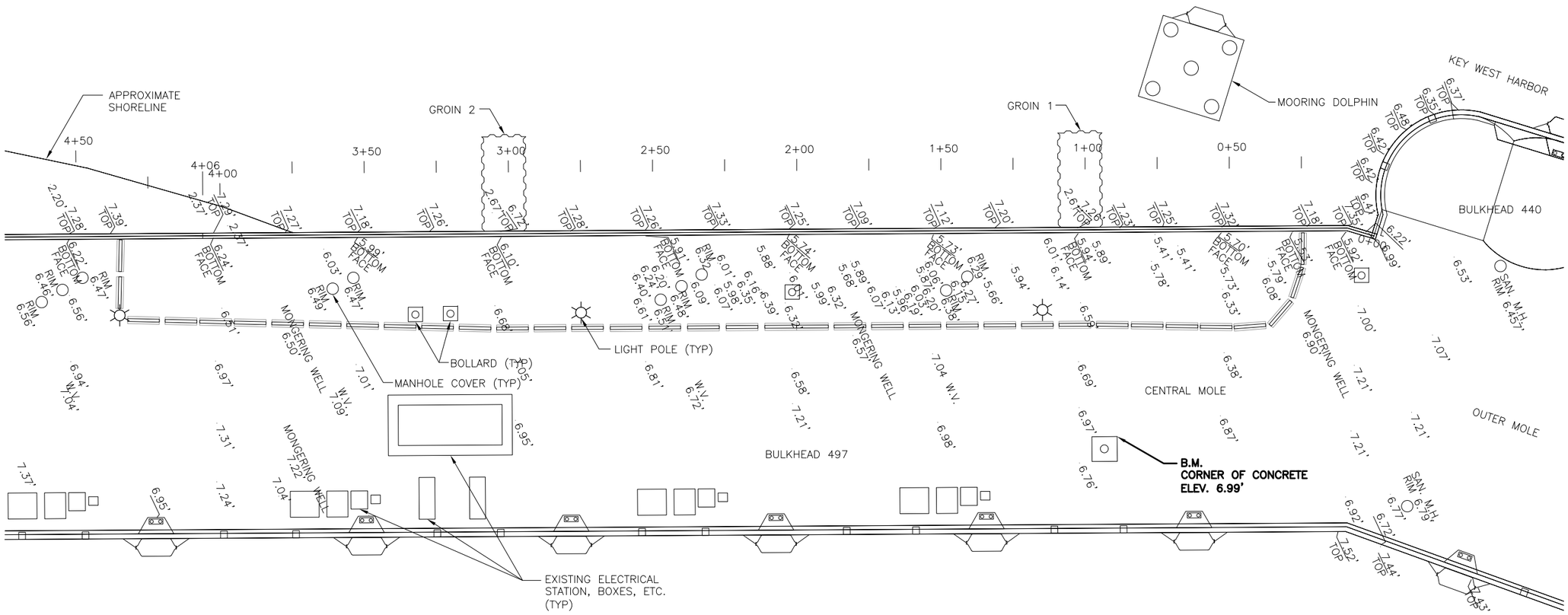


## SURVEY PLAN

SCALE: 1' = 20'-0"  0  10'  20'  40'

PLAN NORTH

REFERENCE:

1. SURVEY COMPLETED BY ISLAND SURVEYING INC. IN SEPTEMBER 2009.


Appledore Marine Engineering Inc.
600 STATE STREET, SUITE E
PORTSMOUTH, NEW HAMPSHIRE 03801
(603) 766-1870 amel@appledoremarine.com


NAVFAC

ROBERT M. SNOVER LICENSE No. 72734 STATE OF NEW HAMPSHIRE PROFESSIONAL ENGINEER

SEAL

A/E FIRM NAME AND ADDRESS: Appledore Marine Engineering Inc. 600 State Street, Suite E Portsmouth, New Hampshire 03801

DSGN: JG/DG DRWN: xxx CHK: RMS

SUPV:

PRJMGR. CIV. STR.

MECH. ARCH.

ELEC.

SUBMITTED BY:

PRES. 12/23/2011

(SIGNED) (TITLE) (DATE)

A/E INFO

APPROVED

FOR COMMANDER NAVFAC / B.L.T.L.

ACTIVITY

SATISFACTORY TO DATE

DES · DRW · CHK ·

PROJECT MANAGER ·

IPT TECH. BRANCH HEAD ·

CHIEF ENG/ARCH (CORE) ·

·

DEPARTMENT OF THE NAVY
NAVAL FACILITIES ENGINEERING COMMAND
OCEAN CONSTRUCTION DIVISION

NAVAL FACILITIES ENGINEERING COMMAND SOUTHEAST
EAST COAST DET.

NAVAL AIR STATION KEY WEST, FLORIDA

# BULKHEAD 497 REPAIRS

SURVEY PLAN

SCALE: SCALE

EPROJECT NO.: ·

CONSTR. CONTR. NO. N62473-06-D-3004

NAVFAC DRAWING NO. 10005484

SHEET 7 OF 18

C-103

DRAWFORM REVISION: 7 AUGUST 2009


FILE NAME: O:\502422 - USN Key West Central Mole Pier Coral\05 Supporting Documents\Drawings\C-103.dwg LAYOUT NAME: C-103 PLOTTED: Thursday, December 22, 2011 - 11:23am USER: bsullivan

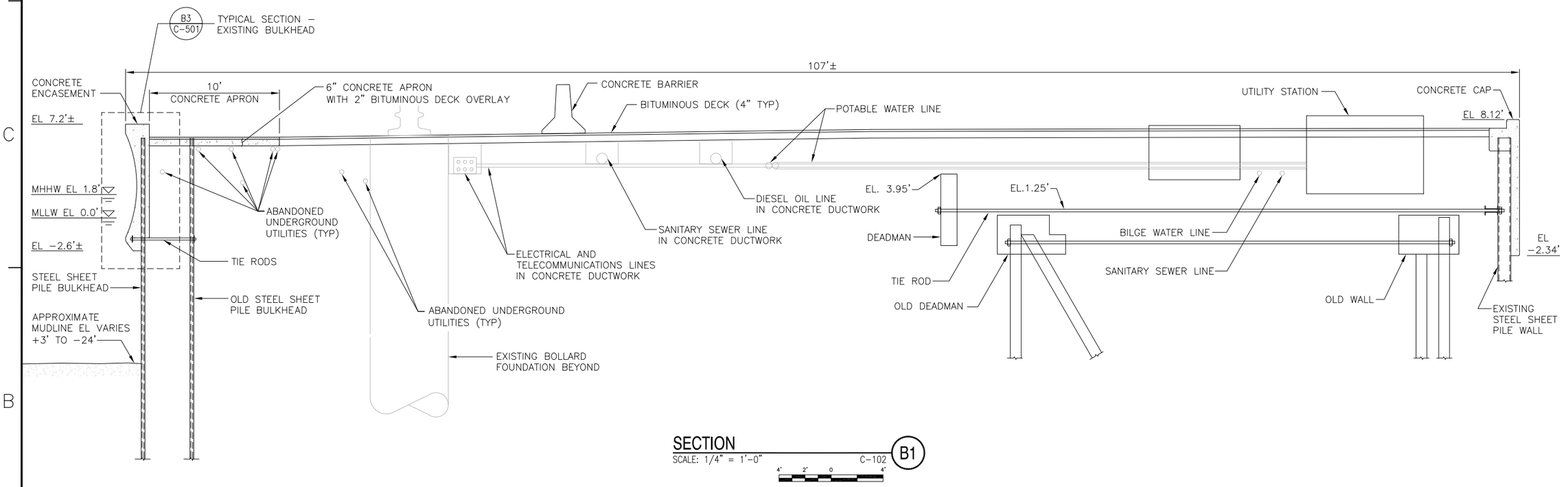


## SECTION

SCALE: 1/4" = 1'–0"

B1 C–102

4' 2' 0 4'

NOTES:

1. EXISTING CONDITIONS BASED ON NAVFAC DWG NO. 5115585, 5115534, 5429451, 5429471, 5429488, 5429490, 5429506.
2. UTILITY LOCATIONS ARE APPROXIMATE. CONTRACTOR SHALL ASSUME THAT ADDITIONAL ABANDONED UTILITIES EXIST IN THE WORK AREA THAT ARE NOT SHOWN.

REFERENCES:

1. ISLAND SURVEYORS INC., TOPOGRAPHICAL SURVEY, 09/09.
2. NODARSE & ASSOCIATES, INC., GROUND PENETRATION RADAR (GPR) SERVICES, 10/10.
3. CRAIG A. SMITH & ASSOCIATES, GROUND PENETRATION RADAR AND MAGNETOMETER SERVICES, 10/11.


Appledore Marine Engineering Inc.
600 STATE STREET, SUITE E
PORTSMOUTH, NEW HAMPSHIRE 03801
(603) 766–1870 amel@appledoremarine.com


APPR | DATE | DESCRIPTION | SYM

NAVFAC

ROBERT M. SNOVER LICENSE No. 12734 STATE OF NEW HAMPSHIRE PROFESSIONAL ENGINEER

SEAL

A/E FIRM / NAME AND ADDRESS: Appledore Marine Engineering Inc., 600 State Street, Suite E, Portsmouth, New Hampshire 03801

DSGN: JG/DG DRWN: SNB CHK: RMS

SUPV:

PRJMGR. | CIV. STR.

MECH. | ARCH.

ELEC.

SUBMITTED BY: PRES. 12/23/2011 (SIGNED) (TITLE) (DATE)

A/E INFO

APPROVED

FOR COMMANDER NAVFAC / B.L.T.L.

ACTIVITY

SATISFACTORY TO DATE

DES · | DRW · | CHK ·

PROJECT MANAGER ·

IPT TECH. BRANCH HEAD ·

CHIEF ENG/ARCH (CORE) ·

DEPARTMENT OF THE NAVY
NAVAL FACILITIES ENGINEERING COMMAND
OCEAN CONSTRUCTION DIVISION
NAVAL FACILITIES ENGINEERING COMMAND SOUTHEAST
EAST COAST DET.
NAVAL AIR STATION KEY WEST, FLORIDA

# BULKHEAD 497 REPAIRS

EXISTING CONDITIONS SECTION

SCALE: SCALE

EPROJECT NO.: ·

CONSTR. CONTR. NO. N62473–06–D–3004

NAVFAC DRAWING NO. 10005485

SHEET 8 OF 18

C-301

DRAWFORM REVISION: 7 AUGUST 2009


FILE NAME: O:\502422 – USN Key West Central Mole Pier Coral\05 Supporting Documents\Drawings\C–301.dwg LAYOUT NAME: C–301 PLOTTED: Thursday, December 22, 2011 – 11:23am USER: bsullivan

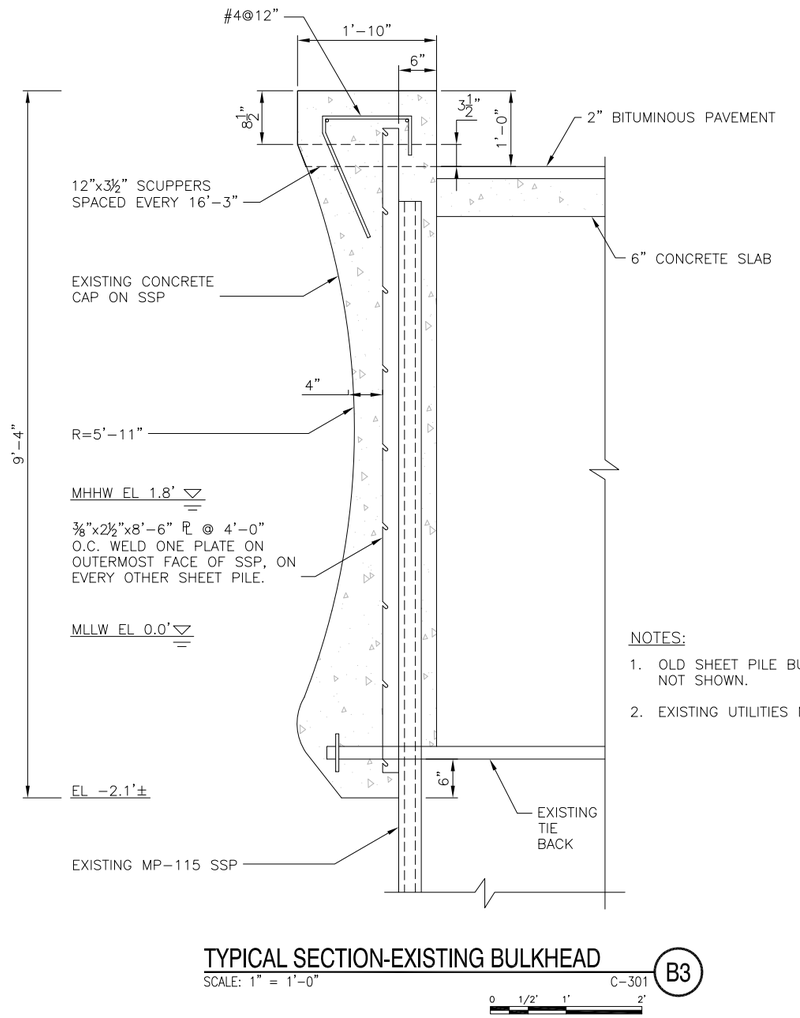


## TYPICAL SECTION-EXISTING BULKHEAD

SCALE: 1" = 1'-0"

B3

C-301

0 1/2' 1' 2'

NOTES:

1. OLD SHEET PILE BULKHEAD WALL NOT SHOWN.
2. EXISTING UTILITIES NOT SHOWN.


Appledore Marine Engineering Inc.
600 STATE STREET, SUITE E
PORTSMOUTH, NEW HAMPSHIRE 03801
(603) 766-1870 amel@appledoremarine.com


| MK | DESCRIPTION | DATE | APPR |
|---|---|---|---|
| | | | |

NAVFAC

ROBERT M. SNOVER LICENSE No. 72734 STATE OF FLORIDA PROFESSIONAL ENGINEER

SEAL

A/E FIRM NAME AND ADDRESS: Appledore Marine Engineering Inc. 600 State Street, Suite E Portsmouth, New Hampshire 03801

DSGN: JG/GG DRWN: SNB CHK: RMS

SUPV:

PRJMGR. CIV. STR.

MECH. ARCH.

ELEC.

SUBMITTED BY:

PRES. 12/23/2011

(SIGNED) (TITLE) (DATE)

A/E INFO

APPROVED

FOR COMMANDER NAVFAC / B.L.T.L.

ACTIVITY

SATISFACTORY TO DATE

DES · DRW · CHK ·

PROJECT MANAGER ·

IPT TECH. BRANCH HEAD ·

CHIEF ENG/ARCH (CORE) ·

·

DEPARTMENT OF THE NAVY
NAVAL FACILITIES ENGINEERING COMMAND
OCEAN CONSTRUCTION DIVISION

NAVAL FACILITIES ENGINEERING COMMAND SOUTHEAST
EAST CONST DET.

NAVAL AIR STATION KEY WEST, FLORIDA

# BULKHEAD 497 REPAIRS

EXISTING PILE CAP DETAILS

SCALE: SCALE

EPROJECT NO.: ·

CONSTR. CONTR. NO.
N62473-06-D-3004

NAVFAC DRAWING NO.
10005486

SHEET 9 OF 18

C-501

DRAWFORM REVISION: 7 AUGUST 2009


FILE NAME: O:\502422 - USN Key West Central Mole Pier Coral\05 Supporting Documents\Drawings\C-501.dwg LAYOUT NAME: C-501 PLOTTED: Thursday, December 22, 2011 - 11:23am USER: bsullivan

PHOTO 1

PHOTO 2

PHOTO 3

PHOTO 4

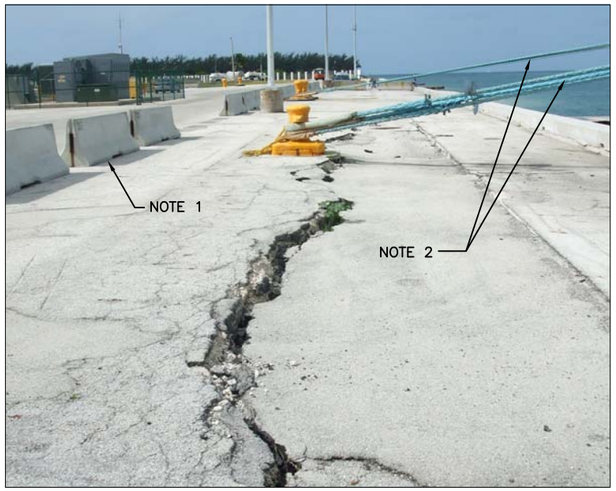


PHOTO 5

PHOTO 6

NOTES:

1. JERSEY BARRIERS WILL NOT BE AVAILABLE FOR CONTRACTOR USE (TYP). CONTRACTOR SHALL REMOVE AND STOCKPILE THE JERSEY BARRIERS AT THE LOCATION DETERMINED BY THE CONTRACTING OFFICER. STOCKPILE SITE WILL BE LOCATED WITHIN THE TRUMAN ANNEX.

2. CRUISE SHIPS DOCK FREQUENTLY AT THE OUTER MOLE, WHICH REQUIRES THE USE OF ALL BOLLARDS WITHIN THE LIMITS OF WORK. THE CONTRACTOR SHALL FACILITATE AND SCHEDULE CONSTRUCTION OPERATIONS SUCH THAT THE BOLLARDS ARE AVAILABLE FOR USE AT ANY TIME BY AUTHORIZED PERSONNEL. THE DOCKING SCHEDULE WILL BE MADE AVAILABLE TO THE CONTRACTOR, BUT IS SUBJECT TO CHANGE.

Appledore Marine Engineering Inc.
600 STATE STREET, SUITE E
PORTSMOUTH, NEW HAMPSHIRE 03801
(603) 766-1870 amel@appledoremarine.com

| SYM | DESCRIPTION | DATE | APPR |
|---|---|---|---|

NAVFAC

ROBERT M. SNOVER LICENSE No. 12734 STATE OF FLORIDA PROFESSIONAL ENGINEER

SEAL

A/E FIRM NAME AND ADDRESS: Appledore Marine Engineering Inc. 600 State Street, Suite E Portsmouth, New Hampshire 03801

DSGN: JG/GG DRWN: SNB CHK: RMS

SUPV:

PRJMGR. CIV. STR.

MECH. ARCH.

ELEC.

SUBMITTED BY:

PRES. 12/23/2011

(SIGNED) (TITLE) (DATE)

A/E INFO

APPROVED

FOR COMMANDER NAVFAC / B.L.T.L

ACTIVITY

SATISFACTORY TO DATE

DES · DRW · CHK ·

PROJECT MANAGER ·

IPT TECH. BRANCH HEAD ·

CHIEF ENG/ARCH (CORE) ·

·

DEPARTMENT OF THE NAVY
NAVAL FACILITIES ENGINEERING COMMAND
OCEAN CONSTRUCTION DIVISION
NAVAL FACILITIES ENGINEERING COMMAND SOUTHEAST
EAST COAST DET.
NAVAL AIR STATION KEY WEST, FLORIDA

# BULKHEAD 497 REPAIRS

PHOTOGRAPHS

SCALE: SCALE

EPROJECT NO.: ·

CONSTR. CONTR. NO. N62473-06-D-3004

NAVFAC DRAWING NO. 10005487

SHEET 10 OF 18

C-901

DRAWFORM REVISION: 7 AUGUST 2009

FILE NAME: O:\502422 - USN Key West Central Mole Pier Coral\06 Supporting Documents\Drawings\C-901.dwg LAYOUT NAME: C-901 PLOTTED: Thursday, December 22, 2011 - 11:23am USER: bsullivan

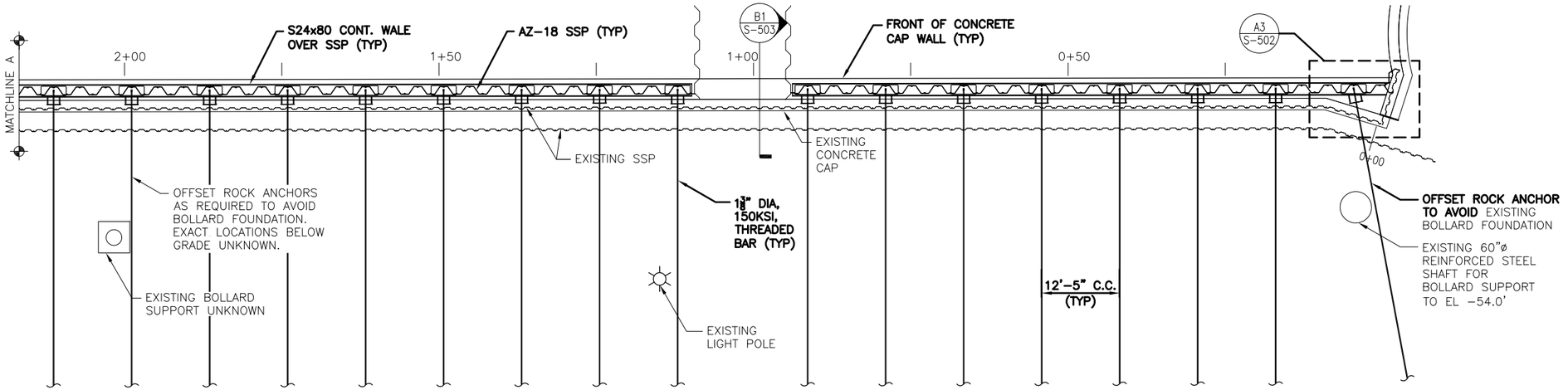


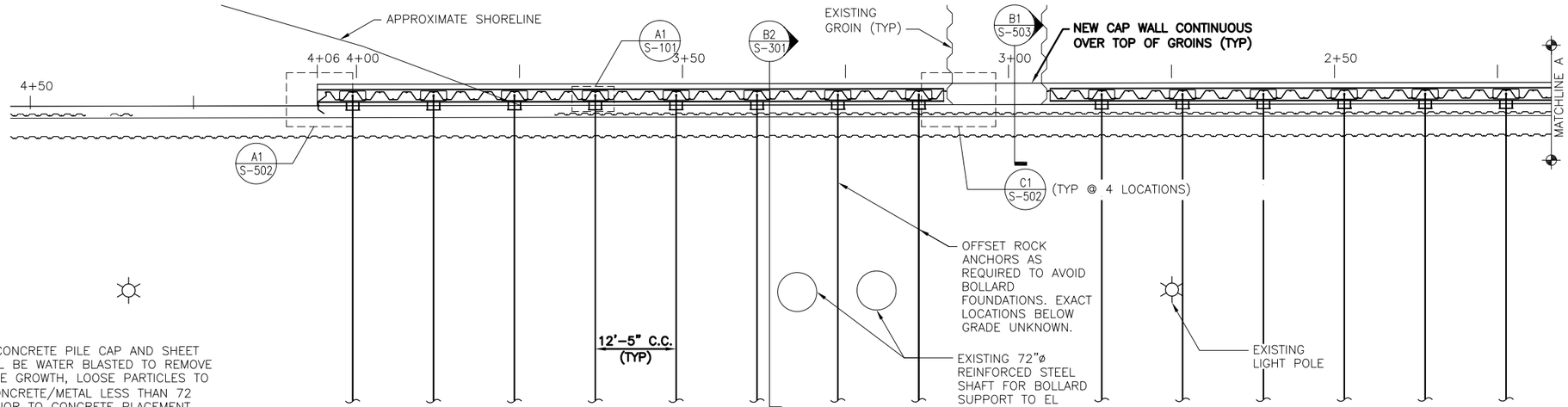


℄ ROCK ANCHOR COINCIDES WITH ℄ OF OUTBOARD AZ-18 INTERLOCK (TYP, ALL ANCHORS)

## ROCK ANCHOR PLAN @ EL +4.0'

SCALE: 1" = 10'-0"

PLAN NORTH

NOTES:

1. EXISTING CONCRETE PILE CAP AND SHEET PILE SHALL BE WATER BLASTED TO REMOVE ALL MARINE GROWTH, LOOSE PARTICLES TO SOUND CONCRETE/METAL LESS THAN 72 HOURS PRIOR TO CONCRETE PLACEMENT.

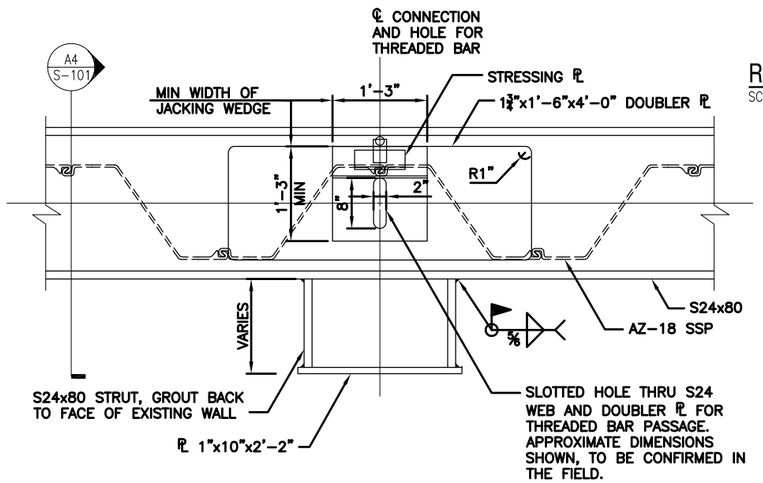


## ROCK ANCHOR TOP CONNECTION (A1)

SCALE: 1" = 1'-0" — S-101

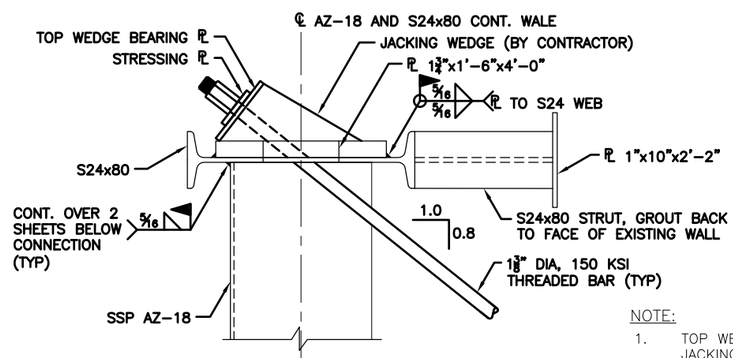


## ROCK ANCHOR TOP CONNECTION (A4)

SCALE: 1 1/2" = 1'-0" — S-101

NOTE:

1. TOP WEDGE BEARING PLATE AND JACKING WEDGE DESIGNED AND DETAILED BY CONTRACTOR. SEE S-301 FOR ROCK ANCHOR LOADS.


Appledore Marine Engineering Inc.
600 STATE STREET, SUITE E
PORTSMOUTH, NEW HAMPSHIRE 03801
(603) 766-1870 amel@appledoremarine.com


NAVFAC

ROBERT M. SNOVER LICENSE No. 12734 STATE OF NEW HAMPSHIRE PROFESSIONAL ENGINEER

SEAL

| | |
|---|---|
| A/E FIRM NAME AND ADDRESS | Appledore Marine Engineering Inc. 600 State Street, Suite E Portsmouth, New Hampshire, 03801 |
| DSGN: JG/GG | DRWN: SNB CHK: RMS |
| SUPV: | |
| PRJMGR. | CIV. STR. |
| MECH. | ARCH. |
| ELEC. | |
| SUBMITTED BY: | |
| (SIGNED) | PRES. (TITLE) 12/23/2011 (DATE) |

A/E INFO

APPROVED

FOR COMMANDER NAVFAC / B.L.T.L

ACTIVITY

| | | | |
|---|---|---|---|
| SATISFACTORY TO DATE | | | |
| DES | DRW | CHK | |
| PROJECT MANAGER | | | |
| IPT TECH. BRANCH HEAD | | | |
| CHIEF ENG/ARCH (CORE) | | | |

DEPARTMENT OF THE NAVY
NAVAL FACILITIES ENGINEERING COMMAND
OCEAN CONSTRUCTION DIVISION

NAVAL FACILITIES ENGINEERING COMMAND SOUTHEAST
EAST COAST DET.

NAVAL AIR STATION KEY WEST, FLORIDA

# BULKHEAD 497 REPAIRS

ROCK ANCHOR PLAN

| | |
|---|---|
| SCALE: | SCALE |
| EPROJECT NO.: | |
| CONSTR. CONTR. NO. | N62473-06-D-3004 |
| NAVFAC DRAWING NO. | 10005488 |
| SHEET | 11 OF 18 |

S-101

DRAWFORM REVISION: 7 AUGUST 2009

| APPR | DATE | DESCRIPTION | SYM |
|---|---|---|---|
| | | | |


FILE NAME: O:\502422 - USN Key West Central Mole Pier Coral\05 Supporting Documents\Drawings\S-101.dwg LAYOUT NAME: S-101 PLOTTED: Thursday, December 22, 2011 - 11:23am USER: bsullivan

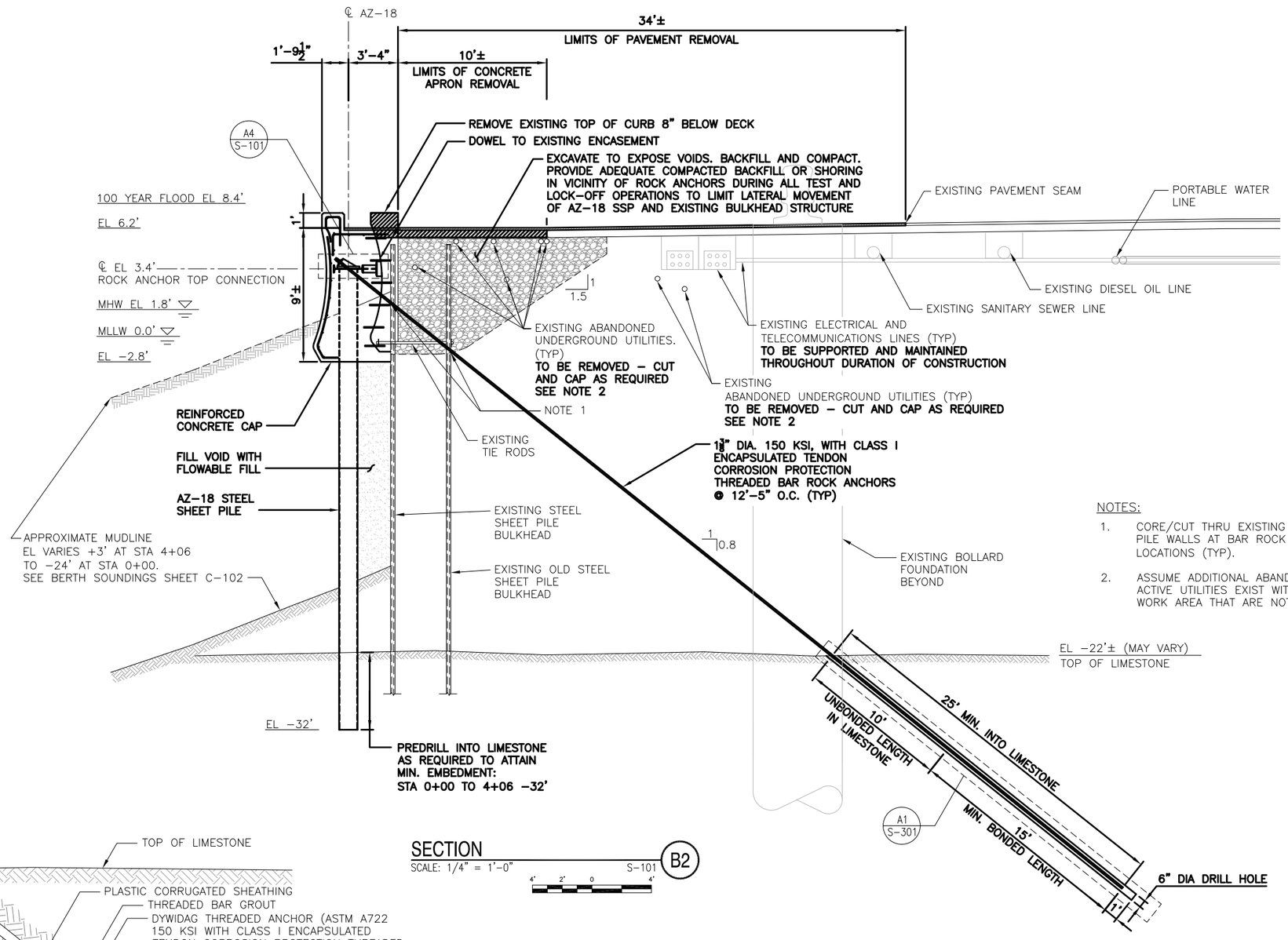


NOTES:

1. CORE/CUT THRU EXISTING SHEET PILE WALLS AT BAR ROCK ANCHOR LOCATIONS (TYP).
2. ASSUME ADDITIONAL ABANDONED AND ACTIVE UTILITIES EXIST WITHIN THE WORK AREA THAT ARE NOT SHOWN.

SECTION
SCALE: 1/4" = 1'–0" S–101 B2

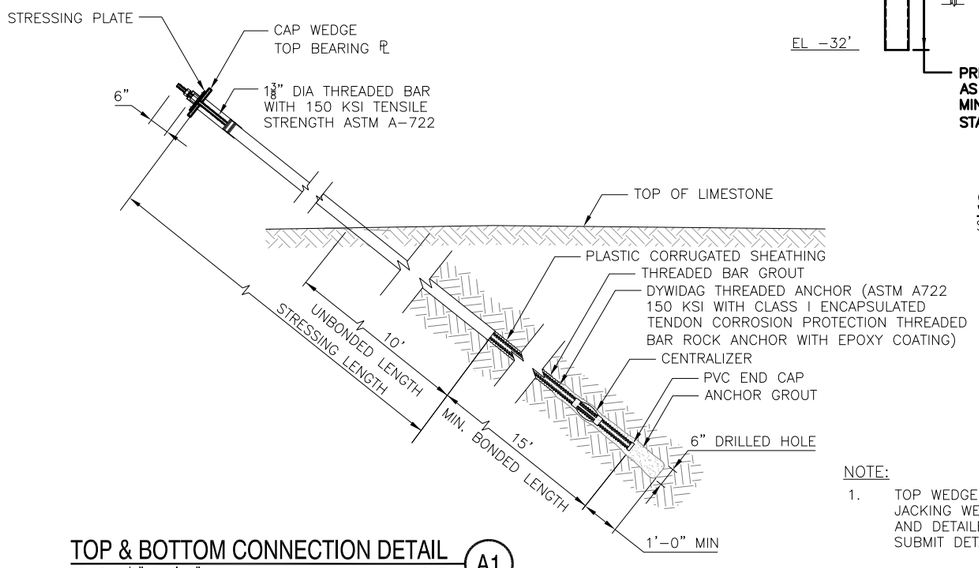


TOP & BOTTOM CONNECTION DETAIL
SCALE: 1/2" = 1'–0" S–301 A1

NOTE:

1. TOP WEDGE BEARING PLATE AND JACKING WEDGE TO BE DESIGNED AND DETAILED BY CONTRACTOR. SUBMIT DETAILS FOR APPROVAL.

| ROCK ANCHOR DETAILS AT BULKHEAD 497 STA 0+00 TO 4+06 | |
|---|---|
| ANCHOR SIZE | 1⅜" |
| DESIGN LOAD | 128 KIPS |
| LOCK–OFF LOAD | 64 KIPS |
| PROOF LOAD | 170 KIPS |
| ULTIMATE ANCHOR CAPACITY | 237 KIPS |
| MIN. EMBEDMENT LENGTH BELOW TOP OF ROCK | 25' |
| MIN. BONDED LENGTH | 15' (6" DIA. HOLE) |

LEGEND:

BACKFILL

REMOVAL

Appledore Marine Engineering Inc.
600 STATE STREET, SUITE E
PORTSMOUTH, NEW HAMPSHIRE 03801
(603) 766–1870 amel@appledoremarine.com

APPR | DATE | DESCRIPTION | STM

NAVFAC

ROBERT M. SNOWER LICENSE No. 72734 STATE OF FLORIDA PROFESSIONAL ENGINEER

SEAL

A/E FIRM NAME AND ADDRESS: Appledore Marine Engineering Inc. 600 State Street, Suite E Portsmouth, New Hampshire 03801

DSGN: JG/DG DRWN: SNB CHK: RMS

SUPV:

PRJMGR. | CIV. STR.

MECH. | ARCH.

ELEC.

SUBMITTED BY:

PRES. 12/23/2011

(SIGNED) (TITLE) (DATE)

A/E INFO

APPROVED

FOR COMMANDER NAVFAC / B.L.T.L.

ACTIVITY

SATISFACTORY TO DATE

DES · DRW · CHK ·

PROJECT MANAGER ·

IPT TECH. BRANCH HEAD ·

CHIEF ENG/ARCH (CORE) ·

·

DEPARTMENT OF THE NAVY
NAVAL FACILITIES ENGINEERING COMMAND
OCEAN CONSTRUCTION DIVISION

NAVAL FACILITIES ENGINEERING COMMAND SOUTHEAST
EAST COAST DET.

NAVAL AIR STATION KEY WEST, FLORIDA

BULKHEAD 497 REPAIRS

TYPICAL REPAIR SECTION

SCALE: SCALE

EPROJECT NO.: ·

CONSTR. CONTR. NO. N62473–06–D–3004

NAVFAC DRAWING NO. 10005489

SHEET 12 OF 18

S-301

DRAWFORM REVISION: 7 AUGUST 2009

FILE NAME: O:\502422 – USN Key West Central Mole Pier Const\05 Supporting Documents\Drawings\S–301.dwg LAYOUT NAME: S–301 PLOTTED: Thursday, December 22, 2011 – 11:23am USER: bsullivan

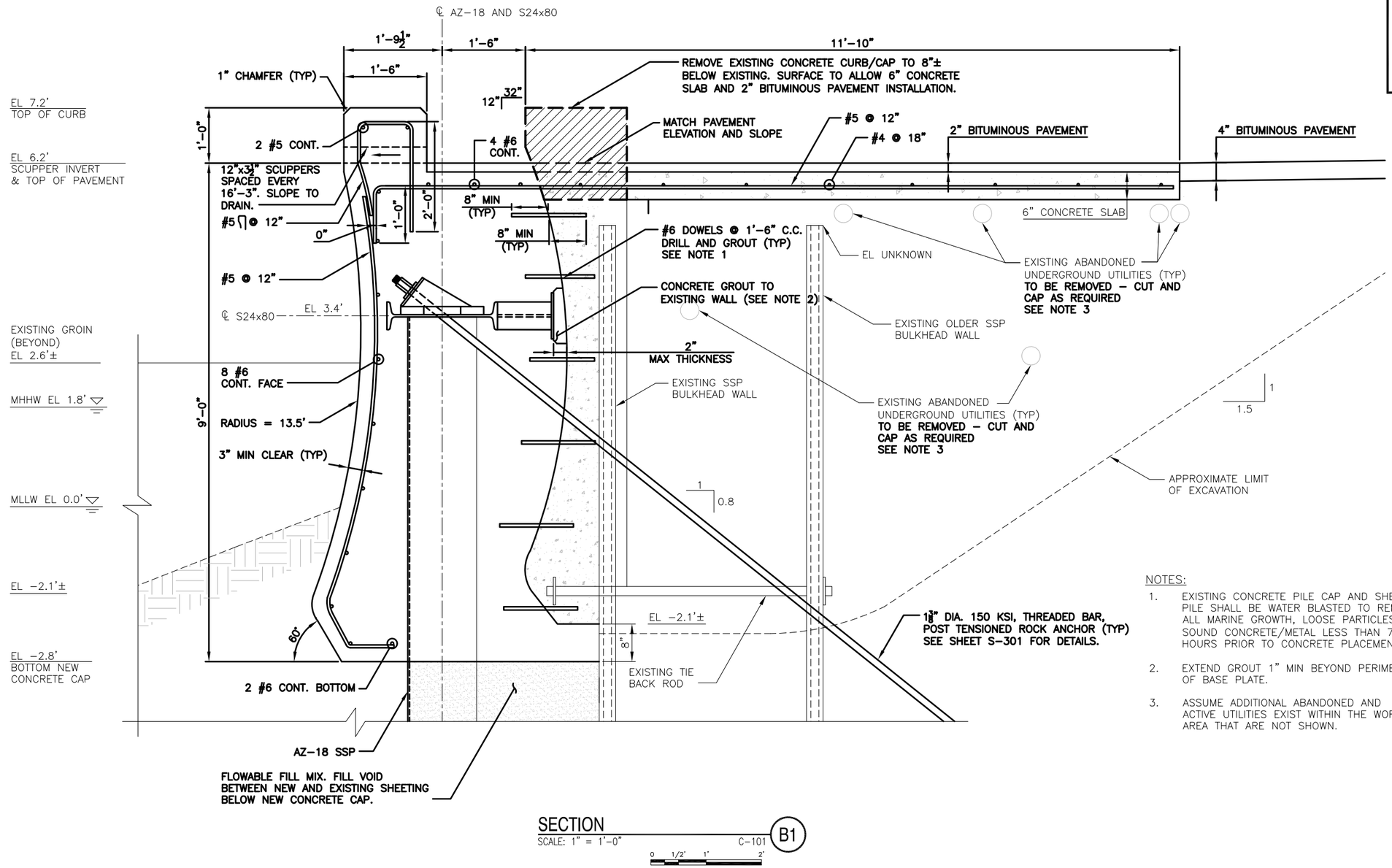


## SECTION

SCALE: 1" = 1'–0" C–101 B1

0 1/2' 1' 2'

NOTES:

1. EXISTING CONCRETE PILE CAP AND SHEET PILE SHALL BE WATER BLASTED TO REMOVE ALL MARINE GROWTH, LOOSE PARTICLES TO SOUND CONCRETE/METAL LESS THAN 72 HOURS PRIOR TO CONCRETE PLACEMENT.
2. EXTEND GROUT 1" MIN BEYOND PERIMETER OF BASE PLATE.
3. ASSUME ADDITIONAL ABANDONED AND ACTIVE UTILITIES EXIST WITHIN THE WORK AREA THAT ARE NOT SHOWN.


Appledore Marine Engineering Inc.
600 STATE STREET, SUITE E
PORTSMOUTH, NEW HAMPSHIRE 03801
(603) 766–1870 amel@appledoremarine.com


NAVFAC

ROBERT M. SNOVER LICENSE No. 12734 STATE OF NEW HAMPSHIRE PROFESSIONAL ENGINEER

SEAL

A/E FIRM NAME AND ADDRESS: Appledore Marine Engineering Inc. 600 State Street, Suite E Portsmouth, New Hampshire 03801

DSGN: JG/DG DRWN: SNB CHK: RMS

SUPV:

PRJMGR: CIV. STR.

MECH. ARCH.

ELEC.

SUBMITTED BY:

PRES. 12/23/2011

(SIGNED) (TITLE) (DATE)

A/E INFO

APPROVED

FOR COMMANDER NAVFAC / B.L.T.I.

ACTIVITY

SATISFACTORY TO DATE

DES · DRW · CHK ·

PROJECT MANAGER ·

IPT TECH. BRANCH HEAD ·

CHIEF ENG/ARCH (CORE) ·

DEPARTMENT OF THE NAVY
NAVAL FACILITIES ENGINEERING COMMAND
OCEAN CONSTRUCTION DIVISION

NAVAL FACILITIES ENGINEERING COMMAND SOUTHEAST
EAST COAST DET.

NAVAL AIR STATION KEY WEST, FLORIDA

# BULKHEAD 497 REPAIRS

CONCRETE PILE CAP DETAILS

SCALE: SCALE

EPROJECT NO.: ·

CONSTR. CONTR. NO. N62473–06–D–3004

NAVFAC DRAWING NO. 10005490

SHEET 13 OF 18

S-501

DRAWFORM REVISION: 7 AUGUST 2009

APPR | DATE | DESCRIPTION | SYM


FILE NAME: O:\502422 – USN Key West Central Mole Pier Coral\05 Supporting Documents\Drawings\S–501.dwg LAYOUT NAME: S–501 PLOTTED: Thursday, December 22, 2011 – 1:10pm USER: bsullivan

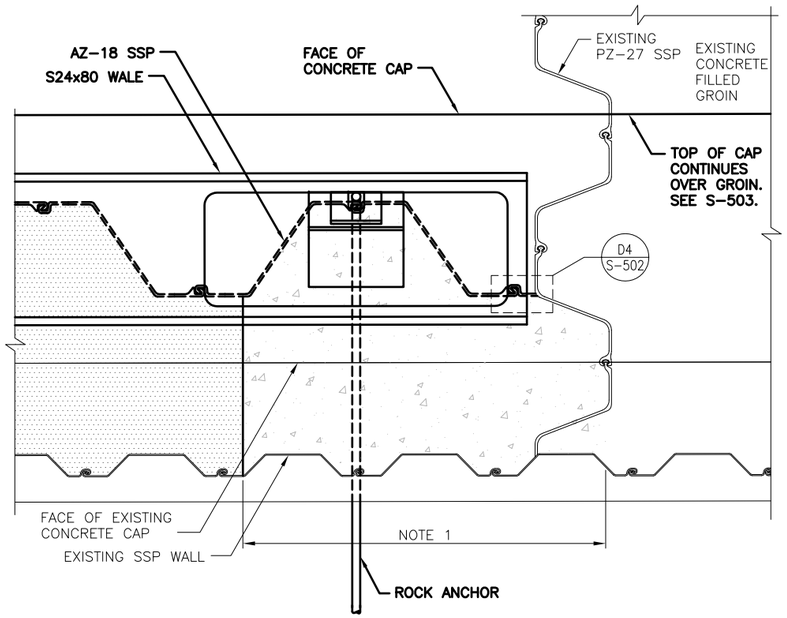


## PLAN AT GROIN CONNECTION (C1)

SCALE: 1" = 1'-0" S-101

0 1/2' 1' 2'

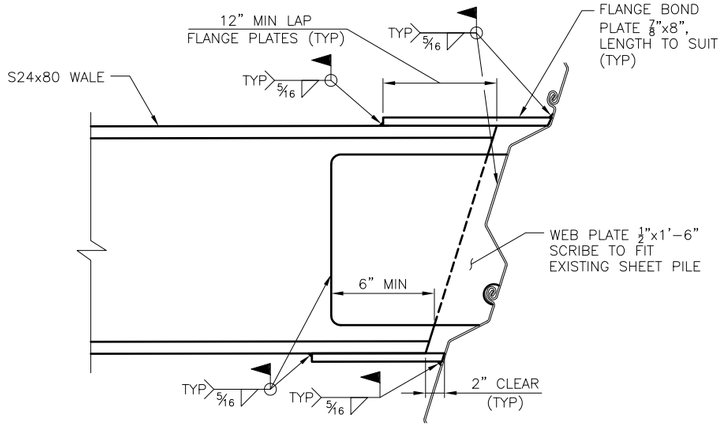


## WALE END CONNECTION DETAIL (D3)

SCALE: 1 1/2" = 1'-0" S-502

0 1/2' 1' 1 1/2'

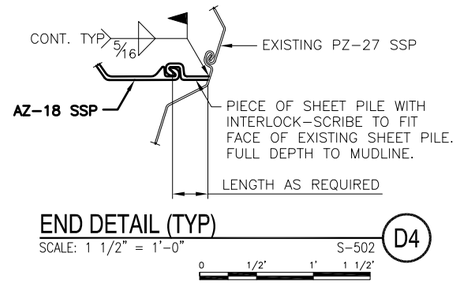


## END DETAIL (TYP) (D4)

SCALE: 1 1/2" = 1'-0" S-502

0 1/2' 1' 1 1/2'

NOTES:

1. CONCRETE SEAL WIDTH SHALL BE 4' MINIMUM.
2. SYMMETRICAL ABOUT CENTERLINE OF GROIN.
3. GROIN 1 AND 2 SIMILAR.
4. CUT BACK EXISTING CAP IN ORDER TO WELD TO EXISTING SSP. REPLACE CONCRETE REMOVED DURING SHEET PILE PLACEMENT.

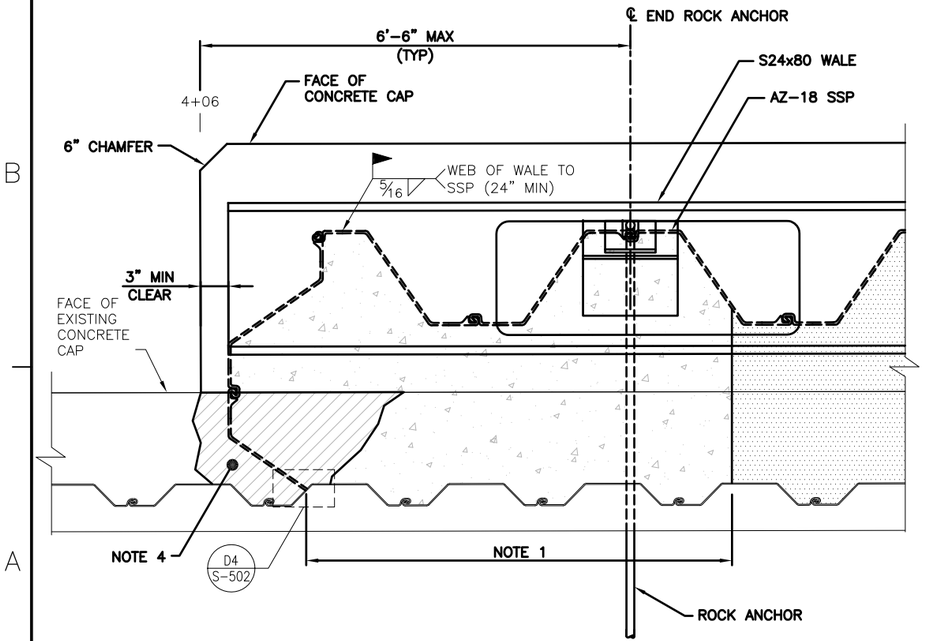


## PLAN - CONNECTION DETAIL @ STA 4+06 (A1)

SCALE: 1" = 1'-0" S-101

0 1/2' 1' 2'

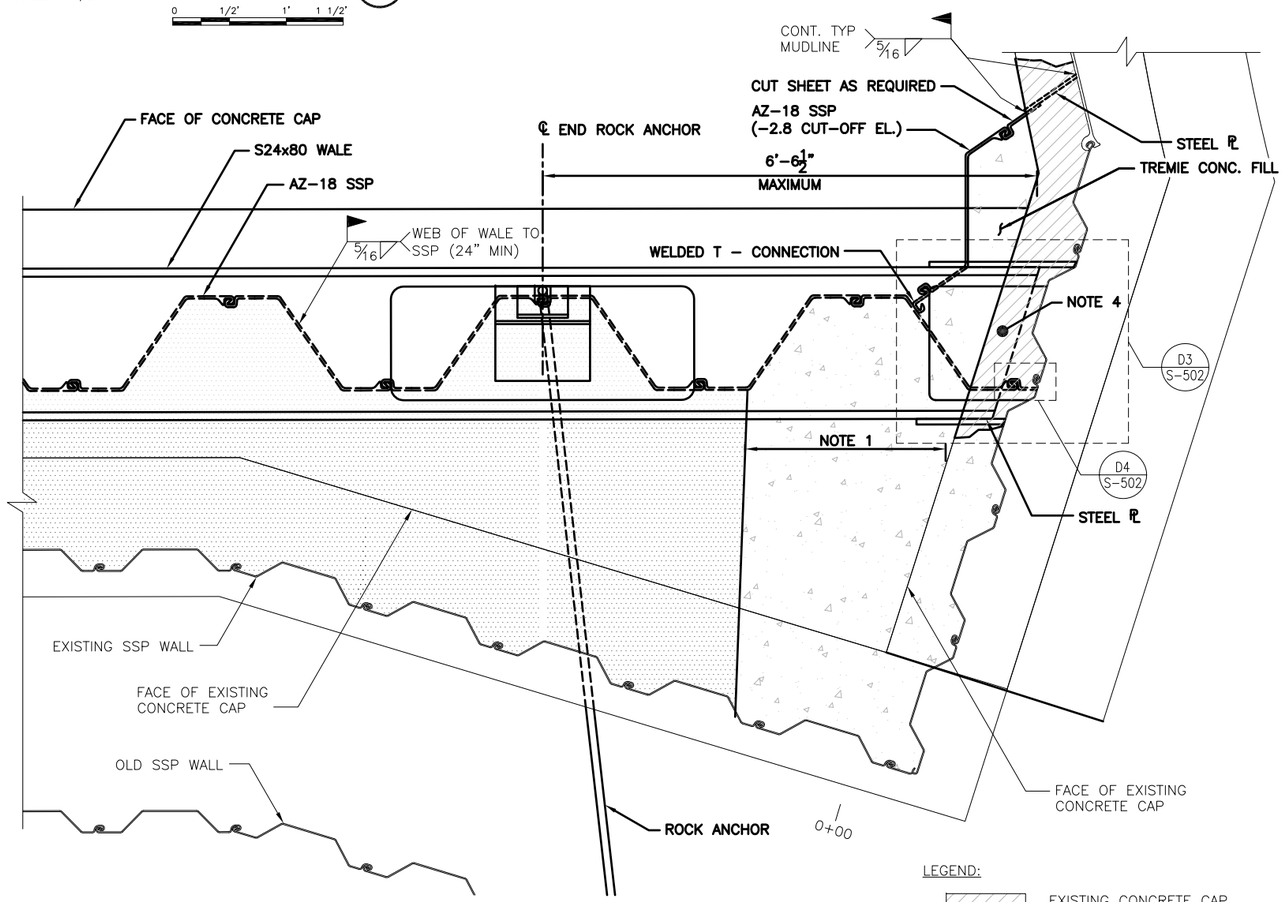


## PLAN - CONNECTION DETAIL @ STA 0+00 (A3)

SCALE: 1" = 1'-0" S-101

0 1/2' 1' 2'

LEGEND:

- EXISTING CONCRETE CAP REMOVAL (AS REQUIRED)
- CONCRETE SEAL EL. -2.2' TO TOE OF SSP
- FLOWABLE CONCRETE FILL EL. -2.2' TO TOE OF SSP

Appledore Marine Engineering Inc.
600 STATE STREET, SUITE E
PORTSMOUTH, NEW HAMPSHIRE 03801
(603) 766-1870 amel@appledoremarine.com

NAVFAC

ROBERT M. SNOVER LICENSE No. 72734 STATE OF FLORIDA PROFESSIONAL ENGINEER

SEAL

A/E FIRM NAME AND ADDRESS: Appledore Marine Engineering Inc., 600 State Street, Suite E, Portsmouth, New Hampshire 03801

DSGN: JG/DG DRWN: SNB CHK: RMS

SUPV:

PRJMGR. CIV. STR.

MECH. ARCH.

ELEC.

SUBMITTED BY:

PRES. 12/23/2011

(SIGNED) (TITLE) (DATE)

A/E INFO

APPROVED

FOR COMMANDER NAVFAC / B.L.T.L

ACTIVITY

SATISFACTORY TO DATE

DES. DRW. CHK.

PROJECT MANAGER

IPT TECH. BRANCH HEAD

CHIEF ENG/ARCH (CORE)

DEPARTMENT OF THE NAVY
NAVAL FACILITIES ENGINEERING COMMAND
OCEAN CONSTRUCTION DIVISION

NAVAL FACILITIES ENGINEERING COMMAND SOUTHEAST
EAST COAST DET.

NAVAL AIR STATION KEY WEST, FLORIDA

# BULKHEAD 497 REPAIRS

SHEET PILE CONNECTION DETAILS

SCALE: SCALE

EPROJECT NO.:

CONSTR. CONTR. NO. N62473-06-D-3004

NAVFAC DRAWING NO. 10005491

SHEET 14 OF 18

S-502

DRAWFORM REVISION: 7 AUGUST 2009

APPR | DATE | DESCRIPTION | SYM

FILE NAME: O:\502422 - USN Key West Central Mole Pier Coral\05 Supporting Documents\Drawings\S-502.dwg LAYOUT NAME: S-502 PLOTTED: Thursday, December 22, 2011 - 11:23am USER: bsullivan

FILE NAME: O:\502422 - USN Key West Control Mote Pier Coral\05 Supporting Documents\Drawings\S-503.dwg LAYOUT NAME: S-503 PLOTTED: Thursday, December 22, 2011 - 12:04pm USER: bsullivan

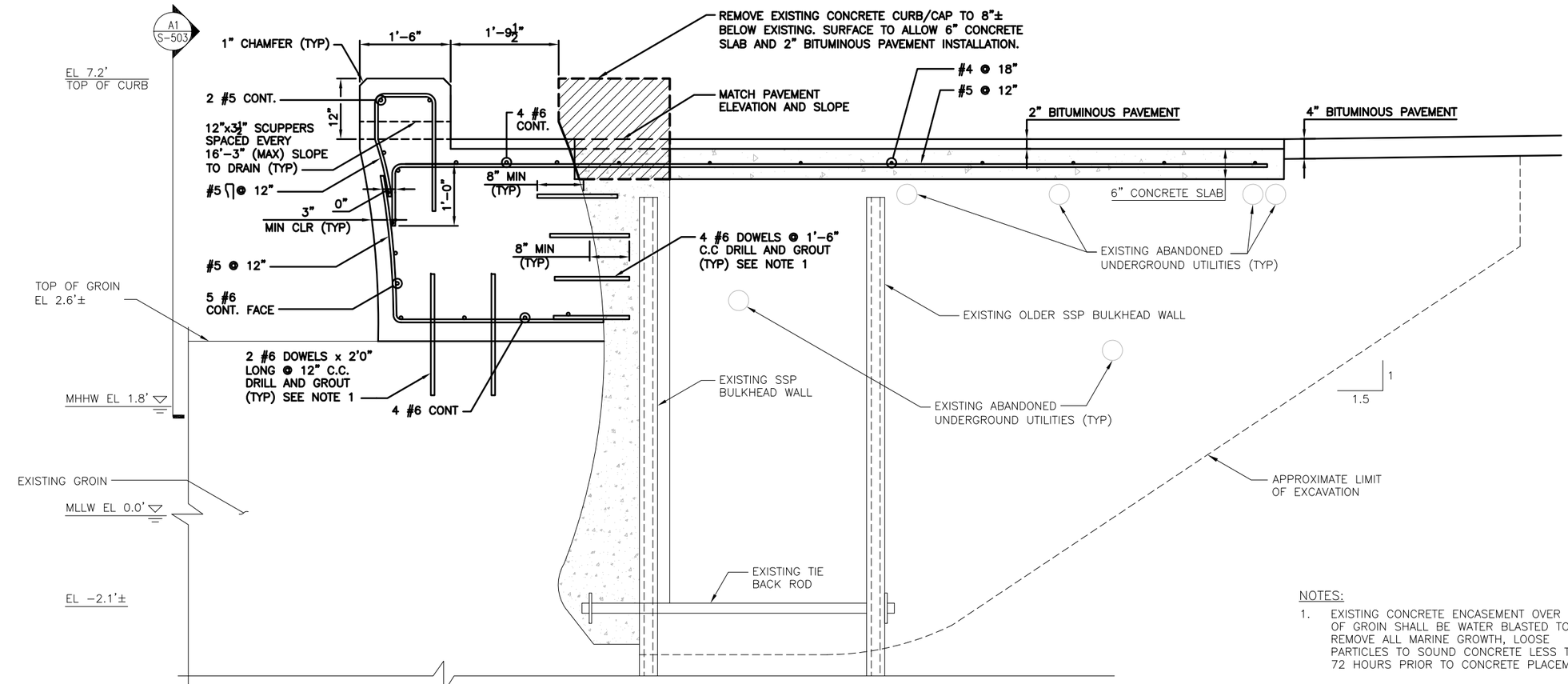


## SECTION
SCALE: 1" = 1'-0" — S-101 — B1

0 1/2' 1' 2

NOTES:

1. EXISTING CONCRETE ENCASEMENT OVER TOP OF GROIN SHALL BE WATER BLASTED TO REMOVE ALL MARINE GROWTH, LOOSE PARTICLES TO SOUND CONCRETE LESS THAN 72 HOURS PRIOR TO CONCRETE PLACEMENT.

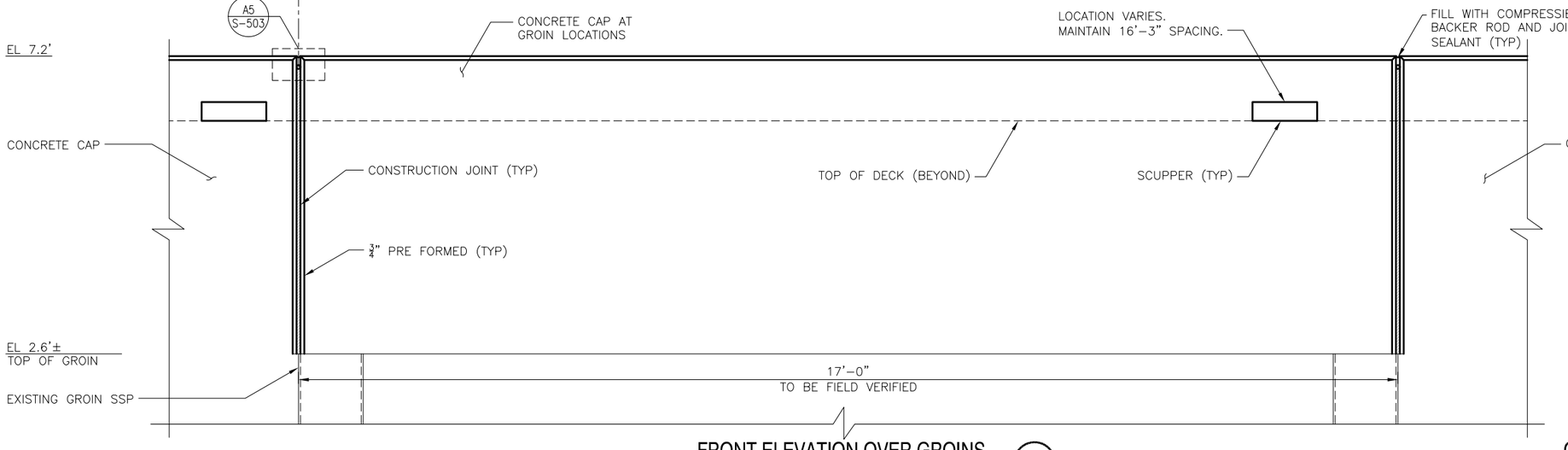


## FRONT ELEVATION OVER GROINS
SCALE: 1" = 1'-0" — S-503 — A1

0 1/2' 1' 2'

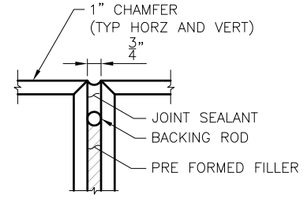


## CONSTRUCTION JOINT (TYP)
SCALE: 3" = 1'-0" — S-503 — A5

0 3" 6" 9"

Appledore Marine Engineering Inc.
600 STATE STREET, SUITE E.
PORTSMOUTH, NEW HAMPSHIRE 03801
(603) 766-1870 ame@appledoremarine.com

NAVFAC

ROBERT M. SNOVER LICENSE No. 72734 STATE OF FLORIDA PROFESSIONAL ENGINEER

SEAL

| | |
|---|---|
| A/E FIRM NAME AND ADDRESS | Appledore Marine Engineering Inc. 600 State Street, Suite E Portsmouth, New Hampshire 03801 |
| DSGN: JG/GG | DRWN: SNB CHK: RMS |
| SUPV: | |
| PM/MGR. | CIV. STR. |
| MECH. | ARCH. |
| ELEC. | |

SUBMITTED BY:

PRES. 12/23/2011
(SIGNED) (TITLE) (DATE)

A/E INFO

APPROVED

FOR COMMANDER NAVFAC / B.L.T.L.

ACTIVITY

SATISFACTORY TO DATE

DES · DRW · CHK ·

PROJECT MANAGER ·

IPT TECH. BRANCH HEAD ·

CHIEF ENG/ARCH (CORE) ·

·

DEPARTMENT OF THE NAVY
NAVAL FACILITIES ENGINEERING COMMAND
OCEAN CONSTRUCTION DIVISION

NAVAL FACILITIES ENGINEERING COMMAND SOUTHEAST
EAST COAST DET.

NAVAL AIR STATION KEY WEST, FLORIDA

# BULKHEAD 497 REPAIRS

GROIN DETAILS

| | |
|---|---|
| SCALE: | SCALE |
| EPROJECT NO.: | · |
| CONSTR. CONTR. NO. | N62473-06-D-3004 |
| NAVFAC DRAWING NO. | 10005492 |
| SHEET | 15 OF 18 |

S-503

DRAWFORM REVISION: 7 AUGUST 2009

APPR | DATE | DESCRIPTION | SYM

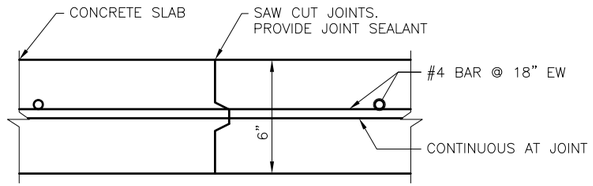


CONSTRUCTION JOINT
SCALE: 3" = 1'-0" S-504 D2

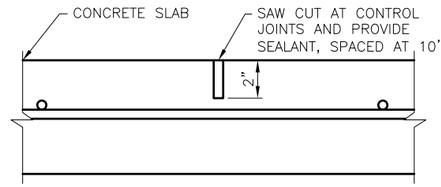


CONTROL JOINT
SCALE: 3" = 1'-0" S-504 D3

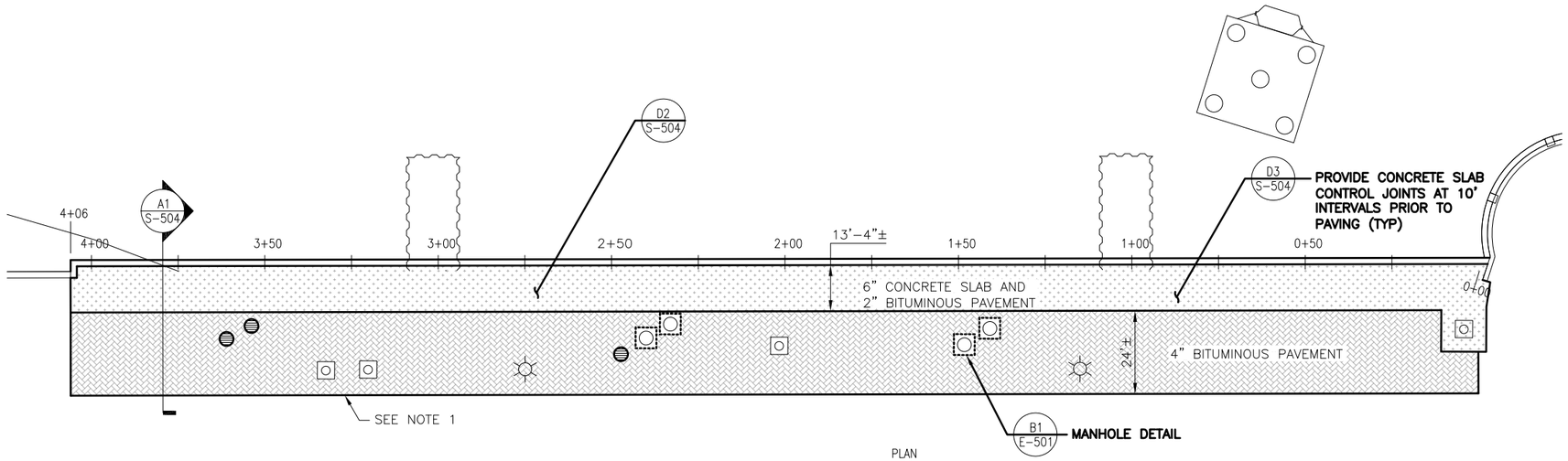


PAVING PLAN
SCALE: 1" = 20'-0" 0 10' 20' 40'

PLAN NORTH

NOTE:

1. CUT PAVEMENT FULL DEPTH WITH NEAT, CLEAN, PARALLEL, STRAIGHT LINES WITHIN LIMITS OF WORK.

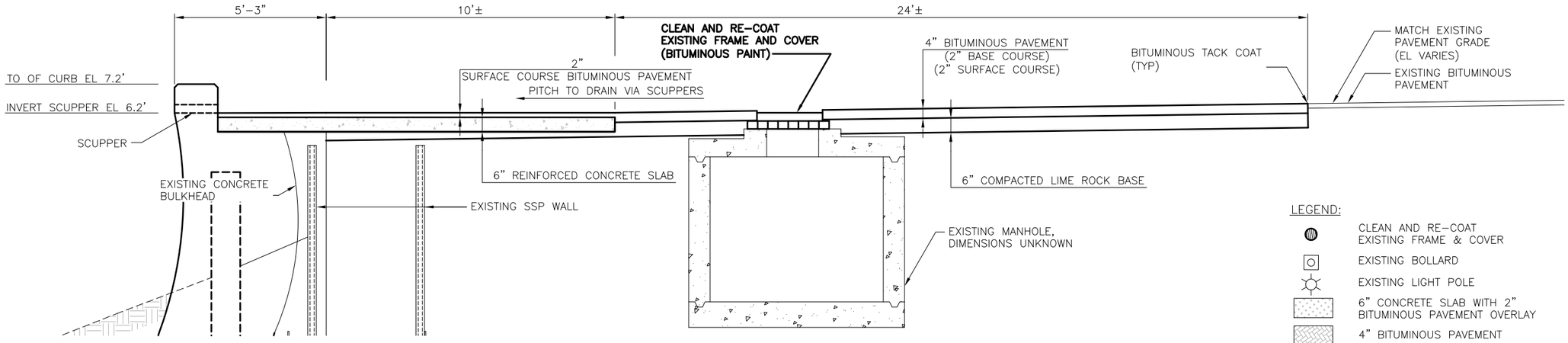


PAVEMENT DETAIL
SCALE: 1/2" = 1'-0" S-504 A1
0 1' 2' 4'

LEGEND:

- CLEAN AND RE-COAT EXISTING FRAME & COVER
- EXISTING BOLLARD
- EXISTING LIGHT POLE
- 6" CONCRETE SLAB WITH 2" BITUMINOUS PAVEMENT OVERLAY
- 4" BITUMINOUS PAVEMENT
- EXISTING MANHOLE **TO BE REPLACED**


Appledore Marine Engineering Inc.
600 STATE STREET, SUITE E
PORTSMOUTH, NEW HAMPSHIRE 03801
(603) 766-1870 amel@appledoremarine.com


| APPR | DATE | DESCRIPTION | SYM |
|---|---|---|---|

NAVFAC

ROBERT M. SNOVER LICENSE No. 72734 STATE OF FLORIDA PROFESSIONAL ENGINEER

SEAL

A/E FIRM NAME AND ADDRESS: Appledore Marine Engineering Inc. 600 State Street, Suite E Portsmouth, New Hampshire 03801

DSGN: JG/DG DRWN: SNB CHK: RMS

SUPV:

PRJMGR. CIV. STR.

MECH. ARCH.

ELEC.

SUBMITTED BY:

PRES. 12/23/2011

(SIGNED) (TITLE) (DATE)

A/E INFO

APPROVED

FOR COMMANDER NAVFAC / B.L.T.L

ACTIVITY

SATISFACTORY TO DATE

DES - DRW - CHK -

PROJECT MANAGER

IPT TECH. BRANCH HEAD

CHIEF ENG/ARCH (CORE)

DEPARTMENT OF THE NAVY
NAVAL FACILITIES ENGINEERING COMMAND
OCEAN CONSTRUCTION DIVISION

NAVAL FACILITIES ENGINEERING COMMAND SOUTHEAST
EAST COAST DET.

NAVAL AIR STATION KEY WEST, FLORIDA

# BULKHEAD 497 REPAIRS

PAVING DETAILS

SCALE: SCALE

EPROJECT NO.:

CONSTR. CONTR. NO.
N62473-06-D-3004

NAVFAC DRAWING NO.
10005493

SHEET 16 OF 18

S-504

DRAWFORM REVISION: 7 AUGUST 2009


FILE NAME: O:\502422 - USN Key West Central Mole Pier Coral\05 Supporting Documents\Drawings\S-504.dwg LAYOUT NAME: S-504 PLOTTED: Thursday, December 22, 2011 - 11:23am USER: bsullivan

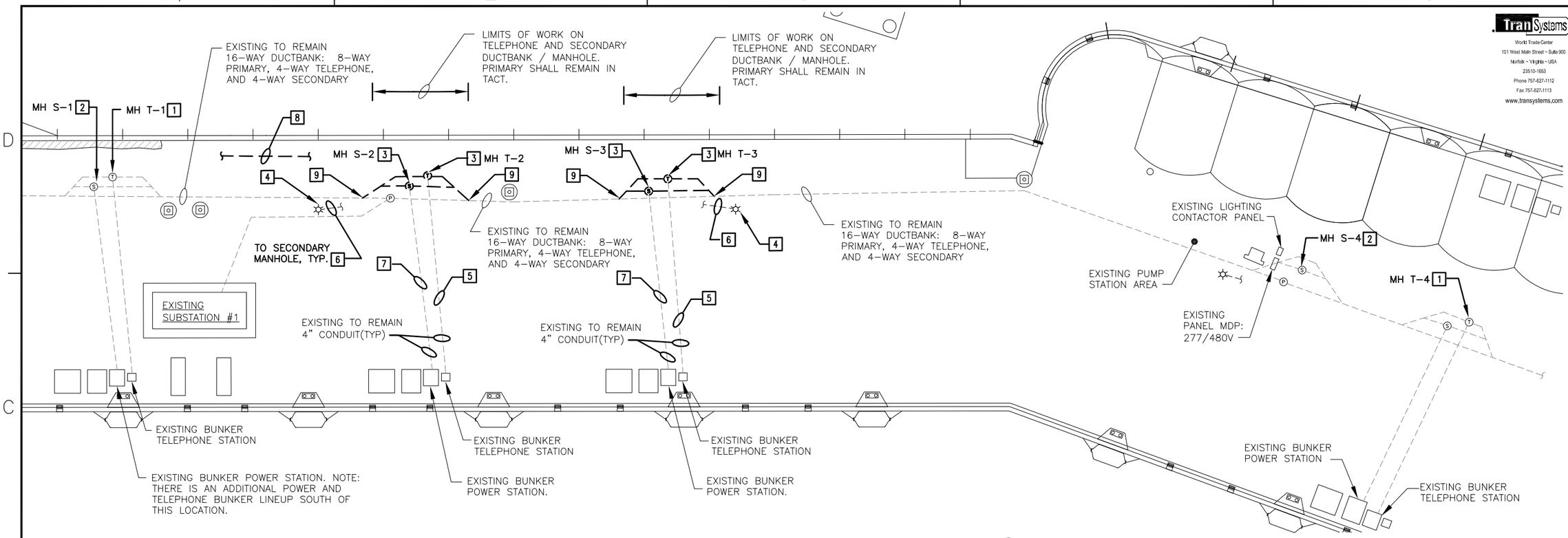


## BULKHEAD 497 PARTIAL PLAN - ELECTRICAL

SCALE: 1" = 20'-0"

## GENERAL NOTES

1. REFER TO THE SHEET C–101 FOR LIMITS OF CONSTRUCTION, IN PARTICULAR, THE 20' ROADWAY THAT MUST BE KEPT CLEAR FOR VEHICLE TRAFFIC. COORDINATE WITH THE GOVERNMENT WHEN CRANE USE IS PLANNED AND/OR OTHER PROCESSES THAT MAY IMPEDE THE ROADWAY.
2. MANHOLE NUMBERS SHOWN ON THIS SHEET ARE FOR INSTRUCTION PURPOSES ONLY.
3. AT&T WILL PERFORM ALL WORK ASSOCIATED WITH CUTTING AND REPLACING OF THEIR TELECOMMUNICATIONS CABLING. THE CONTRACTOR SHALL PROVIDE ALL MANHOLES AND DUCTBANK. THE CONTRACTOR SHALL BE RESPONSIBLE FOR COORDINATING WORK EFFORTS WITH AT&T, AND SHALL PAY ALL FEES ASSOCIATED WITH AT&T REPLACING THE INDICATED SECTIONS OF CABLES. AT&T CONTACT IS HERB BRADSHAW, 305–296–9077.
4. CONTRACTOR SHALL TRACE OUT AND LABEL ALL 277/480V BRANCH CIRCUITS IN MANHOLES S1 THROUGH S4.
5. MAINTAIN SERVICE TO PIER LIGHTING FIXTURES NORTH OF MANHOLE S–4 WHEN SOUTH HEADING CIRCUITS ARE TEMPORARILY CUT TO PERFORM MANHOLE AND DUCTBANK WORK. ALL PIER LIGHTING FIXTURES ARE SERVED BY A SINGLE LIGHTING CONTACTOR IN THE ENCLOSURE ADJACENT TO PANEL MDP (#6 CONDUCTORS).
6. EACH OF THE POWER BUNKER STATIONS IS SERVED BY A 25A, 2–POLE CIRCUIT BREAKER IN PANEL MDP (#8 CONDUCTORS TO EACH STATION).
7. COORDINATE WITH THE COAST GUARD AND THE CITY OF KEY WEST FOR OUTAGES ASSOCIATED WITH THEIR INDIVIDUAL LIGHT POLE MOUNTED CAMERA SYSTEMS. THE CONTRACTOR SHALL DISCONNECT AND RECONNECT CAMERA SYSTEM(S) CABLING DURING MANHOLE AND DUCTBANK REPLACEMENT. THE GOVERNMENT SHALL PROVIDE DETAILED INFORMATION ABOUT THE COAST GUARD AND CITY OF KEY WEST'S CAMERA SYSTEMS PRIOR TO BID. THE INFORMATION SHALL INCLUDE POWER REQUIREMENTS AND CONNECTION LOCATIONS, AND SIGNAL TRANSMISSION REQUIREMENTS.

## [X] DRAWING NOTES

1. COORDINATE WITH AT&T FOR THE CUTTING OF THE EXISTING TELECOMMUNICATIONS CABLING IN THIS MANHOLE. EXISTING TELECOMMUNICATIONS CABLING BETWEEN MANHOLES T–1 TO T–4 TO BE REMOVED AND REPLACED BY AT&T (SEE GENERAL NOTE #3).
2. AFTER TRACING AND LABELING ALL BRANCH CIRCUITS, CUT ALL SECONDARY CABLES IN MANHOLE. EXISTING SECONDARY CABLES BETWEEN MANHOLES S–1 TO S–4 TO BE REMOVED AND REPLACED WITH #8 RWH ELECTRICAL WIRE.
3. EXISTING TELEPHONE OR SECONDARY MANHOLE TO BE REMOVED AND REPLACED. ADDITIONALLY, REMOVE AND REPLACE EXISTING SECTIONS OF DUCTBANK BACK TO THE EXISTING 16–WAY DUCTBANK (PORTION TO BE REMOVED SHOWN IN BOLD). REFER TO SHEET E–501 FOR MANHOLE AND DUCTBANK DETAIL.
4. PROVIDE PORTABLE GENERATOR POLE LIGHT FOR THIS LOCATION DURING SECONDARY SERVICE INTERRUPTION. MINIMUM POLE HEIGHT SHALL BE 20'–0". NOTE: THERE ARE (2) ADDITIONAL LIGHT POLES SOUTH OF THE PROJECT AREA THAT WILL REQUIRE PORTABLE GENERATOR POLE LIGHTS (TOTAL OF 4).
5. COORDINATE WITH AT&T FOR THE REMOVAL AND REPLACEMENT OF THE EXISTING TELECOMMUNICATIONS CABLING BETWEEN MANHOLES T–2 AND THE EXISTING BUNKER TELEPHONE STATION, AND FOR T–3 AND ITS CORRESPONDING BUNKER TELEPHONE STATION. THE EXISTING CONDUIT FOR THESE TELECOMMUNICATION CABLES SHALL BE REUSED. EXTEND THE EXISTING CONDUIT AS NEEDED TO CONNECT TO THE REPLACEMENT MANHOLES.
6. REMOVE THE EXISTING SECONDARY CABLES SERVING THE EXISTING LIGHT POLE FIXTURES. EXISTING CONDUITS SHALL BE REUSED. EXTEND THE EXISTING CONDUIT AS NEEDED TO CONNECT TO THE REPLACEMENT MANHOLES. PROVIDE #6 RWH ELECTRICAL WIRE AND CONNECT LIGHTING FIXTURE TO OPERATE AS BEFORE.
7. REMOVE THE EXISTING SECONDARY CABLES SERVING THE EXISTING BUNKER POWER STATION. EXISTING CONDUITS SHALL BE REUSED. EXTEND THE EXISTING CONDUIT AS NEEDED TO CONNECT TO THE REPLACEMENT MANHOLES. PROVIDE #8 RWH ELECTRICAL WIRE AND CONNECT BUNKER TO OPERATE AS BEFORE.
8. REMOVE DIRECT BURIED (IN CONDUIT) COMMUNICATIONS LINE WITHIN THE LIMITS OF CONSTRUCTION. THE GOVERNMENT INDICATED THAT THE LINE IS ABANDONED, BUT THE CONTRACTOR SHALL VERIFY ITS STATUS AND INFORM THE GOVERNMENT IF IT IS NOT ABANDONED AND INACTIVE.
9. COORDINATE WITH NAVFAC TO TEMPORARILY DE–ENERGIZE 13.8kV MEDIUM VOLTAGE FEEDERS WHEN THE DEMOLITION OF THE SECONDARY AND TELEPHONE DUCTBANKS APPROACHES THE MEDIUM VOLTAGE RUNS, IN ORDER TO PREVENT ACCIDENTAL INTRUSION INTO THE MEDIUM VOLTAGE CONDUITS. CAREFULLY EXCAVATE SECONDARY AND TELEPHONE DUCTBANKS AND MANHOLES.

## LEGEND:

- EXISTING LIGHT POLES.
- EXISTING TELEPHONE MANHOLE (AT&T CABLING)
- EXISTING SECONDARY MANHOLE (277/480V CIRCUITS)
- EXISTING PRIMARY MANHOLE (13.8KV CIRCUITS)
- EXISTING BOLLARD
- EXISTING DOUBLE BITT
- 4–WAY (AND SECTIONS OF 8–WAY) DUCTBANK, SEE DETAIL C3 / E–501
- MANHOLE SEE DETAIL B1 / E–501

## GRAPHIC SCALE:

1" = 20'  20 0 20 40  SCALE FEET

TranSystems
World Trade Center
101 West Main Street – Suite 900
Norfolk – Virginia – USA
23510-1653
Phone 757-627-1112
Fax 757-627-1113
www.transystems.com

NAVFAC

GREGORY A. POTTS 108425 LICENSED PROFESSIONAL ENGINEER STATE OF TEXAS SEAL 12/23/2011

A/E FIRM: Anderson Mason Engineering Inc.
LAN: 1SW | ADDRESS: 600 State Street, Suite 5 | CITY/STATE: Portsmouth, New Hampshire 03801
DSGN: JC/CC | DRWN: SNB | CHK: RMS
SURV.
CIVIL | CIV. STR.
MECH. | ARCH.
ELEC.
SUBMITTED BY: Gregory A. Potts 12/23/2011
(SIGNED) (TITLE) (DATE) A/E INFO

APPROVED
FOR COMMANDER NAVFAC / B.L.T.L.
ACTIVITY
SATISFACTORY TO DATE
DES JMR | DRW JMR | CHK GAP
PROJECT MANAGER
IPT TECH. BRANCH HEAD
CHIEF ENG/ARCH (CORE)

DEPARTMENT OF THE NAVY
NAVAL FACILITIES ENGINEERING COMMAND
OCEAN CONSTRUCTION DIVISION
NAVAL FACILITIES ENGINEERING COMMAND SOUTHEAST
EAST COAST DET.
NAVAL AIR STATION KEY WEST, FLORIDA
BULKHEAD 497 REPAIRS
ELECTRICAL AND TELECOMMUNICATIONS PLAN

SCALE: SCALE
EPROJECT NO.:
CONSTR. CONTR. NO. N62473–06–D–3004
NAVFAC DRAWING NO. 10005813
SHEET 17 OF 18
E-101
DRAWFORM REVISION: 7 AUGUST 2009

| APPR | DATE | DESCRIPTION | SYM |
|---|---|---|---|

FILE NAME: G:\NF1\U0149\E&I\Drawings\E–101.dwg LAYOUT NAME: E–101 PLOTTED: Thursday, December 22, 2011 – 1:38pm USER: jmrobinson

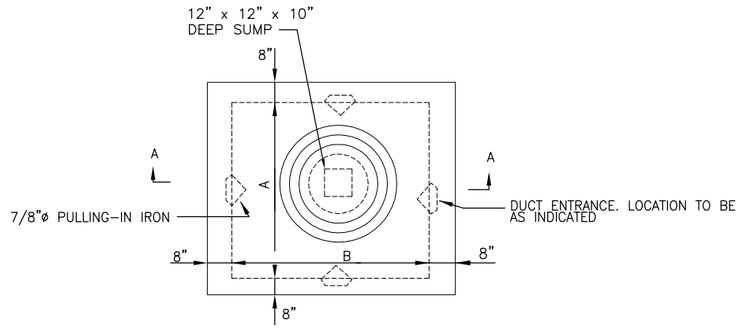


PLAN

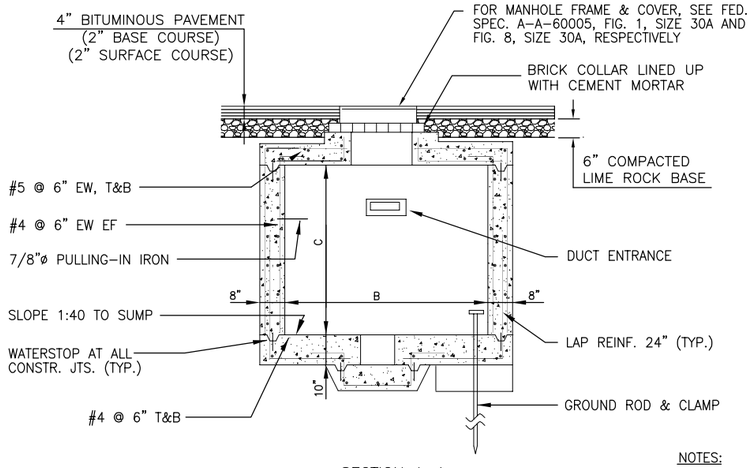


SECTION A-A

| MANHOLE DIMENSIONS | | | |
|---|---|---|---|
| TYPE | A | B | C (AT HIGH PT.) |
| 3 | 6'-0" | 6'-0" | 6'-6" |

STANDARD ELECTRICAL MANHOLE (TRAFFIC)
TYPES 3 & 4

## MANHOLE DETAIL

SCALE: NTS E-101 (B1)

NOTES:

1. MANHOLE AND COVERS SHALL BE DESIGNED FOR MAXIMUM WHEEL LOAD IN ACCORDANCE WITH AASHTO HS20-44.
2. FOR DETAILS OF CABLE RACKS, DUCT ENTRANCE AND PULLING-IN IRONS, SEE PLATE UG-7.
3. MINIMUM CONCRETE COMPRESSIVE STRENGTH SHALL BE 4000 PSI.

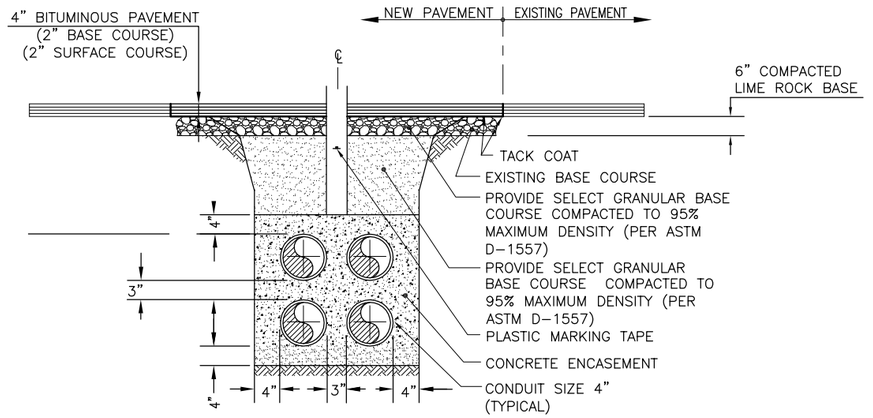


## 4-WAY DUCTBANK DETAIL

SCALE: NTS E-101 (C3)

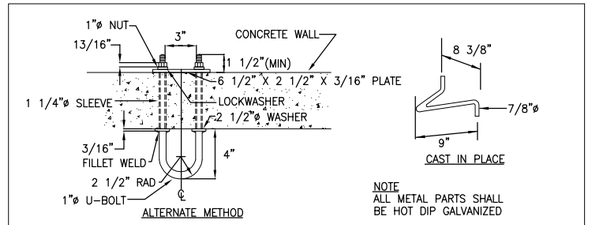


DETAIL OF PULLING-IN IRON

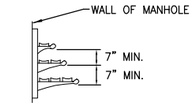


TYPICAL CABLE RACK

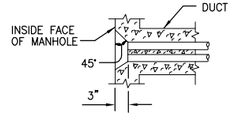


TYPICAL DUCT ENTRANCE

DETAILS
(PULLING-IN IRONS, CABLE RACK AND DUCT ENTRANCE)

| SKETCH DATE | JUNE 2002 | STYLE | UG-7 |
|---|---|---|---|


TranSystems
World Trade Center
101 West Main Street - Suite 900
Norfolk - Virginia - USA
23510-1653
Phone 757-627-1112
Fax 757-627-1113
www.transystems.com


| APPR | DATE | DESCRIPTION | STM |
|---|---|---|---|
| | | | |

NAVFAC

12/29/2011
STATE OF TEXAS
GREGORY A. POTTS
108425
LICENSED
PROFESSIONAL ENGINEER
12/29/2011
SEAL

| | |
|---|---|
| A/E FIRM NAME AND ADDRESS | Applebaum Martin Engineering Inc. 600 State Street, Suite E Portsmouth, New Hampshire 03801 |
| DSGN: JG/GG | DRWN: SNB CHK: RMG |
| SUPV: | |
| PRJMGR. | CIV. STR. |
| MECH. | ARCH. |
| ELEC. | |

SUBMITTED BY:
Gregory A. Potts (SIGNED) EXCOR (TITLE) 12/27/2011 (DATE)
A/E INFO

APPROVED
FOR COMMANDER NAVFAC / B.L.T.L
ACTIVITY
SATISFACTORY TO DATE
DES JMR DRW JMR CHK GAP
PROJECT MANAGER
IPT TECH. BRANCH HEAD
CHIEF ENG/ARCH (CORE)

DEPARTMENT OF THE NAVY
NAVAL FACILITIES ENGINEERING COMMAND
OCEAN CONSTRUCTION DIVISION
NAVAL FACILITIES ENGINEERING COMMAND SOUTHEAST
EAST COAST DET.
NAVAL AIR STATION KEY WEST, FLORIDA

# BULKHEAD 497 REPAIRS

ELECTRICAL AND TELECOMMUNICATIONS DETAILS

| | |
|---|---|
| SCALE: | SCALE |
| EPROJECT NO.: | |
| CONSTR. CONTR. NO. | N62473-06-D-3004 |
| NAVFAC DRAWING NO. | 10005814 |
| SHEET | 18 OF 18 |

E-501

DRAWFORM REVISION: 7 AUGUST 2009

# TRUMAN HARBOR REPAIRS

# NAVAL AIR FACILITY
# KEY WEST, FLORIDA

## CONSTRUCTION CONTRACT NO. N62467-03-C-0154

## SPECIFICATION NO. 06-03-0154

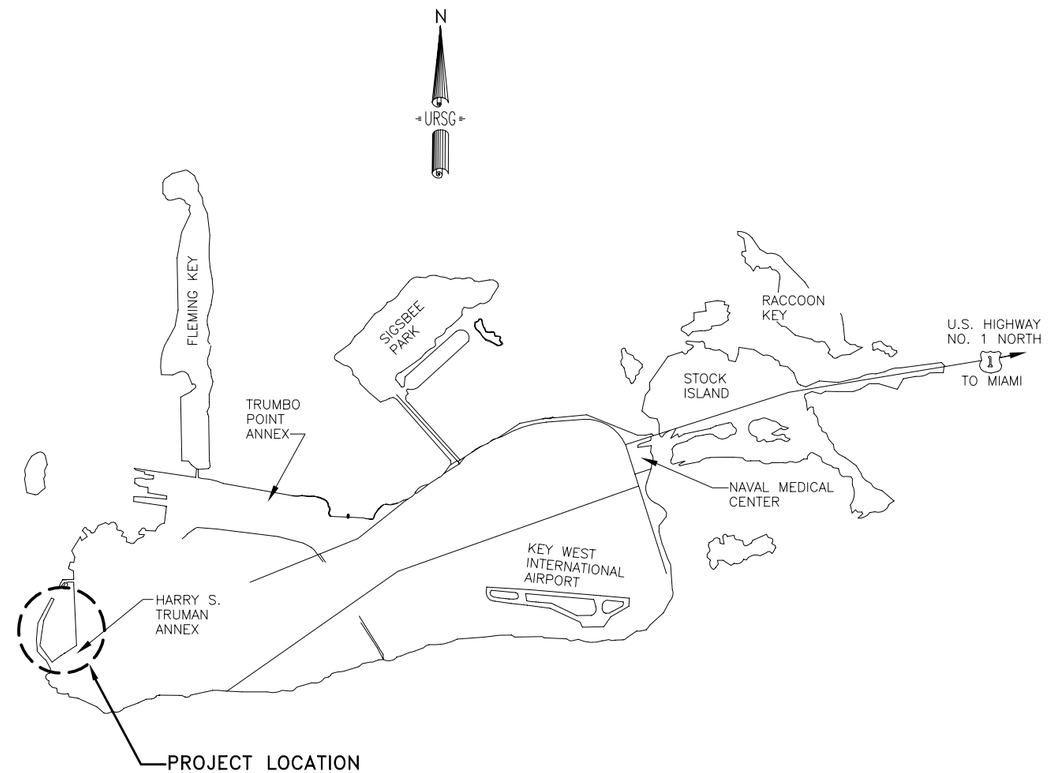


VICINITY MAP
SCALE: 1" = 1/2 MILE

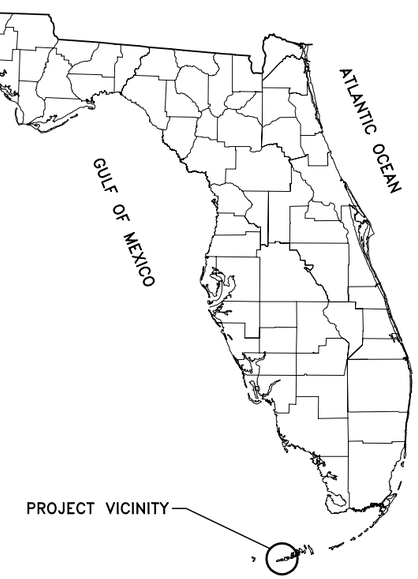


FLORIDA MAP
NOT TO SCALE

GRAPHIC SCALE

1/2 MILE 0 1/2 MILE

SCALE: 1" = 1/2 MILE

| URS Group, Inc. | | | |
|---|---|---|---|
| 7650 West Courtney Campbell Causeway<br>Tampa, FL 33607 | | NO. 00000002 | |
| DSGN ZICHLIN | DR ZICHLIN | CH ENGR WALKER | DR WALKER |
| SUPV WALKER | | SUBMITTED BY : | DATE |
| | | TECHNICAL BRANCH | |
| | | FPE | |

DRAWING REVISIONS

| Rev. | Description | Prep By | Date | Apprvd. |
|---|---|---|---|---|
| | AS-BUILT, NO CORRECTIONS | FKW | 03/01/05 | CRS |

NAVAL AIR FACILITY KEY WEST, FLORIDA

TRUMAN HARBOR REPAIRS

COVER SHEET

APPROVED

DATE EFD FOR COMMANDER, NAVFAC

Naval Facilities Engineering Command
Southern Division
Charleston, South Carolina

RECORD DRAWING

| | |
|---|---|
| RECORD DRAWING DATE | 1 MARCH 2005 |
| CODE I.D. NO. | 80091 |
| DRAWING SIZE: | D |
| SPEC.NO. 06-03-0154 | |
| CONSTRN. CONTR. NO. | N62467-03-C-0154 |
| NAVFAC DRAWING NO. | 5429422 |
| SHEET | 1 OF 140 |

G-1

N:\NAVY\KEYWEST\TRUMAN HARBOR\AS-BUILT\G-1.DWG 02/16/05 09:49

REDUCED DRAWING – VERIFY SCALE REPRESENTATIONS

# INDEX OF DRAWINGS

## GENERAL DRAWINGS

| NAVFAC DWG. NO. | SHEET NO. | SHEET TITLE |
|---|---|---|
| 5429422 | G-1 | COVER SHEET |
| 5429423 | G-2 | INDEX OF DRAWINGS |
| 5429424 | G-3 | LEGEND |
| 5429425 | G-4 | ABBREVIATIONS |
| 5429426 | G-5 | GENERAL NOTES |
| 5429427 | G-6 | LOCATION PLAN AND SHEET LAYOUT |
| 5429428 | G-7 | RECORD DRAWING SOIL BORINGS AND LAB TEST DATA |
| 5429429 | G-8 | RECORD DRAWING SOIL BORINGS AND LAB TEST DATA |
| 5429430 | G-9 | RECORD DRAWING SOIL BORINGS |
| 5429431 | G-10 | WALL THICKNESS DATA - 2002 |
| 5429432 | G-11 | PHASING PLAN AND NOTES |
| 5429433 | G-12 | OUTER MOLE BERTHED VESSEL ACTIVITY AREA |

## CIVIL DRAWINGS

| | | |
|---|---|---|
| 5429434 | C-1 | DEMOLITION LOCATION PLAN |
| 5429435 | C-2 | SOUTH MOLE WATERFRONT PHOTOGRAPHS |
| 5429436 | C-10 | NORTH MOLE DEMOLITION |
| 5429437 | C-11 | CENTRAL MOLE DEMOLITION |
| 5429438 | C-12 | SOUTH MOLE DEMOLITION |
| 5429439 | C-13 | SHORE DEMOLITION |
| 5429440 | C-14 | PIER 8 DEMOLITION |
| 5429441 | C-15 | DEMOLITION NOTES |
| 5429442 | C-20 | SECTIONS AND DETAILS |
| 5429443 | C-21 | SHORE AREA PAVEMENT REPAIR |

## UTILITY DRAWINGS

| | | |
|---|---|---|
| 5429444 | U-1 | UTILITY LOCATION PLAN |
| 5429445 | U-2 | UTILITY SITE PLAN |
| 5429446 | U-3 | DEMOLITION/EXISTING UTILITY FLOW DIAGRAM |
| 5429447 | U-4 | DEMOLITION/EXISTING UTILITY FLOW DIAGRAM |
| 5429448 | U-5 | UTILITY FLOW DIAGRAM |
| 5429449 | U-6 | UTILITY FLOW DIAGRAM |
| 5429450 | U-7 | NORTH MOLE UTILITY PLAN |
| 5429451 | U-8 | CENTRAL MOLE UTILITY PLAN |
| 5429452 | U-9 | PIER 8 UTILITY PLAN AND SECTION |
| 5429453 | U-10 | MOLE UTILITY PLAN AND SECTIONS |
| 5429454 | U-11 | MOLE UTILITY PLAN AND SECTIONS |
| 5429455 | U-12 | PIER 8 UTILITY STATION PLAN AND SECTIONS |
| 5429456 | U-13 | MOLE SEWAGE LIFT STATION SITE |
| 5429457 | U-14 | PIER 8 SECTIONS AND DETAILS |
| 5429458 | U-15 | NEW WATER MAIN PLAN AND DETAILS |
| 5429459 | U-16 | LIFT STATION PLAN AND SECTION |

## ELECTRICAL DRAWINGS

| | | |
|---|---|---|
| 5429460 | E-0 | ABBREVIATIONS AND LEGEND |
| 5429461 | E-1 | ELECTRICAL LOCATION PLAN |
| 5429462 | E-2 | PRIMARY ONE LINE DIAGRAM |
| 5429463 | E-3 | SECONDARY ONE LINE DIAGRAM-SUBSTATION #1 |
| 5429464 | E-4 | SECONDARY ONE LINE DIAGRAM-SUBSTATION #2 |
| 5429465 | E-5 | SECONDARY ONE LINE DIAGRAM-SUBSTATION #3 |
| 5429466 | E-6 | SECONDARY ONE LINE DIAGRAM-SUBSTATION #4 |
| 5429467 | E-7 | SYSTEM TIME-CURRENT COORDINATION CURVES |
| 5429468 | E-8 | SCHEMATIC WIRING DIAGRAMS |
| 5429469 | E-9 | KEY NOTES FOR DRAWINGS E-10 THROUGH E-13 |
| 5429470 | E-10 | ELECTRICAL PLAN NORTH MOLE |
| 5429471 | E-11 | ELECTRICAL PLAN CENTRAL MOLE |
| 5429472 | E-12 | ELECTRICAL PLAN SOUTH MOLE |
| 5429473 | E-13 | ELECTRICAL PLAN SHORE |
| 5429474 | E-14A | SUBSTATIONS #1 AND #2 DETAILS-SHEET 1 OF 2 |
| 5429475 | E-14B | SUBSTATIONS #1 AND #2 DETAILS-SHEET 2 OF 2 |
| 5429476 | E-15A | SUBSTATION #3 DETAILS-SHEET 1 OF 2 |
| 5429477 | E-15B | SUBSTATION #3 DETAILS-SHEET 2 OF 2 |
| 5429478 | E-16A | SUBSTATION #4 DETAILS-SHEET 1 OF 2 |
| 5429479 | E-16B | SUBSTATION #4 DETAILS-SHEET 2 OF 2 |
| 5429480 | E-17 | PRIMARY SWITCHES "A" AND "B" DETAILS |
| 5429481 | E-18A | MOLE PIER POWER OUTLET IGLOO DETAILS - SHT 1 OF 2 |
| 5429482 | E-18B | MOLE PIER POWER OUTLET IGLOO DETAILS - SHT 2 OF 2 |
| 5429483 | E-19A | LC/TELECOMM. OUTLET ASSEMBLY DETAILS - SHT 1 OF 3 |
| 5429484 | E-19B | LC/TELECOMM. OUTLET ASSEMBLY DETAILS - SHT 2 OF 3 |
| 5429485 | E-19C | LC/TELECOMM. OUTLET ASSEMBLY DETAILS - SHT 3 OF 3 |
| 5429486 | E-20A | MOLE LIGHTING AND RELATED DETAILS-SHEET 1 OF 2 |
| 5429487 | E-20B | MOLE LIGHTING AND RELATED DETAILS-SHEET 2 OF 2 |
| 5429488 | E-21 | DUCT BANK SECTIONS-SHEET 1 OF 4 |
| 5429489 | E-22 | DUCT BANK SECTIONS-SHEET 2 OF 4 |
| 5429490 | E-23 | DUCT BANK SECTIONS-SHEET 3 OF 4 |
| 5429491 | E-24 | DUCT BANK SECTIONS-SHEET 4 OF 4 |
| 5429492 | E-25 | MISCELLANEOUS DETAILS |
| 5429493 | E-29 | KEY NOTES FOR DRAWING E-30 |
| 5429494 | E-30 | ELECTRICAL PLAN PIER 8 |
| 5429495 | E-31 | PIER 8 POWER OUTLET ASSEMBLY DETAILS |
| 5429496 | E-32 | PIER 8 TELECOMM. OUTLET ASSEMBLY DETAILS |
| 5429497 | E-33A | PIER 8 LIGHTING AND RELATED DETAILS-SHEET 1 OF 2 |
| 5429498 | E-33B | PIER 8 LIGHTING AND RELATED DETAILS-SHEET 2 OF 2 |
| 5429499 | E-34 | DUCT BANK SECTIONS |
| 5429500 | E-40 | CATHODIC PROTECTION |
| 5429501 | E-41 | CATHODIC PROTECTION DETAILS |

## STRUCTURAL DRAWINGS

| NAVFAC DWG. NO. | SHEET NO. | SHEET TITLE |
|---|---|---|
| 5429502 | S-1 | STRUCTURAL LOCATION PLAN |
| 5429503 | S-2 | NORTH MOLE TIP EXISTING WALLS |
| 5429504 | S-3 | NORTH MOLE TIP REMOVAL DETAILS |
| 5429505 | S-4 | NORTH MOLE TIP REMOVAL DETAILS |
| 5429506 | S-5 | MOLE CROSS SECTION RECORD DRAWING |
| 5429507 | S-7 | NORTH MOLE NEW WALL PLAN |
| 5429508 | S-8 | NORTH MOLE NEW WALL DETAILS |
| 5429509 | S-9 | NORTH MOLE NEW WALL DETAILS |
| 5429510 | S-10 | NORTH MOLE REPAIRS |
| 5429511 | S-11 | CENTRAL MOLE REPAIRS |
| 5429512 | S-12 | SOUTH MOLE REPAIRS |
| 5429513 | S-13 | OUTER MOLE BERTH REPAIR DETAILS |
| 5429514 | S-14 | OUTER MOLE RECORD DRAWING |
| 5429515 | S-18 | GROIN 1 THRU 5 REPAIRS |
| 5429516 | S-19 | SOUTH AND CENTRAL MOLE WALL CAP REPAIRS |
| 5429517 | S-20 | MOORING PLAN |
| 5429518 | S-21 | BREASTING DOLPHIN STRUCTURE |
| 5429519 | S-22 | DRILLED SHAFT DETAILS |
| 5429520 | S-27 | ELECTRICAL UTILITY STRUCTURES DETAILS |
| 5429521 | S-28 | ELECTRICAL UTILITY STRUCTURES DETAILS |
| 5429522 | S-29 | FENDER SYSTEM DETAILS |
| 5429523 | S-30 | PIER 8 REPAIRS - TOP PLAN |
| 5429524 | S-31 | PIER 8 REPAIRS - TOP PLAN |
| 5429525 | S-32 | PIER 8 REPAIRS - BOTTOM PLAN |
| 5429526 | S-33 | PIER 8 REPAIRS - BOTTOM PLAN |
| 5429527 | S-34 | PIER 8 REPAIRS - RECORD DRAWING |
| 5429528 | S-35 | PIER 8 REPAIRS - RECORD DRAWING |
| 5429529 | S-36 | PIER 8 REPAIRS - RECORD DRAWING |
| 5429530 | S-37 | PIER 8 REPAIRS - RECORD DRAWING |
| 5429531 | S-38 | PIER 8 REPAIRS - RECORD DRAWING |
| 5429532 | S-39 | CONCRETE REPAIR DETAILS AND NOTES |
| 5429533 | S-40 | PIER 8 REPAIRS - PILE JACKET DETAILS |
| 5429534 | S-41 | DETAILS |
| 5429535 | S-50 | LIFT STATION STRUCTURAL DETAILS |

## SOUTH QUAY WALL DRAWINGS - BID OPTION

| | | |
|---|---|---|
| 5429536 | XG-1 | SOUTH QUAY WALL LOCATION PLAN |
| 5429537 | XC-1 | SOUTH QUAY WALL DEMOLITION |
| 5429538 | XC-2 | SOUTH QUAY WALL DEMOLITION |
| 5429539 | XC-3 | SOUTH QUAY WALL DEMOLITION NOTES |
| 5429540 | XC-4 | SOUTH QUAY WALL CIVIL SITE PLAN |
| 5429541 | XC-5 | SOUTH QUAY WALL CIVIL SITE PLAN |
| 5429542 | XC-6 | SOUTH QUAY WALL BULKHEAD SECTIONS AND DETAILS |
| 5429543 | XC-7 | SOUTH QUAY WALL TEST LOCATIONS |
| 5429544 | XC-8 | SOUTH QUAY WALL BORING LOCATIONS |
| 5429545 | XC-9 | SOUTH QUAY WALL DEMOLITION & DUCT BANK REPLACEMENT |
| 5429546 | XC-10 | SOUTH QUAY WALL DEMOLITION DETAILS |
| 5429547 | XC-11 | SOUTH QUAY WALL PERIMETER FENCE EXTENSION |
| 5429548 | XC-12 | SOUTH QUAY WALL FENCE DETAILS |
| 5429549 | XC-13 | SOUTH QUAY WALL FENCE DETAILS |
| 5429550 | XC-14 | SOUTH QUAY WALL TRAVERSE MAP |
| 5429551 | XM-1 | SOUTH QUAY WALL MECHANICAL PLAN |
| 5429552 | XM-2 | SOUTH QUAY WALL MECHANICAL PLAN |
| 5429553 | XM-3 | SOUTH QUAY WALL UTILITY DETAILS |
| 5429554 | XE-1 | SOUTH QUAY WALL ELECTRICAL PLAN |
| 5429555 | XS-1 | SOUTH QUAY WALL STRUCTURAL PLAN |
| 5429556 | XS-2 | SOUTH QUAY WALL STRUCTURAL PLAN |
| 5429557 | XS-3 | SOUTH QUAY WALL BULKHEAD DETAILS |
| 5429558 | XS-4 | SOUTH QUAY WALL BULKHEAD SECTIONS AND DETAILS |
| 5429559 | XS-5 | SOUTH QUAY WALL BULKHEAD SECTIONS AND DETAILS |
| 5429560 | XS-6 | SOUTH QUAY WALL DETAILS |
| 5429561 | XS-7 | SOUTH QUAY WALL DETAILS |

URS Group, Inc.
7650 West Courtney Campbell Causeway
Tampa, FL 33607
NO. 00000002

| DRAWING REVISIONS | | | | |
|---|---|---|---|---|
| Rev. | Description | Prep By | Date | Approvd. |
| 1 | REVISED PER AMENDMENT 0003 | FKW | 04/04/03 | CRS |
| 2 | CORRECTED TO AS-BUILT | FKW | 03/01/05 | CRS |

DSGN ZICHLIN DR ZICHLIN CHK WALKER
SUPV WALKER QH ENGR WALKER
SUBMITTED BY: DATE
TECHNICAL BRANCH
FPE

KEY WEST, FLORIDA

NAVAL AIR FACILITY

TRUMAN HARBOR REPAIRS

INDEX OF DRAWINGS

DATE
APPROVED
EFD FOR COMMANDER, NAVFAC

Naval Facilities Engineering Command
Southern Division
Charleston, South Carolina

RECORD DRAWING

RECORD DRAWING DATE
1 MARCH 2005
CODE I.D. NO. 80091
DRAWING SIZE: D
SPEC.NO. 06-03-0154
CONSTRN. CONTR. NO.
N62467-03-C-0154
NAVFAC DRAWING NO.
5429423
SHEET 2 OF

G-2

N:\NAVY\KEYWEST\TRUMAN HARBOR\AS-BUILT\G-2.DWG 02/16/05 10:42

REDUCED DRAWING - VERIFY SCALE REPRESENTATIONS

SHEET C-11
SHEET U-8
SHEET E-11
SHEET S-11

SOUTH MOLE COVERAGE

CENTRAL MOLE BERTH

OUTER MOLE BERTH

NORTH MOLE BERTH

CENTRAL MOLE COVERAGE

SHEET C-10
SHEET U-7
SHEET E-10
SHEET S-10

NORTH MOLE COVERAGE

GULF OF MEXICO

CONTRACTOR LAYDOWN AND STAGING AREA

SHEET C-12
SHEET E-12
SHEET S-12

FORT ZACHARY TAYLOR

SHEET C-13
SHEET E-13

SOUTH QUAY WALL

PIER 8

SHEET C-14
SHEET U-9
SHEET E-30
SHEETS S-30 TO S-33

TRUMAN HARBOR

NAVY PROPERTY LINE

SHORE COVERAGE

CHICKIE HUT

STORAGE

WATER TOWER

PARKING

ATHLETIC FIELD

COURT 4166

COURT 4167

RADIO TOWER

AREA UNDER CONSTRUCTION

TAMIRAND LN.

PORTER LN.

SOUTHARD STREET

EMMA STREET

ANGELA STREET

CHARMAN ST.

MCKAIB AVE.

FLEMING STREET

EATON STREET

CAROLINE STREET

WHITEHEAD STREET

W/C

CONTRACTOR HAUL ROUTE

AREA MAP – TRUMAN HARBOR
NOT TO SCALE

REDUCED DRAWING – VERIFY SCALE REPRESENTATIONS

N:\NAVY\KEYWEST\TRUMAN HARBOR\AS-BUILT\G-6.DWG 02/15/05 16:20

URS Group, Inc.
7650 West Courtney Campbell Causeway
Tampa, FL 33607 NO. 00000002

| | DSGN ZICHLIN | DR ZICHLIN | CHK WALKER |
|---|---|---|---|
| | SUPV WALKER | CHT ENGR WALKER | |

SUBMITTED BY : DATE
TECHNICAL BRANCH
FPE

DRAWING REVISIONS

| Rev. | Description | Prep By | Date | Apprvd. |
|---|---|---|---|---|
| | AS-BUILT, NO CORRECTIONS | FKW | 03/01/05 | CRS |

KEY WEST, FLORIDA

NAVAL AIR FACILITY

# TRUMAN HARBOR REPAIRS

LOCATION PLAN AND SHEET LAYOUT

APPROVED DATE

FED. FOR COMMANDER, NAVFAC

Naval Facilities Engineering Command
Southern Division
Charleston, South Carolina

RECORD DRAWING

| | |
|---|---|
| RECORD DRAWING DATE | 1 MARCH 2005 |
| CODE I.D. NO. | 80091 |
| DRAWING SIZE: | D |
| SPEC.NO. 06-03-0154 | |
| CONSTRN. CONTR. NO. | N62467-03-C-0154 |
| NAVFAC DRAWING NO. | 5429427 |
| SHEET 6 OF | |

G-6

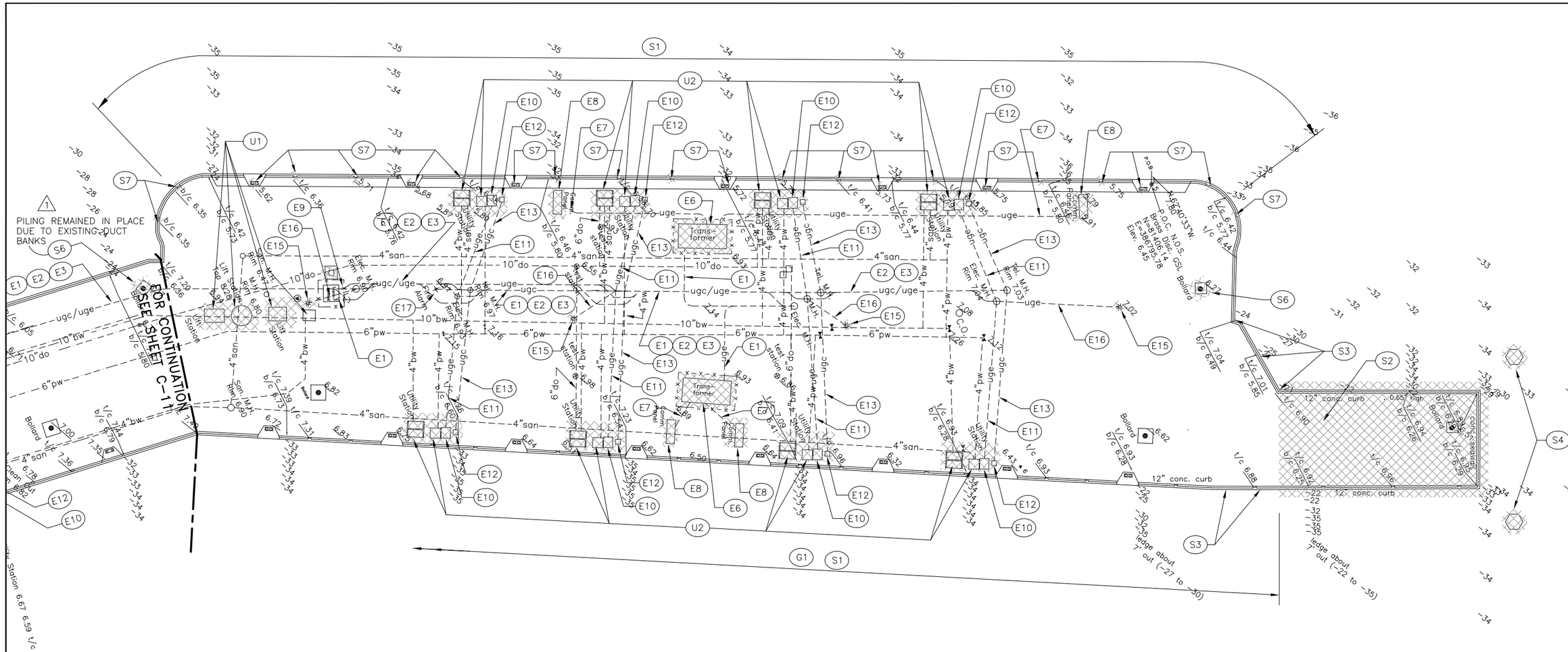


NOTES:

1. SEE SHEET C-15 FOR DEMOLITION NOTES INDICATED BY ◯

GRAPHIC SCALE

30' 0 30'

REDUCED DRAWING – VERIFY SCALE REPRESENTATIONS

N:\NAVY\KEYWEST\TRUMAN HARBOR\AS-BUILT\C-10.DWG 02/15/05 16:22

**URS Group, Inc.**
7650 West Courtney Campbell Causeway
Tampa, FL 33607 NO. 00000002

DSGN WALKER DR ZICHLIN CHK WALKER
SUPV WALKER CH ENGR WALKER
SUBMITTED BY: DATE
TECHNICAL BRANCH
FPE

DRAWING REVISIONS

| Rev. | Description | Prep By | Date | Apprvd. |
|---|---|---|---|---|
| 1 | CORRECTED TO AS-BUILT | FKW | 03/01/05 | CRS |

NAVAL AIR FACILITY

KEY WEST, FLORIDA

# TRUMAN HARBOR REPAIRS

NORTH MOLE DEMOLITION

APPROVED DATE

EFD FOR COMMANDER, NAVFAC

Naval Facilities Engineering Command
Southern Division
Charleston, South Carolina

RECORD DRAWING

RECORD DRAWING DATE 1 MARCH 2005
CODE I.D. NO. 80091
DRAWING SIZE: D
SPEC.NO. 06-03-0154
CONSTRN. CONTR. NO. N62467-03-C-0154
NAVFAC DRAWING NO. 5429436
SHEET 15 OF

C-10

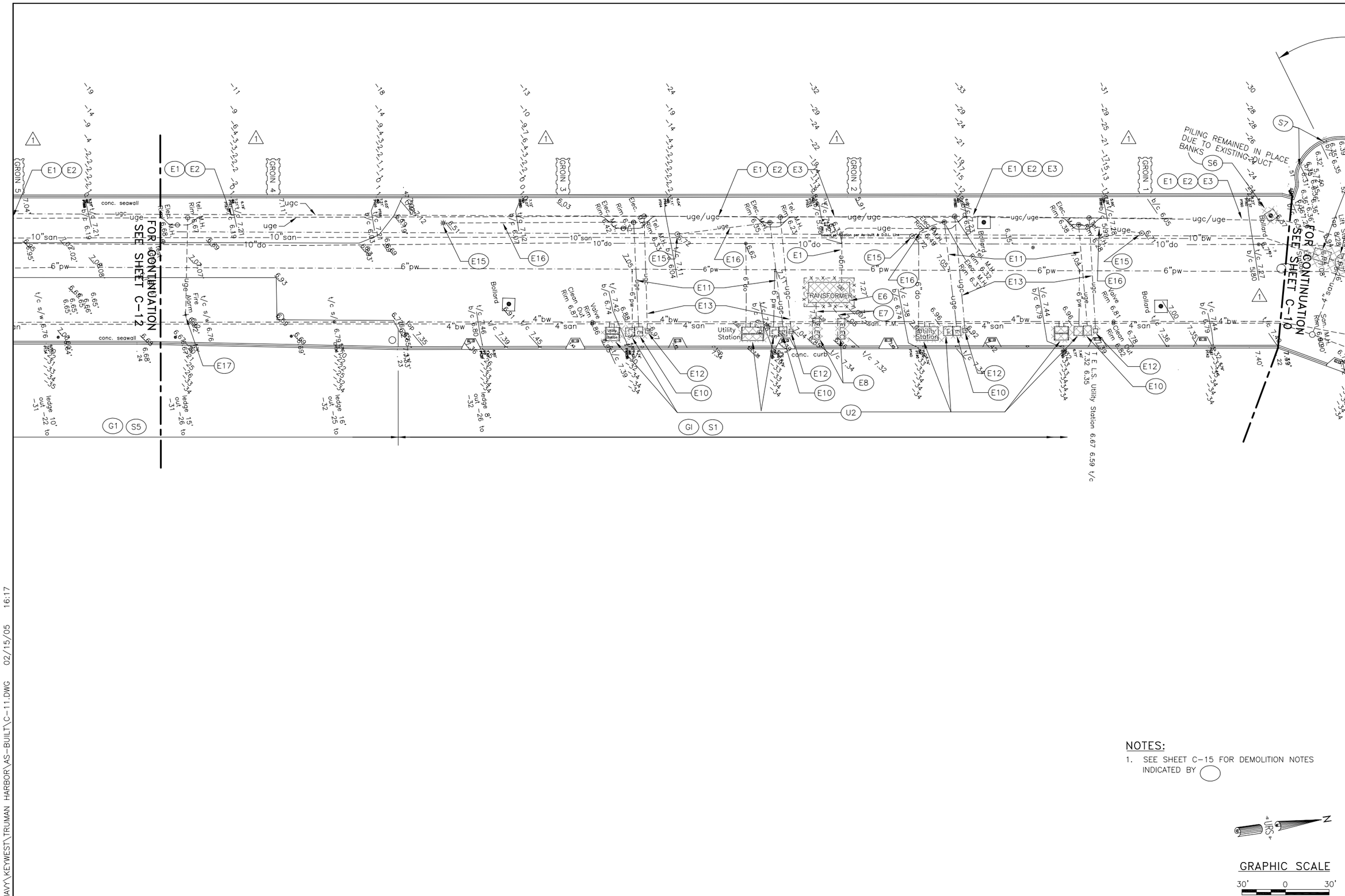


NOTES:

1. SEE SHEET C-15 FOR DEMOLITION NOTES INDICATED BY ⬭

GRAPHIC SCALE

30' 0 30'

REDUCED DRAWING – VERIFY SCALE REPRESENTATIONS

N:\NAVY\KEYWEST\TRUMAN HARBOR\AS-BUILT\C-11.DWG 02/15/05 16:17

| URS Group, Inc. | 7650 West Courtney Campbell Causeway Tampa, FL 33607 | NO. 00000002 | |
|---|---|---|---|
| DSGN WALKER | DR ZICHLIN | CHK WALKER | |
| SUPV WALKER | CH ENGR WALKER | | |
| SUBMITTED BY: | | | DATE |
| TECHNICAL BRANCH | | | |
| FPE | | | |

DRAWING REVISIONS

| Rev. | Description | Prep By | Date | Apprvd. |
|---|---|---|---|---|
| 1 | REVISED PER AMENDMENT 0003 | FKW | 04/04/03 | CRS |
| | AS-BUILT, NO CORRECTIONS | FKW | 03/01/05 | CRS |

NAVAL AIR FACILITY

# TRUMAN HARBOR REPAIRS

CENTRAL MOLE DEMOLITION

APPROVED DATE EFD, FOR COMMANDER, NAVFAC

Naval Facilities Engineering Command
Southern Division
Charleston, South Carolina

**RECORD DRAWING**

| | |
|---|---|
| RECORD DRAWING DATE | 1 MARCH 2005 |
| CODE I.D. NO. | 80091 |
| DRAWING SIZE: | D |
| SPEC.NO. | 06-03-0154 |
| CONSTRN. CONTR. NO. | N62467-03-C-0154 |
| NAVFAC DRAWING NO. | 5429437 |
| SHEET | 16 OF |

C-11

# DEMOLITION NOTES

(LOCATIONS INDICATED ON SHEETS C-10 THROUGH C-14)

## GENERAL DEMOLITION

(G1) SEE STRUCTURAL DRAWINGS FOR REMOVAL LIMITS ASSOCIATED WITH SOUTH AND CENTRAL MOLE CONCRETE BULKHEAD ENCAPSULATION AND CAP AND PIER 8 STRUCTURE REPAIRS. SEE SOUTH QUAY WALL DRAWINGS (X-SERIES) FOR REMOVAL LIMITS ASSOCIATED WITH SOUTH QUAY WALL.

(G2) KNOWN CONCRETE PAVEMENT AREAS BEHIND SOUTH MOLE WALL ARE INDICATED ON DRAWINGS. CONTRACTOR SHALL ANTICIPATE ENCOUNTERING ASPHALT PAVEMENT, STRUCTURES, OR ASPHALT MIXED WITH LIMEROCK OR SOIL IN ALL OTHER AREAS TO BE DEMOLISHED OR EXCAVATED DURING WALL REPAIR.

## UTILITY DEMOLITION

1

(U1) REMOVE ALL LIFT STATION COMPONENTS INCLUDING WET WELL, LIFT STATION VALVE VAULT, OIL WATER SEPARATOR, BILGE WATER VALVE PIT, BURIED 4000 GALLON CAPACITY FIBERGLASS WASTE OIL TANK AND ASSOCIATED APPURTENANCES INCLUDING ALL FOUNDATIONS, STRUCTURES, PIPING, TANKS AND SUPPORT ITEMS. CAP AND PROTECT HORIZONTAL UNDERGROUND UTILITIES FOR REUSE TO SUPPORT NEW CONSTRUCTION (COORDINATE UTILITY DEMOLITION WITH U-DRAWINGS).

(U2) CUT AND REMOVE SANITARY, BILGE, DIESEL OIL AND POTABLE WATER UTILITY STATION COMPONENTS INCLUDING ALL FOUNDATIONS, STRUCTURES, PIPING, AND SUPPORT ITEMS. CAP AND PROTECT HORIZONTAL UNDERGROUND UTILITIES FOR REUSE TO SUPPORT NEW CONSTRUCTION (COORDINATE UTILITY CUTS AND DEMOLITION WITH U-DRAWINGS).

(U3) REMOVE ALL EXISTING SANITARY, BILGE AND POTABLE WATER COMPONENTS ABOVE AND BELOW DECK. COMPONENTS INCLUDE FRP, PVC AND CS PIPING, VALVES, METERS, SUPPORTS, COUPLINGS, AND ASSOCIATED APPURTENANCES. CAP AND PROTECT HORIZONTAL PIPING TO REMAIN. MODIFY EXISTING CURBING AND FOUNDATIONS AS REQUIRED. COORDINATE UTILITY REMOVAL AND NEW WORK WITH U-DRAWINGS.

1

## 2 AMENDMENT 0005

1.ADD THE FOLLOWING AT THE ENDS OF ELECTRICAL DEMOLITION NOTES E6 AND E14: "THE BASE PUBLIC WORKS DEPARTMENT HAS REPORTED THAT THE UNIT SUBSTATION AND PAD MOUNT STYLE OIL FILLED TRANSFORMERS HAVE BEEN TESTED FOR PCB'S AND HAVE BEEN FOUND TO QUALIFY AS NON-PCB CONTAMINATED. HOWEVER, ALL TRANSFORMERS SPECIFIED TO BE HANDLED AND/OR DISPOSED OF MUST HAVE RECENT CERTIFICATION AS NON-PCB CONTAMINATED AND THEREFORE MUST BE RETESTED. PROVIDE FOR RETESTING AND RECERTIFICATION OF TRANSFORMERS AS NON-PCB CONTAMINATED PRIOR TO HANDLING AND/OR DISPOSAL."

2.ADD THE FOLLOWING AT THE ENDS OF ELECTRICAL DEMOLITION NOTES E1, E4, E5 AND E18: "THE CONTRACTOR SHALL ASSUME THAT THE MEDIUM-VOLTAGE CABLES ASSOCIATED WITH EACH PRIMARY CIRCUIT MAKE ONE COMPLETE LOOP AROUND THE INSIDE OF EACH PRIMARY MANHOLE, AND THAT THE PORTIONS OF EACH MEDIUM-VOLTAGE CABLE EXPOSED INSIDE EACH PRIMARY MANHOLE ARE INDIVIDUALLY WRAPPED ALONG THEIR ENTIRE LENGTHS WITH ASBESTOS CONTAINING FIREPROOFING TAPE. PROVIDE FOR THE PROPER HANDLING, TESTING, AND DISPOSAL OF THE SEGMENTS OF MEDIUM-VOLTAGE CABLE WRAPPED WITH ASBESTOS CONTAINING FIREPROOFING TAPE."

3.ADD THE FOLLOWING AT THE ENDS OF ELECTRICAL DEMOLITION NOTES E15, E28 AND E29: "THE CONTRACTOR SHALL ASSUME THAT LUMINAIRE BALLASTS ARE PCB CONTAMINATED. PROVIDE FOR THE PROPER HANDLING AND DISPOSAL OF THESE BALLASTS."

## ELECTRICAL DEMOLITION

(E1) DE-ENERGIZE, DISCONNECT AND REMOVE 3-350kcmil MEDIUM VOLTAGE CABLES FROM 4" PVC CONDUIT.

(E2) DE-ENERGIZE, DISCONNECT AND REMOVE SECONDARY WIRING SERVING EACH MINIPOWER ZONE COMBINATION TRANSFORMER/PANELBOARD INSTALLATION.

1

(E3) DISCONNECT AND REMOVE COMMUNICATIONS CABLING SERVING EACH COMMUNICATIONS PEDESTAL FROM 2-4" PVC CONDUITS. DO NOT REMOVE TELEPHONE TRUNK LINE IF TELEPHONE SERVICE PROVIDER DETERMINES IT CAN BE REUSED. COORDINATE WORK WITH TELEPHONE SERVICE PROVIDER.

(E4) DE-ENERGIZE, DISCONNECT AND REMOVE 3-350kcmil MEDIUM VOLTAGE CABLES BACK THROUGH MANHOLE NOS. 56, 55, 21, 20 AND 22, TO UPSTREAM MEDIUM VOLTAGE CIRCUIT BREAKER IN EXISTING MEDIUM VOLTAGE SUBSTATION.

(E5) DE-ENERGIZE, DISCONNECT AND REMOVE 3-250kcmil MEDIUM VOLTAGE CABLES BACK TO UPSTREAM SPLICE IN MANHOLE NO. 56.

(E6) DE-ENERGIZE AND REMOVE UNIT SUBSTATION CONSISTING OF A 15kV MEDIUM VOLTAGE METAL ENCLOSED LOAD INTERRUPTER SWITCH, A 3,000kVA OA / 4,200kVA FFA RATED, 13.8kV DELTA PRI., 480V DELTA SEC., 3PH. OIL FILLED SUBSTATION STYLE TRANSFORMER; AND A 5,000A, 480V, 3PH. SWITCHBOARD CONTAINING FOUR (4) 1600A AND ONE 200A DRAWOUT CIRCUIT BREAKERS, METERING COMPARTMENT, BATTERY CHARGER SYSTEM COMPARTMENT AND APPURTENANCES. REMOVE CONCRETE PAD. PROTECT HORIZONTAL PORTIONS OF UNDERGROUND CONDUITS FOR EXTENSION UP INTO NEW CONCRETE PAD.

(E7) DE-ENERGIZE, DISCONNECT AND REMOVE 3-500kcmil PH. AND 1-#3 GND FROM EACH OF 4-4" PVC CONDUITS. TWO (2) OF THE 4" PVC CONDUITS ALSO CONTAIN A 9C/#12 CONTROL CABLE IN ADDITION TO THE FEEDER WIRES.

1

(E8) DE-ENERGIZE, DISCONNECT AND REMOVE IGLOO CONSISTING OF EIGHT (8) 500A, 480V, 3PH. RECEPTACLES, TWO (2) CONTROL PANELS, REINFORCED CONCRETE STRUCTURE, STEEL STRUCTURAL MEMBERS AND STEEL MOUNTING PLATES.

(E9) DE-ENERGIZE, DISCONNECT AND REMOVE MOLE SECONDARY POWER DISTRIBUTION EQUIPMENT CONSISTING OF A 225A, 480/277V, 3PH., 4W. PANELBOARD, 60A, 480V, 3P SEWAGE LIFT STATION DISCONNECT SWITCH, 60A, 480V, 3P ENCLOSED LIGHTING CONTACTOR AND STRUCTURAL STEEL RACK. DE-ENERGIZE, DISCONNECT AND REMOVE 3-4/0 PH., 1-4/0 NEUT. AND 1-#2 GND FROM 3" PVC CONDUIT BETWEEN 150kVA, 480/277V, 3 PH., OIL FILLED PAD MOUNTED TRANSFORMER AND MOLE SECONDARY POWER DISTRIBUTION EQUIPMENT. DE-ENERGIZE AND DISCONNECT 150kVA, 480/277V, 3 PH., OIL FILLED PAD MOUNTED TRANSFORMER, SECURE AND PROTECT TRANSFORMER WHICH IS TO BE RE-ENERGIZED UNDER THE NEW ELECTRICAL WORK PORTION OF THIS PROJECT.

(E10) DE-ENERGIZE, DISCONNECT AND REMOVE EXISTING 15kVA, 480V 1PH. PRI., 120/240V 1PH. 3W. SEC. MINIPOWER ZONE COMBINATION TRANSFORMER/LOAD CENTER, FIBER GLASS HOUSING AND CONCRETE FOUNDATION. PROTECT HORIZONTAL PORTIONS OF UNDERGROUND CONDUITS FOR EXTENSTION UP INTO NEW LC/TELECOMM. OUTLET ASSEMBLY.

(E11) DE-ENERGIZE, DISCONNECT AND REMOVE 2-#6 PH. AND 1-#10 GND FROM 2" PVC CONDUIT. REMOVE FEEDER WIRES BACK TO MOLE SECONDARY POWER DISTRIBUTION PANELBOARD.

1

(E12) DISCONNECT AND REMOVE COMMUNICATIONS PEDESTAL CONSISTING OF A TWO (2) 30"H.x 30"W. x 8" D. NEMA TYPE 3R CABINETS, TWO (2) VERTICAL STRUCTURAL STEEL SUPPORT POSTS AND CONCRETE FOUNDATION. PROTECT HORIZONTAL PORTIONS OF UNDERGROUND CONDUIT FOR EXTENSION UP INTO NEW LC/TELECOMM. OUTLET ASSEMBLY.

(E13) DISCONNECT AND REMOVE COMMUNICATIONS CABLING FROM 4" PVC CONDUIT. DO NOT REMOVE TELEPHONE TRUNK LINE IF TELEPHONE SERVICE PROVIDER DETERMINES IT CAN BE REUSED. COORDINATE WORK WITH TELEPHONE SERVICE PROVIDER.

(E14) DE-ENERGIZE AND REMOVE UNIT SUBSTATION CONSISTING OF A 15kV MEDIUM VOLTAGE METAL ENCLOSED LOAD INTERRUPTER SWITCH, A 750kVA, 13.8kV DELTA PRI., 480V DELTA SEC., 3PH. OIL FILLED SUBSTATION STYLE TRANSFORMER; AND A 2,000A, 480V, 3PH. SWITCHBOARD CONTAINING SEVEN (7) 400A DRAWOUT CIRCUIT BREAKERS, METERING COMPARTMENT, BATTERY CHARGER SYSTEM COMPARTMENT AND APPURTENANCES. REMOVE CONCRETE PAD. PROTECT HORIZONTAL PORTIONS OF UNDERGROUND CONDUITS FOR EXTENSION UP INTO NEW CONCRETE PAD. DE-ENERGIZE, DISCONNECT AND REMOVE 300kVA, 208/120V, 3 PH., OIL FILLED PAD MOUNTED TRANSFORMER, AND DELIVER TO NAFKW ELECTRICAL DEPARTMENT MATERIAL STORAGE YARD ON BOCA CHICA.

(E15) DE-ENERGIZE, DISCONNECT AND REMOVE 40'-0" TALL GALVANIZED STEEL LIGHT POLE AND FLOOD LIGHT TYPE LUMINAIRES INSTALLED THEREON.

1

(E16) DE-ENERGIZE, DISCONNECT AND REMOVE 3-#8 PH., 1-#8 NEUT. AND 1-#6 GND FROM 2" CRGS CONDUIT. CONCRETE FOUNDATION AND CONDUIT IS TO REMAIN INTACT FOR REUSE UNDER THE NEW ELECTRICAL WORK PORTION OF THIS PROJECT. REMOVE LIGHTING CIRCUIT WIRES BACK TO MOLE SECONDARY POWER DISTRIBUTION LIGHTING CONTACTOR.

(E17) REMOVE RADIO REPORTING TYPE MANUAL FIRE ALARM PULL STATION POLE, CONCRETE FOUNDATION AND FOUR (4) CONCRETE FILLED PIPE BOLLARDS.

(E18) DE-ENERGIZE, DISCONNECT AND REMOVE 3-250kcmil MEDIUM VOLTAGE CABLES FROM 4" PVC CONDUIT.

(E19) DE-ENERGIZE, DISCONNECT AND REMOVE 3-600kcmil PH. AND 1-#1 GND FROM EACH OF 6-4" PVC CONDUITS. DE-ENERGIZE, DISCONNECT AND REMOVE SIX (6) SETS OF MULTIPLE #12 CONTROL WIRES FROM A 4" PVC CONDUIT.

1

(E20) DISCONNECT AND REMOVE COMMUNICATIONS CABLING FROM 2-2" PVC CONDUITS. DO NOT REMOVE TELEPHONE TRUNK LINE IF TELEPHONE SERVICE PROVIDER DETERMINES IT CAN BE REUSED. COORDINATE WORK WITH TELEPHONE SERVICE PROVIDER.

## ELECTRICAL DEMOLITION (CONTINUED)

(E21) DE-ENERGIZE, DISCONNECT AND REMOVE PIER POWER STATION CONSISTING OF A 500A, 480V, 3PH. RECEPTACLE, CONTROL PANEL AND HEAVY DUTY A GALVANIZED STEEL ENCLOSURE.

(E22) DE-ENERGIZE, DISCONNECT AND REMOVE 3-600kcmil PH. AND 1-#1 GND FROM 4" PVC CONDUITS. DE-ENERGIZE, DISCONNECT AND REMOVE MULTIPLE #12 CONTROL WIRES FROM A 2" PVC CONDUIT.

(E23) DE-ENERGIZE, DISCONNECT AND REMOVE 3-600kcmil PH. AND 1-#1 GND FROM EACH OF 4-4" PVC CONDUITS. DE-ENERGIZE, DISCONNECT AND REMOVE FOUR (4) SETS OF MULTIPLE #12 CONTROL WIRES FROM A 4" PVC CONDUIT.

(E24) DE-ENERGIZE, DISCONNECT AND REMOVE PIER POWER STATION CONSISTING OF TWO (2) 500A, 480V, 3PH. RECEPTACLES, TWO (2) CONTROL PANELS AND A HEAVY DUTY GALVANIZED STEEL ENCLOSURE.

(E25) DE-ENERGIZE, DISCONNECT AND REMOVE 3-600kcmil PH. AND 1-#1 GND FROM EACH OF 2-4" PVC CONDUITS. DE-ENERGIZE, DISCONNECT AND REMOVE TWO (2) SETS OF MULTIPLE #12 CONTROL WIRES FROM A 2" PVC CONDUIT.

(E26) DE-ENERGIZE, DISCONNECT AND REMOVE ALL CABLING/WIRING FROM MANHOLE. PREPARE CONDUITS FOR DEMOLITION OF MANHOLE, AND EXTENSION AND TERMINATION TO NEW MANHOLE TO BE CONSTRUCTED UNDER THE NEW WORK PORTION OF THIS PROJECT.

(E27) DE-ENERGIZE, DISCONNECT AND REMOVE TIME SWITCH FROM MANHOLE.

(E28) DE-ENERGIZE, DISCONNECT AND REMOVE 30'-0" TALL CONCRETE LIGHT POLE AND FLOOD LIGHT TYPE LUMINAIRE INSTALLED THEREON.

(E29) DE-ENERGIZE, DISCONNECT AND REMOVE 30'-0" TALL GALVANIZED STEEL LIGHT POLE AND FLOOD LIGHT TYPE LUMINAIRE INSTALLED THEREON.

(E30) DE-ENERGIZE, DISCONNECT AND REMOVE 2-#10 PH. AND 1-#10 GND FROM 1 1/4" PVC CONDUIT. REMOVE LIGHTING CIRCUIT WIRES BACK TO TIME SWITCH.

## STRUCTURAL DEMOLITION

(S1) REMOVE ALL ARCH FENDERS ALONG OUTER MOLE BERTH, NORTH AND CENTRAL MOLE BERTH AND PIER 8. RETAIN FASTENERS. LEAVE BOLTS IN PLACE.

(S2) REMOVE NORTH END OF OUTER MOLE BEYOND LOCATION OF NEW BULKHEAD WALL FROM EXISTING GROUND SURFACE TO ELEVATION -33.7 MSL, PLUS 2'-0" OVERDREDGE. REMOVAL TO INCLUDE EXISTING STRUCTURES, BOLLARD AND 5' ø DRILLED SHAFT BOLLARD FOUNDATION, DEBRIS, PAVEMENT, UTILITIES, EARTH AND ROCK.

(S3) REMOVE PORTIONS OF EXISTING BULKHEAD WALLS AS INDICATED TO ALLOW CONSTRUCTION OF NEW BULKHEAD WALL.

(S4) REMOVE SUBMERGED REMAINS OF FOUR TIMBER (19) PILE DOLPHIN CLUSTERS.

(S5) REMOVE SOUTH MOLE AND PORTIONS OF THE CENTRAL MOLE CONCRETE SHEET PILE CAP AND ATTACHMENTS TO WALL AS INDICATED.

3

(S6) REMOVE BOLLARD AND PILE CAP TO ACCOMODATE NEW BOLLARD AND FOUNDATION. PILING TO REMAIN IN PLACE DUE TO EXISTING ELECTRICAL DUCT BANK.

(S7) REMOVE AND DISPOSE OF ALL LOW DOUBLE BITTS AND CLEATS FROM OUTER MOLE BERTH.

1

(S8) REMOVE COMPLETELY 2 SUBMERGED 14 IN. CONCRETE PILING STUBS – DO NOT CUT PILING.

(S9) REMOVE COMPLETELY 1 SUBMERGED 14 IN. CONCRETE PILING STUB – DO NOT CUT PILE.

(S10) REMOVE CONCRETE SLAB 38'X4'X5" AND PAVEMENT – PROTECT BUILDING FOUNDATION DURING WALL REPAIRS.

1

(S11) REMOVE 12" STEEL CRANE RAIL 12' LONG 3" FROM BUILDING FACE. REMOVE 6" STEEL COLUMNS 8' LONG ATTACHED TO SEAWALL. REMOVE 6" STEEL BEAM 8' LONG.

(S12) REMOVE 24" CLEAT ATTACHED TO SEAWALL.

(S13) REMOVE 24" CLEAT AND CONCRETE SUPPORT ADJOINING SEAWALL.

(S14) REMOVE REMAINS OF 2' WOOD WALKWAY ATTACHED TO SEAWALL INCLUDING 12"X12" TIMBER BEAM, 2' WOOD WALKWAY, LADDERS AND MISC. ATTACHMENTS.

(S15) REMOVE 20" DIAMETER TREE.

(S16) REMOVE WOOD DECK.

(S17) REMOVE ABANDONED 2" PVC CONDUIT AND WIRING.

(S18) REMOVE END OF FENCE TEMPORARILY TO CONSTRUCT WALL REPAIR AND RESTORE AFTER COMPLETION OF WALL REPAIR.

1

(S19) REMOVE ABANDONED CONCRETE 2'X3.5' UTILITY STRUCTURE.

(S20) REMOVE BY SAW CUTTING IN NEAT STRAIGHT LINES CONCRETE SLAB AS NECESSARY TO CONSTRUCT NEW CLEATS AND FOUNDATIONS SHOWN ON SHEET S-12. ASSUME EXISTING SLAB IS 8" THICK.

REDUCED DRAWING – VERIFY SCALE REPRESENTATIONS

N:\NAVY\KEYWEST\TRUMAN HARBOR\AS-BUILT\C-15.DWG 02/15/05 16:23

| DRAWING REVISIONS | | | | | |
|---|---|---|---|---|---|
| Rev. | Description | Prep By | Date | Apprvd. | |
| 1 | REVISED PER AMENDMENT 0003 | FKW | 04/04/03 | CRS | |
| 2 | REVISED PER AMENDMENT 0005 | FKW | 04/11/03 | CRS | |
| 3 | CORRECTED TO AS-BUILT | FKW | 03/01/05 | CRS | |

URS Group, Inc.
7650 West Courtney Campbell Causeway
Tampa, FL 33607 NO. 00000002

DSGN WALKER DR ZICHLIN CHK WALKER
SUPV WALKER CH ENGR WALKER
SUBMITTED BY: DATE
TECHNICAL BRANCH
FPE

KEY WEST, FLORIDA
NAVAL AIR FACILITY
TRUMAN HARBOR REPAIRS
DEMOLITION NOTES
APPROVED DATE
FED. FOR COMMANDER, NAVFAC

Naval Facilities Engineering Command
Southern Division
Charleston, South Carolina

RECORD DRAWING

RECORD DRAWING DATE
1 MARCH 2005
CODE I.D. NO. 80091
DRAWING SIZE: D
SPEC.NO. 06-03-0154
CONSTRN. CONTR. NO.
N62467-03-C-0154
NAVFAC DRAWING NO.
5429441
SHEET 20 OF

C-15

## GENERAL NOTES:

1. THE GENERAL AND KEY NOTES ON THIS DRAWING APPLY TO DRAWINGS E-10 THROUGH E-13. SEE DRAWING C-15 FOR NOTES GOVERNING ELECTRICAL DEMOLITION WORK.

2. EXACT LOCATIONS OF UTILITY POLES PROVIDED BY ELECTRICAL POWER SERVICE PROVIDER, SHALL BE DETERMINED BY THE ELECTRICAL POWER SERVICE PROVIDER BASED SYSTEMS ENGINEERING PERFORMED BY THE UTILITY SERVICE PROVIDER.

3. PREPARE EXISTING AND NEW DUCTS/CONDUITS AND MANHOLES SPECIFIED TO RECEIVE NEW PRIMARY CABLES. DE-WATER AND CLEAN EXISTING MANHOLES IDENTIFIED TO RECEIVE NEW PRIMARY CABLES, OF DIRT, DEBRIS, AND ABANDONED CABLES/WIRES. CLEAN EXISTING DUCTS/CONDUITS IDENTIFIED TO RECEIVE NEW PRIMARY CABLES, BY PULLING A MANDREL THROUGH EACH DUCT/CONDUIT IN EACH DIRECTION, AND THEREAFTER PULLING A STIFF BRISTLE BRUSH WITH SWAB THROUGH THE DUCT/CONDUIT UNTIL DUCT/CONDUIT IS CLEAR OF EARTH, SAND, AND GRAVEL. PROVIDE FOR DE-WATERING OF MANHOLES AS REQUIRED TO COMPLETE INSTALLATION OF NEW PRIMARY CABLES.

4. PREPARE EXISTING AND NEW DUCTS/CONDUITS AND MANHOLES SPECIFIED TO RECEIVE NEW SECONDARY WIRES. DE-WATER AND CLEAN EXISTING MANHOLES IDENTIFIED TO RECEIVE NEW SECONDARY WIRES, OF DIRT, DEBRIS, AND ABANDONED CABLES/WIRES. CLEAN EXISTING DUCTS/CONDUITS IDENTIFIED TO RECEIVE NEW SECONDARY WIRES, BY PULLING A MANDREL THROUGH EACH DUCT/CONDUIT IN EACH DIRECTION, AND THEREAFTER PULLING A STIFF BRISTLE BRUSH WITH SWAB THROUGH THE DUCT/CONDUIT UNTIL DUCT/CONDUIT IS CLEAR OF EARTH, SAND, AND GRAVEL. PROVIDE FOR DE-WATERING OF MANHOLES AS REQUIRED TO COMPLETE INSTALLATION OF NEW SECONDARY WIRES.

5. PREPARE EXISTING AND NEW DUCTS/CONDUITS AND MANHOLES FOR USE BY TELEPHONE AND CATV SERVICE PROVIDERS. DE-WATER AND CLEAN EXISTING COMMUNICATIONS MANHOLES IDENTIFIED FOR TELEPHONE AND CATV SERVICE PROVIDER USE, OF DIRT, DEBRIS, AND ABANDONED CABLES. EXISTING DUCTS/CONDUITS AND MANHOLES MAY CONTAIN ACTIVE TELEPHONE CABLES. COORDINATE CLEANING ACTIVITIES WITH TELEPHONE SERVICE PROVIDER SO THAT ACTIVE TELEPHONE CABLES ARE IDENTIFIED, PROTECTED, REMAIN UNDAMAGED, AND REMAIN IN SERVICE. CLEAN EXISTING DUCTS/CONDUITS IDENTIFIED FOR TELEPHONE AND CATV SERVICE PROVIDER USE BY PULLING A MANDREL THROUGH EACH DUCT/CONDUIT IN EACH DIRECTION, AND THEREAFTER PULLING A STIFF BRISTLE BRUSH WITH SWAB THROUGH THE DUCT/CONDUIT UNTIL DUCT IS CLEAR OF EARTH, SAND, AND GRAVEL. PROVIDE FOR DE-WATERING OF MANHOLES AS REQUIRED FOR TELEPHONE AND CATV SERVICE PROVIDERS TO COMPLETE THEIR WORK INSIDE THE MANHOLE. PROVIDE PULL ROPES FOR TELEPHONE AND CATV PROVIDER USE, IN EACH DUCT/CONDUIT IDENTIFIED FOR TELEPHONE AND CATV SERVICE PROVIDER USE. WHERE CABLE ROUTING HAS BEEN LEFT TO THE DISCRETION OF THE TELEPHONE AND CATV SERVICE PROVIDERS, COORDINATE FINAL CABLE ROUTING IN THE FIELD WITH THE TELEPHONE AND CATV SERVICE PROVIDERS.

## KEY NOTES:

(1) UTILITY EASEMENT SHOWN MAY BE USED BY TELEPHONE AND CATV SERVICE PROVIDERS TO BRING TELEPHONE AND CATV SERVICES TO SITE.

(2) EXISTING UNDERGROUND UTILITY DUCT BANK CONTAINING COMMUNICATIONS CONDUITS. UTILITY SERVICE PROVIDERS MAY, AT THEIR OPTION AND RISK, USE THESE CONDUITS TO BRING TELEPHONE AND CATV SERVICES TO THE SITE.

(3) PROPOSED OVERHEAD PRIMARY ELECTRICAL POWER DISTRIBUTION TO BE PROVIDED BY ELECTRICAL POWER UTILITY SERVICE PROVIDER.

(4) PROPOSED LOCATION FOR UTILITY POLE WITH GUYS AS REQUIRED TO BE PROVIDED BY ELECTRICAL POWER UTILITY SERVICE PROVIDER.

(5) PROPOSED LOCATION FOR UTILITY POLE WITH PRIMARY METERING, TO BE PROVIDED BY ELECTRICAL POWER UTILITY SERVICE PROVIDER.

(6) PROPOSED LOCATION FOR UTILITY POLES WITH SERVICE DROPS, TO BE PROVIDED BY ELECTRICAL POWER UTILITY SERVICE PROVIDER.

(7) PROVIDE DUCT BANK, ONE ACTIVE AND ONE SPARE CONDUIT, BETWEEN UTILTY POLE AND PRIMARY MANHOLE FOR PRIMARY SWITCH "A" SERVICE DROP. PROVIDE PRIMARY SERVICE CABLES IN ACTIVE CONDUIT. STUB ACTIVE CONDUIT UP POLE TO HEIGHT SPECIFIED BO ELECTRIC POWER SERVICE PROVIDER. STUB SPARE CONDUIT UP 6" ABOVE FINAL GRADE, ADJACENT TO UTILITY POLE AND CAP FOR FUTURE USE.

(8) PROVIDE DUCT BANK, ONE ACTIVE AND ONE SPARE CONDUIT, BETWEEN UTILTY POLE AND PRIMARY MANHOLE FOR PRIMARY SWITCH "B" SERVICE DROP. PROVIDE PRIMARY SERVICE CABLES IN ACTIVE CONDUIT. STUB ACTIVE CONDUIT UP POLE TO HEIGHT SPECIFIED BO ELECTRIC POWER SERVICE PROVIDER. STUB SPARE CONDUIT UP 6" ABOVE FINAL GRADE, ADJACENT TO UTILITY POLE AND CAP FOR FUTURE USE.

(9A) PROVIDE PRIMARY SWITCHES AS DETAILED.

(9B) PROVIDE SUBSTATION AS DETAILED.

(10) PROVIDE 8'-0" LONG BY 6'-0" WIDE BY 6'-0" HIGH (INSIDE DIMENSIONS) PRECAST CONCRETE MANHOLE WITH 42" CLEAR OPENING DIAMETER HS-20 TRAFFIC LOAD RATED DUCTILE IRON LID/LID FRAME. 1

(11) PROVIDE 5'-0" LONG BY 5'-0" WIDE BY 6'-0" HIGH (INSIDE DIMENSIONS) PRECAST CONCRETE MANHOLE WITH 42" CLEAR OPENING DIAMETER HS-20 TRAFFIC LOAD RATED DUCTILE IRON LID/LID FRAME. 1

(12) PROVIDE DUCT BANK AS DETAILED. PROVIDE CABLES AND WIRES IN THESE CONDUITS AS SPECIFIED.

(13) PROVIDE TWO 4" SCH. 40 PVC CONDUITS BETWEEN UTILTY POLE AND COMMUNICATIONS MANHOLE FOR POSSIBLE USE BY TELEPHONE AND CATV SERVICE PROVIDERS. CONDUITS SHALL BE DIRECT BURIED BELOW GRADE WITH MINIMUM 36" EARTH COVER. STUB CONDUITS UP 6" ABOVE FINAL GRADE ADJACENT TO UTILITY POLE AND CAP.

(14) EXISTING UTILITY DUCT BANK CONTAINING VARIOUS COMBINATIONS OF SECONDARY ELECTRICAL POWER AND COMMUNICATIONS CONDUITS. TELEPHONE AND CATV SERVICE PROVIDERS MAY USE THESE CONDUITS TO BRING TELEPHONE AND CATV SERVICES TO PIER COMMUNICATION OUTLET ASSEMBLIES.

(15) EXISTING UTILITY DUCT BANK CONTAINING VARIOUS COMBINATIONS OF PRIMARY ELECTRICAL POWER, SECONDARY ELECTRICAL POWER AND COMMUNICATIONS CONDUITS. PROVIDE PRIMARY AND SECONDARY ELECTRICAL POWER DISTRIBUTION CABLES AND WIRES IN THESE CONDUITS AS SPECIFIED. TELEPHONE AND CATV SERVICE PROVIDERS SHALL USE THESE CONDUITS TO BRING TELEPHONE AND CATV SERVICES TO PIER COMMUNICATIONS OUTLET ASSEMBLIES.

(16) EXISTING DUCT BANK CONTAINING TWO 4" PVC CONDUITS, ONE ACTIVE AND ONE SPARE. REWORK EXISTING CONDUITS UP INTO NEW PRIMARY SWITCH AT NEW SUBSTATION. PROVIDE PRIMARY CABLES IN ACTIVE CONDUIT AS SPECIFIED.

1 (17) PROVIDE NEW CONCRETE CAP, DIMENSIONS TO MATCH OUTSIDE DIMENSIONS OF EXISTING MANHOLE, AND 42" CLEAR OPENING DIAMETER HS-20 TRAFFIC LOAD RATED DUCTILE IRON LID/LID FRAME ON EXISTING MANHOLE.

(18) <NOT USED>

(19) PROVIDE NEW PIER POWER OUTLET IGLOO AS DETAILED TO REPLACE EXISTING IN EXISTING LOCATION.

(20) EXISTING DUCT BANK CONTAINING EIGHT 4" PVC CONDUITS. REWORK EXISTING CONDUITS UP INTO RECESS BELOW NEW SUBSTATION SECONDARY DISTRIBUTION SECTION AND UP INTO NEW PIER POWER OUTLET IGLOO. PROVIDE SECONDARY WIRES IN EACH CONDUIT AS SPECIFIED.

(21) PROVIDE NEW PIER POWER OUTLET IGLOO AS DETAILED IN NEW LOCATION.

(22) <NOT USED>

1 (23) <NOT USED>

(24) EXISTING 4" PVC COATED RGS CONDUIT UNDERGROUND. REWORK EXISTING CONDUIT UP INTO NEW LOAD CENTER. EXTEND IN KIND WITH NEW AS REQUIRED. PROVIDE SECONDARY WIRES IN THIS CONDUIT TO SERVE LOAD CENTER AS SPECIFIED.

(25) PROVIDE NEW PIER LOAD CENTER/TELECOMMUNICATIONS OUTLET ASSEMBLY AS DETAILED TO REPLACE EXISTING.

## KEY NOTES CONT. . .

1 (26) EXISTING 4" PVC COATED RGS CONDUIT UNDERGROUND. REWORK EXISTING CONDUIT UP INTO NEW PIER COMMUNICATIONS OUTLET ASSEMBLY. EXTEND EXISTING IN KIND WITH NEW AS REQUIRED. PROVIDE THREE 1¼" OUTDOOR RATED ORANGE INNERDUCT IN THIS CONDUIT, ONE FOR TELEPHONE SERVICE PROVIDER CABLE, ONE FOR CATV SERVICE CABLE, AND ONE FOR BASE COMMUNICATIONS CABLE. EXTEND INNERDUCT UP INTO PIER LC/ TELECOMMUNICATIONS OUTLET ASSEMBLY TO THE RESPECTIVE SERVICE TERMINATION COMPARTMENT. INNERDUCT SHALL BE CONTINUOUS FROM END TO END WITHOUT SPLICE.

(27) <NOT USED>

(28) PROVIDE NEW LIGHT POLE ON EXISTING CONCRETE FOUNDATION AS SPECIFIED. FIELD VERIFY BOLT PATTERN BEFORE PLACING ORDER FOR LIGHT POLE.

(29) EXISTING 2" PVC COATED RGS CONDUIT UNDERGROUND. PROVIDE LIGHTING CIRCUIT WIRES IN THIS CONDUIT AS SPECIFIED.

(30) <NOT USED>

(31) PROVIDE CATV PEDESTAL AS DETAILED. CATV PEDESTAL SHALL INCLUDE AN ENCLOSURE WITH BACKPANEL, MOUNTING RACK, FOUNDATIONS AND PROTECTIVE PIPE BOLLARDS. CATV SERVICE PROVIDER SHALL USE THIS PEDESTAL TO HOUSE AN AMPLIFIER.

1 (32) PROVIDE TWO 3" PVC COATED RGS CONDUIT UNDERGROUND BETWEEN EXISTING COMMUNICATIONS MANHOLE AND CATV PEDESTAL. CATV SERVICE PROVIDER SHALL USE THIS CONDUIT TO ROUTE CATV CABLES TO/FROM AMPLIFIER.

(33) PROVIDE RADIO REPORTING TYPE FIRE ALARM MANUAL PULL STATION AS DETAILED.

(34) PROVIDE MOLE PIER POWER CENTER AS DETAILED.

(35) PROVIDE PVC COATED RGS CONDUIT UNDERGROUND BETWEEN MOLE PIER POWER CENTER PANEL AND SECONDARY MANHOLE AS FOLLOWS:

2½" FOR SECONDARY WIRES FROM TRANSFORMER T43 AS SPECIFIED.
2" FOR SECONDARY WIRES TO PIER LOAD CENTERS 1A THROUGH 1D AS SPECIFIED.
2" FOR SECONDARY WIRES TO PIER LOAD CENTERS 2A THROUGH 2D AS SPECIFIED.
2" FOR SECONDARY WIRES TO PIER LOAD CENTERS 3A THROUGH 3D AS SPECIFIED.
2" FOR SPARE.

(36) PROVIDE 1½" PVC COATED RGS CONDUIT UNDERGROUND BETWEEN MOLE PIER POWER CENTER LIGHTING CONTACTOR AND SECONDARY MANHOLE FOR LIGHTING CIRCUIT WIRES AS SPECIFIED.

(37) PROVIDE 1½" PVC COATED RGS CONDUIT UNDERGROUND BETWEEN MOLE PIER POWER CENTER PANEL AND MOLE LIFT STATION CONTROL PANEL FOR SECONDARY CIRCUIT WIRES.

1 (38) PROVIDE 1" PVC COATED RGS CONDUIT UNDERGROUND BETWEEN MOLE PIER POWER CENTER PANEL AND MOLE OWS CONTROL PANEL FOR UNSPECIFIED FUTURE USE. CAP END OF CONDUIT STUBBED UP ABOVE GRADE AT OWS CONTROL PANEL END.

(39) PROVIDE KWH METER, INCLUDING METER SOCKET, BUSHING MOUNTED CTs, STAINLESS STEEL CT MOUNTING BRACKETS, WIRING AND APPURTENANCES, ON EXISTING TRANSFORMER T43.

2 4 (40) PROVIDE 1" PVC CONDUIT DIRECT BURIED UNDERGROUND FOR SEWER METER POWER. PROVIDE (1) #12 PH., (1) #12 NEUT. AND (1) #12 GND IN CONDUIT FROM SEWER METER BACK TO PANEL "P8PCP".

(41) PROVIDE 17.25" LONG BY 10.5" WIDE BY 12" HIGH (INSIDE DIMENSIONS) PRECAST CONCRETE HANDHOLE WITH H-10 TRAFFIC LOAD RATED CAST IRON LID. LID LEGEND SHALL READ "ELECTRIC".

(42) PROVIDE 3" RGS CONDUIT SLEEVE THROUGH WHICH TO INSTALL SEWER METER BRANCH CIRCUIT CONDUIT. INSTALL SLEEVE VIA JACKING METHOD. OPEN SAWCUTTING OR OTHER CONDUIT INSTALLATION METHODS THAT DAMAGE EXISTING PAVEMENT ARE NOT ACCEPTABLE. EXTEND SLEEVE A MINIMUM OF 48" BEYOND EDGE OF PAVEMENT ON EACH SIDE.

(43) MAKE BRANCH CIRCUIT CONNECTION TO WATER METER.

## 3 ADENDUM 0005

1. ADD THE FOLLOWING AT THE END OF KEY NOTE 14: "REMOVE ALL ABANDONED SECONDARY POWER DISTRIBUTION WIRES AND COMMUNICATIONS CABLES FROM CONDUITS CONTAINED WITHIN THIS DUCT BANK. THE CONTRACTOR IS CAUTIONED THAT THERE ARE ACTIVE TELEPHONE CABLES PRESENT THAT THE TELEPHONE SERVICE PROVIDER MAY WISH TO KEEP IN SERVICE. COORDINATE THIS WORK WITH THE TELEPHONE SERVICE PROVIDER."



URS Group, Inc.
7650 West Courtney Campbell Causeway
Tampa, FL 33607
NO. 00000002

DSGN KERLY | DR KERLY | CHK GIANG
SUPV WALKER | CH ENGR WALKER | DATE
SUBMITTED BY : | TECHNICAL BRANCH

DRAWING REVISIONS

| Rev. | Description | Prep By | Date | Apprvd. |
|---|---|---|---|---|
| 1 | REVISED PER AMENDMENT 0003 | FKW | 04/04/03 | CRS |
| 2 | REVISED PER AMENDMENT 0009 | FKW | 03/19/04 | CRS |
| 3 | REVISED PER AMENDMENT 0005 | FKW | 04/11/03 | CRS |
| 4 | CORRECTED TO AS-BUILT | FKW | 03/01/05 | CRS |

FPE

KEY WEST, FLORIDA

NAVAL AIR FACILITY

# TRUMAN HARBOR REPAIRS

KEY NOTES FOR DRAWINGS E-10 THROUGH E-13

DATE | APPROVED

EFD, FOR COMMANDER, NAVFAC

Naval Facilities Engineering Command
Southern Division
Charleston, South Carolina

RECORD DRAWING

RECORD DRAWING DATE
1 MARCH 2005
CODE I.D. NO. 80091
DRAWING SIZE: D
SPEC.NO. 06-03-0154
CONSTRN. CONTR. NO.
N62467-03-C-0154
NAVFAC DRAWING NO.
5429469
SHEET 48 OF

E-9

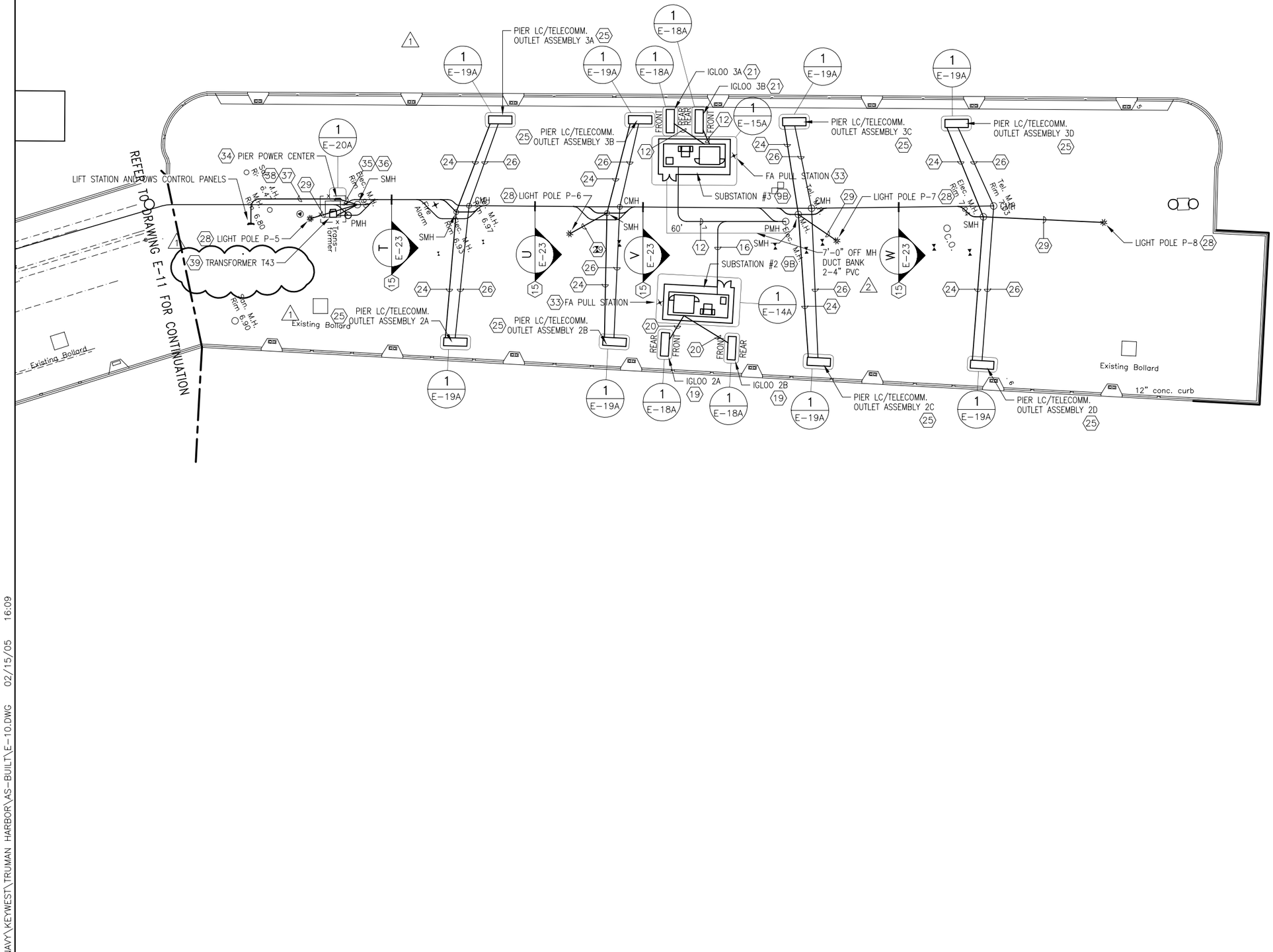


REDUCED DRAWING – VERIFY SCALE REPRESENTATIONS

GRAPHIC SCALE
30' 0 30'

REFER TO DRAWING E-9 FOR GENERAL AND KEY NOTES APPLICABLE TO THIS DRAWING

N:\NAVY\KEYWEST\TRUMAN HARBOR\AS-BUILT\E-10.DWG 02/15/05 16:09

**URS Group, Inc.**
7650 West Courtney Campbell Causeway
Tampa, FL 33607 NO. 00000002

| | | | | |
|---|---|---|---|---|
| DSGN WALKER | DR ZICHLIN | CHK WALKER | | |
| SUPV WALKER | CH ENGR WALKER | | | |
| SUBMITTED BY : | | | | DATE |
| TECHNICAL BRANCH | | | | |
| FPE | | | | |

DRAWING REVISIONS

| Rev. | Description | Prep By | Date | Apprvd. |
|---|---|---|---|---|
| 1 | REVISED PER AMENDMENT 0003 | FKW | 04/04/03 | CRS |
| 2 | CORRECTED TO AS-BUILT | FKW | 03/01/05 | CRS |

KEY WEST, FLORIDA

# TRUMAN HARBOR REPAIRS

ELECTRICAL PLAN NORTH MOLE

DATE EFD FOR COMMANDER, NAVFAC

NAVAL AIR FACILITY

APPROVED

Naval Facilities Engineering Command
Southern Division
Charleston, South Carolina

RECORD DRAWING

| | |
|---|---|
| RECORD DRAWING DATE | 1 MARCH 2005 |
| CODE I.D. NO. | 80091 |
| DRAWING SIZE: | D |
| SPEC.NO. | 06-03-0154 |
| CONSTRN. CONTR. NO. | N62467-03-C-0154 |
| NAVFAC DRAWING NO. | 5429470 |
| SHEET | 49 OF |

E-10

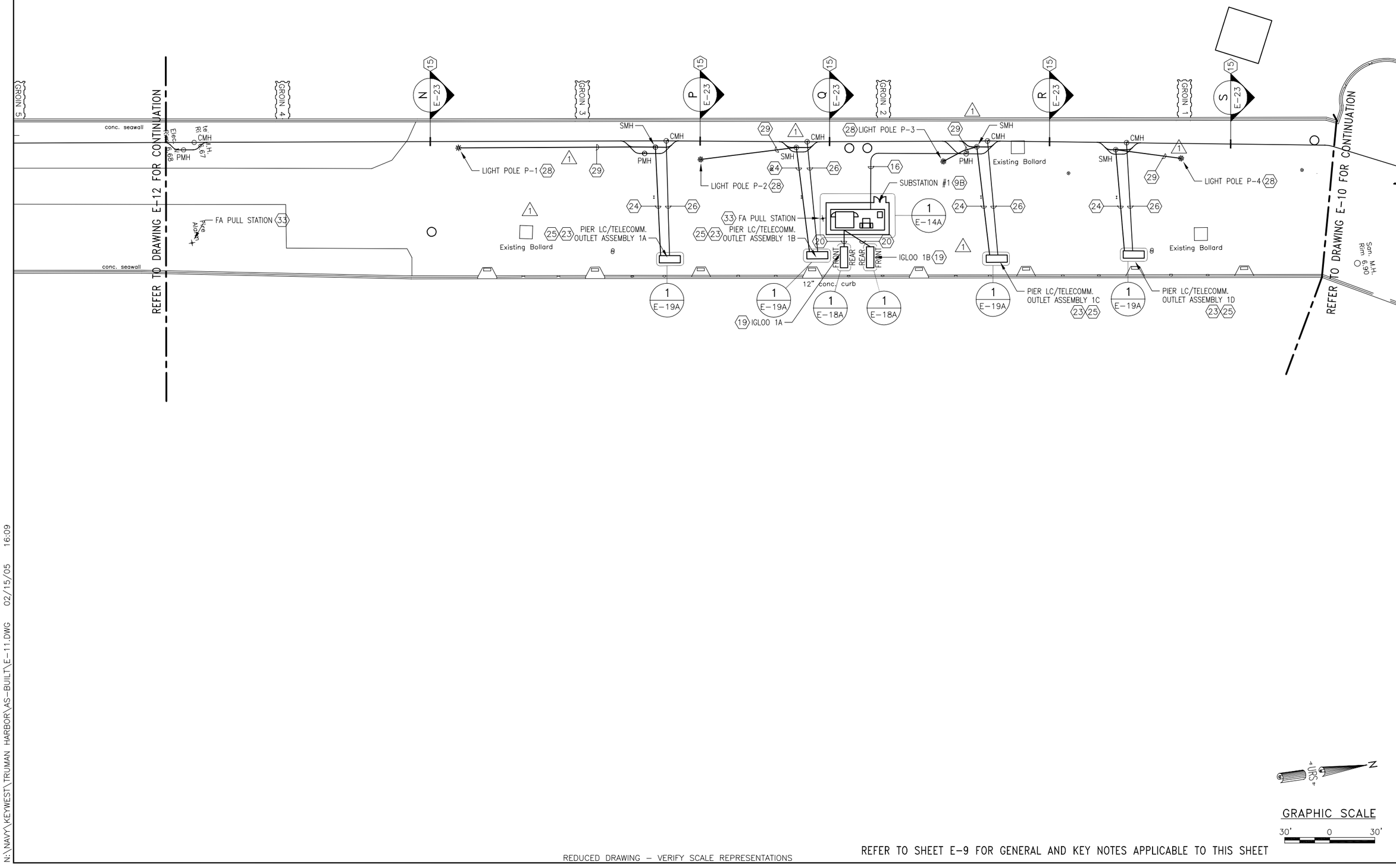


GRAPHIC SCALE
30' 0 30'

REDUCED DRAWING – VERIFY SCALE REPRESENTATIONS

REFER TO SHEET E-9 FOR GENERAL AND KEY NOTES APPLICABLE TO THIS SHEET

N:\NAVY\KEYWEST\TRUMAN HARBOR\AS-BUILT\E-11.DWG 02/15/05 16:09

| URS Group, Inc. | | | |
|---|---|---|---|
| 7650 West Courtney Campbell Causeway<br>Tampa, FL 33607 | | | |
| NO. 00000002 | | | |
| DSGN WALKER | DR ZICHLIN | CHK WALKER | |
| SUPV WALKER | CH ENGR WALKER | | |
| SUBMITTED BY : | | | DATE |
| TECHNICAL BRANCH | | | |
| FPE | | | |

DRAWING REVISIONS

| Rev. | Description | Prep By | Date | Apprvd. |
|---|---|---|---|---|
| 1 | REVISED PER AMENDMENT 0003 | FKW | 04/04/03 | CRS |
| | AS-BUILT, NO CORRECTIONS | FKW | 03/01/05 | CRS |

KEY WEST, FLORIDA

# TRUMAN HARBOR REPAIRS

ELECTRICAL PLAN CENTRAL MOLE

DATE EFD FOR COMMANDER, NAVFAC

NAVAL AIR FACILITY

APPROVED

Naval Facilities Engineering Command
Southern Division
Charleston, South Carolina

RECORD DRAWING

| |
|---|
| RECORD DRAWING DATE<br>1 MARCH 2005 |
| CODE I.D. NO. 80091 |
| DRAWING SIZE: D |
| SPEC.NO. 06-03-0154 |
| CONSTRN. CONTR. NO.<br>N62467-03-C-0154 |
| NAVFAC DRAWING NO.<br>5429471 |
| SHEET 50 OF |
| E-11 |