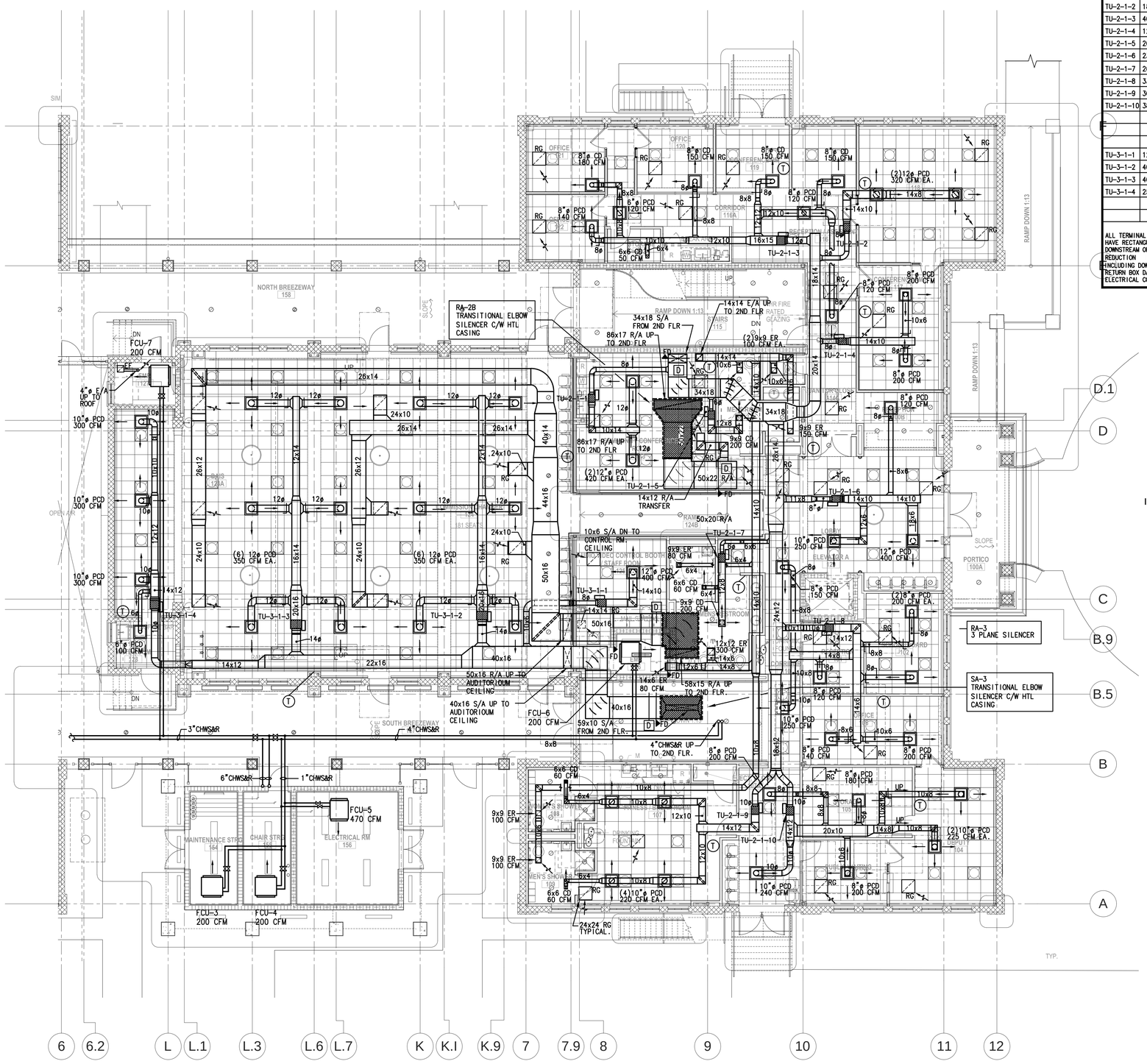

1 1st FLOOR MECHANICAL PLAN- WING A

M2.1A 1/8" = 1'-0"

VAV TERMINAL UNIT SCHEDULE

UNIT BOX#	CFM MIN.	CFM MAX.	CFM HTG	INLET SIZE	MANUFACTURER & MODEL NO.	AREA SERVED – ROOM #	HEATER	ELECT.
TU-2-1-1	180	840	–	8"ø	ETI-SDR	CONFERENCE 113	–	–
TU-2-1-2	180	640	180	8"ø	ETI-SDR	MAYOR 118	1 KW	120V
TU-2-1-3	400	1180	400	12"ø	ETI-SDR	OFFICE 121,123,120,119. RECEP 116	2 KW	120V
TU-2-1-4	120	400	120	8"ø	ETI-SDR	CONFERENCE 117	0.5 KW	120V
TU-2-1-5	200	200	–	6"ø	ETI-SDR	MENS REST. 112	–	–
TU-2-1-6	230	770	230	8"ø	ETI-SDR	LOBBY 100, RECEP 100B	1.5 KW	120V
TU-2-1-7	260	260	–	6"ø	ETI-SDR	WOMEN REST 111	–	–
TU-2-1-8	330	1260	330	10"ø	ETI-SDR	OFFICES 101, 102, 106	1.5 KW	120V
TU-2-1-9	300	1000	–	10"ø	ETI-SDR	FITNESS RM 107	–	–
TU-2-1-10	380	1220	380	10"ø	ETI-SDR	OFFICES 105, 104, 103	2 KW	120V
TU-3-1-1	120	400	–	8"ø	ETI-SDR	VIDEO CONTROL RM 125		
TU-3-1-2	400	2100	400	14"ø	ETI-SDR	COMMISSION CHAMBERS 124	2 KW	120V
TU-3-1-3	400	2100	400	14"ø	ETI-SDR	COMMISSION CHAMBERS 124	2 KW	120V
TU-3-1-4	250	1000	250	10"ø	ETI-SDR	COMMISSION CHAMBERS 124	1.5 KW	120V

ALL TERMINAL UNITS TO BE PRESSURE INDEPENDENT. NORMALLY OPEN, ELECTRICALLY ACTUATED ALL TERMINALS TO HAVE RECTANGULAR OUTLETS FOR CONNECTION TO SHEET METAL LOW VELOCITY DUCTWORK WITH SPLIT DRIVE JOINT DOWNSTREAM OF TERMINALS. UNITS SELECTED AND INLETS SIZED AS REQUIRED FOR STATIC REGAIN DUCT SYSTEMS. NO REDUCTION IN INLET SIZES WILL BE ACCEPTABLE. UNIT PRESSURE REQUIRED SHALL NOT EXCEED 0.25"W.G. (NOT INCLUDING DOWNSTREAM DUCT AND DIFFUSER PRESSURE REQUIREMENT). UPON LOSS OF POWER, BOX ACTUATORS SHALL RETURN BOX DAMPERS TO FULL-OPEN POSITION. PROVIDE VAV TERMINAL UNITS WITH DOUBLE WALL CONSTRUCTION, ELECTRICAL CONTROLS ENCLOSURE WITH TRANSFORMER.

NOTES:

1. ALL OFFICES OR ROOMS WITH PARTITION WALLS TO THE UNDERSIDE OF STRUCTURE SHALL BE PROVIDED WITH FOUR SQUARE FEET OPENING IN FRAMING WALL TO COMMON AREA ABOVE CEILING. NO COMBUSTIBLE MATERIALS ALLOWED IN R/A PLENUM
2. RETRUN AIR IS THROUGH CEILING SPACE, ADEQUATE OPENINGS AND CLEARANCE MUST BE PROVIDED ABOVE CEILING TO ALLOW FOR THE RETURN AIR TO OPERATE PROPERLY.
3. THE GENERAL CONTRACTOR IS REQUIRED TO COORDINATE THE INSTALLATION OF ALL BUILDING SERVICES AND UTILITIES BEING INSTALLED BY THE VARIOUS TRADES. PARTICULAR ATTENTION IS CALLED TO THE INSTALLATION OF MEP AND FIRE SPRINKLER SYSTEMS ABOVE CEILING. THE GLYNN ARCHER SCHOOL IS A SIGNIFICANT LOCAL HISTORIC RESOURCE AND RESTORATION OF THE HISTORIC CHARACTERISTICS OF THE EXTERIOR ENVELOPE HAS BEEN GIVEN A HIGH PRIORITY. THE CEILING HEIGHTS HAVE BEEN DESIGNED TO RESPECT AND RETAIN THE HISTORIC WINDOW HEIGHTS. THE A/E DESIGN TEAM HAS ENDEAVORED TO RESOLVE THE MAJOR ISSUES. HOWEVER,, THE CONTRACTOR SHALL PLAN ALL ACTIVITIES TO ENSURE A MINIMUM OF INTERFERENCE BETWEEN THE TRADES.

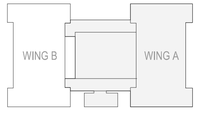

KEY PLAN WING A
1" = 80'-0"

REVISIONS:

KEY WEST CITY HALL AT GLYNN ARCHER

1300 WHITE STREET KEY WEST, FLORIDA
CITY OF KEY WEST

EDWIN O. CERNA LICENSE No 69808 STATE OF FLORIDA PROFESSIONAL ENGINEER

EDWIN O. CERNA, P.E. (MECHANICAL)
FL REG. #0069808

M.E.P.FP. ENGINEER:

HNGS ENGINEERS

HUFSEY, NICOLAIDES, GARCIA , SUAREZ CONSULTING ENGINEERS
4800 S.W. 74th Court Miami, Florida 33155
(305) 270-9935 Fax (305) 666-5891
HNGS # 13-0016
ENRIQUE J. SUAREZ, P.E. (MECHANICAL) FL REG.#0015794
CARLOS GARCIA, P.E. (ELECTRICAL) FL REG.#0014304

410 Angela Street
Key West, Florida 33040
Telephone (305) 296-1347
Facsimilie (305) 296-2727
Florida License AAC002022

Bender & Associates ARCHITECTS p.a.

Project N º 1305

1ST FLOOR MECHANICAL PLAN - WNG A

Date: 8/8/14

PERMIT SET

M2.1A

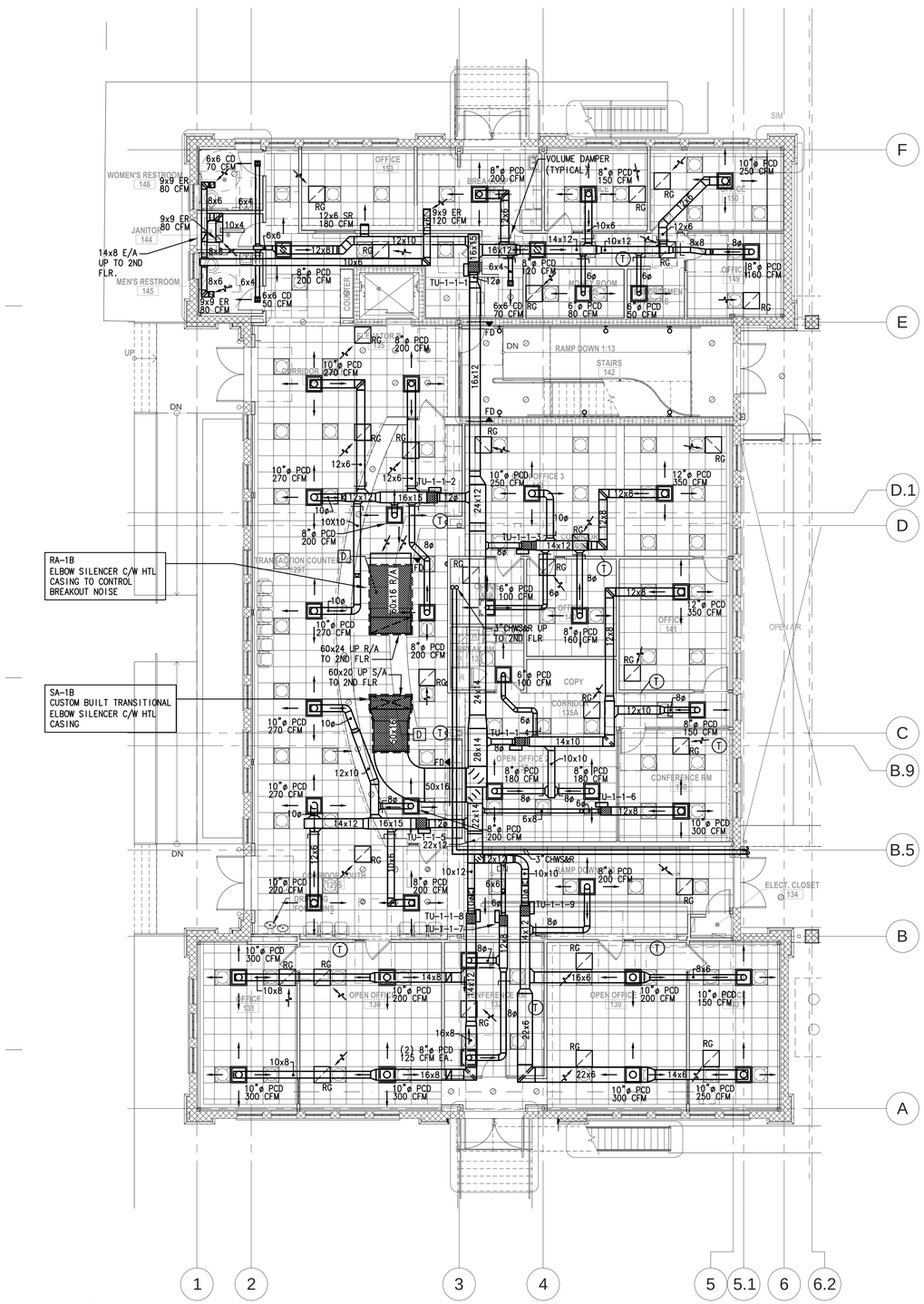

1 1st FLOOR MECHANICAL PLAN- WING B

M2.1B

1/8" = 1'-0"

VAV TERMINAL UNIT SCHEDULE

UNIT BOX#	CFM			INLET SIZE	MANUFACTURER & MODEL NO.	AREA SERVED – ROOM #	HEATER	ELECT.
	MIN.	MAX.	HTG					
TU-1-1-1	500	1510	500	12"ø	ETI-SDR	MONEY RM 148,CORR.147,COPY 152, OFFICES 150,151,152,153	2.5 KW	
TU-1-1-2	420	1410	420	12"ø	ETI-SDR	CORR.NORTH 129N, TRANSACTION COUNTER 129T	2 KW	
TU-1-1-3	260	860	260	8"ø	ETI-SDR	CORR.135B, OFFICES 139,140,143	1.5 KW	
TU-1-1-4	230	780	230	8"ø	ETI-SDR	CORR.135A, BREACK RM 136, OFFICE 137	1.5 KW	
TU-1-1-5	360	1200	360	12"ø	ETI-SDR	CORR.SOUTH 129S	2 KW	
TU-1-1-6	90	300	90	6"ø	ETI-SDR	CONF. RM 138	0.5 KW	
TU-1-1-7	75	250	–	6"ø	ETI-SDR	CONF. RM 132	–	
TU-1-1-8	330	1100	330	10"ø	ETI-SDR	CONF. RM 130,131	2 KW	
TU-1-1-9	270	900	270	10"ø	ETI-SDR	CONF. RM 130,133	1.5 KW	

ALL TERMINAL UNITS TO BE PRESSURE INDEPENDENT, NORMALLY OPEN, ELECTRICALLY ACTUATED
ALL TERMINALS TO HAVE RECTANGULAR OUTLETS FOR CONNECTION TO SHEET METAL
LOW VELOCITY DUCTWORK WITH SPLIT DRIVE JOINT DOWNSTREAM OF TERMINALS. UNITS
SELECTED AND INLETS SIZED AS REQUIRED FOR STATIC REGAIN DUCT SYSTEMS. NO REDUCTION
IN INLET SIZES WILL BE ACCEPTABLE. UNIT PRESSURE REQUIRED SHALL NOT EXCEED 0.25"W.G.
(NOT INCLUDING DOWNSTREAM DUCT AND DIFFUSER PRESSURE REQUIREMENT). UPON LOSS OF
POWER, BOX ACTUATORS SHALL RETURN BOX DAMPERS TO FULL-OPEN POSITION.
PROVIDE VAV TERMINAL UNITS WITH DOUBLE WALL CONSTRUCTION, ELECTRICAL CONTROLS ENCLOSURE WITH TRANSFORMER.

NOTES:

1. ALL OFFICES OR ROOMS WITH PARTITION WALLS TO THE UNDERSIDE OF STRUCTURE SHALL BE PROVIDED WITH FOUR SQUARE FEET OPENING IN FRAMING WALL TO COMMON AREA ABOVE CEILING. NO COMBUSTIBLE MATERIALS ALLOWED IN R/A PLENUM
2. RETRUN AIR IS THROUGH CEILING SPACE, ADEQUATE OPENINGS AND CLEARANCE MUST BE PROVIDED ABOVE CEILING TO ALLOW FOR THE RETURN AIR TO OPERATE PROPERLY.
3. THE GENERAL CONTRACTOR IS REQUIRED TO COORDINATE THE INSTALLATION OF ALL BUILDING SERVICES AND UTILITIES BEING INSTALLED BY THE VARIOUS TRADES. PARTICULAR ATTENTION IS CALLED TO THE INSTALLATION OF MEP AND FIRE SPRINKLER SYSTEMS ABOVE CEILING. THE GLYNN ARCHER SCHOOL IS A SIGNIFICANT LOCAL HISTORIC RESOURCE AND RESTORATION OF THE HISTORIC CHARACTERISTICS OF THE EXTERIOR ENVELOPE HAS BEEN GIVEN A HIGH PRIORITY. THE CEILING HEIGHTS HAVE BEEN DESIGNED TO RESPECT AND RETAIN THE HISTORIC WINDOW HEIGHTS. THE A/E DESIGN TEAM HAS ENDEAVORED TO RESOLVE THE MAJOR ISSUES. HOWEVER,, THE CONTRACTOR SHALL PLAN ALL ACTIVITIES TO ENSURE A MINIMUM OF INTERFERENCE BETWEEN THE TRADES.

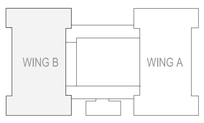

KEY PLAN WING B
1" = 80'-0"

REVISIONS:

KEY WEST CITY HALL AT GLYNN ARCHER

1300 WHITE STREET KEY WEST, FLORIDA
CITY OF KEY WEST

EDWIN O. CERNA LICENSE No 69808 STATE OF FLORIDA PROFESSIONAL ENGINEER

EDWIN O. CERNA, P.E. (MECHANICAL)
FL REG. #0069808

M.E.P.FP. ENGINEER:

HNGS ENGINEERS

HUFSEY, NICOLAIDES, GARCIA , SUAREZ CONSULTING ENGINEERS
4800 S.W. 74th Court Miami, Florida 33155
(305) 270-9935 Fax (305) 666-5893
HNGS # 13-0016
ENRIQUE J. SUAREZ, P.E. (MECHANICAL)
FL REG.#0015794
CARLOS GARCIA, P.E. (ELECTRICAL)
FL REG.#0014304

410 Angela Street
Key West, Florida 33040
Telephone (305) 296-1347
Facsimilie (305) 296-2727
Florida License AAC002022

Bender & Associates ARCHITECTS *p.a.*

Project N º 1305

1ST FLOOR MECHANICAL PLAN - WING B

Date: 8/8/14

PERMIT SET

M2.1B

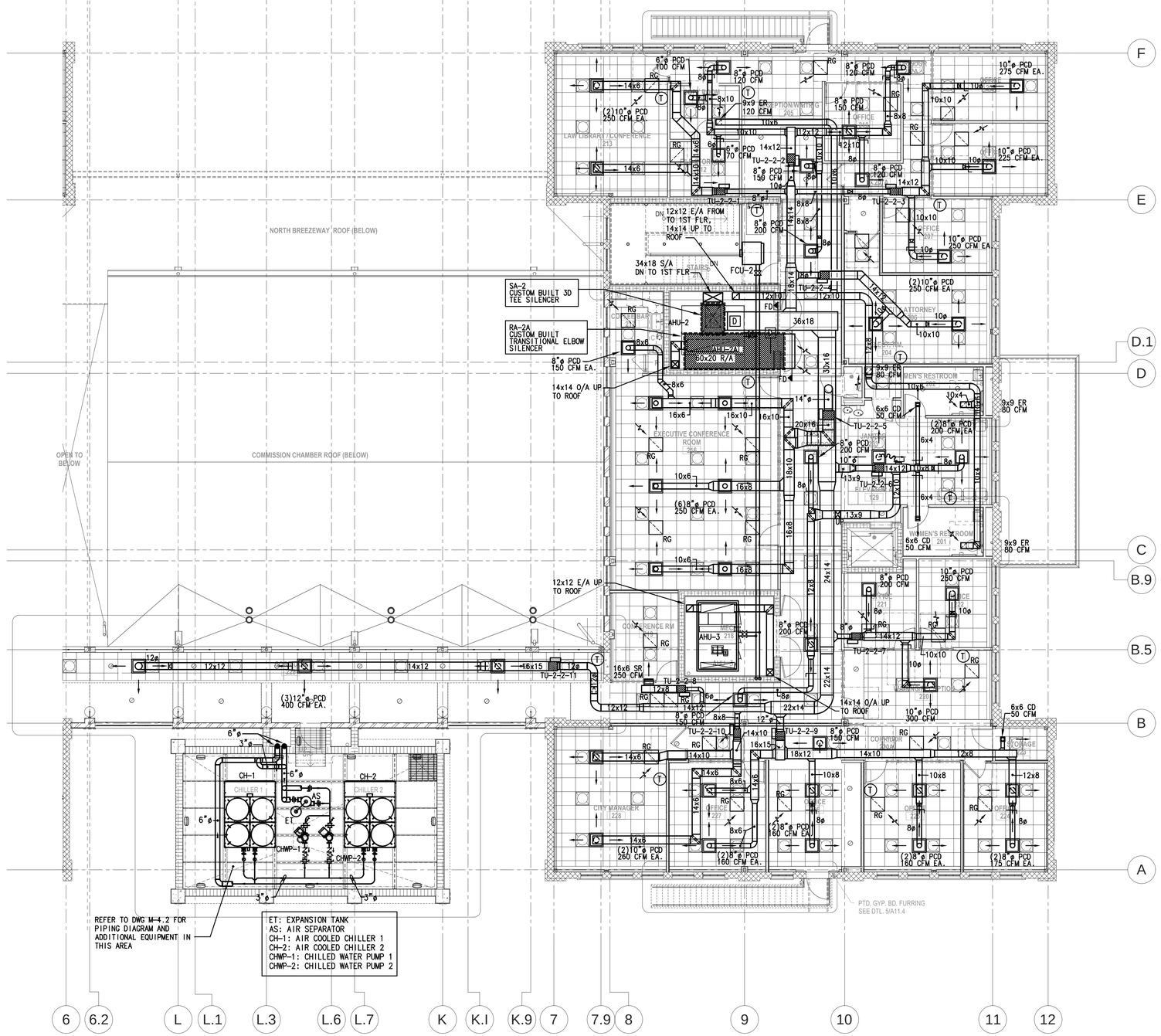

1 2ND FLOOR MECHANICAL PLAN - WING A

M2.2A

1/8" = 1'-0"

VAV TERMINAL UNIT SCHEDULE

UNIT BOX#	CFM MIN.	CFM MAX.	CFM HTG	INLET SIZE	MANUFACTURER & MODEL NO.	AREA SERVED – ROOM #	HEATER	ELECT.
TU-2-2-1	130	500	130	8"ø	ETI-SDR	LIBRARY 213	0.5 KW	
TU-2-2-2	360	1030	360	10"ø	ETI-SDR	OFFICE 210 RECEP 205, COPY 211, STORAGE 212	2 KW	
TU-2-2-3	225	750	225	8"ø	ETI-SDR	OFFICE 207, 208, 209	1 KW	
TU-2-2-4	150	500	150	8"ø	ETI-SDR	CITY ATTORNEY 206	1 KW	
TU-2-2-5	400	1650	400	14"ø	ETI-SDR	CONFERENCE RM 216	2 KW	
TU-2-2-6	300	1050	300	10"ø	ETI-SDR	LOBBY, CORRIDOR 200	1.5 KW	
TU-2-2-7	225	750	225	8"ø	ETI-SDR	OFFICE 221, 222, 220	1 KW	
TU-2-2-8	80	250	80	6"ø	ETI-SDR	CONFERENCE RM 219	0.5KW	
TU-2-2-9	450	1510	450	12"ø	ETI-SDR	STORAGE 223 OFFICES 224, 225, 226, 227	2 KW	
TU-2-2-10	150	520	150	8"ø	ETI-SDR	CITY MANAGER 228	1 KW	
TU-2-2-11	300	1200	300	12"ø	ETI-SDR	CORRIDOR 229	1.5 KW	

ALL TERMINAL UNITS TO BE PRESSURE INDEPENDENT, NORMALLY OPEN, ELECTRICALLY ACTUATED
ALL TERMINALS TO HAVE RECTANGULAR OUTLETS FOR CONNECTION TO SHEET METAL
LOW VELOCITY DUCTWORK WITH SPLIT DRIVE JOINT DOWNSTREAM OF TERMINALS. UNITS
SELECTED AND INLETS SIZED AS REQUIRED FOR STATIC REGAIN DUCT SYSTEMS. NO REDUCTION
IN INLET SIZES WILL BE ACCEPTABLE. UNIT PRESSURE REQUIRED SHALL NOT EXCEED 0.25"W.G.
(NOT INCLUDING DOWNSTREAM DUCT AND DIFFUSER PRESSURE REQUIREMENT). UPON LOSS OF
POWER, BOX ACTUATORS SHALL RETURN BOX DAMPERS TO FULL-OPEN POSITION.
PROVIDE VAV TERMINAL UNITS WITH DOUBLE WALL CONSTRUCTION, ELECTRICAL CONTROLS ENCLOSURE WITH TRANSFORMER.

NOTES:

1. ALL OFFICES OR ROOMS WITH PARTITION WALLS TO THE UNDERSIDE OF STRUCTURE SHALL BE PROVIDED WITH FOUR SQUARE FEET OPENING IN FRAMING WALL TO COMMON AREA ABOVE CEILING. NO COMBUSTIBLE MATERIALS ALLOWED IN R/A PLENUM
2. RETRUN AIR IS THROUGH CEILING SPACE, ADEQUATE OPENINGS AND CLEARANCE MUST BE PROVIDED ABOVE CEILING TO ALLOW FOR THE RETURN AIR TO OPERATE PROPERLY.
3. THE GENERAL CONTRACTOR IS REQUIRED TO COORDINATE THE INSTALLATION OF ALL BUILDING SERVICES AND UTILITIES BEING INSTALLED BY THE VARIOUS TRADES. PARTICULAR ATTENTION IS CALLED TO THE INSTALLATION OF MEP AND FIRE SPRINKLER SYSTEMS ABOVE CEILING. THE GLYNN ARCHER SCHOOL IS A SIGNIFICANT LOCAL HISTORIC RESOURCE AND RESTORATION OF THE HISTORIC CHARACTERISTICS OF THE EXTERIOR ENVELOPE HAS BEEN GIVEN A HIGH PRIORITY. THE CEILING HEIGHTS HAVE BEEN DESIGNED TO RESPECT AND RETAIN THE HISTORIC WINDOW HEIGHTS. THE A/E DESIGN TEAM HAS ENDEAVORED TO RESOLVE THE MAJOR ISSUES. HOWEVER,, THE CONTRACTOR SHALL PLAN ALL ACTIVITIES TO ENSURE A MINIMUM OF INTERFERENCE BETWEEN THE TRADES.

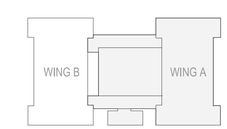

KEY PLAN WING A
1" = 80'-0"

REVISIONS:

KEY WEST CITY HALL AT GLYNN ARCHER

1300 WHITE STREET KEY WEST, FLORIDA
CITY OF KEY WEST

EDWIN O. CERNA LICENSE No 69808 STATE OF FLORIDA PROFESSIONAL ENGINEER

EDWIN O. CERNA, P.E. (MECHANICAL)
FL REG. #0069808

M.E.P.FP. ENGINEER:

HNYGS ENGINEERS

HUFSEY, NICOLAIDES, GARCIA , SUAREZ
CONSULTING ENGINEERS
4800 S.W. 72nd Court Miami, Florida 33155
(305) 270-9935-Fax (305) 666-5891
HNGS # 13-0016
ENRIQUE J. SUAREZ, P.E. (MECHANICAL)
FL REG.#0055794
CARLOS GARCIA, P.E. (ELECTRICAL)
FL REG.#0014584

410 Angela Street
Key West, Florida 33040
Telephone (305) 296-1347
Facsimilie (305) 296-2727
Florida License AAC002022

Bender & Associates ARCHITECTS p.a.

Project N º 1305

2ND FLOOR MECHANICAL PLAN - WING A

Date: 8/8/14

PERMIT SET

M2.2A

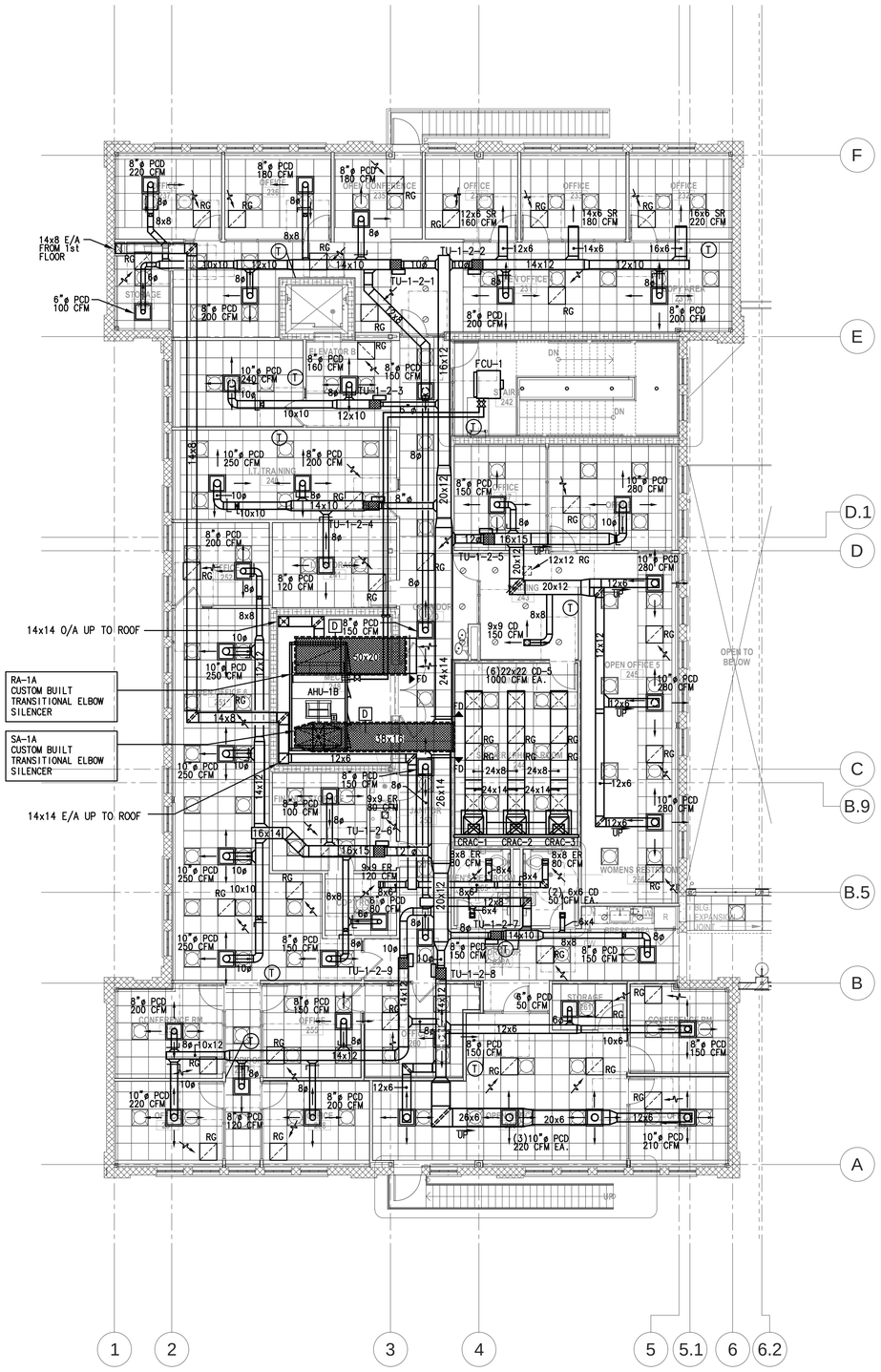

1 2ND FLOOR MECHANICAL PLAN - WING B

M2.2B 1/8" = 1'-0"

VAV TERMINAL UNIT SCHEDULE

UNIT BOX#	CFM MIN.	CFM MAX.	CFM HTG	INLET SIZE	MANUFACTURER & MODEL NO.	AREA SERVED – ROOM #	HEATER	ELECT.
TU-1-2-1	320	1180	320	10"ø	ETI-SDR	OFFICE 235, 236,237, STORAGE 238 CORRIDOR 230	1.5 KW	120 V
TU-1-2-2	340	1140	340	10"ø	ETI-SDR	OFFICE 231, 232, 233, 234, COPY 231A	1.5 KW	120 V
TU-1-2-3	120	400	120	6"ø	ETI-SDR	OFFICE 239	0.5 KW	
TU-1-2-4	170	570	170	8"ø	ETI-SDR	I.T.TRAINING 240,I.T.STORAGE 241	1 KW	
TU-1-2-5	420	1420	420	12"ø	ETI-SDR	OFFICE 247, 246,WAITING 243, OFFICE 245	2 KW	
TU-1-2-6	550	1530	550	12"ø	ETI-SDR	FINANCE STORAGE 254, OFFICE 251,252, COPY 253	2.5 KW	
TU-1-2-7	–	550	–	8"ø	ETI-SDR	CORR 230, 230A, WOMEN RM 266, MENS RM 265	–	
TU-1-2-8	360	1070	360	10"ø	ETI-SDR	OFFICE 259,260,261,263,262	2 KW	
TU-1-2-9	360	1040	360	10"ø	ETI-SDR	OFFICE 255, CONFERENCE RM 256,257,258,280,CORR. 251A	2 KW	

ALL TERMINAL UNITS TO BE PRESSURE INDEPENDENT, NORMALLY OPEN, ELECTRICALLY ACTUATED
ALL TERMINALS TO HAVE RECTANGULAR OUTLETS FOR CONNECTION TO SHEET METAL
LOW VELOCITY DUCTWORK WITH SPLIT DRIVE JOINT DOWNSTREAM OF TERMINALS. UNITS
SELECTED AND INLETS SIZED AS REQUIRED FOR STATIC REGAIN DUCT SYSTEMS. NO REDUCTION
IN INLET SIZES WILL BE ACCEPTABLE. UNIT PRESSURE REQUIRED SHALL NOT EXCEED 0.25"W.G.
(NOT INCLUDING DOWNSTREAM DUCT AND DIFFUSER PRESSURE REQUIREMENT). UPON LOSS OF
POWER, BOX ACTUATORS SHALL RETURN BOX DAMPERS TO FULL-OPEN POSITION.
PROVIDE VAV TERMINAL UNITS WITH DOUBLE WALL CONSTRUCTION, ELECTRICAL CONTROLS ENCLOSURE WITH TRANSFORMER.

NOTES:

1. ALL OFFICES OR ROOMS WITH PARTITION WALLS TO THE UNDERSIDE OF STRUCTURE SHALL BE PROVIDED WITH FOUR SQUARE FEET OPENING IN FRAMING WALL TO COMMON AREA ABOVE CEILING. NO COMBUSTIBLE MATERIALS ALLOWED IN R/A PLENUM
2. RETRUN AIR IS THROUGH CEILING SPACE, ADEQUATE OPENINGS AND CLEARANCE MUST BE PROVIDED ABOVE CEILING TO ALLOW FOR THE RETURN AIR TO OPERATE PROPERLY.
3. THE GENERAL CONTRACTOR IS REQUIRED TO COORDINATE THE INSTALLATION OF ALL BUILDING SERVICES AND UTILITIES BEING INSTALLED BY THE VARIOUS TRADES. PARTICULAR ATTENTION IS CALLED TO THE INSTALLATION OF MEP AND FIRE SPRINKLER SYSTEMS ABOVE CEILING. THE GLYNN ARCHER SCHOOL IS A SIGNIFICANT LOCAL HISTORIC RESOURCE AND RESTORATION OF THE HISTORIC CHARACTERISTICS OF THE EXTERIOR ENVELOPE HAS BEEN GIVEN A HIGH PRIORITY. THE CEILING HEIGHTS HAVE BEEN DESIGNED TO RESPECT AND RETAIN THE HISTORIC WINDOW HEIGHTS. THE A/E DESIGN TEAM HAS ENDEAVORED TO RESOLVE THE MAJOR ISSUES. HOWEVER,, THE CONTRACTOR SHALL PLAN ALL ACTIVITIES TO ENSURE A MINIMUM OF INTERFERENCE BETWEEN THE TRADES.

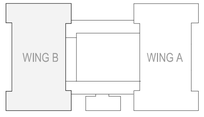

KEY PLAN WING B
1" = 80'-0"

REVISIONS:

KEY WEST CITY HALL AT GLYNN ARCHER

1300 WHITE STREET KEY WEST, FLORIDA
CITY OF KEY WEST

EDWIN O. CERNA LICENSE No 69808 STATE OF FLORIDA PROFESSIONAL ENGINEER
EDWIN O. CERNA, P.E. (MECHANICAL)
FL REG. #0069808

M.E.P.FP. ENGINEER:
HNGS ENGINEERS
HUFSEY, NICOLAIDES, GARCIA , SUAREZ CONSULTING ENGINEERS
4800 S.W. 74th Court Miami, Florida 33155
(305) 270-9935 Fax (305) 666-5891
HNGS # 13-0016
ENRIQUE J. SUAREZ, P.E. (MECHANICAL) FL REG.#0015794
CARLOS GARCIA, P.E. (ELECTRICAL) FL REG.#0014104

410 Angela Street
Key West, Florida 33040
Telephone (305) 296-1347
Facsimilie (305) 296-2727
Florida License AAC002022
Bender & Associates ARCHITECTS p.a.

Project N º 1305

2ND FLOOR MECHANICAL PLAN - WING B

Date: 8/8/14

PERMIT SET

M2.2B

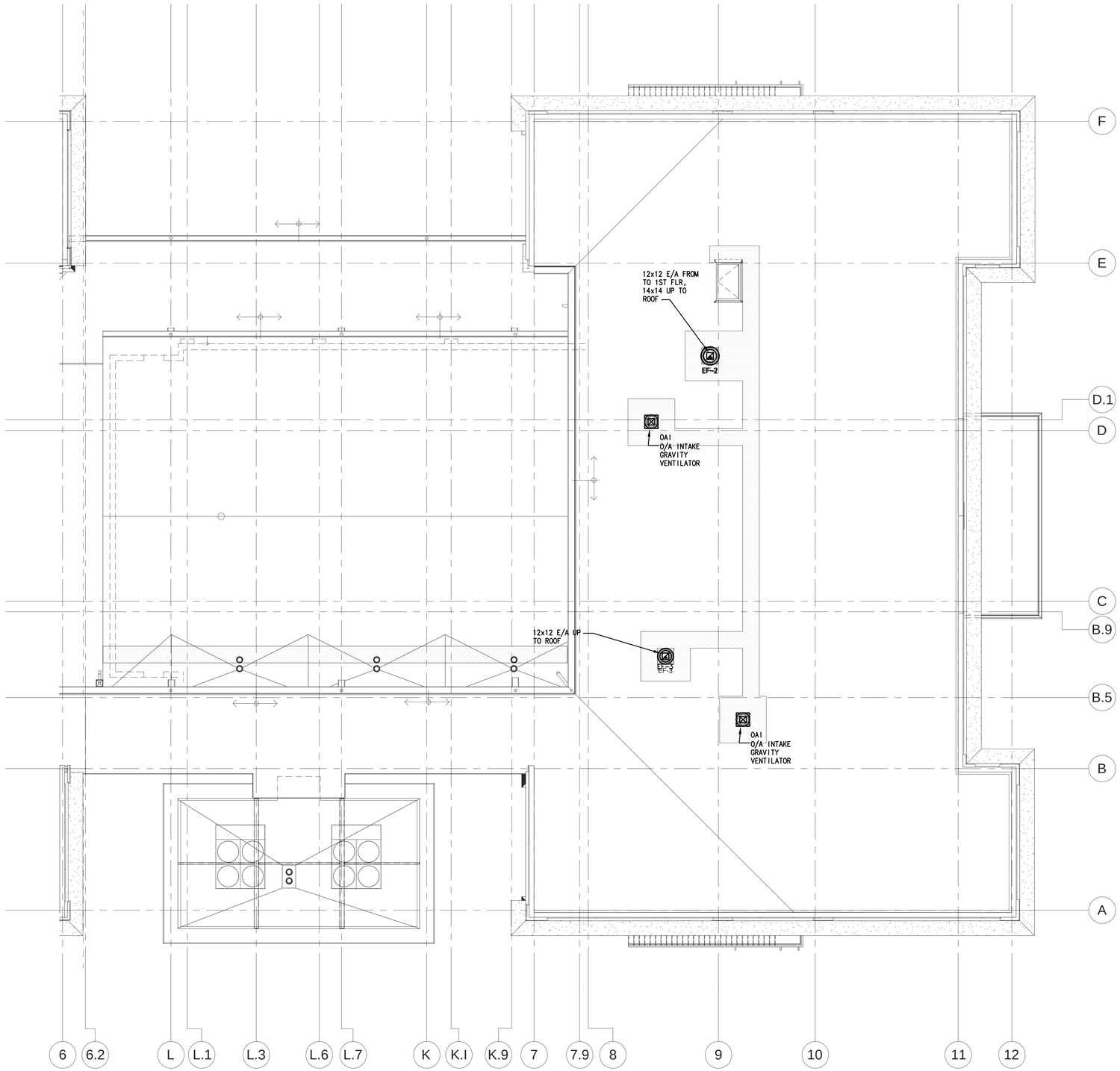

1 ROOF MECHANICAL PLAN - WING A

M3.1A

1/8" = 1'-0"

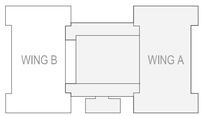

KEY PLAN WING A
1" = 80'-0"

REVISIONS:

KEY WEST CITY HALL AT GLYNN ARCHER

1300 WHITE STREET KEY WEST, FLORIDA
CITY OF KEY WEST

EDWIN O. CERNA LICENSE No 69808 STATE OF FLORIDA PROFESSIONAL ENGINEER

EDWIN O. CERNA, P.E. (MECHANICAL)
FL REG. #0069808

M.E.P.FP. ENGINEER:

HNGS ENGINEERS

HUFSEY, NICOLAIDES, GARCIA , SUAREZ CONSULTING ENGINEERS
4800 S.W. 74th Court, Miami, Florida 33155
(305) 270-9935 Fax (305) 666-5891
HNGS # 13-0016

ENRIQUE J. SUAREZ, P.E. (MECHANICAL)
FL REG.#0015794

CARLOS GARCIA, P.E. (ELECTRICAL)
FL REG.#0014104

410 Angela Street
Key West, Florida 33040
Telephone (305) 296-1347
Facsimilie (305) 296-2727
Florida License AAC002022

Bender & Associates ARCHITECTS *p.a.*

Project N º 1305

ROOF MECHANICAL PLAN - WING A

Date: 8/8/14

PERMIT SET

M3.1A

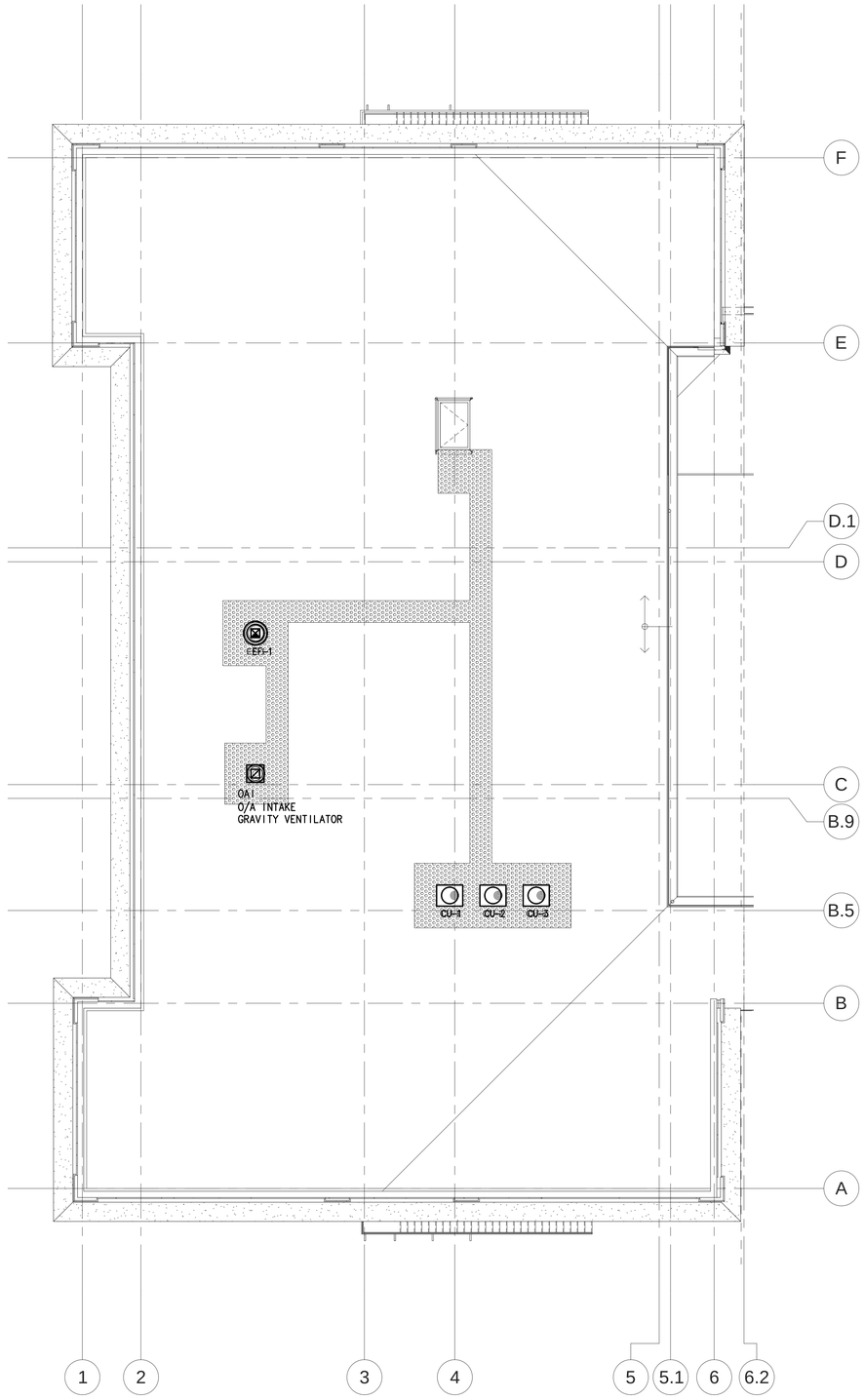

1 ROOF MECHANICAL PLAN - WING B
M3.1B
1/8" = 1'-0"

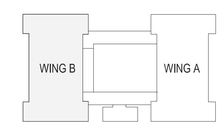

KEY PLAN WING B
1" = 80'-0"

REVISIONS:

KEY WEST CITY HALL AT GLYNN ARCHER

1300 WHITE STREET KEY WEST, FLORIDA
CITY OF KEY WEST

EDWIN O. CERNA LICENSE No 69808 STATE OF FLORIDA PROFESSIONAL ENGINEER
EDWIN O. CERNA, P.E. (MECHANICAL)
FL REG. #0069808

M.E.P.FP. ENGINEER:
HNGS ENGINEERS
HUFSEY, NICOLAIDES, GARCIA , SUAREZ CONSULTING ENGINEERS
4800 S.W. 74th Court Miami, Florida 33155
(305) 270-9935 Fax (305) 666-5891
HNGS # 13-0016
ENRIQUE J. SUAREZ, P.E. (MECHANICAL) FL REG.#0015794
CARLOS GARCIA, P.E. (ELECTRICAL) FL REG.#0014104

410 Angela Street
Key West, Florida 33040
Telephone (305) 296-1347
Facsimilie (305) 296-2727
Florida License AAC002022
Bender & Associates ARCHITECTS p.a.

Project N º 1305
ROOF MECHANICAL PLAN - WING B
Date: 8/8/14

PERMIT SET

M3.1B

A/C GENERAL NOTES

1. GENERAL:
   A. SUBMIT MANUFACTURER'S DATA AND SHOP DRAWINGS ON ALL A/C EQUIPMENT AND DUCTWORK FOR REVIEW BEFORE INSTALLATION.
   B. INSTALL ALL EQUIPMENT AND MATERIALS IN ACCORDANCE WITH MANUFACTURER'S RECOMMENDATIONS AND PROJECT BOOK SPECIFICATIONS.
   C. ALL DIMENSIONS AND ACTUAL CONSTRUCTION CONDITIONS MUST BE VERIFIED AT THE JOB SITE.
   D. CONTRACTOR SHALL COORDINATE ALL HIS WORK WITH OTHER TRADES AND FIELD CONDITIONS.
   E. CONTRACTOR, PRIOR TO SUBMITTING HIS PROPOSAL PRICE, SHALL VISIT THE SITE, FAMILIARIZE HIMSELF WITH ALL FIELD CONDITIONS, AND SHALL OBTAIN ALL REQUIRED INFORMATION NECESSARY TO COMPLETE THE JOB. ANY DISCREPANCIES BETWEEN WHAT IS SHOWN ON THE DRAWINGS AND ACTUAL WORK REQUIRED TO COMPLETE THE JOB SHALL BE TAKEN INTO ACCOUNT IN THE PROPOSAL PRICE.
2. ALL WORK SHALL BE DONE IN ACCORDANCE WITH THE FOLLOWING CODES AND STANDARDS:
   A. FLORIDA BUILDING CODES
   B. NFPA - 90A AIR CONDITIONING AND VENTILATION
   C. NFPA - 91 BLOWER AND EXHAUST SYSTEMS
   D. ASHRAE GUIDE - EQUIPMENT, SYSTEM AND APPLICATIONS
   E. SMACNA - LOW VELOCITY DUCT CONSTRUCTION
   F. NFPA-101 SAFETY TO LIFE FROM FIRE IN BUILDINGS
   G. LEED NC V. 2009.
3. MATERIALS:
   A. DUCTWORK
   1. GALVANIZED SHEET METAL CONSTRUCTED IN ACCORDANCE WITH SMACNA STANDARDS. CORRIDOR SUPPLY RISERS SHALL BE CONSTRUCTED TO A MINIMUM OF 3"WG PRESSURE CLASS.

      RESIDENTIAL UNITS ONLY: FIBERGLASS RECTANGULAR GLASS DUCT WITH ALUMINUM FOIL CASING, LISTED U.L. AS CLASS 1 DUCT MEETING REQUIREMENTS OF NFPA, BULLETIN 90A AND FLORIDA EFFICIENCY CODE LATEST EDITION. FIBERGLASS DUCT SHALL BE PROVIDED WITH EPA REGISTERED BIOCIDE. REFER TO SPECIFICATIONS FOR DUCTWORK INSTALLATION.
   2. PROVIDE AIR EXTRACTORS IN ALL RECTANGULAR BRANCH TAPS.
   3. FLEXIBLE DUCTS: DUCT SHALL BE LIGHTWEIGHT CONSTRUCTED WITH CORROSION RESISTANT CORE AND REINFORCED WITH BONDED HELIX. DUCT TO BE INSULATED WITH 2" THICK, 1 LB. FIBERGLASS BLANKET INSULATION WITH ALUMINUM FILM VAPOR BARRIER. DUCT SHALL BE LISTED CLASS 1, U.L. STANDARD 181.
   4. ROUND BRANCH TAPS SHALL BE MADE WITH "SPIN-IN" TYPE FITTINGS WITH VOLUME DAMPER AND ADAPTER FOR CONNECTION TO FIBERGLASS DUCT.
   B. INSULATION
   1. INSULATE ALL AIR CONDITIONING SUPPLY, RETURN AND OUTSIDE AIR DUCTWORK WITH MINIMUM R=6.0 BLANKET TYPE OF NOT LESS THAN 1 PCF DENSITY WITH FIRE RETARDANT FOIL FACING. MATERIAL SHALL BE UNDERWRITERS' LABORATORIES LABELED TO COMPLY WITH NFPA 90A. FASTEN WITH FLARE TYPE STAPLES ON 1" CENTERS ALONG OVERLAPS. SEAL ALL STAPLE HEADS, LAPS AND BREAKS IN INSULATION WITH FIRE RESISTANT MASTIC.
   2. INSULATE ALL AIR CONDITIONING DUCTWORK EXPOSED TO OUTDOORS AS FOLLOWS: COVER WITH 2" THICK DUCTBOARD, R=8.0, WITH FOIL COVER, APPLY 1 LAYER FOSTER 4500 MASTIC EMBEDED WITH GLASSFAB INTO MASTIC, FINISH WITH 2ND LAYER OF FOSTER 4500 MASTIC THROUGHOUT.
   4. INSULATE NECK, THROATS AND COLLARS OF SUPPLY OUTLET RUNOUTS ABOVE CEILINGS. ALL DUCTWORK INSULATION AS PER NAIMA STANDARDS AND MANUFACTURER'S RECOMMENDATIONS.
   5. CHILLED WATER AND REFRIGERANT SUCTION PIPING (ABOVEGROUND IN BUILDING AIR CONDITIONING PLENUMS): INSULATE WITH PREFORMED SPLIT SECTIONAL PIPE INSULATION, PITTSBURGH CORNING'S "FOAMGLAS". USE 2" THICK INSULATION ON PIPES 6" DIAMETER AND SMALLER AND 2-1/2" THICK INSULATION ON PIPES 8" DIAMETER AND LARGER. INSULATION TO BE SECURED WITH 16 GA COPPERWELD WIRE ON 12" CENTERS. COVER WITH FIRE RESISTING "STAY-DRY" JACKET. SECURE ALL LAPS WITH FLARE TYPE STAPLES ON 1" CENTER, COVER STAPLE HEADS WITH MASTIC. FIELD FABRICATE FITTINGS WITH CELLULAR GLASS AND COVER AND WHEREVER EXPOSED WITH "STAY-DRY" JACKETS EMBEDDED IN MASTIC. IN AIR HANDLING ROOMS, COVER INSULATION WITH FIELD APPLIED LAMOTIPE JACKETING ON STRAIGHT PIPE. ON FITTINGS, FLANGES AND VALVES, FABRICATE FROM PIPE INSULATION AND APPLY A SMOOTHING COAT OF INSULATION CEMENT AND WHITE GLASFAB AND WHITE MASTIC, BENJAMIN FOSTER 30-35, OR APPROVED EQUAL.
   6. CHILLED WATER (UNDERGROUND AND EXPOSED TO WEATHER): INSULATE WITH 2-1/2" THICK FOAMGLAS INSULATION 3" THICK FOR 6" AND SMALLER AND 3-1/2" FOR 6" THRU 12". COVER WITH PITTSBURGH CORNING SELF SEALING "PITTWRAP" WHEN UNDERGROUND, .016 SMOOTH ALUMINUM JACKET WHEN EXPOSED TO WEATHER.
   7. ENGINE EXHAUST: INSULATE INSIDE BUILDING WITH 2-1/2" THICK CALCIUM SILICATE SECURELY WITH 16 GAUGE GALVANIZED WIRE. COVER WITH 1" OPEN WIRE MESH AND FINISH WITH 1/2" INSULATING CEMENT APPLIED IN TWO COATS WITH THE LAST COAT CONTAINING PORTLAND CEMENT TROWELED TO A SMOOTH HARD FINISH. FLEXIBLE EXHAUST PIPING SHALL NOT BE INSULATED.
   8. NO INSULATION SHALL BE INSTALLED UNTIL THE SYSTEM HAS BEEN CHECKED AND FREE OF ALL LEAKS.
   9. MISCELLANEOUS: CAP VALVES, DRAIN AND VENT LINES AND MISCELLANEOUS APPURTENANCES SUBJECT TO SWEATING WITH FOAM PLASTIC CAPS WITH APPROVED FLAME SPREAD 25 OR LESS AND SMOKE DEVELOPED RATING 50 OR LESS.
   10. PROTECT ALL PIPE INSULATION AT HANGERS WITH GALVANIZED SHEET METAL SHIELDS.
   C. PIPING
   1. CHILLED WATER, CONDENSER WATER AND FUEL OIL PIPING:
   A. PIPING: BLACK STEEL, ASTM-A-53 GRADE B SCHEDULE 40.
   B. PIPE FITTINGS: 2" AND SMALLER, THREADED STEEL PIPE WITH MALLEABLE IRON FITTINGS, 300 LB. BANDED. USE WELDED STEEL PIPE FOR ALL PIPING 2-1/2" IN DIAMETER AND LARGER WITH CARBON STEEL FITTINGS, ASTM-A-234-WPB, BUTT WELD TYPE, MANUFACTURED BY TAYLOR FORGE, TUBE TURNS, MID-WEST OR CRANE. "WELDOLETS" MAY BE USED ONLY WHERE BRANCH PIPING IS TWO OR MORE SIZES SMALLER THAN MAIN AND THE MAIN IS LARGER THAN 4", OTHERWISE FITTINGS TO BE FABRICATED "TEES". MAKE ALL PIPING TURNS WITH FABRICATED LONG RADIUS ELBOWS, UNLESS SPECIFICALLY DESIGNATED ON THE DRAWINGS.
   B. USE ECCENTRIC REDUCERS ONLY FOR PIPE SIZE CHANGES IN HORIZONTAL PIPING.
   C. VICTAULIC FITTINGS SHALL BE ACCEPTABLE FOR CHILLED AND CONDENSER WATER (REFER TO SPEC BOOK.)
   D. PROVIDE DISTRIBUTION PIPING TO TERMINAL EQUIPMENT 1" AND SMALLER, TYPE L COPPER TUBE ASTM-B-88 WITH 95/5 SOLDER.
   E. REFRIGERANT PIPING - USE COPPER TUBING TYPE "L" WITH WROUGHT SOLDER FITTINGS AND SILVER SOLDER. REFRIGERANT LINES AS SIZED BY MANUFACTURER.
   F. INSULATE REFRIGERANT SUCTION PIPING WITH 3/4" THICK ARMAFLEX SLIPPED UNSPLIT OVER PIPE, FLAME SPREAD 25 OR LESS, SMOKE DEVELOPED RATING 100 OR LESS. PAINT AS RECOMMENDED BY MANUFACTURER WHEN EXPOSED OUTDOORS.
   2. CONDENSATE PIPING:
      A. PIPING: COPPER TYPE 'L' WITH SOLDERED FITTINGS.
4. HANGERS - 4" AND SMALLER GRINNEL #115.
5. EQUIPMENT AS SPECIFIED ON SCHEDULE.
6. PROVIDE TURNING VANES IN ALL ELBOWS (EXCEPT ON GREASE DUCTS), AIR EXTRACTORS OR ADJUSTABLE TURNING VANES AT ALL BRANCH TAKEOFFS AND ALL REQUIRED DAMPERS TO PROPERLY BALANCE THE SYSTEM.
7. CONTRACTOR SHALL VERIFY EXACT LOCATION OF ALL DIFFUSERS, GRILLES, AND REGISTERS WITH ARCHITECT'S DRAWINGS.
8. PROVIDE APPROVED FIRE OR FIRE/SMOKE DAMPERS AT ALL PENETRATIONS OF FIRE RATED PARTITIONS, WALLS AND CEILINGS AS REQUIRED BY CODE. FIRE/SMOKE DAMPERS SHALL BE CLASS I, 350 DEG. LOW LEAKAGE TYPE, UL-555S LISTED AND INSTALLED PER MANUFACTURER'S DIRECTIONS.
9. ALL MOTORIZED DAMPERS SHALL BE AIR FOIL INSULATED LOW LEAKAGE TYPE. UL-555S LISTED.
10. TOILET, PRESSURIZATION AND SMOKE EXHAUST RISER DUCT FABRICATION SHALL BE GALVANIZED SHEET METAL 24 GAUGE MINIMUM.
11. SUPPLY, RETURN, OUTSIDE AND EXHAUST AIR DUCTS IN UNCONDITIONED AREAS MUST BE INSULATED WITH R-6.0 MINIMUM.
12. NO PVC OR ANY COMBUSTIBLE MATERIALS ALLOWED IN AC CLOSET PLENUM/ RETURN AIR PLENUM
13. PROVIDE ACCESS PANELS WHERE INDICATED OR REQUIRED FOR SERVICE AT ALL VALVES,MECHANICAL EQUIPMENT,FAN, AHU'S, CONTROL DEVICES AND DAMPERS WHICH REQUIRE ADJUSTMENT. USE MILCOR STYLE M FOR EXPOSED MASONRY APPLICATION, STYLE B FOR ACOUSTICAL PLASTER APPLICATION . PROVIDE U.L. LABELED FIRE RATED TYPE WHERE REQUIRED. FURNISH WITH FACTORY APPLIED, BAKED-ON PRIME COAT AND STANDARD FLUSH TYPE METAL CAM LOCK.
14. PROVIDE ISOLATION DI-ELECTRIC FITTINGS BETWEEN STEEL AND COPPER.
15. INSTALL MANUAL AIR VENTS AT ALL HIGH POINTS OF PIPING SYSTEMS AND WATER COILS. PROVIDE AUTOMATIC VENTS WHERE INDICATED ON THE DRAWINGS.
16. TEST ALL PIPING WITH WATER TO 250 PSIG BEFORE INSULATING.
17. COAT ALL UNDERGROUND COPPER PIPING WITH 2 COATS OF BITUMASTIC PAINT.
18. PROVIDE DUCT MTD. SMOKE DETECTORS IN THE SUPPLY AIR DUCT DOWNSTREAM OF ALL AIR HANDLERS/FCU'S 2000 CFM OR MORE AND AT THE DISCHARGE SIDE OF ALL SMOKE SUPPLY FANS (SSF.) UPON ACTIVATION OF DETECTOR, UNITS SHALL SHUT DOWN.
19. VFD'S, VARIABLE FREQUENCY DRIVES, ABB ACH550 WITH ELECTRONICALLY CONTROL, 2 CONTACTOR BY-PASS SHALL BE THE BASICS FOR COMPARISION. ALL VFD'S SHALL HAVE 5% LINE REACTOR (FOR HARMONICS) EMI FILTER, RFI FILTER AND EQUIPPED WITH BACNET, FLN, N2 & MODBUS CAPABILITIES.

    ALL DRIVES SHALL HAVE 30% OVER/UNDER VOLTAGE PROTECTION AGAINST BROWN OUTS OR SINGLE PHASING.

    VFD'S EXPOSED TO WEATHER SHALL BE ENCLOSED IN NEMA 4X VENTILATED ENCLOSURE, FOR INDOOR LOCATION SHALL BE NEMA 1. ANY VF'D WITHOUT DC CHOKE THAT IS GREATER THAN 100 FT. FROM POINT OF CONTACT SHALL INCLUDE A DVDT FILTER.
20. ALL DUCTWORK CONNECTED TO LOUVERS AND GRILLES AT EXTERIOR WALLS SHALL HAVE BOTTOM OF DUCT CONSTRUCTED WITH MINIMUM 1/8 IN/FT. SLOPE FOR A DISTANCE OF FOUR FEET SLOPING BACK TOWARDS LOUVER TO ALLOW INCIDENTAL WATER INTRUSION TO DRAIN BACK OUT THROUGH LOUVER. CONNECTION TO LOUVER SHALL BE RENDERED WATER-TIGHT AND NO OBSTRUCTION SHALL OCCUR INSIDE DUCTWORK WHICH WOULD PREVENT PROPER DRAINAGE BACK TO LOUVER.
20. COORDINATE LOCATION OF DUCTWORK WITH OTHER TRADES, PARTICULARLY WHERE DUCTS RUN THROUGH STRUCTURAL ELEMENTS. PROVIDE ALL NECESSARY SLEEVES BEFORE CONCRETE IS POURED.
21. GENERAL: THE DESIGN DRAWINGS ARE GENERALLY DIAGRAMMATIC. THEY DO NOT SHOW EVERY BEND. OFFSET, ELBOW OR OTHER FITTING WHICH MAY BE REQUIRED IN THE PIPING AND/OR DUCTWORK FOR INSTALLATION IN THE SPACES ALLOTTED. CAREFUL COORDINATION OF THE WORK OF THIS SECTION WITH THAT OTHER TRADES AND FIELD CONDITIONS IS NECESSARY TO AVOID CONFLICTS.
22. <u>TEST & BALANCE NOTES</u>
    1. PROCURE THE SERVICES OF AN INDEPENDENT BALANCE & TESTING AGENCY TO PERFOM TEST AND BALANCE TO ENTIRE SYSTEM "AIR & WATER", REFER TO SPECIFICATION FOR DETAILS.

AIR DISTRIBUTION SCHEDULE

SYMBOL	MANUFACTURER & MODEL NO.	DESCRIPTION
CD	TITUS #TDCA-AA	LOUVER FACE CEILING DIFFUSER WITH SR ROUND NECK ADAPTOR, MANUAL VOLUME DAMPER, MODULE SIZE AND TYPE AS REQUIRED TO FIT CEILING CONSTRUCTION SHOWN ON ARCHITECTURAL DRAWINGS. PROVIDE OPPOSED BLADE VOLUME DAMPER.
RG	TITUS #4FL	ALUMINUM RETURN GRILLE. MODULE SIZE AND TYPE AS REQUIRED TO FIT CEILING CONSTRUCTION SHOWN ON ARCHITECTURAL DRAWINGS. PROVIDE WITH OPPOSED BLADE VOLUME DAMPER.
FRG	TITUS #4FFL	FILTER RETURN GRILLE. MODULE SIZE AND TYPE AS REQUIRED TO FIT CEILING CONSTRUCTION SHOWN ON ARCHITECTURAL DRAWINGS. PROVIDE OPPOSED BLADE VOLUME DAMPER.
ER	TITUS #4FL	ALUMINUM EXHAUST GRILLE. MODULE SIZE AND TYPE AS REQUIRED TO FIT CEILING CONSTRUCTION SHOWN ON ARCHITECTURAL DRAWINGS. PROVIDE OPPOSED BLADE VOLUME DAMPER.
LCD-X	TITUS #MP-38	LINEAR SLOT TYPE CEILING DIFFUSER, NUMBER OF SLOTS INDICATED BY SUFFIX (X). LENGTH SHOWN ON DRAWINGS. PROVIDE FACTORY ACOUSTICALLY LINED PLENUM CONNECTORS MID-TYPE. AT HARD CEILING AREAS, PROVIDE YOUNG REGULATOR TELEFLEXING DUCT DAMPER ADJUSTER, ACCESSIBLE THRU FACE OF DIFFUSER.
LCR-X	TITUS #MLR-38	LINEAR SLOT TYPE CEILING RETURN, NUMBER OF SLOTS INDICATED BY SUFFIX (X). LENGTH SHOWN ON DRAWINGS.
SR	TITUS #272FS	SIDEWALL SUPPLY REGISTER/GRILLE, FOUR WAY DEFLECTION. FOR REGISTER, PROVIDE OPPOSED BLADE VOLUME DAMPER.
PCD	TITUS #OMNI-AA	SQUARE PLAQUE CEILING DIFFUSER WITH ROUND NECK CONNECTION VOLUME DAMPER, MODULE SIZE AND TYPE AS REQUIRED TO FIT CEILING CONSTRUCTION SHOWN ON ARCHITECTURAL DRAWINGS. WHERE FOR CEILING WITH REGRESSED TILE, PROVIDE DIFFUSER TO FIT FLUSH WITH BOTTOM OF TILE. PROVIDE VOLUME DAMPER.
PCR	TITUS #4FL	CEILING RETURN GRILLE WITH OPPOSED BLADE DAMPER, MODULE SIZE AND TYPE AS REQUIRED TO FIT CEILING CONSTRUCTION SHOWN ON ARCHITECTURAL DRAWINGS. WHERE FOR CEILING WITH REGRESSED TILE, PROVIDE DIFFUSER TO FIT FLUSH WITH BOTTOM OF TILE.

NOTES:
ALL FINISHED TO BE OFF-WHITE BAKED ENAMEL EXCEPT AS OTHERWISE NOTED ABOVE OR AS SPECIFICALLY SHOWN ON THE DRAWINGS.

ALL DUCTWORK CONNECTED TO LOUVERS AND GRILLES AT EXTERIOR WALLS SHALL HAVE BOTTOM OF DUCT CONSTRUCTED WITH MINIMUM 1/8 IN/FT SLOPE FOR A DISTANCE OF FOUR FEET SLOPING BACK TOWARDS LOUVER TO ALLOW INCIDENTAL WATER INTRUSION TO DRAIN BACK OUT THROUGH LOUVER. CONNECTION TO LOUVER SHALL BE RENDERED WATER-TIGHT AND NO OBSTRUCTION SHALL OCCUR INSIDE DUCTWORK WHICH WOULD PREVENT PROPER DRAINAGE BACK TO LOUVER.

AIR CONDITIONING LEGEND

SYMBOL	DESCRIPTION
CHWS	CHILLED WATER SUPPLY
CHWR	CHILLED WATER RETURN
CWS	CONDENSER WATER SUPPLY
CWR	CONDENSER WATER RETURN
RL	REFRIGERANT LIQUID
RS	REFRIGERANT SUCTION
USS	UNDERSIDE OF STRUCTURE
axb	DUCT, SIZE SHOWN IN INCHES
	MANUAL OPERATED DAMPER
	MOTOR OPERATED DAMPER
SD	SPLITTER DAMPER
	SQUARE ELBOW W/ TURNING VANES
E	AIR EXTRACTOR
	DUCT TRANSITION
	SQ. TO ROUND TRANSITION
	FLEXIBLE DUCT
	BRANCH TAP WITH CONICAL FITTING
HT	RADIUS ELBOW WITH HEEL TAP
	RADIUS ELBOW, 5 PIECE IF AVAILABLE, 3PIECE OR SMOOTH OTHERWISE
	DIVIDED FLOW 'Y' TYPE FITTING
S/A	SUPPLY AIR
O/A	OUTSIDE AIR
E/A	EXHAUST AIR
EF	EXHAUST FAN
DH	ELECTRIC DUCT HEATER
	GATE (SHUT-OFF) VALVE
	BUTTERFLY VALVE
	PLUG (BLALANCING) VALVE
	CHECK VALVE
	STRAINER WITH FOOT VALVE
	FLEXIBLE PIPE CONNECTION
	THERMOMETER
	PRESSURE GUAGE WITH GUAGE COCK
D	SMOKE DETECTOR
SF	COMBINATION SMOKE/FIRE DAMPER
FD	FIRE DAMPER
T	THERMOSTAT WITH WARMER/COOLER DIAL AND TEMPERATURE SENSOR TO EMCS
TS	ROOM TEMPERATURE SENSOR TO EMCS
HS	ROOM HUMIDITY SENSOR TO EMCS
EMCS	ENERGY MANAGEMENT CONTROL SYSTEM
MD	MOTORIZED DAMPER
VD	VOLUME DAMPER
FD (HT)	FIRE DAMPER, HIGH TEMPERATURE. FOR SMOKE EXHAUST DUCTWORK.

HVAC DESIGN REQUIRES:	YES	NO
DUCT SMOKE DETECTOR	X	
FIRE DAMPER(S)	X	
SMOKE DAMPER(S)	X	
FIRE RATED ENCLOSURE	X	
FIRE RATED ROOF/FLOOR CEILING ASSEMBLY	X	
FIRE STOPPING	X	
SMOKE CONTROL		X

REVISIONS:

KEY WEST CITY HALL
AT GLYNN ARCHER
1300 WHITE STREET KEY WEST, FLORIDA
CITY OF KEY WEST

EDWIN O. CERNA LICENSE No 69808 STATE OF FLORIDA PROFESSIONAL ENGINEER
EDWIN O. CERNA, P.E. (MECHANICAL)
FL REG. #0069808

M.E.P.FP. ENGINEER:
HNGS ENGINEERS
HUFSEY, NICOLAUDES, CARCIA, SUAREZ CONSULTING ENGINEERS
4800 S.W. 74th Court Miami, Florida 33155
(305) 270-9935 Fax (305) 666-5891
HNGS # 13-0016
ENRIQUE J. SUAREZ, P.E. (MECHANICAL) FL REG.#0035794
CARLOS GARCIA, P.E. (ELECTRICAL) FL REG.#0014334

410 Angela Street
Key West, Florida 33040
Telephone (305) 296-1347
Facsimilie (305) 296-2727
Florida License AAC002022
Bender & Associates ARCHITECTS p.a.

Project N.º 1305
MECHANICAL NOTES AND LEGEND
Date: 8/8/14

PERMIT SET

M4.0

FAN COIL UNITS SCHEDULE

UNIT TAG	FCU-1	FCU-2	FCU-3	FCU-4	FCU-5	FCU-6	FCU-7
AREA SERVED	BLDG B STAIR	BLDG A STAIR	Storage 154	Storage 155	Electrical 156	EMR 126	EMR 127
LOCATION	Ceiling	Ceiling	Ceiling	Ceiling	Ceiling	Ceiling	Ceiling
TOTAL AIR (CFM)	290	290	200	200	470	200	200
TOTAL O/A	0	0	-	-	85	-	-
FAN EXT. STATIC PRESSURE (In. Water)	0.20	0.20	.15	.15	0.3	.15	.15
FAN HP	1/10	1/10	1/30	1/30	1/10	1/30	1/30
ELECTRICAL CHAR.(V/P/Hz)	120/I/60	120/I/60	120/1/60	120/1/60	120/I/60	120/1/60	120/1/60
TOTAL COOLING CAP (BTU/HR)	14950	14950	6250	6250	12320	6250	6250
SENSIBLE COOLING CAP. (BTU/HR)	9390	9390	5030	5030	11110	5030	5030
ENTERING AIR TEMP. DB/WB	82/69	82/69	78/64	78/64	77/63	78/64	78/64
COOLING TYPE	CHW	CHW	CHW	CHW	CHW	CHW	CHW
COOLING GPM	3	3	1.2	1.2	2.4	1.2	1.2
CHILLED WATER TEMP. EWT/LWT	45/55	45/55	45/55	45/55	45/55	45/55	45/55
WATER PRESSURE DROP (FT)	4.3	4.3	3.96	3.96	9.4	3.96	3.96
COIL, ROWS/FPI	4/10	4/10	3/10	3/10	4/10	3/10	3/10
HEATING TYPE	-	-	-	-	-	-	-
SENSIBLE HEATING CAPACITY	-	-	-	-	-	-	-
HEATING GPM	-	-	-	-	-	-	-
HOT WATER TEMP. EWT/LWT	-	-	-	-	-	-	-
FLUID PRESSURE DROP (FT)	-	-	-	-	-	-	-
COIL, ROWS/FPI	-	-	-	-	-	-	-
MANUFACTURER	JCI	JCI	JCI	JCI	JCI	JCI	JCI
MODEL NUMBER	FHP-30	FHP-30	FHX-20	FHX-20	FNX-06	FHX-20	FHX-20
REMARKS	2,3,5,6,7,9	2,3,5,6,7,9	1,3,5,6,7	1,3,5,6,7	1,3,5,6,7	1,3,5,6,7	1,3,5,6,7

NOTES:
1- PROVIDE 2-WAY CONTROL VALVE
2- PROVIDE 3-WAY CONTROL VALVE
3- INCLUDE INTEGRAL FACTORY HIGH LEVEL CONDENSATE FLOAT SWITCH TO SHUT OFF UNIT
4- COORDINATE WITH FLOOR PLAN DRAWINGS FOR MOUNTING CONFIGURATION REQUIREMENTS
5- PROVIDE UNIT WITH STAINLESS STEEL DRAIN PAN, FOIL FACED INSULATION, 1" THROW AWAY FILTER, GALVANIZED STEEL CASING.
6- PROVIDE ETL LISTED UNIT.
7- PROVIDE PIPING PACKAGE, BALL VALVES WITH MEMORY STOP.
8- APPROVED ALTERNATE FOR JCI FAN COIL UNITS MODELS IS ENVIRO-TEC.
9- PROVIDE OPTIONAL TELESCOPING BOTTOM ACCESS PANEL FOR FULLY RECESSING THE UNIT INTO THE CEILING PLENUM

AIR COOLED - CHILLER SCHEDULE

UNIT NO.	TONS NOM.	TYPE	EVAPORATOR GPM	EVAPORATOR MIN. GPM	EVAPORATOR PRESS. DROP FT-H2O	EVAPORATOR FOULING FACTOR	EVAPORATOR WATER °F ENT/LVG	CONDENSER AMBIENT °F	CONDENSER FANS QTY.	CONDENSER FLA/ FAN (TOTAL)	COMPRESSORS QTY.	COMPRESSORS COMPR. EACH/RLA	COMPRESSORS UNLOADING TOTAL	ELECTRICAL VOLTAGE /PHASE	ELECTRICAL # POWER CONNECT	ELECTRICAL MIN. CIRCUIT AMPS	ELECTRICAL MAX. FUSE AMPS	MANUFACTURER AND MODEL NUMBER	EER
CH-1	84.3	AIR COOLED-SCROLL	185.8	100	6	0.0001	54.9/44	95	4	60.8	5	(4)@56 &(1)@110	MULTIPLE STEPS	208/3	SINGLE POINT	391	450	YLAA0090SE17XCBSDTX	9.8
CH-2	84.3	AIR COOLED-SCROLL	185.8	100	6	0.0001	54.9/44	95	4	60.8	5	(4)@56 &(1)@110	MULTIPLE STEPS	208/3	SINGLE POINT	391	450	YLAA0090SE17XCBSDTX	9.8

NOTES:
1. PROVIDE UNIT WITH FACTORY APPLIED CORROSION PROTECTIVE COATING SUITABLE FOR MARINE ENVIRONMENT IN CONDENSER COILS AND EXTERIOR COMPONENTS.
2. PROVIDE JOHNSON CONTROLS & OPTIMIZATION PANEL.
3. PROVIDE SOUND REDUCTION PACKAGE.

PUMP SCHEDULE

PUMP NO.	SERVICE	LOCATION	GPM	HEAD FT.	DESIGN EFF	RPM	MOTOR HP	MOTOR VOLTS/ PHASE	PUMP WEIGHT (lbs)	TYPE	NPSHR	MANUFACTURER AND MODEL NUMBER	REMARKS
CHWP-1	CHILLED WATER PUMP	CHILLER PLANT	250	75	76	3600	7.5	208/3	300	INLINE	–	ARMSTRONG SERIES 4300 IVS 3x3x6 SENSORLESS	1 2 3 4 5
CHWP-2	CHILLED WATER PUMP	CHILLER PLANT	250	75	76	3600	7.5	208/3	300	INLINE	–	ARMSTRONG SERIES 4300 IVS 3x3x6 SENSORLESS	1 2 3 4 5

1 – PROVIDE ON THE DISCHARGE SIDE OF EACH PUMP AN ARMSTRONG MODEL FTV FLO-TREX COMBINATION VALVE, OR EQUAL, CAPABLE OF TIGHT SHUT-OFF, SILENT NON-SLAM CHECK AND FLOW MEASUREMENT/THROTTLING.

2 – PROVIDE ON THE SUCTION OF EACH PUMP AND ARMSTRONG SUCTION GUIDE OR EQUAL, WITH CAST IRON BODY, OUTLET GUIDE VANES, REMOVABLE STAINLESS STEEL STRAINER AND FINE MESH START UP STRAINER

3 – PROVIDE PUMP WITH INTEGRATED MOTOR MOUNTED VARIABLE FREQUENCY DRIVE WITH DISCONNECT SWITCH & BACNET MS/TP

4 – THESE PUMPS RUN NON-CONCURRENTLY AND ALTERNATE DUTY DAILY.

5 – PROVIDE STAINLESS STEEL SHAFT.

AIR HANDLING UNIT SCHEDULE

UNIT NO. (AHU-)	AREA SERVED	UNIT LOCATION	ELECT. SERVICE	FAN HP	AIR TOTAL AIR CFM	AIR VENT AIR CFM	AIR COOLING CAP TOTAL	AIR COOLING SENSIBLE	AIR ENT. AIR FDB/FWB	AIR LVG. AIR FDB/FWB	AIR S.P.(IN WG.) FILTER (S)	AIR S.P.(IN WG.) EXT.	WATER TEMP. F ENT./LVG.	WATER GPM	WATER PRESS. DROP FT H2O	COOLING COIL FACE AREA SQ.FT.	COOLING COIL FACE VELOCITY FT/MIN	COOLING COIL ROWS/ FINS PER IN	HEATING COIL HEATING ENT/LVG. AIR	HEATING COIL REHEAT ENT/LVG. AIR	HEATING COIL KW/STEPS	HEATING COIL ELECT. SVC.	MANUFACTURER AND MODEL NUMBER	REMARKS
AHU-1B	WING B	MECH RM 248	208V/3PH	25	15550	1660	603	445	78.8/64.8	52.4/51.2	0.50	3	44/54	120.8	9.5	31.1	500	6/12	–		–	–	YORK SOLUTIONS 75x81	1 2 3 4 6
AHU-2A	WING A	MECH RM 214	208V/3PH	25	15000	1500	577.6	473	79.0/64.9	54.5/51.7	0.50	3	44/54	116.0	9.5	31.1	473	6/8	–		–	–	YORK SOLUTIONS 57x108	1 2 3 4 6
AHU-3	AUDITORIUM	MECH RM 218	208V/3PH	10	5500	1200	241.7	165.4	80.6/66.8	52.7/51.8	0.50	3	44/54	47.9	7.3	11.5	478	6/12	–		–	–	YORK SOLUTIONS 36x72	1 2 3 4 5

1 2" DOUBLE WALL CONSTRUCTION, MINIMUM R-13 INSULATION, SS DRAIN PAN, 6" PERIMETER BASE RAIL, FAN INTERNALLY ISOLATED BY 2" SPRINGS.
2 PROVIDE FILTER/MIXING BOX SECTION FOR O/A AND R/A CONNECTIONS AND 80% 1" PAD FILTERS (INCLUDE 2" FILTER FRAME/HOLDER)
3 PROVIDE VARIABLE FREQUENCY DRIVE WITH MAIN CKT. BREAKER FOR VAV APPLICATION. (VFD MANUFACTURER ABB WITH BY-PASS)
4 PROVIDE ANGLE FILTER SECTION FOR 80% 1" PAD FILTER (INCLUDE 2" FILTER FRAME/HOLDER).
5 PROVIDE DUCT MOUNTED SMOKE DETECTORS ON MAIN SUPPLY AIR DUCT.
6 PROVIDE DUCT MOUNTED SMOKE DETECTORS ON MAIN SUPPLY AND RETURN AIR DUCTS.

NOTES: ALL AHU'S TO BE MOUNTED ON 4" HIGH REINFORCED HOUSEKEEPING PAD, PROVIDE VIBRATION ISOLATION AT EACH UNIT CORNER, FLEXIBLE CONNECTIONS (COLLARS) TO S/A & R/A DUCT CONNECTING TO UNIT

SILENCER SCHEDULE

Tag	Qty	Fan System	Face Dimension W (in)	Face Dimension H (in)	Length (in)	Flow cfm	Velocity ft/min	Silencer P.D.* in wg	P.D. Incl. System Effects in wg	Dynamic Insertion Loss 63	125	250	500	1000	2000	4000	8000	Vibro-Acoustics Model	Notes
SA-1B	1		16	50	120	8850	1593	0.16	0.25	9	18	18	32	43	36	26	26	TRED-UHV-FX	1,2
Custom built transitional elbow silencer; INLET: 20x60: OUTLET 16x50; Casing to be HTL equivalent to 10 gauge duct w all to control breakout.																			
SA-1A	1		16	38	120	6700	1587	0.16	0.31	9	18	18	32	43	36	26	26	TRED-UHV-FX	1,2
Custom built transtional elbow silencer: INLET 38x16; OUTLET 16x38 (see 3D sketch)																			
RA-1B	1		16	60	144	7620	-1143	0.2	0.3	8	21	27	45	40	39	36	24	RED-UHV-F8	1,2
Casing to be HTL equivalent to 8 gauge duct w all to control breakout.																			
RA-1A	1		20(32)	50(70)	144	7620	-1097	0.22	0.34	20	26	45	43	51	39	31	28	EX-TRELP-MV-FX	1,2
Custom built elbow silencer transitional elbow silencer w ith RLP; INLET 20(32)x50(70); OUTLET 50x20(70)																			
RA-3	1		16	50	96	5500	-990	0.12	0.26	8	13	22	29	39	38	31	23	RED-3P-UHV-FX	1,2
Custom built 3 plane silencer																			
SA-3	1		16	40	60	5500	1237	0.19	0.25	5	7	12	18	29	35	23	20	TRED-UHV-FX	1,2
Custom built transitional elbow silencer; INLET 59x10; OUTLET 16x40; Casing to be HTL equivalent to 12 gauge duct w all to control breakout.																			
SA-2A	1		18	34	144	7500	1765	0.19	0.23	12	26	23	34	47	35	22	25	3D-TEE-UHV-FX	1,2
Custom built 3D TEE shape silencer: INLET 38x26; OUTLET 1:18x34(42); OUTLET 2: 18(30)x36(51)																			
RA-2B	1		22(24)	50	144	7500	982	0.07	0.16	12	25	20	33	44	35	26	25	EXTRED-HV-FX	1,2
Custom built transitional elbow silencer c/w EX casing; INLET 22(24)x50(86); OUTLET 17(24)x86; Casing to be HTL equivalent to 8 gauge duct w all to control breakout.																			
RA-2A	1		20	60	108	7500	-900	0.07	0.13	8	15	26	30	38	38	34	22	TRED-UHV-FX	1,2
Custom built transtional elbow silencer: INLET 20x60; OUTLET 90x20																			

1 Contractor/Silencer manufacturuer must provide pressure drop calcualtions with PE stamp to demonstrate the pressure drop including system < 0.34" W.G. during submittal review
2 Alternate silencer manufacturer must provide silencer internal geometry for mechanical engineer and acoustician's approval during submittal review

FAN SCHEDULE

FAN No.	AREA SERVICE	LOCATION	TYPE	FAN RPM	CFM	STATIC PRESS	TYPE DRIVE	MOTOR H.P.	MOTOR ELECTRIC CHARACT. VOLTS/PH	MANUFACTURER & MODEL No.	WEIGHT LBS.	SONES	REMARKS (ACCESORIES, SEE NOTES)
EF-1	BLDG WING B	ROOF	EXHAUST	1256	1500	1"	DIRECT	0.75	120/ I	COOK 150C13D	87	12.5	1 3 6 7 14 52 55
EF-2	BLDG WING A	ROOF	EXHAUST	1240	1350	1"	DIRECT	0.75	120/ I	COOK 150C13D	87	12.1	1 3 6 7 14 52 55
EF-3	AUDITORIUM	ROOF	EXHAUST	1465	1100	0.75"	DIRECT	0.25	120/ I	COOK 120C15D	67	10.1	1 3 6 7 14 52 55
EF	ELEV. MACH. RMS.	CEILING	EXHAUST	655	50	0.25"	DIRECT	42W	120/ I	COOK GC-124	13	1	1 3 14
EF	ELEV. MACH. RMS.	CEILING	EXHAUST	655	50	0.25"	DIRECT	42W	120/ I	COOK GC-124	13	1	1 3 14
OAI	OUTSIDE AIR INTAKE	ROOF	GRAVITY VENTILATOR	–	–	0.25"	–	–	–	COOK 16 TR	13	1	1 3 6 8

1 DISCONNECT SWITCH 2 THERMOSTAT 3 AUTOMATIC BACKDRAFT DAMPER 4 FAN GUARD 5 SPRING VIBRATION 6 ROOF CURB 7 EPOXY COATED 8 BIRDSCREEN
9 ALUMINUM LOUVER W/BIRDSCREEN 10 ADJUSTABLE BELT DRIVE OSHA MOTOR SIDEGUARD WITH PERMA-TECTOR 11 INLET GUARD 12 WEATHERHOOD 13 MOTORIZED DAMPER
14 SOLID STATE SPEED CONTROL 15 WEATHERPROOF ENCLOSURE 16 DIRECT DRIVE MOTOR COVER 17 MOTOR COVER/BELT GUARD 18 DRAIN CONNECTION 19 WALL HOUSING 20 UL LISTED
21 DUCT ADAPTOR 22 ADJUSTABLE SHEAVE 23 DISCHARGE GUARD 24 ARCHITECTURAL LOUVER 25 VARIABLE FREQUENCY DRIVE 26 MFRER'S. INLET BELL W/MESH SCREEN
27 HANGING VIBRATION ISOLATORS 28 HOT DIPPED GALVANIZED OUTER HOUSING. 29 INTEGRAL WALL BRACKET. 50 2-SPEED ADJUSTABLE MOTOR 51 WALL CAP
52 INTERLOCK TO START,STOP WITH A/C SERVING SAME SPACE 53 UPBLAST CONFIGURATION WITH BUTTERFLY DAMPER AND MOTORIZED HOLD-DOWNS 54 DOOR OPERATED SWITCH
55 MONITOR THE STATUS OF FAN WITH BMS 56 ALUMINUM MOUNTING STAND WITH MIAMI DADE CO. APPROVAL 57 UL LISTED FOR GREASE EXHAUST APPLICATION. 58 HINGED ACCESS AND GREASE TRAP
59 INTEGRAL CEILING GRILLE

COMPUTER ROOM AIR COOLED A/C UNIT SCHEDULE

INDOOR UNIT NO.	COOLING CAPACITY TOTAL	COOLING CAPACITY SENSIBLE	ENT. AIR FDB/FWB	INDOOR FAN H.P.	OUTDOOR FAN H.P.	TOTAL AIR CFM	AMBIENT AIR FDB	VOLT/ PHASE	FULL LOAD AMPS/ MAX FUSE SIZE INDOOR UNIT	MANUFACTURER AND MODEL NUMBER	OUTDOOR UNIT NO.	FULL LOAD AMPS/ MAX FUSE SIZE OUTDOOR UNIT	MANUFACTURER AND MODEL NUMBER	REMARKS
CRAC-1	58200	47800	75/62.5	1-1/2	0.75	2000	95	208/3	58.6/80	DATA AIRE DTAU-0532	CU-1	4.3/15	DATA AIRE DARC-0532	
CRAC-2	58200	47800	75/62.5	1-1/2	0.75	2000	95	208/3	58.6/80	DATA AIRE DTAU-0532	CU-2	4.3/15	DATA AIRE DARC-0532	
CRAC-3	58200	47800	75/62.5	1-1/2	0.75	2000	95	208/3	58.6/80	DATA AIRE DTAU-0532	CU-3	4.3/15	DATA AIRE DARC-0532	

NOTES:

PROVIDE UNIT WITH:
- INTERNAL HUMIDIFIER AND AND REMOTE HUMIDIFIER CONTACT.
- ELECTRIC REHEAT/STEAM HUMIDIFIER.
- FILTER CLOG, SMOKE DETECTOR.
- COATED COILS FOR CONDENSING UNIT IN MARINE ENVIRONMENT.
- NON-FUSED DISCONNECT SWITCH FOR BOTH UNITS

OTHER EQUIPMENT:
- Data Aire DARA-4 SEQUENCING PANEL WITH WEB BASED MONITORING CAPABILITIES

GENERAL NOTES:

1. OUTDOOR CONDENSER TO BE CONSTRUCTED OF HEAVY GAUGE ALUMINUM. ALL INTERIOR COMPONENTS MUST BE NON-CORROSIVE. PROVIDE OUDOOR UNIT WITH HERESITE PROTECTIVE COATING.

2. VERIFY REFRIGERANT LINES SIZES AND DISTANCE WITH MANUFACTURER.

3. PROVIDE CAPABILITIES TO MONITOR UNITS FROM BUILDING MANAGEMENT SYSTEM.

PERMIT SET

REVISIONS:

KEY WEST CITY HALL
AT GLYNN ARCHER
1300 WHITE STREET KEY WEST, FLORIDA
CITY OF KEY WEST

EDWIN O. CERIA LICENSE No 69808 STATE OF FLORIDA PROFESSIONAL ENGINEER
EDWIN O. CERIA P.E. (MECHANICAL)
FL REG. #0069808

M.E.P.FP. ENGINEER:
HNAGS ENGINEERS
HUFSEY, NICOLAIDES, GARCIA , SUAREZ CONSULTING ENGINEERS
4800 S.W. 74th Court Miami, Florida 33155
(305) 270-9935 Fax (305) 666-5691
HNGS # 13-0016
ENRIQUE J. SUAREZ, P.E. (MECHANICAL) FL REG.#0035794
CARLOS GARCIA, P.E. (ELECTRICAL) FL REG.#0014154

410 Angela Street
Key West, Florida 33040
Telephone (305) 296-1347
Facsimilie (305) 296-2727
Florida License AAC002022
Bender & Associates ARCHITECTS p.a.

Project N° 1305
MECHANICAL SCHEDULES
Date: 8/8/14

M4.1

OUTSIDE AIR CALCULATIONS
(per ASHRAE 62.1 - 2007)

DRAWING	Description	O/A Mechanical ID system used for Ventilation	Area (ft²) (Az)	Area Outdoor Air Rate per ASHRAE 62.1 2007 (Table 6-1) (Ra)	Area Outdoor Air (RaAz)	Occupancy (Pz)	Occupant Outdoor Air Rate per ASHRAE 62.1 2007 (TABLE 6-1) (Rp)	Occupant Outdoor Air (RpPz)	Breathing Zone Outdoor Air (Vbz=RpPz + RaAz)	Zone Air Distribution Effectiveness ASHRAE 62.1 2007 Table 6-2 (Ez)	Required Outdoor Air (Voz = Vbz/Ez)	Provided Outside Air
M2.1A & M2.2A	Office Areas	AHU-2A	7331	0.06	440	70	5	350	790	1	790	920
M2.1A & M2.2A	Conference Rooms	AHU-2A	2273	0.06	137	35	5	175	312	1	312	350
M2.1A & M2.2A	Storage Rooms	AHU-2A	392	0.12	48	0	0	0	48	1	48	50
M2.1A & M2.2A	Mechanical Rooms	AHU-2A	413	0.06	25	0	0	0	25	1	25	30
M2.1A & M2.2A	Corridors	AHU-2A	1904	0.06	115	0	0	0	115	1	115	150
TOTAL O/A PROVIDED BY AIR HANDLER UNIT AHU-2A											**1290**	**1500**
M2.1A & M2.2A	Auditorium	AHU-3	3588	0.06	216	186	5	930	1146	1	1146	1170
M2.1A & M2.2A	Office	AHU-3	100	0.06	6	1	5	5	11	1	11	20
M2.1A & M2.2A	Mechanical	AHU-3	74	0.06	5	0	0	0	5	1	5	10
TOTAL O/A PROVIDED BY AIR HANDLER UNIT AHU-3											**1162**	**1200**
M2.1B & M2.2B	Office Areas	AHU-1B	10620	0.06	638	90	5	450	1088	1	1088	1300
M2.1B & M2.2B	Conference Rooms	AHU-1B	916	0.06	55	26	5	130	185	1	185	240
M2.1B & M2.2B	Storage Rooms	AHU-1B	414	0.12	50	0	0	0	50	1	50	50
M2.1B & M2.2B	Mechanical Rooms	AHU-1B	285	0.06	18	0	0	0	18	1	18	20
M2.1B & M2.2B	Corridors	AHU-1B	778	0.06	47	0	0	0	47	1	47	50
TOTAL O/A PROVIDED BY AIR HANDLER UNIT AHU-1B											**1388**	**1660**

REVISIONS:

KEY WEST CITY HALL
AT GLYNN ARCHER
1300 WHITE STREET KEY WEST, FLORIDA
CITY OF KEY WEST

EDWIN O. CERIA
LICENSE
No 69808
STATE OF FLORIDA
PROFESSIONAL ENGINEER

EDWIN O. CERIA, P.E. (MECHANICAL)
FL REG. #0069808

M.E.P.FP. ENGINEER:

HNAGS ENGINEERS

HUFSEY, NICOLAIDES, GARCIA , SUAREZ CONSULTING ENGINEERS
4800 S.W. 74th Court Miami, Florida 33155
(305) 270-9935 Fax (305) 666-5691
HNGS # 13-0016

ENRIQUE J. SUAREZ, P.E. (MECHANICAL)
FL REG.#0015794

CARLOS GARCIA, P.E. (ELECTRICAL)
FL REG.#0014104

410 Angela Street
Key West, Florida 33040
Telephone (305) 296-1347
Facsimilie (305) 296-2727
Florida License AAC002022

Bender & Associates ARCHITECTS p.a.

Project N º 1305

MECHANICAL SCHEDULES

Date: 8/8/14

PERMIT SET

M4.1A

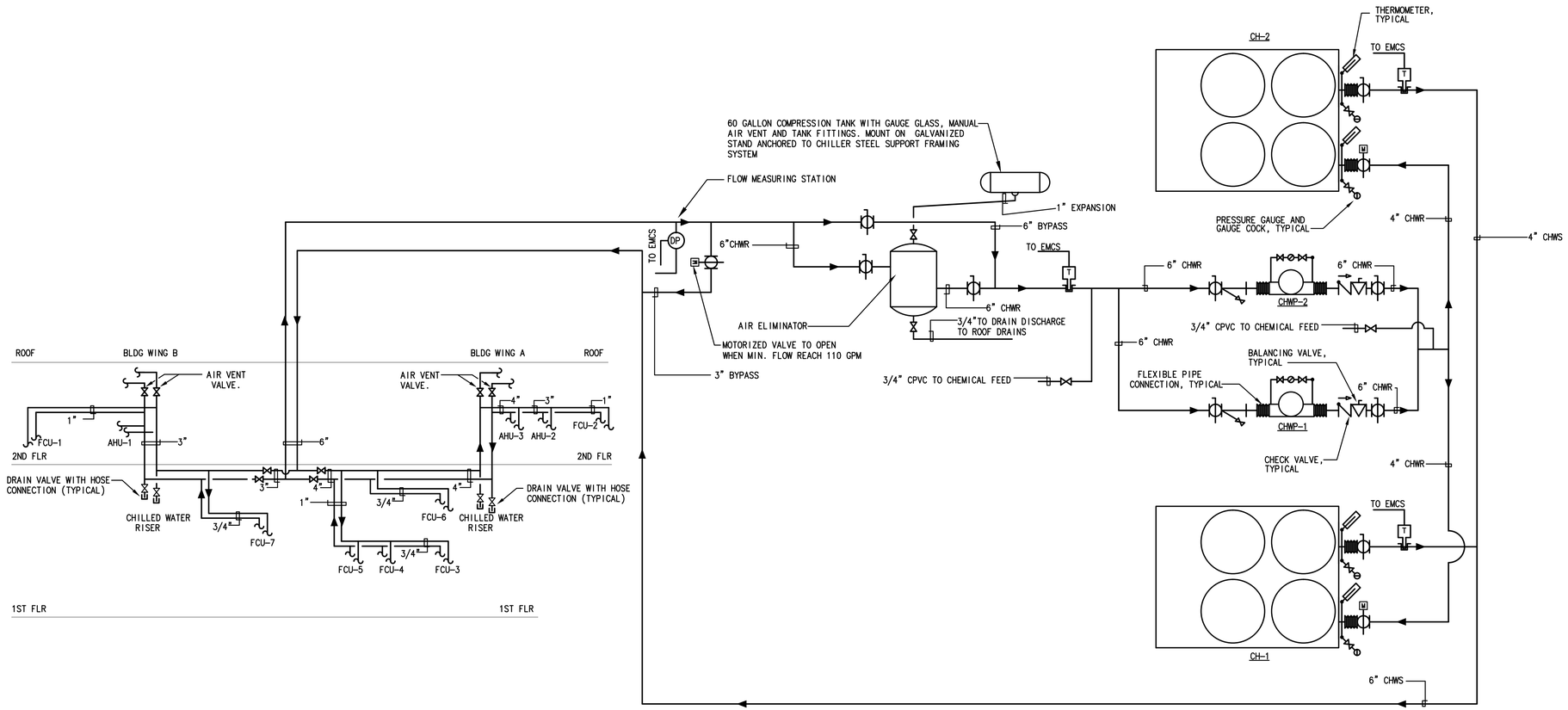

CHILLER CHILLED WATER FLOW DIAGRAM

N.T.S.

REVISIONS:

KEY WEST CITY HALL AT GLYNN ARCHER

1300 WHITE STREET KEY WEST, FLORIDA

CITY OF KEY WEST

EDWIN O. CERNA LICENSE No 69808 STATE OF FLORIDA PROFESSIONAL ENGINEER

EDWIN O. CERNA, P.E. (MECHANICAL)
FL REG. #0069808

M.E.P.FP. ENGINEER:

HNGS ENGINEERS

HUFSEY, NICOLAIDES, GARCIA , SUAREZ
CONSULTING ENGINEERS
4800 S.W. 74th Court Miami, Florida 33155
(305) 270-9935 Fax (305) 666-5891
HNGS # 13-0016
☐ ENRIQUE J. SUAREZ, P.E. (MECHANICAL)
FL REG.#0053794
☐ CARLOS GARCIA, P.E. (ELECTRICAL)
FL REG.#0014104

410 Angela Street
Key West, Florida 33040
Telephone (305) 296-1347
Facsimilie (305) 296-2727
Florida License AAC002022

Bender & Associates ARCHITECTS p.a.

Project N° 1305

CHILLED WATER SYSTEM DIAGRAM

Date: 8/8/14

PERMIT SET

M4.2

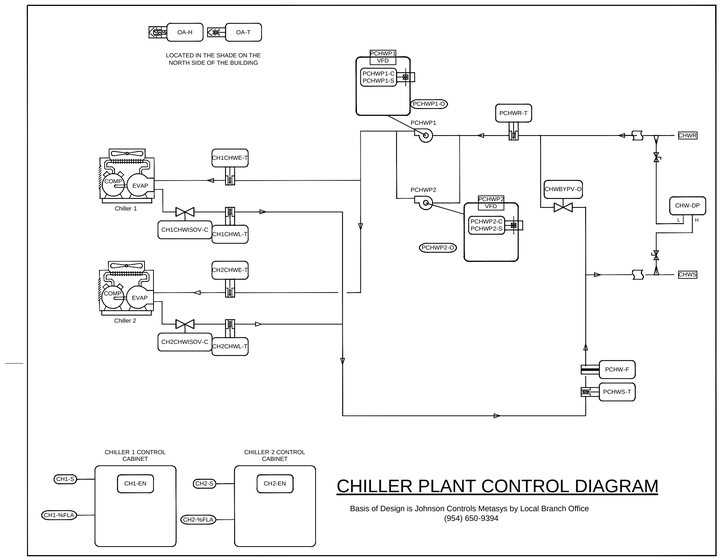

CHILLER PLANT CONTROL DIAGRAM

Basis of Design is Johnson Controls Metasys by Local Branch Office
(954) 650-9394

OPTIMIZED PERFORMANCE AIR COOLED CHILLER PLANT

CHILLER PLANT ENABLE/DISABLE:

The chiller plant shall be enabled and disabled either manually by an operator command (SYSTEM-EN) or automatically through the FMS. In automatic mode, the FMS shall enable the chiller plant whenever the outdoor air dry-bulb temperature (OA-T) exceeds the chiller plant enable setpoint (CLGOATLOCKOUT-SP), and disable the chiller plant when the outdoor air dry-bulb temperature (OA-T) is less than the chiller plant enable setpoint (CLGOATLOCKOUT-SP) minus a differential (4 deg F). When the chiller plant is disabled, all devices shall be commanded off. All isolation valves shall close. The CHW bypass valve (CHWBPYV-O) shall open.

CHILLER CONTROL:

The CPO application is designed to maximize the chiller plant's operating efficiency. This application when enabled, maintains at least one device on (to maintain the minimum or base load defaulted to 0.1 tons), determines the percent load of the system and maximizes the plant efficiency by choosing the most efficient device (or combination of devices) available to meet the required load. The selected combination produces the largest adjusted efficiency. Efficiencies are calculated based on the individual device's coefficient of performance (COP), percent load, required capacity, and rated flow. The chiller plant load uses a capacity calculation based on percent full loads amps (CHx%-FLA). The percent full load amps of the device is used with the device operating capacity to calculate each device load (in tons), and then added to the other devices running to determine the current chiller plant capacity (CHLR-AMPS-TOT). This current chiller plant capacity is compared with the total chiller plant capacity to determine the percentage of total chiller plant available. The chillers (CHx-EN) shall be controlled via their own internal controls to maintain a chilled water supply temperature (PCHWS-T). The chilled water (CHW) system consists of two, constant speed driven, chillers. Each chiller shall be equipped with a 2-position chill water isolation valve (CHxCHWISOV-C). The chillers, operating order shall be determined by, equalization of run-time. The CPO program shall totalize run-hours for each chiller (CHx-RUNTIME) and adjust the operating order. If a device failure is detected (CHLR x-Enabled) or becomes unavailable for maintenance (CHx-MS), it will be shut down in an orderly manner and the next available device in the sequence shall be started.

PRIMARY CHILLED WATER PUMP CONTROL:

The CPO application is designed to maximize the pumping efficiency by, choosing the most efficient pump (or combination of pumps) available. In general, when enabled, the application determines the combination that best meets the requirements and turns on/off the appropriate pumps (PCHWPx-C) in an orderly manner to arrive at the desired combination. The best combination produces the largest adjusted efficiency. Efficiencies are calculated based on the device efficiency, percent load, required capacity and rated flow. The required flow (current load) can be determined based on the affinity law of the pumps, which states that the current flow produced by a pump is directly proportional to it's speed. Therefore the CPO application uses the speed (PCHWPx-O) of the currently operating pumps (for single value, all pumps run at the same speed), this required flow is then used to compare the various combination options available. The application determines the combination of pumps that provides this flow at the highest adjusted efficiency. The new combination, which is based off individual pump efficiencies, obeys the rules regarding valid device combinations, and provides the highest adjusted efficiency. There are two variable speed driven, primary CHW pumps piped to a common header, so that any CHW pump shall be capable of running with any chiller. The CHW system is piped in a variable primary flow configuration, with a 2-way, CHW bypass valve (CHWBYPV-O) across the chillers and pumps to maintain minimum flow (PCHW-F) through the operating chillers. The CHW pumps, operating order shall be determined by, equalization of run-time. The CPO program shall totalize run-hours for each CHW pump (PCHWP x-Runtime) and adjust the operating order. If a device failure is detected (PCHWP x-Enabled) or becomes unavailable for maintenance (PCHWPx-LO), it will be shut down in an orderly manner and the next available device in the sequence shall be started.

PRIMARY CHILL WATER LOOP PRESSURE CONTROL:

The CHW pump speed (PCHWPx-O) shall be controlled to maintain the specified Building-Loop differential pressure setpoint (CHWDP-SP) as recommended by the balancing contractor. Building-Loop differential-pressure (CHW-DP) error shall be taken into account, when adding pumps. To insure stable system flow, the rate at which CHW pump speed may change shall be limited to 10% per minute (adj.).

INITIAL CHILLER START-UP:

The following sequence applies to the specific case when the CPO needs to start the first chiller.

- Command isolation valves to fully open position.
- Once valve positions have been proven fully open, command corresponding pump to start.
- Prove pump running status. After a 60 second (adj.) Stabilization delay, command 1st chiller to start.

ADDING ADDITIONAL CHILLERS:

The minimum number of CSD-driven chillers will operate. Additional chillers will only be added when the existing chillers are operating at or exceeding maximum design capacity. Maximum capacity will be calculated in real time based on the entering CHW temperature and setpoint using manufacturer's data for the specific model of installed chillers. Or - if the flow rate through the chiller exceeds it's maximum value (as recommended by the chiller manufacturer) for an adjustable period (typ. 20 minutes).

- After an adjustable period (typ. 1 minute), the next available CHW pump, if needed, and CW pump shall be commanded to start.
- Once the status of the pumps has been proven, the respective CHW isolation valves shall be commanded to open. The CHW valve shall be commanded to open slowly, over 90 seconds (adj.) to avoid nuisance trips of operating chillers. After the valve positions are verified open, the chiller shall be commanded to start. The operating chillers' current-limit-setpoints shall be released, allowing them to load-up as required.
- Once the status of the pumps has been proven, the chiller shall be commanded to start. The operating chillers' current-limit-setpoints shall be released, allowing them to load-up as required.

STOPPING ADDITIONAL CHILLERS AND CHILLER PLANT SHUTDOWN:

The FMS shall modulate the CHW bypass valve to insure minimum flow through the operating chillers. This is accomplished by measuring the system flow to the building and using this as input to a feedback control algorithm which modulates the position of the CHW bypass valve. Whereby, the desired bypass flow is equal to the sum of the minimum chilled water flow rates for each operating chiller minus the measured flow out to the building. If this calculated value is less than zero then the bypass valve should be fully closed. The default chiller minimum flow rate is 0.3 (adj.) Times the design flow rate (check with the chiller manufacturer for actual minimum flow for each evaporator barrel). The chiller shall receive a stop command, and the CHW pumps will continue to run for an additional 2 minutes (adj.). After the 2 min. Period expires, the CHW pump, if needed, with the highest operator ranking or run-time shall be shutdown.

ADDITIONAL POINTS MONITORED BY THE FMS:

- Chiller n Status (CHn-S)
- Chiller n Leaving Water Temperature (CHnCHWL-T)
- Chiller n Entering Water Temperature (CHnCHWE-T)
- Primary Supply Temperature (PCHWS-T)
- Primary Return Temperature (PCHWR-T)
- Outdoor Air Temperature (OA-T)
- Outdoor Air Humidity (OA-H)

VAV TERMINAL UNIT CONTROL DIAGRAM

Basis of Design is Johnson Controls Metasys by Local Branch Office
(954) 650-9394

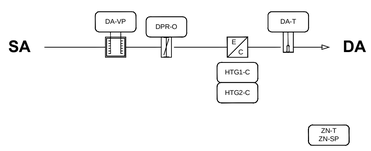

OCCUPIED MODE:
When the zone temperature (ZN-T) is between the occupied heating (EFFHTG-SP) and cooling (EFFCLG-SP) setpoints (inside of the bias), the primary air damper (DPR-O) will be at the minimum CFM (SA-F) and there will be no mechanical heating. On a rise in zone temperature (ZN-T) above the cooling setpoint (EFFCLG-SP), the primary air damper (DPR-O) will increase the CFM (SA-F) and there will be no mechanical heating. On a drop in zone temperature (ZN-T) below the heating setpoint (EFFHTG-SP), the reheat coil will be used to maintain the zone temperature (ZN-T) and the damper (DPR-O) is controlled to provide a minimum CFM (SA-F).

UNOCCUPIED MODE:
When in this mode, while the zone temperature (ZN-T) is between the unoccupied heating (EFFHTG-SP) and cooling (EFFCLG-SP) setpoints (inside of the bias), the primary air damper (DPR-O) will be at the minimum CFM (SA-F) and there will be no mechanical heating. On a rise in zone temperature (ZN-T) above the unoccupied cooling setpoint (EFFCLG-SP), the primary air damper (DPR-O) will increase the CFM (SA-F) (if available) and there will be no mechanical heating. On a drop in zone temperature (ZN-T) below the unoccupied heating setpoint (EFFHTG-SP), the reheat coil will be used to maintain the zone temperature (ZN-T) and the primary air damper (DPR-O) will be at the minimum CFM (SA-F).

DISCHARGE AIR TEMP SENSOR:
A discharge air temp (DA-T) sensor is provided on each box for monitoring purposes.

UNIT ENABLE:
A network unit enable (UNITEN-MODE) signal will control the mode of the box.

NETWORK WARMUP/COOLDOWN:
Warm-up and Cooldown modes will be activated by a network command (WC-C). When the zone temperature (ZN-T) is below the effective heating setpoint (EFFHTG-SP), the box will use warm air flow, then reheat coil to maintain the zone temperature (ZN-T). When the box is satisfied the flow will remain at the warm-up minimum position until the warm command has been removed.

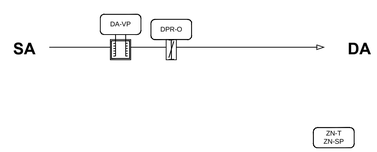

OCCUPIED MODE:
When the zone temperature (ZN-T) is below the cooling setpoint (EFFCLG-SP), the primary air damper (DPR-O) will be at the minimum CFM (SA-F). On a rise in zone temperature (ZN-T) above the cooling setpoint (EFFCLG-SP), the primary air damper (DPR-O) will increase the CFM (SA-F).

UNOCCUPIED MODE:
When in this mode, while the zone temperature (ZN-T) is between the unoccupied heating (EFFHTG-SP) and cooling (EFFCLG-SP) setpoints (inside of the bias), the primary air damper (DPR-O) will be at the minimum CFM (SA-F). On a rise in zone temperature (ZN-T) above the unoccupied cooling setpoint (EFFCLG-SP), the primary air damper (DPR-O) will increase the CFM (SA-F) (if available). On a drop in zone temperature (ZN-T) below the unoccupied heating setpoint (EFFHTG-SP), the primary air damper (DPR-O) will be at the minimum CFM (SA-F).

UNIT ENABLE:
A network unit enable (UNITEN-MODE) signal will control the mode of the box.

NETWORK WARMUP/COOLDOWN:
Warm-up and Cooldown modes will be activated by a network command (WC-C). When the zone temperature (ZN-T) is below the effective heating setpoint (EFFHTG-SP), the box will use warm air flow to maintain the zone temperature (ZN-T). When the box is satisfied the flow will remain at the warm-up minimum position until the warm command has been removed.

SPACE SENSORS
PROVIDE SPACE SENSORS WITH LCD DISPLAY AND ADJUSTABLE SET POINT (2°F +/- USER ADJUSTABLE).
THE LOCAL SPACE SENSOR SHALL MAINTAIN CONDITIONS WITHIN THE LOW AND HIGH LIMITS SET FROM THE BUILDING MANAGEMENT SYSTEM.

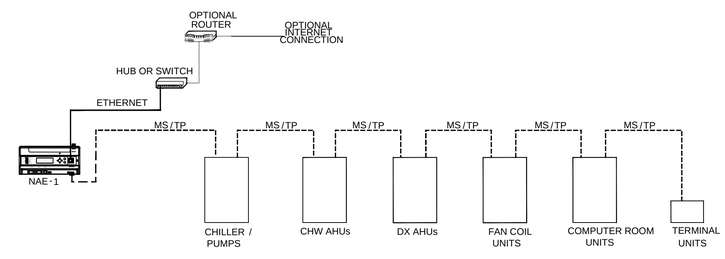

NETWORK RISER DIAGRAM

Basis of Design is Johnson Controls Metasys by Local Branch Office
(954) 650-9394

REVISIONS:

KEY WEST CITY HALL
AT GLYNN ARCHER
1300 WHITE STREET KEY WEST, FLORIDA
CITY OF KEY WEST

EDWIN O. CERNA LICENSE No 69808 STATE OF FLORIDA PROFESSIONAL ENGINEER
EDWIN O. CERNA, P.E. (MECHANICAL)
FL REG. #0069808

M.E.P.FP. ENGINEER:
HNAGS ENGINEERS
HUFSEY, NICOLAIDES, GARCIA , SUAREZ CONSULTING ENGINEERS
4800 S.W. 74th Court Miami, Florida 33155
(305) 270-9935 Fax (305) 666-5891
HNGS # 13-0016
ENRIQUE J. SUAREZ, P.E. (MECHANICAL) FL REG.#0015794
CARLOS GARCIA, P.E. (ELECTRICAL) FL REG.#0014104

410 Angela Street
Key West, Florida 33040
Telephone (305) 296-1347
Facsimilie (305) 296-2727
Florida license AAC002022
Bender & Associates ARCHITECTS p.a.

Project N° 1305
CONTROL DIAGRAMS
Date: 8/8/14

PERMIT SET

M4.3

DX HANDLING UNIT CONTROL DIAGRAM

Basis of Design is Johnson Controls Metasys by Local Branch Office
(954) 650-9394

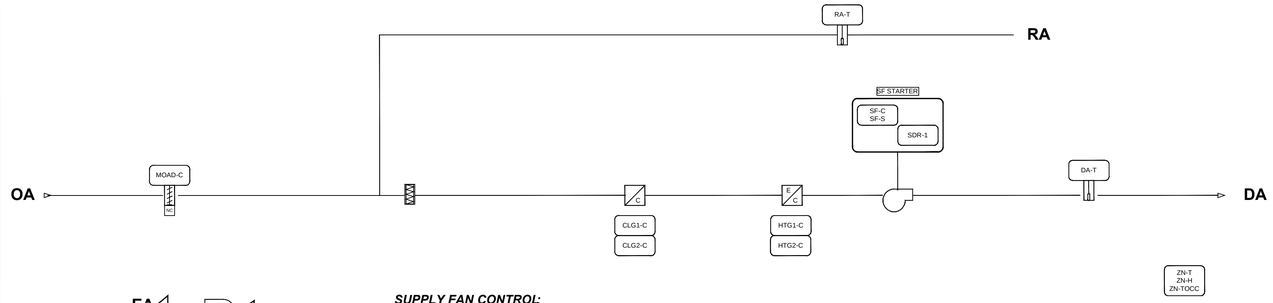

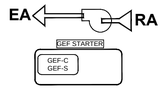

Safety Shutdown Relay Coil Wiring Detail

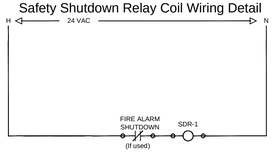

FOR WIRING OF SAFETY SHUTDOWN RELAY (SDR-N) CONTACTS, SEE DESIGNATION ON STARTER / VFD DETAIL.

SUPPLY FAN CONTROL:
The constant speed supply fan (SF-C) will be started based on occupancy schedule. When the supply fan status (SF-S) indicates the fan started, the control sequence will be enabled. Upon a loss of airflow (SF-S), the system will attempt to automatically restart until positive status is received.

EXHAUST FAN CONTROL:
The general exhaust fan (GEF-C) will run when the unit is operating in occupied mode. Upon a loss of general exhaust fan airflow (GEF-S), the general exhaust fan will attempt to automatically restart until positive status is received.

MINIMUM OA CONTROL:
The minimum OA (MOAD-C) damper will open when the unit is in occupied mode.

TEMPERATURE CONTROL:
The discharge air temperature setpoint (DAT-SP) will be reset as the zone temperature (ZN-T) changes.

COOLING COIL:
The cooling coil (CLGx-C) will be staged in sequence to maintain the temperature setpoint.

REHEAT COIL:
The reheat coil (HTGx-C) will be staged in sequence to maintain the temperature setpoint.

DEHUMIDIFICATION:
On a rise in the zone humidity (ZN-H), the cooling coil output will be overridden to maintain the zone humidity below the zone dehumidification setpoint (DEHUM-SP). The reheat control will maintain the temperature at setpoint.

POWER FAIL RESTART:
Upon power restoration, the unit restart shall be delayed(60 sec).

ADDITIONAL POINTS MONITORED BY THE FMS
- Return Air Temperature (RA-T)

VAV AIR HANDLING UNIT CONTROL DIAGRAM

Basis of Design is Johnson Controls Metasys by Local Branch Office
(954) 650 9394

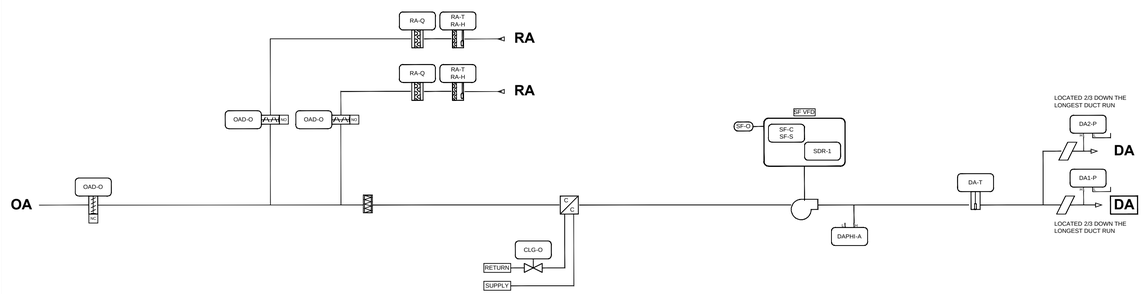

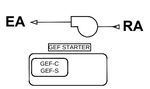

Safety Shutdown Relay Coil Wiring Detail

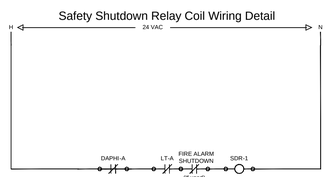

FOR WIRING OF SAFETY SHUTDOWN RELAY (SDR-N) CONTACTS, SEE DESIGNATION ON STARTER / VFD DETAIL.

SUPPLY FAN CONTROL:
The variable speed supply fan (SF-C) will be started based on occupancy schedule (OCC-SCHEDULE). When the supply fan status (SF-S) indicates the fan started, the control sequence will be enabled. The supply fan (SF-O) will modulate to maintain the discharge static pressure, as determined from the minimum of two duct static pressure sensors (DAx-P), at setpoint (DAP-SP). Upon a loss of airflow (SF-S), the system will attempt to automatically restart until positive status is received.

EXHAUST FAN CONTROL:
The general exhaust fan (GEF-C) will run when the unit is operating in occupied mode. Upon a loss of general exhaust fan airflow (GEF-S), the general exhaust fan will attempt to automatically restart until positive status is received.

OUTSIDE AIR AND RETURN AIR DAMPER CONTROL
The return air CO_2 sensor (RA-Q) will be used to reset the damper minimum position.

TEMPERATURE CONTROL:
The unit will control to maintain a constant discharge air temperature (DA-T).

COOLING COIL:
The cooling coil (CLG-O) will modulate to maintain the temperature setpoint. When the unit is shutdown, the cooling coil will be commanded to a preset position should the outdoor air temperature (OA-T) fall below the low outdoor air temperature setpoint (OALT-SP). Upon a loss of airflow (SF-S), the cooling coil will be off.

DEHUMIDIFICATION
On a rise in the return air humidity (RA-H), the cooling coil output will be overridden to maintain the return air humidity below the return air dehumidification setpoint (DEHUM-SP).

POWER FAIL RESTART:
Upon power restoration, the unit restart shall be delayed(60 sec).

ADDITIONAL POINTS MONITORED BY THE FMS
- Return Air Temperature (RA-T)

REVISIONS:

KEY WEST CITY HALL
AT GLYNN ARCHER
1300 WHITE STREET KEY WEST, FLORIDA
CITY OF KEY WEST

EDWIN O. CERNA LICENSE No 69808 STATE OF FLORIDA PROFESSIONAL ENGINEER
EDWIN O. CERNA, P.E. (MECHANICAL)
FL REG. #0069808

M.E.P.FP. ENGINEER:
HINGS ENGINEERS
HUFSEY, NICOLAIDES, GARCIA , SUAREZ CONSULTING ENGINEERS
2665 S. Bayshore Drive, PH-2B Coconut Grove, Miami, Florida 33155
(305) 270-9900 fax (305) 666-5891
HNGS # 13-0-0
☐ ENPF 13-0-0 (SUAREZ, P.E. (MECHANICAL) FL REG.#32027064
☐ CARLOS GARCIA, P.E. (ELECTRICAL) FL REG.#0014324

410 Angela Street
Key West, Florida 33040
Telephone (305) 296-1347
Facsimile (305) 296-2727
Florida License AAC002022
Bender & Associates ARCHITECTS p.a.

Project N° 1305
CONTROL DIAGRAMS
Date: 8/8/14

PERMIT SET

M4.4

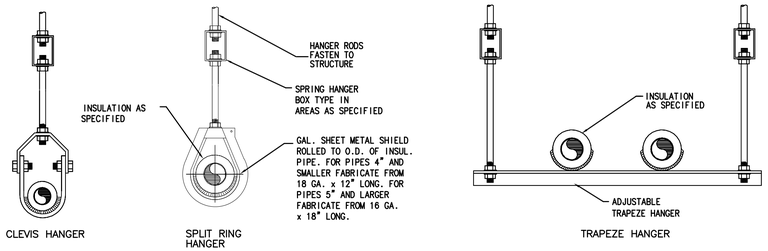

HANGER ROD SCHEDULE				HANGER ROD SPACING											
PIPE SIZE	ROD SIZE	PIPE SIZE	ROD SIZE	PIPE SIZE	1"	1-1/4"	1-1/2"	2"	2-1/2"	3"	4"	5"	6"	8"	10"	12"
UP TO 2"	3/8" DIA.	4" THRU 5"	5/8" DIA.	MAX ALLOWABLE SPACING	7 FT.	8 FT.	9 FT.	10 FT.	11 FT.	12 FT.	14 FT.	16 FT.	17 FT.	19 FT.	22 FT.	23 FT.
2 1/2" THRU 3"	1/2" DIA.	6" THRU 12"	7/8" DIA.	NOTE: FOR TRAPEZE HANGER TAKE SPACING OF SMALLEST PIPE ON TRAPEZE												

TYPICAL PIPE HANGER DETAILS (STEEL PIPING)
N.T.S.

Classified UL System

CAJ1205

2 HOUR FIRE RATED THROUGH PENETRATION FIRESTOP FOR SINGLE METAL PIPE THROUGH CONCRETE FLOORS OR BLOCK WALLS USING TREMSTOP ACRYLIC.

F-RATING = 2 HR.
T-RATING = 0 HR.

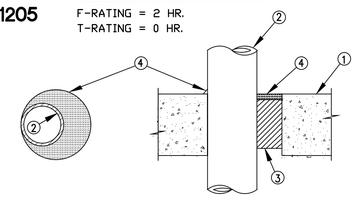

① PRE-RATED CONCRETE FLOORS OR BLOCK WALLS = MIN. 4-1/2" THICK, WITH ANNULAR SPACE RANGE OF 0" TO 7/8".

② STEEL PIPE – 4" DIA. (OR SMALLER) SCH. 40 (OR HEAVIER) STEEL.
CONDUIT – NOM. 4" DIA. (OR SMALLER) STEEL CONDUIT OR EMT.
COPPER PIPE – 3" DIA. (OR SMALLER) REGULAR (OR HEAVIER) COPPER.
CAST IRON PIPE – 4" DIA. (OR SMALLER) CAST OR DUCTILE IRON.
COPPER TUBING – 3" DIA. (OR SMALLER) TYPE L (OR HEAVIER) COPPER.

③ PACKING MATERIAL – MINERAL WOOL (MIN. 4 PCF) COMPRESSED MIN. 50% AND INSTALLED INTO THE OPENING TO OBTAIN MIN. 4" THICKNESS.

④ TREMSTOP ACRYLIC – MIN. 1/2" SEALANT APPLIED WITHIN ANNULUS, AND A MINIMUM 1/4" SEALANT APPLIED AT POINT CONTACT: AT THE FLOOR SURFACE FOR FLOORS, OR BOTH SURFACES FOR WALLS.

Classified UL System

WL1051

1 OR 2 HOUR FIRE RATED THROUGH PENETRATION FIRESTOP FOR SINGLE METAL PIPE THROUGH GYPSUM WALLS USING TREMSTOP WBM.

F-RATING = 1 AND 2 HR.
T-RATING = 0 AND 1/2 HR.

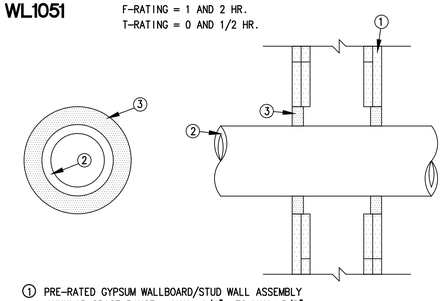

① PRE-RATED GYPSUM WALLBOARD/STUD WALL ASSEMBLY ANNULAR SPACE RANGE = MIN. 1/4" TO MAX. 5/8"

② STEEL PIPE – 8" DIAM. (OR SMALLER) SCH. 40 (OR HEAVIER) STEEL.
COPPER PIPE – 4" DIAM. (OR SMALLER) REGULAR (OR HEAVIER) COPPER PIPE.
CONDUIT – 4" DIAM. (OR SMALLER) EMT OR RIGID STEEL CONDUIT.

③ FYRE-SHIELD – MIN. 1/2" THICKNESS OF SEALANT INSTALLED WITHIN OPENING WITH A MIN. 1/4" CROWN AROUND THE PENETRATING ITEM APPLIED FLUSH WITH BOTH SIDES OF WALL ASSEMBLY.

FIRE STOPPING DETAILS
N.T.S.

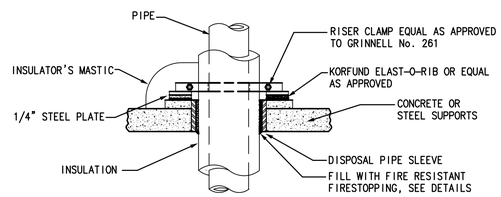

VERTICAL PIPING RISER DETAIL
N.T.S.

NOTE: CONDENSER WATER RISERS & NON-INSULATED RISERS SAME EXCEPT WITHOUT INSULATION & MASTIC BUT INCLUDING VIBRATION ISOLATION.

FIRE STOPPING DETAILS
N.T.S.

NOTE:
1. PROVIDE PLANED SQUARE ENDS PROJECTING 2" ABOVE THE FLOOR FOR ALL SLEEVES THROUGH FLOORS.

2. MAKE SLEEVES PASSING THROUGH WALLS OR BEAMS FLUSH WITH ADJACENT SIDES.

3. PROVIDE FIRESTOPPING COMPONENTS WHICH RELY ON PRODUCTS NOT EXCEEDING VOLATILE ORGANIC COMPOUND (VOC) CONTENT OF 250g/L AS REQUIRED BY SPECIFICATION 016116 – (VOC CONTENT RESTRICIONS) AND SCAQMD RULE 1168; FOR COMPLIANCE WITH LEED NC v2009 INDOOR ENVIRONMENTAL QUALITY CREDIT 4.1 – LOW EMITTING MATERIALS – ADHESIVES AND COATINGS.

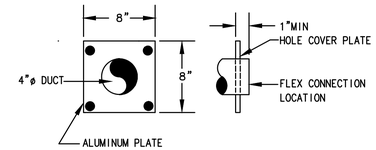

DRYER EXHAUST WALL CONNECTION DETAIL
N.T.S.

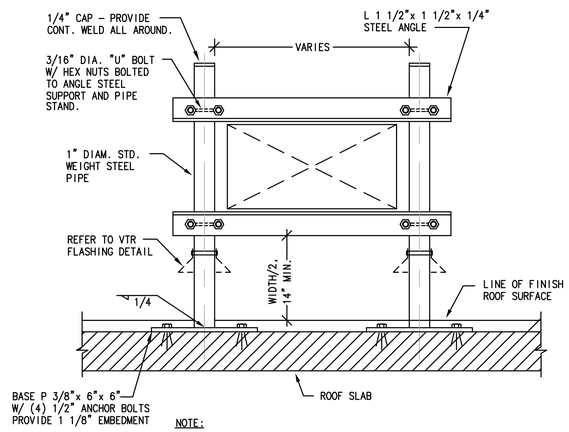

NOTE:
1. ALL STEEL TO BE HOT DIPPED GALVANIZED ***AFTER*** FABRICATION / CUTTING.
2. ALL HARDWARE SHALL BE HOT DIPPED GALVANIZED.
3. MAXIMUM STAND SPACING TO BE 6'-0"

SCHEDULE OF ISOLATED EQUIPMENT

Below is a schedule of isolated equipment for this project. Any equipment, system, construction, or condition that may be altered, added, or changed, or that is not specifically considered herein or on the Drawings, shall be treated in the same manner as specified for similar equipment, systems, or construction and shall comply with the noise and vibration isolation requirements of these Specifications.

	EQUIPMENT	BASE TYPE	ISOLATOR TYPE	DEFLECTION (Inches)
1.	Pumps-Less than 40HP(f)(g) CHMP-1,2	C	3	1.5
2.	Chiller CH-1,2 (f)(g)	A	4	2.0
3.	AHU-1,2,3 (b)	A	3	2.0
4.	Fan Powered VAV	A	2 or 2a	0.75
5.	Fans Inline and Mixed Flow	A	3 or 3b	1.5
6.	Piping and Ducts(g)	A	2,2a, 3 or 3b	N/A
7.	Transformers(d)	A	2 or 2a	0.25

BASE TYPE
A No base required, isolators directly attached to equipment
B Structural Steel Rails or Base
C Concrete Inertia Base

ISOLATOR TYPE	MASON INDUSTRIES EQUIVELENT
1 Neoprene Pad	Super W
2 Neoprene base mount type isolator	ND
2a rubber suspension type isolator	HD
3 base mount open spring isolator	SLF
3b Spring Hanger	HS
4: Restrained Spring Isolator:	SLR

Notes:

(a) Mount isolation between curb and fan.
(b) Mount isolation between fan housing and structure.
(c) Mount units on steel channel frame and suspend frame from structure.
(d) Mount floor-mounted transformers on concrete housekeeping pads.
(e) Select and employ cooling tower isolators in a manner which results in supporting the cooling tower in conformance with recommendations of the tower manufacturer.
(f) Provide Flexible Pipe Connectors as specified in 2.4.A above. Provide neoprene flexible pipe connectors with galvanized steel flanges. Select connectors with temperature and pressure ratings to suit intended service, without control rods. Shall be Mason type SFDEJ, or approved equal.
(g) Isolate piping in accordance with 3.1. above. Piping connected to isolated equipment shall be isolated as follows: At least the first 3 mounts or hangers shall be the same deflection as the isolated equipment, up to 2" deflection maximum Type 3 or 3b. All mounts or hangers in the equipment room or 50' from isolated equipment, whichever is greater, shall be at least 0.75" deflection Type 3 or 3b. All piping over 2" diameter and piping mounted or suspended below or near noise-sensitive areas shall be isolated with 0.75"deflection Type 3 or 3b isolators.

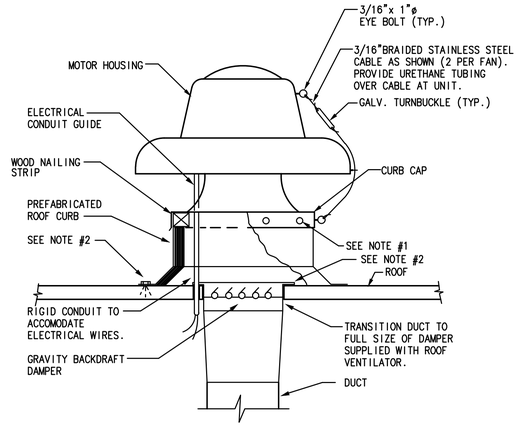

POWER TYPE ROOF VENTILATOR MOUNTING DETAIL
N.T.S.

NOTE:
1. SECURE CURB CAP TO WOOD NAILING STRIP WITH 3/8" CADMIUM PLATED LAG BOLTS NOT OVER 12" ON CENTER.
2. SECURE ROOF CURB, DUCTWORK AND DAMPER TO ROOF WITH 3/8" EXPANSION BOLTS WITH 2" EMB., 12" O.C. (CONCRETE ROOF) OR RUST RESISTANT BOLTS (METAL DECK AND BAR JOIST ROOF)
3. SIZE OF DUCT THROUGH ROOF SHALL NOT BE LARGER THAN CURB SUPPLIED WITH ROOF VENTILATOR.
4. RUN ELECTRIC LINES THROUGH CLEARANCE HOLE PROVIDED IN GRAVITY DAMPER, THEN THROUGH VENTILATOR ELECTRICAL CONDUIT GUIDE.
5. FAN SHALL BE ANCHORED TO WITHSTAND WINDLOADS FROM A THRESHOLD CATEGORY 5 HURRICANE.

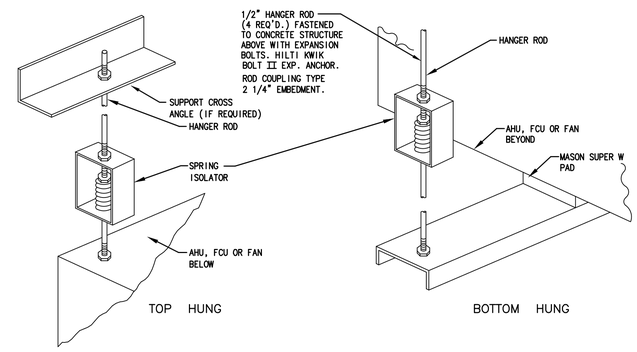

CEILING MOUNTED FAN, AHU AND FCU UNIT MOUNTING DETAIL
N.T.S.

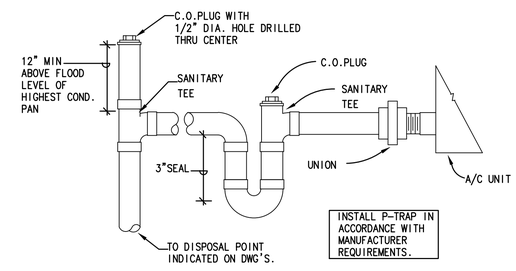

TYPICAL A/C UNIT CONDENSATE DRAIN CONNECTION
N.T.S.

REVISIONS:

KEY WEST CITY HALL AT GLYNN ARCHER
1300 WHITE STREET KEY WEST, FLORIDA
CITY OF KEY WEST

EDWIN O. CERNA LICENSE No 69808 STATE OF FLORIDA PROFESSIONAL ENGINEER
EDWIN O. CERNA, P.E. (MECHANICAL)
FL REG. #0069808

M.E.P.FP. ENGINEER:
HNAGS ENGINEERS
HUFSEY, NICOLAIDES, GARCIA , SUAREZ CONSULTING ENGINEERS
4800 S.W. 74th Court Miami, Florida 33155
(305) 270-9935 Fax (305) 666-5891
HNGS # 13-0016
ENRIQUE J. SUAREZ, P.E. (MECHANICAL) FL REG.#0015794
CARLOS GARCIA, P.E. (ELECTRICAL) FL REG.#0014104

410 Angela Street
Key West, Florida 33040
Telephone (305) 296-1347
Facsimilie (305) 296-2727
Florida license AAC002022
Bender & Associates ARCHITECTS p.a.

Project N º 1305
DETAILS
Date: 8/8/14

PERMIT SET

M4.5

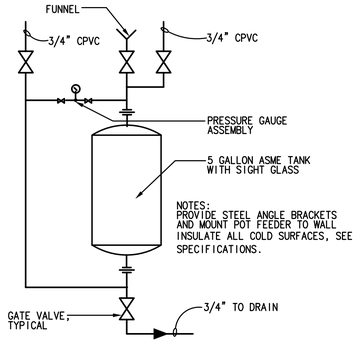

CHILLED WATER 'POT' TYPE CHEMICAL FEEDER

N.T.S.

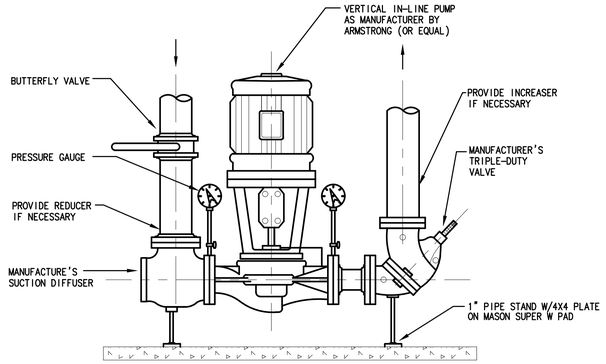

CHILLED WATER PUMP PIPING DIAGRAM

N.T.S.

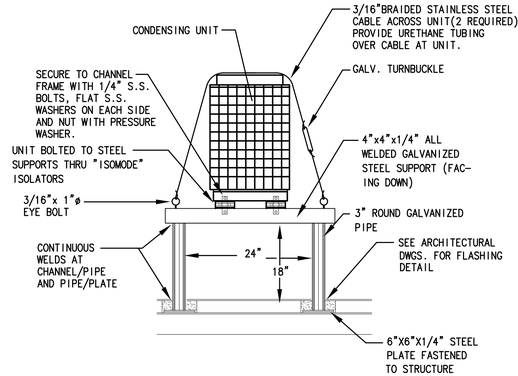

CONDENSING UNIT MOUNTING DETAIL

N.T.S.

NOTE:
1. UNIT & STAND SHALL BE ANCHORED TO WITHSTAND F.B.C. HURRICANE WIND FORCE REQUIREMENTS - HVHZ 1620.2 (186 MPH)
2. ANCHOR BASE PLATE -(4) 1/2"x2 1/2" EXPANSION BOLTS (CONCRETE ROOF)

NOTE:
* INSTALL A FLOAT SWITCH TO SHUT DOWN UNIT. PROVIDE TROUBLE LIGHT IN CEILING TILE BELOW UNIT.

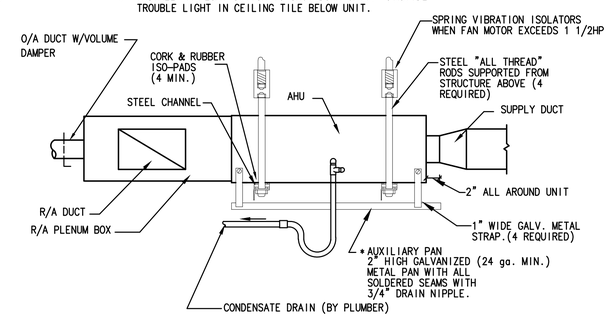

SUGGESTED HORIZONTAL AHU MOUNTING DETAIL

N.T.S.

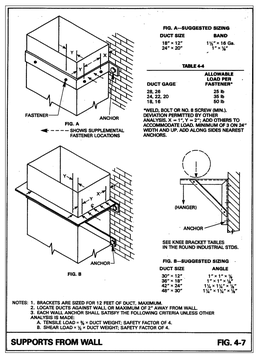

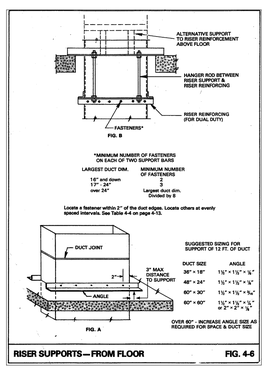

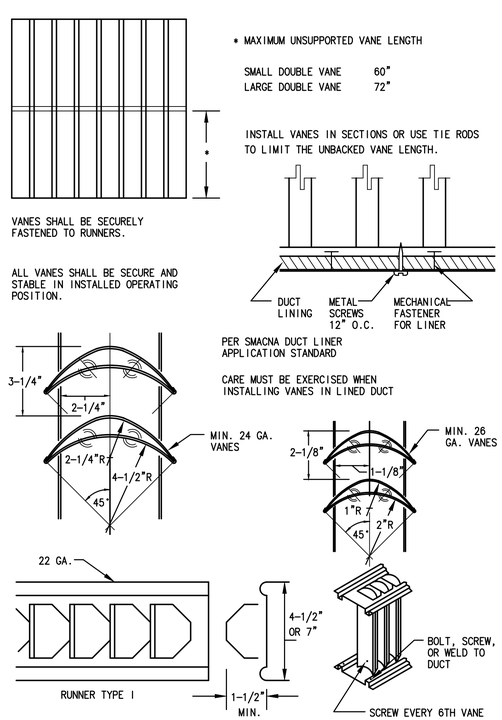

TURNING VANE DETAIL

N.T.S.

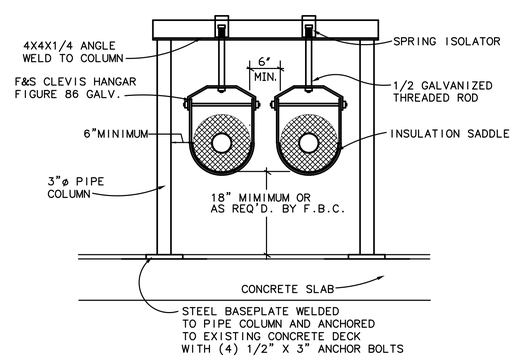

TYPICAL ROOF SUPPORT PIPING DETAIL

N.T.S.

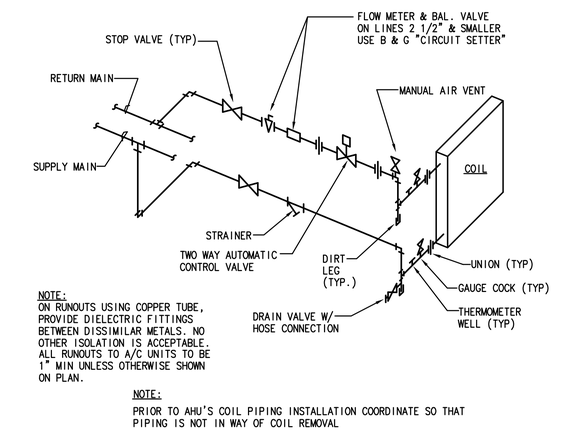

NOTE:
ON RUNOUTS USING COPPER TUBE, PROVIDE DIELECTRIC FITTINGS BETWEEN DISSIMILAR METALS. NO OTHER ISOLATION IS ACCEPTABLE. ALL RUNOUTS TO A/C UNITS TO BE 1" MIN UNLESS OTHERWISE SHOWN ON PLAN.

NOTE:
PRIOR TO AHU'S COIL PIPING INSTALLATION COORDINATE SO THAT PIPING IS NOT IN WAY OF COIL REMOVAL

TYPICAL WATER COIL CONNECTION (FOR COILS WITH 2 WAY CONTROL VALVE)

N.T.S.

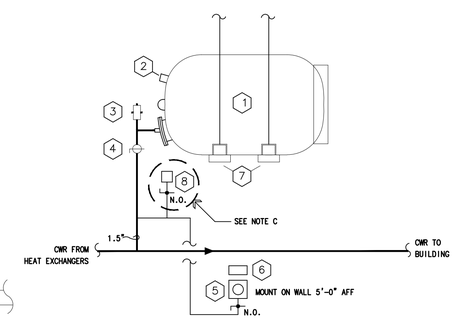

EXPANSION TANK PIPING DIAGRAM

N.T.S.

LEGEND

1. FULL ACCEPTANCE BLADDER EXPANSION TANK, GALLONS, PRECHARGE PRESSURE PSIG, TACO CA SERIES OR EQUAL.
2. CHARGING VALVE CLOSURE.
3. AUTOMATIC AIR VENT.
4. BALL VALVE WITH EXTENDED STEM.
5. PRESSURE GAUGE, 0-160 PSIG, 4.5" DIAL, 1/4" BALL VALVE GAUGE COCK, MINIMUM AND MAXIMUM PRESSURE POINTERS WITH EXTERNAL RESET KNOBS.
6. TAG TO READ "MIN. PRESS. = PSIG, MAX. PRESS. = PSIG", 1/4" HIGH LETTERS.
7. CHANNEL SUPPORTS WITH TANK SADDLES. SUPPORT FROM STRUCTURE.
8. 1/4" BALL VALVE GAUGE COCK, PRESSURE SENSOR.

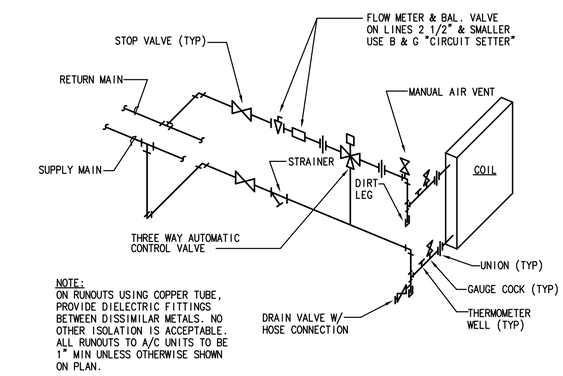

NOTE:
ON RUNOUTS USING COPPER TUBE, PROVIDE DIELECTRIC FITTINGS BETWEEN DISSIMILAR METALS. NO OTHER ISOLATION IS ACCEPTABLE. ALL RUNOUTS TO A/C UNITS TO BE 1" MIN UNLESS OTHERWISE SHOWN ON PLAN.

NOTE:
PRIOR TO AHU'S COIL PIPING INSTALLATION COORDINATE SO THAT PIPING IS NOT IN WAY OF COIL REMOVAL

TYPICAL WATER COIL CONNECTION (FOR COILS WITH 3 WAY CONTROL VALVE)

N.T.S.

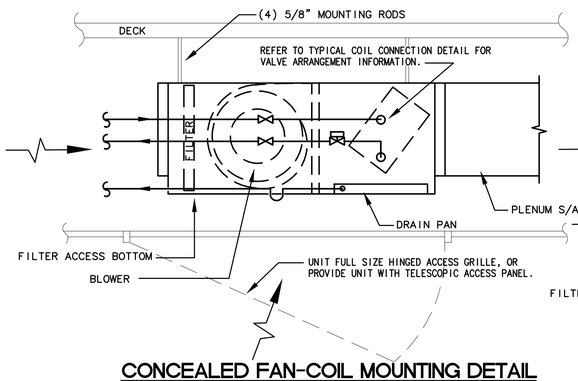

CONCEALED FAN-COIL MOUNTING DETAIL

N.T.S.

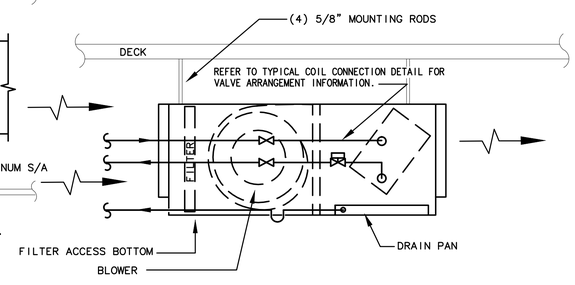

EXPOSED FAN-COIL MOUNTING DETAIL

N.T.S.

REVISIONS:

KEY WEST CITY HALL AT GLYNN ARCHER

1300 WHITE STREET KEY WEST, FLORIDA
CITY OF KEY WEST

EDWIN O. CERNA LICENSE No 69808 STATE OF FLORIDA PROFESSIONAL ENGINEER

EDWIN O. CERNA, P.E. (MECHANICAL)
FL REG. #0069808

M.E.P.FP. ENGINEER:

HNGS ENGINEERS

HURSEY, NICOLAIDES, GARCIA, SUAREZ CONSULTING ENGINEERS
4000 S.W. 74th Court Miami, Florida 33155
(305) 270-9935 Fax (305) 666-5891
HNGS # 13-0016
☐ ENRIQUE J. SUAREZ, P.E. (MECHANICAL) FL REG.#0057764
☐ CARLOS GARCIA, P.E. (ELECTRICAL) FL REG.#0014104

410 Angela Street
Key West, Florida 33040
Telephone (305) 296-1347
Facsimilie (305) 296-2727
Florida License AAC002022

Bender & Associates ARCHITECTS p.a.

Project N º 1305

DETAILS

Date: 8/8/14

PERMIT SET

M4.6

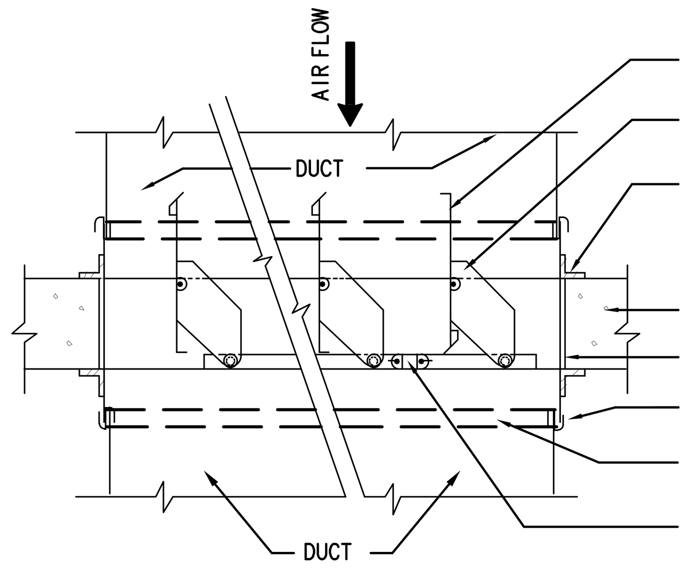

NOTES:

1. WELD FRAME OF F.D. TO 14 GA. SLEEVE.
2. APPLY NON-HARDENING SEALANT AT ALL JOINTS FOR AIR TIGHTNESS
3. STAINLESS STELL CLOSURE SPRING EXTENSION TYPE INSIDE FRAME.
4. PROVIDE ACCESS PANELS AS REQUIRED FOR SERVICE AT ALL DAMPERS . USE MILCOR STYLE M FOR EXPOSED MASONRY APPLICATION,STYLE B FOR ACOUSTICAL PLASTER APPLICATION . PROVIDE U.L. LABELED FIRE RATED TYPE WHERE REQUIRED. FURNISH WITH FACTORY APPLIED,BAKED-ON PRIME COAT AND STANDARD FLUSH TYPE METAL CAM LOCK.
5. FUSIBLE LINK RATING 285°F
6. DAMPER MANUFACTURER RUSKIN MODEL# DIBD60 OR APPROVED EQUAL

FIRE DAMPER MOUNTING DETAIL - FLOOR

N.T.S.

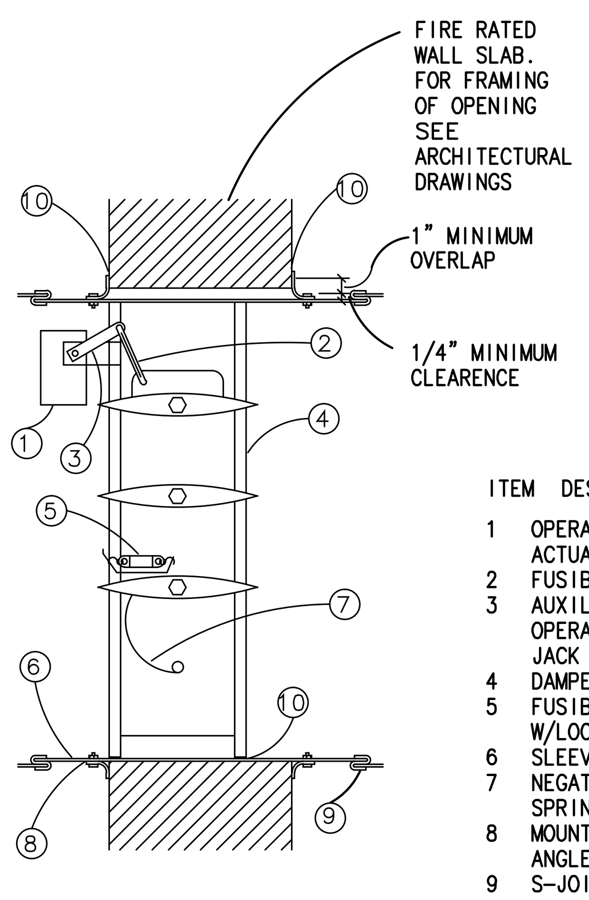

ITEM DESCRIPTION

1. OPERATOR/ ACTUATOR
2. FUSIBLE ROD
3. AUXILIARY OPERATING JACK SHAFT
4. DAMPER FRAME
5. FUSIBLE LINK W/LOCK
6. SLEEVE
7. NEGATOR SPRING
8. MOUNTING ANGLES
9. S-JOINT, SLEEVE TO DUCT
10. CAULKING MATERIAL

INSTALLATION NOTES

1. COMBINATION FIRE AND LEAKAGE RATED SMOKE DAMPERS ARE DESIGNED TO OPERATE WITH BLADES RUNNING HORIZONTALLY AND SHALL BE INSTALLED WITHIN THE FIRE WALL OR SLAB DUCT OPENING. VERTICAL INSTALLATION IS DEPICTED. HORIZONTAL INSTALLATION IS SIMILAR.
2. THE FIRE WALL OPENING SHALL BE A MINIMUM OF 1/8" PER FOOT LARGER THAN THE OVERALL SIZE OF THE DAMPER AND SLEEVE ASSEMBLY
3. THE SLEEVE GAGE SHALL BE EQUAL TO OR HEAVIER THAN THE GAGE OF THE DUCT
4. MOUNTING ANGLES SHALL BE 1 1/2" X 1 1/2" X 14 GAGE MINIMUM AND FASTENED WITH NO. 10 BOLTS OR SCREWS, 3/16" DIAMETER STEEL RIVETS OR 1/2" LONG TACK WELDS. SPACE FASTENERS 8" ON CENTER PROVIDE A CONTINUOUS 1/8" BEAD OF SEALANT. WHEN FASTENING THE DAMPERS TO THE SLEEVE, DAMPERS SHALL BE FASTENED WITH 1/4" -20 BOLTS, NO. 10 SCREWS, OR 1/2" LONG WELDS STAGGERED INTERMITTENTLY ON BOTH SIDES. SPACE FASTENERS 6" ON CENTER AND A MAXIMUM OF 2' FROM THE ENDS OF THE JOINING SECTIONS OR FROM EACH CORNER. A CONTINUOUS 1/8" BEAD OF SEALANT SHALL BE APPLIED ON THE MULLION JOINT. PRESS THE SURFACE OF THE SEALANT IN PLACE TO DISPEL ANY AIR. ANOTHER BEAD OF THE SAME SEALANT SHALL BE APPLIED BETWEEN THE DAMPER AND SLEEVE IN THE SAME MANNER
5. SEALANT TO BE APPLIED SHALL BE LOW OR ZERO VOC
6. DAMPER SLEEVE SHALL NOT EXTEND MORE THAN 6" BEYOND THE FIRE WALL OR PARTITION AND NOT MORE THAN 9" ON THE OPERATOR/ACTUATOR SIDE
7. THE DAMPER SHALL BE INSTALLED IN A WORKMANLIKE FASHION AS INTENDED BY THE ORDER OF DESIGN, IN ACCORDANCE WITH THE MANUFACTURER'S RECOMMENDATIONS
8. THE DAMPER CONSTRUCTION AND INSTALLATION SHALL COMPLY WITH UNDERWRITERS LABORATORIES SAFETY STANDARDS 555, 555S AND NFPA 90A
9. DAMPER MANUFACTURER RUSKIN MODEL # FSD60 LEAKAGE CLASS I OR APPROVED EQUAL.
10. DAMPER SHALL BE PROVIDED WITH END SWITCH

COMBINATION FIRE/SMOKE DAMPER MOUNTING DETAIL - WALL/FLOOR

N.T.S.

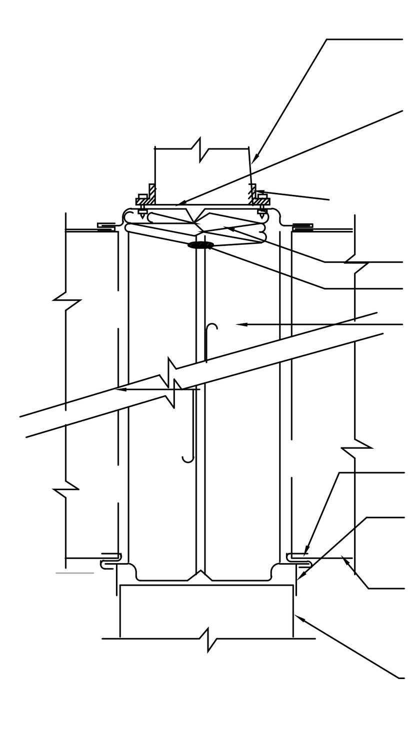

NOTES:

APPLY NON-HARDENING SEALANT AT ALL JOINTS FOR AIR TIGHTNESS.

FUSIBLE LINK RATING 285°F

DAMPER MANUFACTURER RUSKIN MODEL# DIBD60 OR APPROVED EQUAL.

FIRE DAMPER MOUNTING DETAIL - WALL

N.T.S.

PROVIDE ACCESS PANELS AS REQUIRED FOR SERVICE AT ALL DAMPERS, USE MILCOR STYLE M FOR EXPOSED MASONRY APPLICATION, STYLE B FOR ACOUSTICAL PLASTER APPLICATION. PROVIDE U.L. LABELED FIRE RATED TYPE WHERE REQUIRED. FURNISH WITH FACTORY APPLIED, BAKED-ON PRIME COAT AND STANDARD FLUSH TYPE METAL CAM LOCK.

STANDARD 3" WIDE HANGERS

HANGER EXTENSION IS DEFINED AS THE SUM OF THE DISTANCES BETWEEN THE HANGING WIRES AND THE DUCT WALLS (BOTH SIDES).

MAXIMUM HANGER SPACING BY DUCT SIZE, I.D.

DUCT SIZE, INCHES	MAXIMUM HANGER SPACING
48" Wide or greater	4 FT
Less than 48" wide and Less than 48" deep	6 FT
Width between 28" & 48" and greater than 16" deep	6 FT
Less than 28" wide and 16" depth or less	8 FT

CHANNEL SELECTION

IF TOTAL EXTENSION IS NOT GREATER THAN:	MINIMUM CHANNEL GAUGE	MINIMUM CHANNEL PROFILE
6"	22	3"x1.5"
18"	22	3"x2"
30"	18	3"x2"

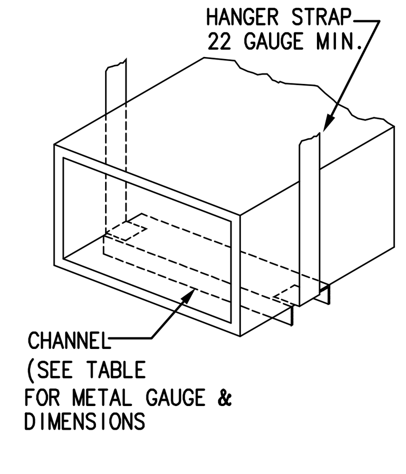

REFER TO DWG M5.3 FOR ADDITIONAL SMACNA STANDARD DETAILS FOR REINFORCEMENTS SCHEDULES.

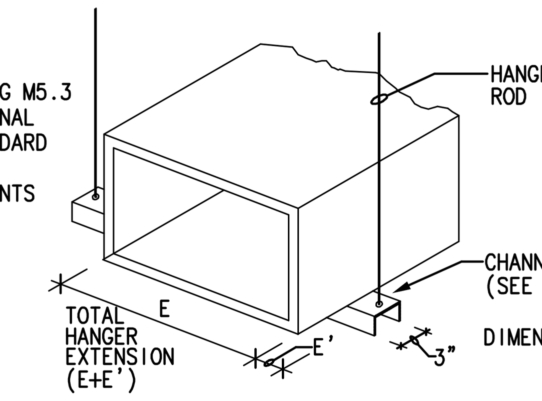

FIBERGLASS DUCT HANGER DETAIL

N.T.S.

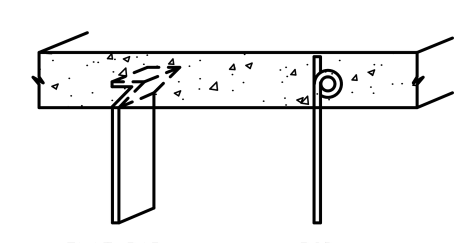

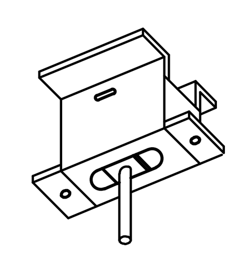

FIG. 3

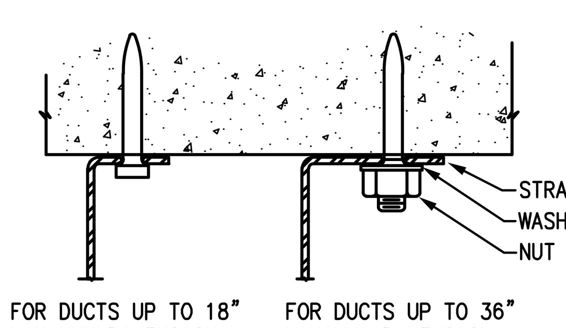

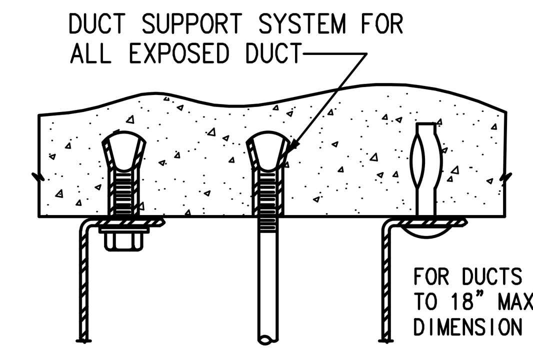

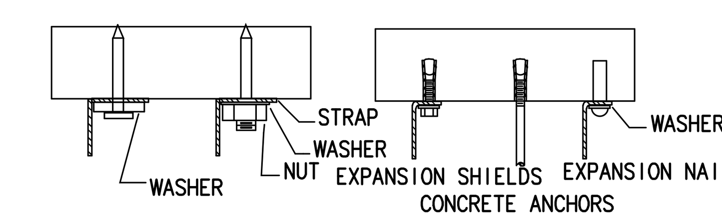

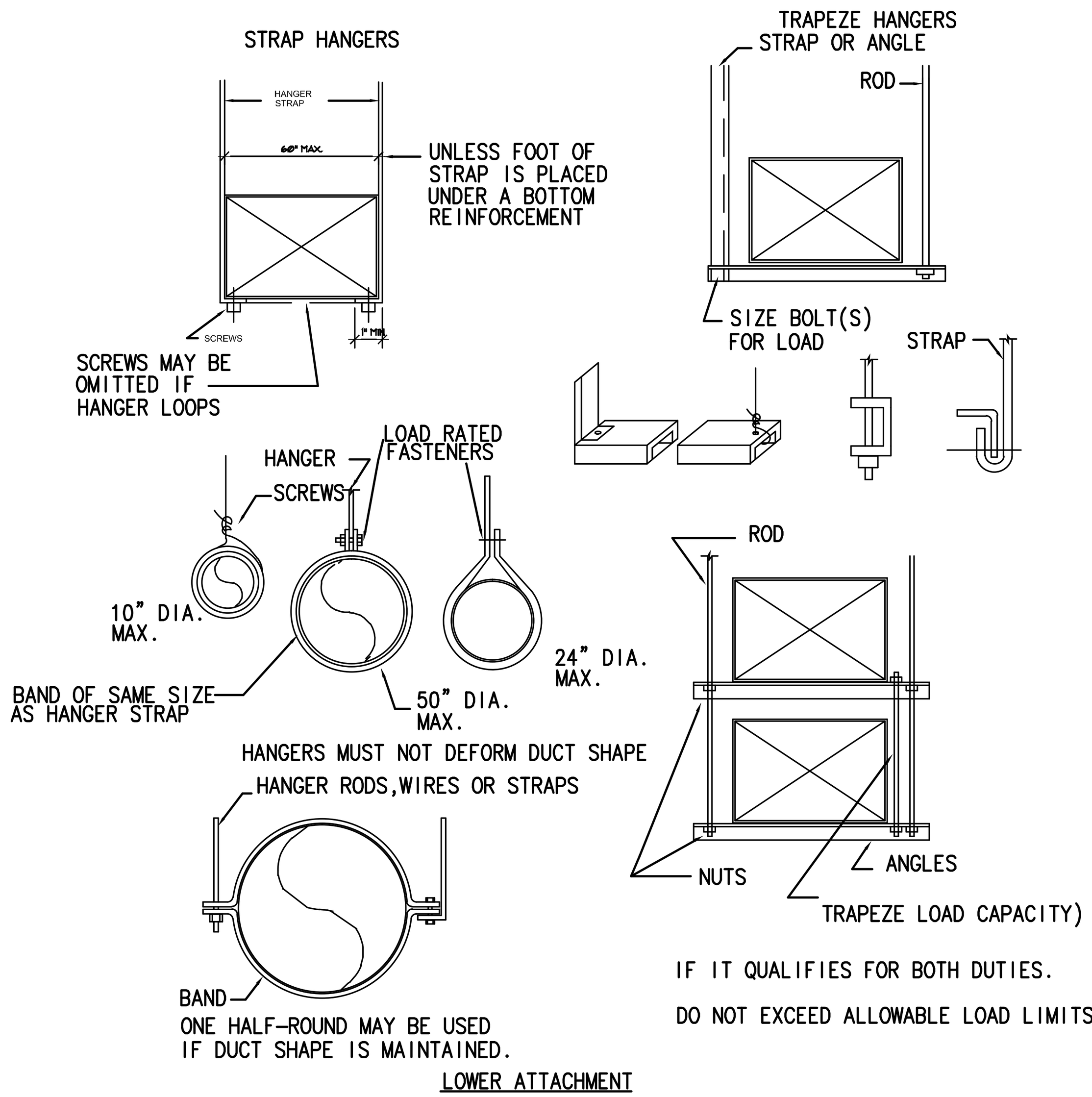

IF IT QUALIFIES FOR BOTH DUTIES.

DO NOT EXCEED ALLOWABLE LOAD LIMITS.

HANGERS FOR DUCTS - UPPER/LOWER ATTACHMENTS

N.T.S

ALL WORK SHALL BE PERFORMED AS PER SMACNA STANDARDS.

MINIMUM HANGER SIZES FOR ROUND DUCT

DIA.	MAX. SPACING	WIRE DIA.	ROD	STRAP
10" dn	12'	ONE 12 GA.	1/4"	1" x 22 ga.
11-18"	12'	TWO 12 GA. OR ONE 8 ga.	1/4"	1" x 22 ga.
19-24"	12'	TWO 10 GA.	1/4"	1" x 22 ga.
25-36"	12'	TWO 8 ga.	3/8"	1" x 20 ga.
37-50"	12'	⟶	TWO 3/8"	TWO 1" x 20 ga.
51-60"	12'	⟶	TWO 3/8"	TWO 1" x 18 ga.
61-84"	12'	⟶	TWO 3/8"	TWO 1" x 16 ga.

NOTES:
1. STRAPS ARE GALVANIZED STEEL; RODS ARE UNCOATED OR GALVANIZED STEEL; WIRE IS BLACK ANNEALED, BRIGHT BASIC OR GALVANIZED STEEL. ALL ARE ALTERNATIVES.
2. SEE FIGURE 4-4 FOR LOWER SUPPORTS.
3. SEE FIGURE 4-2 AND 4-3 FOR UPPER ATTACHMENTS.
4. TABLE ALLOWS FOR CONVENTIONAL WALL THICKNESS, AND JOINT SYSTEMS PLUS ONE lb/sf OF INSULATION WEIGHT. IF HEAVIER DUCTS ARE TO BE INSTALLED, ADJUST HANGER SIZES TO BE WITHIN THEIR LOAD LIMITS; SEE ALLOWABLE LOADS WITH TABLE 4-1.
5. DESIGNERS: FOR INDUSTRIAL GRADE SUPPORTS, INCLUDING SADDLES, SINGLE POINT TRAPEZE LOADS, LONGER SPANS AND FLANGED JOINT LOADS, SEE SMACNA'S ROUND INDUSTRIAL DUCT CONSTRUCTION STANDARDS.
6. SEE FIGURES 3-9 AND 3-10 FOR FLEXIBLE DUCT SUPPORTS.

MINIMUM HANGER SIZES FOR RECTANGULAR DUCT

MAXIMUM HALF OF DUCT PERIMETER	PAIR AT 10 ft. SPACING		PAIR AT 8 ft. SPACING		PAIR AT 5 ft. SPACING		PAIR AT 4 ft. SPACING	
	STRAP	WIRE/ROD	STRAP	WIRE/ROD	STRAP	WIRE/ROD	STRAP	WIRE/ROD
P/2=30"	1"x22 ga.	10 ga. (.135")	1"x22 ga.	10 ga. (.135")	1"x22 ga.	12 ga. (.106")	1"x22 ga.	12 ga. (.106")
P/2=72"	1"x18 ga.	3/8"	1"x20 ga.	1/4"	1"x22 ga.	1/4"	1"x22 ga.	1/4"
P/2=96"	1"x16 ga.	3/8"	1"x18 ga.	3/8"	1"x20 ga.	3/8"	1"x22 ga.	1/4"
P/2=120"	1-1/2"x16 ga.	1/2"	1"x16 ga.	3/8"	1"x18 ga.	3/8"	1"x20 ga.	1/4"
P/2=168"	1-1/2"x16 ga.	1/2"	1-1/2"x16 ga.	1/2"	1"x16 ga.	3/8"	1"x18 ga.	3/8"
P/2=192"	—	1/2"	1-1/2"x16 ga.	1/2"	1"x16 ga.	3/8"	1"x16 ga.	3/8"
P/2=193"UP	SPECIAL ANALYSIS REQUIRED							

WHEN STRAPS ARE LAP JOINED USE THESE MINIMUM FASTENERS:	SINGLE HANGER MAXIMUM ALLOWABLE LOAD STRAP	SINGLE HANGER MAXIMUM ALLOWABLE LOAD WIRE OR ROD (DIA.)
1" x 18,20,22 ga. - TWO #10 OR ONE 1/4" BOLT 1" x 16 ga. - TWO 1/4" DIA. 1" x 16 ga. - TWO 3/8" DIA. PLACE FASTENERS IN SERIES, NOT SIDE BY SIDE.	1" x 22 ga. - 260 LBS. 1" x 20 ga. - 320 LBS. 1" x 18 ga. - 420 LBS. 1" x 16 ga. - 700 LBS. 1-1/2" x 16 ga. - 1100 LBS.	0.106" - 80 LBS. 0.135" - 120 LBS. 0.162" - 160 LBS. 1/4" - 270 LBS. 3/8" - 680 LBS. 1/2" - 1250 LBS. 5/8" - 2000 LBS. 3/4" - 3000 LBS.

NOTES:
1. DIMENSIONS OTHER THAN GAUGE ARE IN INCHES.
2. TABLES ALLOW FOR DUCT WEIGHT, 1 LB./sf INSULATION WEIGHT AND NORMAL REINFORCEMENT AND TRAPEZE WEIGHT, BUT NO EXTERNAL LOADS!
3. FOR CUSTOM DESIGN OF HANGERS, DESIGNERS MAY CONSULT SMACNA'S RECTANGULAR INDUSTRIAL DUCT STANDARDS, THE AISI COLD FORMED STEEL DESIGN MANUAL AND THE AISC STEEL CONSTRUCTION MANUAL.
4. STRAPS ARE GALVANIZED STEEL; OTHER MATERIALS ARE UNCOATED STEEL.
5. ALLOWABLE LOADS FOR P/2 ASSUME THAT DUCTS ARE 16ga. MAXIMUM, EXCEPT THAT WHEN MAXIMUM DUCT DIMENSION (W) IS OVER 60" THEN P/2 MAXIMUM IS 1.25 W.
6. FOR UPPER ATTACHMENTS SEE FIG. 4-2.
7. FOR LOWER ATTACHMENTS SEE FIG. 4-4.
8. FOR TRAPEZE SIZES SEE TABLE 4-3 AND FIG. 4-5.
9. 12,10 OR 8 ga. WIRE IS STEEL OF BLACK ANNEALED, BRIGHT OR GALVANIZED TYPE.

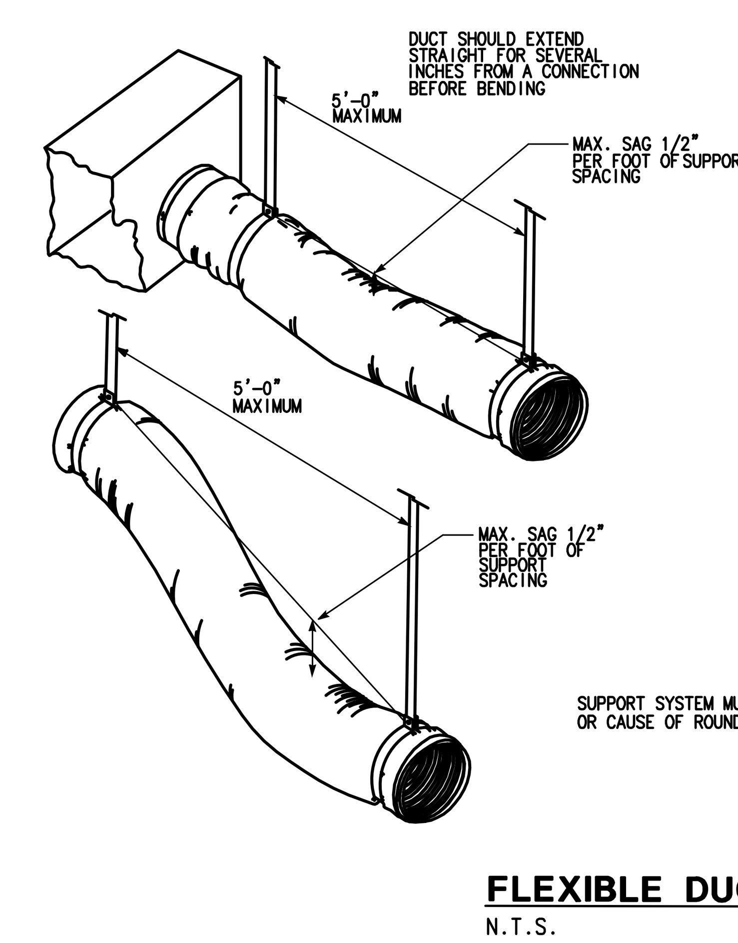

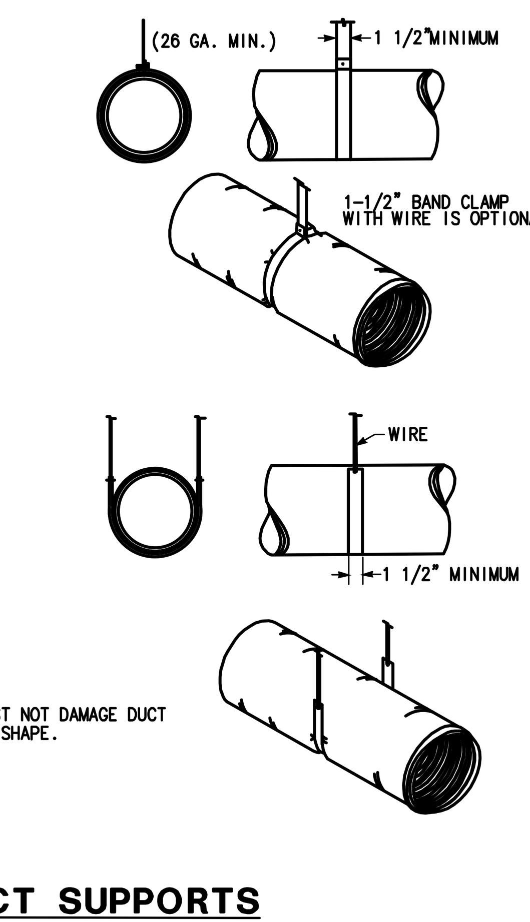

SUPPORT SYSTEM MUST NOT DAMAGE DUCT OR CAUSE OF ROUND SHAPE.

FLEXIBLE DUCT SUPPORTS

N.T.S.

REVISIONS:

KEY WEST CITY HALL AT GLYNN ARCHER

1300 WHITE STREET KEY WEST, FLORIDA
CITY OF KEY WEST

EDWIN O. CERNA LICENSE No 69808 STATE OF FLORIDA PROFESSIONAL ENGINEER

EDWIN O. CERNA, P.E. (MECHANICAL)
FL REG.#0069808

M.E.P.FP. ENGINEER:

HNGS ENGINEERS

HUFSEY, NICOLAIDES, GARCIA , SUAREZ CONSULTING ENGINEERS
4800 S.W. 74th Court Miami, Florida 33155
(305) 270-9935 Fax (305) 666-5891
HNGS # 13-0016

☐ ENRIQUE J. SUAREZ, P.E. (MECHANICAL) FL REG.#0015794
☐ CARLOS GARCIA, P.E. (ELECTRICAL) FL REG.#0014104

410 Angela Street
Key West, Florida 33040
Telephone (305) 296-1347
Facsimilie (305) 296-2727
Florida License AAC002022

Bender & Associates ARCHITECTS p.a.

Project № 1305

DETAILS

Date: 8/8/14

PERMIT SET

M4.7

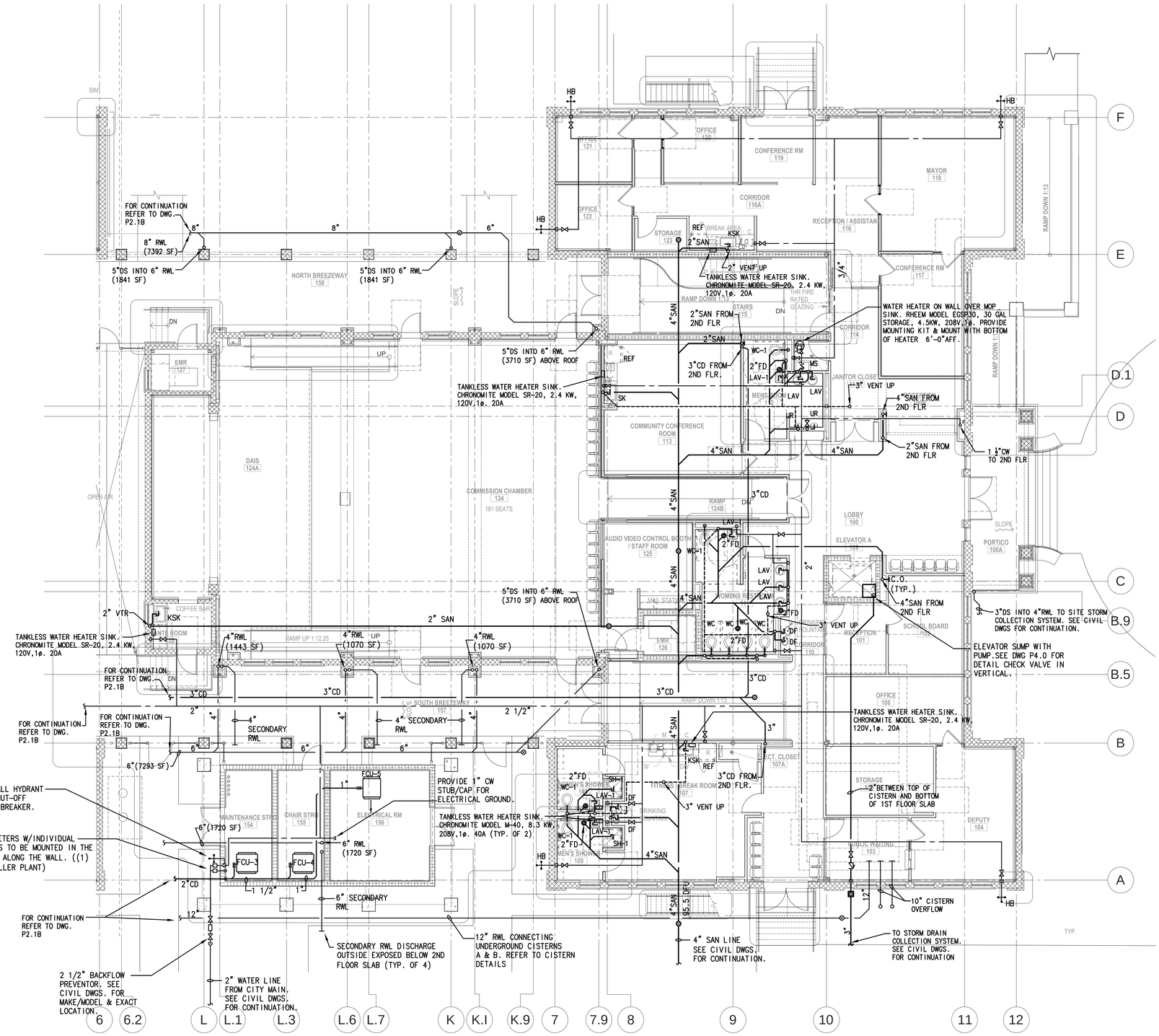

1 1st FLOOR PLUMBING PLAN- WING A

P2.1A

1/8" = 1'-0"

NOTES:

1. THE GENERAL CONTRACTOR IS REQUIRED TO COORDINATE THE INSTALLATION OF ALL BUILDING SERVICES AND UTILITIES BEING INSTALLED BY THE VARIOUS TRADES. PARTICULAR ATTENTION IS CALLED TO THE INSTALLATION OF MEP AND FIRE SPRINKLER SYSTEMS ABOVE CEILING. THE GLYNN ARCHER SCHOOL IS A SIGNIFICANT LOCAL HISTORIC RESOURCE AND RESTORATION OF THE HISTORIC CHARACTERISTICS OF THE EXTERIOR ENVELOPE HAS BEEN GIVEN A HIGH PRIORITY. THE CEILING HEIGHTS HAVE BEEN DESIGNED TO RESPECT AND RETAIN THE HISTORIC WINDOW HEIGHTS. THE A/E DESIGN TEAM HAS ENDEAVORED TO RESOLVE THE MAJOR ISSUES. HOWEVER,, THE CONTRACTOR SHALL PLAN ALL ACTIVITIES TO ENSURE A MINIMUM OF INTERFERENCE BETWEEN THE TRADES.

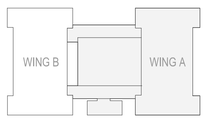

KEY PLAN WING A
1" = 80'-0"

REVISIONS:

KEY WEST CITY HALL AT GLYNN ARCHER

1300 WHITE STREET KEY WEST, FLORIDA
CITY OF KEY WEST

EDWIN O. CERNA LICENSE No 69808 STATE OF FLORIDA PROFESSIONAL ENGINEER

EDWIN O. CERNA, P.E. (MECHANICAL)
FL REG. #0069808

M.E.P.FP. ENGINEER:

HNGS ENGINEERS

HUFSEY, NICOLAIDES, GARCIA , SUAREZ CONSULTING ENGINEERS
4800 S.W. 74th Court Miami, Florida 33155
(305) 270-9935 Fax (305) 666-5891
HNGS # 13-0016
ENRIQUE J. SUAREZ, P.E. (MECHANICAL) FL REG.#0053754
CARLOS GARCIA, P.E. (ELECTRICAL) FL REG.#0014334

410 Angela Street
Key West, Florida 33040
Telephone (305) 296-1347
Facsimile (305) 296-2727
Florida License AAC002022

Bender & Associates ARCHITECTS p.a.

Project N.º 1305

1ST FLOOR PLUMBING PLAN - WING A

Date: 8/8/14

PERMIT SET

P2.1A

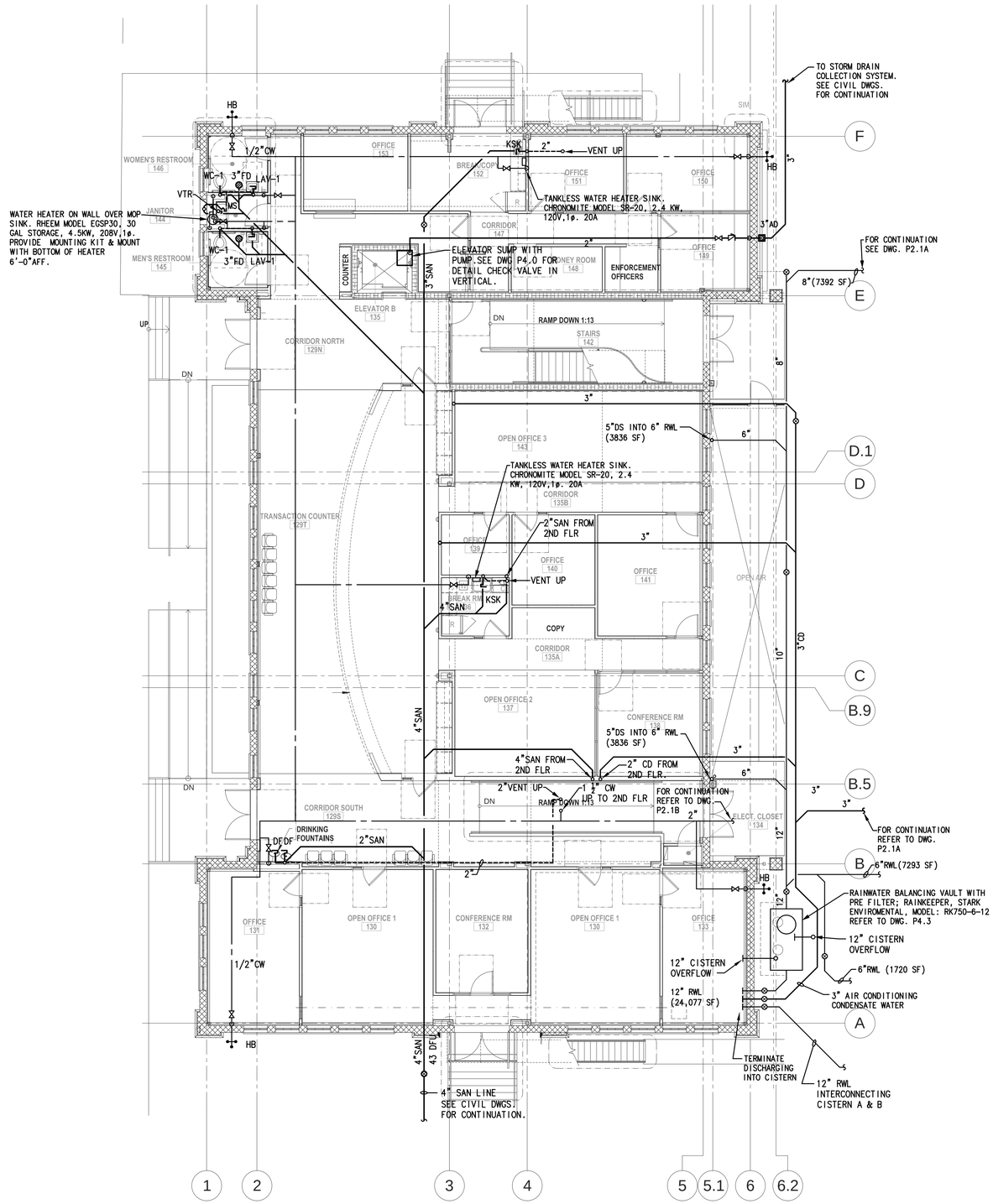

1 1st FLOOR PLUMBING PLAN - WING B
P2.1B
1/8" = 1'-0"

NOTES:

1. THE GENERAL CONTRACTOR IS REQUIRED TO COORDINATE THE INSTALLATION OF ALL BUILDING SERVICES AND UTILITIES BEING INSTALLED BY THE VARIOUS TRADES. PARTICULAR ATTENTION IS CALLED TO THE INSTALLATION OF MEP AND FIRE SPRINKLER SYSTEMS ABOVE CEILING. THE GLYNN ARCHER SCHOOL IS A SIGNIFICANT LOCAL HISTORIC RESOURCE AND RESTORATION OF THE HISTORIC CHARACTERISTICS OF THE EXTERIOR ENVELOPE HAS BEEN GIVEN A HIGH PRIORITY. THE CEILING HEIGHTS HAVE BEEN DESIGNED TO RESPECT AND RETAIN THE HISTORIC WINDOW HEIGHTS. THE A/E DESIGN TEAM HAS ENDEAVORED TO RESOLVE THE MAJOR ISSUES. HOWEVER,, THE CONTRACTOR SHALL PLAN ALL ACTIVITIES TO ENSURE A MINIMUM OF INTERFERENCE BETWEEN THE TRADES.

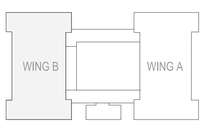

KEY PLAN WING B
1" = 80'-0"

REVISIONS:

KEY WEST CITY HALL AT GLYNN ARCHER

1300 WHITE STREET KEY WEST, FLORIDA
CITY OF KEY WEST

EDWIN O. CERNA LICENSE No 69808 STATE OF FLORIDA PROFESSIONAL ENGINEER

EDWIN O. CERNA, P.E. (MECHANICAL)
FL REG. #0069808

M.E.P.F.P. ENGINEER:

HNTGS ENGINEERS

HUFSEY, NICOLAIDES, GARCIA , SUAREZ CONSULTING ENGINEERS
4800 S.W. 74th Court Miami, Florida 33155
(305) 270-9935 Fax (305) 666-5891
HNGS # 13-0016

- ENRIQUE J. SUAREZ, P.E. (MECHANICAL) FL REG.#0053754
- CARLOS GARCIA, P.E. (ELECTRICAL) FL REG.#0014334

410 Angela Street
Key West, Florida 33040
Telephone (305) 296-1347
Facsimilie (305) 296-2727
Florida License AAC002022

Bender & Associates ARCHITECTS p.a.

Project N.º 1305

1ST FLOOR PLUMBING PLAN - WING B

Date: 8/8/14

PERMIT SET

P2.1B

1 2ND FLOOR PLUMBING PLAN - WING A
P2.2A

1/8" = 1'-0"

NOTES:

1. THE GENERAL CONTRACTOR IS REQUIRED TO COORDINATE THE INSTALLATION OF ALL BUILDING SERVICES AND UTILITIES BEING INSTALLED BY THE VARIOUS TRADES. PARTICULAR ATTENTION IS CALLED TO THE INSTALLATION OF MEP AND FIRE SPRINKLER SYSTEMS ABOVE CEILING. THE GLYNN ARCHER SCHOOL IS A SIGNIFICANT LOCAL HISTORIC RESOURCE AND RESTORATION OF THE HISTORIC CHARACTERISTICS OF THE EXTERIOR ENVELOPE HAS BEEN GIVEN A HIGH PRIORITY. THE CEILING HEIGHTS HAVE BEEN DESIGNED TO RESPECT AND RETAIN THE HISTORIC WINDOW HEIGHTS. THE A/E DESIGN TEAM HAS ENDEAVORED TO RESOLVE THE MAJOR ISSUES. HOWEVER,, THE CONTRACTOR SHALL PLAN ALL ACTIVITIES TO ENSURE A MINIMUM OF INTERFERENCE BETWEEN THE TRADES.

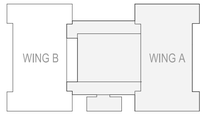

KEY PLAN WING A
1" = 80'-0"

REVISIONS:

KEY WEST CITY HALL AT GLYNN ARCHER

1300 WHITE STREET KEY WEST, FLORIDA
CITY OF KEY WEST

EDWIN O. CERNA LICENSE No 69808 STATE OF FLORIDA PROFESSIONAL ENGINEER
EDWIN O. CERNA, P.E. (MECHANICAL)
FL REG. #0069808

M.E.P.FP. ENGINEER:
HNGS ENGINEERS
HUFSEY, NICOLAIDES, GARCIA , SUAREZ CONSULTING ENGINEERS
4800 S.W. 74th Court Miami, Florida 33155
(305) 270-9935 Fax (305) 666-5891
HNGS # 13-0016
ENRIQUE J. SUAREZ, P.E. (MECHANICAL) FL REG.#0015794
CARLOS GARCIA, P.E. (ELECTRICAL) FL REG.#0014104

410 Angela Street
Key West, Florida 33040
Telephone (305) 296-1347
Facsimilie (305) 296-2727
Florida License AAC002022
Bender & Associates ARCHITECTS p.a.

Project N º 1305
2ND FLOOR PLUMBING PLAN - WING A
Date: 8/8/14

PERMIT SET

P2.2A

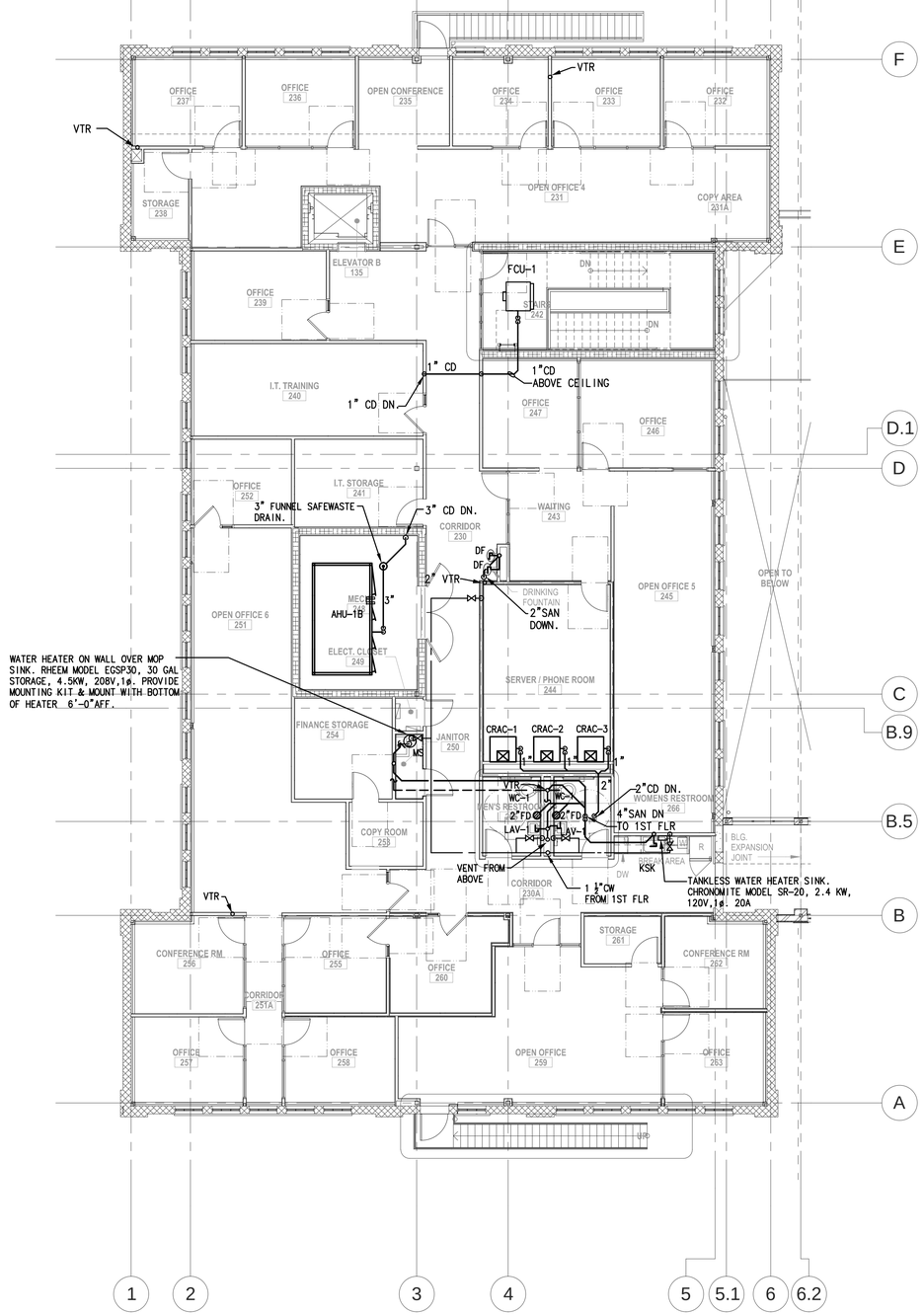

1 2ND FLOOR PLUMBING PLAN - WING B

P2.2B 1/8" = 1'-0"

NOTES:

1. THE GENERAL CONTRACTOR IS REQUIRED TO COORDINATE THE INSTALLATION OF ALL BUILDING SERVICES AND UTILITIES BEING INSTALLED BY THE VARIOUS TRADES. PARTICULAR ATTENTION IS CALLED TO THE INSTALLATION OF MEP AND FIRE SPRINKLER SYSTEMS ABOVE CEILING. THE GLYNN ARCHER SCHOOL IS A SIGNIFICANT LOCAL HISTORIC RESOURCE AND RESTORATION OF THE HISTORIC CHARACTERISTICS OF THE EXTERIOR ENVELOPE HAS BEEN GIVEN A HIGH PRIORITY. THE CEILING HEIGHTS HAVE BEEN DESIGNED TO RESPECT AND RETAIN THE HISTORIC WINDOW HEIGHTS. THE A/E DESIGN TEAM HAS ENDEAVORED TO RESOLVE THE MAJOR ISSUES. HOWEVER,, THE CONTRACTOR SHALL PLAN ALL ACTIVITIES TO ENSURE A MINIMUM OF INTERFERENCE BETWEEN THE TRADES.

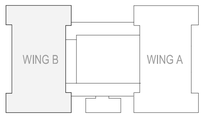

KEY PLAN WING B
1" = 80'-0"

REVISIONS:

KEY WEST CITY HALL AT GLYNN ARCHER

1300 WHITE STREET KEY WEST, FLORIDA
CITY OF KEY WEST

EDWIN O. CERNA LICENSE No 69808 STATE OF FLORIDA PROFESSIONAL ENGINEER

EDWIN O. CERNA, P.E. (MECHANICAL)
FL REG. #0069808

M.E.P.FP. ENGINEER:

HNGS ENGINEERS

HURSEY, NICOLAIDES, GARCIA , SUAREZ CONSULTING ENGINEERS
4000 S.W. 74th Court. Miami, Florida 33155
(305) 270-9935 Fax (305) 666-5891
HNGS # 13-0016

ENRIQUE J. SUAREZ, P.E. (MECHANICAL)
FL REG.#0026754

CARLOS GARCIA, P.E. (ELECTRICAL)
FL REG.#0014104

410 Angela Street
Key West, Florida 33040
Telephone (305) 296-1347
Facsimilie (305) 296-2727
Florida License AAC002022

Bender & Associates ARCHITECTS *p.a.*

Project N º 1305

2ND FLOOR PLUMBING PLAN - WING B

Date: 8/8/14

PERMIT SET

P2.2B

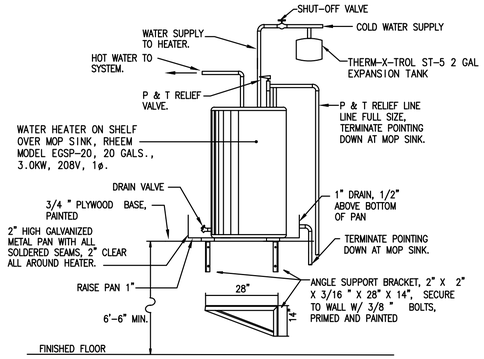

NOTE:
PROVIDE INTEGRAL HEAT TRAP

TYPICAL WALL MOUNTED WATER HEATER DETAIL
N.T.S.

PLUMBING FIXTURE SCHEDULE (green)

MARK	FIXTURE	MANUFACTURER AND MODEL	CW	HW	WASTE	TRAP	REMARKS
LAV	LAVATORY	AMERICAN STANDARD 9482.000	1/2"	1/2"	1-1/4"	1-1/4"	AQUALYN, UNIVERSAL ACCESS V.C.AMER. STD. RELIANT 3 FAUCET # 7385.000 WITH .5 GPM FLOW RESTRICTOR AND POP-UP DRAIN WITH 1-1/4" T.P., 1-1/4" C.P. 17 GA. "P" TRAP, 3/8" C.P. SUPPLIES WITH WHEEL HANDLE STOPS.
LAV-1	LAVATORY (HANDICAP)	AMERICAN STANDARD #0195.073	1/2"	1/2"	1-1/4"	1-1/4"	WHEELCHAIR ROXALYN LAVATORY V.C. WITH 4" CENTERS, HERITAGE FAUCET # 7402.172H WITH .5 GPM FLOW RESTRICTOR AND POP-UP DRAIN WITH 1-1/4" T.P., 1-1/4" C.P. 17 GA. "P" TRAP, 3/8" C.P. SUPPLIES WITH LOOSE STOPS, JOSAM FLOOR MOUNTED CARRIER.
WC	WATER CLOSET	AMERICAN STANDARD 2856.128	1"	___	4"	INTEGRAL	WALL MOUNTED AFFWALL MILLENIUM FLOWISE, CHURCH #9500C OPEN FRONT SEAT LESS COVER, MANUAL FLUSH VALVE AMERICAN STD 6047.121.002 WITH 1.28 GPF DIAPHRAGM KIT.
WC-1	WATER CLOSET	AMERICAN STANDARD 2856.128	1"	___	4"	INTEGRAL	WALL MOUNTED AFFWALL MILLENIUM FLOWISE, CHURCH #9500C OPEN FRONT SEAT LESS COVER, MANUAL FLUSH VALVE AMERICAN STD 6047.121.002 WITH 1.28 GPF DIAPHRAGM KIT.
UR	URINAL	AMERICAN STANDARD 6550.005	3/4"	___	2"	INTEGRAL	ALLBROOK V.C. FLOWISE 0.5 GPF SIPHON-JET URINAL WITH 3/4" TOP INLET SPUD, ZURN AQUAVANTAGE #ZER6003AV-EWS WITH 0.5 GPF DIAPHRAGM KIT.
MS	MOP SINK	FIAT # MSB-2424	1/2"	1/2"	3"	3"	24x24 "MOLDESTONE" FIAT #E-77-AA BUMPER GUARD, FIAT #832-AA HOSE AND HOSE BRACKET. FIAT #830-AA HAUCET WITH HOSE OUTLET, TOP BRACE, VACUUM BREAKER AND INTEGRAL STOPS.
DF	DRINKIN FOUNTAIN	HAWS#1011	1/2"	1/2"	1-1/4"	1-1/4"	BI-LEVEL WALL MOUNT CABINET DRINKING FOUNTAIN S.S. FINISH PROVIDE 1-1/4" T.P., 17 GA"P" TRAP ABD 3/8" C.P. FLEXIBLE SUPPLY WITH HANDLE STOP.
SH	SHOWER HEAD	CHICAGO FAUCETS SH-PB1-03-000	1/2"	1/2"	2"	2"	CHICAGO FAUCETS, BALANCED PRESSURE SHOWER VALVE WITH SHOWER HEAD, MODEL SH-PB1-03-000. 1.5 GPM MAX FLOW RATE. (SHOWER BASIN TO BE SELECTED BY ARCHITECT)
KSK	SINK	STERLING #UCL2522	1/2"	1/2"	1-1/2"	1-1/2"	S.S. UNDERCOUNTER SINGLE COMPARTMENT. RELIANT SINGLE CONTROL PULL OUT SPRAY KITCHEN FAUCET AMERICAN STANDARD 4205.104 WITH 2.0 GPM FLOW RESTRICTOR AT FAUCET, #LK-35 WITH 1-1/2" T.P.,1-1/2" C.P. 17 GA. "P" TRAP, 3/8" C.P. SUPPLIES WITH HANDLE STOPS

PLUMBING SYMBOL LEGEND

SYMBOL	DESCRIPTION
	SANITARY AND RAINWATER LINES
	VENT LINE
SD	STORM DRAIN LINE
C	CONDENSATE LINE
	COLD WATER LINE
	HOT WATER LINE
	HOT WATER RETURN LINE
F.C.O.	FLUSH CLEAN OUT
F.D.	FLOOR DRAIN
F.F.D.	FUNNEL FLOOR DRAIN
A.D.	AREA DRAIN
D.D.	DECK DRAIN
G.D.	GARAGE DRAIN
P.D.	PLANTER DRAIN
R.D.	ROOF DRAIN
C.O.	CLEAN OUT
VTR	VENT THRU ROOF
RWL	RAIN WATER LEADER
H.B.	HOSE BIBB
ABV	ABOVE
TYP	TYPICAL
DN	DOWN
	SHUT OFF VALVE
	CHECK VALVE
	PRESSURE REDUCING VALVE
	BALANCING VALVE
	FLOOR DRAINS
	FLOOR SINK
	FLUSH CLEAN OUT
	HOSE BIBB
G	GAS LINE

GENERAL PLUMBING NOTES

A. GENERAL:
1. WORK UNDER THIS SECTION INCLUDES FURNISHING ALL LABOR, EQUIPMENT, MATERIALS, SUPPLIES AND COMPONENTS AS PERFORMING ALL OPERATIONS AS NECESSARY FOR THE INSTALLATION OF THE COMPLETE PLUMBING SYSTEM.
2. INSTALL ALL EQUIPMENT AND MATERIALS IN ACCORDANCE WITH MANUFACTURER's RECOMMENDATIONS.
3. SUBMIT MANUFACTURER'S DATA AND SHOP DRAWINGS ON ALL EQUIPMENT FOR REVIEW BEFORE INSTALLATION.
4. NO WATER LINES SHALL RUN INSIDE CONCRETE SLABS.
5. ALL DIMENSIONS AND ACTUAL CONSTRUCTION CONDITIONS MUST BE VERIFIED AT THE JOB SITE.
6. THE CONTRACTOR PERFORMING THE WORK SHALL COORDINATE ALL HIS WORK WITH OTHER TRADES AND FIELD CONDITIONS.
7. PLUMBER SHALL NOT DEVIATE FROM THE SANITARY CONNECTION FORMAT WITHOUT ENGINEER'S APPROVAL.
8. THE CONTRACTOR PERFORMING THE WORK, PRIOR TO SUBMITTING HIS PROPOSAL PRICE, SHALL VISIT THE SITE, FAMILIARIZE HIMSELF WITH ALL FIELD CONDITIONS, AND SHALL OBTAIN ALL REQUIRED INFORMATION NECESSARY TO COMPLETE THE JOB. ANY DISCREPANCIES BETWEEN WHAT IS SHOWN ON THE DRAWINGS AND ACTUAL WORK REQUIRED TO COMPLETE THE JOB SHALL BE TAKEN INTO ACCOUNT IN THE PROPOSAL PRICE.

B. RAINWATER, SANITARY WASTE AND VENT PIPING:
1. SHALL BE CAST IRON NO-HUB ABOVE GROUND, PUSH-ON JOINT WITH NEOPRENE GASKET UNDERGROUND.
2. ALL SANITARY HORIZONTAL PIPING SHALL OVER 2" BE SLOPED 1/8" PER LINEAL FOOT, 2" AND SMALLER SHALL SLOPE 1/4" PER FOOT.

C. DOMESTIC WATER PIPING:
1. CW, HW, HWR PIPING SHALL BE COPPER TYPE 'L' WITH BRONZE OR WROUGHT COPPER SOLDER JOINT FITTINGS. JOINTS WITH 95/5 SOLDER, INSTALLED PER MANUFACTURER'S RECOMMENDATIONS.
2. INSTALL CAPPED WATER HAMMER ARRESTOR AND MECHANICAL SHOCK ABSORBERS WHERE SHOWN ON WATER RISERS. CHAMBERS SHALL NOT BE LESS THAN 3/4" AND 18" HIGH.
3. PROVIDE DIELECTRIC ISOLATION BETWEEN CONTACT OF DISSIMILAR METALS.
4. C.P. ESCUTCHEON PLATES REQUIRED ON ALL WALL PENETRATIONS.
5. PROVIDE SHUT OFF VALVES AT EACH PLUMBING FIXTURE WATER SUPPLY.

E. CONDENSATE PIPING:
1. A/C CONDENSATE SHALL BE COPPER TYPE "M". INSULATE ALL RUNS WITH 1/2" FIBERGLASS INSULATION WITH ALL SERVICE JACKET INSTALLED PER MANUFACTURER'S RECOMMENDATIONS OR 1/2" ARMAFLEX. USE 3/4" INSULATION FOR RISERS.

F. PIPE HANGERS AND SUPPORTS:
1. PROVIDE ADJUSTABLE HANGERS, INSERTS AND SUPPLEMENTARY STEEL AS REQUIRED FOR PROPER SUPPORT OF PIPE LINES.
2. PROVIDE EXPANSION FITTINGS WHEN PIPES RUN THRU EXPANSION JOINS.

G. CLEANOUTS:
1. CLEANOUTS SHALL BE PROVIDED AND INSTALLED AT POINTS INDICATED BY "C.O." AND "F.C.O." ON DRAWINGS. THIS ALSO INCLUDES WERE NOT INDICATED ON DRAWINGS AT ALL CHANGES IN DIRECTIONS AND AT THE BASE OF STACKS FOR BOTH SANITARY AND STORM DRAIN SYSTEMS.
2. CLEANOUT COVERS:
   WALLS - JOSAM 58600-SS
   RESILIENT FLOORS - JOSAM 58360 FERRULE WITH 8640 AND NIKALOY TOP
   CONCRETE FLOORS - JOSAM 58360 WITH NIKALOY TOP
   TILE FLOORS - JOSAM 58480 FERRULE WITH NIKALOY COVER

H. MISCELLANEOUS PRODUCTS:
1. FLOOR DRAINS
   RESTROOMS - JOSAM 30003-5A WITH NIKALOY TOP AND 1/2" PRIMER TAP.
   EQUIPMENT ROOMS - JOSAM 30004-8A WITH NIKALOY TOP AND 1/2" PRIMER TAP.

   NOTE: ALL FLOOR DRAINS SHALL BE RESEALED BY MEANS OF AN AUTO PRIMING VALVE INSTALLED AT THE NEAREST CW SUPPLY LINE WITH A 1/2" RESEAL LINE SLOPED TO DRAIN PRIMER TAP CONNECTION. USE 'PPP' MODEL OREGON 1 PRIMER VALVE.
2. AREA DRAINS (A.D.): JOSAM 23000 SERIES 14" SQ. PROMENADE DRAIN WITH HEELPROOF, NICKEL-ALLOY GRATE.
3. ROOF DRAINS (R.D.): JOSAM 21000 SERIES ROOF DRAIN.

NOTE: WHERE DRAINS ARE INSTALLED AT COMPOSITION DECKS WITH SECONDARY MEMBRANES PROVIDE OPTION #85, STAINLESS STEEL PERFORATED EXTENSION (HEIGHT AS NECESSARY FOR LOCATION OF INSTALLATION).

I. HOSE BIBBS:
1. HB - JR SMITH WALL HYDRANT MODEL 5518 WITH VACUUM BREAKER.

J. EXECUTION:
1. ALL WATER PIPING SHALL BE TESTED AT 100 PSIG, STERILIZED AND FLUSHED BEFORE CONNECTION TO BUILDING SYSTEMS.

K. VALVE TAGS SHALL BE USED FOR VALVE IDENTIFICATION. SERVICE AND HOSE BIBB VALVES SHALL BE IDENTIFIED. ALL OTHER VALVES INSTALLED IN LOCATIONS NOT ADJACENT TO THE FIXTURE OR APPLIANCE SHALL BE IDENTIFIED, INDICATING THE FIXTURE OR APPLIANCE SERVED.

L. SEE SPECIFICATION BOOK FOR ADDITIONAL DETAILED SPEC'S.

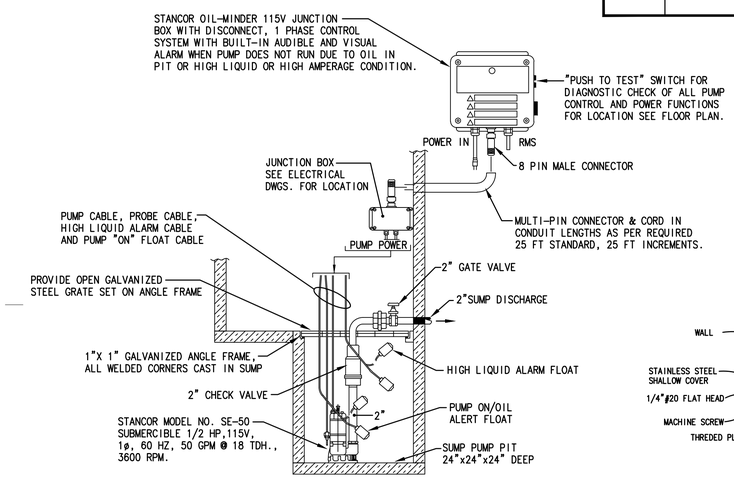

ELEVATOR SUMP PUMP DETAIL
N.T.S.
NOTE: WHERE 18 X 18 X 24 SUMP PIT IS PROVIDED, SPECIFY OM-300 VERTICAL FLOATS AND PROBE.

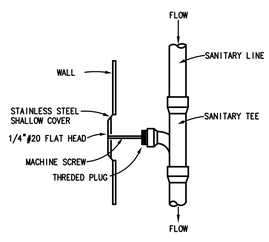

WALL CLEANOUT DETAIL
N.T.S.

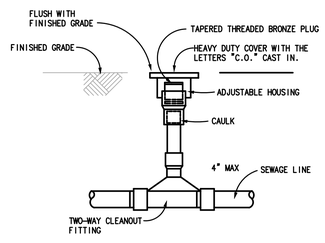

TWO WAY FLUSH CLEANOUT DETAIL
N.T.S.

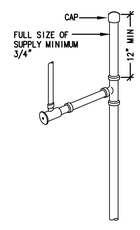

TYPICAL WATER HAMMER ARRESTOR DETAIL
N.T.S.

REVISIONS:

KEY WEST CITY HALL
AT GLYNN ARCHER
1300 WHITE STREET KEY WEST, FLORIDA
CITY OF KEY WEST

EDWIN O. CERNA LICENSE No 69808 STATE OF FLORIDA PROFESSIONAL ENGINEER
EDWIN O. CERNA, P.E. (MECHANICAL)
FL REG. #0069808

M.E.P.F.P. ENGINEER:
HNAGS ENGINEERS
HUFSEY, NICOLAIDES, GARCIA , SUAREZ CONSULTING ENGINEERS
4800 S.W. 74th Court Miami, Florida 33155
(305) 270-9935 Fax (305) 666-5891
HNGS # 13-0016
ENRIQUE J. SUAREZ, P.E. (MECHANICAL) FL REG.#0015794
CARLOS GARCIA, P.E. (ELECTRICAL) FL REG.#0014104

410 Angela Street
Key West, Florida 33040
Telephone (305) 296-1347
Facsimilie (305) 296-2727
Florida License AAC002022
Bender & Associates ARCHITECTS p.a.

Project N º 1305
NOTES & DETAILS
Date: 8/8/14

PERMIT SET

P4.0

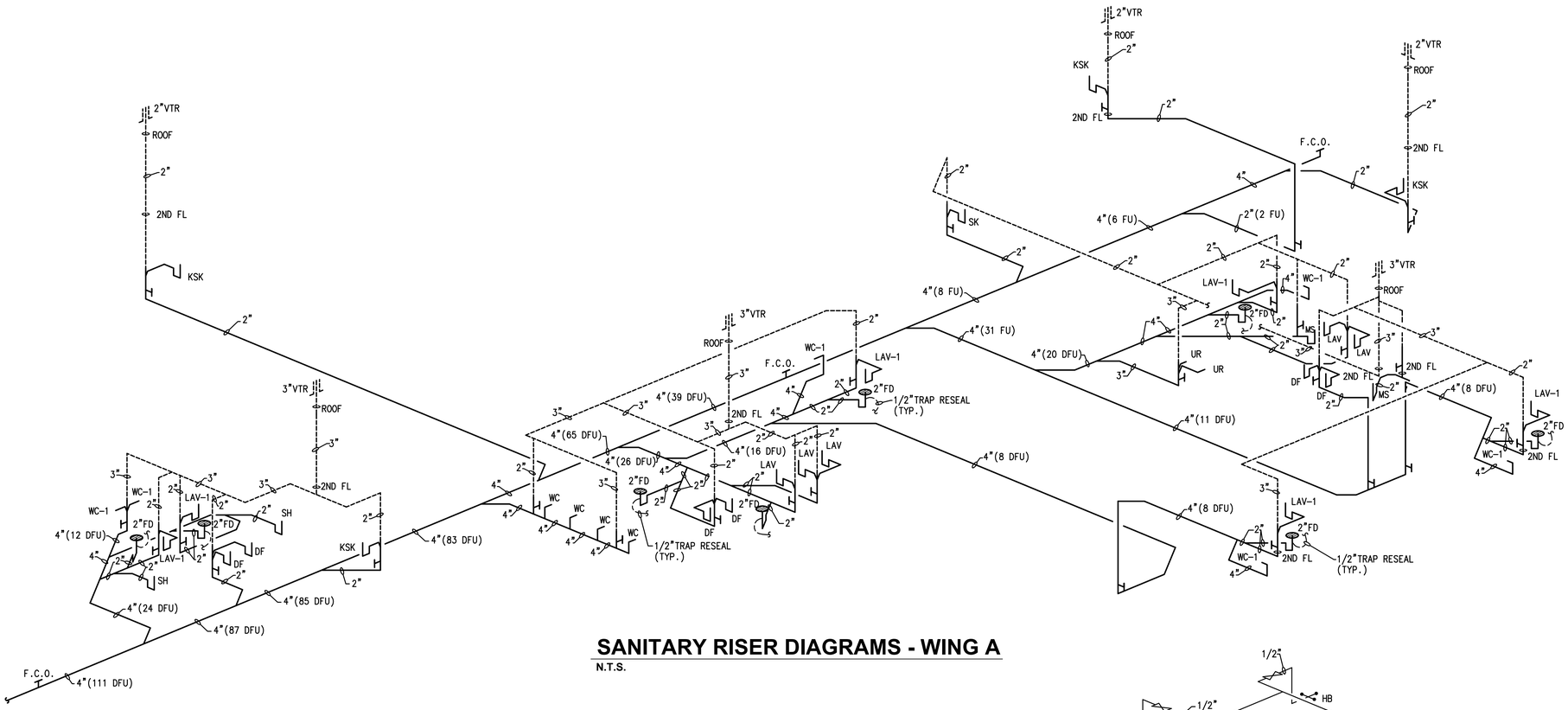

SANITARY RISER DIAGRAMS - WING A

N.T.S.

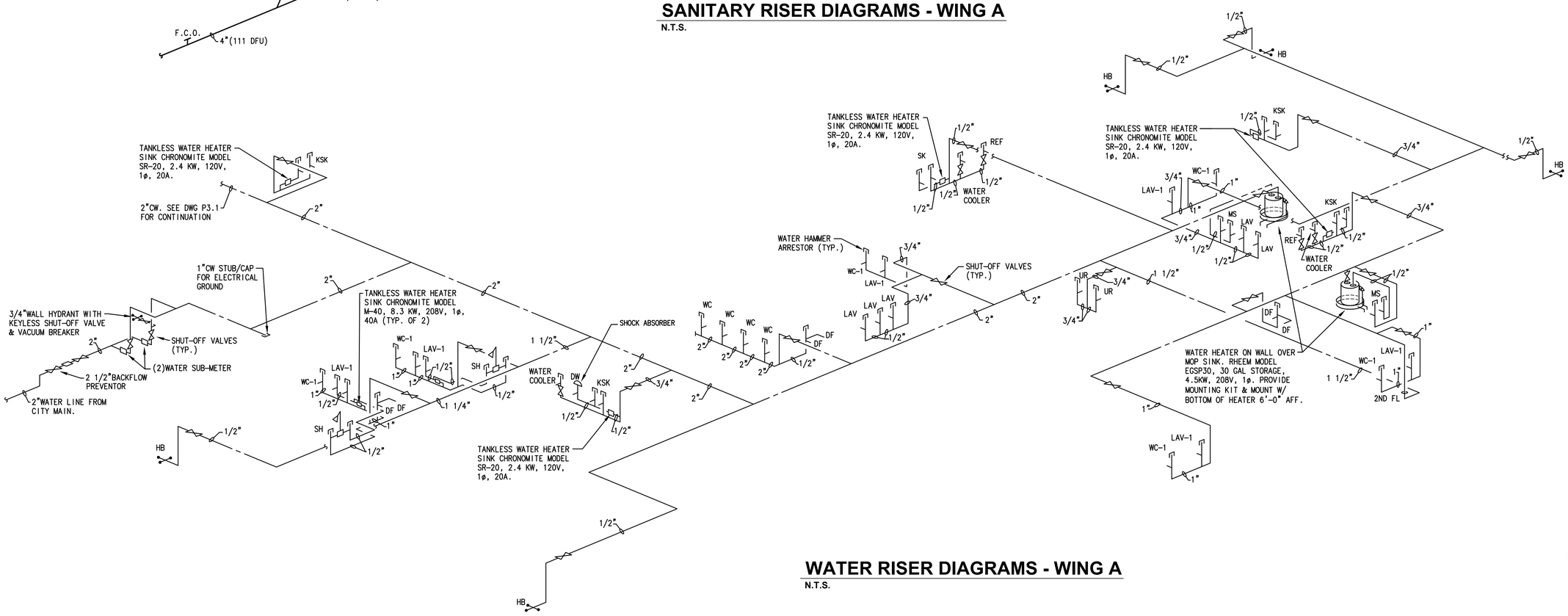

WATER RISER DIAGRAMS - WING A

N.T.S.

REVISIONS:

KEY WEST CITY HALL AT GLYNN ARCHER

1300 WHITE STREET KEY WEST, FLORIDA
CITY OF KEY WEST

EDWIN O. CERNA LICENSE No 69808 STATE OF FLORIDA PROFESSIONAL ENGINEER

EDWIN O. CERNA, P.E. (MECHANICAL)
FL REG. #0069808

M.E.P.FP. ENGINEER:

HNGS ENGINEERS

HUFSEY, NICOLAIDES, GARCIA , SUAREZ
CONSULTING ENGINEERS
4800 S.W. 7th Court Miami, Florida 33155
(305) 270-9935 Fax (305) 666-5891
HNGS # 13-0016
☐ ENRIQUE J. SUAREZ, P.E. (MECHANICAL)
FL REG.#0053794
☐ CARLOS GARCIA, P.E. (ELECTRICAL)
FL REG.#0014104

410 Angela Street
Key West, Florida 33040
Telephone (305) 296-1347
Facsimilie (305) 296-2727
Florida License AAC002022

Bender & Associates ARCHITECTS p.a.

Project N° 1305

PLUMBING RISERS DIAGRAMS

Date: 8/8/14

PERMIT SET

P4.1

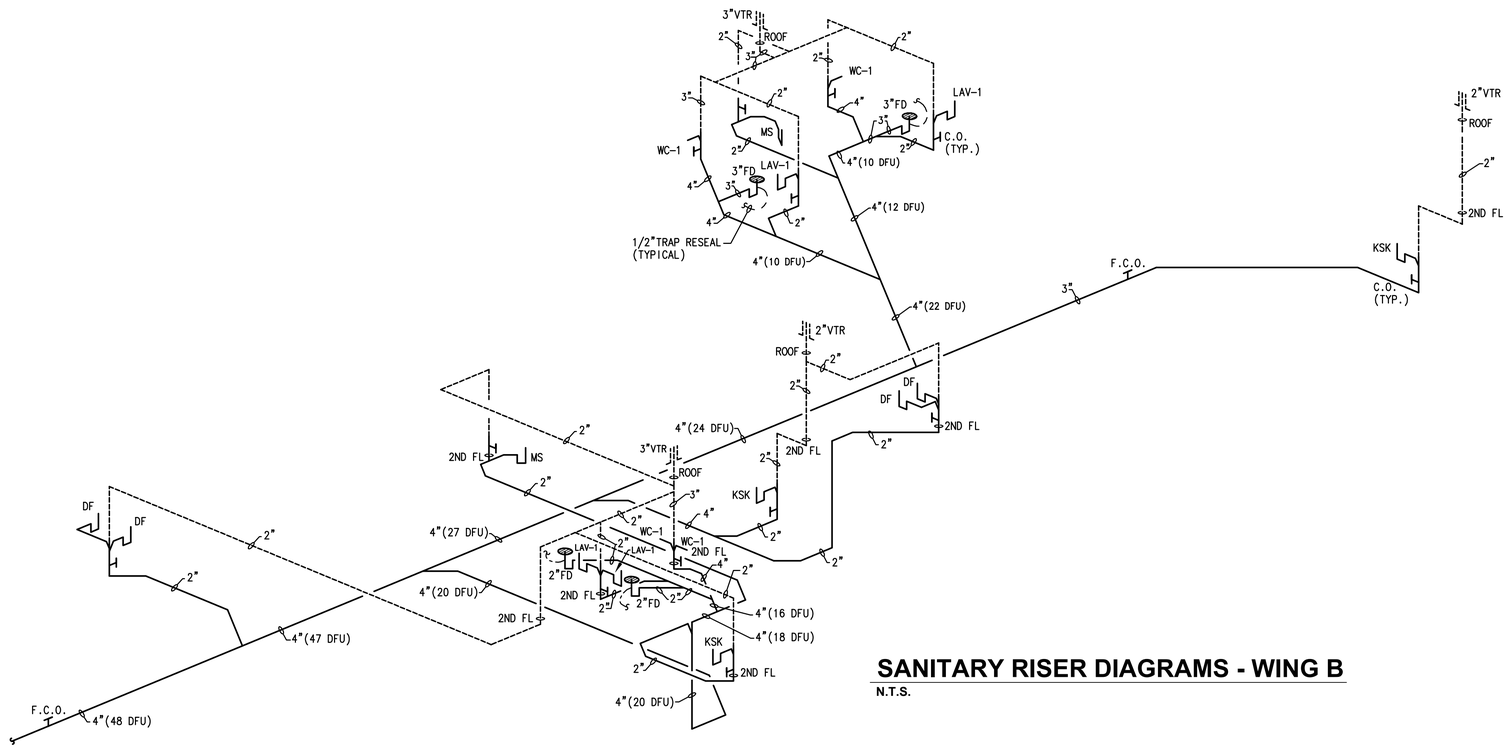

SANITARY RISER DIAGRAMS - WING B

N.T.S.

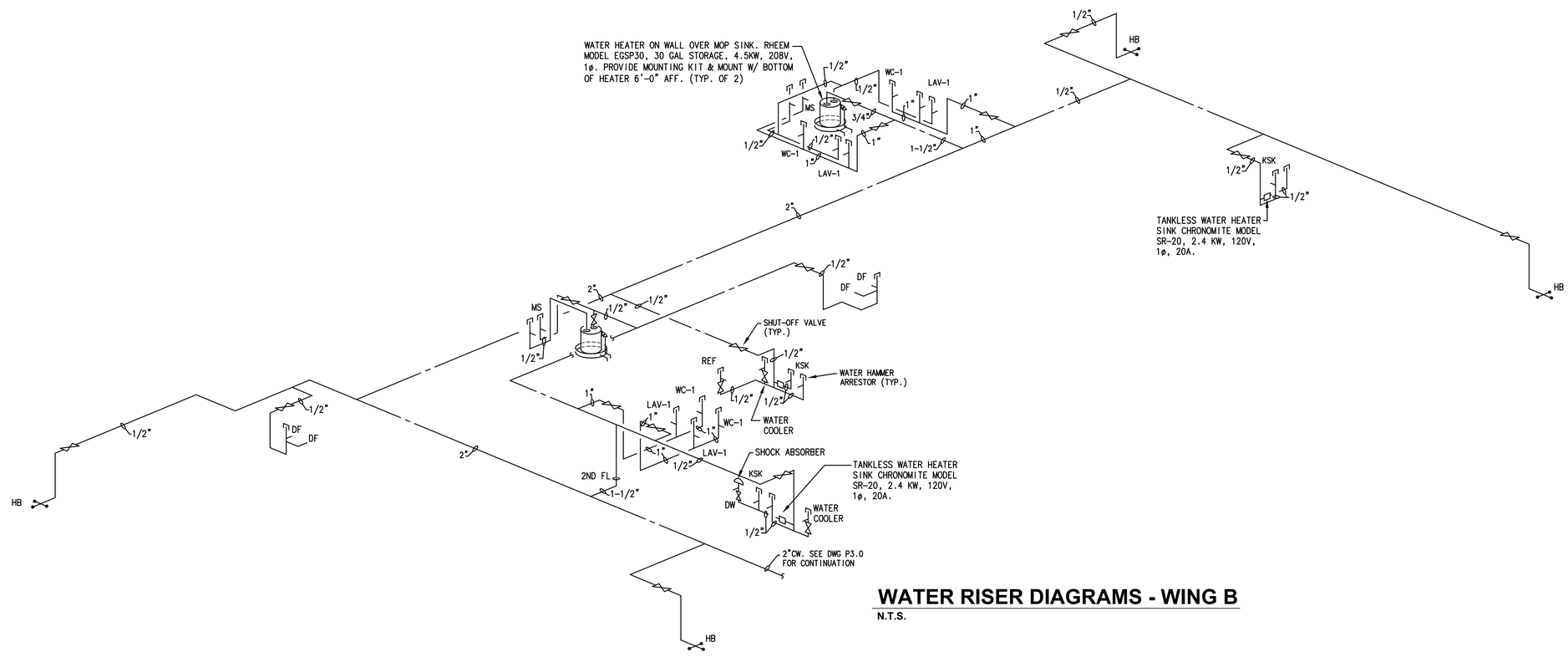

WATER RISER DIAGRAMS - WING B

N.T.S.

REVISIONS:

KEY WEST CITY HALL AT GLYNN ARCHER

1300 WHITE STREET KEY WEST, FLORIDA
CITY OF KEY WEST

EDWIN O. CERNA LICENSE No 69808 STATE OF FLORIDA PROFESSIONAL ENGINEER

EDWIN O. CERNA, P.E. (MECHANICAL)
FL REG. #0069808

M.E.P.FP. ENGINEER:

HNAGS ENGINEERS

HUFSEY, NICOLAIDES, GARCIA , SUAREZ CONSULTING ENGINEERS
4800 S.W. 74th Court Miami, Florida 33155
(305) 270-9935 Fax (305) 666-5891
HNGS # 13-0016
ENRIQUE J. SUAREZ, P.E. (MECHANICAL) FL REG.#0015794
CARLOS GARCIA, P.E. (ELECTRICAL) FL REG.#0014104

410 Angela Street
Key West, Florida 33040
Telephone (305) 296-1347
Facsimilie (305) 296-2727
Florida License AAC002022

Bender & Associates ARCHITECTS p.a.

Project N° 1305

PLUMBING RISERS DIAGRAMS

Date: 8/8/14

PERMIT SET

P4.2

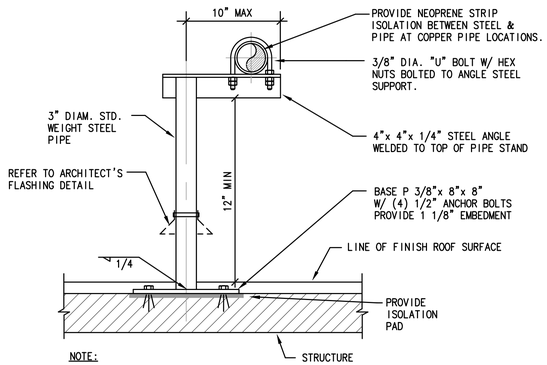

NOTE:
1. ALL STEEL TO BE HOT DIPPED GALVANIZED AFTER FABRICATION/ CUTTING.
2. ALL HARDWARE SHALL BE HOT DIPPED GALVANIZED.
3. MAXIMUM STAND SPACING TO BE 6'-0"

GAS/CONDENSATE/DOMESTIC WATER LINE PIPE SUPPORT DETAIL
N.T.S.

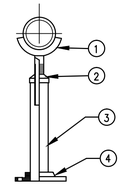

COMPONENTS
1. PIPE SADDLE SUBASSEMBLY (STEEL)
2. SPECIAL REDUCER (2"NPT X 1 1/2"-11 1/2 NPSM-M.I.)
3. PIPE (2" STEEL)
4. COMPANION FLANGE (2"X6"D.I.) ATTACHED TO CONCRETE FLOOR WITH EXPANSION BOLTS.

FLOOR MOUNTED PIPE SUPPORT DETAIL
N.T.S.

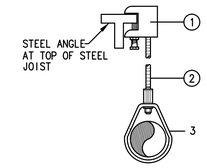

COMPONENTS
1. TOP BEAM CLAMP.
2. HANGER ROD 3/8"ø FOR PIPE 4"DIA. AND LESS, 1/2"ø FOR PIPE LARGER THAN 4"DIA.
3. ADJUSTABLE HANGER RING

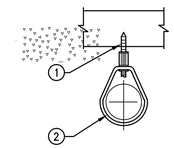

COMPONENTS
1. POWDER-DRIVEN STUD
2. ADJUSTABLE HANGER RING

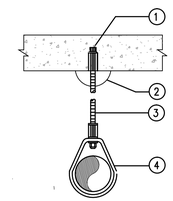

COMPONENTS
1. DROP-IN ANCHOR
2. SPRING CLIP CEILING PLATE (OPTIONAL)
3. HANGER ROD 3/8"ø FOR PIPE 4"DIA. AND LESS, 1/2"ø FOR PIPE LARGER THAN 4"DIA.
4. ADJUSTABLE HANGER RING

HANGER DETAILS
N.T.S.

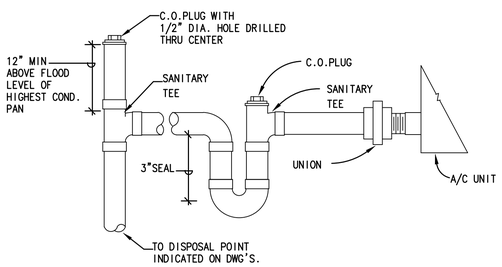

TYPICAL A/C UNIT CONDENSATE DRAIN CONN.
N.T.S.

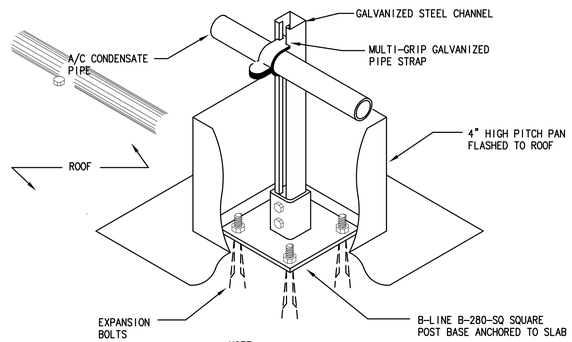

NOTE:
SUPPORT SPACING FOR PVC PIPING SHALL NOT EXCEED 6' FOR 3/4" THRU 1", 8' FOR 1 1/4" AND ABOVE.

TYPICAL CONDENSATE PIPE SUPPORT ON ROOF
N.T.S.

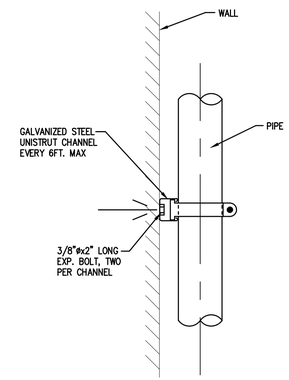

WALL MOUNTED DETAIL
N.T.S.

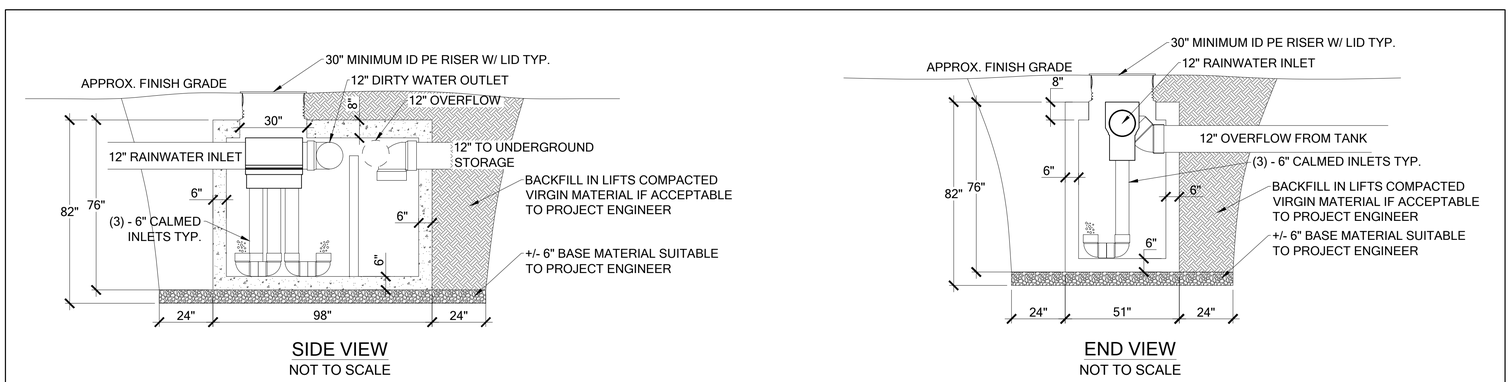

RAINWATER BALANCING VAULT WITH PRE FILTER
N.T.S.

REVISIONS:

KEY WEST CITY HALL AT GLYNN ARCHER
1300 WHITE STREET KEY WEST, FLORIDA
CITY OF KEY WEST

EDWIN O. CERNA LICENSE No 69808 STATE OF FLORIDA PROFESSIONAL ENGINEER
EDWIN O. CERNA, P.E. (MECHANICAL)
FL REG. #0069808

M.E.P.FP. ENGINEER:
HN&GS ENGINEERS
HUFSEY, NICOLAIDES, GARCIA , SUAREZ CONSULTING ENGINEERS
4000 S.W. 74th Court Miami, Florida 33155
(305) 270-9935 Fax (305) 666-5891
HNGS # 13-0016
ENRIQUE J. SUAREZ, P.E. (MECHANICAL) FL REG.#0053794
CARLOS GARCIA, P.E. (ELECTRICAL) FL REG.#0074164

410 Angela Street
Key West, Florida 33040
Telephone (305) 296-1347
Facsimilie (305) 296-2727
Florida License AAC002022
Bender & Associates ARCHITECTS p.a.

Project N° 1305
DETAILS
Date: 8/8/14

PERMIT SET

P4.3

CAJ 1205

2 Hour Fire Rated Through Penetration Firestop for Single Metal Pipe through Concrete Floors or Block Walls using TREMstop Acrylic.

F-Rating = 2 Hr.
T-Rating = 0 Hr.
L-Rating at Ambient - Less Than 1 CFM/sq. ft.
L-Rating at 400 F - Less Than 1 CFM/sq. ft.

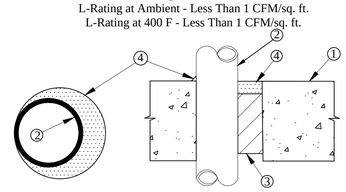

1. Pre-Rated Concrete Floors or Block Walls = Min. 4-1/2" thickness.
   The annular space range shall be min. 0" to max. 7/8" for this firestop system.
2. Metallic Pipe: > Steel Pipe - 12" diam. (or smaller) sch. 40 (or heavier) steel
   > Conduit - Nom. 4" diam. (or smaller) steel conduit, or EMT.
   > Copper Pipe - 3" diam. (or smaller) Regular (or heavier) copper.
   > Cast Iron Pipe - 12" diam. (or smaller) cast or ductile iron.
   > Copper Tubing - 3" diam. (or smaller) Type L (or heavier) copper.
3. Packing Material - Min. 4" thickness of mineral wool (min. 4.0 pcf) insulation, firmly packed into opening as a permanent form.
4. TREMstop Acrylic - Min. 1/2" sealant applied within annulus, and a minimum 1/4" sealant applied at point contact; at the floor surface for floors, or both surfaces for walls.

CAJ 1302

2 Hour Fire Rated Through Penetration Firestop for Single Metal Pipe through Concrete Floors or Walls using TREMstop IA.

F-Rating = 2 Hr.
T-Rating = 0 Hr.

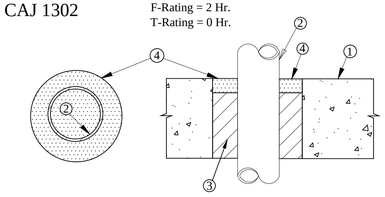

1. Pre-Rated Concrete Floors or Block Walls = Min. 4-1/2" thickness.
2. Metallic Pipe: A) Steel Pipe - 8" diam. (or smaller) Sch. 10 (or heavier) steel pipe.
   B) Iron Pipe - 8" diam. (or smaller) cast or ductile iron pipe.
   C) Conduit - 4" diam. (or smaller) EMT or steel conduit.
   D) Copper Tubing - 4" diam. (or smaller) Type L (or heavier) copper tubing.
   E) Copper Pipe - 4" diam. (or smaller) Regular (or heavier) copper pipe.
3. Packing Material- See table below for mineral wool insulation (min. 4.0 pcf) requirements.
4. TREMstop IA- See table below for minimum thickness of sealant. Apply sealant flush with top of floor surface or with both sides of the wall assembly.

Annular Space Range, in.	Min. Packing Material Thickness, in.	Min. Thickness of Sealant, in.	F-Rating Hr.
1/2 to 1-3/8	0	1	2
1/2 to 1-3/8	4	1/2	2

WL 1097

1 or 2 Hour Fire Rated Through Penetration Firestop for Single Metal Pipe through Gypsum Walls using FYRE-SHIELD.

F-Rating = 1 and 2 Hr.
T-Rating = 0 Hr.

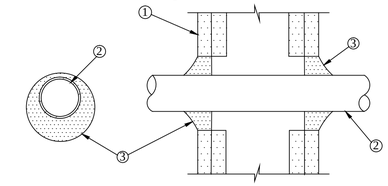

1. Pre-Rated Gypsum Wallboard/Stud Wall Assembly
2. Metallic Pipe - A) Steel Pipe - 8" diam. (or smaller) Sch. 40 (or heavier) steel pipe.
   B) Iron Pipe - 8" diam. (or smaller) cast or ductile iron pipe.
   C) Conduit - 4" diam. (or smaller) EMT or rigid steel conduit.
   D) Copper Tubing - 4" diam. (or smaller) Type L (or heavier) copper tubing.
   E) Copper Pipe - 4" diam. (or smaller) Regular (or heavier) copper pipe.
   The annular space shall be min. 1/4" to max. 5/8" within the firestop system.
3. FYRE-SHIELD - Min. 1/2" thickness of sealant applied within opening. Additional sealant to be installed such that a min. 1/4" crown is formed around the penetrating item.

CAJ 5121

2 Hour Fire Rated Through Penetration Firestop for Insulated Metal Pipe through Concrete Floors or Walls using TREMstop IA.

F-Rating = 2 Hr.
T-Rating = 1/2 & 1 Hr.

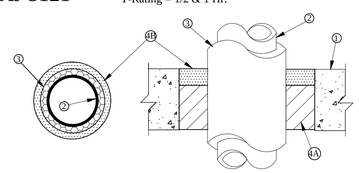

1. Pre-Rated Concrete Floor or Wall Assembly = Min. 4-1/2" thickness
2. Metallic Pipe- A) Copper Tubing- Nom. 4" diam. (or smaller) Type L (or heavier) copper tubing.
   B) Copper Pipe - Nom. 4" diam. (or smaller) Regular (or heavier) copper pipe.
   C) Steel Pipe- Nom. 4" diam. (or smaller) Sch. 10 (or heavier) steel pipe.
   D) Iron Pipe - Nom. 4" diam. (or smaller) cast iron pipe.
   E) Conduit - Nom. 4" diam. (or smaller) EMT or steel conduit.
3. Pipe Covering - Fiberglass insulation, see table below for thickness and annular space.

Max. Pipe Diam., in.	Pipe Covering Thickness, in.	Annular Space in.	Packing Material Thickness, in.	Min. Sealant Thickness, in.	F-Rating Hr.	T-Rating Hr.
4	1	1/2 to 1	0	1	2	1/2
4	2	1/2 to 1-1/2	3-1/2	1	2	1

4A. Packing Material - Mineral wool insulation (min. 4.0 pcf) firmly packed into opening to the minimum required thickness in the table above.

4B. TREMstop IA- Min. thickness of sealant as specified in table above, applied within opening flush with top surface of floor or both surfaces of wall.

WL 5081

2 Hour Fire Rated Through Penetration Firestop for Insulated Metal Pipe through Gypsum Walls using TREMstop IA.

F-Rating = 2 Hr.
T-Rating = 1/2 Hr.

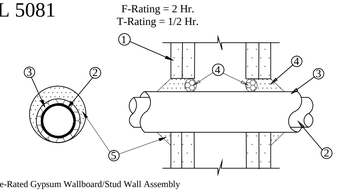

1. Pre-Rated Gypsum Wallboard/Stud Wall Assembly
2. Metallic Pipe - A) Steel Pipe - Nom. 4" diam. (or smaller) Sch. 10 (or heavier) steel pipe.
   B) Iron Pipe- Nom. 4" diam. (or smaller) cast or ductile iron pipe.
   C) Copper Tubing - Nom. 4" diam. (or smaller) Type L (or heavier) copper tubing.
   D) Copper Pipe - Nom. 4" diam. (or smaller) Regular (or heavier) copper pipe.
   E) Conduit- Nom. 4" diam. (or smaller) EMT or steel conduit.
3. Pipe Covering - Nom. 3/4" thick (or less) AB/PVC flexible foam insulation.
   The annular space shall be min. 0" to max. 3/8".
4. Packing Material (optional)- Foam backer rod firmly placed into opening as a permanent form.
5. TREMstop IA - Min. 1" thickness of sealant applied within annulus flush with both sides of wall assembly. At point contact a min. 5/8" bead of sealant shall be installed at the wallboard/insulation interface. A 5/8" crown of sealant shall be formed around the penetrating item.

WL 2064

1 or 2 Hour Fire Rated Through Penetration Firestop for Single Plastic Pipe through Gypsum Walls using TREMstop WBM.

3735 Green Rd.
Beachwood, OH, 44122

Drawing not to scale

F-Rating = 1 and 2 Hr.
T-Rating = 1 and 1-1/2 Hr.

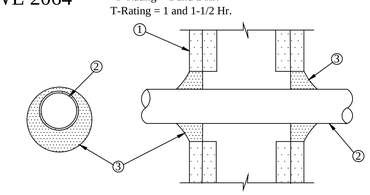

1. Pre-Rated Gypsum Wallboard/Stud Wall Assembly
   The hourly T-Rating is 1-1/2 Hr when system is installed in a 2 Hr fire-rated wall.
   The hourly T-Rating is 1 Hr when system is installed in a 1 Hr fire-rated wall.
2. Plastic Pipe - Nom 2" diam. (or smaller) CPVC pipe for use in closed piping systems.
   The annular space shall be min. 1/4" to max. 1-3/8" within the firestop system.
3. TREMstop WBM - Min. 1/2" thickness of sealant applied within opening. Additional sealant to be installed such that a min. 1/4" crown is formed around the penetrating item.

FIRE STOPPING DETAILS

N.T.S.

NOTE:

1. PROVIDE PLANED SQUARE ENDS PROJECTING 2" ABOVE THE FLOOR FOR ALL SLEEVES THROUGH FLOORS.

2. MAKE SLEEVES PASSING THROUGH WALLS OR BEAMS FLUSH WITH ADJACENT SIDES.

3. PROVIDE FIRESTOPPING COMPONENTS WHICH RELY ON PRODUCTS NOT EXCEEDING VOLATILE ORGANIC COMPOUND (VOC) CONTENT OF 250g/L AS REQUIRED BY SPECIFICATION 016116 – (VOC CONTENT RESTRICIONS) AND SCAQMD RULE 1168; FOR COMPLIANCE WITH LEED NC v2009 INDOOR ENVIRONMENTAL QUALITY CREDIT 4.1 – LOW EMITTING MATERIALS – ADHESIVES AND COATINGS.

PLUMBING FIRE STOP DETAILS

SCALE: N.T.S.

REVISIONS:

KEY WEST CITY HALL
AT GLYNN ARCHER
1300 WHITE STREET KEY WEST, FLORIDA
CITY OF KEY WEST

EDWIN O. CERNA LICENSE No 69808 STATE OF FLORIDA PROFESSIONAL ENGINEER
EDWIN O. CERNA, P.E. (MECHANICAL)
FL REG. #0069808

M.E.P.FP. ENGINEER:
HN&GS ENGINEERS
HUFSEY, NICOLAIDES, GARCIA , SUAREZ CONSULTING ENGINEERS
6800 S.W. 74th Court Miami, Florida 33155
(305) 270-9935 Fax (305) 666-5891
HNGS # 13-0016
☐ ENRIQUE J. SUAREZ, P.E. (MECHANICAL) FL REG.#0057764
☐ CARLOS GARCIA, P.E. (ELECTRICAL) FL REG.#0014328

410 Angela Street
Key West, Florida 33040
Telephone (305) 296-1347
Facsimilie (305) 296-2727
Florida License AAC002022
Bender & Associates ARCHITECTS p.a.

Project N º 1305
DETAILS
Date: 8/8/14

PERMIT SET

P4.4

GENERAL ELECTRICAL NOTES

1.a)ALL WORK SHALL BE IN ACCORDANCE WITH THE CURRENT ADOPTED EDITION OF THE NATIONAL ELECTRICAL CODE, FLORIDA BUILDING CODE AND OTHER APPLICABLE CODES AND STANDARDS.

1.b)IT IS THE CONTRACTORS RESPONSIBILITY TO BE FULLY COGNIZANT WITH ALL CODE SECTIONS AS THEY APPLY TO THE WORK/INSTALLATION AT HAND WHETHER OR NOT SHOWN ON THE DRAWINGS BUT REQUIRED BY CODE. IF ANY DISCREPANCY ARISES BETWEEN ANY DESIGN ISSUES AND CODE REQUIREMENTS, CONTRACTOR MUST ADHERE TO THE MOST STRINGENT APPROACH.

2.a) THE DRAWINGS ARE DIAGRAMMATIC AND DO NOT SHOW ALL OFFSETS, BENDS AND BOXES REQUIRED TO MAKE A COMPLETE NEAT INSTALLATION IN ACCORDANCE WITH N.E.C.

2.b) WHEN CONFLICTS ARISE IN LOCATIONS WIRING DEVICES, ELECTRICAL EQUIPMENT, DISCONNECTS, PANELBOARDS ETC. DUE TO FIELD CONDITION OR IMPROPER FIELD COORDINATION CONTRACTOR SHALL BRING IT TO THE A/E's ATTENTION AND AT NO EXTRA COST RELOCATE, AND OR EXTEND WITHIN A REASONABLE DISTANCE SUCH ITEM WHICH IS IN CONFLICT. THE CONTRACTOR IS RESPONSIBLE FOR COORDINATING LOCATION OF ALL COMPONENT PRIOR TO ROUGH-IN WITH ALL TRADES- NO EXTRAS WILL BE ALLOWED FOR FAILURE TO DO SO.

3. THE CONTRACTOR IS RESPONSIBLE FOR EVALUATING FIELD CONDITIONS BY VISITING THE SITE PRIOR TO COMMENCING/BIDDING WORK.

4. CONTRACTOR IS RESPONSIBLE FOR FURNISHING AND INSTALLING ALL ELECTRICAL SYSTEM COMPONENTS SUCH AS LUMINAIRES, WIRING DEVICES, APPLIANCES, CONTROLS SHOWN ON THE ARCHITECTURAL OR MECHANICAL DRAWINGS.

5. THE CONTRACTOR SHALL SATISFACTORILY REPAIR/REPLACE EQUIPMENT OR PART OF STRUCTURE DAMAGED AS A RESULT OF HIS WORK. SURFACES AND FINISHED AREAS SHALL BE RESTORED TO MATCH ADJACENT AREAS.

6. APPROVAL SHALL BE OBTAINED FROM THE ENGINEER PRIOR TO CUTTING OR DRILLING ANY STRUCTURAL SUPPORT MEMBER.

7. a) ALL DEVICE BOXES SHALL BE INSTALLED FLUSH AND CONDUITS RUN CONCEALED IN FINISHED AREAS EXCEPT AS SPECIFICALLY SHOWN/NOTED OTHERWISE.
   b) ALL DEVICES INSTALLED OUTDOORS TO HAVE WEATHERPROOF COVERS.

8. ALL ELECTRICAL EQUIPMENT SHALL BE REMOVED FROM STRUCTURE TO BE REMOVED. ACCESSIBLE RACEWAYS, WIRES, BOXES, SWITCHES AND OTHER ELECTRICAL ITEMS ASSOCIATED WITH THIS WORK SHALL BE REMOVED IF NOT REQUIRED FOR NEW EQUIPMENT TO CONTINUE IN SERVICE.

9. WIRE SHALL BE REMOVED BACK TO SOURCE FROM INACCESSIBLE RACEWAYS NOT REUSED. INSTALL BLANK PLATES ON FLUSH OUTLETS NOT REUSED. PLATE COLOR SHALL MATCH ADJACENT SURFACE AS NEAR AS POSSIBLE IN FINISHED AREAS.

10. INSTALL POWER AND CONTROL WIRING (INCLUDING CONDUITS AND BOXES) AND REQUIRED CONTROL COMPONENTS FOR AIR CONDITIONING SYSTEMS AS SHOWN/NOTED ON THESE DRAWINGS AND PER OTHER APPLICABLE DRAWINGS/INSTRUCTIONS. SEE AIR CONDITIONING DRAWINGS.

11. ALL MATERIAL REMOVED SHALL BE DISPOSED OF AS DIRECTED BY OWNER.

12. WIRE SIZE SHALL BE #12 THHN/THWN UNLESS OTHERWISE NOTED ON PLANS. CONDUCTORS #6 AND LARGER SHALL BE THWN.

13. ALL CONDUCTORS SHALL BE COPPER.

14. ALL CONDUCTORS SHALL BE RUN IN CONDUIT (METALLIC TYPE). IF PVC SCHEDULE 40 IS USED FOR UNDERGROUND FEEDERS ONLY, AN EQUIPMENT GROUND CONDUCTOR SIZED IN ACCORDANCE WITH N.E.C. 250-122 MUST BE INSTALLED AND CONDUIT SIZE INCREASED AS REQUIRED.

15. ALL MATERIALS SHALL BE U. L. APPROVED.

16. NEW TYPEWRITTEN PANEL TALLY SHALL BE FURNISHED AFTER JOB IS COMPLETED REFLECTING ALL CHANGES AND ADDITIONS.

17. ALL BRANCH CIRCUITS SHALL BE PROPERLY PHASE BALANCED.

18. CONTRACTOR SHALL SEAL ALL FLOOR OPENINGS WITH A LOW OR ZERO VOC FIRESTOPPING SEALANT APPROVED FOR USE PER UL ASSEMBLY.

19. ALL NON-POWER RELATED WIRING IN CEILING AIR CONDITIONING PLENUM RUNNING WITHOUT CONDUIT SHALL BE TEFLON COATED CLASSIFIED FOR USE IN PLENUMS.

20. PROVIDE TRAPEZE HANGER ASSEMBLE FOR PLENUM COMMUNICATION CABLES WITH 3/8" DIAMETER. THREADED ROD AND CHANNEL ASSEMBLY TO SUPPORT CABLE BUNDLES EVERY 4 FT. O.C. (MAXIMUM CABLES TO BE PROPERLY STRAPPED WITH SELF-LOCKING CABLE TIES. EXPOSED CABLES SHALL NOT LIE ON TOP OF CEILING TILE OR LUMINAIRES.

21. ALL DATA EQUIPMENT TO BE FED BY A DEDICATED CIRCUIT WHICH CONSISTS OF A POWER CIRCUIT THAT FEEDS THIS TYPE OF EQUIPMENT ONLY WITH A SEPARATE GREEN GROUNDING CONDUCTOR CARRIED ALL THE WAY BACK TO THE PANEL TO BE CONNECTED TO THE GROUNDING SYSTEM.

22. SEE ARCHITECTURAL DRAWINGS FOR INFORMATION CONCERNING EXISTING CONDITIONS, NEW WORK AND COUNTER DETAILS.

23. a)ALL WIRING DEVICES TO BE SPECIFICATION GRADE WITH NYLON COVER PLATES EQUAL TO LUTRON CONTROLLER (SWITCHES); LEVITON COMMERCIAL GRADE (RECEPTACLES).
   b)ALL WIRING DEVICES INSTALLED IN KITCHEN COUNTERS, LAVATORIES AND EXTERIOR TO BE GFI.

24. LIGHT SWITCHES OPERATING CIRCUITS OTHER THAN 120V SHALL NOT BE GANGED IN SAME BOX UNLESS SWITCHES ARE CONNECTED TO SAME CIRCUIT.

25. ALL BRANCH CIRCUITS TO HAVE A GREEN EQUIPMENT GROUNDING CONDUCTOR SIZED AS PER N.E.C. 250.122.

26. ALL EMPTY CONDUITS TO BE PROVIDED WITH NYLON PULL STRINGS.

27. FUSES SHALL BE DUAL ELEMENT, TIME DELAY TYPE UNLESS OTHERWISE NOTED.

28. A/C EQUIPMENT WIRING, BREAKER AND FUSE SIZES ARE BASED ON A/C EQUIPMENT SPECIFIED ON CONTRACT DRAWINGS. CONTRACTOR IS RESPONSIBLE FOR PROVIDING ALL WIRING, BREAKER AND FUSES SIZES IN ACCORDANCE WITH A/C EQUIPMENT NAMEPLATE REQUIREMENTS IF DIFFERENT FROM THAT SPECIFIED ON DRAWINGS, AS WELL AS ANY FEEDER CHANGES BEING AFFECTED BY THIS CHANGE. CONTRACTOR SHALL MAKE ABOVE MENTIONED CHANGES AT NO EXTRA COST.

29. CONTRACTOR SHALL COORDINATE ALL HIS WORK WITH OTHER TRADES IN ORDER TO FURNISH AND INSTALL ALL CONTROL WIRING AND RACEWAYS, ALL POWER CONTROL CIRCUITS WIRING AND RACEWAYS AS SHOWN ON THE AIR CONDITIONING DRAWINGS OR SPECIFICATIONS. IF AIR CONDITIONING DRAWINGS REFER TO MANUFACTURER'S WIRING DIAGRAMS, THE CONTRACTOR SHALL VERIFY WITH SAID MANUFACTURER ALL REQUIREMENTS AND INCLUDE ALL RELATED WORK IN HIS CONTRACT.

30. ALL LUMINARIES SHALL BE PROPERLY SUPPORTED IN ACCORDANCE WITH THE CEILING SYSTEM MANUFACTURER RECOMMENDATIONS AND LOCAL CODE REQUIREMENTS.

31. RISERS ARE DIAGRAMMATIC ONLY. THEY DO NOT SHOW EVERY BEND REQUIRED FOR THE INSTALLATION.

32. THIS DRAWING IS A GUIDE FOR THE INSTALLATION OF ELECTRICAL SERVICE. THE ELECTRICAL CONTRACTOR IS RESPONSIBLE TO PROVIDE A FUNCTIONING SYSTEM.

33. ALL CABLES SHALL BE RUN WITHOUT SPLICES EXCEPT OTHERWISE INDICATED.

34. ALL PULL AND JUNCTION BOXES SHALL BE ACCESSIBLE AT ALL TIMES.

35. EXACT POINT AND METHODS OF CONNECTION SHALL BE DETERMINED IN FIELD.

36. ALL WORK SHALL BE DONE IN A NEAT AND WORKMANLIKE MANNER.

37. ALL PANELBOARDS SHALL HAVE COPPER BUS AND BRANCH CIRCUIT BREAKERS SHALL BE OF THE BOLT-ON TYPE. PLUG-IN CIRCUIT BREAKERS WILL NOT BE ACCEPTED.

38. ALL RACEWAY ROUTED, INSULATED CONDUCTORS SYSTEM SHALL BE COLOR CODED AS FOLLOWS:

120/208V SYSTEM	
PHASE 'A'	BLACK
PHASE 'B'	RED
PHASE 'C'	BLUE
NEUTRAL	WHITE
GROUND	GREEN

39. SUBMIT DETAILED LAYOUT OF ALL MECHANICAL ROOMS WITH EQUIPMENT REQUIRING ELECTRICAL SERVICE. LAYOUT SHALL SHOW PROPOSED LOCATION OF ELECTRICAL SERVICE ITEMS SUCH AS DISCONNECTS, RELAYS, PANELBOARDS, ETC. AND DIMENSIONS SHOWING CODE CLEARANCES TO ADJACENT SURFACES.

40. ALL ROUGH-IN DIMENSIONS ARE TO CENTER LINE OF DEVICE UNLESS OTHERWISE NOTED.

41. ALL EXTERIOR SURFACE MOUNTED LUMINAIRES, POSTS, POST TOPS, POLES AND AREA LIGHTING LUMINAIRES TO HAVE FINISH COLOR TO MATCH ARCHITECTURAL WINDOW FRAME COLOR UNLESS OTHERWISE SPECIFICALLY NOTED.

42. ALL PULL BOXES, HAND HOLES AND MAN HOLES TO HAVE COVER PLATE BOLTED TO FRAME AND BONDED TO THE EQUIPMENT GROUND SYSTEM.

43. CONTRACTOR SHALL INCLUDE IN HIS BID ALL COSTS RELATED TO THE FBC WIND LOAD COMPLIANCE, THE CERTIFICATION OF THE EXTERIOR POLE/LUMINAIRE ASSEMBLIES BY A STRUCTURAL ENGINEER.

44. ALL CONDUCTOR SPLICES IN EXTERIOR LOCATED JUNCTION/PULL BOXES EXPOSED TO THE WEATHER TO BE WEATHER SEALED BY USING AN APPROVED METHOD SUCH AS 3M SCOTCHLOCK CONNECTOR EPOXY SEALING PACKS OR SIMILAR.

45. a)WHEN THERE IS CONFLICT AS TO OPTIONS TO PERFORM A GIVEN TASK CONTRACTOR SHALL CHOOSE THE MOST COSTLY IN NATURE IN ORIGINAL BID.
   b)WHEN ITEMS ARE REQUIRED BY LOCAL OR NATIONAL CODES CONTRACTOR SHALL INCLUDE THEM WHETHER SHOWN ON THE DRAWINGS OR NOT.

46. CONTRACTOR TO PROVIDE 1/2" CONDUIT AND OUTLET BOX FOR ALL THERMOSTATS LOCATED IN THE A/C DRAWINGS. CONDUIT TO RUN FROM THERMOSTAT LOCATED TO RESPECTIVE A/C UNIT.

47. LUMINAIRES CONSISTING OF CONTINUOUS SECTIONS EITHER MECHANICALLY/ELECTRICALLY ATTACHED FROM FACTORY OR A ONE SOLID PIECE SHALL BE 1LENGTH AS SCALEDφ. ANY DISCREPANCY BETWEEN THE LIGHTING FIXTURE SCHEDULE AND THE DRAWINGS MUST BE BROUGHT TO THE ENGINEER'S ATTENTION PRIOR TO ORDERING.

48. ANY DISCREPANCY BETWEEN ANY OF THE LUMINAIRES CHARACTERISTICS, SUCH AS VOLTAGE, MOUNTING, NUMBER OF LAMPS, LOCATION RATING, ETC., AS INDICATED IN THE LIGHTING FIXTURE SCHEDULE AND AVAILABILITY MUST BE BROUGHT TO THE ENGINEER'S ATTENTION PRIOR TO ORDERING.

49. a)ALL 120/277V BRANCH CIRCUITS SHALL BE INSTALLED WITH INDIVIDUAL NEUTRAL CONDUCTORS PER PHASE UNLESS INSTALLED AS PER METHOD ON NOTE #59b.
   b)IF MULTIWIRE BRANCH CIRCUITS (TWO OR THREE POLE BRANCH CIRCUITS SHARING A COMMON NEUTRAL CONDUCTOR) ARE INSTALLED AT CONTRACTOR'S OPTION, ALL UNGROUNDED CONDUCTORS SHALL BE SIMULTANEOUSLY DISCONNECTED BY PROVIDING 2 POLE OR 3 POLE CIRCUIT BREAKER OR SINGLE POLE BREAKERS WITH APPROVED HANDLE TIES AS REQUIRED PER N.E.C. 210.4.

REVISIONS:

KEY WEST CITY HALL
AT GLYNN ARCHER

1300 WHITE STREET KEY WEST, FLORIDA
CITY OF KEY WEST

ANTHONY A. SCHULZ LICENSE No 60762 STATE OF FLORIDA PROFESSIONAL ENGINEER

ANTHONY A. SCHULZ, P.E. (ELECTRICAL)
FL REG.#0060762

M.E.P.FP. ENGINEER:

HNGS ENGINEERS
HUFSEY, NICOLAIDES, GARCIA , SUAREZ
CONSULTING ENGINEERS
4800 S.W. 74th Court Miami, Florida 33155
(305) 270-9935 Fax (305) 666-5891
HNGS # 13-0016
☐ ENRIQUE J. SUAREZ, P.E. (MECHANICAL) FL REG.#0015794
☐ CARLOS GARCIA, P.E. (ELECTRICAL) FL REG.#0014104

410 Angela Street
Key West, Florida 33040
Telephone (305) 296-1347
Facsimilie (305) 296-2727
Florida License AAC002022

Bender & Associates ARCHITECTS *p.a.*

Project N º 1305

GENERAL NOTES

Date: 8/8/14

PERMIT SET

E0.0

ELECTRICAL SYMBOL LEGEND

SYMBOL	DESCRIPTION
	2X2 LIGHTING FIXTURE
	LIGHTING FIXTURE, BARE STRIP
	LIGHTING FIXTURE CEILING OR WALL MOUNTED.
$a	SINGLE-POLE TOGGLE SWITCH, 20A-125/277V, +48", SWITCH "a"
$3	THREE-WAY TOGGLE SWITCH, 20A-125/277V, +48"
$D	DIMMER SWITCH, 125V, +48"
$K	SINGLE POLE KEY TOGGLE SW. 20A, 125/277V, +48"
	DUPLEX RECEPTACLE OUTLET, 15A-125V, 3 WIRE, +18"
J	JUNCTION BOX
AFF	DENOTES ABOVE FINISHED FLOOR
	DATA OUTLET WALL MOUNTED, +18" (UNLESS OTHERWISE NOTED)
	TELEPHONE/DATA OUTLET WALL MOUNTED, +18" (UNLESS OTHERWISE NOTED)
	MOTOR, SIZE AS INDICATED
	MOTOR STARTER OR CONTROLLER
30/20 3 F	DISCONNECT SWITCH; 3-NUMBER OF POLES; 30-RATING; 20-FUSE SIZE; F-FUSE SIZE AS PER EQUIPMENT MANUFACTURER
	LIGHTING OR GENERAL PANELBOARD (FLUSH OR SURFACE AS SHOWN)
	DISTRIBUTION AND/OR POWER PANELBOARD OR GUTTER
	CONDUIT RUN CONCEALED IN WALL OR CEILING
3R	DENOTES 'RAINTIGHT' EQUIPMENT
WR	DENOTES 'WEATHER RESISTANT' EQUIPMENT
WP	DENOTES 'WEATHERPROOF' EQUIPMENT
	DENOTES NIGHT LIGHT FIXTURE
IG	LIGHT FIXTURES WITH BATTERY PACK TO BE OPERATE ONE LAMP UNDER POWER FAILURE. LT FIXTURES SHALL BE WIRED AS A SWITCHABLE UNIT (CAN BE TURNED ON AND OFF). BATTERY TO BE CONNECTED AHEAD OF SWITCHING ARRANGEMENT IN ORDER TO KEEP BATTERY CHARGED.
TV	TV OUTLET WITH F CONNECTOR HEIGHT AS DENOTED ON PLAN.
	WALL MOUNTED TELEPHONE OUTLET, +54" AFF
	QUADRUPLEX RECEPTACLE OUTLET, 20A, 125V, 3W
GFI	GROUND FAULT INTERRUPTER RECEPTACLE OUTLET 20A, 125V, 3W
1	DENOTES CODED NOTE #1. SEE FLOOR PLANS
	EXIT LIGHT FIXTURE(CLG MTD) WITH BATTERY PACK. ARROWS & FACES AS INDICATED ON DWG
	EXIT LIGHT FIXTURE(WALL MTD) WITH BATTERY PACK. ARROWS AS INDICATED ON DWG
RGC	RIGID GALVANIZED CONDUIT
EC	EMPTY CONDUIT
SW	SWITCH
AFF	ABOVE FINSHED FLOOR
CLG	CEILING
	DUPLEX RECEPTACLE OUTLET, ONE SIDE SWITCHED. 20A, - 125V,3W,+18"
A	DENOTES LIGHT FIXTURE TYPE AS CALLED FOR ON LTG. FIXT. SCHED.
(N)	DENOTES NEW EQUIPMENT
(E)	DENOTES EXISTING EQUIPMENT
(R)	DENOTES RELOCATED EQUIPMENT
HPF	HIGH POWER FACTOR (98PF)
UON	UNLESS OTHERWISE NOTED.
IG	ISOLATED GROUND
MTD	MOUNTED
FA	FIRE ALARM EQUIPMENT
3R	NEMA '3R' ENCLOSURE (RAINTIGHT)
NFPA	NATIONAL FIRE PROTECTION ASSOCIATION
N.I.C	NOT IN CONTRACT
M.L.O	MAIN LUG ONLY
DISC	DISCONNECT SWITCH
MB	MAIN CIRCUIT BREAKER
BKBD	BACKBOARD
T	TELEPHONE EQUIPMENT
JB	JUNCTION BOX
TV	TV EQUIPMENT
NEC	NATIONAL ELECTRICAL CODE
REC	RECEPTACLE
OHT	OVERHEAD TELEPHONE LINES
OHE	OVERHEAD ELECTRICAL LINES
UGE	UNDERGROUND ELECTRICAL/CONDUIT SERVICE FEEDERS
UGT	UNDERGROUND TELEPHONE/CONDUIT SERVICE
	SINGLE RECEPTACLE OUTLET, 20A,125V,+18" UNLESS OTHERWISE NOTED
G IG	DENOTES BRANCH CIRCUIT HOME RUN. SHORT TICKS DENOTES NUMBER OF CIRCUITS, LONG TICK-NEUTRAL, IG-ISOLATED GROUND CONDUCTOR, G-GROUND CONDUCTOR
	FLEXIBLE CONDUIT
IG	20A, 125V,3W ISOLATED GND DUPLEX RECEPTACLE (ORANGE)
	EMERGENCY BATTERY LIGHT

FOR FIRE ALARM DEVICES REFER TO SHEET E6.3 FOR FIRE ALARM SYMBOL LEGEND

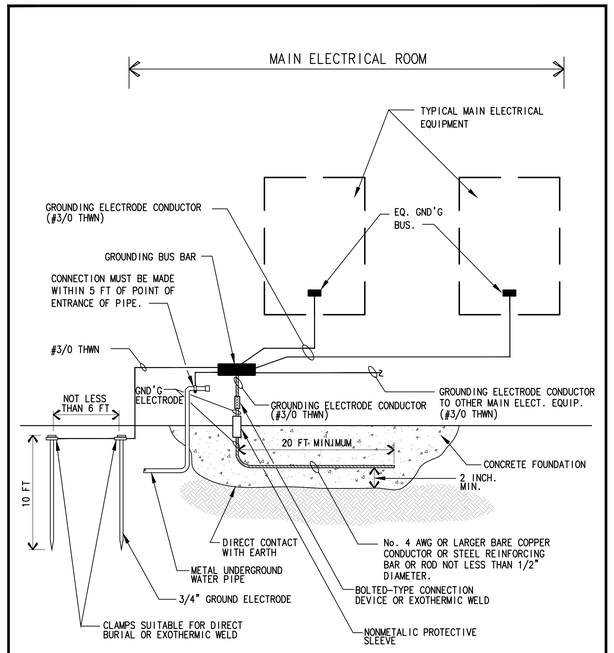

GROUNDING DETAIL

N.T.S.

LIGHTING CONTROLS - LEGEND

OS	WIRELESS CEILING MOUNTED OCCUPANCY SENSOR - LUTRON MODEL # LRF2-OCR2B-P-WH
DL	WIRELESS CEILING MOUNTED DAYLIGHT SENSOR - LUTRON MODEL # LRF2-DCRB-WH
$P2	WIRELESS PICO (LIGHTS) WALL SWITCH - LUTRON MODEL # PJ-2B-GWH-I01
$P3	WIRELESS PICO (LIGHTS) WALL DIMMER - LUTRON MODEL # PJ-3BRL-GWH-I01
KP	LIGHTING KEYPAD - LUTRON MODEL # QSWS2-5RLN-WH-EGN
KS	SHADE KEYPAD - LUTRON MODEL # QSWS2-2RLDN-WH-E01
ESN ECO	ENERGY SAVER NODE ECOSYSTEM - LUTRON MODEL # QSN-2-ECO-S
ESN SW	ENERGY SAVER NODE SOFTSWITCH - LUTRON MODEL # QSN-4S16-S
QSS	QS SHADE PANEL - LUTRON MODEL # QSPS-P1-10-60
$OS	MAESTRO IN-WALL OCCUPANCY SENSOR SWITCH- LUTRON MODEL # MS-OPS6M2-DV-WH 6 A LIGHTING, 3 A FAN (1/10 HP MOTOR)120 V ONLY, NO NEUTRAL WIRE, OCCUPANCY/VACANCY 120-277V NEUTRAL WIRED MODEL ALSO AVAILABLE

1 OR 2 HOUR FIRE RATED THROUGH PENETRATION FIRESTOP FOR SINGLE METAL PIPE THROUGH GYPSUM WALLS USING FYRE - SHIELD.

F-RATING = 1 AND 2 HR.
T-RATING = 0 HR.
UL # WL1051

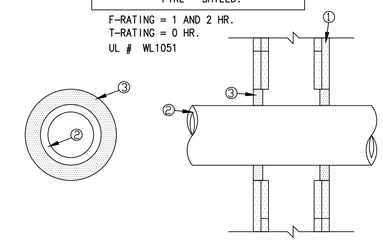

① 1 OR 2 - HOUR FIRE RATED GYPSUM WALLBOARD/STUD ASSEMBLY (ANGULAR SPACE RANGE, MIN. 1/4" TO MAX. 5/8")
② CONDUIT - 4" DIAM.(OR SMALLER) EMT OR RIGID STEEL
③ TREMCO # FYRE-SHIELD - MIN. 1/2" THICKNESS OF SEALANT INSTALLED WITHIN OPENING WITH A MIN. OF 1/4" CROWN AROUND GROUND THE PENETRATING ITEM APPLIED FLUSH WITH BOTH SIDE OF WALL ASSEMBLY.

2 HOUR FIRE RATED THROUGH PENETRATION FIRESTOP FOR SINGLE METAL PIPE THROUGH CONCRETE FLOORS OR BLOCK WALLS USING TREMSTOP ACRYLIC.

F-RATING = 2 HR.
T-RATING = 0 HR.
UL # CAJ1205

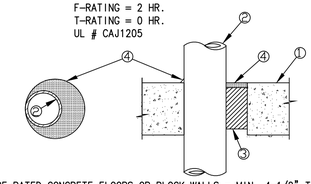

① PRE-RATED CONCRETE FLOORS OR BLOCK WALLS = MIN. 4-1/2" THICK, WITH ANNULAR SPACE RANGE OF 0" TO 7/8".
② CONDUIT - NOM. 4" DIA. (OR SMALLER) STEEL CONDUIT OR EMT.
③ PACKING MATERIAL - MINERAL WOOL (MIN. 4 PCF) COMPRESSED MIN. 50% AND INSTALLED INTO THE OPENING TO OBTAIN MIN. 4" THICKNESS.
④ TREMCO # TREMSTOP ACRYLIC - MIN. 1/2" SEALANT APPLIED WITHIN ANNULUS, AND A MINIMUM 1/4" SEALANT APPLIED AT POINT CONTACT: AT THE FLOOR SURFACE FOR FLOORS, OR BOTH SURFACES FOR WALLS.

Firestopping Materials with Volatile Content;
Provide Firestopping components which rely on products not exceeding volatile organic compound (VOC) content of 250g/L as required by Specification 01616 - (VOC Content Restrictions) and SCAQMD Rule 1168; for compliance with LEED NC v2009 Indoor Environmental Quality credit 4.1 - Low Emitting Materials - Adhesives and Coatings.

FIRE AND/OR SMOKE RATED WALL OR FLOOR PENETRATION DETAILS

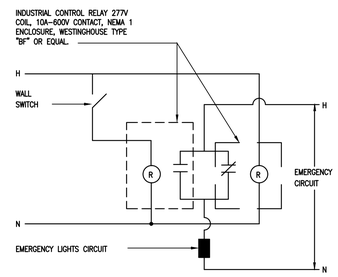

EMERGENCY TRANSFER SCHEME (TYPICAL)

N.T.S.

X:\EDETAILS\EMLTGTRA2.DWG

DETAIL TO BE USED WHEN EMERGENCY LIGHTS ARE TO BE CONTROLLED BY INDEPENDENT LIGHT SWITCH FED BY NORMAL POWER. UPON LOSS OF NORMAL POWER, EMERGENCY LTS SHALL COME ON AUTOMATICALLY REGARDLESS OF SWITCH POSITION

REVISIONS:

KEY WEST CITY HALL AT GLYNN ARCHER

1300 WHITE STREET KEY WEST, FLORIDA
CITY OF KEY WEST

ANTHONY A. SCHULZ LICENSE No 60762 STATE OF FLORIDA PROFESSIONAL ENGINEER

ANTHONY A. SCHULZ P.E. (ELECTRICAL)
FL REG.#0060762

M.E.P.FP. ENGINEER:

HINGS ENGINEERS

HUFSEY, NICOLAIDES, GARCIA , SUAREZ CONSULTING ENGINEERS
8950 S.W. 74th Court Miami, Florida 33155
(305) 270-9835 Fax (305) 666-5891
HNGS # 13-0018
ENRIQUE J. SUAREZ, P.E. (MECHANICAL)
FL REG.#0015734
ALEJO G. GARCIA, P.E. (ELECTRICAL)
FL REG.#0054104

410 Angela Street
Key West, Florida 33040
Telephone (305) 296-1347
Facsimilie (305) 296-2727
Florida License AAC002022

Bender & Associates ARCHITECTS *p.a.*

Project N º 1305

LIGHTING FIXTURE SCHEDULE AND DETAILS

Date: 8/8/14

PERMIT SET

E0.1

INTERIOR LIGHTING FIXTURE SCHEDULE

Type	Luminaire Description	Manufacturer and Catalog Number	Volts	Lamp Information No.	Lamp Information Type/Base/Color/CRI	System Watts	Mounting	Finish	Remarks
A	2X2 LED DIRECT/INDIRECT TROFFER WITHOUT DIMMING OPTION	FOCAL POINT FAML 22 ACR LL1 L35 120 G1 FW WH	120	N/A	2959 LUMENS WHITE LED ARRAY (INCLUDED) 3500K	36.2	LAY-IN	WHITE	
AD	**2X2 LED DIRECT/INDIRECT TROFFER WITH 0-10V DIMMING OPTION**	FOCAL POINT **FAML 22 ACR LL1 L35 LD1 120 G1 FW EM WH**	120	N/A	2959 LUMENS WHITE LED ARRAY (INCLUDED) 3500K	36.2	LAY-IN	WHITE	PROVIDE DIMMING DRIVER AS SHOWN
A1	2X2 LED DIRECT/INDIRECT TROFFER WITHOUT DIMMING OPTION	FOCAL POINT FAML 22 ACR LL2 L35 120 G1 FW WH	120	N/A	3282 LUMENS WHITE LED ARRAY (INCLUDED) 3500K	38.5	LAY-IN	WHITE	
A1D	**2X2 LED DIRECT/INDIRECT TROFFER WITH 0-10V DIMMING OPTION**	FOCAL POINT **FAML 22 ACR LL2 L35 LD1 120 G1 FW WH**	120	N/A	3282 LUMENS WHITE LED ARRAY (INCLUDED) 3500K	38.5	LAY-IN	WHITE	PROVIDE DIMMING DRIVER AS SHOWN
A2	2X2 ;ED DIRECT/INDIRECT TROFFER WITHOUT DIMMING OPTION	FOCAN POINT FAML 22 ACR LL3 L35120 G1 FW EM WH	120	N/A	3905 LUMENS WHITE LED ARRAY (INCLUDED) 3500K	44.7	LAY-IN	WHITE	
A2D	**2X2 LED DIRECT/INDIRECT TROFFER WITH 0-10V DIMMING OPTION**	FOCAL POINT **FAML 22 ACR LL3 L35 LD1 120 G1 FW EM WH**	120	N/A	3905 LUMENS WHITE LED ARRAY (INCLUDED) 3500K	44.7	LAY-IN	WHITE	PROVIDE DIMMING DRIVER AS SHOWN
B	**5" LED DOWNLIGHTS WITHOUT DIMMING OPTION FOR BATHROOMS**	**MAXILUME HV5-LED-800L-120-MD-85-LED5101SHZ-SHZ**	**120**	**N/A**	**WHITE LED ARRAY (INCLUDED) 3500K**	**18.6**	**RECESSED**	**SATIN HAZE**	
B1	**5" LED DOWNLIGHTS WITHOUT DIMMING OPTION FOR MAIN STAIRS**	**MAXILUME HV5-LED-1100L-120-MD-85-LED5101SHZ-SHZ**	**120**	**N/A**	**WHITE LED ARRAY (INCLUDED) 3500K**	**21.9**	**RECESSED**	**SATIN HAZE**	
BD	**5" LED DOWNLIGHTS WITH DIMMING OPTION**	**MAXILUME HV5-LED-1100L-DIM10-120-MD-85-LED5101SHZ-SHZ**	**120**	**N/A**	**WHITE LED ARRAY (INCLUDED) 3500K**	**21.9**	**RECESSED**	**SATIN AHZE**	**PROVIDE 0-10V DIMMING DRIVER**
C	LED COVE LIGHT WITHOUT DIMMING OPTION	FOCAL POINT FW4 NS 1 T5H0 1C 120 S RC L835 WH X'	120		WHITE LED ARRAY (INCLUDED) 3500K	9W/FOOT	IN COVE	WHITE	PROVIDE 8 WHITE LED'S PER FOOT 800 LEMENS PER FOOT
D	FLUORESCENT PIT LIGHT	LITHONIA OLVTWM 4000K MVOLT GREY	120	N/A	WHITE LED ARRAY (INCLUDED) 4000K	24	WALL 7' AFF	GREY	SUITABLE FOR WET LOCATION
E	EDGE LIT LED EXIT SIGN	LITHONIA EDGR-RMR	DUAL	N/A	RED LED ARRAY INCLUDED	2	UNIVERSAL	WHITE	SINGLE & DOUBLE FACE EXIT SIGN WITH CHEVRONS AS SHOWN ON PLAN, SUITABLE FOR DAMP LOCATION
EX	WP LED EXIT SIGN PACK	LITHONIA LV S W 1 R 120/277 UM EL N 4X	DUAL	N/A	RED LED ARRAY INCLUDED	2	BACK	WHITE	SINGLE FACE EXIT SIGN SUITABLE FOR WET LOCATION
F	**ADA LED WALL SCONCE NON-DIM FOR MAIN STAIRS**	**WINONA LIGHTING WFW5250 VB LWP2A 35K MVOLT OA XX**	**120**	**N/A**	**WHIOTE LED ARRAY INCLUDED**	**12.3**	**WALL**	**TO BE SELECTED**	
F2	**ADA WALL SCONCE NON-DIM**	**WINONA LIGHTING 4620-F/R-120-OA-CPF-STD**	**120**	**1**	**32W T(T4) GX24q-3 3500K, 82 CRI**	**36**	**WALL RECESSED**	**TO BE SELECTED**	
FD	NON-ADA AUDITORIUM SCONCES	VISA LIGHTING CB5044 2LF13 XX	120	2	13W 2GX7 BASE FLR 3500K, 82 CRI	28	WALL 8' AFF	BY ARCHITECT	
G									
H	2' LED STRIP WITH LENS	LITHONIA ZL2N L24 2000LM MDD MVOLT 35K 80CRI WH	120	N/A	WHITE LED ARRAY (INCLUDED) 3500K	34	SURFACE	WHITE	
J	**PENDANT FLUORESCENT DECORATIVE CYLINDERS FOR MAINS STAIRS**	**WINONA LIGHTING 5400-10-OA-X-BAL**	**120**	**4**	**40W BIAX 2G11 3500K, 82 CRI**	**160**	**PENDANT LENGTH BY ARCH**	**BRUSHED ALUMINUM**	
K	4' LED STRIP WITH LENS	LITHONIA ZL2N L48 3000LM MDD MVOLT 35K 80CRI WH	120	N/A	WHITE LED ARRAY (INCLUDED) 3500K	42	RECESSED	WHITE	
L	4" LED DOWNLIGHT WITHOUT DIMMING OPTION	MAXILUME LED2-4-4-IC-11W-120-35K / LED-1428-SN-WH	120	N/A	WHITE LED ARRAY (INCLUDED) 3500K	11	RECESSED	SATIN NICKEL	
O	4' ENCLOSED WP LED FLUORESCENT	KENALL MLHA8 4 F MW PP 2 50L35K 1 120	120	N/A	WHITE LED ARRAY (INCLUDED) 3500K	48	SURFACE IN POCKET	WHITE	SUITABLE FOR WET LOCATION
Q	4' LED VAPOR-TITE	LITHONIA VAP59LED 35 SYM MVOLT	MVOLT	N/A	WHITE LED ARRAY (INCLUDED) 3500K	61	SURFACE	WHITE	SUITABLE FOR WET LOCATION
R	NOT USED								
T	COMMISIONS CHAMBERS AND LOBBY PENDANT	WINONA LIGHTING 6110-36 F 120 OA CPF	120	3	40W BIAX 2G11 3500K, 82 CRI	126	PENDANT LENGTH BY ARCH	BY ARCHITECT	
U	**6" LED SURFACE MOUNT SHOWER LIGHT**	**LITHONIA FMML 7 835 WH WL**	**120**	**N/A**	**10.2W WHITE LED ARRAY 3500K INCLUDED**	**10.2**	**SURFACE**	**WHITE**	**SUITABLE FOR WET LOCATION**
V	**7" LED SURFACE MOUNT LUMINAIRE**	**LITHONIA FMML 7 835 WH**	**120**	**N/A**	**10.2W WHITE LED ARRAY 3500K INCLUDED**	**10.2**	**SURFACE**	**WHITE**	
W	**LIGHTED ALUMINUM HANDRAIL**	**COLE LIGHTING LR5P-LED-AL-REM-BP-FL-ES-ASYM-3000K**	**120**	**N/A**	**171 LEMENS/FT WHITE LED ARRAY, 3000K REMOTE DRIVER**	**4.5/FT**	**GROUND**	**CLEAR ALUMINUM**	**SUITABLE FOR WET LOCATION LENGTH AS PER DRAWINGS**

EXTERIOR LIGHTING FIXTURE SCHEDULE

Type	Luminaire Description	Manufacturer and Catalog Number	Volts	Lamp Information No.	Lamp Information Type/Base/Color/CRI	System Watts	Mounting	Finish	Remarks
G	SMALL EXTERIOR WALL SCONCE TO MATCH SITE LUMINAIRES	LITHONIA DSX1 LED 20C 350mA 30K T3M MVOLT	120	N/A	18WHITE LED, 350mA INCLUDED	36	WALL	BY ARCHITECT	SUITABLE FOR WET LOCATION PROVIDE VRWB BRACKET
I	6" LED EXTERIOR LENSED DOWNLIGHT WITHOUT DIMMING OPTION	MAXILUME B6-LED-120-35K FL / L658-SN-WH	120	N/A	WHITE LED ARRAY (INCLUDED) 3500K	45	RECESSED	WHITE	SUITABLE FOR WET LOCATION
M	LED WALL PACK	LITHONIA OLW 31 MVOLT	120	N/A	WHITE LED ARRAY (INCLUDED) 3100K	48	WALL 7' AFF	SILVER	SUITABE FOR WET LOCATION
N	EXTERIOR LED WALL MOUNT	LITHONIA OLWP 11 120 PE	120	N/A	WHITE LED ARRAY (INCLUDED) 3500K	20	OVER DOOR	SILVER	SUITABLE FOR WET LOCATION
P1	LED STEP LIGHTS THROUGH EMERGENCY GENERATOR CIRCUIT	BEGA LIGHTING 2380LED-120-3500K-SLV	120	N/A	12W WHITE LED ARRAY INCLUDED	13	3' AFF ON WALL	SILVER	SUITABLE FOR WET LOCATION
Q	4' LED VAPOR-TITE	LITHONIA VAP59LED 35 SYM MVOLT	MVOLT	N/A	WHITE LED ARRAY (INCLUDED) 3500K	62	SURFACE	WHITE	SUITABLE FOR WET LOCATION
Q1	4' LED VAPOR-TITE THROUGH EMERGENCY GENERATOR	LITHONIA VAP59LED 35 SYM MVOLT	MVOLT	N/A	WHITE LED ARRAY (INCLUDED) 3500K	62	SURFACE	WHITE	SUITABLE FOR WET LOCATION
S	SINGLE LED LUMINAIRE WITH HOUSE-SIDE SHIELD ON POLE	LITHONIA LITHONIA DSX1 LED 60C 700 30K T3M MVOLT HS	MVOLT	N/A	(2) 30 LED LIGHT ENGINES, TYPE T3M OPTICS, 3000K	131	25' AFG ROUND TAPERED ALUMINUM POLE	BY ARCHITECT	SUITABLE FOR WET LOCATION POLES TO BE DIRECT BURIAL ALUMINUM BY HAPCO
S1	SINGLE LED LUMINAIRE WITH HOUSE-SIDE SHIELD ON POLE	LITHONIA DSX1 LED 40C 700 30K T4M MVOLT HS	MVOLT	N/A	(2) 20 LED LIGHT ENGINES, TYPE T4M, OPTICS, 3000K	89	25' AFG ROUND TAPERED ALUMINUM POLE	BY ARCHITECT	SUITABLE FOR WET LOCATION POLES TO BE DIRECT BURIAL ALUMINUM BY HAPCO
S2	TWIN LED LUMINAIRES ON POLE	LITHONIA DSX1 LED 60C 700 30K T5W MVOLT	MVOLT	N/A	(2) 30 LED LIGHT ENGINES, TYPE T5W 3000K, @ 700mA	262	25' AFG ROUND TAPERED POLE	BY ARCHITECT	SUITABLE FOR WET LOCATION POLES TO BE DIRECT BURIAL ALUMINUM BY HAPCO
S3	4' SURFACE FLUORESCENT	LITHONIA VAP 39LED SYM	MVOLT	N/A	ONE 39.8W WHITE LED ARRAY INCLUDED	39	SURFACE	WHITE	SUITABLE FOR WET LOCATION
S4	SINGLE LED LUMINAIRE ON POLE	LITHONIA DSX1 LED 40C 700 30K T4M MVOLT HS	MVOLT	N/A	(2) 20 LED LIGHT ENGINES, TYPE T4M OPTIC, 3000K, @ 700mA	89	25' AFG ROUND TAPERED ALUMINUM POLE	BY ARCHITECT	SUITABLE FOR WET LOCATION POLES TO BE DIRECT BURIAL ALUMINUM BY HAPCO
S5	LED BOLLARD	LITHONIA DSXB LED 16C 350 30K ASY MVOLT DWHXD	MVOLT	N/A	16 3000K WHITE LED ARRAY AT 350mA INCLUDED	20	ON GROUND	WHITE	SUITABLE FOR WET LOCATION
S6	SMALL VERSION OF TYPE S WITH HOUSE-SIDE SHIELD	LITHONIA DSX0 LED 20C 530 30K T2S MVOLT HS	MVOLT	N/A	(1) 20 LED LIGHT ENGINE, TYPE T2S OPTIC, 3000K, @ 530mA	35	12' AFG ROUND TAPERED ALUMINUM POLE	BY ARCHITECT	SUITABLE FOR WET LOCATION POLES TO BE DIRECT BURIAL ALUMINUM BY HAPCO
S7	SMALL VERSION OF TYPE S ON POLE	LITHONIA DSX0 LED 20C 530 30K T3M MVOLT	MVOLT	N/A	(1) 20 LED LIGHT ENGINE, TYPE T3M OPTIC, 3000K, @ 530mA	35	12' AFG ROUND TAPERED ALUMINUM POLE	BY ARCHITECT	SUITABLE FOR WET LOCATION POLES TO BE DIRECT BURIAL ALUMINUM BY HAPCO
S8	SMALL VERSION OF TYPE S ON POLE	LITHONIA DSX0 LED 20C 700 30K T5W MVOLT	MVOLT	N/A	(1) 20 LED LIGHT ENGINE, TYPE T5W OPTIC, 3000K, @ 700mA	45	12' AFG ROUND TAPERED ALUMINUM POLE	BY ARCHITECT	SUITABLE FOR WET LOCATION POLES TO BE DIRECT BURIAL ALUMINUM BY HAPCO
S9	IN-GROUND LIGHT FOR FLAG POLE	HYDREL PDX10 SS 18LED WHT53K MVOLT MFL FCL 24S LP	MVOLT	N/A	19W, WHITE LED ARRAY, 5300K INCLUDED	19	IN-GROUND	STAINLESS STEEL	SUITABLE FOR WET LOCATION

KEY WEST CITY HALL
REVISED 8-02-2014

REVISIONS:

KEY WEST CITY HALL
AT GLYNN ARCHER
1300 WHITE STREET KEY WEST, FLORIDA
CITY OF KEY WEST

ANTHONY A. SCHULZ, LICENSE No 60762, STATE OF FLORIDA, PROFESSIONAL ENGINEER
ANTHONY A. SCHULZ, P.E. (ELECTRICAL)
FL REG.#0060762

M.E.P.FP. ENGINEER:
HNGS ENGINEERS
HUFSEY, NICOLAIDES, GARCIA , SUAREZ
CONSULTING ENGINEERS
4800 S.W. 74th Court Miami, Florida 33155
(305) 270-9935 Fax (305) 666-5891
HNGS # 13-0016
☐ ENRIQUE J. SUAREZ, P.E. (MECHANICAL) FL REG.#0015794
☐ CARLOS GARCIA, P.E. (ELECTRICAL) FL REG.#0014104

410 Angela Street
Key West, Florida 33040
Telephone (305) 296-1347
Facsimilie (305) 296-2727
Florida License AAC002022
Bender & Associates ARCHITECTS p.a.

Project N º 1305
LIGHTING FIXTURE SCHEDULE
Date: 8/8/14

PERMIT SET

E0.2

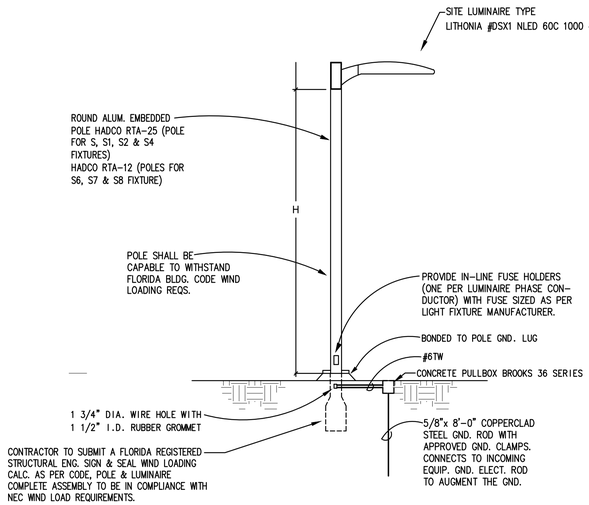

LTS TYPE	H
S	25'
S1	25'
S2	25'
S4	25'
S6	12'
S7	12'
S8	12'

SITE LUMINAIRE MOUNTING DETAIL 'SB'

N.T.S.

NOTES:

1) ELECTRICAL CONTRACTOR TO SUBMIT AS PART OF THE SHOP DRAWING SUBMITTAL SIGNED AND SEALED WIND LOADING CALCULATIONS BY A REGISTERED STATE OF FLORIDA STRUCTURAL ENGINEER OF THE POLE/BASE/LT. FIXTURE ASSEMBLY COMPLYING WITH FBC WIND LOADING REQUIREMENTS.
2) FINISH OF POLE/LUMINAIRE SHALL BE WHITE POWDER COAT FINISH. BEFORE PLACING ORDER, FINISH IS TO BE VERIFIED BY LANDSCAPE ARCHITECT.

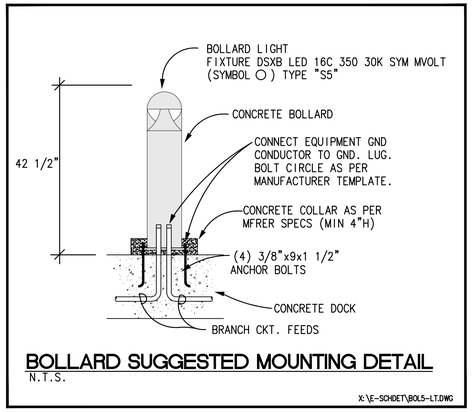

BOLLARD SUGGESTED MOUNTING DETAIL

N.T.S.

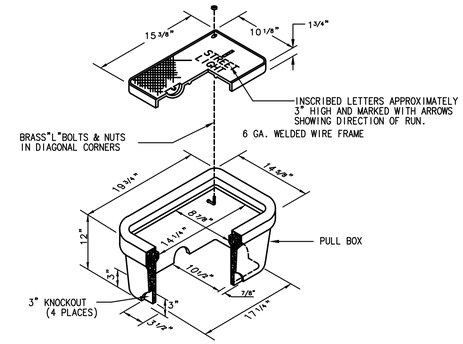

PULL BOX DETAIL

N.T.S.

PULL BOX SPECIFICATION

(1) PULL BOXES SHALL BE OPEN-BOTTOM PRECAST CLASS 1 CONCRETE WITH A MINIMUM COMPRESSIVE STRENGTH OF NOT LESS THAN 2,500 P.S.I. AFTER 28 DAYS. COVERS TO BE CAST IRON WITH NON-SLIP SURFACE & COATED WITH SHERWIN WILLIAMS KEN TRANSPORT ENAMEL, SUPER COACH BLACK FIB 4009 OR APPROVED EQUAL

(2) METAL COVER TO BE DRILLED FOR 1/4-20x 3/4" STAINLESS STEEL FLAT HEAD SCREW. ATTACH #6 CU. GND 36" LONG (CU. COMPRESSION TERMINAL END) WITH NUT AND LOCKWASHER. OTHER END OF PIGTAIL TO BE ATTACHED TO GND. ROD.

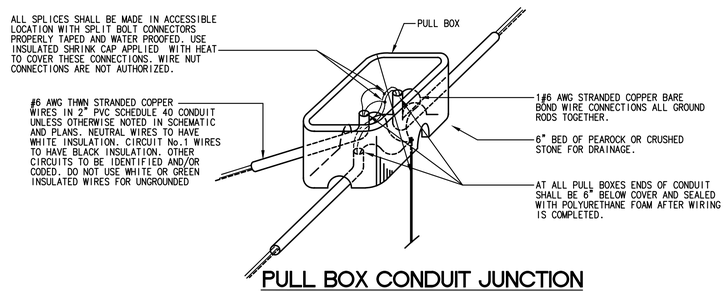

PULL BOX CONDUIT JUNCTION

N.T.S.

NOTES

1. SOLAR POWER MAIN DISCONNECT SWITCH
2. SOLAR POWER 400A., 208V, 3 PH LOCKABLE DISC. SW. MTD TO CARPORT TRUSS STRUCTURE WITH (9) 50A 208V. 3 PH CIRCUIT BREAKERS FED FROM SOLAR POWER INVERTERS. COORDINATE EXACT PLACEMENT WITH SOLAR CONSULTANT, ARCH. AND STRUCTURAL ENGINEER PRIOR TO ROUGH-IN.
3. ELECTRIC CAR CHARGING STATION PROVIDE 1"C TO MAIN ELECTRICAL ROOM.
4. SOLAR PANELS TO BE MOUNTED ON THE ROOF OF THE PARKING CANOPIES. THESE CANOPIES SHALL BE INCLUDED AS BASE BID.
5. KEY'S ENERGY METER PROVIDED AND INSTALLED BY KEYS ENERGY.
6. 3#600KCMIL IN 3 1/2"C TO SWBD SWA 400A, 480V 3 PHASE CIRCUIT BREAKE
7. SOLAR POWER COMBINER AND INVERTER MOUNTED UP ABOVE IN CARPORT TRUSS STRUCTURE. COORDINATE EXACT PLACEMENT WITH SOLAR CONSULTANT, ARCH. AND STRUCTURAL ENGINEER PRIOR TO ROUGH-IN. (TYP. OF 3 SETS PER CARPORT)
8. 2 RUNS OF 3#3/0 KCMIL & 1#3/0 G IN 2"C EA TO 400A SOLAR POWER DISC. SW. MTD TO THE MAIN ELECTRICAL ROOM EXTERIOR WALL ADJACENT TO THE SOLAR POWER KWh METER. RUN CONDUIT EXPOSED STRAPPED TO CARPORT COLUMN PAINTED AS PER ARCH. DIRECTIONS.
9. SOLAR PANELS TO BE MOUNTED ON THE ROOF OF THE PARKING CANOPIES. THE CANOPY FURTHEST TO THE WEST SHALL BE PROVIDED AS AN ALTERNATE BID OPTION.
10. CISTERN PUMP STATION WITH 5HP, 208V, 3PH PUMP & CONTROL PANEL.
11. J. BOX FOR CONNECTION OF IRRIGATION CONTROLLER.
12. 2#6, 1#6 IN 2"C.
13. 4#6, 1#6 IN 2"C.
14. 6#6, 1#6 IN 2"C.
15. 2#8, 1#8 IN 2"C.
16. 6#6, 2#8 & 1#6G IN 2"C.

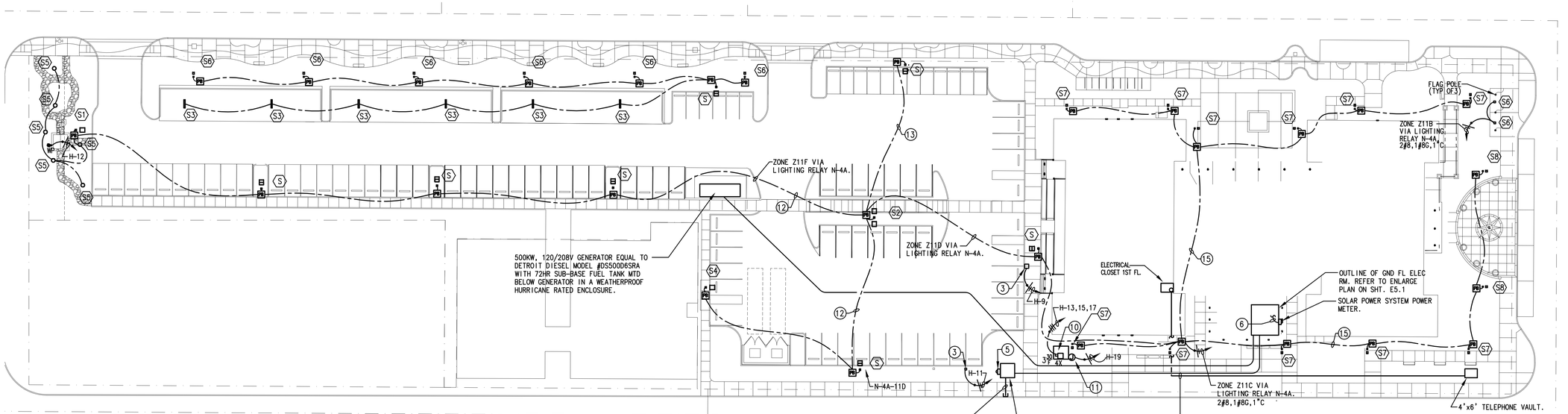

1 ELECTRICAL SITE PLAN

E1.1 1" = 30'-0"

REVISIONS:

KEY WEST CITY HALL AT GLYNN ARCHER

1300 WHITE STREET KEY WEST, FLORIDA
CITY OF KEY WEST

ANTHONY A. SCHULZ LICENSE No 60762 STATE OF FLORIDA PROFESSIONAL ENGINEER
ANTHONY A. SCHULZ, P.E. (ELECTRICAL)
FL REG. #0060762

M.E.P.FP. ENGINEER:
HNGS ENGINEERS
HUFSEY, NICOLAIDES, GARCIA , SUAREZ CONSULTING ENGINEERS
4800 S.W. 74th Court Miami, Florida 33155
(305) 270-9935 Fax (305) 666-5893
HNGS # 13-0016
ENRIQUE J. SUAREZ, P.E. (MECHANICAL) FL REG.#0015794
CARLOS GARCIA, P.E. (ELECTRICAL) FL REG.#0014104

410 Angela Street
Key West, Florida 33040
Telephone (305) 296-1347
Facsimilie (305) 296-27227
Florida License AAC002022
Bender & Associates ARCHITECTS p.a.

Project N.º 1305

ELECTRICAL SITE PLAN

Date: 8/8/14

PERMIT SET

E1.1

STATISTICS

Description	Symbol	Avg	Max	Min	Max/Min
COVERED PARKING (Z=0')	+	2.9 fc	9.4 fc	0.6 fc	15.7:1
LIGHT SPILLAGE PUBLIC ST. (Z=0')	+	0.1 fc	1.0 fc	0.0 fc	N / A
PARKING AREA (Z=0')	+	1.4 fc	2.4 fc	0.5 fc	4.8:1
SEMINARY STREET VEERTICAL FC	+	0.0 fc	0.4 fc	0.0 fc	N / A
STREET PARKING (Z=0')	+	0.6 fc	0.6 fc	0.5 fc	1.2:1
UNITED STREET VERTICAL FC	+	0.1 fc	0.4 fc	0.0 fc	N / A
WHITE STREET VERTICAL FC	+	0.0 fc	0.1 fc	0.0 fc	N / A

Symbol	Label	Qty	Catalog Number	Description	Lamp	Lumens	LLF	Watts
	S5	6	LITHONIA DSXB LED 16C 350 30K SYM MOUNTED ON GROUND AS INDICATED IN DRAWINGS	D-SERIES BOLLARD WITH 16 3000K LEDS OPERATED AT 350mA AND SYMMETRIC DISTRIBUTION	LED	Absolute	0.90	20

LUMINAIRE SCHEDULE

Symbol	Label	Qty	Catalog Number	Description	Lamp	Lumens	LLF	Watts
	S	7	LITHONIA DSX1 LED 60C 700 30K T3M MVOLT HS MOUNTED 25' AFG ON DIRECT BURIAL ALUMINUM POLE	DSX1 LED WITH (2) 30 LED LIGHT ENGINES, TYPE T3M OPTIC, 3000K, @ 700mA WITH HOUSE SIDE SHIELD	LED	Absolute	0.90	131
	S1	1	LITHONIA DSX1 LED 40C 700 30K T4M MVOLT HS MOUNTED 25' AFG ON DIRECT BURIAL ALUMINUM POLE	DSX1 LED WITH (2) 20 LED LIGHT ENGINES, TYPE T4M OPTIC, 3000K, @ 700mA WITH HOUSE SIDE SHIELD	LED	Absolute	0.90	89
	S2	1	LITHONIA DSX1 LED 60C 700 30K TSW MVOLT MOUNTED 25' AFG ON DIRECT BURIAL ALUMINUM POLE	DSX1 LED WITH (2) 30 LED LIGHT ENGINES, TYPE TSW OPTIC, 3000K, @ 700mA	LED	Absolute	0.90	262
	S3	6	LITHONIA VAP 39LED SYM SURFACE MOUNTED 7.8' AFF UNDER CANOPY	39W LED POLYCARBONATE ENCLOSURE WITH SYMMETRIC OPTICAL DIFFUSER, 4100K	ONE 39.8-WATT LED ARRAY, AIMED DOWN POS.	Absolute	0.90	39.8
	S4	1	LITHONIA DSX1 LED 40C 700 30K T4M MVOLT HS MOUNTED 25' AFG ON DIRECT BURIAL ALUMINUM POLE	DSX1 LED WITH (2) 20 LED LIGHT ENGINES, TYPE T4M OPTIC, 3000K, @ 700mA WITH HOUSE SIDE SHIELD	LED	Absolute	0.90	89
	S6	6	LITHONIA DSX0 LED 20C 530 30K T2S MVOLT HS MOUNTED 12' AFG ON DIRECT BURIAL ALUMINUM POLE	DSX0 LED WITH (1) 20 LED LIGHT ENGINE, TYPE T2S OPTIC, 3000K, @ 530mA WITH HOUSE SIDE SHIELD	LED	Absolute	0.90	35
	S7	11	LITHONIA DSX0 LED 20C 530 30K T3M MVOLT MOUNTED 12' AFG ON DIRECT BURIAL ALUMINUM POLE	DSX0 LED WITH (1) 20 LED LIGHT ENGINE, TYPE T3M OPTIC, 3000K, @ 530mA	LED	Absolute	0.90	35
	S8	2	DSX0 LED 20C 700 30K TSW MVOLT	DSX0 LED WITH (1) 20 LED LIGHT ENGINE, TYPE TSW OPTIC, 3000K, @ 700mA	LED	Absolute	0.90	45
	G	4	LITHONIA DSXW1 LED 10C 350 30K T3M MVOLT WALL MOUNTED ABOVE EXTERIOR DOORS	DSXW1 LED WITH 1 LIGHT ENGINE, 10 LED's, 350mA DRIVER, 3000K LED, TYPE 3 MEDIUM OPTIC	LED	Absolute	0.90	13.21
	I	30	ELITE B6-LED-120-35K-FL RECESSED MOUNTED IN PASSAGE WAY	WITH SATIN HAZE REFLECTOR	ONE LED ARRAY. LUMINAIRE OUTPUT = 885 LMS.	Absolute	0.90	16
	IE	33	ELITE B6-LED-120-35K-EM F/L RECESSED MOUNTED IN PASSAGE WAY	WITH SATIN HAZE REFLECTOR	ONE LED ARRAY. LUMINAIRE OUTPUT = 885 LMS.	Absolute	0.90	16
	N	8	LITHONIA OLW 31 MVOLT MOUNTED OVER EXTERIOR DOOR	Wall mounted LED updated optics	LED	Absolute	0.90	32.98
	O	9	KENALL MHLA8 4F MW PP 2 50L35L 1 120 SURFACE MOUNTED UNDER CANOPY	4' ENCLOSED AND GASKETED LED LUMINAIRE	LED	4000	0.90	50
	P	4	BEGA LIGHTING 2380 LED RECESSED MOUNTED IN STEPS	CAST ALUMINUM HOUSING, FROSTED GLASS ENCLOSURE.	TEN WHITE LEDS	Absolute	0.90	14.3

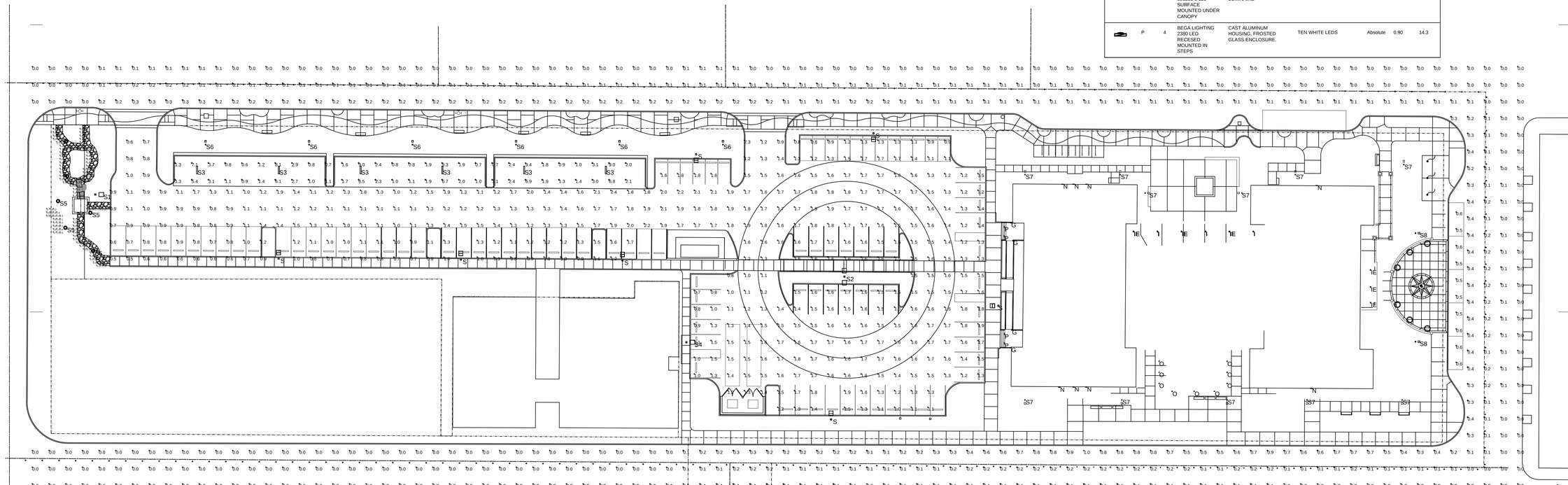

1 ELECTRICAL SITE LIGHTING
E1.1 PHOTOMETRIC PLAN 1" = 30'-0"

REVISIONS:

KEY WEST CITY HALL AT GLYNN ARCHER

1300 WHITE STREET KEY WEST, FLORIDA
CITY OF KEY WEST

ANTHONY A. SCHULZ LICENSE No 60762 STATE OF FLORIDA PROFESSIONAL ENGINEER

ANTHONY A. SCHULZ P.E. (ELECTRICAL)
FL REG. #0060762

M.E.P.FP. ENGINEER:

HNGS ENGINEERS

HUFSEY, NICOLAIDES, GARCIA , SUAREZ CONSULTING ENGINEERS
4800 S.W. 74th Court Miami, Florida 33155
(305) 270-9935 Fax (305) 666-5891
HNGS # 13-0016
☐ ENRIQUE J. SUAREZ, P.E. (MECHANICAL) FL REG.#0015794
☐ CARLOS GARCIA, P.E. (ELECTRICAL) FL REG.#0014104

410 Angela Street
Key West, Florida 33040
Telephone (305) 296-1347
Facsimilie (305) 296-2727
Florida License AAC002022

Bender & Associates ARCHITECTS p.a.

Project N º 1305

ELECTRICAL
SITE LIGHTING
PHOTOMETRIC PLAN

Date: 8/8/14

PERMIT SET

E1.1P

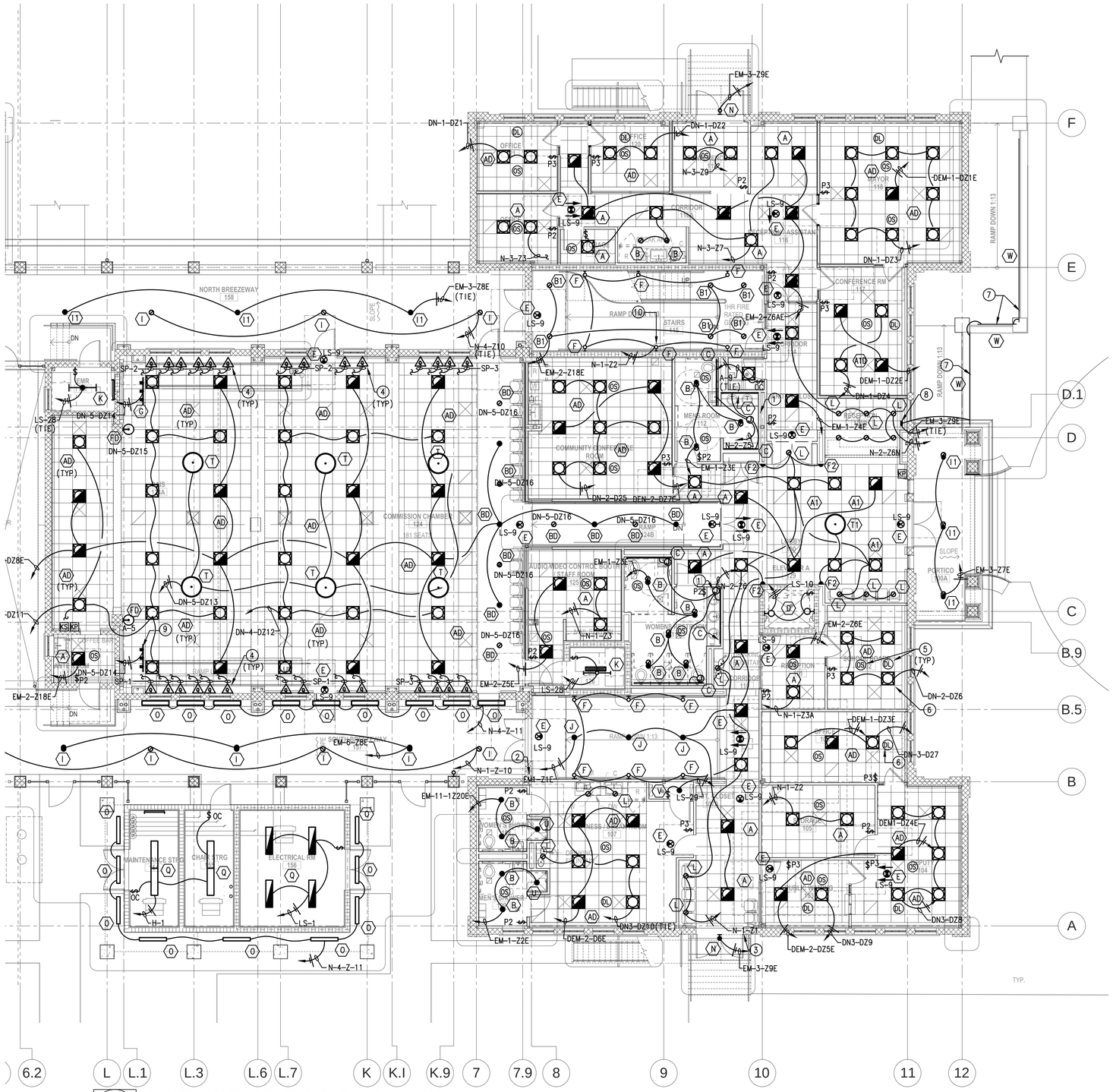

1 1st FLOOR LIGHTING PLAN - WING A

E1.1A

1/8" = 1'-0"

CODED NOTES:

1. J.BOX FOR CONNECTION OF COVE LIGHT.
2. EM-1-Z1 DENOTES EMERGENCY RELAY PANEL EM1 ZONE #1.
3. N-1-Z1 DENOTES NORMAL RELAY PANEL N-1 ZONE #1.
4. SHADE MOTOR W/ LV WIRING. REFER TO LUTRON RISER DIAGRAM.
5. CONTRACTOR TO FIELD COORDINATE THE EXACT LOCATION OF THE CLG. MTD OCCUPANCY SENSOR, DAYLIGHT HARVESTING SENSOR & QSM'S WITH MANUF. FOR PROPER DESIGN INTENT OPERATION OF THE SYSTEM.
6. E.C. RESPONSIBLE FOR CONNECTING PLENUM RATED LUTRON EC SYSTEM DIMMING CONTROL WIRING TO ALL DIMMABLE LIGHT FIXTURES PER LUTRON SPECIFICATION. (TYP. CONNECTION TO ALL DIMMABLE SWITCH),
7. LED LIGJT FIXTURE MTD. IN TOP HAND RAIL. LOCATE LED DRIVER IN CLG. SPACE OF RECEPTION 100B.
8. LED HAND RAIL LIGHT DRIVER MOUNTED IN CLG. SPACE.
9. 6 FT DIMMABLE LED TRACK LIGHT PROVIDED WITH 5 TRACK HEADS.
10. REFER TO ARCH. ELEVATIONS ON SHEET A9.2A FOR MTG. HEIGHT OF WALL SCONCES.

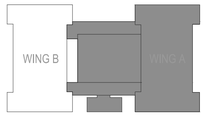

KEY PLAN WING A
1" = 80'-0"

REVISIONS:

KEY WEST CITY HALL AT GLYNN ARCHER

1300 WHITE STREET KEY WEST, FLORIDA
CITY OF KEY WEST

ANTHONY A. SCHULZ LICENSE No 60762 STATE OF FLORIDA PROFESSIONAL ENGINEER

ANTHONY A. SCHULZ P.E. (ELECTRICAL)
FL REG. #0060762

M.E.P.FP. ENGINEER:

HNYGS ENGINEERS

HUFSEY, NICOLADES, GARCIA, SUAREZ CONSULTING ENGINEERS
4800 S.W. 74th Court Miami, Florida 33155
(305) 270-9935 Fax (305) 666-5891
HNGS # 13-0016
- ENRIQUE J. SUAREZ, P.E. (MECHANICAL) FL REG.#0015754
- CARLOS GARCIA, P.E. (ELECTRICAL) FL REG.#0024304

410 Angela Street
Key West, Florida 33040
Telephone (305) 296-1347
Facsimilie (305) 296-2727
Florida License AAC002022

Bender & Associates ARCHITECTS p.a.

Project N.º 1305

1ST FLOOR LIGHTING PLAN - WING A

Date: 8/8/14

PERMIT SET

E1.1A

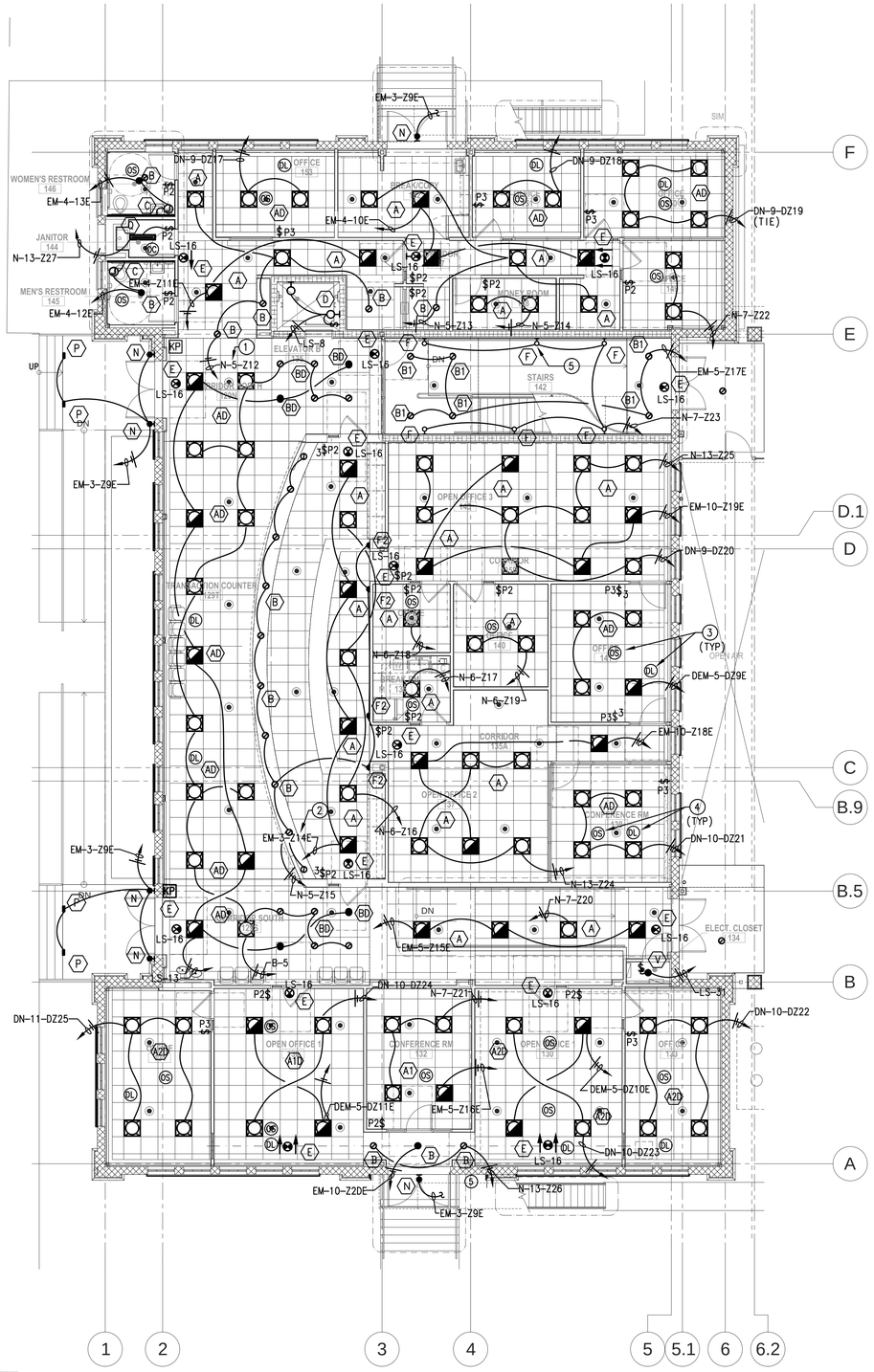

1 1st FLOOR LIGHTING PLAN- WING B
E1.1B

1/8" = 1'-0"

CODED NOTES:

1. N-5-Z12 DENOTES NORMAL RELAY PANEL N5 ZONE #12.
2. EM-5-Z14E DENOTES EMERGENCY RELAY PANEL EM-5 ZONE #14E.
3. CONTRACTOR TO FIELD COORDINATE THE EXACT LOCATION OF THE CLG. MTD OCCUPANCY SENSOR, DAYLIGHT HARVESTING SENSOR & QSM'S WITH MANUF. FOR PROPER DESIGN INTENT OPERATION OF THE SYSTEM.
4. E.C. RESPONSIBLE FOR CONNECTING PLENUM RATED LUTRON EC SYSTEM DIMMING CONTROL WIRING TO ALL DIMMABLE LIGHT FIXTURES PER LUTRON SPECIFICATION. (TYP. CONNECTION TO ALL DIMMABLE SWITCH).
5. REFER TO ARCH. ELEVATION ON SHEET A9.2A FOR MTG. HEIGHTS OF WALL SCONCES.

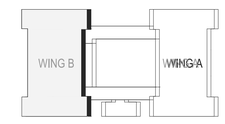

KEY PLAN WING B
1" = 80'-0"

REVISIONS:

KEY WEST CITY HALL AT GLYNN ARCHER

1300 WHITE STREET KEY WEST, FLORIDA
CITY OF KEY WEST

ANTHONY A. SCHULZ LICENSE No 60762 STATE OF FLORIDA PROFESSIONAL ENGINEER
ANTHONY A. SCHULZ P.E. (ELECTRICAL)
FL REG. #0060762

M.E.P.FP. ENGINEER:
HNYGS ENGINEERS
HUFSEY, NICOLAIDES, GARCIA , SUAREZ CONSULTING ENGINEERS
410 Angela Street Key West, Florida 33040
(305) 270-9935 Fax (305) 666-5893
HNGS # 13-0038
ENRIQUE J. SUAREZ, P.E. (MECHANICAL) FL REG.#0016784
CARLOS GARCIA, P.E. (ELECTRICAL) FL REG.#0014324

410 Angela Street
Key West, Florida 33040
Telephone (305) 296-1347
Facsimilie (305) 296-2727
Florida License AAC002022
Bender & Associates ARCHITECTS *p.a.*

Project N º 1305
1ST FLOOR LIGHTING PLAN - WING B
Date: 8/8/14

PERMIT SET

E1.1B

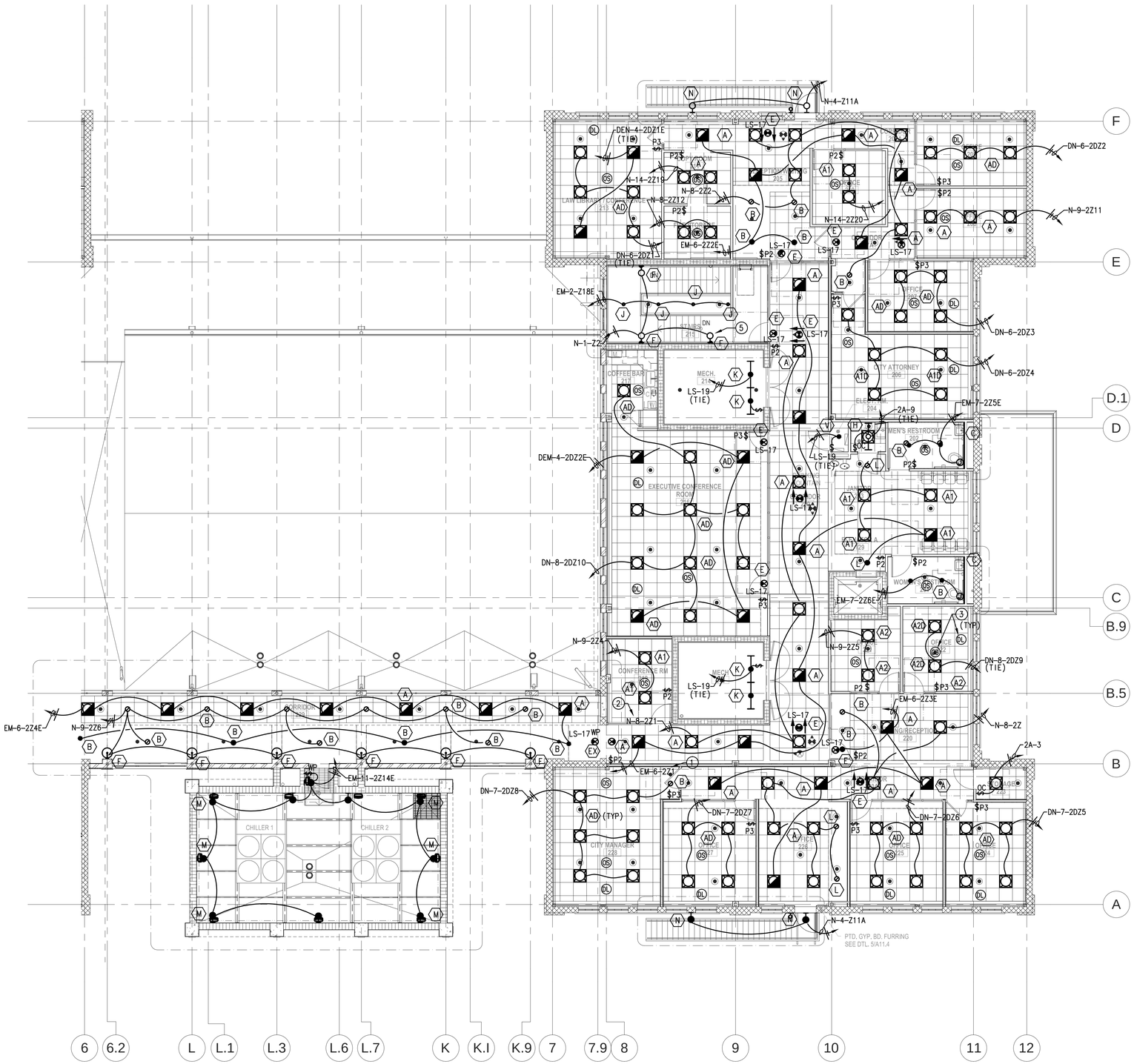

1 2ND FLOOR LIGHTING PLAN - WING A
E1.2A
1/8" = 1'-0"

CODED NOTES:

1. EM-6-2Z1E DENOTES EMERGENCY LIGHT RELAY EM-6 ZONE 2Z1E.
2. N-8-2Z1 DENOTES NORMAL LIGHT RELAY N8 ZONE 2Z1.
3. CONTRACTOR TO FIELD COORDINATE THE EXACT LOCATION OF THE CLG. MTD OCCUPANCY SENSOR, DAYLIGHT HARVESTING SENSOR & QSM'S WITH MANUF. FOR PROPER DESIGN INTENT OPERATION OF THE SYSTEM.
4. E.C. RESPONSIBLE FOR CONNECTING PLENUM RATED LUTRON EC SYSTEM DIMMING CONTROL WIRING TO ALL DIMMABLE LIGHT FIXTURES PER LUTRON SPECIFICATION. (TYP. CONNECTION TO ALL DIMMABLE SWITCH).
5. REFER TO ARCH. ELEVATIONS ON SHEET A9.2A FOR MTG. HEIGHTS OF WALL SCONCES.

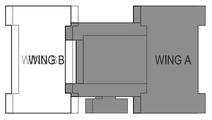

KEY PLAN WING A
1" = 80'-0"

REVISIONS:

KEY WEST CITY HALL AT GLYNN ARCHER

1300 WHITE STREET KEY WEST, FLORIDA
CITY OF KEY WEST

ANTHONY A. SCHULZ LICENSE No 60762 STATE OF FLORIDA PROFESSIONAL ENGINEER
ANTHONY A. SCHULZ P.E. (ELECTRICAL)
FL REG. #0060762

M.E.P.FP. ENGINEER:
HNGS ENGINEERS
HUFSEY, NICOLAIDES, GARCIA, SUAREZ CONSULTING ENGINEERS
4800 S.W. 74th Court Miami, Florida 33155
(305) 270-9935 Fax (305) 666-5891
HNGS # 13-0016
☐ ENRIQUE J. SUAREZ, P.E. (MECHANICAL) FL REG.#0015794
☐ CARLOS GARCIA, P.E. (ELECTRICAL) FL REG.#0014104

410 Angela Street
Key West, Florida 33040
Telephone (305) 296-1347
Facsimilie (305) 296-2727
Florida License AAC002022

Bender & Associates ARCHITECTS p.a.

Project N° 1305
2ND FLOOR LIGHTING PLAN - WING A
Date: 8/8/14

PERMIT SET

E1.2A

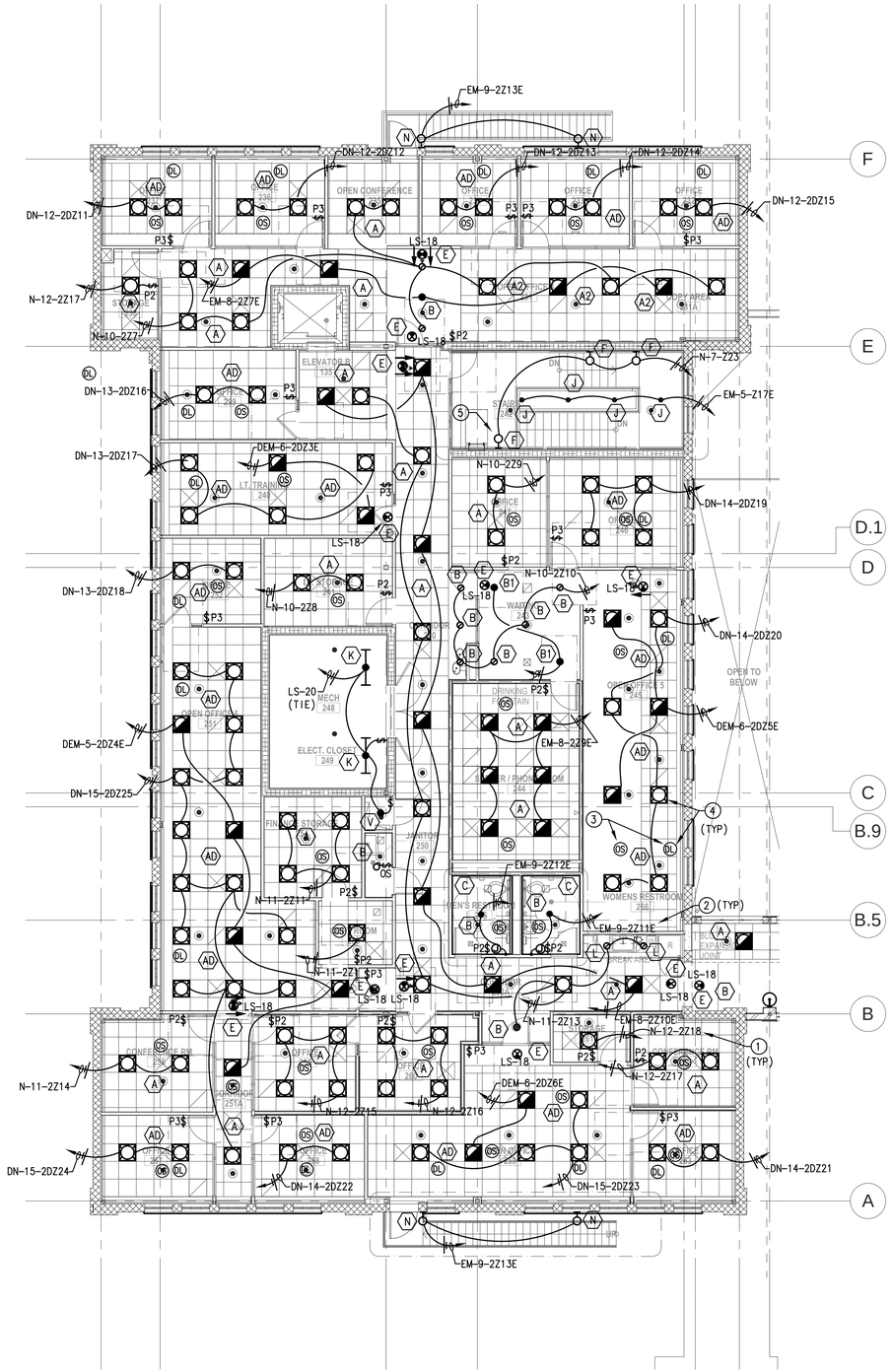

1 2ND FLOOR LIGHTING PLAN - WING B

E1.2B

1/8" = 1'-0"

CODED NOTES:

1. N-5-Z12 DENOTES NORMAL RELAY PANEL N5 ZONE #12.
2. EM-5-Z14E DENOTES EMERGENCY RELAY PANEL EM-5 ZONE #14E.
3. CONTRACTOR TO FIELD COORDINATE THE EXACT LOCATION OF THE CLG. MTD OCCUPANCY SENSOR, DAYLIGHT HARVESTING SENSOR & QSM'S WITH MANUF. FOR PROPER DESIGN INTENT OPERATION OF THE SYSTEM.
4. E.C. RESPONSIBLE FOR CONNECTING PLENUM RATED LUTRON EC SYSTEM DIMMING CONTROL WIRING TO ALL DIMMABLE LIGHT FIXTURES PER LUTRON SPECIFICATION. (TYP. CONNECTION TO ALL DIMMABLE SWITCH).
5. REFER TO ARCH. ELEVATION ON SHEET A9.2A FOR MTG. HEIGHTS OF WALL SCONCES.

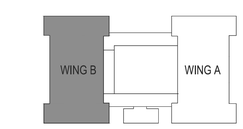

KEY PLAN WING B
1" = 80'-0"

REVISIONS:

KEY WEST CITY HALL AT GLYNN ARCHER

1300 WHITE STREET KEY WEST, FLORIDA
CITY OF KEY WEST

ANTHONY A. SCHULZ LICENSE No 60762 STATE OF FLORIDA PROFESSIONAL ENGINEER

ANTHONY A. SCHULZ P.E. (ELECTRICAL)
FL REG. #0060762

M.E.P.FP. ENGINEER:

HNGS ENGINEERS

HUFSEY, NICOLAIDES, GARCIA , SUAREZ CONSULTING ENGINEERS
4800 S.W. 74th Court Miami, Florida 33155
(305) 270-9935 Fax (305) 666-5893
HNGS # 13-0016

ENRIQUE J. SUAREZ, P.E. (MECHANICAL)
FL REG.#0016784

CARLOS GARCIA, P.E. (ELECTRICAL)
FL REG.#0014324

410 Angela Street
Key West, Florida 33040
Telephone (305) 296-1347
Facsimilie (305) 296-2727
Florida License AAC002022

Bender & Associates ARCHITECTS p.a.

Project N º 1305

2ND FLOOR LIGHTING PLAN - WING B

Date: 8/8/14

PERMIT SET

E1.2B

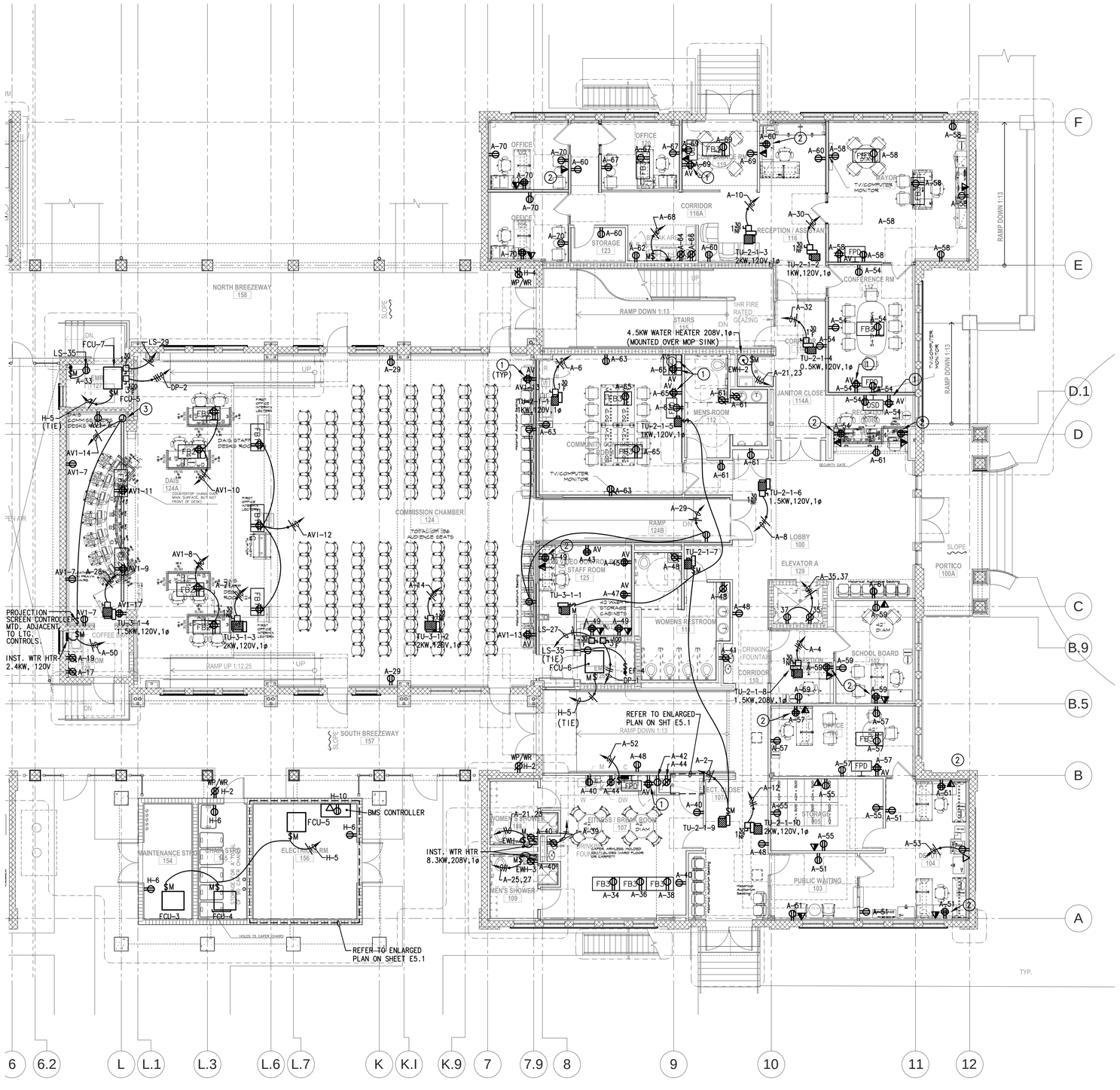

1 1st FLOOR POWER PLAN - WING A

E2.1A

1/8" = 1'-0"

CODED NOTES

1. FOR AV EQUIPMENT OUTLET MTG. HEIGHT REFER TO AV DRAWING. AV OUTLET DENOTED WITH AN 'AV' ADJACENT TO OUTLET.
2. REC & TEL/DATA OUTLETS TO BE MOUNTED AT 30"AFF.
3. J. BOX FOR MOTORIZED PROJECTION SCREEN.

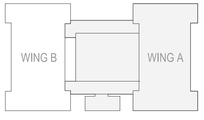

KEY PLAN WING A
1" = 80'-0"

REVISIONS:

KEY WEST CITY HALL AT GLYNN ARCHER

1300 WHITE STREET KEY WEST, FLORIDA
CITY OF KEY WEST

ANTHONY A. SCHULZ LICENSE No 60762 STATE OF FLORIDA PROFESSIONAL ENGINEER

ANTHONY A. SCHULZ P.E. (ELECTRICAL)
FL REG. #0060762

M.E.P.FP. ENGINEER:

HINGS ENGINEERS

HUFSEY, NICOLAIDES, GARCIA , SUAREZ CONSULTING ENGINEERS
4800 S.W. 74th Court Miami, Florida 33155
(305) 270-9935 Fax (305) 666-5891
HNGS # 13-0016

- ENRIQUE J. SUAREZ, P.E. (MECHANICAL) FL REG.#0015794
- CARLOS GARCIA, P.E. (ELECTRICAL) FL REG.#0014104

410 Angela Street
Key West, Florida 33040
Telephone (305) 296-1347
Facsimilie (305) 296-2727
Florida License AAC002022

Bender & Associates ARCHITECTS *p.a.*

Project N º 1305

1ST FLOOR POWER PLAN - WNG A

Date: 8/8/14

PERMIT SET

E2.1A

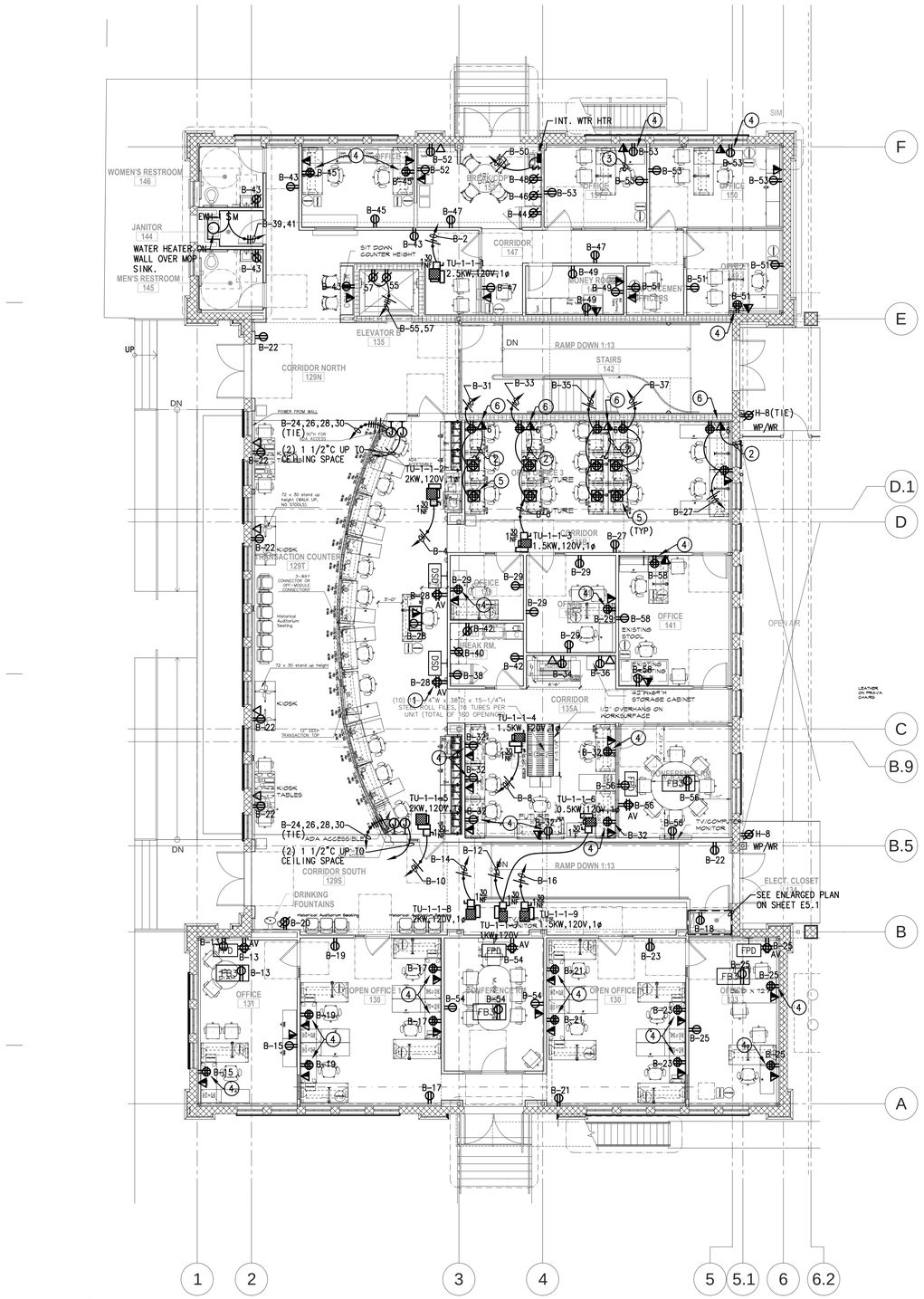

1 1st FLOOR POWER PLAN- WING B

E2.1B

1/8" = 1'-0"

CODED NOTES:

1. REFER TO AV DRAWINGS FOR EXACT MTG HEIGHT OF AV EQUIPMENT RECEPT. DENOTED WITH AN 'AV'.
2. 1"C TO CLG. SPACE.
3. 3/4"C TO CLG. SPACE TYP. ALL TEL, DATA, COMB. OUTLET U.O.N.
4. REC AND TEL/DATA OUTLETS TO BE MOUNTED AT 30"AFF.
5. 2 GANG FLOOR BOX EQUAL TO WIREMOLD W/ BRASS COVER PLATE & (2) DUPLEX RECEPT.
6. DATA OUTLET W/ 6 JACKS.

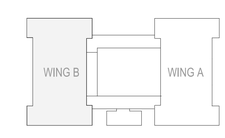

KEY PLAN WING B
1" = 80'-0"

REVISIONS:

KEY WEST CITY HALL AT GLYNN ARCHER

1300 WHITE STREET KEY WEST, FLORIDA
CITY OF KEY WEST

ANTHONY A. SCHULZ LICENSE No 60762 STATE OF FLORIDA PROFESSIONAL ENGINEER

ANTHONY A. SCHULZ P.E. (ELECTRICAL)
FL REG. #0060762

M.E.P.FP. ENGINEER:
HNYGS ENGINEERS
HUFSEY, NICOLAIDES, GARCIA , SUAREZ CONSULTING ENGINEERS
2000 S.W. 67th Court Miami, Florida 33155
(305) 270-9935 Fax (305) 666-5893
HNGS # 13-0016
☐ ENRIQUE J. SUAREZ, P.E. (MECHANICAL) FL REG.#0049404
☐ ALOIS GARCIA, P.E. (ELECTRICAL) FL REG.#0054434

410 Angela Street
Key West, Florida 33040
Telephone (305) 296-1347
Facsimilie (305) 296-2727
Florida License AAC002022
Bender & Associates ARCHITECTS p.a.

Project N.º 1305

1ST FLOOR POWER PLAN - WING B

Date: 8/8/14

PERMIT SET

E2.1B

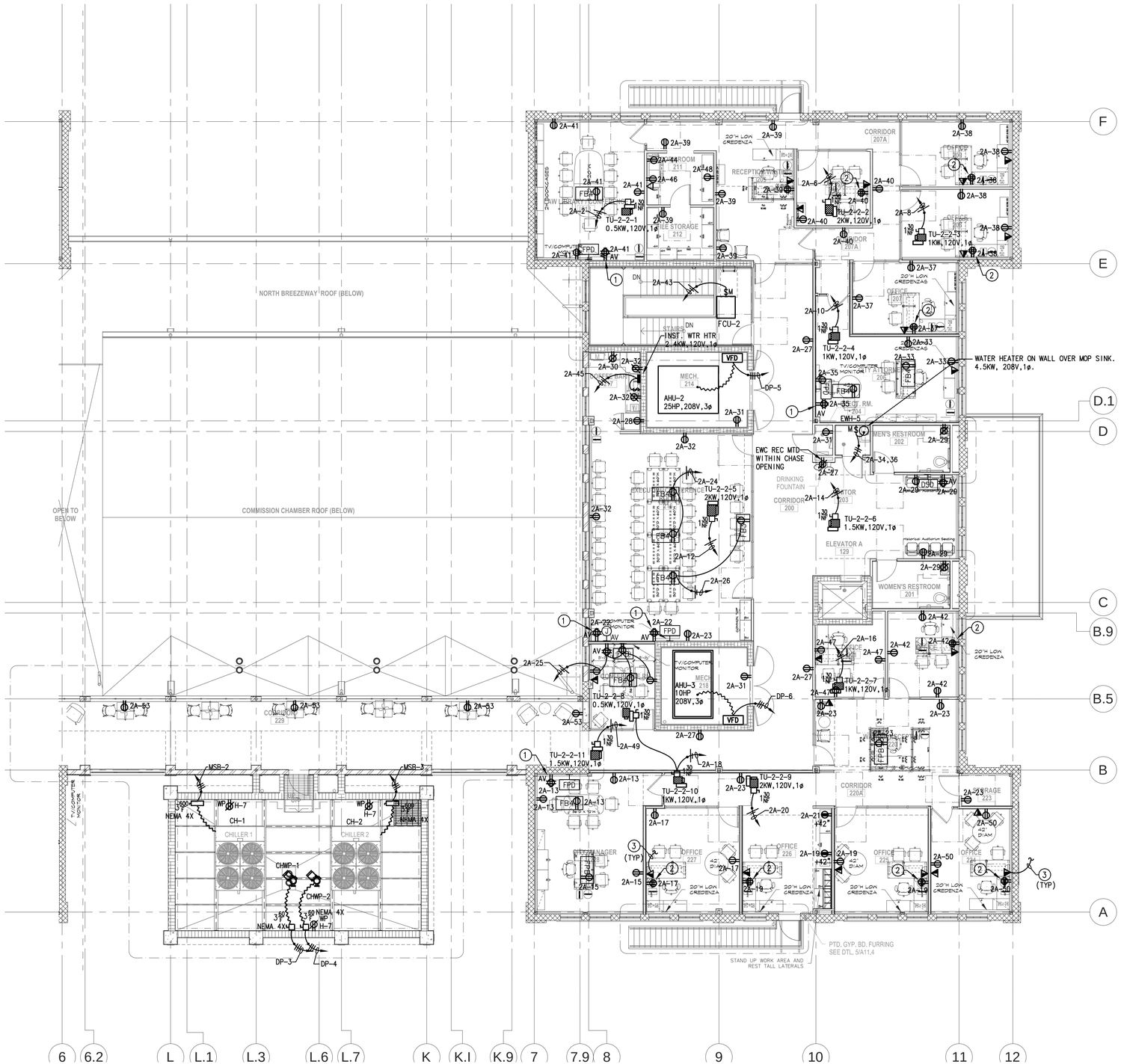

1 2ND FLOOR ELECTRICAL PLAN - WING A
E2.2A
1/8" = 1'-0"

CODED NOTES

1. FOR AV EQUIPMENT OUTLET MTG. HEIGHT REFER TO AV DRAWING. AV OUTLET DENOTED WITH AN 'AV' ADJACENT TO OUTLET.
2. REC & TEL/DATA OUTLETS TO BE MTD @ 30" AFF.
3. 3/4"C W/PULLSTRING UP TO CLG. SPACE (TYP. ALL TEL. & DATA OUTLETS U.O.N.)

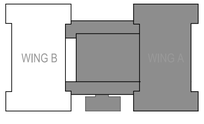

KEY PLAN WING A
1" = 80'-0"

REVISIONS:

KEY WEST CITY HALL AT GLYNN ARCHER

1300 WHITE STREET KEY WEST, FLORIDA
CITY OF KEY WEST

ANTHONY A. SCHULZ LICENSE No 60762 STATE OF FLORIDA PROFESSIONAL ENGINEER
ANTHONY A. SCHULZ P.E. (ELECTRICAL)
FL REG. #0060762

M.E.P.FP. ENGINEER:
HNGS ENGINEERS
HUFSEY, NICOLAIDES, GARCIA, SUAREZ CONSULTING ENGINEERS
4600 S.W. 74th Court, Miami, Florida 33155
(305) 270-9935 Fax (305) 666-5891
HNGS # 13-0016
☐ ENRIQUE J. SUAREZ, P.E. (MECHANICAL) FL REG.#0015794
☐ CARLOS GARCIA, P.E. (ELECTRICAL) FL REG.#0014104

410 Angela Street
Key West, Florida 33040
Telephone (305) 296-1347
Facsimilie (305) 296-2727
Florida License AAC002022
Bender & Associates ARCHITECTS p.a.

Project N.º 1305
2ND FLOOR ELECTRICAL PLAN - WING A
Date: 8/8/14

PERMIT SET

E2.2A

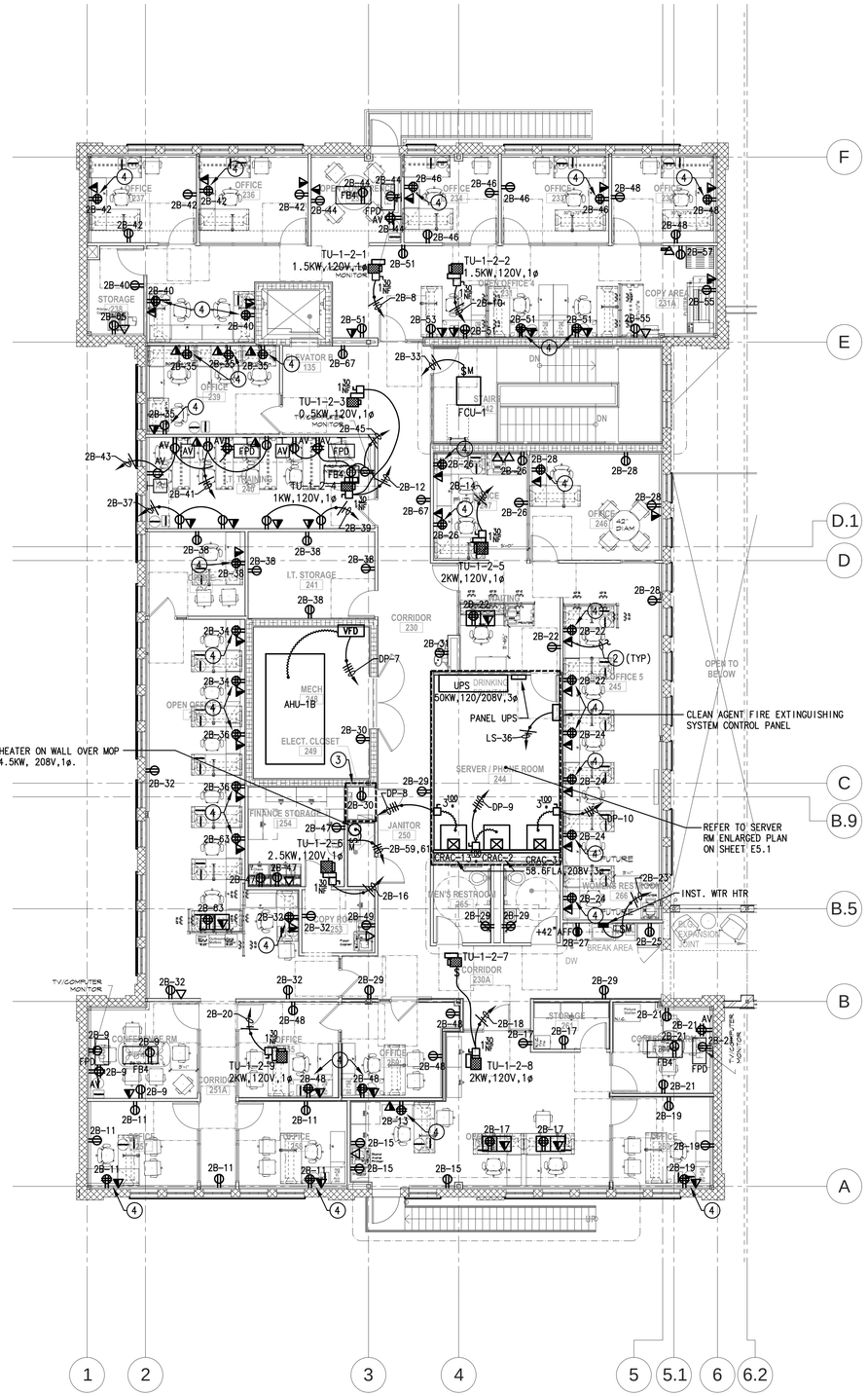

1 2ND FLOOR POWER PLAN - WING B

E2.2B

1/8" = 1'-0"

CODED NOTES:

1. REFER TO AV DRAWINGS FOR EXACT MTG HEIGHT OF AV EQUIPMENT RECEPT. DENOTED WITH AN 'AV'.
2. 3/4"C TO CLG. SPACE.
3. REFER TO ENLARGED PLAN ON SHEET E5.1.
4. REC, TEL AND DATA OUTLETS TO BE MOUNTED AT 30"AFF.

NOTES:

REFER TO EAV, AV & TI SERIES DRAWINGS FOR ADDITIONAL BOX SIZE AND SPECIFICATIONS, CONDUIT REQUIREMENTS. E.C. TO FURNISH & INSTALL ALL BOXES INDICATED IN THESE DRAWINGS.

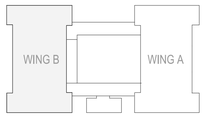

KEY PLAN WING B
1" = 80'-0"

REVISIONS:

KEY WEST CITY HALL AT GLYNN ARCHER

1300 WHITE STREET KEY WEST, FLORIDA
CITY OF KEY WEST

ANTHONY A. SCHULZ LICENSE No 60762 STATE OF FLORIDA PROFESSIONAL ENGINEER

ANTHONY A. SCHULZ P.E. (ELECTRICAL)
FL REG. #0060762

M.E.P.FP. ENGINEER:

HNGS ENGINEERS

HUFSEY, NICOLAIDES, GARCIA , SUAREZ CONSULTING ENGINEERS
4800 S.W. 74th Court Miami, Florida 33155
(305) 270-9935 Fax (305) 666-5893
HNGS # 13-0016
ENRIQUE J. SUAREZ, P.E. (MECHANICAL)
FL REG.#0016784
CARLOS GARCIA, P.E. (ELECTRICAL)
FL REG.#0014324

410 Angela Street
Key West, Florida 33040
Telephone (305) 296-1347
Facsimilie (305) 296-2727
Florida License AAC002022

Bender & Associates ARCHITECTS p.a.

Project N º 1305

2ND FLOOR POWER PLAN - WING B

Date: 8/8/14

PERMIT SET

E2.2B

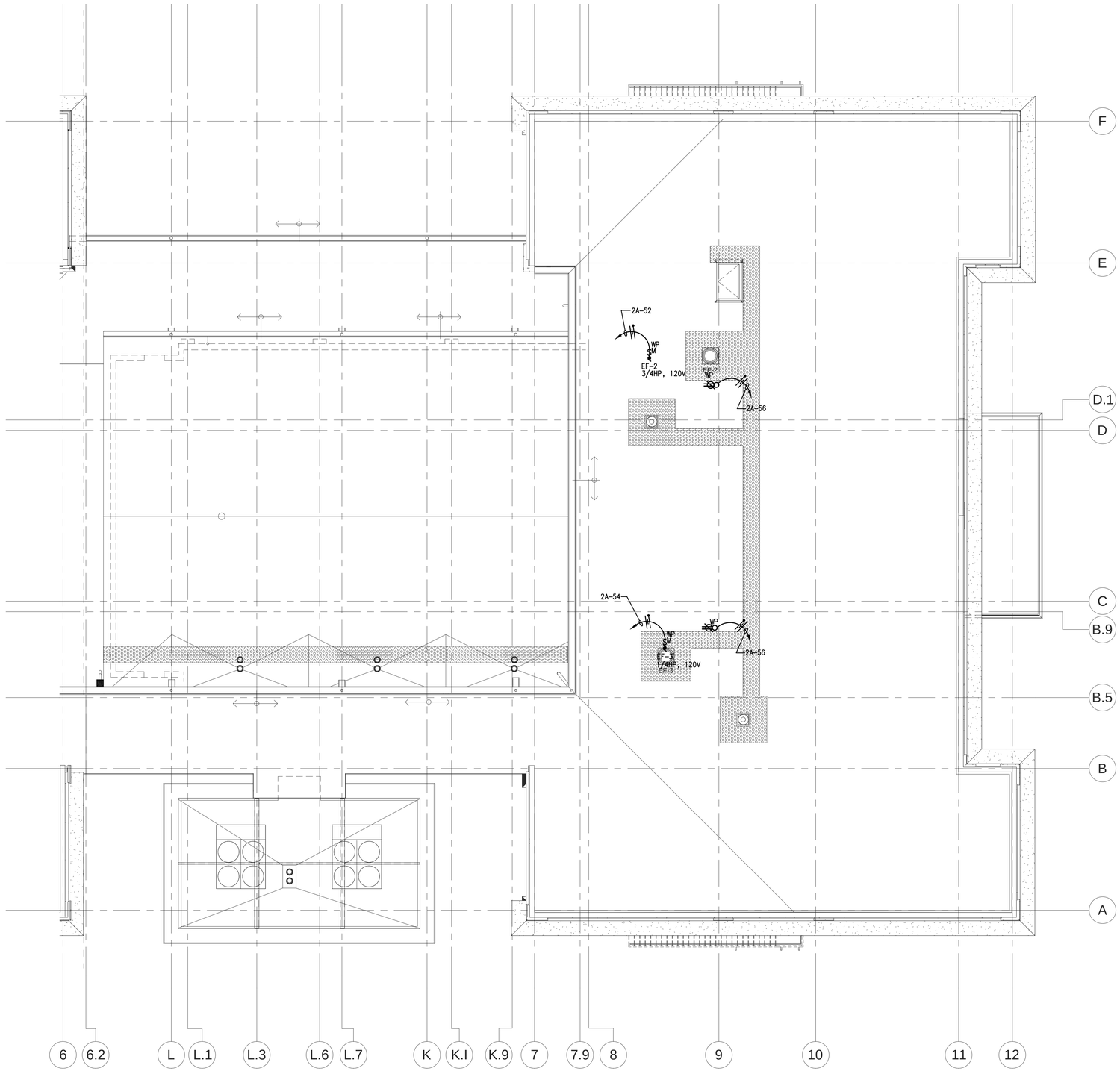

1 ROOF ELECTRICAL PLAN - WING A
E3.1A

1/8" = 1'-0"

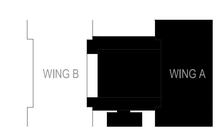

KEY PLAN WING A
1" = 80'-0"

REVISIONS:

KEY WEST CITY HALL AT GLYNN ARCHER

1300 WHITE STREET KEY WEST, FLORIDA
CITY OF KEY WEST

ANTHONY A. SCHULZ LICENSE No 60762 STATE OF FLORIDA PROFESSIONAL ENGINEER

ANTHONY A. SCHULZ, P.E. (ELECTRICAL)
FL REG. #0060762

M.E.P.FP. ENGINEER:

HINGS ENGINEERS

HUFSEY, NICOLAIDES, GARCIA , SUAREZ CONSULTING ENGINEERS
4800 S.W. 74th Court Miami, Florida 33155
(305) 270-9935 Fax (305) 666-5891
HINGS # 13-0016
ENRIQUE J. SUAREZ, P.E. (MECHANICAL)
FL REG.#0015794
CARLOS GARCIA, P.E. (ELECTRICAL)
FL REG.#0014104

410 Angela Street
Key West, Florida 33040
Telephone (305) 296-1347
Facsimilie (305) 296-2727
Florida License AAC002022

Bender & Associates ARCHITECTS *p.a.*

Project N º 1305

ROOF ELECTRICAL PLAN - WING A

Date: 8/8/14

PERMIT SET

E3.1A

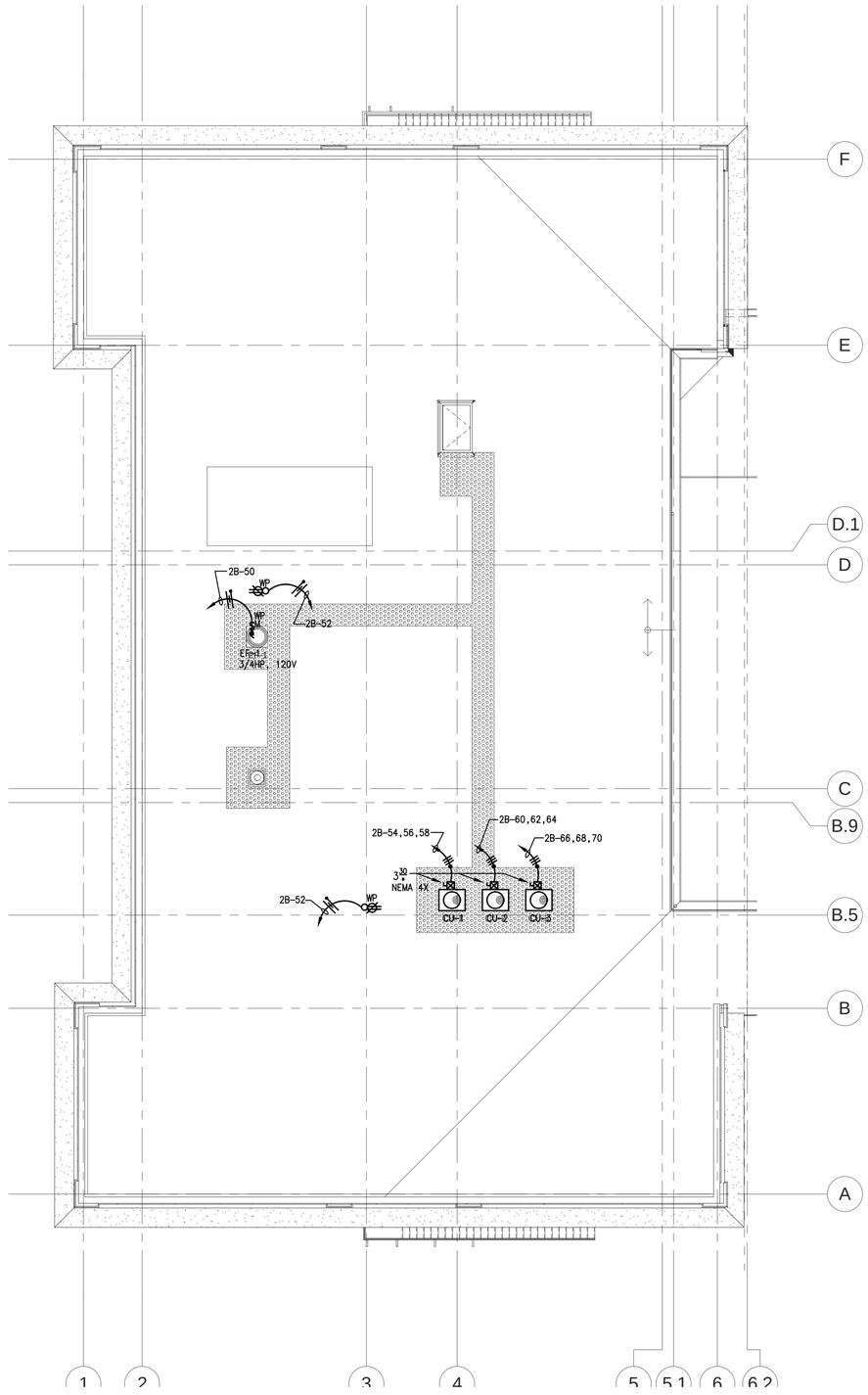

1 ROOF ELECTRICAL PLAN - WING B

E3.1B

1/8" = 1'-0"

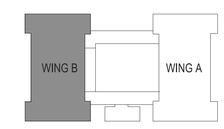

KEY PLAN WING B
1" = 80'-0"

REVISIONS:

KEY WEST CITY HALL AT GLYNN ARCHER

1300 WHITE STREET KEY WEST, FLORIDA
CITY OF KEY WEST

ANTHONY A. SCHULZ LICENSE No 60762 STATE OF FLORIDA PROFESSIONAL ENGINEER

ANTHONY A. SCHULZ P.E. (ELECTRICAL)
FL REG. #0060762

M.E.P.FP. ENGINEER:

HINGS ENGINEERS

HUFSEY, NICOLAIDES, GARCIA , SUAREZ CONSULTING ENGINEERS
4800 S.W. 74th Court Miami, Florida 33155
(305) 270-9935 Fax (305) 666-5891
HNGS # 13-0016
☐ ENRIQUE J. SUAREZ, P.E. (MECHANICAL) FL REG.#0015794
☐ CARLOS GARCIA, P.E. (ELECTRICAL) FL REG.#0014104

410 Angela Street
Key West, Florida 33040
Telephone (305) 296-1347
Facsimilie (305) 296-2727
Florida License AAC002022

Bender & Associates ARCHITECTS *p.a.*

Project N º 1305

ROOF ELECTRICAL PLAN - WING B

Date: 8/8/14

PERMIT SET

E3.1B

1 E1.1A 1st FLOOR FIRE ALARM PLAN - WING A

1/8" = 1'-0"

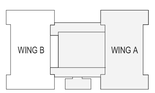

KEY PLAN WING A
1" = 80'-0"

REVISIONS:

KEY WEST CITY HALL AT GLYNN ARCHER

1300 WHITE STREET KEY WEST, FLORIDA
CITY OF KEY WEST

ANTHONY A. SCHULZ LICENSE No 60762 STATE OF FLORIDA PROFESSIONAL ENGINEER

ANTHONY A. SCHULZ P.E. (ELECTRICAL)
FL REG. #0060762

M.E.P.FP. ENGINEER:

HNGS ENGINEERS

HUFSEY, NICOLAIDES, GARCIA , SUAREZ CONSULTING ENGINEERS
4800 S.W. 74th Court Miami, Florida 33155
(305) 270-9935 Fax (305) 666-5891
HNGS # 13-0016

- ENRIQUE J. SUAREZ, P.E. (MECHANICAL) FL REG.#0015794
- CARLOS GARCIA, P.E. (ELECTRICAL) FL REG.#0014104

410 Angela Street
Key West, Florida 33040
Telephone (305) 296-1347
Facsimilie (305) 296-2727
Florida License AAC002022

Bender & Associates ARCHITECTS p.a.

Project N º 1305

1ST FLOOR
FIRE ALARM PLAN - WING A

Date: 8/8/14

PERMIT SET

E4.1A