CONTRACT DOCUMENTS FOR:

ITB #20-003

FIRE MAIN REPLACEMENT
KEY WEST HISTORIC SEAPORT

OCTOBER 2019

CITY OF KEY WEST

MAYOR: TERI JOHNSTON

COMMISSIONERS:

JIMMY WEEKLEY

SAMUEL KAUFMAN

BILLY WARDLOW

GREGORY DAVILA

MARY LOU HOOVER

CLAYTON LOPEZ

PREPARED BY:
Port & Marine Services

CITY OF KEY WEST

CAROLINE STREET AND BAHAMA VILLAGE
COMMUNITY REDEVELOPMENT AGENCY (CRA)

KEY WEST, FLORIDA

DOCUMENTS

for

FIRE MAIN REPLACEMENT
KEY WEST HISTORIC SEAPORT

****

CONSISTING OF:

BIDDING REQUIREMENTS
CONTRACT FORMS
SUPPLEMENTAL INFORMATION

****

KEY WEST HISTORIC SEAPORT (KWHS)

OCTOBER 2019

TABLE OF CONTENTS

Page

PART 1 - BIDDING REQUIREMENTS

INVITATION TO BID 1
INSTRUCTIONS TO BIDDERS 2
BID FORM 8
BID BOND 18
ANTI-KICKBACK AFFIDAVIT 20
PUBLIC ENTITIES CRIME FORM 21
CITY OF KEY WEST INDEMNIFICATION 23
EQUAL BENEFITS FOR DOMESTIC PARTNERS AFFIDAVIT 24
CONE OF SILENCE 25
NON-COLLUSION AFFIDAVIT 26
LOCAL VENDOR CERTIFICATION 27
BIDDER'S CHECKLIST 28

PART 2 - CONTRACT FORMS

CONTRACT 30
FLORIDA PERFORMANCE BOND 32
FLORIDA PAYMENT BOND 34
LICENSE REQUIREMENT AND COST 36

PART 3 – SUPPLEMENTAL INFORMATION

CONCEPTUAL DRAWINGS 37

PART 1

BIDDING REQUIREMENTS

INVITATION TO BID

Sealed Bids for City of Key West Caroline Street and Bahama Village Community Redevelopment Agency (CRA) **"FIRE MAIN REPLACEMENT – KEY WEST HISTORIC SEAPORT**," addressed to the City of Key West, will be received at the office of the City Clerk, 1300 White Street, Key West, Florida until **3:30 p.m**., local time, on the **30th day of October 2019**, and then will be publicly opened and read. Any bids received after the time and date specified will not be considered.

Please submit one (1) original bid package and two (2) electronic copies on USB drives with a single PDF file of the entire bid package. Bid package shall be enclosed in a sealed envelope, clearly marked on the outside **"ITB #20-003 FIRE MAIN REPLACEMENT – KEY WEST HISTORIC SEAPORT"** addressed and delivered to the City Clerk at the address noted above.

The CRA is seeking BIDS from qualified individuals or firms for design/build replacement of the Seaports fire main per the Scope of Work and conceptual drawings.

The full Invitation to Bid may be obtained from Demand Star by Onvia and The City of Key West website. Please contact Demand Star at www.demandstar.com or call 1-800-711-1712 or www.cityofkeywest-fl.gov

EACH BID MUST BE SUBMITTED ON THE PRESCRIBED FORM AND ACCOMPANIED BY BID SECURITY AS PRESCRIBED IN THE INSTRUCTIONS TO BIDDERS, PAYABLE TO THE CITY OF KEY WEST, FLORIDA, IN AN AMOUNT NOT LESS THAN FIVE (5) PERCENT OF THE AMOUNT BID.

For information concerning the proposed work please contact Karen Olson, Deputy Director, Port and Marine Services by email at kolson@cityofkeywest-fl.gov. Verbal communications, per the City's "Cone of Silence" ordinance are not allowed.

As stated above at the time of the BID submittal the Bidder must provide satisfactory documentation of State Licenses. The Bidder shall furnish documentation showing that he is in compliance with the licensing requirements of County, and City licenses as would be required within ten days of the award. The successful Bidder must also be able to satisfy the City Attorney as to such insurance coverage and legal requirements as may be demanded by the Proposal in question. The CRA may reject BID for any and/or all of the following reasons: (1) for budgetary reasons, (2) if the proposer misstates or conceals a material fact in its bid, (3) if the proposal does not strictly conform to the law or is non-responsive to the bid requirements, (4) if the proposal is conditional, or (5) if a change of circumstances occurs making the purpose of the proposal unnecessary to the CRA. (6) if such rejection is in the best interest of the CRA. The CRA may also waive any minor formalities or irregularities in any proposal.

The CRA retains the right to award bid to the bidder that best meet the needs of the City.

* * * * * *

INSTRUCTIONS TO BIDDERS

1. CONTRACT DOCUMENTS

A. FORMAT

The Contract Documents are divided into parts, divisions, and sections for convenient organization and reference. Generally, there has been no attempt to divide the Specification sections into work performed by the various building trades, work by separate subcontractors, or work required for separate facilities in the Project.

B. DOCUMENT INTERPRETATION

Separate sections contained within these Contract Documents are intended to be mutually cooperative and provide all details reasonably required for the execution of proposed work.

Should there be any doubt as to the meaning or intent of said Contract Documents, the Bidder should request of the Deputy Port and Marine Services Director, in writing (at least **5** calendar days prior to Bid opening (**October 25th**)) an interpretation thereof. Any interpretation or change in said Contract Documents will be made only in writing in the form of Addenda to the Documents, which will be furnished to all registered holders of Contract Documents. Bidders shall submit with their Bids, or indicate receipt of all Addenda. The Owner will not be responsible for any other explanation or interpretations of said Documents.

2. SCOPE OF SERVICES

Provide all labor and material necessary to complete the following: Remove existing 4" Schedule 80 PVC pipe, fittings, hangers, rods, valves, connection to existing fire hose cabinets. Commencing at Dock A new 4" fusion butt weld type SDR 11 pipe and fittings to be installed that will supply main line at seawall penetration adjacent to Turtle Kraals Restaurant. Connect new line to all fire hose cabinets with new riser and valves. Risers to be brass. Extend 4" line to each dock behind Schooner Wharf Bar that shall include 3 additional standpipe connections. Docks H1 and H2 shall have new 4" fusion pipe and fittings with new standpipe replaced in existing hose cabinet. All risers, valves and fittings to be brass material. Hanger, fasteners and rods to be 316 stainless steel and installed at code required spacing. System shall be reconnected to existing 6" RPDA device with FM approved check valves provide a redundant water supply (FKAA line and booster pump pressure.). **All work and material shall comply with NFPA303 and NFPA14 codes.**

Total footages: 1900 lineal feet +/- 4" existing to be removed and replaced. New 4" fire 280' SDR 11 +/-, and 3 new hose cabinets.

Contractor must provide barrier to prevent items from falling into water. Provide plan with materials with BID.

Note: All connection to exiting PVC Schedule 80 shall be grooved connections.

The intent of this Scope of Work is to describe a functionally complete project (or part thereof) to be constructed in accordance with all applicable codes. Any work, materials, or equipment that may reasonably be inferred from this Scope of Work, as being required to produce the intended result shall be supplied whether or not specifically called for.

All work must meet current applicable codes.

3. REQUIRED QUALIFICATIONS

The prospective Proposers must meet the statutorily prescribed requirements before award of Contract by the CRA. Proposers must hold or obtain all licenses and/or certificates as required by the State and Local Statutes in order to bid and perform the work specified herein.

4. BIDDER'S UNDERSTANDING

Each Proposer must inform himself of the conditions relating to the execution of the work and make himself thoroughly familiar with all the Contract Documents. Failure to do so will not relieve the successful Proposer of his obligation to enter into a Contract and complete the contemplated work in strict accordance with the Contract Documents.

Each Proposer shall inform himself of, and the Proposer awarded a Contract shall comply with, federal, state, and local laws, statutes, and ordinances relative to the execution of the work. This requirement includes, but is not limited to, applicable regulations concerning minimum wage rates, nondiscrimination in the employment of labor, protection of public and employee safety and health, environmental protection, the protection of natural resources, fire protection, permits, fees, and similar subjects.

5. TYPE OF BID

UNIT PRICE

The Proposal for the work is to be submitted on a unit price basis. All items required to complete the work specified or shown on the Drawings but not included in the Proposal shall be considered incidental to those set forth in the Proposal. Payment to the Contractor will be made on the measurement of the work actually performed by the Contractor, as specified in the Contract Documents.

The Bidder further proposes to accept as full payment for the Work proposed herein, the amounts computed under the provisions of the Contract Documents and based on the following unit price amounts. The Bidder agrees that the unit prices include all allowances for overhead and profit for each type and unit of work called for in these Contract Documents.

Total allowable cost for Mobilization, General/Supp Conditions and Demobilization (bid schedule line item 1) shall be 10% maximum of total construction costs (bid schedule line items 3 through 7).

6. PREPARATION OF BIDS

A. GENERAL

All blank spaces in the BID form must be filled in for all schedules and associated parts, as required, preferably in BLACK INK. All price information shall be clearly shown in both words and figures where required. No changes shall be made in the phraseology of the forms. Written amounts shall govern in case of discrepancy between the amounts stated in writing and the amounts stated in figures. In case of discrepancy between unit prices and extended totals, unit prices shall prevail.

Any BID shall be deemed informal which contains omissions, erasures, alterations, or additions of any kind, or prices uncalled for, or in which any of the prices are obviously unbalanced, or which in any manner shall fail to conform to the conditions of the published Invitation to BID.

Only one BID from any individual, firm, partnership, or corporation, under the same or different names, will be considered. Should it appear to the Owner that any Bidder is interested in more than one BID for work contemplated; all Bids in which such Bidder is interested will be rejected.

B. SIGNATURE

The Bidder shall sign his BID in the blank space provided therefor. If Bidder is a corporation, the legal name of the corporation shall be set forth above together with the signature of the officer or officers authorized to sign Contracts on behalf of the corporation. If Bidder is a partnership, the true name of the firm shall be set forth above together with the signature of the partner or partners authorized to sign Contracts in behalf of the partnership. If signature is by an agent, other than an officer of a corporation or a member of a partnership, a notarized power-of-attorney must be on file with the Owner prior to opening of Bids or submitted with the Bid otherwise the Bid will be regarded as not properly authorized.

C. SPECIAL BIDDING REQUIREMENTS

The Bidder shall submit with his Bid his experience record showing his experience and expertise in fire main construction and related work. Such experience record shall provide at least five current or recent projects of similar work, not more than 5 years old within the State Florida and preferably Monroe County. For each project the following information shall be provided:

1. Description and location of work.
2. Contract amount.
3. Dates work was performed.
4. Owner.
5. Name of Owner's contact person and phone number.
6. Engineer.
7. Name of Engineer's contact person and phone number.

The bidder shall submit at least 3 references from the above work experience.

D. ATTACHMENTS

Bidder shall complete and submit the following forms with his bid:

1. Anti-Kickback Affidavit
2. Public Entity Crimes Form
3. City of Key West Indemnification Form
4. Equal Benefits for Domestic Partners Affidavit
5. Cone of Silence
6. Local Vendor Certification
7. Non-Collusion Affidavit
8. Proof of Required Insurance

7. MODIFICATION OR WITHDRAWAL OF BID

Prior to the time and date designated for receipt of Bids, any Bid submitted may be withdrawn by notice to the party receiving Bids at the place designated for receipt of Bids. Such notice shall be in writing over the signature of the Bidder or by telegram. If by telegram, written confirmation over the signature of the Bidder shall be mailed and postmarked on or before the date and time set for receipt of Bids. No Bid may be withdrawn after the time scheduled for opening of Bids unless the time specified in paragraph AWARD OF CONTRACT of these Instructions to Bidders shall have elapsed.

8. BID SECURITY

BIDS must be accompanied by cash, a certified check, or cashier's check drawn on a bank in good standing, or a bid bond issued by a Surety authorized to issue such bonds in the state where the work is located, in the amount of five (5) percent of the total amount of the Proposal submitted. This bid security shall be given as a guarantee that the Bidder will not withdraw his BID for a period of ninety (90) days after bid opening, and that if awarded the Contract, the successful Bidder will execute the attached Contract and furnish properly executed Performance and Payment Bonds, each in the full amount of the Contract price within the time specified. Agent and Surety phone numbers must be provided.

The Attorney-in-Fact who executes this bond in behalf of the Surety must attach a notarized copy of his power-of-attorney as evidence of his authority to bind the Surety on the date of execution of the bond. Where State Statute requires, certification by a resident agent shall also be provided.

If the Bidder elects to furnish a Bid Bond, he shall use the Bid Bond form bound herewith, or one conforming substantially thereto in form and content.

9. AWARD OF CONTRACT

Within 120 calendar days after the opening of Bids the CRA will accept one or more of the Bids. The acceptance of the Bid will be by written notice of award mailed to the office designated in the Bid or delivered to the Bidder's representative.

The CRA reserves the right to accept or reject any or all Bids and to waive any formalities and irregularities in said Bids.

10. BASIS OF AWARD

The award will be made by the Owner on the basis of the BID from the lowest, responsive, responsible BIDDER which, in the Owner's sole and absolute judgment will best serve the interest of the Owner.

11. EXECUTION OF CONTRACT

The successful Bidder shall, within 10 working days after receiving Notice of Award, sign and deliver to the Owner a Contract in the form hereto attached together with the insurance certificate examples of the bonds as required in the Contract Documents and evidence of holding required licenses and certificates. Within 10 working days after receiving the signed Contract from the successful Bidder, the Owner's authorized agent will sign the Contract. Signature by both parties constitutes execution of the Contract.

12. CONTRACT BONDS

A. PERFORMANCE AND PAYMENT BONDS

The successful Bidder shall file with the CITY, at the time of delivery of the signed Contract, a Performance Bond and Payment Bond on the form bound herewith, each in the full amount of the Contract price in accordance with the requirements of Florida Statutes Section 255.05 or 713.23, as applicable, as security for the faithful performance of the Contract and the payment of all persons supplying labor and materials for the construction of the work, and to cover all guarantees against defective workmanship or materials, or both, during the warranty period following the date of final acceptance of the work by the CITY. The Surety furnishing this bond shall have a sound financial standing and a record of service satisfactory to the CITY, shall be authorized to do business in the State of Florida, and shall be listed on the current U.S. Department of Treasury Circular Number 570, or amendments thereto in the Federal Register, of acceptable Sureties for federal projects. The CONTRACTOR shall supply the OWNER with phone numbers, addresses, and contacts for the Surety and their agents. Pursuant to Section 255.05(7), Florida Statutes, in lieu of the bond required by law, the contractor may file with the city an alternative form of security in the form of cash, a money order, a certified check, a cashier's check or an irrevocable letter of credit.

B. POWER-OF-ATTORNEY

The Attorney-in-Fact (Resident Agent) who executes this Performance and Payment Bond in behalf of the Surety must attach a notarized copy of his power-of-attorney as evidence of his authority to bind the Surety on the date of execution of the bond. All Contracts, Performance and Payment Bonds, and respective powers-of-attorney will have the same date.

13. FAILURE TO EXECUTE CONTRACT AND FURNISH BOND

The Bidder who has a Contract awarded to him and who fails to promptly and properly execute the Contract or furnish the required Bonds shall forfeit the bid security that accompanied his bid, and the bid security shall be retained as liquidated damages by the CITY, and it is agreed that this said sum is a fair estimate of the amount of damages the CITY will

sustain in case the Bidder fails to enter into a Contract or furnish the required Bonds. Bid security deposited in the form of cash, a certified check, or cashier's check shall be subject to the same requirement as a Bid Bond.

14. PUBLIC RECORDS REQUIREMENTS

In addition to other contract requirements provided by law, each public agency contract for services must include a provision that requires the contractor to comply with public records laws, specifically to (a) keep and maintain public records that ordinarily and necessarily would be required by the public agency in order to perform the service; (b) provide the public with access to public records on the same terms and conditions that the public agency would provide the records and at a cost that does not exceed the cost provided in this chapter or as otherwise provided by law; (c) ensure that public records that are exempt or confidential and exempt from public records disclosure requirements are not disclosed except as authorized by law; and (d) meet all requirements for retaining public records and transfer, at no cost, to the public agency all public records in possession of the contractor upon termination of the contract and destroy any duplicate public records that exempt or confidential and exempt from public records disclosure requirements. All records stored electronically must be provided to the public agency in a format that is compatible with the information technology systems of the public agency. If a contractor does not comply with a public records request, the public agency shall enforce the contract provisions in accordance with the contract.

15. CERTIFICATES OF INSURANCE

Bidder agrees to furnish the Owner, before commencing the work under this Contract, the certificates of insurance as specified in these Documents.

16. TIME OF COMPLETION

The time of completion of the work to be performed under this Contract is the essence of the Contract. Delays and extensions of time may only be allowed in accordance with the provisions stated in the General Conditions. Time allowed for completion of the work authorized is stated in Bid.

When the Contractor receives a Notice to Proceed, he shall commence work as soon as possible and shall complete all work within the number of calendar days stipulated in the Contract.

The term of this contract will be ninety **(90)** calendar days.

17. PERMITS AND FEES

The Bidder awarded this project shall procure and pay all permits and licenses, charges, and fees, and give notices necessary and incidental to the due and lawful prosecution of the work, the cost of which shall be included in the fee received for the work, except where separately agreed.

* * * * *

BID FORM

To: City of Key West, Florida

Address: 1300 White Street, Key West, Florida 33040

Project Title: **FIRE MAIN REPLACEMENT**
KEY WEST HISTORIC SEAPORT

Project No.: ITB #20-003

Bidder's person to contact for additional information on this Bid:

Company Name: _____

Contact Name & Telephone #: _____

Email Address: _____

BIDDER'S DECLARATION AND UNDERSTANDING

The undersigned, hereinafter called the Bidder, declares that the only persons or parties interested in this Bid are those named herein, that this Bid is, in all respects, fair and without fraud, that it is made without collusion with any official of the Owner, and that the Bid is made without any connection or collusion with any person submitting another Bid on this Contract.

The Bidder further declares that he has carefully examined the Contract Documents, that he has personally inspected the Project, that he has satisfied himself as to the quantities involved, including materials and equipment, and conditions of work involved, including the fact that the description of the quantities of work and materials, as included herein, is brief and is intended only to indicate the general nature of the work and to identify the said quantities with the detailed requirements of the Contract Documents, and that this Bid is made according to the provisions and under the terms of the Contract Documents, which Documents are hereby made a part of this Proposal.

The Bidder further agrees that the Owner may “non-perform” the work in the event that the low bid is in excess of available funding. Non-performance will be determined prior to Notice of Award.

The intent of the Bid Documents is to describe a functionally complete project (or part thereof) to be constructed in accordance with the Contract Documents. Any work, materials, or equipment that may reasonably be inferred from the Contract Documents, as being required to produce the intended result shall be supplied, whether or not specifically called for in the Contract Documents.

CERTIFICATES OF INSURANCE

CONTRACTOR is to secure, pay for, and file with the City of Key West, prior to commencing any work under the Contract, all certificates for workers’ compensation, public liability, and property damage liability insurance, and such other insurance coverages as may be required by specifications and addenda thereto, in at least the following minimum amounts with specification amounts to

prevail if greater than minimum amounts indicated. Notwithstanding any other provision of the Contract, the CONTRACTOR shall provide the minimum limits of liability insurance coverage as follows:

Type of Insurance	Limits	Comments
Marine General Liability	$2,000,000	The proposers may have these coverages combined in 1 policy
Watercraft Liability	$1,000,000	
Business Automobile Liability	$1,000,000	
Workers' Compensation	Statutory	
Employers Liability	$1,000,000/$1,000,000/$1,000,000	
USL&H and Jones Act Coverage	$1,000,000	

CONTRACTOR shall furnish an original Certificate of Insurance indicating, and such policy providing coverage to, City of Key West named as an additional insured on a PRIMARY and NON CONTRIBUTORY basis utilizing an ISO standard endorsement at least as broad as CG 2010 (11/85) or its equivalent, (combination of CG 20 10 07 04 and CG 20 37 07 04, providing coverage for completed operations, is acceptable) including a waiver of subrogation clause in favor of City of Key West on all policies. CONTRACTOR will maintain the General Liability and Umbrella Liability insurance coverages summarized above with coverage continuing in full force including the additional insured endorsement until at least 3 years beyond completion and delivery of the work contracted herein.

Notwithstanding any other provision of the Contract, the CONTRACTOR shall maintain complete workers' compensation coverage for each and every employee, principal, officer, representative, or agent of the CONTRACTOR who is performing any labor, services, or material under the Contract. Further, CONTRACTOR shall additionally maintain the following minimum limits of coverage:

Bodily Injury Each Accident	$1,000,000
Bodily Injury by Disease Each Employee	$1,000,000
Bodily Injury by Disease Policy Limit	$1,000,000

The City of Key West confirms that the scope of services specified in the Contract requires work on or near a navigable waterway. Water description: City of Key West Mooring Field. Therefore the CONTRACTOR's workers' compensation policy shall be endorsed to provide the following:

- Workers Compensation/Employer Liability
  USL&H Coverage (Longshore and Harbor Workers' Compensation Act) Endorsement WC 000106A
  Jones Act Coverage* Endorsement WC 000201A

  Note: Jones Act (Crew) coverage may be provided under the P&I policy, if Contractor is using an OWNED vessel during the course of the work.

CONTRACTOR shall provide the City of Key West with a Certificate of Insurance verifying compliance with the workman's compensation coverage as set forth herein and shall provide as often as required by the City of Key West such certification which shall also show the insurance company, policy number, effective and expiration date, and the limits of workman's compensation coverage under each policy.

CONTRACTOR's insurance policies shall be endorsed to give 30 days written notice to the City of Key West in the event of cancellation or material change, using form CG 02 24, or its equivalent.

Certificates of Insurance submitted to the City of Key West will not be accepted without copies of the endorsements being requested. This includes additional insured endorsements, cancellation/material change notice endorsements, and waivers of subrogation. Copies of USL&H Act and Jones Act endorsements will also be required if necessary. PLEASE ADVISE YOUR INSURANCE AGENT ACCORDINGLY.

CONTRACTOR will comply with any and all safety regulations required by any agency or regulatory body including but not limited to OSHA. CONTRACTOR will notify City of Key West immediately by telephone at (305) 809-3811 any accident or injury to anyone that occurs on the jobsite and is related to any of the work being performed by the CONTRACTOR.

SURETY AND INSURER QUALIFICATIONS

All bonds, insurance contracts, and certificates of insurance shall be either executed by or countersigned by a licensed resident agent of the Surety or insurance company, having his place of business in the State of Florida, and in all ways complying with the insurance laws of the State of Florida. Further, the said Surety or insurance company shall be duly licensed and qualified to do business in the State of Florida.

START OF CONSTRUCTION AND CONTRACT COMPLETION TIME

The Bidder agrees to begin work within fourteen (14) calendar days after the date of the Notice to Proceed and to fully complete all work under this contract within ninety **(90)** calendar days, including construction of the foundation and assembly of the structure.

LIQUIDATED DAMAGES

In the event the Bidder is awarded the Contract and fails to complete the work within the time limit or extended time limit agreed upon, as more particularly set forth in the Contract Documents, liquidated damages shall be paid to the Owner at the rate of **$250.00** per day for all work awarded until the work has been satisfactorily completed as provided by the Contract Documents. Sundays and legal holidays shall be excluded in determining days in default.

Owner will recover such liquidated damages by deducting the amount owed from the final payment or any retainage held by Owner.

ADDENDA

The Bidder hereby acknowledges that he has received Addenda No's. _____, _____, _____, _____. (Bidder shall insert No. of each Addendum received) and agrees that all addenda issued are hereby made part of the Contract Documents, and the Bidder further agrees that his Bid(s) includes all impacts resulting from said addenda.

SALES AND USE TAXES

The Bidder agrees that all federal, state, and local sales and use taxes are included in the stated bid prices for the work.

UNIT PRICE WORK ITEMS

The Bidder further proposes to accept as full payment for the Work proposed herein the amounts computed under the provisions of the Contract Documents and based on the following unit price amounts.

The Bidder agrees that the unit price represent a true measure of labor and materials required to perform the Work, including all allowances for overhead and profit for each type of work called for in these Contract Documents. The amounts shall be shown in both words and figures. In case of discrepancy, the amount shown in words shall govern.

* * * * *

BID SCHEDULE

SEAWALL REPAIR
KEY WEST HISTORIC SEAPORT

UNIT PRICE BID
Bid unit prices stated in this proposal include all costs and expenses for labor, equipment, materials, disposal and contractor's overhead and profit. Unit prices for the various work items are intended to establish a total price for completing the project in its entirety. All work and incidental costs shall be included for payment under the several scheduled items of the overall contract, and no separate payment will be made therefore.

1. Mobilization / Demobilization (10% maximum)

1 LS $_____

2. Permit Fees (to be paid at cost)

1 LS $ **8,500.00**

3. Permit Shop Drawings (as required to obtain permit)

1 LS $_____

4. Payment and Performance Bonds

1 LS $_____

5. Demolition (includes all labor, equipment and disposal for a complete product)

1 LS $_____

6. New Fire Main, Fittings and Standpipes (includes all labor and equipment for a complete product)

1 LS $_____

7. Allowance (only to be used with Owner's written direction)

1 LS $ **20,000.00**

TOTAL OF ALL EXTENDED LINE ITEMS LISTED ABOVE:

Total of lump sum items 1 - 7 $_____

_____Dollars & _____Cents
(amount written in words)

NOTE: THE TOTAL BID WILL BE THE BASIS OF EVALUATING LOW BIDDER AND BASIS OF AWARD

CONTRACTOR'S PROJECTED OPERATIONS LOAD AND COST ESTIMATE

List items to be performed by Contractor's own forces and the estimated total cost of these items. (Use additional sheets if necessary.)

SUBCONTRACTORS

The Bidder further proposes that the following subcontracting firms or businesses will be awarded subcontracts for the following portions of the work in the event that the Bidder is awarded the Contract:

_____
Portion of Work

_____
Name

_____, _____, _____, _____
Street City State Zip

_____
Portion of Work

_____
Name

_____, _____, _____, _____
Street City State Zip

_____
Portion of Work

_____
Name

_____, _____, _____, _____
Street City State Zip

_____
Portion of Work

_____
Name

_____, _____, _____, _____
Street City State Zip

SURETY

_____whose address is

_____, _____, _____, _____
Street City State Zip

_____ _____
Phone Resident Agent

BIDDER

The name of the Bidder submitting this Bid is _____

_____doing business at

_____, _____, _____, _____
Street City State Zip

_____
email address

which is the address to which all communications concerned with this Bid and with the Contract shall be sent.

The names of the principal officers of the corporation submitting this Bid, or of the partnership, or of all persons interested in this Bid as principals are as follows:

Name	Title
_____	_____
_____	_____
_____	_____
_____	_____

If Sole Proprietor or Partnership

IN WITNESS hereto the undersigned has set his (its) hand this _____ day of _____ 20___.

_____
Signature of Bidder

_____
Title

If Corporation

IN WITNESS WHEREOF the undersigned corporation has caused this instrument to be executed and its seal affixed by its duly authorized officers this ___ day of _____ 20__.

(SEAL)

_____
Name of Corporation

By _____

Title_____

Attest _____
Secretary

EXPERIENCE OF BIDDER

The Bidder states that he is an experienced Contractor and has completed similar projects within the last five (5) years.

(List similar projects, with types, names of owners, construction costs, Engineers, and references with phone numbers. Use additional sheets if necessary.)

* * * * * *

FLORIDA BID BOND

BOND NO. _____

AMOUNT: $_____

KNOW ALL MEN BY THESE PRESENTS, that _____

_____

hereinafter called the PRINCIPAL, and _____

_____

a corporation duly organized under the laws of the State of _____

having its principal place of business at _____

_____in the State of _____,

and authorized to do business in the State of Florida, as SURETY, are held and firmly bound unto

_____

hereinafter CITY OF KEY WEST called the OBLIGEE, in the sum of_____

_____ _____ DOLLARS ($_____) for

the payment for which we bind ourselves, our heirs, executors, administrators, successors, and assigns, jointly and severally, firmly by these present.

THE CONDITION OF THIS BOND IS SUCH THAT:

WHEREAS, the PRINCIPAL is herewith submitting his or its Bid Proposal for **ITB #20-003 Fire Main – Key West Historic Seaport**, said Bid Proposal, by reference thereto, being hereby made a part hereof.

WHEREAS, the PRINCIPAL contemplates submitting or has submitted a bid to the OBLIGEE for the furnishing of all labor, materials (except those to be specifically furnished by the CITY), equipment, machinery, tools, apparatus, means of transportation for, and the performance of the work covered in the Proposal and the detailed Specifications, entitled:

ITB #20-003

FIRE MAIN REPLACEMENT

KEY WEST HSITORIC SEAPORT

WHEREAS, it was a condition precedent to the submission of said bid that a cashier's check, certified check, or bid bond in the amount of 5 percent of the base bid be submitted with said bid as a guarantee that the Bidder would, if awarded the Contract, enter into a written Contract with the CITY for the performance of said Contract, within 10 working days after written notice having been given of the award of the Contract.

NOW, THEREFORE, the conditions of this obligation are such that if the PRINCIPAL within 10 consecutive calendar days after written notice of such acceptance, enters into a written Contract with the OBLIGEE and furnishes the Performance and Payment Bonds, each in an amount equal to 100 percent of the base bid, satisfactory to the CITY, then this obligation shall be void; otherwise the sum herein stated shall be due and payable to the OBLIGEE and the Surety herein agrees to pay said sum immediately upon demand of the OBLIGEE in good and lawful money of the United States of America, as liquidated damages for failure thereof of said PRINCIPAL.

Signed and sealed this _____ day of _____, 20__.

By_____
PRINCIPAL

_____
SURETY

By _____
Attorney-In-Fact

ANTI-KICKBACK AFFIDAVIT

STATE OF _____)

: SS

COUNTY OF _____)

I, the undersigned hereby duly sworn, depose and say that no portion of the sum herein bid will be paid to any employees of the City of Key West as a commission, kickback, reward or gift, directly or indirectly by me or any member of my firm or by an officer of the corporation.

By:_____

Sworn and subscribed before me this _____ day of _____20___.

NOTARY PUBLIC, State of Florida at Large

My Commission Expires:

* * * * * *

SWORN STATEMENT UNDER SECTION 287.133(3)(A)
FLORIDA STATUTES, ON PUBLIC ENTITY CRIMES

THIS FORM MUST BE SIGNED IN THE PRESENCE OF A NOTARY PUBLIC OR OTHER OFFICER AUTHORIZED TO ADMINISTER OATHS.

1. This sworn statement is submitted with Bid or Proposal for _____

_____

2. This sworn statement is submitted by_____
(name of entity submitting sworn statement)

whose business address is _____

_____

and (if applicable) its Federal Employer Identification Number (FEIN) is_____

_____

(If the entity has no FEIN, include the Social Security Number of the individual

signing this sworn statement _____

3. My name is _____
(please print name of individual signing)

and my relationship to the entity named above is _____

4. I understand that a "public entity crime" as defined in Paragraph 287.133(1)(g), Florida Statutes, means a violation of any state or federal law by a person with respect to and directly related to the transaction of business with any public entity or with an agency or political subdivision of any other state or with the United States, including but not limited to, any bid or contract for goods or services to be provided to any public or an agency or political subdivision of any other state or of the United States and involving antitrust, fraud, theft, bribery, collusion, racketeering, conspiracy, material misrepresentation.

5. I understand that "convicted" or "conviction" as defined in Paragraph 287.133(1)(b), Florida Statutes, means a finding of guilt or a conviction of a public entity crime, with or without an adjudication guilt, in any federal or state trial court of record relating to charges brought by indictment information after July 1, 1989, as a result of a jury verdict, nonjury trial, or entry of a plea of guilty or nolo contendere.

6. I understand that an "affiliate" as defined in Paragraph 287.133(1)(a), Florida Statutes, means

    1. A predecessor or successor of a person convicted of a public entity crime; or

    2. An entity under the control of any natural person who is active in the management of the entity and who has been convicted of a public entity crime. The term "affiliate" includes those officers, directors, executives, partners, shareholders, employees, members, and agents who are active in the management of an affiliate. The ownership by one person of shares constituting controlling interest in another person, or a pooling of equipment or income among persons when not for fair market value under an arm's length agreement, shall be a prima facie case that one person controls another person. A person who knowingly enters into a joint venture with a person who has been convicted of a public entity crime in Florida during the preceding 36 months shall be considered an affiliate.

7. I understand that a "person" as defined in Paragraph 287.133(1)(8), Florida Statutes, means any natural person or entity organized under the laws of any state or of the United States with the legal power to enter into a binding contract and which bids or applies to bid on contracts for the provision of goods or services let by a public entity, or which otherwise transacts or applies to transact business with public entity. The term "person" includes those officers, directors, executives, partners, shareholders, employees, members, and agents who are active in management of an entity.

8. Based on information and belief, the statement which I have marked below is true in relation to the entity submitting this sworn statement. (Please indicate which statement applies).

____Neither the entity submitting this sworn statement, nor any officers, directors, executives, partners, shareholders, employees, members, or agents who are active in management of the entity, nor any affiliate of the entity have been charged with and convicted of a public entity crime subsequent to July 1, 1989, AND (Please indicate which additional statement applies.)

_____There has been a proceeding concerning the conviction before a hearing of the State of Florida, Division of Administrative Hearings. The final order entered by the hearing officer did not place the person or affiliate on the convicted vendor list. (Please attach a copy of the final order.)

_____The person or affiliate was placed on the convicted vendor list. There has been a subsequent proceeding before a hearing officer of the State of Florida, Division of Administrative Hearings. The final order entered by the hearing officer determined that it was in the public interest to remove the person or
affiliate from the convicted vendor list. (Please attach a copy of the final order.)

_____The person or affiliate has not been put on the convicted vendor list. (Please describe any action taken by or pending with the Department of General Services.)

_____
(signature)

_____
(date)

STATE OF_____

COUNTY OF_____

PERSONALLY APPEARED BEFORE ME, the undersigned authority,

_____ who, after first being sworn by me, affixed his/her
(name of individual signing)

signature in the space provided above on this _____day of _____ , 20___.

My commission expires:

_____
NOTARY PUBLIC

CITY OF KEY WEST INDEMNIFICATION FORM

To the fullest extent permitted by law, the CONTRACTOR expressly agrees to indemnify and hold harmless the City of Key West, their officers, directors, agents and employees *(herein called the "indemnitees") from liabilities, damages, losses and costs, including but not limited to, reasonable attorney's fees and court costs, such legal expenses to include costs incurred in establishing the indemnification and other rights agreed to in this Paragraph, to persons or property, to the extent caused by the negligence, recklessness, or intentional wrongful misconduct of the CONTRACTOR, its Subcontractors or persons employed or utilized by them in the performance of the Contract. Claims by indemnitees for indemnification shall be limited to the amount of CONTRACTOR's insurance or $1 million per occurrence, whichever is greater. The parties acknowledge that the amount of the indemnity required hereunder bears a reasonable commercial relationship to the Contract and it is part of the project specifications or the bid documents, if any.

The indemnification obligations under the Contract shall not be restricted in any way by any limitation on the amount or type of damages, compensation, or benefits payable by or for the CONTRACTOR under Workers' Compensation acts, disability benefits acts, or other employee benefits acts, and shall extend to and include any actions brought by or in the name of any employee of the CONTRACTOR or of any third party to whom CONTRACTOR may subcontract a part or all of the Work. This indemnification shall continue beyond the date of completion of the work.

CONTRACTOR: _____ SEAL:

Address

_____

Signature

_____

Print Name

_____

Title

DATE: _____

EQUAL BENEFITS FOR DOMESTIC PARTNERS AFFIDAVIT

STATE OF _____)

: SS

COUNTY OF _____)

I, the undersigned hereby duly sworn, depose and say that the firm of _____

_____

provides benefits to domestic partners of its employees on the same basis as it provides benefits to employees' spouses, per City of Key West Code of Ordinances Sec. 2-799.

By:_____

Sworn and subscribed before me this _____ day of _____ 20 ___.

NOTARY PUBLIC, State of Florida at Large

My Commission Expires:

* * * * * *

CONE OF SILENCE AFFIDAVIT

STATE OF _____)

: SS

COUNTY OF _____)

I, the undersigned hereby duly sworn, depose and say that all owner(s), partners, officers, directors, employees and agents representing the firm of _____ have read and understand the limitations and procedures regarding communications concerning City of Key West Code of Ordinances Sec. 2-773 Cone of Silence.

By: _____

Sworn and subscribed before me this

_____ day of _____ 20_____.

_____

NOTARY PUBLIC, State of _____ at Large

My Commission Expires: _____

NON-COLLUSION AFFIDAVIT

STATE OF FLORIDA)
:
SS COUNTY OF MONROE)

I, the undersigned hereby declares that the only persons or parties interested in this Proposal are those named herein, that this Proposal is, in all respects, fair and without fraud, that it is made without collusion with any official of the Owner, and that the Proposal is made without any connection or collusion with any person submitting another Proposal on this Contract.

By: _____

Sworn and subscribed before me this

_____ day of _____, 20__.

_____
NOTARY PUBLIC, State of Florida at Large

My Commission Expires: _____

LOCAL VENDOR CERTIFICATION
PURSUANT TO CITY OF KEY WEST CODE OF ORDINANCES SECTION 2-798

The undersigned, as a duly authorized representative of the vendor listed herein, certifies to the best of his/her knowledge and belief, that the vendor meets the definition of a "Local Business." For purposes of this section, "local business" shall mean a business which:

a. Principle address as registered with the FL Department of State located within 30 miles of the boundaries of the city, listed with the chief licensing official as having a business tax receipt with its principle address within 30 miles of the boundaries of the city for at least one year immediately prior to the issuance of the solicitation.

b. Maintains a workforce of at least 50 percent of its employees from the city or within 30 miles of its boundaries.

c. Having paid all current license taxes and any other fees due the city at least 24 hours prior to the publication of the call for bids or request for proposals.

- Not a local vendor pursuant to Code od Ordinances Section 2-798
- Qualifies as a local vendor pursuant to Code od Ordinances Section 2-798

If you qualify, please complete the following in support of the self-certification & submit copies of your County and City business licenses. Failure to provide the information requested will result in denial of certification as a local business.

Business Name Phone:

Current Local Address: Fax:
(P.O Box numbers may not be used to establish status)

Length of time at this address

_____ _____
Signature of Authorized Representative Date

STATE OF_____
COUNTY OF_____

The foregoing instrument was acknowledged before me this _____day of _____, 20___.
By_____, of_____
(Name of officer or agent, title of officer or agent) Name of corporation acknowledging)
or has produced_____as identification
(type of identification)

_____
Signature of Notary

_____
Print, Type or Stamp Name of Notary

_____
Title or Rank

Return Completed form with
Supporting documents to:
City of Key West Purchasing

BIDDER'S CHECKLIST

(Note: The purpose of this checklist is to serve as a reminder of major items to be addressed in submitting a bid and is not intended to be all inclusive. It does not alleviate the Bidder from the responsibility of becoming familiar with all aspects of the Contract Documents and Proper completion and submission of his bid.)

1. All Contract Documents thoroughly read and understood ☐

2. All blank spaces in Bid filled in black ink. ☐

3. Total and unit Prices added correctly. ☐

4. Addenda acknowledged. ☐

5. Subcontractors are named as indicated in the Bid. ☐

6. Experience record included. ☐

7. Bid signed by authorized officer. ☐

8. Bid Bond completed and executed, including power-of-attorney, dated the same date as Bid Bond. ☐

9. Bidder familiar with federal, state, and local laws, ordinances, rules and regulations affecting performance of the work. ☐

10. Bidder, if successful, able to obtain and/or demonstrate possession of required licenses and certificates within (10) ten days after receiving a Notice of Award. ☐

11. Bid submitted intact with the volume containing the Bidding Requirements, Contract Forms and Conditions of the Contract, one (1) original, two (2) USB drives. ☐

12. Bid Documents submitted in sealed envelope and addressed and labeled in conformance with the instructions in the Invitation to Bid. ☐

13. Anti-kickback Affidavit; Public Entity Crime Form; City of Key West Indemnification Equal Benefits for Domestic Partners Affidavit; Local Vendor Certification; Non-Collusion Affidavit; Proof of Required Insurance ☐

* * * * *

PART 2

CONTRACT FORMS

CONTRACT AGREEMENT

This Contract, made and entered into _____ day of _____ 20___, by and between the City of Key West, hereinafter called the "Owner", and _____, hereinafter called the "Contractor";

WITNESSETH:

The Contractor, in consideration of the sum to be paid him by the Owner and of the covenants and agreements herein contained, hereby agrees at his own proper cost and expense to do all the work and furnish all the materials, tools, labor, and all appliances, machinery, and appurtenances for **ITB #20-003 FIRE MAIN REPLACEMENT – KEY WEST HISTORIC SEAPORT**

Key West, Florida to the extent of the Bid made by the Contractor, dated the _____ day of _____ , 20_____, all in full compliance with the Contract Documents referred to herein.

The BIDDING REQUIREMENTS, including the signed copy of the BID FORM, the CONTRACT FORMS, DRAWINGS and/or SUPPLEMENTAL INFORMATION (if any), are hereby referred to and by reference made part of this Contract as fully and completely as if the same were fully set forth herein and are mutually cooperative therewith.

In consideration of the performance of the work as set forth in these Contract Documents, the Owner agrees to pay to the Contractor the amount bid in the Bid as adjusted in accordance with the Contract Documents, or as otherwise herein provided, and to make such payments in the manner and at the times provided in the Contract Documents.

The Contractor agrees to complete the work within ninety **(90)** calendar days and to accept as full payment hereunder the amounts computed as determined by the Contract Documents and based on the said Bid.

The Contractor agrees to remedy all defects appearing in the work or developing in the materials furnished and the workmanship performed under this Contract during the warranty period after the date of final acceptance of the work by the Owner, and further agrees to indemnify and save the Owner harmless from any costs encountered in remedying such defects.

Liquidated Damages: The Contractor recognizes that time is of the essence and that the Owner will suffer financial loss if the Work is not completed within the dates specified in the paragraphs above, plus any extensions thereof allowed, in accordance with Article 58 of the General Conditions.

In the event the Contractor fails to complete the work within the time limit or extended time limit agreed upon, as more particularly set forth in the Contract Documents, liquidated damages shall be paid at a rate of **$250.00** per day. Sundays and legal holidays shall be included in determining days in default.

This contract will automatically expire upon completion of the project. Contractors warranty obligations remain in affect.

IN WITNESS WHEREOF, we, the parties hereto, each herewith subscribe the same this

_____ day of _____, A.D., 20__.

CITY OF KEY WEST

By_____

Printed_____

Title_____

CONTRACTOR

By_____

Printed_____

Title_____

APPROVED AS TO FORM

_____
Attorney for Owner

* * * * * *

FLORIDA PERFORMANCE BOND

BOND NO._____

AMOUNT: $_____

KNOW ALL MEN BY THESE PRESENTS, that in accordance with Florida Statutes Section

255.05 _____

with offices at _____

hereinafter called the CONTRACTOR (Principal), and

_____

with offices at_____

a corporation duly organized and existing under and by virtue of the laws of the State of Florida, hereinafter called the SURETY, and authorized to transact business within the State of Florida, as SURETY, are held and firmly bound unto the **CITY OF KEY WEST,** hereinafter called the CITY (Obligee), in the sum of:

_____DOLLARS ($_____), lawful money of the United States of America, for the payment of which, well and truly be made to the CITY, the CONTRACTOR and the SURETY bind themselves and each of their heirs, executors, administrators, successors, and assigns, jointly and severally, firmly by these presents as follows:

THE CONDITION OF THE ABOVE OBLIGATION IS SUCH THAT:
WHEREAS, the CONTRACTOR has executed and entered into a certain Contract hereto attached, with the CITY, dated _____, 20__, to furnish at his own cost, charges, and expense all the necessary materials, equipment, and/or labor in strict and express accordance with said Contract and the Contract Documents as defined therein, all of which is made a part of said Contract by certain terms and conditions in said Contract more particularly mentioned, which Contract, consisting of the various Contract Documents is made a part of this Bond as fully and completely as if said Contract Documents were set forth herein;

NOW THEREFORE, the conditions of this obligation are such that if the above bounden CONTRACTOR:

1. Shall in all respects comply with the terms and conditions of said Contract and his obligation there under, including the Contract Documents (which include the scope of work and conditions as prepared by the CITY, invitation to bid, instructions to bidders, the CONTRACTOR'S bid as accepted by the above CITY, the bid and contract performance and payment bonds (Not required as part of this contract), and all addenda, if any, issued prior to the opening of bids), being made a part of this bond by reference, at the times and in the manner prescribed in the contract; and

2. Promptly makes payments to all claimants, as defined in Section 255.05(1), Florida Statutes, supplying PRINCIPAL with labor, materials, or supplies, used directly or indirectly by PRINCIPAL in the prosecution of the work provided for in the contract; and

3. Pays CITY all losses, costs, expenses, damages, attorney's fees, including appellate proceedings, injury or loss of whatever kind and however arising including, without limitation, delay damages to which said CITY may be subject by reason of any wrongdoing, misconduct, want of care or skill, negligence, failure of performance, breach, failure to petition within the prescribed time, or default, including patent infringements, on the part of said CONTRACTOR, his agents or employees, in the execution or performance of said Contract; and

4. Performs the guarantee of all work and materials furnished under the contract for the time specified in the contract, then this obligation shall be void; otherwise, to remain in full force and effect for the term of said Contract.

AND, the said Surety for value received, hereby stipulates and agrees that no change involving any extension of time, or addition to the terms of the Contract Documents, or to the work to be performed, or materials to be furnished there under shall affect said obligation of said Surety on this Bond, and the said Surety does hereby waive notice of any such changes, extension of time, alterations, or additions of the terms of the Contract Documents, or to the work.

Any action instituted by a claimant under this bond for payment must be in accordance with the notice and time limitation provisions in Section 255.05(2), Florida Statutes.

IN WITNESS WHEREOF, the above parties bonded together have executed this instrument

this _____ day of _____, 20__, the name and corporate seal of each corporate party being hereto affixed and those presents duly signed by its undersigned representative, pursuant to authority of its governing body.

CONTRACTOR

By: _____

(SEAL)

ATTEST

SURETY

By: _____

(SEAL)

ATTEST

FLORIDA PAYMENT BOND

BOND NO._____

AMOUNT: $_____

KNOW ALL MEN BY THESE PRESENTS, that in accordance with Florida Statutes Section

255.05,_____

with offices at_____
hereinafter called the CONTRACTOR, (Principal), and

_____

with offices at _____

a corporation duly organized and existing under and by virtue of the laws of the State of _____

_____ , hereinafter called the SURETY, and authorized to transact business within the State of Florida, as SURETY, are held and firmly bound unto CITY OF KEY WEST**,** hereinafter called the City (Obligee), in the sum of:

_____DOLLARS(_____), lawful money of the United States of America, for the payment of which, well and truly be made to the CITY, and the CONTRACTOR and the SURETY bind themselves and each of their heirs, executors, administrators, successors, and assigns, jointly and severally, firmly by these presents as follows:

THE CONDITION OF THE ABOVE OBLIGATION IS SUCH THAT:

WHEREAS, the CONTRACTOR has executed and entered into a certain Contract for

ITB #20-003 FIRE MAIN REPLACEMENT – KEY WEST HISTORIC SEAPORT attached hereto, with

the CITY, dated_____

_____, 20__, to furnish at his own cost, charges, and expense the necessary materials, equipment, and/or labor in strict and express accordance with said Contract and the plans, drawings (if any), and specifications prepared by the CITY, all of which is made a part of said Contract by certain terms and conditions in said Contract more particularly mentioned, which Contract, consisting of the various Contract Documents specifically mentioned herein and relative hereto, is made a part of this Bond as fully and completely as if said Contract Documents were set forth herein.

NOW THEREFORE, the conditions of this obligation are such that if the above bounden CONTRACTOR shall in all respects comply with the terms and conditions of said Contract and his obligation thereunder, including the Contract Documents, which include Scope of work and conditions prepared by the CITY, invitation to bid, instructions to bidders, the

CONTRACTOR'S bid as accepted by the CITY, the bid and contract and payment bonds (Not required as part of this contract), and all addenda, if any, issued prior to the opening of bids), and further that if said CONTRACTOR shall promptly make payments to all persons supplying materials, equipment, and/or labor, used directly or indirectly by said CONTRACTOR or subcontractors in the prosecution of the work for said contract is accordance with Florida Statutes, Section 255.05 or Section 713.23, then this obligation shall be void; otherwise to remain in full force and effect for the term of said contract, including and all guarantee periods as specifically mentioned in said Contract Documents.

AND, the said SURETY for value received, hereby stipulates and agrees that no change involving any extension of time, or addition to the terms of the Contract or to the work to be performed, or materials to be furnished thereunder, or in the Contract Documents and specifications accompanying the said contract shall affect said obligation of said SURETY on this Bond, and the said SURETY does hereby waive notice of any such changes, extension of time, alternations, or additions of the terms of the Contract, or to the work, to the Contract Documents, or to the specifications.

Claimant shall give written notice to the CONTRACTOR and the SURETY as required by Section 255.05 or Section 713.23, Florida Statutes. Any action instituted against the CONTRACTOR or SURETY under this bond for payment must be in accordance with the notice and time limitation provisions in Section 255.05(2) or Section 713.23, Florida Statutes.

IN WITNESS WHEREOF, the above parties bounded together have executed this instrument

this _____ day of _____, 20__, the name and corporate seal of each corporate party being hereto affixed and those presents duly signed by its undersigned representative, pursuant to authority of its governing body.

CONTRACTOR

By:_____

(SEAL)

ATTEST

SURETY

By:_____

(SEAL)

ATTEST

LICENSE REQUIREMENT AND COST

License required for this Project. Contractor must be general contractor or building contractor.

Cost Not To Exceed $410.00.

CITY OF KEY WEST BUSINESS LICENSE TAX RECEIPT

A City of Key West Business License Tax Receipt is required for this project. Contractor must be general contractor, building contractor or engineering contractor. Cost not to exceed $410.00.

City of Key West Business License Tax Receipt may be found on the city website.

http://www.keywestcity.com/egov/docs/1162843921181.htm

PART 3

SUPPLEMENTAL INFORMATION

PRELIMINARY DESIGN DEVELOPMENT DRAWINGS

KEY WEST BIGHT DOCKS

KEY WEST, FLORIDA

FIRE PROTECTION PLAN	
DWN BY:	KAG
SCALE:	1"=20'
DATE:	
DWG:	_B5-FIRE

GARY'S PLUMBING & FIRE INC
6409 2ND TERRACE WEST SUITE 1
KEY WEST, FLORIDA 33040

KENNETH A GONCI
LICENSE
No. 61685
STATE OF FLORIDA
PROFESSIONAL ENGINEER
K. ANDREW GONCI P.E. 61685

KAD ENGINEERING & CONSULTING, LLC
14934 SKIPJACK LOOP
BRADENTON, FL 34202
PHONE: (941) 545-6407

Sheet Description:
DOCK FIRE AND WATER PIPING PLAN

Copyright 2019 KAD ENGINEERING & CONSULTING

Sheet No.:
FP0

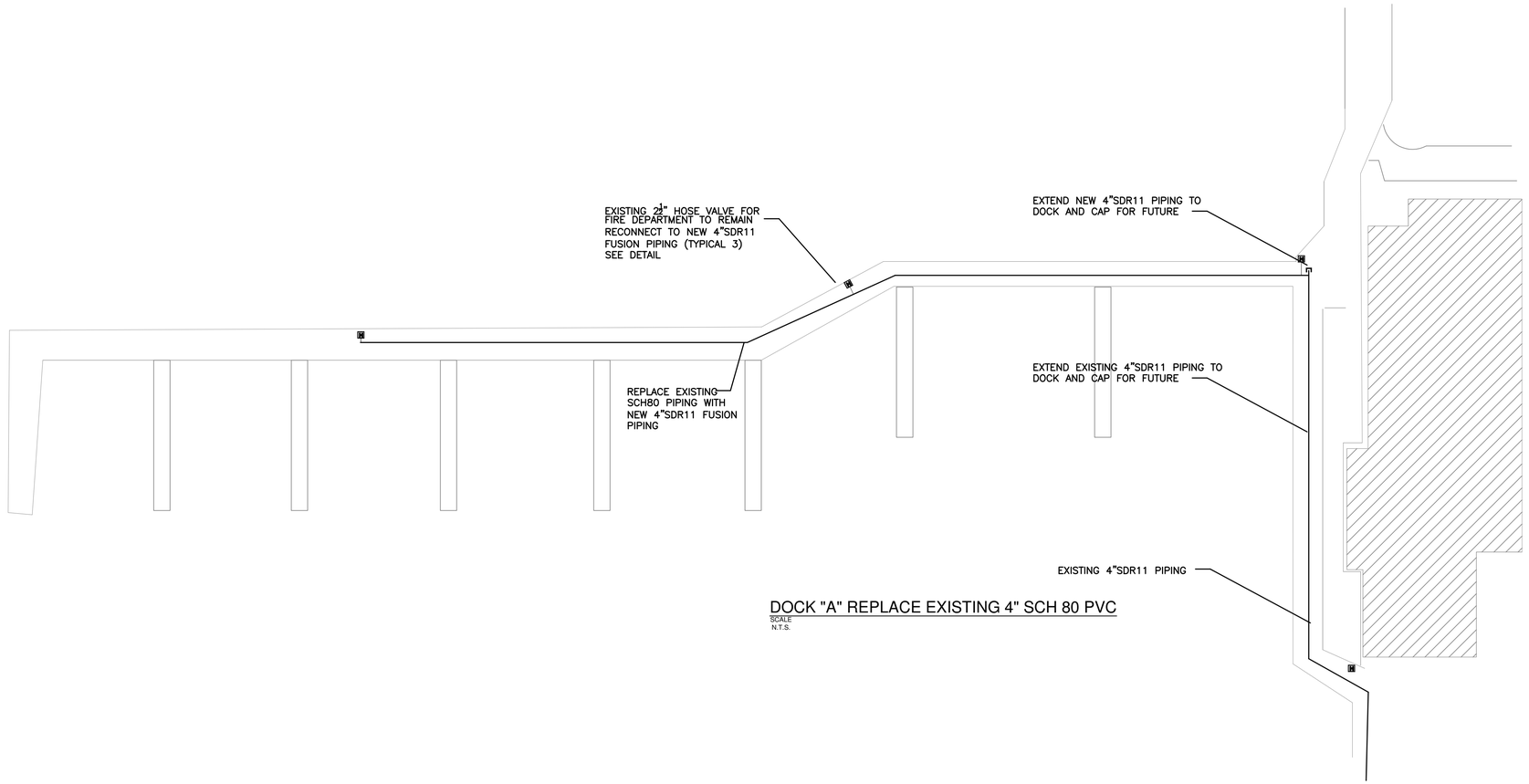

DOCK "A" REPLACE EXISTING 4" SCH 80 PVC

SCALE
N.T.S.

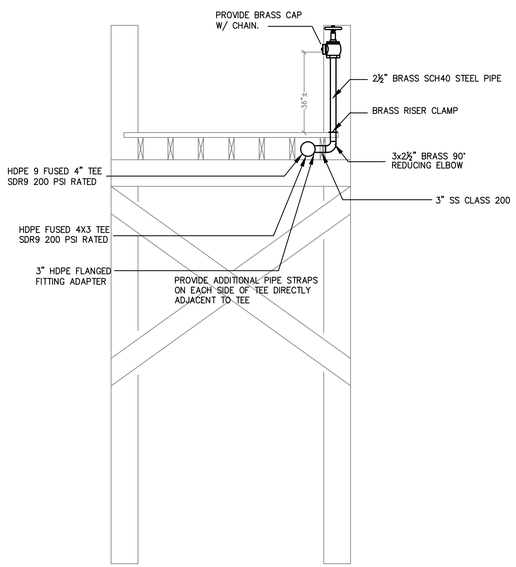

DOCK SECTION

SCALE
N.T.S.

DOCK FRAMING PLAN WITH DEVICES

1"=20'

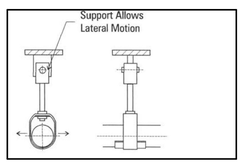

HDPE PIPE HANGER DETAIL WITH STIFFNER

SCALE
N.T.S.

SITE PIPING

PIPING TO BE AS FOLLOWS: HDPE PIPING (DRISCOPLEX OR EQUAL) SHALL BE LISTED FOR THE APPLICATION.

UNDERGROUND SITE PIPING FOR THE STANDPIPE SYSTEM SHALL BE DR 9 HDPE PIPING WHERE SHOWN. HDPE PIPING SHALL BE PROVIDED WITH ANCHORING TO PREVENT FLOTATION IN ACCORDANCE WITH THE MANUFACTURER'S LISTING. RISER PIPING SHALL BE BRASS PIPING.

EXPOSED PIPING UNDER THE DOCK SHALL BE SDR 9 HDPE PIPING. PIPING WHERE CONNECTED TO AN MJ FITTING SHALL BE RESTRAINED TO AVOID THE POISSION EFFECT. RISER SHALL BE BRASS SCH 40.

HDPE PIPING SHALL BE INSTALLED IN ACCORDANCE WITH THE MANUFACTURER'S LISTING AND SHALL ALLOW FOR THERMAL EXPANSION, AND BE RESTRAINED ACCORDINGINGLY

ABOVE GRADE PIPING SUPPORT SHALL CRADEL AT LEAST 120° OF THE PIPE AND BE AT LEAST 1/2 THE PIPE DIAMETER WIDE. EDGES SHALL BE ROUNDED OR ROLLED TO PREVENT CUTTING INTO THE PIPE. HANGER SPACING SHALL NOT EXCEED 6'–0" OR THAT RECOMMENDED BY MANUFACTURER.

STANDPIPE SYSTEM CLASS I

SYSTEM SHALL BE DESIGNED AND INSTALLED IN ACCORDANCE WITH THE FLORIDA FIRE PREVENTION CODE 5TH EDITION (FFPC) CHAPTER 13.2, 13.3, 13.5.1 NFPA 14 2010, NFPA 24 2010 AND CORRESPONDING REFERENCES FOR AN AUTOMATIC WET STANDPIPE SYSTEM.

ALL PIPING USED FOR THE STANDPIPE SYSTEM SHALL BE RATED FOR 200 PSI CONTINUAL WORKING PRESSURE.

EXPOSED PIPING UNDER THE DOCK SHALL BE SDR9 HDPE AND SHALL BE PROTECTED FROM EXPOSURE FIRE IN ACCORDANCE WITH NFPA 303.

ALL HANGERS AND HARDWARE SHALL BE STAINLESS STEEL. ALL PIPE LOOP HANGERS SHALL BE EQUIPPED WITH HDPE PIPE STIFFNERS AND ALLOW FOR LATERAL MOVEMENT AS REQUIRED BY THE MANUFACTURER. (SEE DETAIL)

A CLASS I STANDPIPE SYSTEM SHALL BE PROVIDED WITH 2½" HOSE CONNECTIONS AT LOCATIONS TO BE APPROVED BY LOCAL AHJ.

IDENTIFICATION OF HOSE VALVES SHALL BE IN ACCORDANCE WITH NFPA 14–6.4.5.

HOSE VALVES SHALL BE PRESSURE–REGULATING TYPE TO LIMIT THE RESIDUAL PRESSURE TO 100 PSI. ALL HOSE VALVES SHALL BE FIELD ADJUSTABLE AND SHALL BE ADJUSTED IN THE FIELD. NFPA 14–7.2.3.

FLORIDA FIRE PREVENTION CODE 5TH EDITION

SYSTEM SHALL BE DESIGNED AND INSTALLED IN ACCORDANCE WITH THE FLORIDA FIRE PREVENTION CODE 5TH EDITION (FFPC) CHAPTER 28 AND CORRESPONDING REFERENCES.

28.1.1 CONSTRUCTION OF MULTIPLE DOCKING FACILITIES AT MULTI–FAMILY RESIDENCES SHALL COMPLY WITH NFPA 303.

PORTABLE FIRE EXTINGUISHERS SHALL BE PROVIDED AND INSTALLED IN ACCORDANCE WITH FFPC 28.1.6.1. NFPA 10 2010 AND SHALL BE LISTED FOR CLASS A, B, AND C FIRES. THE DISTANCE FROM ANY POINT ON THE DOCK TO AN EXTINGUISHER SHALL NOT EXCEED 75 FEET. THIS IS NOT UNDER THE SCOPE OF THIS WORK.

INSTALLATION OF FIRE EXTINGUISHERS SHALL BE IN ACCORDANCE WITH NFPA 303 2010 CHAPTER 6. INSTALLING CONTRACTOR SHALL BE FAMILIAR WITH THIS SECTION OF THE CODE. NOT UNDER THE SCOPE OF THIS CONTRACTOR'S WORK.

FIRE STANDPIPE SYSTEM SHALL BE PROVIDED AND INSTALLED IN ACCORDANCE WITH FFPC 28.1.6.3. LOCATION OF ALL HOSE VALVES, EXTINGUISHERS ETC. SHALL BE APPROVED BY THE LOCAL AHJ PRIOR TO INSTALLING.

HYDRANT AND WATER SUPPLIES SHALL BE INSTALLED WITH IN ACCORDANCE WITH FFPC 13.2, 13.3 AND 13.5.1.

LIGHTING IS NOT COVERED UNDER THESE PLANS BUT SHALL BE PROVIDED IN ACCORDANCE WITH FFPC 28.1.7.1.3.

FIRE DEPARTMENT ACCESS SHALL BE PROVIDED IN ACCORDANCE WITH 28.1.7.2.1.8.

PRELIMINARY DESIGN DEVELOPMENT DRAWINGS

KEY WEST BIGHT DOCKS

KEY WEST, FLORIDA

FIRE PROTECTION PLAN	
DWN BY:	KAG
SCALE:	1"=20'
DATE:	
DWG:	_B5–FIRE

GARY'S PLUMBING & FIRE INC
6409 2ND TERRACE WEST SUITE 1
KEY WEST, FLORIDA 33040

KENNETH A GONCI
LICENSE
No. 61685
STATE OF FLORIDA
PROFESSIONAL ENGINEER
K. ANDREW GONCI P.E. 61685

KAD ENGINEERING & CONSULTING, LLC
14934 SKIPJACK LOOP
BRADENTON, FL 34202
PHONE: (941) 545-6407

Sheet Description:
DOCK A STANDPIPE

Copyright 2019 KAD ENGINEERING & CONSULTING

Sheet No.:
FP1

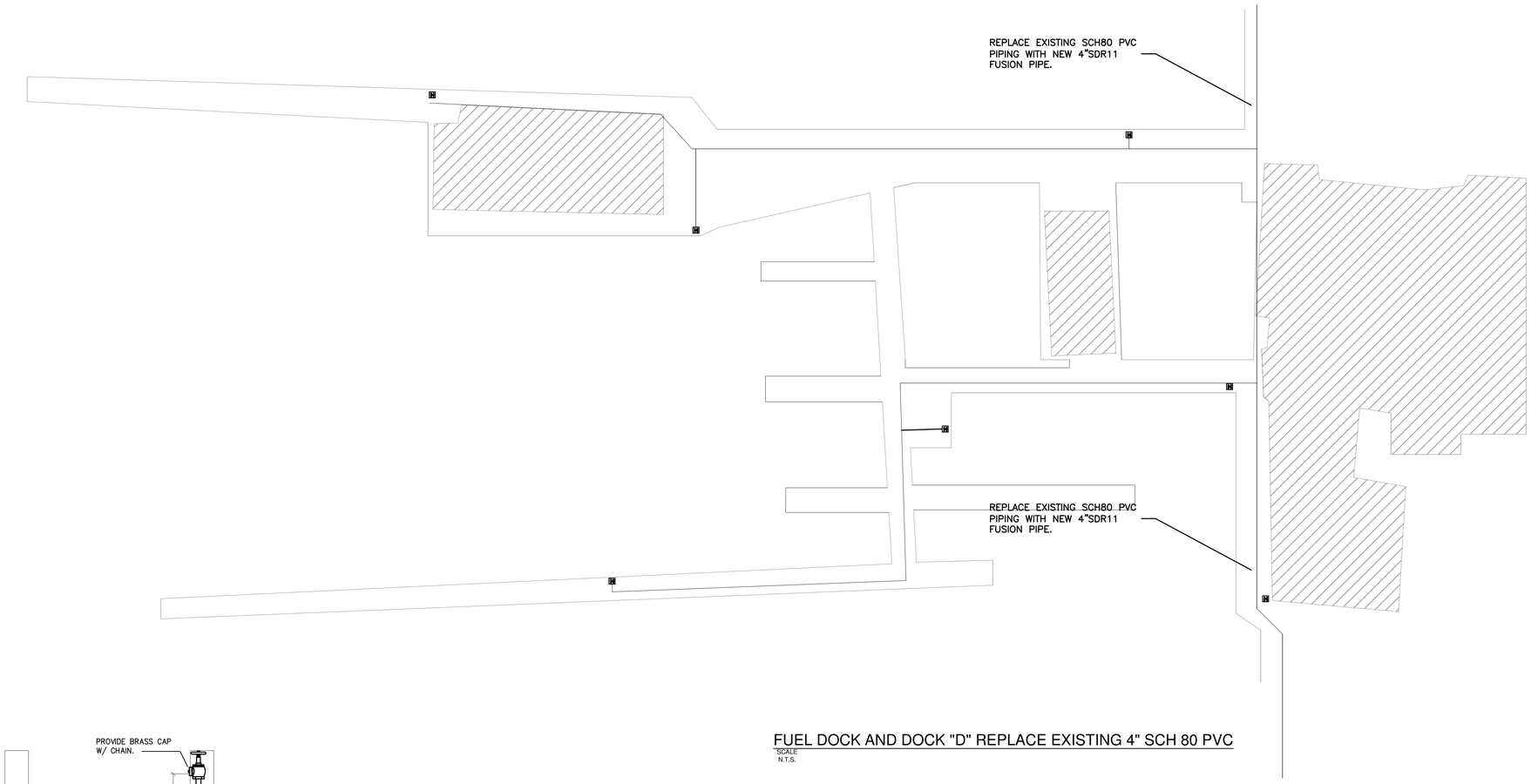

FUEL DOCK AND DOCK "D" REPLACE EXISTING 4" SCH 80 PVC

SCALE
N.T.S.

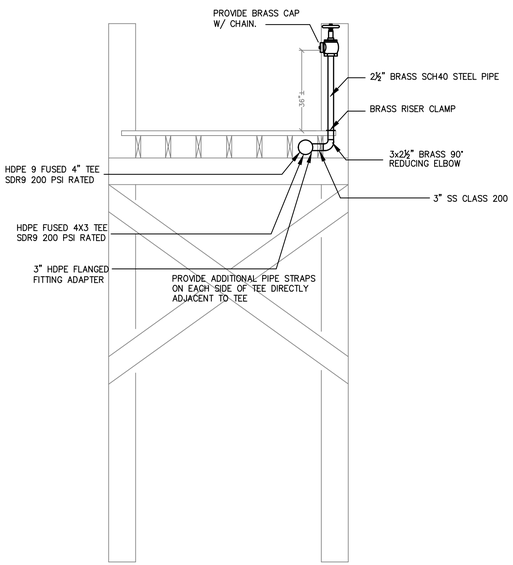

DOCK SECTION

SCALE
N.T.S.

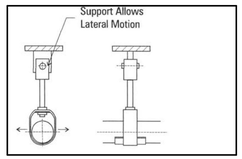

HDPE PIPE HANGER DETAIL WITH STIFFNER

SCALE
N.T.S.

SITE PIPING

PIPING TO BE AS FOLLOWS: HDPE PIPING (DRISCOPLEX OR EQUAL) SHALL BE LISTED FOR THE APPLICATION.

UNDERGROUND SITE PIPING FOR THE STANDPIPE SYSTEM SHALL BE DR 9 HDPE PIPING WHERE SHOWN. HDPE PIPING SHALL BE PROVIDED WITH ANCHORING TO PREVENT FLOTATION IN ACCORDANCE WITH THE MANUFACTURER'S LISTING. RISER PIPING SHALL BE BRASS PIPING.

EXPOSED PIPING UNDER THE DOCK SHALL BE SDR 9 HDPE PIPING. PIPING WHERE CONNECTED TO AN MJ FITTING SHALL BE RESTRAINED TO AVOID THE POISSION EFFECT. RISER SHALL BE BRASS SCH 40.

HDPE PIPING SHALL BE INSTALLED IN ACCORDANCE WITH THE MANUFACTURER'S LISTING AND SHALL ALLOW FOR THERMAL EXPANSION, AND BE RESTRAINED ACCORDINGINGLY

ABOVE GRADE PIPING SUPPORT SHALL CRADEL AT LEAST 120° OF THE PIPE AND BE AT LEAST 1/2 THE PIPE DIAMETER WIDE. EDGES SHALL BE ROUNDED OR ROLLED TO PREVENT CUTTING INTO THE PIPE. HANGER SPACING SHALL NOT EXCEED 6'–0" OR THAT RECOMMENDED BY MANUFACTURER.

STANDPIPE SYSTEM CLASS I

SYSTEM SHALL BE DESIGNED AND INSTALLED IN ACCORDANCE WITH THE FLORIDA FIRE PREVENTION CODE 5TH EDITION (FFPC) CHAPTER 13.2, 13.3, 13.5.1 NFPA 14 2010, NFPA 24 2010 AND CORRESPONDING REFERENCES FOR AN AUTOMATIC WET STANDPIPE SYSTEM.

ALL PIPING USED FOR THE STANDPIPE SYSTEM SHALL BE RATED FOR 200 PSI CONTINUAL WORKING PRESSURE.

EXPOSED PIPING UNDER THE DOCK SHALL BE SDR9 HDPE AND SHALL BE PROTECTED FROM EXPOSURE FIRE IN ACCORDANCE WITH NFPA 303.

ALL HANGERS AND HARDWARE SHALL BE STAINLESS STEEL. ALL PIPE LOOP HANGERS SHALL BE EQUIPPED WITH HDPE PIPE STIFFNERS AND ALLOW FOR LATERAL MOVEMENT AS REQUIRED BY THE MANUFACTURER. (SEE DETAIL)

A CLASS I STANDPIPE SYSTEM SHALL BE PROVIDED WITH 2½" HOSE CONNECTIONS AT LOCATIONS TO BE APPROVED BY LOCAL AHJ.

IDENTIFICATION OF HOSE VALVES SHALL BE IN ACCORDANCE WITH NFPA 14–6.4.5.

HOSE VALVES SHALL BE PRESSURE–REGULATING TYPE TO LIMIT THE RESIDUAL PRESSURE TO 100 PSI. ALL HOSE VALVES SHALL BE FIELD ADJUSTABLE AND SHALL BE ADJUSTED IN THE FIELD. NFPA 14–7.2.3.

FLORIDA FIRE PREVENTION CODE 5TH EDITION

SYSTEM SHALL BE DESIGNED AND INSTALLED IN ACCORDANCE WITH THE FLORIDA FIRE PREVENTION CODE 5TH EDITION (FFPC) CHAPTER 28 AND CORRESPONDING REFERENCES.

28.1.1 CONSTRUCTION OF MULTIPLE DOCKING FACILITIES AT MULTI–FAMILY RESIDENCES SHALL COMPLY WITH NFPA 303.

PORTABLE FIRE EXTINGUISHERS SHALL BE PROVIDED AND INSTALLED IN ACCORDANCE WITH FFPC 28.1.6.1. NFPA 10 2010 AND SHALL BE LISTED FOR CLASS A, B, AND C FIRES. THE DISTANCE FROM ANY POINT ON THE DOCK TO AN EXTINGUISHER SHALL NOT EXCEED 75 FEET. THIS IS NOT UNDER THE SCOPE OF THIS WORK.

INSTALLATION OF FIRE EXTINGUISHERS SHALL BE IN ACCORDANCE WITH NFPA 303 2010 CHAPTER 6. INSTALLING CONTRACTOR SHALL BE FAMILIAR WITH THIS SECTION OF THE CODE. NOT UNDER THE SCOPE OF THIS CONTRACTOR'S WORK.

FIRE STANDPIPE SYSTEM SHALL BE PROVIDED AND INSTALLED IN ACCORDANCE WITH FFPC 28.1.6.3. LOCATION OF ALL HOSE VALVES, EXTINGUISHERS ETC. SHALL BE APPROVED BY THE LOCAL AHJ PRIOR TO INSTALLING.

HYDRANT AND WATER SUPPLIES SHALL BE INSTALLED WITH IN ACCORDANCE WITH FFPC 13.2, 13.3 AND 13.5.1.

LIGHTING IS NOT COVERED UNDER THESE PLANS BUT SHALL BE PROVIDED IN ACCORDANCE WITH FFPC 28.1.7.1.3.

FIRE DEPARTMENT ACCESS SHALL BE PROVIDED IN ACCORDANCE WITH 28.1.7.2.1.8.

PRELIMINARY DESIGN DEVELOPMENT DRAWINGS

FIRE PROTECTION PLAN

DWN BY:	KAG
SCALE:	1"=20'
DATE:	
DWG:	_B5–FIRE

KEY WEST BIGHT DOCKS

KEY WEST, FLORIDA

GARY'S PLUMBING & FIRE INC
6409 2ND TERRACE WEST SUITE 1
KEY WEST, FLORIDA 33040

KENNETH A GONCI
LICENSE
No. 61685
STATE OF FLORIDA
PROFESSIONAL ENGINEER
K. ANDREW GONCI P.E. 61685

KAD ENGINEERING & CONSULTING, LLC
14934 SKIPJACK LOOP
BRADENTON, FL 34202
PHONE: (941) 545-6407

Sheet Description:
DOCK "D" AND FUEL DOCK STANDPIPE

Copyright 2019 KAD ENGINEERING & CONSULTING

Sheet No.:
FP2

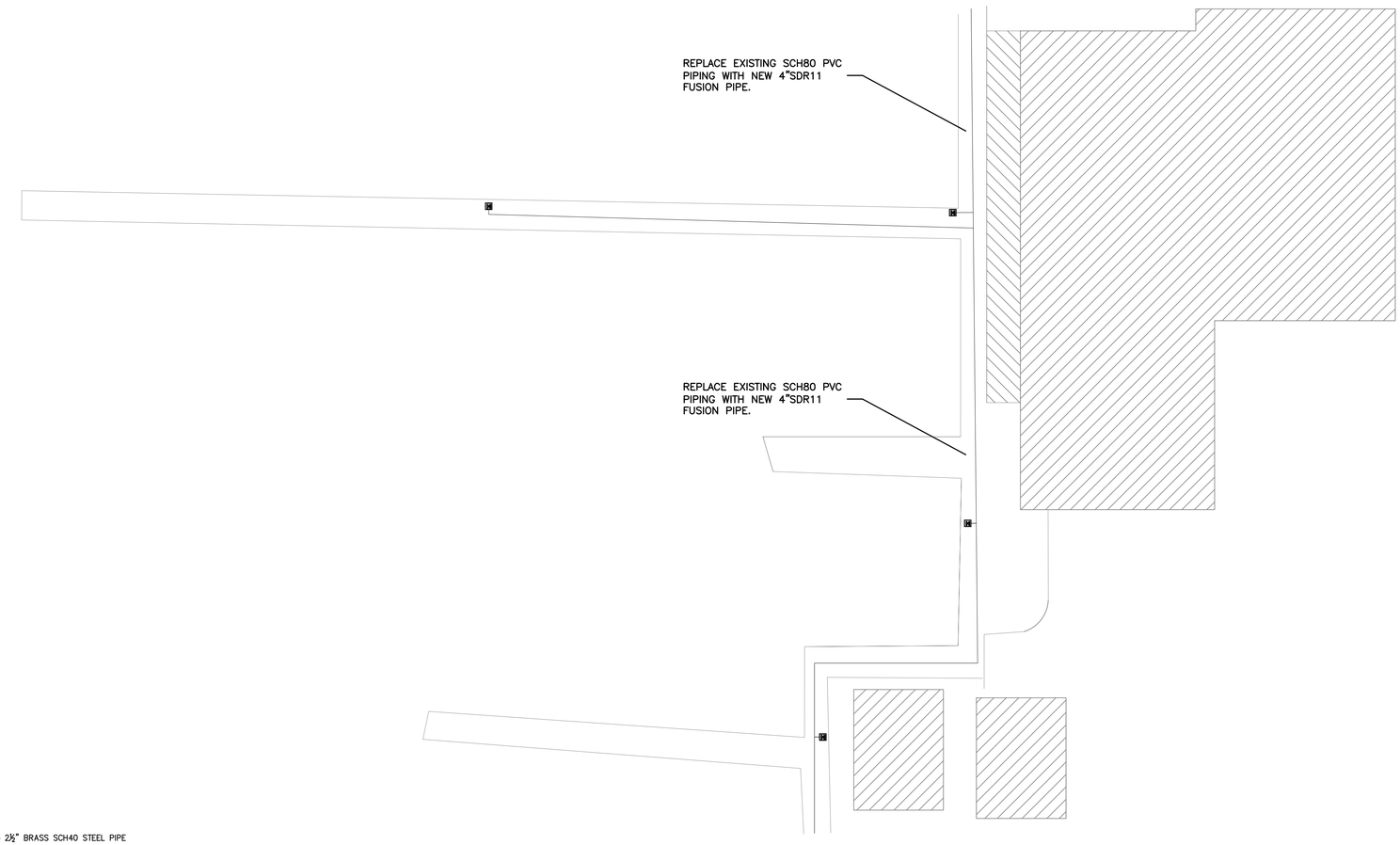

DOCKS "E" & "F" REPLACE EXISTING 4" SCH 80 PVC

SCALE
N.T.S.

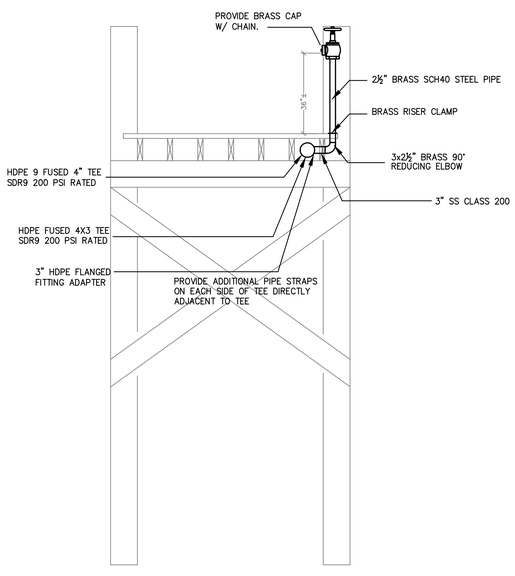

DOCK SECTION

SCALE
N.T.S.

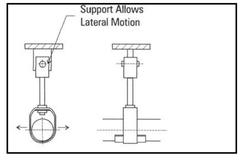

HDPE PIPE HANGER DETAIL WITH STIFFNER

SCALE
N.T.S.

SITE PIPING

PIPING TO BE AS FOLLOWS: HDPE PIPING (DRISCOPLEX OR EQUAL) SHALL BE LISTED FOR THE APPLICATION.

UNDERGROUND SITE PIPING FOR THE STANDPIPE SYSTEM SHALL BE DR 9 HDPE PIPING WHERE SHOWN. HDPE PIPING SHALL BE PROVIDED WITH ANCHORING TO PREVENT FLOTATION IN ACCORDANCE WITH THE MANUFACTURER'S LISTING. RISER PIPING SHALL BE BRASS PIPING.

EXPOSED PIPING UNDER THE DOCK SHALL BE SDR 9 HDPE PIPING. PIPING WHERE CONNECTED TO AN MJ FITTING SHALL BE RESTRAINED TO AVOID THE POISSION EFFECT. RISER SHALL BE BRASS SCH 40.

HDPE PIPING SHALL BE INSTALLED IN ACCORDANCE WITH THE MANUFACTURER'S LISTING AND SHALL ALLOW FOR THERMAL EXPANSION, AND BE RESTRAINED ACCORDINGINGLY

ABOVE GRADE PIPING SUPPORT SHALL CRADEL AT LEAST 120° OF THE PIPE AND BE AT LEAST 1/2 THE PIPE DIAMETER WIDE. EDGES SHALL BE ROUNDED OR ROLLED TO PREVENT CUTTING INTO THE PIPE. HANGER SPACING SHALL NOT EXCEED 6'–0" OR THAT RECOMMENDED BY MANUFACTURER.

STANDPIPE SYSTEM CLASS I

SYSTEM SHALL BE DESIGNED AND INSTALLED IN ACCORDANCE WITH THE FLORIDA FIRE PREVENTION CODE 5TH EDITION (FFPC) CHAPTER 13.2, 13.3, 13.5.1 NFPA 14 2010, NFPA 24 2010 AND CORRESPONDING REFERENCES FOR AN AUTOMATIC WET STANDPIPE SYSTEM.

ALL PIPING USED FOR THE STANDPIPE SYSTEM SHALL BE RATED FOR 200 PSI CONTINUAL WORKING PRESSURE.

EXPOSED PIPING UNDER THE DOCK SHALL BE SDR9 HDPE AND SHALL BE PROTECTED FROM EXPOSURE FIRE IN ACCORDANCE WITH NFPA 303.

ALL HANGERS AND HARDWARE SHALL BE STAINLESS STEEL. ALL PIPE LOOP HANGERS SHALL BE EQUIPPED WITH HDPE PIPE STIFFNERS AND ALLOW FOR LATERAL MOVEMENT AS REQUIRED BY THE MANUFACTURER. (SEE DETAIL)

A CLASS I STANDPIPE SYSTEM SHALL BE PROVIDED WITH 2½" HOSE CONNECTIONS AT LOCATIONS TO BE APPROVED BY LOCAL AHJ.

IDENTIFICATION OF HOSE VALVES SHALL BE IN ACCORDANCE WITH NFPA 14–6.4.5.

HOSE VALVES SHALL BE PRESSURE–REGULATING TYPE TO LIMIT THE RESIDUAL PRESSURE TO 100 PSI. ALL HOSE VALVES SHALL BE FIELD ADJUSTABLE AND SHALL BE ADJUSTED IN THE FIELD. NFPA 14–7.2.3.

FLORIDA FIRE PREVENTION CODE 5TH EDITION

SYSTEM SHALL BE DESIGNED AND INSTALLED IN ACCORDANCE WITH THE FLORIDA FIRE PREVENTION CODE 5TH EDITION (FFPC) CHAPTER 28 AND CORRESPONDING REFERENCES.

28.1.1 CONSTRUCTION OF MULTIPLE DOCKING FACILITIES AT MULTI–FAMILY RESIDENCES SHALL COMPLY WITH NFPA 303.

PORTABLE FIRE EXTINGUISHERS SHALL BE PROVIDED AND INSTALLED IN ACCORDANCE WITH FFPC 28.1.6.1. NFPA 10 2010 AND SHALL BE LISTED FOR CLASS A, B, AND C FIRES. THE DISTANCE FROM ANY POINT ON THE DOCK TO AN EXTINGUISHER SHALL NOT EXCEED 75 FEET. THIS IS NOT UNDER THE SCOPE OF THIS WORK.

INSTALLATION OF FIRE EXTINGUISHERS SHALL BE IN ACCORDANCE WITH NFPA 303 2010 CHAPTER 6. INSTALLING CONTRACTOR SHALL BE FAMILIAR WITH THIS SECTION OF THE CODE. NOT UNDER THE SCOPE OF THIS CONTRACTOR'S WORK.

FIRE STANDPIPE SYSTEM SHALL BE PROVIDED AND INSTALLED IN ACCORDANCE WITH FFPC 28.1.6.3. LOCATION OF ALL HOSE VALVES, EXTINGUISHERS ETC. SHALL BE APPROVED BY THE LOCAL AHJ PRIOR TO INSTALLING.

HYDRANT AND WATER SUPPLIES SHALL BE INSTALLED WITH IN ACCORDANCE WITH FFPC 13.2, 13.3 AND 13.5.1.

LIGHTING IS NOT COVERED UNDER THESE PLANS BUT SHALL BE PROVIDED IN ACCORDANCE WITH FFPC 28.1.7.1.3.

FIRE DEPARTMENT ACCESS SHALL BE PROVIDED IN ACCORDANCE WITH 28.1.7.2.1.8.

PRELIMINARY DESIGN DEVELOPMENT DRAWINGS

FIRE PROTECTION PLAN

DWN BY: KAG
SCALE: 1"=20'
DATE:
DWG: _B5–FIRE

KEY WEST BIGHT DOCKS

KEY WEST, FLORIDA

GARY'S PLUMBING & FIRE INC
6409 2ND TERRACE WEST SUITE 1
KEY WEST, FLORIDA 33040

KENNETH A GONCI
LICENSE
No. 61685
STATE OF FLORIDA
PROFESSIONAL ENGINEER
K. ANDREW GONCI P.E. 61685

KAD ENGINEERING & CONSULTING, LLC
14934 SKIPJACK LOOP
BRADENTON, FL 34202
PHONE: (941) 545-6407

Sheet Description:
DOCK E & F STANDPIPE

Copyright 2019 KAD ENGINEERING & CONSULTING

Sheet No.:
FP3

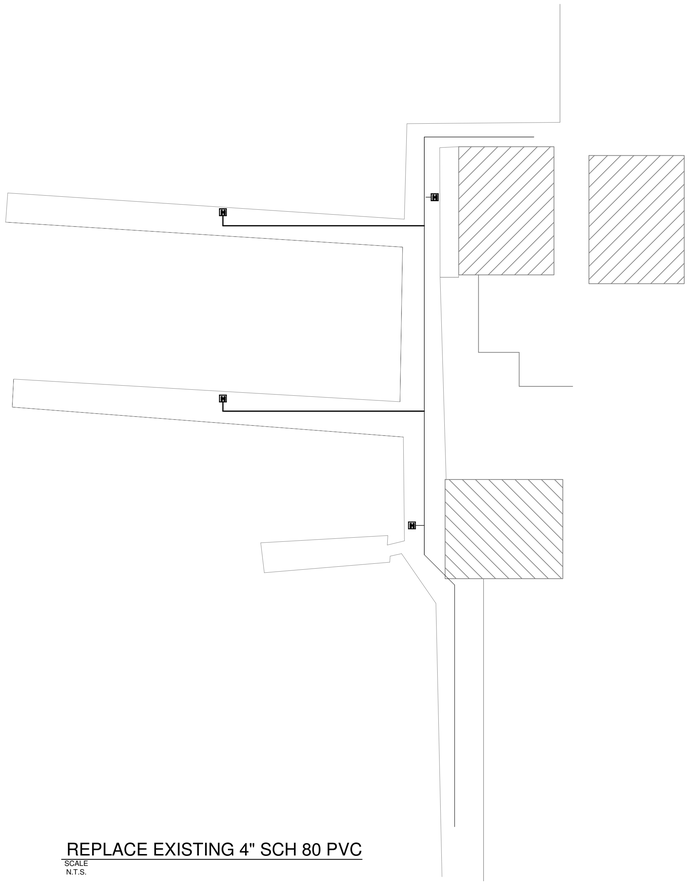

REPLACE EXISTING 4" SCH 80 PVC
SCALE
N.T.S.

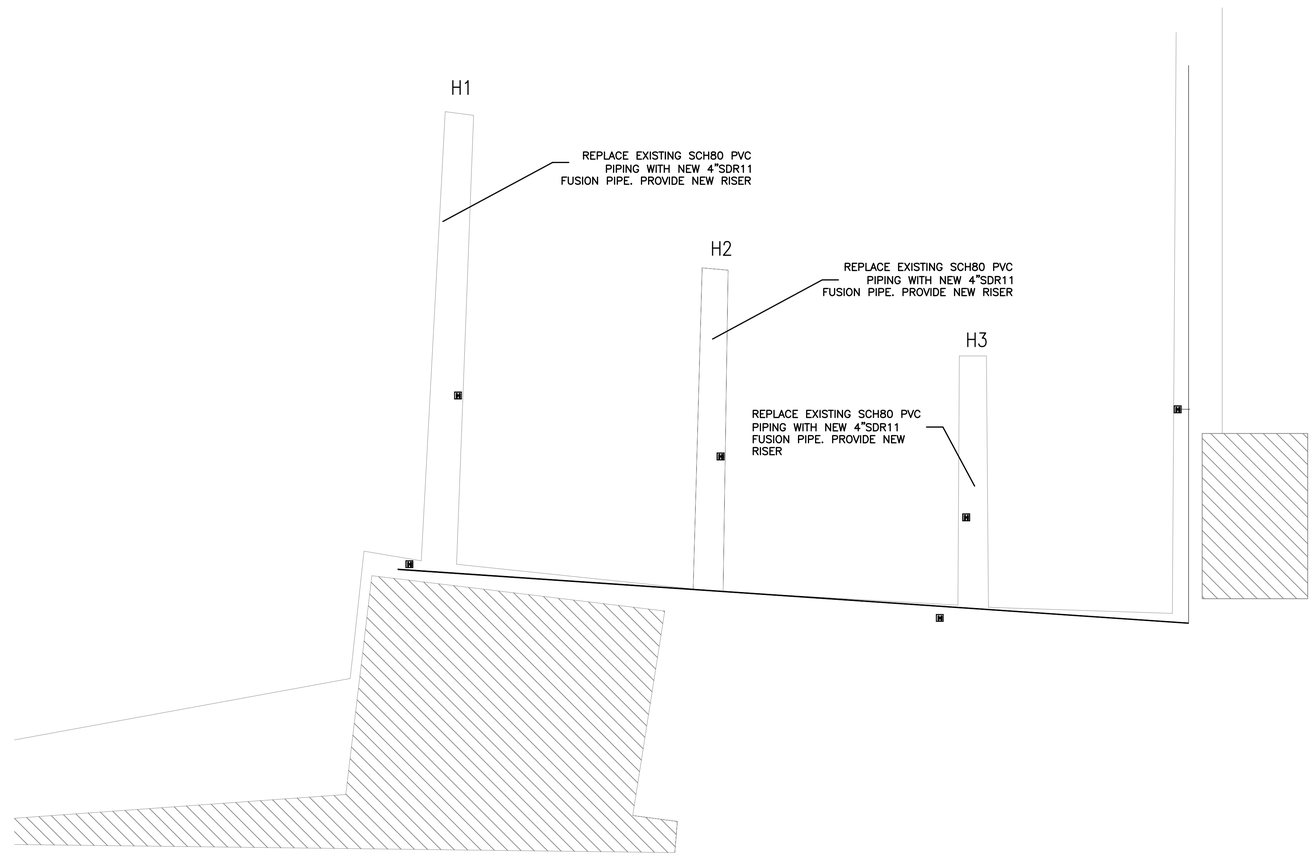

DOCKS "H REPLACE EXISTING 4" SCH 80 PVC
SCALE
N.T.S.

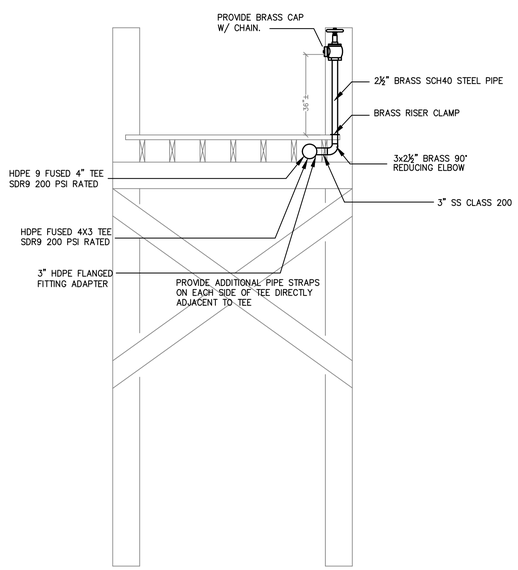

DOCK SECTION
SCALE
N.T.S.

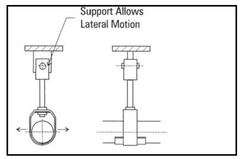

HDPE PIPE HANGER DETAIL WITH STIFFNER
SCALE
N.T.S.

SITE PIPING

PIPING TO BE AS FOLLOWS: HDPE PIPING (DRISCOPLEX OR EQUAL) SHALL BE LISTED FOR THE APPLICATION.

UNDERGROUND SITE PIPING FOR THE STANDPIPE SYSTEM SHALL BE DR 9 HDPE PIPING WHERE SHOWN. HDPE PIPING SHALL BE PROVIDED WITH ANCHORING TO PREVENT FLOTATION IN ACCORDANCE WITH THE MANUFACTURER'S LISTING. RISER PIPING SHALL BE BRASS PIPING.

EXPOSED PIPING UNDER THE DOCK SHALL BE SDR 9 HDPE PIPING. PIPING WHERE CONNECTED TO AN MJ FITTING SHALL BE RESTRAINED TO AVOID THE POISSION EFFECT. RISER SHALL BE BRASS SCH 40.

HDPE PIPING SHALL BE INSTALLED IN ACCORDANCE WITH THE MANUFACTURER'S LISTING AND SHALL ALLOW FOR THERMAL EXPANSION, AND BE RESTRAINED ACCORDINGINGLY

ABOVE GRADE PIPING SUPPORT SHALL CRADEL AT LEAST 120° OF THE PIPE AND BE AT LEAST 1/2 THE PIPE DIAMETER WIDE. EDGES SHALL BE ROUNDED OR ROLLED TO PREVENT CUTTING INTO THE PIPE. HANGER SPACING SHALL NOT EXCEED 6'–0" OR THAT RECOMMENDED BY MANUFACTURER.

STANDPIPE SYSTEM CLASS I

SYSTEM SHALL BE DESIGNED AND INSTALLED IN ACCORDANCE WITH THE FLORIDA FIRE PREVENTION CODE 5TH EDITION (FFPC) CHAPTER 13.2, 13.3, 13.5.1 NFPA 14 2010, NFPA 24 2010 AND CORRESPONDING REFERENCES FOR AN AUTOMATIC WET STANDPIPE SYSTEM.

ALL PIPING USED FOR THE STANDPIPE SYSTEM SHALL BE RATED FOR 200 PSI CONTINUAL WORKING PRESSURE.

EXPOSED PIPING UNDER THE DOCK SHALL BE SDR9 HDPE AND SHALL BE PROTECTED FROM EXPOSURE FIRE IN ACCORDANCE WITH NFPA 303.

ALL HANGERS AND HARDWARE SHALL BE STAINLESS STEEL. ALL PIPE LOOP HANGERS SHALL BE EQUIPPED WITH HDPE PIPE STIFFNERS AND ALLOW FOR LATERAL MOVEMENT AS REQUIRED BY THE MANUFACTURER. (SEE DETAIL)

A CLASS I STANDPIPE SYSTEM SHALL BE PROVIDED WITH 2½" HOSE CONNECTIONS AT LOCATIONS TO BE APPROVED BY LOCAL AHJ.

IDENTIFICATION OF HOSE VALVES SHALL BE IN ACCORDANCE WITH NFPA 14–6.4.5.

HOSE VALVES SHALL BE PRESSURE–REGULATING TYPE TO LIMIT THE RESIDUAL PRESSURE TO 100 PSI. ALL HOSE VALVES SHALL BE FIELD ADJUSTABLE AND SHALL BE ADJUSTED IN THE FIELD. NFPA 14–7.2.3.

FLORIDA FIRE PREVENTION CODE 5TH EDITION

SYSTEM SHALL BE DESIGNED AND INSTALLED IN ACCORDANCE WITH THE FLORIDA FIRE PREVENTION CODE 5TH EDITION (FFPC) CHAPTER 28 AND CORRESPONDING REFERENCES.

28.1.1 CONSTRUCTION OF MULTIPLE DOCKING FACILITIES AT MULTI–FAMILY RESIDENCES SHALL COMPLY WITH NFPA 303.

PORTABLE FIRE EXTINGUISHERS SHALL BE PROVIDED AND INSTALLED IN ACCORDANCE WITH FFPC 28.1.6.1. NFPA 10 2010 AND SHALL BE LISTED FOR CLASS A, B, AND C FIRES. THE DISTANCE FROM ANY POINT ON THE DOCK TO AN EXTINGUISHER SHALL NOT EXCEED 75 FEET. THIS IS NOT UNDER THE SCOPE OF THIS WORK.

INSTALLATION OF FIRE EXTINGUISHERS SHALL BE IN ACCORDANCE WITH NFPA 303 2010 CHAPTER 6. INSTALLING CONTRACTOR SHALL BE FAMILIAR WITH THIS SECTION OF THE CODE. NOT UNDER THE SCOPE OF THIS CONTRACTOR'S WORK.

FIRE STANDPIPE SYSTEM SHALL BE PROVIDED AND INSTALLED IN ACCORDANCE WITH FFPC 28.1.6.3. LOCATION OF ALL HOSE VALVES, EXTINGUISHERS ETC. SHALL BE APPROVED BY THE LOCAL AHJ PRIOR TO INSTALLING.

HYDRANT AND WATER SUPPLIES SHALL BE INSTALLED WITH IN ACCORDANCE WITH FFPC 13.2, 13.3 AND 13.5.1.

LIGHTING IS NOT COVERED UNDER THESE PLANS BUT SHALL BE PROVIDED IN ACCORDANCE WITH FFPC 28.1.7.1.3.

FIRE DEPARTMENT ACCESS SHALL BE PROVIDED IN ACCORDANCE WITH 28.1.7.2.1.8.

PRELIMINARY DESIGN DEVELOPMENT DRAWINGS

FIRE PROTECTION PLAN	
DWN BY:	KAG
SCALE:	1"=20'
DATE:	
DWG:	_B5-FIRE

KEY WEST BIGHT DOCKS

KEY WEST, FLORIDA

GARY'S PLUMBING & FIRE INC
6409 2ND TERRACE WEST SUITE 1
KEY WEST, FLORIDA 33040

KENNETH A GONCI
LICENSE
No. 61685
STATE OF FLORIDA
PROFESSIONAL ENGINEER
K. ANDREW GONCI P.E. 61685

KAD ENGINEERING & CONSULTING, LLC
14934 SKIPJACK LOOP
BRADENTON, FL 34202
PHONE: (941) 545-6407

Sheet Description:
SABAGO & "H" DOCKS STANDPIPE

Copyright 2019 KAD ENGINEERING & CONSULTING

Sheet No.:
FP4