TECHNICAL SPECIFICATIONS
FOR DENNIS STREET
STORMWATER PUMP STATION

CITY OF KEY WEST

PROJECT ID#: 193108

March 2019

TECHNICAL SPECIFICATIONS FOR DENNIS STREET STORMWATER PUMP STATION CITY OF KEY WEST PROJECT ID#: 193108

TAMMY M. MARTIN
LICENSE
No 73892
STATE OF
FLORIDA
PROFESSIONAL ENGINEER

Date: _____

_____

Tammy M. Martin, P.E.

Florida Registered Professional Engineer No. 73892

Specifications: Division 1, 2, 7, 9, 11, 15

Civil and Process Mechanical

SEAL OF THE CITY OF KEY WEST, FLORIDA

March 2019

Black & Veatch
2855 North University Drive, Suite 210
Coral Springs, FL 33065

Certificate of Authorization #8132

TECHNICAL SPECIFICATIONS FOR DENNIS STREET STORMWATER PUMP STATION CITY OF KEY WEST PROJECT ID#: 193108

ELIAS A. POURLADIAN
LICENSE
No 86809
STATE OF
FLORIDA
PROFESSIONAL ENGINEER

Date: _____

_____

Elias Pourladian, P.E.

Florida Registered Professional Engineer No.

Specifications: Divisions 3, 5, 8

Structural

March 2019

Black & Veatch
2855 North University Drive, Suite 210
Coral Springs, FL 33065

Certificate of Authorization #8132

TECHNICAL SPECIFICATIONS FOR DENNIS STREET STORMWATER PUMP STATION CITY OF KEY WEST PROJECT ID#: 193108

LAWRENCE BROUILLETTE
LICENSE
NO.57973
STATE OF
FLORIDA
PROFESSIONAL ENGINEER

Date: _____

_____

Lawrence Brouillette, P.E.

Florida Registered Professional Engineer No. 57973

Specifications: Division 13

Instrumentation & Controls

SEAL OF THE CITY OF KEY WEST, FLORIDA

March 2019

Black & Veatch
2855 North University Drive, Suite 210
Coral Springs, FL 33065

Certificate of Authorization #8132

TECHNICAL SPECIFICATIONS FOR DENNIS STREET STORMWATER PUMP STATION CITY OF KEY WEST PROJECT ID#: 193108

RICHARD D. TAYLOR
LICENSE
No 33376
STATE OF
FLORIDA
PROFESSIONAL ENGINEER

Date: _____

_____

Richard Taylor, P.E.

Florida Registered Professional Engineer No. 33376

Specifications: Division 11 - Section 11910 and Division 16 Electrical

SEAL OF THE CITY OF KEY WEST, FLORIDA

March 2019

Black & Veatch
2855 North University Drive, Suite 210
Coral Springs, FL 33065

Certificate of Authorization #8132

TABLE OF CONTENTS

Subject

SPECIFICATIONS

DIVISION 1 – GENERAL REQUIREMENTS

01015	Project Requirements	1 : 10
01025	Progress Payment Procedures	1 : 5
01070	Abbreviations and Acronyms	1 : 4
01300	Submittals Procedures	1 : 11
01310	Construction Progress Schedule	1 : 8
01320	Construction Progress Documentation	1 : 1
01380	Construction Photographs	1 : 2
01400	Quality Control	1 : 4
01500	Temporary Facilities and Controls	1 : 7
01610	General Equipment Stipulations	1 : 5
01611	Meteorological and Seismic Design Criteria	1 : 3
01612	Product Delivery Requirements	1 : 1
01614	Product Storage and Handling Requirements	1 : 2
01615	Equipment and Valve Identification	1 : 3
01620	Equipment Schedule	1 : 1
01650	Startup Requirements	1 : 15
01700	Closeout Procedures	1 : 5
01739	Equipment Installation	1 : 3
01820	Demonstration and Training	1 : 4

DIVISION 2 – SITEWORK

02050	Demolition	1 : 2
02200	Excavation and Fill for Structures	1 : 15
02202	Trenching and Backfilling	1 : 17
02512	Asphalt Paving	1 : 4

TABLE OF CONTENTS (Continued)

Subject

02522	Concrete Sidewalk, Curb, and Gutter	1 : 4
02605	Sanitary Utility Sewerage Manholes, Frames, and Covers	1 : 7
02606	Manhole and Vault Covers and Accessories	1 : 2
02620	Ductile Iron Pipe	1 : 18
02630	Polyvinyl Chloride (PVC) Pressure Pipe	1 : 5
02704	Pipeline Pressure and Leakage Testing	1 : 4
02725	Stormwater Treatment Devices	1 : 5
02832	Chain Link Fences and Gates	1 : 6

DIVISION 3 – CONCRETE

03100	Concrete Forming	1 : 4
03200	Concrete Reinforcing	1 : 5
03250	Concrete Joints and Accessories	1 : 6
03300	Cast-in-Place Concrete	1 : 23
03351	Concrete Placing	1 : 4
03352	Concrete Finishing	1 : 6
03353	Concrete Curing	1 : 3
03600	Grouting	1 : 2

DIVISION 4 – NOT USED

DIVISION 5 – METALS

05520	Metal Railings	1 : 6
05530	Metal Gratings	1 : 8
05550	Anchorage in Concrete and Masonry	1 : 8
05551	Metal Fabrications	1 : 15
05990	Structural Metals	1 : 11

DIVISION 6 – NOT USED

TABLE OF CONTENTS (Continued)

Subject

DIVISION 7 – THERMAL AND MOISTURE PROTECTION

07160	Dampproofing	1 : 2

DIVISION 8 – DOORS AND WINDOWS

08305	Floor Access Doors and Hatches	1 : 3

DIVISION 9 – FINISHES

09940	Protective Coatings	1 : 21

DIVISION 10 – NOT USED

DIVISION 11 – EQUIPMENT

11150	Submersible Pumps	1 : 11
11185	Submersible Sump and Sewage Pumps	1 : 8
11910	Engine-Generator	1 : 25

DIVISION 12 – NOT USED

DIVISION 13 – SPECIAL CONSTRUCTION

13500	Instrumentation and Control System	1 : 21
13531	Remote Terminal Units	1 : 8
13540	Multiple Address Radio Equipment	1 : 7
13550	Software Control Block Descriptions	1 : 10
13561	Panel Mounted Instruments	1 : 4
13563	Pressure and Level Instruments	1 : 5
13564	Process Analytical Instruments	1 : 4
13566	Miscellaneous Instruments	1 : 3
13570	Panels, Consoles, and Appurtenances	1 : 9

TABLE OF CONTENTS (Continued)

Subject

DIVISION 14 – NOT USED

DIVISION 15 – MECHANICAL

15010	Valve Installation	1 : 3
15093	Check Valves	1 : 4
15102	Eccentric Plug Valves	1 : 6
15108	Air Valves	1 : 2
15180	Valve and Gate Actuators	1 : 7

DIVISION 16 – ELECTRICAL

16050	Electrical	1 : 30
16100	Electrical Equipment Installation	1 : 4
16220	Common Motor Requirements for Process Equipment	1 : 9
16491	Bypass-Isolation Automatic Transfer Switch	1 : 7
16670	Lightning Protection for Structures	1 : 4

FIGURES

1-01300	Submittal Identification & Contractor's Approval Statement	1 : 1
2-01300	Submittal Identification & Contractor's Approval Statement	1 : 1
1-02200	Temporary Excavation Design Certificate	1 : 1
1-02202	Embedments for Conduits	1 : 1
2-02202	Protective System Design Certificate	1 : 1
1-09940	Coating System Data Sheet	1 : 1

TABLE OF CONTENTS (Continued)

Subject		
2-09940	Coating System Data Sheet	1 : 1
1-13500	Instrumentation Device Schedule	1 : 1
1-13530	IO Schedule	1 : 1
2-16050	600 Volt, Single Conductor Lighting/Power Cable	1 : 1
4-16050	600 Volt, Single Pair, Shielded Instrument Cable	1 : 1

Section 01015

PROJECT REQUIREMENTS

1. GENERAL DESCRIPTION OF WORK. The Work of constructing a new stormwater treatment device, submersible pump station, valve vault, discharge piping to connect to existing outfall and associated supporting infrastructure to be performed under these Contract Documents shall consist of furnishing and installation of all tools, equipment, materials, supplies, manufactured articles, transportation and services, including fuel, power, water, and essential communications, for the performance of all labor, work, and/or other operations as required for the fulfillment of the Contract in strict conformance with the Contract Documents. The Work shall be complete, and all work, materials, and services not expressly shown or called for in the Contract Documents which may be necessary for the complete and proper construction of the Work in good faith shall be performed, furnished, and installed by the Contractor as though originally so specified or shown, at no increase in cost to the Owner.

The Work shall be performed on Venetia Street west of the intersection with Dennis Street where the pump station will be installed, and extending along Dennis Street to the south side of the Key West High School where an existing outfall discharges to the salt ponds.

The Work to be performed under these Contract Documents is generally described as follows:

a. Demolition and relocation of one existing manhole.
b. Installation of one new stormwater treatment device.
c. Installation of new submersible pumping station wetwell including two submersible pumps.
d. Installation of valve vault including two plug valves, two check valves, and associated discharge piping.
e. Installation of new generator, generator platform, associated electrical appurtenances and necessary instrumentation and controls.
f. Installation of underground discharge piping from valve vault to existing outfall structure on Key West High School property.
g. Connection of discharge piping to existing outfall structure on Key West High School property.

All work shall be in compliance with all applicable federal, state and local laws and regulations, including those for materials that contain lead. All work shall meet Occupational Safety & Health Administration (OSHA) compliance.

2. UNITS OF MEASUREMENT. Both inch-pound (English) and SI (metric) units of measurement are specified herein; the values expressed in inch-pound units shall govern.

3. OTHER CONSTRUCTION CONTRACTS. Not used.

4. COORDINATION. Contractor shall plan, schedule, and coordinate its operations in a manner which will facilitate the simultaneous progress of the Work.

5. WORK BY PUBLIC UTILITIES. Not used.

6. QUALITY CONTROL. The CONTRACTOR shall develop and maintain a program, acceptable to CITY and ENGINEER, to ensure that all work required under this Contract strictly conforms to all requirements of the Contract Documents. The CONTRACTOR shall be responsible for and shall supervise the work of all subcontractors, providing instructions to each when their work does not conform to the requirements of the Quality Control Program and the Contract Documents.

7. WORK BY OWNER. Not used.

8. PROCUREMENT CONTRACTS. Not used.

9. ITEMS FURNISHED BY OWNER. Not used.

10. RESPONSIBILITY FOR MATERIALS AND EQUIPMENT.

10.01. Items Furnished by Owner. Not used.

10.02. Items Furnished by Contractor. Contractor shall be fully responsible for all materials and equipment which it has furnished.

10.03. Delivery and Handling of Items Furnished by Owner. Not used.

11. OFFSITE STORAGE. Offsite storage arrangements shall be approved by Owner for all materials and equipment not incorporated into the Work but included in Applications for Payment. Such offsite storage arrangements shall be presented in writing and shall afford adequate and satisfactory security and protection. Offsite storage facilities shall be accessible to Owner and Engineer.

12. SUBSTITUTES AND "OR-EQUAL" ITEMS. Provisions for evaluation of proposed "or-equal" items of materials or equipment are covered in Paragraph 7.04 of the General Conditions. Provisions for evaluation of proposed substitute items of materials or equipment are covered in Paragraph 7.05 of the General Conditions. Requests for review of equivalency will not be accepted by Engineer from anyone except Contractor, and such requests will not be considered until after the Effective Date of the Agreement.

Whenever the names of proprietary products or the names of particular manufacturers or vendors are used, it shall be understood that the words "or equal" following the enumeration, if not specifically stated, are implied.

13. PREPARATION FOR SHIPMENT. All materials shall be suitably packaged to facilitate handling and protect against damage during transit and storage. Painted surfaces shall be protected against impact, abrasion, discoloration, and other damage. All painted surfaces which are damaged prior to acceptance of equipment shall be repainted to the satisfaction of Engineer.

Each item, package, or bundle of material shall be tagged or marked as identified in the delivery schedule or on the Shop Drawings. Complete packing lists and bills of material shall be included with each shipment.

14. SALVAGE OF MATERIALS AND EQUIPMENT. Existing materials and equipment removed and not reused as a part of the Work shall become Contractor's property.

Existing materials and equipment removed by Contractor shall not be reused in the Work, except where so specified or indicated.

15. EASEMENTS AND RIGHTS-OF-WAY. The easements and rights-of-way for the work will be provided by Owner. Contractor shall confine its construction operations within the limits indicated on the Drawings. Contractor shall use due care in placing construction tools, equipment, excavated materials, and pipeline materials and supplies in order to avoid damage to property and interference with traffic. Contractor will not use public right-of-way for overnight laydown of materials or equipment.

15.01. On Private Property. Easements across private property are indicated on the Drawings. Contractor shall set stakes to mark the boundaries of construction easements across private property. ***Contractor shall furnish, without charge, competent persons and such tools, stakes, and other materials as Engineer may require in staking out the boundaries of construction easements. Contractor will not be required to provide an instrument person.*** The stakes shall be protected and maintained until completion of construction and cleanup.

Contractor shall not enter any private property outside the designated construction easement boundaries without written permission from the owner of the property.

16. ACCESS TO PROPERTIES. All properties in the area the Work may affect shall have continuos access.

17. NOTICES TO OWNERS AND AUTHORITIES. Contractor shall, as provided in the General Conditions, notify owners of adjacent property and utilities when prosecution of the Work may affect them.

When it is necessary to temporarily deny access to property, or when any utility service connection must be interrupted, Contractor shall give notices sufficiently in advance to enable the affected persons to provide for their needs. Notices shall conform to any applicable local ordinance and, whether delivered orally or in writing, shall include appropriate information concerning the interruption and instructions on how to limit inconvenience caused thereby.

Utilities and other concerned agencies shall be notified at least 24 hours prior to cutting or closing streets or other traffic areas or excavating near underground utilities or pole lines.

Before commencement of Work Contractor will coordinate the planning of all activities that will influence Key West High School activities with representative of the school district for Key West High School.

Doug Pryor
Facilities Planner with Monroe County School District
305-293-1400 ext 53465

18. LINES AND GRADES. Not used.

19. ALLOWANCES. The Contract Price includes allowances for all applicable permits.

20. CONNECTIONS TO EXISTING FACILITIES. Unless otherwise specified or indicated, Contractor shall make all necessary connections to existing facilities, including structures, drain lines, and utilities such as water, sewer, gas, telephone, and electric. In each case, Contractor shall receive permission from Owner or the owning utility prior to undertaking connections. Contractor shall protect facilities against deleterious substances and damage.

Connections to existing facilities which are in service shall be thoroughly planned in advance, and all required equipment, materials, and labor shall be on hand at the time of undertaking the connections. Work shall proceed continuously (around the clock) if necessary to complete connections in the minimum time. Operation of valves or other appurtenances on existing utilities, when required, shall be by or under the direct supervision of the owning utility.

21. TRAFFIC MAINTENANCE. Contractor shall provide traffic maintenance plans where required by federal, state, county, or local agencies having jurisdiction.

Contractor shall comply with all rules and regulations of the state, county, and city authorities regarding closing or restricting the use of public streets or highways. No public or private road shall be closed, except by express permission of the Owner. Conduct the work so as to assure the least possible obstruction to traffic and normal commercial pursuits. Protect all obstructions within traveled roadways by installing approved signs, barricades, and lights where necessary for the safety of the public. The convenience of the general public and residents adjacent to the project, and the protection of persons and property are of prime importance and shall be provided for in an adequate and satisfactory manner.

Where traffic will pass over trenches after they are backfilled and before they are paved, the top of the trench shall be maintained in a condition that will allow normal vehicular traffic to pass over. Temporary access driveways must be provided where required. Cleanup operations shall follow immediately behind backfilling and the worksite shall be kept in an orderly condition at all times.

When flagmen and guards are required by regulation or when deemed necessary for safety, they shall be furnished with approved orange wearing apparel and other regulation traffic-control devices in accordance with FDOT provisions.

Where work is required in Monroe County right-of-way, the Contractor shall obtain a County permit. The Contractor shall provide a MOT completed by a certified engineer with the permit.

21.01 TRAFFIC CONTROL. Traffic control on all city, county and state highway rights-of-way shall meet the requirements of the current edition (including all amendments) of the City of Key West regulations, where applicable, and the Florida Department of Transportation Standard Specifications for Road and Bridge Construction, as well as FDOT standard details for maintenance of traffic, in accordance with the Manual for Uniform Traffic Control and Safe Practices.

The Contractor shall provide at no cost to the Owner a Maintenance of Traffic Plan, including 11- by 17-inch engineered drawings of his intended maintenance of traffic scheme, to the agency having jurisdiction for review and approval. This shall include barrier details, barricade type, and location. Two copies of the agency approved plan with drawings shall be submitted to the Engineer prior to initiation of construction.

22. UNFAVORABLE CONSTRUCTION CONDITIONS. During unfavorable weather, wet ground, or other unsuitable construction conditions, Contractor shall confine its operations to work which will not be affected adversely by such conditions. No portion of the Work shall be constructed under conditions which would affect adversely the quality or efficiency thereof, unless special means or precautions are taken by Contractor to perform the Work in a proper and satisfactory manner.

22.01 HURRICANE AND STORM WARNINGS. The CONTRACTOR shall take all precautions necessary to protect the job site during hurricane and storm watches and warnings.

23. DEMOLITION, CUTTING AND PATCHING. As provided in General Conditions, Contractor shall perform all cutting and patching required for the Work and as may be necessary in connection with uncovering Work for inspection or for the correction of defective Work.

Contractor shall perform all demolition, cutting and patching required for and in connection with the Work, including but not limited to the following:

Removal of existing structures.
Removal of improperly timed Work.
Removal of samples of installed materials for testing.
Installation of new Work in existing structures.

Contractor shall provide all shoring, bracing, supports, and protective devices necessary to safeguard all Work and existing structures during cutting and patching operations. Contractor shall not undertake any cutting or demolition which may affect the structural stability of the Work or existing structures without Engineer's concurrence.

Materials shall be demolished, cut and removed to the extent indicated on the Drawings or as required to complete the Work. Materials shall be removed in a careful manner, with no damage to adjacent structures or materials. ***Materials which are not salvable shall be removed from the site by Contractor.***

All Work and existing structures affected by cutting operations shall be restored with new materials, or with salvaged materials acceptable to Engineer, to obtain a finished installation with the strength, appearance, and functional capacity required. If necessary, entire surfaces shall be patched and refinished.

24. SITE CONDITIONS. The CONTRACTOR acknowledges that it has satisfied itself as to the conditions affecting the Work, including but not restricted to those bearing upon transportation, disposal, handling and storage of materials, availability of labor, water, electric power, roads and uncertainties of weather, river stages, tides, water tables or similar physical conditions at the site, the conformation and conditions of the ground, the character of equipment and facilities needed preliminary to and during execution of the Work. The CONTRACTOR further acknowledges that it has satisfied itself as to the character, quality and quantity of surface and subsurface materials or obstacles to be encountered insofar as this information is reasonably ascertainable from information presented by the Drawings and Specifications made a part of this Contract, or any other information made available to it prior to receipt of Bids. Any

failure by the CONTRACTOR to acquaint itself with the available information will not relieve the CONTRACTOR from responsibility for estimating properly the difficulty or cost of successfully performing the Work. The CITY assumes no responsibility for any conclusions or interpretations made by the CONTRACTOR on the basis of the information made available by the CITY.

25. HAZARDOUS ENVIRONMENTAL CONDITIONS AT SITE. No Hazardous Environmental Conditions at the Site in areas that will be affected by the Work are known to the Owner.

25.01. Abatement of Hazardous Environmental Conditions. ***If Contractor's survey of the Site indicates the presence of Hazardous Environmental Conditions, Contractor shall abate the Hazardous Environmental Conditions under a Change Order to the Contract.*** Before commencement of work that may impact, damage or disturb the Hazardous Environmental Conditions at the Site, Contractor shall engage a qualified Subcontractor to encapsulate, enclose, or remove and dispose of all identified ACM, Metal Bearing Protective Coatings, Paints, and Linings, Contaminated Environmental Media, and/or other Hazardous Substances in accordance with current regulations of the Environmental Protection Agency and the U. S. Department of Labor - Occupational Safety and Health Administration, the applicable state regulating agency, and any local government agency.

25.02. Subcontractor's Qualifications. Subcontractor for removal/abatement of Hazardous Environmental Conditions shall be regularly engaged in this type of activity and shall be familiar with the regulations which govern this work. Subcontractor shall demonstrate to the satisfaction of Owner that it has successfully completed removal/abatement projects of similar nature and extent, that it has the necessary staff and equipment to perform the work, and that it has an approved site for disposal of waste materials. Liability insurance covering the Hazardous Environmental Condition removal/abatement work shall be provided as specified in the Supplementary Conditions.

25.03. Removal/Abatement Methods. The Hazardous Environmental Condition removal/abatement Subcontractor shall visit the site of the Work to determine the equipment required for completion of the work, and shall submit a work plan of its proposed removal/abatement procedure to Owner before beginning work and shall certify that the methods are in full compliance with the governing regulations. The work plan shall cover all aspects of the removal/abatement, including health and safety of construction site and owner employees, hygiene facilities, employee certification, clearance criteria, transportation and disposal, enclosure techniques, and other techniques appropriate for the proposed work.

For abatement of ACM, Contractor shall retain an independent third party air monitoring firm to conduct air monitoring as required to demonstrate the effectiveness of the dust containment system. The air quality testing firm shall

submit a report documenting the results of the air monitoring. The air monitoring firm shall have at least 5 years of experience in air monitoring for ACM removal.

26. CLEANING UP. Contractor shall keep the premises free at all times from accumulations of waste materials and rubbish. Contractor shall provide adequate trash receptacles about the Site and shall promptly empty the containers when filled.

Construction materials, such as concrete forms and scaffolding, shall be neatly stacked by Contractor when not in use. Contractor shall promptly remove splattered concrete, asphalt, oil, paint, corrosive liquids, and cleaning solutions from surfaces to prevent marring or other damage.

Volatile wastes shall be properly stored in covered metal containers and removed daily.

Wastes shall not be buried or burned on the Site or disposed of into storm drains, sanitary sewers, streams, or waterways. All wastes shall be removed from the Site and disposed of in a manner complying with local ordinances and antipollution laws.

Adequate cleanup will be a condition for recommendation of progress payment applications.

27. APPLICABLE CODES. References in the Contract Documents to local codes mean the following:

a. 2017 Florida Building Code
b. Applicable local ordinances for Key West.

Other standard codes which apply to the Work are designated in the Specifications.

28. REFERENCE STANDARDS. Reference to standards, specifications, manuals, or codes of any technical society, organization, or association, or to the laws or regulations of any governmental authority, whether such reference be specific or by implication, shall mean the latest standard specification, manual, code, or laws or regulations in effect at the time of opening of Bids (or on the effective date of the Contract or Agreement if there were no Bids), except as may be otherwise specifically stated in the Contract Documents. However, no provision of any referenced standard, specification, manual, or code, or any instruction of a Supplier, shall be effective to change the duties or responsibilities of Owner, Contractor, or Engineer, or any of their subcontractors, consultants, agents, or employees from those set forth in the Contract Documents, nor shall any such provision or instruction be effective to assign to Owner, Engineer, or any of Engineer's Consultants, agents, or employees, any duty or authority to supervise

or direct the performance of the Work or any duty or authority to undertake responsibility inconsistent with the provisions of the Contract Documents.

29. ALTERNATES. Not used.

30. PRECONSTRUCTION CONFERENCE. Prior to the commencement of Work at the Site, a preconstruction conference will be held at a mutually agreed time and place. The conference shall be attended by:

a. Contractor and its superintendent.
b. Principal Subcontractors.
c. Representatives of principal Suppliers and manufacturers as appropriate.
d. Engineer and its Resident Project Representative.
e. Representatives of Owner.
f. Government representatives as appropriate.
g. Others as requested by Contractor, Owner, or Engineer.

Unless previously submitted to Engineer, Contractor shall bring to the conference a preliminary schedule for each of the following:

a. Progress Schedule.
b. Procurement schedule.
c. Schedule of Values for progress payment purposes.
d. Schedule of Shop Drawings and other submittals.

The purpose of the conference is to designate responsible personnel and establish a working relationship. Matters requiring coordination will be discussed and procedures for handling such matters established. The agenda will include:

a. Contractor's preliminary schedules.
b. Transmittal, review, and distribution of Contractor's submittals.
c. Processing Applications for Payment.
d. Maintaining record documents.
e. Critical Work sequencing.
f. Field decisions and Change Orders.
g. Use of premises, office and storage areas, security, housekeeping, and Owner's needs.
h. Major equipment deliveries and priorities.
i. Contractor's assignments for safety and first aid.

Engineer will preside at the conference and will arrange for keeping the minutes and distributing the minutes to all persons in attendance.

31. PROGRESS MEETINGS. Contractor shall schedule and hold regular progress meetings at least monthly and at other times as requested

by Engineer or required by progress of the Work. Contractor, Engineer, and all Subcontractors active on the Site shall be represented at each meeting. Contractor may at its discretion request attendance by representatives of its Suppliers, manufacturers, and other Subcontractors.

Contractor shall preside at the meetings. Meeting minutes shall be prepared and distributed by Contractor. The purpose of the meetings will be to review the progress of the Work, maintain coordination of efforts, discuss changes in scheduling, and resolve other problems which may develop.

32. SITE ADMINISTRATION. Contractor shall be responsible for all areas of the Site used by it, and by all Subcontractors in the performance of the Work. Contractor shall exert full control over the actions of all employees and other persons with respect to the use and preservation of property and existing facilities, except such controls as may be specifically reserved to Owner or others. Contractor shall have the right to exclude from the Site all persons who have no purpose related to the Work or its inspection, and may require all persons on the Site (except Owner's employees) to observe the same regulations as Contractor requires of its employees.

33. USE OF PREMISES. Contractor shall limit site disturbance within the area identified on the Drawings.

34. NONSMOKING BUILDING. Not used.

End of Section

Section 01025

PROGRESS PAYMENT PROCEDURES

1. SCOPE. This section covers methods of measurement and payment for items of Work under this Contract.

2. GENERAL. The Contract Price for each section of the Contract shall cover all Work required by the Contract Documents. All costs in connection with the proper and successful completion of the Work, including furnishing all materials, equipment, supplies, and appurtenances; providing all construction plant, equipment, and tools; and performing all necessary labor and supervision to fully complete the Work, shall be included in the unit and lump sum prices bid. All Work not specifically set forth as a pay item in the Bid Form shall be considered a subsidiary obligation of Contractor and all costs in connection therewith shall be included in the prices bid.

3. ESTIMATED QUANTITIES. All estimated quantities stipulated in the Bid Form or other Contract Documents are approximate and are to be used only (a) as a basis for estimating the probable cost of the Work and (b) for the purpose of comparing the Bids submitted for the Work. The actual amounts of work done and materials furnished under unit price items may differ from the estimated quantities. The basis of payment for work and materials will be the actual amount of work done and materials furnished. Contractor agrees that it will make no claim for damages, anticipated profits, or otherwise on account of any difference between the amounts of work actually performed and materials actually furnished and the estimated amounts therefor.

4. EXCAVATION AND TRENCHING. Except where otherwise specified, the unit or lump sum price bid for each item of Work which involves excavation or trenching shall include all costs for such Work. No separate payment shall be made for excavation or trenching. All trenching shall be unclassified as to materials which may be encountered, and trenches shall be unclassified as to depth. All excavation work required for structures shall be unclassified as to materials which may be encountered; such excavation work shall be considered to be a subsidiary obligation of Contractor and the cost of such excavation shall be included in the prices bid for the structures.

4.01. Structure Excavation. All excavation work required for structures, not otherwise paid for as trenching, shall be considered to be a subsidiary obligation of Contractor and the cost of such excavation shall be included in the prices bid for the structures.

4.02. Resodding. No separate payment shall be made in connection with resodding as specified or required. All costs in connection with resodding shall be included in the cost of trenching.

5. PIPELINES. Ductile iron pipelines which are to be paid for on a unit price basis shall be measured for payment on a horizontal plane after installation of the pipe. Where lines are laid to conform to stationed profiles, payment shall be made on linear quantities based on the pipeline stationing as determined by surveys made after installation.

The measurement of the length of each line or run of pipe of each size will begin and end at:

a. The end of the pipe where connected to an existing pipe, fitting, or valve; or at the end of a dead-end run.

b. The center line intersection of run and branch on tees, crosses, or laterals where a branch line connecting therewith is constructed under this Contract. Where a branch fitting is installed under this Contract, and the branch or connecting line is to be constructed by others at some future date or under another contract, the pay measurement will include the entire laying length of the branch or branches of such fitting.

c. The measurement of each line of pipe of each size which is to be paid for on a unit price basis will be continuous through, and shall include the full laying lengths of, all fittings and valves installed between the ends of each line; except that the laying lengths of reducers and increasers will be divided equally between the connected pipe sizes. Connected piping for fire hydrants will be measured for payment from the center of the main to the center of the auxiliary gate valve.

5.01. Connections to Existing Water Mains. Not used.

5.02. Sectionalizing Valves. Not used.

6. SEWERS. Sewers will be measured for payment on a horizontal plane after installation, through all line manholes, to the centers of new manholes, and through the walls of structures and existing manholes at the points of connection therewith.

The unit price bid for pipe of each designated kind and size shall cover all installation and shall include all trenching and backfill, pipe, fittings, jointing materials, pipe laying, pipe embedment including furnishing embedment materials, and all bell hole excavation.

6.01. Tee-Branches and Other Fittings. The unit price bid for tee-branches and other fittings shall be the additional cost of such tee-branch or other fitting over

and above that of an equivalent length of sewer pipe. The unit price for tee-branches shall include furnishing and installing a suitable plug or connecting a sewer, providing a location marker, and all other costs.

6.02. Standard Manholes. Payment for standard manholes shall be as follows:

a. A unit price to cover the construction of one standard manhole 6 feet deep measured from the elevation of the invert of the sewer at the center of the manhole to the top of the manhole cover. This price shall include the manhole foundation manhole invert construction walls top section and manhole frame and cover and necessary ladder steps for a manhole 6 feet deep.

b. A unit price which shall cover the entire cost of each additional foot of vertical manhole depth in excess of 6 feet including the prorated cost of ladder steps.

6.03. Standard Drop Manholes. Payment for standard drop manholes shall be as specified for standard manholes, except that the unit prices shall also cover the cost of construction of drop assembly, complete with drop pipe, fittings, concrete encasement, and all other appurtenant work.

6.04. Special Manholes and Structures. Special manholes and structures shall be paid for at the lump sum prices bid. The lump sum prices shall include all excavation and backfilling not paid for as trenching for sewer pipe, concrete, reinforcing steel, grating, and all other work required to complete the manholes and structures as indicated on the drawings and specified.

6.05. Connections to Existing Manholes. Connections to existing manholes shall be paid for separately at the lump sum prices bid. Such payment shall be full compensation for necessary cutting, shaping, plugging, reshaping of existing invert, diversion of flow, completing the connection as required, and excavation work not otherwise paid for as trenching.

7. PIPELINES. Pipelines which are to be paid for on a unit price basis shall be measured for payment, after installation, on the basis of the pipeline stationing as determined by the pipeline installation surveys, with all stations carefully measured.

The measurement of the length of each line or run of pipe of each size shall begin and end at:

a. The end of the pipe, where not connected to any other pipe, fitting, or special under this Contract.

b. The point of connection to any pipe or fitting installed under another contract for this Project.

c. The point of connection with the item limit of any lump sum bid item which includes the pipe.

d. The center line intersection of runs and branches of tees, crosses, and Y-branches not included in lump sum items, where branch or connecting lines are constructed under this Contract.

e. The measurement of each line or run of pipe of each size which is to be paid for on a unit price basis shall be made continuous through all valves, fittings, and specials installed between the ends of each such line; except that the laying lengths of reducers and increasers shall be divided equally between the connected pipe sizes.

7.01. Concrete Filled Tunnels. Not used.

7.02. Crossings. Not used.

7.03. Pavement Removal and Replacement. Pavement removal and replacement shall be measured for payment horizontally along the center line of the pipe, through manholes, and to the edge of the existing pavement; or, where the edge of the existing pavement is not clearly defined, to the edge of the pavement replacement. The width of pavement replacement will not be measured or taken into account in payment.

The unit prices bid for pavement removal and replacement shall include all costs in connection therewith, including cutting, removal, and disposal of old pavement; construction of new pavement; and all extra compaction effort required for backfill beneath pavement.

7.04. Sidewalk Removal and Replacement. The unit prices per square yard [square meter] bid for sidewalk removal and replacement shall include all costs involved in cutting and removing sidewalks, and all labor and materials required to replace the sidewalks.

Measurement for payment for sidewalk removal and replacement shall be on a square yard basis and shall include only the area actually removed and replaced, between joints, over the pipeline trench.

All costs involved in repairing or removal and replacement of existing sidewalks outside the specified pay limits, where damaged during the construction operations, shall be considered a subsidiary obligation of Contractor and shall be borne by Contractor.

8. MISCELLANEOUS CONCRETE. Concrete for encasement or blocking of pipe and fittings not included as parts of manholes and other structures will be measured for payment as the actual volume of concrete placed within the limits as indicated or specified.

Concrete for arch encasement of pipe shall be computed using the dimensions shown for arch encasement on Figure 1-02202, "Embedments for Conduits".

Concrete for total encasement shall be computed using the maximum allowable trench width (or pipe OD plus 24 inches where no maximum is specified), the minimum clear depth below the pipe, and the minimum cover over the pipe, less the volume occupied by the pipe itself.

Concrete for reaction blocking, except blocking behind and under fire hydrants, shall be computed using the dimensions indicated on the drawings for such blocking, unless otherwise authorized by Engineer. Direct payment shall not be made for blocking behind and under fire hydrants.

Unless otherwise authorized by Engineer, all additional concrete for encasement or blocking required outside the specified pay limits will be considered a subsidiary obligation of Contractor and no direct payment shall be made therefor.

All concrete which is required in connection with manholes or structures, pavement or sidewalk replacement, and other pay items shall be included in the lump sum or unit price bid for the pay item.

The unit price bid for miscellaneous concrete shall include concrete, reinforcing steel, forms, finishing, curing, and all other work or materials required to complete the concrete work.

9. PACKAGE PUMPING STATION. Not used.

End of Section

Section 01070

ABBREVIATIONS AND ACRONYMS

1. LIST OF ABBREVIATIONS. Abbreviations for standards and organizations used in the Contract Documents are defined as follows:

AA	Aluminum Association
AABC	Associated Air Balance Council
AAMA	Architectural Aluminum Manufacturers Association
AASHTO	American Association of State Highway and Transportation Officials
ABMA	American Bearing Manufacturers Association
ACI	American Concrete Institute
ACPA	American Concrete Pipe Association
AEIC	Association of Edison Illuminating Companies
AFBMA	Antifriction Bearing Manufacturers Association now recognized as the ABMA
AFPA	American Forest & Paper Association
AGA	American Gas Association
AGMA	American Gear Manufacturers Association
AHA	American Hardboard Association
AHRI	Air-Conditioning, Heating and Refrigeration Institute
AISC	American Institute of Steel Construction
AISI	American Iron and Steel Institute
AITC	American Institute of Timber Construction
AMCA	Air Movement and Control Association International
ANSI	American National Standards Institute
APA	Engineered Wood Association (formerly American Plywood Association)
API	American Petroleum Institute
AREMA	American Railway Engineers and Maintenance-of-Way Association
ASAHC	American Society of Architectural Hardware Consultants
ASCE	American Society of Civil Engineers
ASHRAE	American Society of Heating, Refrigerating, and Air-Conditioning Engineers
ASME	American Society of Mechanical Engineers
ASSE	American Society of Sanitary Engineers
ASTM	ASTM International
AWG	American Wire Gauge
AWI	Architectural Woodwork Institute
AWPA	American Wood-Preservers' Association
AWS	American Welding Society
AWWA	American Water Works Association

BHMA	Builders Hardware Manufacturers Association
BIA	Brick Institute of America (formerly SCPI)
CDA	Copper Development Association
CISPI	Cast Iron Soil Pipe Institute
CMAA	Crane Manufacturers Association of America
CRA	California Redwood Association
CRSI	Concrete Reinforcing Steel Institute
CS	Commercial Standard (U.S. Department of Commerce)
DHI	Door and Hardware Institute
DIPRA	Ductile Iron Pipe Research Association
EEI	Edison Electric Institute
EJCDC	Engineers' Joint Contract Documents Committee
EPA	Environmental Protection Agency
FCC	Federal Communications Commission
FCI	Fluid Controls Institute
Fed Spec	Federal Specification
FGMA	Flat Glass Marketing Association
FHWA	Federal Highway Administration
FIA	Factory Insurance Association
FM	Factory Mutual
FSA	Fluid Sealing Association
HEI	Heat Exchange Institute
HMI	Hoist Manufacturers Institute
HPMA	Hardwood Plywood Manufacturers Association
HTI	Hand Tools Institute
I-B-R	Institute of Boiler and Radiator Manufacturers
IEEE	Institute of Electrical and Electronics Engineers
IBC	International Building Code
IES	Illuminating Engineering Society
IFI	Industrial Fasteners Institute
IPCEA	Insulated Power Cable Engineers Association
IRI	Industrial Risk Insurers
ISA	International Society of Automation
LEED	Leadership in Energy and Environmental Design
MHI	Materials Handling Institute
MIL	Military Specification

MMA	Monorail Manufacturers Association
MSS	Manufacturers Standardization Society of Valve and Fitting Industry
NAAMM	National Association of Architectural Metals Manufacturers
NACE	NACE International
NBBPVI	National Board of Boiler and Pressure Vessel Inspectors
NBS	See NIST
NCSPA	National Corrugated Steel Pipe Association
NEBB	National Environmental Balancing Bureau
NEC	National Electrical Code
NECA	National Electrical Contractors Association
NEII	National Elevator Industry, Inc.
NEMA	National Electrical Manufacturers Association
NFPA	National Fire Protection Association
NIST	National Institute of Standards and Technology (formerly NBS)
NLA	National Lime Association
NPC	National Plumbing Code
NPT	National Pipe Thread
NRMCA	National Ready Mixed Concrete Association
NSC	National Safety Council
NSF	NSF International (formerly National Sanitation Foundation)
NTMA	National Terrazzo and Mosaic Association
NWMA	National Woodwork Manufacturers Association
OSHA	Occupational Safety and Health Administration
PCA	Portland Cement Association
PCI	Precast/Prestressed Concrete Institute
PS	Product Standard
RIS	Redwood Inspection Service
SAE	SAE International
SDI	Steel Door Institute
SFPA	Southern Forest Products Association
SI	Systéme International des Unités (International System of Units)
SIGMA	Sealed Insulating Glass Manufacturers Association
SJI	Steel Joist Institute
SMA	Screen Manufacturers Association
SMACNA	Sheet Metal and Air Conditioning Contractors National Association

SPFA	Steel Plate Fabricators Association
SPI	Society of the Plastics Industry
SPTA	Southern Pressure Treaters Association
SSFI	Scaffolding, Shoring & Forming Institute, Inc
SSPC	SSPC: The Society for Protective Coatings
TABB	Testing, Adjusting, and Balancing Bureau
UL	Underwriters' Laboratories
USBR	U.S. Bureau of Reclamation
USGBC	U.S. Green Building Council
WEF	Water Environment Federation

End of Section

Section 01300

SUBMITTAL PROCEDURES

1. SHOP DRAWINGS AND ENGINEERING DATA.

1.01. General. Shop Drawings and engineering data (submittals) covering all equipment and all fabricated components and building materials which will become a permanent part of the Work under this Contract shall be submitted to Engineer for review, as required. Submittals shall verify compliance with the Contract Documents, and shall include drawings and descriptive information in sufficient detail to show the kind, size, arrangement, and the operation of component materials and devices; the external connections, anchorages, and supports required; the performance characteristics; and dimensions needed for installation and correlation with other materials and equipment.
Each submittal shall cover items from only one section of the specification unless the item consists of components from several sources. Contractor shall submit a complete initial submittal including all components. When an item consists of components from several sources, Contractor's initial submittal shall be complete including all components.

All submittals, regardless of origin, shall be approved by Contractor and clearly identified with the name and number of this Contract, Contractor's name, and references to applicable specification paragraphs and Contract Drawings. Each copy of all submittals, regardless of origin, shall be stamped or affixed with an approval statement of Contractor. Each submittal shall indicate the intended use of the item in the Work. When catalog pages are submitted, applicable items shall be clearly identified and inapplicable data crossed out. The current revision, issue number, and date shall be indicated on all drawings and other descriptive data.

Contractor shall be solely responsible for the completeness of each submittal. Contractor's stamp or affixed approval statement of a submittal, per Figure 1-01300, is a representation to Owner, and Engineer that Contractor accepts sole responsibility for determining and verifying all field measurements, quantities, dimensions, specified performance and design criteria, installation requirements, materials, catalog numbers, and similar information with respect thereto, and that Contractor has reviewed and coordinated each submittal with other Shop Drawings and with the requirements of the Work and the Contract Documents.

All deviations from the requirements of the Contract Documents shall be identified as deviations on each submittal and shall be tabulated in Contractor's letter of transmittal using Figure 2-01300. Such submittals shall, as pertinent to the deviation, indicate essential details of all changes proposed by Contractor (including modifications to other facilities that may be a result of the deviation) and all required piping and wiring diagrams.

Shop drawings shall show the principal dimensions, weight, structural and operating features, space required, clearances, type and/or brand of finish or shop coat, grease fittings, etc., depending on the subject of the Drawings.

When so specified, or if considered by the Engineer to be acceptable, the manufacturer's specifications, catalog data, descriptive matter, illustrations, etc. may be submitted for review in place of shop drawings. In such case, the requirements shall be as specified for shop drawings, insofar as applicable.

Contractor shall submit shop drawings electronically. Drawings and the necessary data shall be submitted electronically to Engineer as specified below. Submittal documents shall be in color to facilitate use of red line markups. All electronic files shall be in Portable Document Format (PDF). The PDF file(s) shall be fully indexed using the Table of Contents, searchable with thumbnails generated. PDF images must be at a readable resolution. For most documents, they should be scanned or generated at 300 dots per inch (dpi). Use of higher resolution is acceptable with Owner and Engineer approval. Optical Character Recognition (OCR) capture must be performed on these images so that text can be searched, selected and copied from the generated PDF file. The PDF documents shall have a bookmark created in the navigation frame for each major entry (“Section” or “Chapter”) in the Table of Contents. Thumbnails shall be generated for each page or graphic in the PDF file.

1.02. Requirements: All shop drawings shall be submitted to the Engineer through the Contractor. The Contractor is responsible for obtaining shop drawings from its subcontractors and returning reviewed Drawings to them. All shop drawings shall be prepared on standard size, 24-inch by 36-inch sheets. All Drawings shall be clearly marked with the name of the project, Owner, Contractor, and building, equipment, or structure to which the drawing applies. Drawings shall be suitably numbered and stamped by the Contractor. Each submittal shall include a letter of transmittal giving a list of the items included in the submittal.

1.03. Product Data: Where manufacturer's publications in the form of catalogs, brochures, illustrations, or other data sheets are submitted in lieu of prepared shop drawings, such submission shall specifically indicate the particular item offered. Identification of such items and relative pertinent information shall be made with indelible ink. Submissions showing only general information will not be accepted

Product data shall include materials of construction, dimensions, performance characteristics, capacities, wiring diagrams, piping and controls, etc.

1.04. Warranties: When warranties are called for, a sample of the warranty shall be submitted with the shop drawings. The sample warranty shall be the same form that will be used for the actual warranty. Actual warranties shall be originals and notarized.

1.05. Work Prior to Review: No material or equipment shall be purchased, fabricated especially for this Contract, or delivered to the project site until the required shop drawings have been submitted, processed and marked either "FURNISH AS SUBMITTED" or "FURNISH AS CORRECTED". All materials and Work involved in the construction shall be as represented by said Drawings.

The Contractor shall not proceed with any portion of the Work (such as the construction of foundations) for which the design and details are dependent upon the design and details of equipment for which submittal review has not been completed.

1.06. Substitutions: Whenever a particular brand or make of material, equipment, or other item is specified, or is indicated on the Drawings, it is for the purpose of establishing a standard of quality, design, and type desired and to supplement the detailed specifications. Any other brand or make which is equivalent to that specified or indicated may be offered as a substitute subject to the following provisions:

a. The Contractor shall submit for each proposed substitution sufficient details, complete descriptive literature, and performance data together with samples of the materials, where feasible, to enable the Engineer to determine if the proposed substitution is equal, in all respects including, but not limited to, quality, performance, ease of maintenance, availability of spare parts, and experience record.

b. The Contractor shall submit certified tests, where applicable, by an independent laboratory attesting that the proposed substitution is equal.

c. A list of installations where the proposed substitution is equal. Such listing shall cover a minimum of the previous five years and will furnish project names and contact phone numbers.

d. Where the acceptance of a substitution requires redesign of any part of the Work, all such additional redesign and all new Drawings and details required therefore shall be at the Contractor’s expense.

e. In all cases the Engineer shall be the sole judge as to whether a proposed substitution is to be accepted. The Contractor shall abide by the Engineer's decision when proposed substitute items are judged to be unacceptable and shall in such instances furnish the item as specified. No substitute items shall be used in the Work without written acceptance of the Engineer.

f. Any substitution submitted by Contractor must meet the form, fit, function and life cycle criteria of the item proposed to be replaced and there must be a net dollar savings including Engineer review fees and charges.

g. Acceptance of any proposed substitution shall in no way release the Contractor from any of the provisions of the Contract Documents. Acceptance shall not result in any increase in the Contract Price or Contract time.

h. Owner may require, at Contractor's expense, a special performance guarantee or other surety with respect to any substitute.

1.07. Complete Submittals: Each submittal shall be complete in all aspects incorporating all information and data required to evaluate the products' compliance with the Contract Documents. Partial or incomplete submissions shall be returned to the Contractor without review.

1.08. Engineer's Review of Submittals. Engineer's review of submittals covers only general conformity to the Drawings and Specifications, external connections, and dimensions that affect the layout; it does not indicate thorough review of all dimensions, quantities, and details of the material, equipment, device, or item covered. Engineer's review shall not relieve Contractor of sole responsibility for errors, omissions, or deviations in the drawings and data, nor of Contractor's sole responsibility for compliance with the Contract Documents.

Engineer's submittal review period shall be 15 consecutive calendar days and shall commence on the first calendar day following receipt of the submittal or resubmittal in Engineer's office.

When the drawings and data are returned with review status "NOT ACCEPTABLE" or "RETURNED FOR CORRECTION," the Contractor is required to resubmit the drawings and data in their entirety plus additional or corrected data specifically requested by the Engineer and responses to Engineer’s review comments.

When the drawings and data are returned with the review status “EXCEPTIONS NOTED, RESUBMITTAL REQUIRED”, the corrections shall be made as instructed by Engineer. The select corrected drawings and data as indicated by the Engineer shall be resubmitted, along with written responses to Engineer’s review comments. The Contractor is not required to resubmit the drawings and data in their entirety.

When the drawings and data are returned with review status "EXCEPTIONS NOTED", "NO EXCEPTIONS NOTED", or "RECORD COPY", no additional copies need be furnished unless specifically requested by Engineer.

1.09. Resubmittal of Shop Drawings and Data. Contractor shall accept full responsibility for the completeness of each resubmittal. Contractor shall verify that all corrected data and additional information previously requested by Engineer are provided on the resubmittal. Resubmittals shall be in an organized and consistent format.

When corrected copies are resubmitted, Contractor shall direct specific attention to all revisions in writing and shall list separately any revisions made other than those called for by Engineer on previous submittals. Requirements specified for initial submittals shall also apply to resubmittals. Resubmittals shall bear the number of the first submittal followed by a letter (A, B, etc.) or a unique identification that indicates the initial submittal and correct sequence of each resubmittal.

If more than one resubmittal is required because of failure of Contractor to provide all previously requested corrected data or additional information, Contractor shall reimburse Owner for the charges of Engineer for review of the additional resubmittals. This does not include initial submittal data such as shop tests and field tests that are submitted after initial submittal.

Resubmittals shall be made within 30 days of the date of the letter returning the material to be modified or corrected, unless within 14 days Contractor submits an acceptable request for an extension of the stipulated time period, listing the reasons the resubmittal cannot be completed within that time.

The need for more than one resubmittal, or any other delay in obtaining Engineer's review of submittals, will not entitle Contractor to extension of the Contract Times unless delay of the Work is the direct result of a change in the Work authorized by a Change Order or failure of Engineer to review and return any submittal to Contractor within the specified review period.

1.10. Product Samples. Contractor shall furnish for review all product samples as required by the Contract Documents or requested by the Engineer to determine compliance with the specifications.

Samples shall be of sufficient size or quantity to clearly illustrate the quality, type, range of color, finish or texture and shall be properly labeled to show complete project identification, the nature of the material, trade name of manufacturer and location of the Work where the material represented by the sample will be used.

Samples shall be checked by the Contractor for conformance to the Contract Documents before being submitted to the Engineer and shall bear the Contractor's stamp certifying that they have been so checked. Transportation charges on samples submitted to the Engineer shall be prepaid by the Contractor.

Engineer's review will be for compliance with the Contract Documents, and its comments will be transmitted to the Contractor by regular mail, posted no later than 15 days after receipt.

Acceptable samples will establish the standards by which the completed Work will be judged.

1.11. Color Selection. Contractor shall submit samples of colors and finishes for all accepted products before Engineer will coordinate the selection of colors and finishes with Owner. Engineer will prepare a schedule of finishes that includes the colors and finishes selected for both manufactured products and for surfaces to be field painted or finished and will furnish this schedule to Contractor within 60 days after the date of acceptance of the last color or finish sample.

1.13. Record Drawings. The Contractor shall keep and maintain, at the job site, one record set of Drawings. On these, it shall mark all project conditions, locations, configurations, and any other changes or deviations which may vary from the details represented on the original Contract Drawings, including buried or concealed construction and utility features which are revealed during the course of construction. Special attention shall be given to recording the horizontal and vertical location of all buried utilities that differ from the locations indicated, or which were not indicated on the Drawings. Said record drawings shall be supplemented by detailed sketches as necessary or directed to indicate, fully, the Work as actually constructed. These master record drawings of the Contractor's representation of as- built conditions, including all revisions made necessary by addenda and change orders shall be maintained up-to-date during the progress of the Work.

At a minimum the record drawings shall be reviewed on the 20th working day of every third month after the month in which the final Notice-to-Proceed is given as well as on completion of Work. Failure to maintain the record drawings up-to-date shall be grounds of withholding monthly progress payments until such time as the record drawings are brought up-to-date.

Record drawings shall be accessible to the Engineer at all times during the construction period.

Final payment will not be acted upon until the Contractor-prepared record drawings have been delivered to the Engineer. Said up-to-date record drawings shall be in the form of a set of prints with carefully plotted information overlaid in pencil.

Upon substantial completion of the Work and prior to final acceptance, the Contractor shall finalize and deliver a complete set of record drawings to the Engineer for transmittal to the Owner, conforming to the construction records of the Contractor. This set of drawings shall consist of corrected drawings showing the reported location of the Work. The information submitted by the Contractor and incorporated in the Record Drawings will be assumed to be correct, and the Engineer will not be responsible for the accuracy of such information, and for any errors or omissions which may appear on the Record Drawings as a result.

2. OPERATION AND MAINTENANCE DATA AND MANUALS.

2.01. Preliminary Operation and Maintenance Manuals. Preliminary electronic copies of each operation and maintenance (O&M) manual shall be submitted to the Engineer prior to the date of shipment of the equipment, but only after shop drawings for the same equipment have been accepted by the Engineer.

Each preliminary O&M manual shall cover items from only one section of the specification unless the item consists of components from several sources.

The Contractor shall submit preliminary O&M manuals to Engineer in electronic copy. Submittals made by any other method shall not be acceptable. Engineer will not accept preliminary O&M manuals from anyone but Contractor. Preliminary O&M manuals shall be consecutively numbered in direct sequence of submittal and without division by subcontracts or trades.

Engineer's preliminary O&M manual review period shall be 15 consecutive calendar days and shall commence on the first calendar day following receipt of the preliminary O&M manual in Engineer's office.

When the O&M manuals are returned with the review status "RETURNED FOR CORRECTION", the corrections shall be made as instructed by the Engineer and the O&M manuals resubmitted as follows.

2.02. Corrected Operation and Maintenance Manuals. Corrected copies of each operation and maintenance (O&M) manual with corrections and additions made as instructed by the Engineer in the preliminary O&M manual review period shall be submitted to the Engineer not later than 30 days after placing the equipment in operation.

The Contractor shall submit corrected O&M manuals to Engineer in electronic copy according to the methods described in Paragraph 1.02. Submittals made by any other method shall not be acceptable. Engineer will not accept preliminary O&M manuals from anyone but Contractor. Preliminary O&M manuals shall be consecutively numbered in direct sequence of submittal and without division by subcontracts or trades.

All material shall be marked with project identification, and inapplicable information shall be marked out or deleted.

Engineer's review period for the corrected O&M manual shall be 28 consecutive calendar days and shall commence on the first calendar day following receipt of the submittal or resubmittal in Engineer's office.

When the O&M manuals are returned with review status "NOT ACCEPTABLE" or "RETURNED FOR CORRECTION", the Contractor is required to resubmit the O&M manuals in their entirety plus additional or corrected data specifically

requested by the Engineer and written responses to Engineer's review comments.

When the O&M manuals are returned with the review status "EXCEPTIONS NOTED, RESUBMITTAL REQUIRED", the corrections shall be made as instructed by Engineer. The select corrected drawings and data as indicated by the Engineer shall be submitted, along with written responses to Engineer's review comments. The Contractor is not required to resubmit the drawings and data in their entirety.

When the O&M manuals are returned with review status "EXCEPTIONS NOTED", "NO EXCEPTIONS NOTED", or "RECORD COPY", no additional copies need be furnished unless specifically requested by Engineer.

Shipment of equipment will not be considered complete until all required manuals and data have been received.

Parts lists and operating and maintenance instructions shall be furnished for other equipment not listed in the individual equipment sections or the equipment schedule.

Operation and maintenance manuals shall include the following:

a. Equipment function, normal operating characteristics, and limiting conditions.
b. Assembly, installation, alignment, adjustment, and checking instructions.
c. Operating instructions for startup, routine and normal operation, regulation and control, shutdown, and emergency conditions.
d. Lubrication and maintenance instructions.
e. Guide to troubleshooting.
f. Parts lists and predicted life of parts subject to wear.
g. Outline, cross section, and assembly drawings; engineering data; and wiring diagrams.
h. Test data and performance curves, where applicable.

The operation and maintenance manuals shall be in addition to any instructions or parts lists packed with or attached to the equipment when delivered, or which may be required by Contractor.

After review by Engineer is complete three hard copies and one electronic copy of each operation and maintenance manual shall be prepared and delivered to Owner not later than 30 days prior to placing the equipment in operation. Procedures for submission of the electronic copy will be provided after award of the Contract. When review of the electronic copy by Engineer and is complete,

three copies of each electronic O&M manual shall be delivered on CD-ROM to Engineer. Each CD shall contain only one copy of one manual.

All material shall be marked with Project identification, and inapplicable information shall be marked out or deleted.

Shipment of equipment will not be considered complete until all required manuals and data have been received.

2.01. Hard Copy Operation and Maintenance Manuals. Hard copies submitted shall be temporarily bound in heavy paper covers bearing suitable identification. All manuals and other data shall be printed on heavy, first quality 8-1/2 x 11 inch paper, with standard three-hole punching. Drawings and diagrams shall be reduced to 8-1/2 x 11 inches or 11 x 17 inches. Where reduction is not practicable, larger drawings shall be folded separately and placed in envelopes, which are bound into the manuals. Each envelope shall be suitably identified on the outside. Each volume containing data for three or more items of equipment shall include a table of contents and index tabs. The final hard copy of each manual shall be prepared and delivered in substantial, permanent, three-ring or three-post binders with a table of contents and suitable index tabs.

2.02. Electronic Operation and Maintenance Manuals. Electronic manuals shall be in Portable Document Format (PDF), and shall be prepared at a resolution between 300 and 600 dots per inch (dpi), depending on document type. Optical Character Recognition (OCR) capture shall be performed on these documents. OCR settings shall be performed with the “original image with hidden text” option in Adobe Acrobat Exchange.

When multiple files are required the least number of files possible shall be created. File names shall be in the format OMXXXXX-YYYZ.pdf, where XXXXX is the five digit number corresponding to the specification section, YYY is a three digit O&M manual number, e.g. 001, and Z is the letter signifying a resubmittal, A, B, C, etc.

Documents prepared in PDF format shall be processed as follows:

1. Pages shall be searchable (processed for optical character recognition) and indexed when multiple files are required.

2. Pages shall be rotated for viewing in proper orientation.

3. A bookmark shall be provided in the navigation frame for each entry in the Table of Contents.

4. Embedded thumbnails shall be generated for each completed PDF file.

5. The opening view for PDF files shall be as follows:

   Initial View: Bookmarks and Page

   Page Number: Title Page (usually Page 1)

   Magnification: Set to Fit in Window

   Page: Single Page

6. Where the bookmark structure is longer than one page the bookmarks shall be collapsed to show the chapter headings only.

7. When multiple files are required the first file of the series (the parent file) shall list every major topic in the Table of Contents. The parent file shall also include minor headings bookmarked based on the Table of Contents. Major headings, whose content is contained in subsequent files (children) shall be linked to be called from the parent to the specific location in the child file. The child file shall contain bookmark entries for both major and minor headings contained in the child file. The first bookmark of any child file shall link back to the parent file and shall read as follows "Return to the *Equipment Name* Table of Contents", e.g. Return to the Polymer Feed System Table of Contents.

8. Drawings shall be bookmarked individually.

9. Files shall be delivered without security settings to permit editing, insertion and deletion of material to update the manual provided by the manufacturer.

2.03. Labeling. As a minimum, the following information shall be included on all final O&M manual materials, including CD-ROM disks, jewel cases, and hard copy manuals:

Equipment name and/or O&M title spelled out in complete words.
Project Name.
Owner Project/Contract Number.
Specification Section Number. Example: “Section 15500”
Manufacturer’s name.
File Name and Date.

For example:

Backwash Pump Operation and Maintenance Manual
Somewhere Plant Expansion
Project/Contract No. ____

Specification Section 11110
Manufacturer
OM11110-001.pdf, 5/05/07

End of Section

SUBMITTAL No. _____
SECTION _____
Do not combine multiple sections together
unless required by specifications.

(Contractor's Letterhead)

SUBMITTAL IDENTIFICATION & CONTRACTOR'S APPROVAL STATEMENT

DATE: _____ COPIES _____ DRAWING SHEET NO._____

Description submittal contents: _____
Location: _____
Manufacturer_____
Subcontractor or Supplier (Optional) _____

REMARKS: _____
_____
_____
_____

CONTRACTOR'S APPROVAL

(Construction Company) has reviewed and coordinated the submitted documentation and verifies that the equipment and material meet the requirements of the Work and the Contract Documents. We accept sole responsibility for determining and verifying all quantities, dimensions, field construction criteria, materials, catalog numbers, and similar data contained in the submittal as required by the Contract Documents.

Deviations: □ None □ Yes (See attached Figure 2-01300 for written description)

Approved By: _____ Date: _____

This approval does not release subcontractor / vendor from the contractual responsibilities.

Black & Veatch
Project No. _____Phase_____
Contract No. _____
Project Description: _____
_____

SUBMITTAL No. _____
SECTION _____
Do not combine multiple sections together
unless required by specifications.

(Contractor's Letterhead)

SUBMITTAL IDENTIFICATION & CONTRACTOR'S APPROVAL STATEMENT

DATE: _____ COPIES _____ DRAWING SHEET NO._____

Description submittal contents: _____
Location: _____
Manufacturer_____
Subcontractor or Supplier (Optional) _____

DEVIATIONS

_____
_____
_____
_____
_____
_____
_____
_____
_____
_____
_____
_____
_____
_____
_____
_____
_____
_____
_____
_____
_____
_____
_____
_____
_____
_____
_____
_____

Black & Veatch
Project No. _____Phase_____
Contract No. _____
Project Description: _____
_____

Section 01310

CONSTRUCTION PROGRESS SCHEDULE

1. GENERAL OVERVIEW. A Progress Schedule shall be used to control the Work and to provide a definitive basis for determining project progress. The Progress Schedule shall be prepared, maintained and updated by Contractor and historical dates agreed monthly with Engineer. Contractor shall submit a preliminary Progress Schedule and a Progress Schedule for acceptance by Engineer. These schedules shall be Contractor's working schedules and shall be used to plan, organize and execute the Work, record and report actual performance and progress, and show how Contractor plans to complete all remaining Work as of the end of each progress report period.

The Progress Schedule shall comprise all the detailed construction-related activities using the critical path method (CPM). The Progress Schedule shall provide sufficient detail and clarity to reflect the intricacies and interdependencies of activities so Contractor can plan, schedule, monitor, control and report on the progress of its work. In addition, it shall provide Engineer and Owner a tool to monitor and follow the progress for all phases of the Work.

The Contractor shall have the capability of preparing and utilizing the specified construction progress scheduling techniques. A statement of capability shall be submitted in writing to the Engineer with the return of the executed Agreement to the Owner and will verify that either the Contractor's organization has in-house capability qualified to use the technique or that the Contractor employs a consultant who is so qualified. Capability shall be verified by description of the construction projects to which the Contractor or its consultant has successfully applied the scheduling technique and which were controlled throughout the duration of the project by means of systematic use and updating of the construction progress schedule, the network analysis and associated reports. The submittal shall include the name of the individual on the Contractor's staff who will be responsible for the construction progress schedule and associated reports and for providing the required updating information of same. The Contractor shall submit its proposed progress schedule to the Engineer for review and comment within ten days of the Notice to Award.

2. PRE-CONSTRUCTION SCHEDULING CONFERENCE. The Contractor shall present and discuss the proposed schedule at the preconstruction conference.

3. PRELIMINARY PROGRESS SCHEDULE. Not used.

4. PROGRESS SCHEDULE. The Progress Schedule comprises all the construction-related activities for the Work and shall show the order in which Contractor proposes to carry out the work. Contractor shall include milestones, coordination necessitated by limited access and available work areas, and the availability and use of workforce, material and equipment. Contractor shall use

the Progress Schedule to plan, schedule and coordinate the Work including activities of subcontractors, equipment vendors, and suppliers.

The Progress Schedule shall be to the level of detail acceptable to Engineer, and shall include the following:

a. Organization and structural breakdown of the Project;
b. Milestones and completion dates;
c. Planning for phased or total acceptance by Owner;

Each computer-generated construction progress schedule and associated report shall include the following tabulations: a list of activities in numerical order, a list of activity precedence, schedules sequenced by Early Start Date, Total Float, and Late Start Date. Each schedule and report shall include the following minimum items.

i. Activity Numbers.
ii. Estimated Duration.
iii. Activity Description.
iv. Early Start Date (Calendar Dated).
v. Early Finish Date (Calendar Dated).
vi. Latest Allowable Start Date (Calendar Dated).
vii. Latest Allowable Finish Date (Calendar Dated).
viii. Status (whether critical).
ix. Total Float and Free Float.
x. Resource Plots.

In addition, each construction progress schedule, network analysis and report shall be prefaced with the following summary data:

i. Contract Name and Number.
ii. Contractor's Name.
iii. Contract Duration and Float.
iv. Contract Schedule with critical path.
v. The Effective or Starting Date of The Schedule (the date indicated in the Notice-to-Proceed).

The work day to calendar date correlation shall be based on an 8-hour day and 40-hour week with adequate allowance for holidays, adverse weather and all other special requirements of the Work. Normal work hours are Monday through Friday, 7:30 am to 5:30 pm, any afterhours/weekends work must be approved by the Owner.

To the extent that the construction project schedule, or associated report or any revision thereof shows anything not jointly agreed upon or fails to show anything jointly agreed upon, it shall not be deemed to have been accepted by the Engineer. Failure to include on a schedule any element of Work required for the performance of this Contract shall not excuse the Contractor from completing all

Work required within any applicable completion date, notwithstanding the review of the schedule by the Engineer.

Review and acceptance of the construction progress schedule, and related reports, by the Engineer is advisory only and shall not relieve the Contractor of the responsibility for accomplishing the Work within the contract completion date. Omissions and errors in the construction progress schedule, and related reports shall not excuse performance less than that required by the Contract and in no way make the Engineer an insurer of the Contractor's success or liable for time or cost overruns flowing from any shortcomings in the construction progress schedule, and related reports.

The construction progress schedule shall be based upon the precedence diagramming method of scheduling and shall be prepared in the form of a horizontal bar chart showing in detail the proposed sequence of the Work and identifying all construction activities included but not limited to yard piping, all structures and treatment units and all related Work specified herein to be performed under the Contract. The schedule shall be time scaled, identifying the first day of each week, with the estimated date of starting and completion of each stage of the Work in order to complete the project within the contract time. The project critical path shall be clearly identified.

When the Progress Schedule is accepted by Engineer, Engineer will save a copy of the Progress Schedule as the baseline schedule, and will use it for analysis of Contractor’s progress.

5. ELECTRONIC PROGRESS SCHEDULE FORMAT AND REPORTING. The Progress Schedule shall be created using Primavera P6, or equal, scheduling software.

The data date for schedule calculation in the Progress Schedule shall be set as the date of the Notice to Proceed unless otherwise specified by Engineer.

6. COST-LOADING. Not used.

7. RESOURCE-LOADING. Not used.

8. COORDINATING PROGRESS SCHEDULE WITH OTHER CONTRACT SCHEDULES. Not used.

9. SUBMITTALS. The Progress Schedule and associated reports shall be submitted to Engineer for acceptance within 15 calendar days after Notice to Proceed. If the Progress Schedule is not submitted, no progress payments will be made after the due date until the Progress Schedule has been submitted.

The progress schedule shall be plotted to a 22-inch by 34-inch size and shall be revised and updated monthly, depicting progress through the last day of the current month and scheduled progress through completion. An electronic version

of the schedule shall be submitted along with the application for monthly progress payments for the same period.

10. MONTHLY SCHEDULE UPDATES. Monthly Progress Schedule updates shall be submitted for the duration of the Contract on a date agreed to by Owner, Engineer, and Contractor.

The updated schedule shall be reviewed each month in a meeting with Engineer to verify:

a. Actual start dates,
b. Actual completion dates,
c. Activity percent completion,
d. Cost influence of change orders, if any,
e. Revisions due to extension of time.

Prior to each meeting, Contractor shall prepare a complete and accurate report of current procurement and construction progress through the end of the update period, and a depiction of how Contractor plans to continue the Work to meet all contract completion dates. All network changes and status data agreed to during each update meeting shall be considered as accepted by both parties unless written notice of any exceptions is given within five calendar days after the meeting.

If the Contractor desires to make changes in its method of operating which affect the construction progress schedule and related items, it shall notify the Engineer in writing stating what changes are proposed and the reason for the change. If the Engineer accepts these changes, in writing, the Contractor shall revise and submit, without additional cost to the Owner, all of the affected portions of the construction progress schedule, and associated reports. The construction progress schedule and related items shall be adjusted by the Contractor only after prior acceptance, in writing by the Engineer. Adjustments may consist of changing portions of the activity sequence, activity durations, division of activities, or other adjustments as may be required. The addition of extraneous, nonworking activities and activities which add restraints to the construction progress schedule shall not be accepted.

11. DATA DATE. Not used.

12. REVIEW PROCESS. Not Used

13. RESPONSIBILITY FOR SCHEDULE COMPLIANCE. Whenever it becomes apparent from the current Progress Schedule that the critical path is delayed and the contract completion date will not be met, Contractor shall mitigate the delay by taking some or all of the following actions at no additional cost to Owner:

a. Increase construction workforce in such quantities and crafts as will bring the project back on schedule within the completion dates and milestones.

b. Increase the number of working hours per shift, shifts per day, working days per week, and the amount of construction equipment, or any combination of the foregoing, to substantially eliminate the backlog of work.

c. Re-schedule activities to achieve maximum practical concurrence of activities and to comply with the schedule date(s).

Within 10 calendar days of Engineer's request, Contractor shall submit a recovery schedule and written statement of the steps intended to remove or arrest the delay to the critical path in the schedule. If Contractor fails to submit the required information or should fail to take measures acceptable to Engineer, Engineer with Owner concurrence may direct Contractor to increase workforce, equipment and scheduled work hours to remove or arrest the delay to the critical path and Contractor shall promptly provide such level of effort at no additional cost to Owner.

In the event Contractor fails to follow the updated or revised recovery schedule, Owner may elect to withhold progress payments until Contractor complies with the revised schedule.

Should Contractor's efforts not remove or arrest the delay to the critical path of the accepted schedule, then Owner shall be entitled to supplement Contractor's work-force and equipment to remove and arrest any delay, and shall be entitled to deduct all costs and expenses associated therewith from payments due to Contractor. If insufficient Contract funds remain, Owner may recover such funds from Contractor and its Surety.

Except where earlier completions are specified, schedule dates which show completion of all Work prior to the contract completion date shall, in no event, be the basis for claim for delay against the Owner by the Contractor.

Construction progress schedules and related items which contain activities showing negative float or which extend beyond the contract completion date will be accepted only upon the condition that the Contractor will comply with recovery schedule requirements.

14. CHANGES IN THE WORK, DELAYS, AND EXTENSIONS OF TIME. The contract time will be adjusted only in accordance with the General Requirements and other portions of the Contract Documents as may be applicable. If the Engineer finds that the Contractor is entitled to any extension of the contract completion date, the Engineer's determination as to the total number of days extension shall be based upon the current construction progress schedule and on all data relevant to the extension. Such data shall be included in the next

updating of the schedule and related items. Actual delays in activities which, according to the construction progress schedule, do not affect any contract completion date will not be the basis for a change therein.

From time to time it may be necessary for the contract schedule of completion time to be adjusted by the Owner in accordance with the General Requirements and other portions of the Contract Documents as may be applicable. Under such conditions, the Engineer will direct the Contractor to reschedule the Work or contract completion time to reflect the changed conditions, and the Contractor shall revise the construction progress schedule and related items accordingly, at no additional cost to the Owner.

Available float time may be used by the Owner through the Owner's Engineer.

The Owner controls the float time and, therefore, without obligation to extend either the overall completion date or any intermediate completion dates, the Owner may initiate changes that absorb float time only. Owner initiated changes that affect the critical path on the network diagram shall be the sole grounds for extending the completion dates. Contractor initiated changes that encroach on the float time may be accomplished only with the Owner's concurrence. Such changes, however, shall give way to Owner-initiated changes competing for the same float time.

Each time impact analysis shall demonstrate the estimated time impact based on the events of the change or the delay; the date the change was given to Contractor or the delay incurred, the status of construction at that point in time, and the event time computation of all activities affected by the change or delay. The event times used in the analysis shall be those included in the latest update of the Progress Schedule or as adjusted for the events of delay.

Three copies of the time impact analysis and an electronic copy on compact disk shall be submitted within seven calendar days of delay occurrence or direction to proceed with a change is given to Contractor. No time extensions will be considered if the time impact analysis is not submitted within the specified time.

Engineer will review Contractor’s time impact analysis. Contractor shall furnish such justification and supporting evidence as Engineer deems necessary to determine whether Contractor is entitled to an extension of time. Engineer’s review of each time impact analysis will be made within five working days of receipt of the time impact analysis and additional information as required by Engineer, unless subsequent meetings and negotiations are necessary.

The Contract Times will be adjusted only for causes specified in paragraph 15. Time extensions will be granted only to the extent that equitable time adjustments for the activity or activities affected exceed the total or remaining Float along the critical path at the time of actual delay. Delays in activities which

are not on the critical path and do not affect Contract Times, will not be considered for an extension of time.

15. CAUSES FOR EXTENSIONS OF TIME. Additional positive total Float in the Progress Schedule generated by efficiencies of Owner or Contractor is a shared commodity to be reasonably used by either party, and belongs exclusively to the Project. Contractor is not entitled to any additional compensation for completion of the project prior to expiration of the Contract Times.

15.01. Owner-Initiated Changes. Owner initiated changes to the Work that absorb Float time will not be considered for an extension of time. Owner-initiated changes that affect the critical path of the Progress Schedule shall be grounds for extending or shortening completion dates. Use of Float time for Contractor initiated changes will require Owner's concurrence. Contractor's changes, however, shall give way to Owner-initiated changes competing for the same Float time.

15.02. Outside Contractor's Control. Events outside of Contractor's control that affect the critical path of the Progress Schedule will be considered for an extension or reduction of the Contract Times.

15.03. Weather Delays. Engineer will determine Contractor's entitlement to an extension of the Contract Times as a result of weather delays.

Any weather-related extension of Contract Times shall be non-compensable. Efficiencies gained as a result of favorable weather within a calendar month, where the number of days of normally anticipated weather days is less than expected, shall contribute to the project Float and shall not affect the Contract Times.

16. AS-BUILT SCHEDULE. Not used.

17. SCHEDULING SOFTWARE APPLICATION. Not used.

18. SCHEDULE SOFTWARE SETTINGS AND RESTRICTIONS: Not used.

19. ACTIVITY CODES. Not used.

20. ACTIVITY RELATIONSHIPS. Not used.

21. PROJECT CALENDARS. Not used.

22. FLOAT. Contractor shall not use Float suppression techniques, including preferential sequencing (arranging critical path through activities more susceptible to Owner caused delay); lag logic restraints; zero total or free Float constraints; extended activity times; or imposing constraint dates other than as required by the Contract. Float suppression will be cause for rejection of the preliminary Progress Schedule or full Progress Schedule and its updates.

23. MANDATORY MILESTONES. The Contract duration shall be equal to the time period between the Notice to Proceed and the completion of the Work in readiness for final payment. The following milestones are mandatory.

a. Notice to Proceed.
b. Milestones, if any, as indicated in Contractor's Bid.
c. Substantial Completion as indicated in Contractor's Bid.
d. Completion and readiness for final payment, as indicated in Contractor's Bid.

End of Section

Section 01320

CONSTRUCTION PROGRESS DOCUMENTATION

1. GENERAL.

1.01. Units of Measurement. When both inch-pound (English) and SI (metric) units of measurement are specified herein, the values expressed in inch-pound units shall govern.

2. SCHEDULE OF VALUES. After review of the preliminary schedule at the preconstruction conference, and before submission of the first Application for Payment, Contractor shall prepare and submit to Engineer a Schedule of Values covering each lump sum item. The Schedule of Values, showing the value of each kind of work, shall be acceptable to Engineer before any Application for Payment is prepared.

The sum of the items listed in the Schedule of Values shall equal the Contract Price. Such items as Bond premium, temporary construction facilities, and plant may be listed separately in the Schedule of Values, provided the amounts can be substantiated. Overhead and profit shall not be listed as separate items.

The Schedule of Values shall have sufficient detail such that partial completion of separable items of work can easily be calculated. The Schedule of Values shall have separate lines for manufacturer's field services, O&M manuals, and performance testing for each item of equipment requiring such services.

An unbalanced Schedule of Values providing for overpayment of Contractor on items of Work which would be performed first will not be accepted. The Schedule of Values shall be revised and resubmitted until acceptable to Engineer. Final acceptance by Engineer shall indicate only consent to the Schedule of Values as a basis for preparation of applications for progress payments, and shall not constitute an agreement as to the value of each indicated item.

3. SCHEDULE OF PAYMENTS. Within 30 days after award of contract, Contractor shall furnish to Engineer a schedule of estimated monthly payments. The schedule shall be revised and resubmitted each time an Application for Payment varies more than 10 percent from the estimated payment schedule.

4. SURVEY DATA. Not used.

5. LAYOUT DATA. Not used.

End of Section

Section 01380

CONSTRUCTION PHOTOGRAPHS

PART 1 - GENERAL

1.01 SUMMARY: This section includes providing construction photographs and video pertinent to the Contract work during the Contract period as specified.

1.01. Pre-Construction Photographs. A minimum of thirty (30) photographs of the entire site, or pertinent features thereof, shall be taken before the commencement of Work and promptly submitted to Engineer. These photographs shall include roads, fences, sidewalks, manholes, stormwater and erosion controls including the existing storm water outfall.

1.02. Post-Construction Photographs. The same views captured in the pre-construction photographs shall be rephotographed upon completion of all construction activities and submitted with Contractor's application for final payment.

1.03. Intermittent Construction Photographs. During each calendar month of construction, a minimum of 50 photographs shall be taken of all new construction as the Work progresses.

For piping, photographs shall be taken at a minimum of 40-foot intervals.

Intermittent photographs shall be submitted with Contractor's application for progress payment.

2. PHOTOGRAPH FORMAT AND ORGANIZATION. Photographs shall be taken in color and shall be taken and submitted to the Engineer in digital format.

2.01. Resolution. All photographs shall be JPEG (Joint Photographic Experts Group) with a minimum resolution of 1024x768 pixels and a maximum resolution of 1280x1024 pixels.

2.02. Filenames. All photograph filenames shall follow a syntax of

YYYY-MM-DD_LOC_DESC.jpg

Where,
YYYY = the four-digit year.
MM = the two-digit month.
DD = the two-digit day.
LOC = the site location where the photograph was taken.
DESC = a general description of the subject of the photograph.

2.03. Media. Contractor shall submit the photographs electronically on a flash drive. Files may be grouped into descriptive folders as necessary.

3. SUBMITTALS. Files shall be submitted to the Engineer in accordance with the provisions of the Submittals Procedures section.

End of Section

Section 01400

QUALITY CONTROL

1. GENERAL. The Contractor shall develop and maintain a program, acceptable to Owner and Engineer, to ensure that all work required under this Contract strictly conforms to all requirements of the Contract Documents. The Contractor shall be responsible for and shall supervise the work of all subcontractors, providing instructions to each when their work does not conform to the requirements of the Quality Control Program and the Contract Documents

2. SAMPLING AND TESTING. Unless otherwise specified, all sampling and testing shall be in accordance with the methods prescribed in the current standards of the ASTM, as applicable to the class and nature of the article or materials considered; however, the Owner reserves the right to use any generally-accepted system of sampling and testing which, in the opinion of the Engineer will insure the Owner that the quality of the work is in full accord with the Contract Documents.

Any waiver by the Owner of any specific testing or other quality assurance measures, whether or not such waiver is accompanied by a guarantee of substantial performance as a relief from the specified testing or other quality assurance requirements as originally specified, and whether or not such guarantee is accompanied by a performance bond to assure execution of any necessary corrective or remedial Work, shall not be construed as a waiver of any requirements of the Contract Documents.

Notwithstanding the existence of such waiver, the Engineer reserves the right to make independent investigations and tests and failure of any portion of the Work to meet any of the requirements of the Contract Documents, shall be reasonable cause for the Engineer to require the removal or correction and reconstruction of any such Work in accordance with the General Conditions.

Testing services shall be provided in accordance with Article 49 of the General Conditions. All tests to determine compliance with the Contract Documents shall be performed by an independent commercial testing firm acceptable to Engineer and/or Authority Having Jurisdiction excluding testing as specified to be conducted directly by Contractor. The testing firm's laboratory shall be staffed with experienced technicians, properly equipped and fully qualified to perform the tests in accordance with the specified standards.

Testing services provided by Owner are for the sole benefit of Owner and/or as required by the governing building code; however, test results shall be available to Contractor. Testing necessary to satisfy Contractor's internal quality control procedures shall be the sole responsibility of Contractor.

2.01. Testing Services Provided by Contractor. Unless otherwise specified, Contractor shall provide all testing services in connection with the following:

a. Any Work or part thereof specifically to be inspected, tested or approved by an employee or representative of an Authority Having Jurisdiction. Contractor shall assume full responsibility for arranging and obtaining such inspections, tests or approvals. Contractor shall pay all costs associated for these activities and shall provide the required certificates of inspection or approval.

b. Any inspections, tests or approvals required for Owner or Engineer acceptance of materials or equipment to be incorporated in the Work. This includes any items required for acceptance of materials, concrete mix designs or equipment submitted for approval prior to Contractor's purchase for incorporation in the Work.

c. Testing, adjusting and balancing of mechanical, electrical and other equipment and systems as specified to be incorporated into the Work. This includes services required by manufacturers of equipment or other products such as concrete repair products, pipe, coatings, linings and roof membranes furnished under the Contract Documents.

d. Tightness testing of containment structures and pressure or leakage testing of piping as specified.

e. Any Work (or part thereof) required by the Contract Documents to be approved by Owner, Engineer or other designated individual or entity. Contractor shall assume full responsibility for arranging and obtaining such approvals, pay all costs in connection therewith and submit to Engineer the required certificates of approval.

Excluding those conducted directly by an Authority Having Jurisdiction or expressly specified to be conducted directly by Contractor, inspections and tests shall be performed by independent inspectors, approved agencies or other qualified individuals or entities acceptable to Owner and Engineer.

2.02. Testing Services and Special Inspections Provided by Owner. Unless otherwise specified, Owner shall employ and pay for the services of an independent testing laboratory, approved agency or other qualified individual or entities for inspections, tests or approvals required by the Contract Documents for field quality control.

Contractor shall provide access to the site and Work in accordance with the General Conditions. Contractor shall give timely notice of the readiness of the Work for inspection, tests or approvals and shall cooperate with the inspection and testing personnel to facilitate the required tests and inspections. Contractor shall furnish all sample materials and cooperate in the testing activities, including sampling. Contractor shall interrupt the Work when necessary to allow testing, including sampling, to be performed. Contractor shall have no Claim for an increase in Contract Price or Contract Times due to such interruption. When

testing activities, including sampling, are performed in the field by Engineer or Agency personnel, Contractor shall furnish personnel and facilities to assist in the activities as required.

2.03. Transmittal of Test Reports. Written reports of tests and engineering data furnished by Contractor for Engineer's review of materials and equipment proposed to be used in the Work shall be submitted as specified for Shop Drawings.

The Approved Agency retained by Owner will furnish four copies of a written report of each test. Two copies of each test report will be transmitted to the Resident Project Representative, one copy to Engineer, and one copy to Contractor, within three days after each test is completed.

3. SITE INVESTIGATION AND CONTROL. The Contractor shall verify all dimensions in the field and shall check field conditions continuously during construction. The Contractor shall be solely responsible for any inaccuracies built into the Work due to its failure to comply with this requirement.

The Contractor shall inspect related and appurtenant Work and shall report in writing to the Engineer any conditions which will prevent proper completion of the Work. Failure to report any such conditions shall constitute acceptance of all site conditions, and any required removal, repair, or replacement caused by unsuitable conditions shall be performed by the Contractor within the scope of the Project

4. RIGHT OF REJECTION. The Engineer, acting for the Owner, shall have the right, at all times and places, to reject any articles or materials to be furnished hereunder which, in any respect, fail to meet the requirements of the Contract Documents, regardless of whether the defects in such articles or materials are detected at the point of manufacture or after completion of the Work at the site. If the Engineer or its representative, through an oversight or otherwise, has accepted materials or Work which is defective or which is contrary to the Contract Documents, such materials, no matter in what stage or condition of manufacture, delivery, or erection, may be subsequently rejected by the Engineer for the Owner.

The Contractor shall promptly remove rejected articles or materials from the site of the Work after notification of rejection. All costs of removal and replacement of rejected articles or materials as specified herein shall be borne by the Contractor

5. OTHER CONSTRUCTION CONSIDERATIONS.

5.01. Weather Conditions. Work that may be affected by inclement weather shall be suspended until proper conditions prevail. In the event of impending storms, the Contractor shall take necessary precautions to protect all work, materials and equipment from exposure.

5.02. Fire Protection. The Contractor shall take all necessary precautions to prevent fires at or adjacent to the Work, including its own buildings and trailers.

Adequate fire extinguisher and hose line stations shall be provided throughout the work area.

6. OFFSITE INSPECTION. Not used.

7. MANUFACTURER'S FIELD SERVICES. Not used.

End of Section

Section 01500

TEMPORARY FACILITIES AND CONTROLS

1. GENERAL. It shall be the Contractor's responsibility to provide equipment that is adequate for the performance of the Work under this Contract within the time specified. All equipment shall be kept in satisfactory operating condition, shall be capable of safely and efficiently performing the required Work, and shall be subject to review by the Owner's representative at any time within the duration of the Contract. All Work hereunder shall conform to the applicable requirements of the OSHA Standards for Construction.

The Contractor shall provide for utilities and services for its own operations. The Contractor shall furnish, install and maintain all temporary utilities during the contract period including removal upon completion of the Work.

2. UNITS OF MEASUREMENT. When both inch-pound (English) and SI (metric) units of measurement are specified herein, the values expressed in inch-pound units shall govern.

3. OFFICES AT SITE OF WORK. During the performance of this Contract, Contractor shall maintain a suitable office at or near the Site which shall be the headquarters of its representative authorized to receive drawings, instructions, or other communication or articles. Any communication given to the said representative or delivered at Contractor's office at the Site in the representative's absence shall be deemed to have been delivered to Contractor.

Copies of the Drawings, Specifications, and other Contract Documents shall be kept at Contractor's office at the Site and available for use at all times.

4. WATER. Except as noted otherwise, the Contractor shall make arrangements for and pay for all costs for all water used for construction, testing and startup. The Contractor shall provide and maintain all meters, piping, fittings, adapters, and valving required.

Potable water is available at cost from the Owner for the Work. To obtain potable water, if required, the Contractor shall install a Owner supplied meter. The Owner will charge the Contractor for potable water. Contractor shall discuss all potable water service requirements during the pre-bid conference. The Contractor shall make all necessary connections to existing piping and shall provide all necessary appurtenances at their own expense.

4.01. Water Connections. The Contractor shall not make connection to, or draw water from, any fire hydrant or pipeline without first obtaining permission of the authority having jurisdiction over the use of said fire hydrant or pipeline and from the agency owning the affected water system. For each such connection made, the Contractor shall first attach to the fire hydrant or pipeline a valve and a meter,

if required by the said authority, of a size and type acceptable to said authority and agency.

4.02. Removal of Water Connections. Before final acceptance of the Work on the project, all temporary connections and piping installed by the Contractor shall be entirely removed, and all affected improvements shall be restored to their original condition, or better, to the satisfaction of the Engineer and to the agency owning the affected utility.

4.03. Fire Protection. The construction and all other parts of the Work shall be connected with the Contractor's water supply system and shall be adequately protected against damage by fire. Hose connections and hose, water casks, chemical equipment, or other sufficient means shall be provided for fighting fires in the temporary structures and other portions of the Work, and responsible persons shall be designated and instructed in the operation of such fire apparatus so as to prevent or minimize the hazard of fire. The Contractor's fire protection program shall conform to the requirements of Subpart F of the OSHA Standards for Construction and all local Fire Department Requirements

5. POWER. The Contractor shall provide all necessary power required for its operations under the Contract, and shall provide and maintain all temporary power lines required to perform the Work in a safe and satisfactory manner

5.01. Construction Lighting. All Work conducted at night or under conditions of deficient daylight shall be suitably lighted to insure proper Work and to afford adequate facilities for inspection and safe working conditions. Temporary lighting shall be maintained during nonworking periods if the area is subject to access by the public or Owner's personnel.

5.02. Electrical Connections. All temporary connections for electricity shall be subject to review by the Engineer and the power company representative, and shall be removed in like manner at the Contractor's expense prior to final acceptance of the Work.

5.03 Separation of Circuits. Unless otherwise permitted by the Engineer, circuits separate from lighting circuits shall be used for all power purposes.

5.04 Construction Wiring. All wiring for temporary electric light and power shall be properly installed and maintained and shall be securely fastened in place. All electrical facilities shall conform to the requirements of Subpart K of the OSHA Safety and Health Standards for Construction.

6. VOICE AND DATA SERVICES. Not used

7. TEMPORARY SANITARY FACILITIES. Toilet Facilities: Fixed or portable chemical toilets shall be provided wherever needed for the use of employees. Toilets at construction job sites shall conform to the requirements of Part 1926 of the OSHA Standards for Construction.

Such facilities shall be made available when the first employees arrive on the Work, shall be properly secluded from public observation, and shall be constructed and maintained in suitable numbers and at such points and in such manner as may be required.

The Contractor shall maintain the sanitary facilities in a satisfactory and sanitary condition at all time and shall enforce their use. It shall rigorously prohibit the committing of nuisances on the site of the Work, on the lands of the Owner, or on adjacent property.

The Owner and the Engineer shall have the right to inspect any building or other facility erected, maintained, or used by the Contractor, to determine whether or not the sanitary regulations have been complied with.

Sanitary and Other Organic Wastes: The Contractor shall establish a regular daily collection of all sanitary and organic wastes. All wastes and refuse from sanitary facilities provided by the Contractor or organic material wastes from any other source related to the Contractor's operations shall be disposed of away from the site in a manner satisfactory to the Engineer and in accordance with all laws and regulations pertaining thereto.

8. CONSTRUCTION AIDS. Contractor shall furnish, install, maintain, and operate all construction aids required by it and its Subcontractors in the performance of the Work, except as otherwise provided herein.
Contractor shall provide construction aids necessary for the performance of work. Such construction aids shall be suitable for conditions encountered and shall include:

a. Hoists
b. Cranes
c. Scaffolding

9. MAINTENANCE OF TRAFFIC. Contractor shall conduct its work to interfere as little as possible with public travel, whether vehicular or pedestrian. Whenever it is necessary to cross, obstruct, or close roads, driveways, and walks, whether public or private, Contractor shall provide and maintain suitable and safe bridges, detours, or other temporary expedients for the accommodation of public and private travel, and shall give reasonable notice to owners of private drives before interfering with them. Such maintenance of traffic will not be required when Contractor has obtained permission from the owner and tenant of private property, or from the authority having jurisdiction over public property involved, to obstruct traffic at the designated point.

In making open-cut street crossings, Contractor shall not block more than one-half of the street at a time. Whenever possible, Contractor shall widen the shoulder on the opposite side to facilitate traffic flow. Temporary surfacing shall be provided as necessary on shoulders.

9.01. Temporary Bridges. Not used

9.02. Detours. Not used.

10. BARRICADES AND LIGHTS. All streets, roads, highways, and other public thoroughfares which are closed to traffic shall be protected by effective barricades on which shall be placed acceptable warning signs. Barricades shall be located at the nearest intersecting public highway or street on each side of the blocked section.

All open trenches and other excavations shall have suitable barricades, signs, and lights to provide adequate protection to the public. Obstructions, such as material piles and equipment, shall be provided with similar warning signs and lights.

All barricades and obstructions shall be illuminated with warning lights from sunset to sunrise. Material storage and conduct of the Work on or alongside public streets and highways shall cause the minimum obstruction and inconvenience to the traveling public.

All barricades, signs, lights, and other protective devices shall be installed and maintained in conformity with applicable statutory requirements and, where within railroad and highway rights-of-way, as required by the authority having jurisdiction.

11. FENCES. All existing fences affected by the Work shall be maintained by Contractor until completion of the Work. Fences which interfere with construction operations shall not be relocated or dismantled until written permission is obtained from the owner of the fence, and the period the fence may be left relocated or dismantled has been agreed upon. Where fences must be maintained across the construction easement, adequate gates shall be installed. Gates shall be kept closed and locked at all times when not in use.

On completion of the Work across any tract of land, Contractor shall restore all fences to their original or to a better condition and to their original locations.

12. PROTECTION OF PUBLIC AND PRIVATE PROPERTY. Contractor shall protect, shore, brace, support, and maintain all underground pipes, conduits, drains, and other underground construction uncovered or otherwise affected by its construction operations. All pavement, surfacing, driveways, curbs, walks, buildings, utility poles, guy wires, fences, and other surface structures affected by construction operations, together with all sod and shrubs in yards, parkways, and medians, shall be restored to their original condition, whether within or outside the easement. All replacements shall be made with new materials.

No trees shall be removed outside the permanent easement, except where authorized by Engineer

Contractor shall be responsible for all damage to streets, roads, highways, shoulders, ditches, embankments, culverts, bridges, and other public or private property, regardless of location or character, which may be caused by transporting equipment, materials, or workers to or from the Work or any part or site thereof, whether by Contractor of its Subcontractors. Contractor shall make satisfactory and acceptable arrangements with the owner of, or the agency or authority having jurisdiction over, the damaged property concerning its repair or replacement or payment of costs incurred in connection with the damage.

All fire hydrants and water control valves shall be kept free from obstruction and available for use at all times.

13. DAMAGE TO EXISTING PROPERTY. Contractor will be held responsible for any damage to existing structures, Work, materials, or equipment because of their operations and shall repair or replace any damaged structures, Work, materials, or equipment to the satisfaction of, and at no additional cost to Owner.

Contractor shall protect all existing structures and property from damage and shall provide bracing, shoring, or other work necessary for such protection.

14. SECURITY. Contractor shall be responsible for protection of the Site, and all Work, materials, equipment, and existing facilities thereon, against vandals and other unauthorized persons.

No claim shall be made against Owner by reason of any act of an employee or trespasser, and Contractor shall make good all damage to Owner's property resulting from Contractor's failure to provide security measures as specified.

Security measures shall be at least equal to those usually provided by Owner to protect Owner's existing facilities during normal operation, but shall also include such additional security fencing, barricades, lighting, and other measures as required to protect the Site.

15. ACCESS ROADS. Not used.

16. PARKING. Contractor shall coordinate with Owner to designate parking areas for the use of all workers and others performing work or furnishing services in connection with the Project, as required to avoid any need for parking personal vehicles where they may interfere with public traffic, Owner's operations, or construction activities.

17. NOISE CONTROL. Noise resulting from the Contractor’s work shall not exceed the noise level and other requirements stated in local ordinances. Contractor shall take reasonable measures to avoid unnecessary noise. Such measures shall be appropriate for the normal ambient sound levels in the area during working hours. All construction machinery and vehicles shall be equipped with practical sound-muffling devices, and operated in a manner to cause the least noise consistent with efficient performance of the Work.

During construction activities on or adjacent to occupied buildings, and when appropriate, Contractor shall erect screens or barriers effective in reducing noise in the building and shall conduct its operations to avoid unnecessary noise which might interfere with the activities of building occupants.

18. DUST CONTROL. The Contractor shall furnish all labor, equipment, and means required and shall carry out effective measures wherever and as often as necessary (as determined by the Engineer) to prevent its operation from producing dust in amounts damaging to property, cultivated vegetation, or domestic animals, or causing a nuisance to persons living in or occupying buildings in the vicinity. The Contractor shall be responsible for any damage resulting from any dust originating from its operations. The dust abatement measures shall be continued until the Contractor is relieved of further responsibility by the Engineer. No separate payment will be allowed for dust abatement measures and all costs thereof shall be included in the Contractor's bid price. Contractor shall take reasonable measures to prevent unnecessary dust. Earth surfaces subject to dusting shall be kept moist with water or by application of a chemical dust suppressant. When practicable, dusty materials in piles or in transit shall be covered to prevent blowing dust.

Buildings or operating facilities which may be affected adversely by dust shall be adequately protected from dust. Existing or new machinery, motors, instrument panels, or similar equipment shall be protected by suitable dust screens. Proper ventilation shall be included with dust screens.

19. TEMPORARY DRAINAGE PROVISIONS. Contractor shall provide for the drainage of storm water and such water as may be applied or discharged on the Site in performance of the Work. Drainage facilities shall be adequate to prevent damage to the Work, the Site, and adjacent property.

Existing drainage channels and conduits shall be cleaned, enlarged, or supplemented as necessary to carry all increased runoff attributable to Contractor's operations. Dikes shall be constructed as necessary to divert increased runoff from entering adjacent property (except in natural channels), to protect Owner's facilities and the Work, and to direct water to drainage channels or conduits. Ponding shall be provided as necessary to prevent downstream flooding.

20. EROSION CONTROL. Contractor shall prevent erosion of soil on the Site and adjacent property resulting from its construction activities. Effective measures shall be initiated prior to the commencement of clearing, grading, excavation, or other operation that will disturb the natural protection.
Work shall be scheduled to expose areas subject to erosion for the shortest possible time, and natural vegetation shall be preserved to the greatest extent practicable. Temporary storage and construction buildings shall be located, and construction traffic routed, to minimize erosion. Temporary fast-growing

vegetation or other suitable ground cover shall be provided as necessary to control runoff.

21. POLLUTION CONTROL. Contractor shall prevent the pollution of drains and watercourses by sanitary wastes, sediment, debris, and other substances resulting from construction activities. No sanitary wastes shall be permitted to enter any drain or watercourse other than sanitary sewers. No sediment, debris, or other substance shall be permitted to enter sanitary sewers, and reasonable measures shall be taken to prevent such materials from entering any drain or watercourse.

22. CONFINED SPACES. The Contractor shall provide and maintain adequate ventilation for a safe working environment. In addition, forced air ventilation shall be provided for the curing of installed materials, humidity control and the prevention of hazardous accumulations of dust, gases or vapors.

23. CHEMICALS. All chemicals used during project construction or furnished for project operation, whether defoliant, soil sterilant, herbicide, pesticide, disinfectant, polymer, paint, fuel, solvent or reactant of other classification, shall show approval of either the U.S. Environmental Protection Agency or the U.S. Department of Agriculture. The handling, storage, use and disposal of all such chemicals and disposal of residues shall be in strict accordance with all applicable rules and regulations of Federal, State and local jurisdictional agencies and the printed instructions of the manufacturer and all regulatory requirements. Copies of antidote literature shall be kept at the storage site and at the Contractor's job site office. A supply of antidotes shall be kept at the Contractor's office.

End of Section

Section 01610

GENERAL EQUIPMENT STIPULATIONS

1. SCOPE. When an equipment specification section in this Contract references this section, the equipment shall conform to the general stipulations set forth in this section, except as otherwise specified in other sections.

2. COORDINATION. Contractor shall coordinate all details of the equipment with other related parts of the Work, including verification that all structures, piping, wiring, and equipment components are compatible. Contractor shall be responsible for all structural and other alterations in the Work required to accommodate equipment differing in dimensions or other characteristics from that contemplated in the Drawings or Specifications.

3. MANUFACTURER'S EXPERIENCE. Unless specifically named in the Specifications, a manufacturer shall have furnished equipment of the type and size specified which has been in successful operation for not less than the past 5 years.

4. WORKMANSHIP AND MATERIALS. Contractor shall guarantee all equipment against faulty or inadequate design, improper assembly or erection, defective workmanship or materials, and leakage, breakage, or other failure. Materials shall be suitable for service conditions.

All equipment shall be designed, fabricated, and assembled in accordance with recognized and acceptable engineering and shop practice. Individual parts shall be manufactured to standard sizes and thicknesses so that repair parts, furnished at any time, can be installed in the field. Like parts of duplicate units shall be interchangeable. Equipment shall not have been in service at any time prior to delivery, except as required by tests.

Except where otherwise specified, structural and miscellaneous fabricated steel used in equipment shall conform to AISC standards. All structural members shall be designed for shock or vibratory loads. Unless otherwise specified, all steel which will be submerged, all or in part, during normal operation of the equipment shall be at least 1/4 inch thick. When dissimilar metal components are used, consideration shall be given to prevention of galvanic corrosion.

5. STRUCTURAL DESIGN REQUIREMENTS. All equipment, including non-structural components and non-building structures as defined in ASCE 7, and their anchorage, shall be designed and detailed in accordance with the Meteorological and Seismic Design Criteria section.

6. LUBRICATION. Equipment shall be adequately lubricated by systems which require attention no more frequently than weekly during continuous operation.

Lubrication systems shall not require attention during startup or shutdown and shall not waste lubricants.

Lubricants of the types recommended by the equipment manufacturer shall be provided in sufficient quantities to fill all lubricant reservoirs and to replace all consumption during testing, startup, and operation prior to acceptance of equipment by Owner. Lubricants for equipment where the lubricants may come in contact with water before or during a potable water treatment process or with potable water, shall be food grade lubricants. This includes lubricants for equipment not normally in contact with water, but where accidental leakage of the lubricants may contaminate the water.

Lubrication facilities shall be convenient and accessible. Oil drains and fill openings shall be easily accessible from the normal operating area or platform. Drains shall allow for convenient collection of waste oil in containers from the normal operating area or platform without removing the unit from its normal installed position.

7. ELEVATION. The elevation of the site shall be as indicated in the Meteorological and Seismic Design Criteria section. All equipment furnished shall be designed to meet stipulated conditions and to operate satisfactorily at the specified elevation.

8. ELECTRIC MOTORS. Unless otherwise specified, motors furnished with equipment shall meet the requirements specified in Common Motor Requirements for Process Equipment section or specified in specific equipment sections.

9. DRIVE UNITS. The nominal input horsepower rating of each gear or speed reducer shall be at least equal to the nameplate horsepower of the drive motor. Drive units shall be designed for 24 hour continuous service.

9.01. Gearmotors. The use of gearmotors sharing an integral housing or cutgears into the motor output shaft, or that require removal of lubricant from the gear reducer to change out the motor will not be acceptable.

9.02. Gear Reducers. Each gear reducer shall be a totally enclosed unit with oil or grease lubricated, rolling element, antifriction bearings throughout.

Unless superseded by individual specification requirements each helical, spiral bevel, combination bevel-helical, and worm gear reducers shall have a service factor of at least 1.50 based on the nameplate horsepower of the drive motor. Cycloidal gear reducers shall have a service factor of at least 2.0 based on the nameplate horsepower of the drive motor. Shaft-mounted and flange-mounted gear reducers shall be rated AGMA Class III. Helical gear reducers shall have a gear strength rating to catalog rating of 1.5. Each gear reducer shall be designed

and manufactured in compliance with applicable most current AGMA standards, except the L_{10} bearing life shall be 200, 000 hours.

The thermal horsepower rating of each unit shall equal or exceed the nameplate horsepower of the drive motor. During continuous operation, the maximum sump oil temperature shall not rise more than 100°F above the ambient air temperature in the vicinity of the unit and shall not exceed 200°F.

Each grease lubricated bearing shall be installed in a bearing housing designed to facilitate periodic regreasing of the bearing by means of a manually operated grease gun. Each bearing housing shall be designed to evenly distribute new grease, to properly dispose of old grease, and to prevent overgreasing of the bearing. The use of permanently sealed, grease lubricated bearings will not be acceptable in large sized reducers. In small reducers, similar to basin equipment, permanently sealed grease lubricated bearings rated L_{10} 200,000 hour life may be provided at the manufacturer's option. An internal or external oil pump and appurtenances shall be provided if required to properly lubricate oil lubricated bearings. A dipstick or a sight glass arranged to permit visual inspection of lubricant level shall be provided on each unit.

Gear reducers which require the removal of parts or the periodic disassembly of the unit for cleaning and manual regreasing of bearings will not be acceptable.

Certification shall be furnished by the gear reducer manufacturer indicating that the intended application of each unit has been reviewed in detail by the manufacturer and that the unit provided is fully compatible with the conditions of installation and service.

9.03. Adjustable Speed Drives. Each mechanical adjustable speed drive shall have a service factor of at least 1.75 at maximum speed based on the nameplate horsepower of the drive motor. A spare belt shall be provided with each adjustable speed drive unit employing a belt for speed change. Unless specifically permitted by the detailed equipment specifications, bracket type mounting will not be acceptable for variable speed drives.

9.04. V-Belt Drives. Each V-belt drive shall include a sliding base or other suitable tension adjustment. V-belt drives shall have a service factor of at least 1.75 at maximum speed based on the nameplate horsepower of the drive motor.

10. SAFETY GUARDS. All belt or chain drives, fan blades, couplings, and other moving or rotating parts shall be covered on all sides by a safety guard. Safety guards shall be fabricated from 16 USS gage thick or thicker galvanized, aluminum-clad sheet steel, or stainless sheet steel or from 1/2 inch mesh galvanized expanded metal, or pultrusion molded UV resistant materials. Each safety guard shall be reinforced or shaped to provide suitable strength to prevent vibration and deflection and shall comply with OSHA. Each guard shall be

designed for easy installation and removal. All necessary supports and accessories shall be provided for each guard. Supports and accessories, including bolts, shall be galvanized. All safety guards in outdoor locations shall be designed to prevent the entrance of rain and dripping water.

11. ANCHOR BOLTS. Equipment suppliers shall design and detail suitable anchor bolts for each item of equipment. Anchor bolts shall be designed for all operating conditions of the equipment, including wind and seismic loadings when applicable. Wind and seismic loads shall be as indicated in the Meteorological and Seismic Design Criteria section.

Requirements for anchor bolt type, material, and minimum diameter shall be as indicated in the Anchorage in Concrete and Masonry section.

Anchor bolts, together with templates or setting drawings, shall be delivered sufficiently early to permit setting the anchor bolts when the structural concrete or masonry grout is placed.

Unless otherwise indicated or specified, anchor bolts for items of equipment mounted on baseplates shall be long enough to permit 1-1/2 inches of grout beneath the baseplate and to provide adequate anchorage into structural concrete.

12. EQUIPMENT BASES. Unless otherwise indicated or specified, all equipment shall be installed on concrete bases at least 6 inches high. Cast iron or welded steel baseplates shall be provided for pumps, compressors, and other equipment. Each unit and its drive assembly shall be supported on a single baseplate of neat design. Baseplates shall have pads for anchoring all components, and adequate grout holes. Baseplates for pumps shall have a means for collecting leakage and a threaded drain connection. Baseplates shall be anchored to the concrete base with suitable anchor bolts and the space beneath filled with grout as specified in the Grouting section.

13. SPECIAL TOOLS AND ACCESSORIES. Equipment requiring periodic repair and adjustment shall be furnished complete with all special tools, instruments, and accessories required for proper maintenance. Equipment requiring special devices for lifting or handling shall be furnished complete with those devices.

14. SHOP PAINTING. All iron and steel surfaces of the equipment shall be protected with suitable protective coatings applied in the shop. Surfaces of the equipment that will be inaccessible after assembly shall be protected for the life of the equipment. Coatings shall be suitable for the environment where the equipment is installed. Exposed surfaces shall be finished, thoroughly cleaned, and filled as necessary to provide a smooth, uniform base for painting. Electric motors, speed reducers, starters, and other self-contained or enclosed

components shall be shop primed or finished with an epoxy or polyurethane enamel or universal type primer suitable for top coating in the field with a universal primer and aliphatic polyurethane system.

Surfaces to be coated after installation shall be prepared for painting as recommended by the paint manufacturer for the intended service, and then shop painted with one or more coats of a universal primer.

Machined, polished, and nonferrous surfaces which are not to be painted shall be coated with rust-preventive compound as recommended by the equipment manufacturer.

15. PREPARATION FOR SHIPMENT. Equipment shall be prepared for shipment as specified in the Product Delivery Requirements section.

16. STORAGE. Handling and storage of equipment shall be as specified in the Product Storage and Handling Requirements section.

17. INSTALLATION AND OPERATION. Installation and operation shall be as specified in respective equipment sections and the Startup Requirements section.

18. OBSERVATION OF PERFORMANCE TESTS. Where the Specifications require the presence of Engineer, initial tests shall be observed or witnessed by Engineer. Owner shall be reimbursed by Contractor for all costs of subsequent visits by Engineer to witness or observe incomplete tests, retesting, or subsequent tests.

19. PROGRAMMING SOFTWARE. Programming software shall be provided for any equipment which includes a programmable logic controller (PLC) or other digital controller that is user-programmable. The software shall be suitable for loading and running on a laptop personal computer operating with a Windows-based operating system. A copy of the manufacturer's original operating logic program shall be provided for use in maintaining and troubleshooting the equipment. Where multiple pieces of equipment, from the same or different vendors, use the same programming software, only one copy of the software need be provided.

End of Section

Section 01611

METEOROLOGICAL AND SEISMIC DESIGN CRITERIA

1. SCOPE. Buildings, non-structural components and non-building structures shall be designed in accordance with this section. In the event of conflict with requirements in other sections, the more stringent criteria shall be followed.

2. DESIGN CRITERIA. Buildings and, non-building structures including anchorage of such items, shall be designed in accordance with the following criteria.

General Design Data:

Building code and references

Florida Building Code, 6th Edition (2017)

IBC 2015 as amended by the Florida Bldg Code,

ASCE 7-10 “Minimum Design Loads for Buildings and Other Structures”,

AISC 360 “Specification for Structural Steel Buildings”,

AISC 341 “Seismic Provisions for Structural Steel Buildings”

Site elevation, above mean sea level (ft)	0.60’
Design flood elevation, DFE (ft)	8.00’
Design groundwater elevation (ft)	-1.00’

Wind Design Data:

Ultimate design wind speed, V_{ult} (mph)	200
Nominal design wind speed, V_{asd} (mph)	155
Exposure category	D
Risk Category	III
Building enclosure classification	Enclosed

Snow Design Data:

Ground snow load, P_g (psf)	Zero

Seismic Design Data

Mapped MCE short period spectral response acceleration, S_S	0.021
Mapped MCE one second period spectral response acceleration, S_1	0.013
Risk Category	III
Seismic Design Category	A
Non-Structural Components Seismic Design Category	Exempt from seismic design

3. WIND ANCHORAGE. Equipment that is to be located outdoors shall have anchor bolts designed for the effects of wind forces, as determined in accordance with ASCE 7, Chapters 26-31. Design of anchorage into concrete shall be in accordance with ACI 318 Appendix D, shall consider concrete to be cracked, and shall not include the strengthening effects of supplementary reinforcement or anchor reinforcement unless approved by the Engineer. Post-installed anchors into concrete may be used only when approved by Engineer, and shall be designed in accordance with the anchor manufacturer's research report. Shop drawings shall include full anchor bolt details, and shall be sealed by a professional engineer licensed in the state of the project. Calculations shall be furnished when requested by Engineer.

4. SEISMIC DESIGN.

4-1. General. Structural systems shall provide continuous load paths, with adequate strength and stiffness to transfer all seismic forces from the point of application to the point of final resistance.

4-2. Pre-Engineered Buildings. Pre-engineered buildings shall have sufficient strength and ductility to resist the specified seismic effects defined for buildings and shall meet all of the design, proportioning, detailing, inspection, and quality assurance provisions of the specified building code.

"W" for buildings shall include the total dead load, the total operating weight of permanent equipment and the effective contents of vessels, and applicable portions of other loads, as required by the specified building code.

4-3. Non-Structural Components. Non-structural components such as architectural, mechanical, and electrical items that are permanently attached to and supported by a structure but are not part of the structural system, are exempt from seismic design as indicated in Chapter 11 of ASCE 7.

4-4. Anchorage. Design of anchorage into concrete shall be in accordance with ACI 318 Appendix D, shall consider concrete to be cracked, and shall not include the strengthening effects of supplementary reinforcement or anchor reinforcement unless approved by Engineer. Post-installed anchors into concrete may be used only when approved by Engineer, and shall be designed in accordance with the anchor manufacturer's research report.

Components shall be attached so that forces are transferred to the structural system. All structural attachments shall be bolted, welded, or otherwise positively fastened. Frictional resistance due to gravity shall not be considered in evaluating the required resistance to seismic forces.

4-5. Non-Building Structures. Non-building structures are the items described as such in Chapter 15 of ASCE 7 including the Pumping Station.

Design of non-building structures shall be in accordance with all applicable provisions of ASCE 7, Chapter 15. Liquid containing structures shall also be subject to the provisions of ACI 350 and 350.3 with a low level of seismic risk as outlined in ACI 350, Article 21.2.1.3. "W" shall include the total dead load and shall also include all normal operating contents of tanks and piping.

Non-building structures shall provide sufficient strength and ductility to resist the specified minimum seismic effects, and shall meet all of the design, proportioning, detailing, inspection, and quality assurance provisions of the specified building code and other referenced codes. Non-building structures shall be designed to be operable during and following a design level seismic event, without collapsing, breaking away from supports, creating an ignition hazard, or releasing any contents.

4-6. Submittals. The construction documents shall be submitted in accordance with the Submittal Procedures section.

End of Section

Section 01612

PRODUCT DELIVERY REQUIREMENTS

1. SCOPE. This section covers packaging and shipping of materials and equipment.

2. PREPARATION FOR SHIPMENT. All equipment shall be suitably packaged to facilitate handling and to protect against damage during transit and storage. All equipment shall be boxed, crated, or otherwise completely enclosed and protected during shipment, handling, and storage. All equipment shall be protected from exposure to the elements and shall be kept dry at all times.

Painted and coated surfaces shall be protected against impact, abrasion, discoloration, and other damage. Painted and coated surfaces which are damaged prior to acceptance of equipment shall be repainted to the satisfaction of Engineer.

Grease and lubricating oil shall be applied to all bearings and similar items.

3. SHIPPING. Before shipping each item of equipment shall be tagged or marked as identified in the delivery schedule or on the Shop Drawings. Complete packing lists and bills of material shall be included with each shipment.

End of Section

Section 01614

PRODUCT STORAGE AND HANDLING REQUIREMENTS

1. SCOPE. This section covers delivery, storage, and handling of materials and equipment.

2. DELIVERY. Contractor shall bear the responsibility for delivery of equipment, spare parts, special tools, and materials to the site and shall comply with the requirements specified herein and shall provide required information concerning the shipment and delivery of the materials specified in this Contract. These requirements also apply to any subsuppliers making direct shipments to the Site.

Contractor shall, either directly or through contractual arrangements with others, accept responsibility for the safe handling and protection of the equipment and materials furnished under this Contract before and after receipt at the port of entry. Acceptance of the equipment shall be made after it is installed, tested, placed in operation and found to comply with all the specified requirements.

All items shall be checked against packing lists immediately on delivery to the site for damage and for shortages. Damage and shortages shall be remedied with the minimum of delay.

Delivery of portions of the equipment in several individual shipments shall be subject to review of Engineer before shipment. When permitted, all such partial shipments shall be plainly marked to identify, to permit easy accumulation, and to facilitate eventual installation.

3. STORAGE. Upon delivery, all equipment and materials shall immediately be stored and protected until installed in the Work.

Stacked items shall be suitably protected from damage by spacers or load distributing supports that are safely arranged. No metalwork (miscellaneous steel shapes and reinforcing steel) shall be stored directly on the ground. Masonry products shall be handled and stored in a manner to hold breakage, chipping, cracking, and spalling to a minimum. Cement, lime, and similar products shall be stored off the ground on pallets and shall be covered and kept completely dry at all times. Pipe, fittings, and valves may be stored out of doors, but must be placed on wooden blocking. PVC pipe, geomembranes, plastic liner, and other plastic materials shall be stored off the ground on pallets and protected from direct sunlight.

Pumps, motors, electrical equipment, and all equipment with antifriction or sleeve bearings shall be stored in weathertight structures maintained at a temperature above 60°F. Electrical equipment, controls, and insulation shall be protected

against moisture and water damage. All space heaters furnished in equipment shall be connected and operated continuously.

Equipment having moving parts, such as gears, bearings, and seals, shall be stored fully lubricated with oil, grease, etc., unless otherwise instructed by the manufacturer. Manufacturer's storage instructions shall be carefully followed by Contractor.

When required by the equipment manufacturer, moving parts shall be rotated a minimum of twice a month to ensure proper lubrication and to avoid metal to metal "welding". Upon installation of the equipment, Contractor shall, at the discretion of Engineer, start the equipment at one-half load for an adequate period of time to ensure that the equipment does not deteriorate from lack of use.

When required by the equipment manufacturer, lubricants shall be changed upon completion of installation and as frequently as required thereafter during the period between installation and acceptance. New lubricants shall be put into the equipment by Contractor at the time of acceptance.

Equipment and materials shall not show any pitting, rust, decay, or other deleterious effects of storage when installed in the Work.

In addition to the protection specified for prolonged storage, the packaging of spare units and spare parts shall be for export packing and shall be suitable for long-term storage in a damp location. Each spare item shall be packed separately and shall be completely identified on the outside of the container.

4. HANDLING. Stored items shall be laid out to facilitate their retrieval for use in the Work. Care shall be taken when removing the equipment for use to ensure the precise piece of equipment is removed and that it is handled in a manner that does not damage the equipment.

During handling, carbon steel constructed material including chains, straps, and forks on lifting equipment shall not directly contact any equipment or material constructed of stainless steel. It shall be the Contractor's responsibility to correct any carbon steel contamination of stainless steel.

End of Section

Section 01615

EQUIPMENT AND VALVE IDENTIFICATION

PART 1 – GENERAL

1-1. SCOPE. This section covers the furnishing and installation of nameplates and tags for identification of equipment, valves, panels, and instruments.

1-2. GENERAL. Except as otherwise specified in equipment, valve, and instrumentation sections, nameplates and tags shall be as specified herein. Nameplates or tags shall be provided for all equipment, valves, operator interfaces, control and electrical panels, cabinets, instruments, and instrument racks that have been named and/or tagged on the Drawings.

1-3. SUBMITTALS. Drawings and data shall be submitted in accordance with the requirements of the Submittals Procedures section for each type of tag provided including materials, colors, sizes, letter sizes, and installation instructions.

PART 2 - PRODUCTS

2-1. EQUIPMENT NUMBER PLATES. All equipment tagged on the drawings, except for submerged equipment shall be provided with number plates bearing the equipment tag number identified on the Drawings. Number plates shall be bevelled, 1/8th inch thick laminated black phenolic plastic engraving stock with white core. Lettering on number plates shall be capitalized block letters ¾ inch high. Number plate height shall be twice the letter height. Number plate length shall be as needed, with suitable margins all around. Lettering shall be placed in one row where practicable; however, where necessary due to excessive length, lettering shall be placed on more than one row and centered.

Number plates shall be attached with stainless steel panhead screws, rivets, or drive screws.

When a number plate cannot be installed due to the physical size, space, or mounting surface geometry of the equipment, the Contractor shall provide a 12 gauge stainless steel tag with engraved or imprinted equipment tag number. Lettering on tags shall be ¼ inch high. Tags shall be rectangular with smooth edges, and shall be fastened to the equipment with stainless steel mechanical fasteners or with a stainless steel chain.

2-2. EQUIPMENT INFORMATION PLATES. Equipment shall be provided with engraved or stamped equipment information plates securely affixed with mechanical fasteners to the equipment in an accessible and visible location. Equipment information plates shall be in addition to the number plates specified.

Equipment information plates shall indicate the manufacturer's name, address, product name, catalog number, serial number, capacity, operating and power characteristics, labels of tested compliances, and any other pertinent design data. Equipment information plates listing the distributing agent only will not be acceptable.

2-3. VALVE AND GATE TAGS.

2-3.01. Temporary Tags. Not Used.

2-3.02. Permanent Tags. All valves and gates, except buried or submerged valves, that have been assigned a number on the Drawings or in the valve or gate schedule, shall be provided with a permanent number plate. Tags shall be permanently attached to valves and gates with stainless steel mechanical fasteners or with stainless steel chains. Numerals shall be ¾ inch high and shall be black baked enamel on an anodized aluminum plate.

All buried valves shall be tagged with a brass plate cast into a 6-inch by 6 inch concrete pad at grade next to the valve box. The valve number shall be engraved in the brass plate with lettering and numerals at least 1 inch high.

2-4. PANEL NAMEPLATES. Nameplates shall be provided on the face of each panel and cabinet. Panel identification nameplates shall be mounted at the top of the panel shall include the panel descriptive name and tag number as indicated on the Drawings, in two or three lines of text. Lettering shall be ¾ inch high.

Nameplates for devices mounted on or in the panel shall be inscribed with the text as indicated on the Drawings. Where nameplate information is not indicated on the Drawings, inscriptions shall be in accordance with information in the supplier's submittal drawings as guided by information in the relevant specification section. Panel device nameplates shall have engraved letters 3/16 inch high.

Nameplate material and size shall be as specified above for equipment number plates. Nameplates shall be secured to the panel with stainless steel panhead screws.

2-5. INSTRUMENT TAGS.

2-5.01. Temporary Tags. Not used.

2-5.02. Permanent Tags. Instruments shall be tagged with the instrument tag number indicated on the Drawings. Tags shall be 12 gauge stainless steel with engraved or imprinted symbols. Lettering on tags shall be ¼ inch high. Tags

shall be rectangular with smooth edges, and shall be fastened to the instrument with stainless steel mechanical fasteners or with a stainless steel chain.

PART 3 – EXECUTION. Not used.

End of Section

Section 01620

EQUIPMENT SCHEDULE

1. SCOPE. This section consists of an equipment schedule for items for which a basic level of manufacturer's field services or operation and maintenance manuals are required, but not covered in other sections. When other sections indicate that manufacturer’s field services and operation and maintenance manuals are required, the requirements shall be as specified in the other sections.

Specific requirements for manufacturer's field services are covered in the Quality Control section and the equipment specifications.

Specific requirements for operation and maintenance manuals are covered in the Submittals Procedures section and the equipment specifications.

2. SCHEDULE. Manufacturer's field services, including equipment installation checks and training, and operation and maintenance manuals shall be provided for the items of equipment indicated in the following schedule:

Spec Section	Type of Equipment	Mfr's. Field Services	O&M Manual
02725	Stormwater Treatment Devices	X	X
11150	Submersible Pumps	X	X
11910	Engine-Generator	X	X
13500	Instrumentation and Control System		X

End of Section

Section 01650

STARTUP REQUIREMENTS

1. SCOPE. This section includes the requirements for startup and testing all items of equipment and systems that form a part of this Contract. The purpose of this section is to define the requirements for bringing individual equipment, systems, and facilities online and for proving proper operation and performance of that Work. Contractor is required to develop, submit, and maintain detailed plans, including designation of management and staff, for these activities as specified herein. Additional requirements such as training are specified in other sections.

The Contractor is also required to startup, test, and commission equipment procured by the Owner and assigned to the Contractor. The Contractor shall refer to the Procurement Documents furnished by Owner and coordinate with the Supplier of the equipment regarding startup and testing activities.

The startup, testing, and commissioning services referenced or specified herein include the following:

Startup and Testing
Startup checks
Functional testing
Functional acceptance testing
Operation acceptance testing

1.01. Definitions. Startup and Testing is the transitional phase between completion of construction and start of commissioning and includes the following:

- Pre-Startup Activities and Checks - Inspections, tests and other activities necessary to determine that equipment, systems and subsystems have been properly manufactured and installed. Pre-startup activities shall include an audit of all factory testing of equipment and compiling the results for comparison to startup and commissioning testing.

- Functional Testing – Initial limited operation of equipment, to demonstrate capability of installed components to perform their intended functions, respond to controls, and safely interface with external systems, followed by operation of individual systems in manual and automatic mode to test full functionality of individual systems.

- Operational acceptance testing - Continuous testing of complete the treatment processes under specified operating conditions in accordance

with the technical Specifications and applicable regulations to demonstrate proper performance of the facility.

2. GENERAL. The Contractor shall be responsible for and furnish all labor, materials, instruments, incidentals, and equipment required for startup, testing, and commissioning. Temporary facilities required to carry out the specified testing, including temporary pipe, pumps, and other appurtenances, shall be furnished and installed, and removed when no longer required for startup, testing, and commissioning. Refer to the Temporary Facilities section for requirements concerning water and power for startup and testing. Chemicals required for startup and testing shall be provided by the Contractor except as otherwise specified herein. Wastewater, including treated or test water that cannot be delivered to the system for any reason, shall be disposed of at the expense of the Contractor, in a manner acceptable to the Owner, and in accordance with all laws, regulations**,** and permits.

Startup and testing shall be conducted during normal working hours during the workweek of Monday through Friday, unless otherwise approved by the Owner. Where continuous long-term testing is required, testing may continue over the weekends and holidays with prior approval from the Owner.

2.01. Constraints. Startup and testing shall be conducted in a manner that does not compromise the quality of treated products released from the facility.

The minimum constraints for startup and testing include the following:

Environmental Constraints

Permitting Regulations

3. STARTUP MANAGER, STARTUP TEAM, AND MANUFACTURER'S FIELD SERVICES REPRESENTATIVES. The Contractor shall maintain a dedicated startup team led by a startup manager. The individual to be designated as startup manager shall be identified within 45 days of the Notice to Proceed and will be reviewed by Owner and Engineer. Once accepted, the Contractor shall not change the startup manager throughout the full period of performance of the Work without written permission of the Owner. Once engaged in the Project, the startup manager shall attend regular construction progress meetings. No startup activities shall begin until the startup manager has arrived at the jobsite.

The startup manager shall be on Site full time at least 30 days prior to any field startup and testing activities and shall remain on site until all startup, testing, and commissioning activities are complete.

3.01. Startup Manager. The startup manager shall be a startup and testing expert with a minimum of 5 years of experience starting up equipment and systems of similar type, size, capacity, and complexity to the equipment and systems included in this Project. The startup manager shall have the necessary experience to fully understand all startup requirements, to manage the Contractor's resources providing the startup services, and to prepare all startup documentation, as specified. The startup manager's assigned duties and responsibilities are those specifically related to planning, supervising, and executing startup activities and shall include, but shall not be limited to the following:

Coordinating all testing and startup activities.

Preparing all startup and field testing plans, documentation, and forms.

Liaising between the Contractor, Engineer, and Owner for all startup and testing activities.

Developing a comprehensive schedule for all startup activities and providing regular schedule updates. The startup and testing schedule shall be incorporated into the Progress Schedule.

Scheduling and leading startup, testing, and commissioning planning meetings.

Conducting coordination meetings during startup, testing, and commissioning at least weekly.

Coordinating manufacturers' services and their certification of proper installation and/or operation of equipment as required by the Specifications.

Overseeing and administering all startup, testing, and commissioning activities, including either direct participation in the activities and/or oversight and monitoring of activities. It shall be the startup manager's responsibility to assure that all tests have been completed in accordance with accepted testing procedures.

Ensuring readiness for and coordinating maintenance, repair, and adjustment of equipment and systems during startup testing, and commissioning.

Conducting or overseeing pre-test checks to ensure readiness for testing. Verify all piping hydrostatic testing and flushing has been completed prior to field testing connected equipment.

Ensuring all testing equipment is in proper working order and has been calibrated to appropriate standards.

Developing safe work policies and procedures including lockout/tagout procedures and personal protective equipment policies, that will be followed during all field startup and testing activities. At a minimum the Contractor shall comply with OSHA and the Owner's established safety guidelines. It shall be the startup manager's responsibility to assure all safety procedures are followed at all times.

Reviewing and approving all equipment training sessions prior to submission to Engineer, to assure that the training is compliant with the requirements of the Specifications and includes all applicable operation, maintenance, safety, functional, performance, and startup and testing information.

Organizing teams made up of qualified representatives of Suppliers, Subcontractors, and others, as appropriate, to efficiently and expeditiously startup and test the equipment and systems installed and constructed under this Contract. The objective of this program shall be to demonstrate to the Engineer and Owner that the structures, systems, and equipment constructed and installed under this Contract meet all performance requirements and the facility is ready for operation as intended. In addition, the testing program shall produce baseline operating conditions for the Owner to use in a preventive maintenance program.

Ensuring the development and maintenance of records documenting all startup, testing, and commissioning activity. The records shall be organized by major process system into organized files/binders and turned over to the Owner prior to applying for final payment. Testing records shall be accessible to the Engineer and Owner at all times to allow monitoring of the progress.

Ensuring the startup team is equipped and ready to make emergency repairs and adjustments to equipment installed and modified as part of the Project.

Scheduling and conducting a one day workshop with the Owner and Engineer to resolve submittal review comments to the Contractor's startup, testing, and commissioning plan submittal.

Notifying the Owner and all respective equipment manufacturers at least 21 days prior to the date when each equipment system is scheduled for pre-startup activities and checks.

Organize International Electrical Testing Association (NETA) acceptance testing in accordance with the Electrical Equipment Installation section.

3.02. Startup Team. The startup team shall include the startup manager and all staff deemed necessary for successful completion of startup, testing, and commissioning. This will typically include engineers, major equipment vendors, operators, and representatives from the Instrumentation and Control System Supplier. Additional trade representatives may be included as project requirements dictate.

3.03. Manufacturer's Field Services Representative. The manufacturers shall provide a technically qualified field-service representative for the installation, startup, and testing of equipment furnished, as specified in the equipment sections. The manufacturer shall submit qualifications and experience records for all key personnel to be involved in startup activities.

The manufacturer's field services representative shall be employed full-time in installation, startup, and testing of similar equipment and facilities and work directly for the manufacturer. The representative shall have conducted startup activities similar to those required herein on at least two other projects of similar complexity. The Owner or Engineer shall have the right to reject the manufacturer's field services representative at any time, for immediate replacement by the manufacturer, if the accepted qualifications are not representative of the actual experience or abilities of the representative, as determined by the Owner or Engineer.

4. SUBMITTALS. Contractor shall submit the following information in accordance with the requirements of the Submittals Procedures section.

Startup manager's qualifications and past project experience including contact names, addresses and current telephone numbers of owner representatives that can be used to verify the accuracy of the information. Submittal shall be made at the preconstruction conference.

Manufacturers' field services representative's qualifications and past project experience including contact names, addresses and current telephone numbers that can be used to verify the accuracy of the information. Qualification submittals shall be made 3 weeks before the manufacturer's representative is scheduled to be on Site.

Manufacturer's certification of proper installation of all equipment as specified in the equipment sections.

Equipment and system startup, testing, and commissioning plans and schedule in accordance with the requirements of this section. Startup manager shall coordinate with Subcontractors and include their information in the startup and testing plan.

Unless otherwise specified in the equipment sections, preliminary copies of field calibration results. Submittal shall be made prior to the start of each test for associated systems.

Daily logs.

5. STARTUP AND TESTING REQUIREMENTS.

5.01. Startup Checks**.** Prior to field testing of all equipment, the Contractor shall perform the following:

Inspect and clean equipment, devices, and connected piping so they are free of foreign material.

Lubricate equipment in accordance with manufacturer's instructions.

Turn rotating equipment by hand.

Open and close valves by hand and operate other devices to check for binding, interference, or improper functioning.

Test and commission related electrical system components in accordance with the requirements specified in the Electrical and the Electrical Equipment Installation sections.

Calibrate all instruments associated with the equipment.

Check for proper rotation, adjustment, alignment, balancing, mechanical and electrical connections, and any other conditions that may damage or impair equipment from functioning properly.

Inspect and verify proper anchorage.

Obtain manufacturer's certification of proper installation where specified in the equipment sections.

All equipment shall be confirmed ready to test by the Engineer based on the following**:**

Acceptance of Contractor's startup and testing plan.

Notification in writing by the startup manager that each piece of equipment or system is ready for testing.

Verification by the Engineer and Owner that all lubricants, tools, maintenance equipment, spare parts and approved equipment operation and maintenance manuals have been furnished as specified.

Cleanliness of equipment, devices, and connected work.

Adequate completion of work adjacent to or interfacing with equipment to be tested.

Confirmation of manufacturer's representative's availability to assist with testing, where specified, and satisfactory fulfillment of all other manufacturers' responsibilities as specified.

Engineer's inspection of all related civil construction, mechanical, and electrical installations.

Confirmation of completion of acceptable testing of all adjacent piping, duct work and other affected Work.

5.02. Functional Testing. All startup checks shall be completed prior to functional testing. Functional testing shall be in accordance with relevant standards and in accordance with instructions of the manufacturers.

Ancillary and/or temporary facilities necessary to recycle, control, or discharge water, air, chemical, or gas from facilities being tested, shall be operational.

Functional testing shall include the functional operation of each piece of equipment. All moving parts of equipment and machinery shall be tested and adjusted so that they move freely and function satisfactorily. Functional testing shall demonstrate correct operation of all hardwired interlocks and controls.

Functional testing of power actuated valves shall include at least 4 full open-close operations. Testing shall demonstrate the maximum number of operations per hour as recommended by the actuator manufacturer without overheating.

Once functional testing of individual pieces of equipment is completed, individual systems functional testing shall commence. Individual system functional testing shall include startup of the complete system of mechanical, electrical, and instrumentation and control equipment as a functional process system. Field inspection prior to startup as specified in the Instrumentation and Control System section, other testing by the Instrumentation and Control System Supplier

required to verify readiness for automatic operation of the individual system, shall be completed before commencement of individual system functional testing.

Individual system functional testing shall include operation in manual and automatic modes, startup operation, and shutdown in normal and emergency modes. Individual systems shall be tested over their entire operating range and for sufficient time to demonstrate the intended functionality of each piece of equipment and the system. If any part of a system shows evidence of unsatisfactory or improper operation during the test period, correction or repairs shall be made and the functional testing shall be repeated until satisfactory results are obtained.

Functional testing of all process and pumping equipment and drive motors, including auxiliary equipment, shall be n accordance with the appropriate and approved test codes, such as those specified by the American Society of Mechanical Engineers, Hydraulic Institute Standards, and IEEE.

Qualified personnel from the electrical and mechanical trades responsible for installation of the equipment, shall be available during functional testing involving electrically operated equipment. Where appropriate, a representative of the Instrumentation and Control System Supplier shall also be available.

5.03. Functional Acceptance Testing. Once the Contractor's functional testing is complete and associated documentation has been submitted and accepted by the Engineer, the Contractor shall conduct functional acceptance testing of each complete process system, to demonstrate individual systems meet the specified requirements. Acceptance testing shall include the successful demonstration of all operating functions and conditions that are specified for the equipment, system, and controls. The manufacturer's representative shall be on Site during acceptance testing when specified in the equipment specifications.

The Functional Acceptance Testing shall include the following submissions prior to commencement:

Prerequisite checklist, to be acknowledged by the Engineer prior to initiating the test, that demonstrates that all testing and other Work required to be completed prior to the test is complete.

Listing of Owner's personnel necessary to operate the system and conduct any related monitoring of performance.

A listing of Contractor's personnel designated to supervise and direct the Owner's operators as required herein.

Listing of standby personnel, equipment, and materials that will be available if needed during the test period.

Step-by-step procedures for operation of the facility showing how local and remote control of equipment will be demonstrated.

Description of all data and other information to be reported in support of the completed test. Include any blank data logs that may be used for recording results.

Descriptions of all necessary calculations that must be completed to verify the specified results are being achieved, including formulas.

Blank sign-off form for the test acknowledging the Contractor's, Engineer's, Owner's, and the equipment manufacturer's acceptance of the test.

Contractor shall provide Owner and Engineer 14 days notice prior to testing of any individual system.

Individual system acceptance testing shall continue for 48 hours without interruption for each system, and all parts shall operate satisfactorily in all respects under a range of conditions to simulate the full operating range of the equipment or system. If there are multiple parallel components or trains, then the testing duration will be 48 hours for each individual train.

If any part of a system shows evidence of unsatisfactory or improper operation during the testing period, correction or repairs shall be made and the test repeated until the test is successfully completed. Testing interrupted by power failure will not be required to be repeated, but the test shall be continued upon restoration of power and extended to the specified duration at no additional cost to the Owner.

During this testing period the Contractor shall operate all equipment.

6. COMMISSIONING. Not used.

7. OPERATION ACCEPTANCE TESTING. At the completion of the Individual System Acceptance Tests and when the overall process has stabilized sufficiently as determined by the Engineer, operational acceptance testing of the complete facility constructed or modified under the Contract shall be conducted. Operational acceptance testing shall not be conducted concurrently with other individual system acceptance or performance tests.

The test shall run at least ___ days with the entire facility operating in the intended manner. The test shall demonstrate to the satisfaction of the Engineer

that the facilities are complete and meet all specified requirements and can be continuously operated for their full intended function. During the testing period, the plant shall operate under all control modes, including manual, remote-manual, and automatic. The Owner's staff shall operate the facility.

Duty and standby equipment shall be alternated so that all equipment is selected for duty operation for a period of at least 2 days during the test. Unless indicated otherwise, if any item malfunctions or a defect is found during the test, the item shall be repaired and the test either extended a duration to be determined by the Engineer and Owner depending on the severity of the malfunction or defect, or restarted at time zero with no credit given for the operating time before the malfunction or the defect was found. Malfunctions or defects meeting both of the following conditions may, at the Engineer's discretion, be considered grounds for not requiring restarting the test at time zero:

1. Malfunctions that do not cause an interruption to the operation of the facility because standby equipment can be placed into service.

2. Malfunctions that are corrected within four (4) hours of the time the malfunction is detected. Correction of a malfunction or defect will be considered complete only after the affected equipment is placed back into service and is operating as intended for a continuous period of 24 hours without additional failure.

All malfunctions, defects in materials or workmanship, or other flaws, which appear during this test period, shall be immediately corrected by the Contractor ,. If spare parts from the specified spare parts inventory are used to make repairs, they shall be replaced immediately and must be replaced prior to application for final payment.

The Contractor shall supply all oil, grease, lubricants, and ancillary equipment required for operational acceptance testing.

All plant control system coordination issues shall be resolved and data trending requirements shall be functional during this period.

During operational acceptance testing, effluent meeting permit requirements as determined by the Owner, will be discharged to the outfall.

8. PERFORMANCE TESTING. Not used.

9. STARTUP SCHEDULE AND STARTUP AND COMMISSIONING PLANS. Plans and schedules shall be developed to facilitate coordinated and efficient startup, testing, and commissioning of the Project equipment and systems.

The Contractor shall submit a startup, testing, and commissioning plan and schedule to the Engineer no later than 90 calendar days prior to the commencement of startup and testing. A minimum of 21 days shall be allowed for review by Engineer and Owner. The schedule and plan must be accepted a minimum of 30 days prior to commencement of startup and testing. The schedule and plan shall include sections for startup checks, functional testing, functional acceptance testing, and commissioning.

Forms for startup and testing shall include identification of equipment or system, startup/test date, nature of startup/test, startup/test objectives, startup/test prerequisites, startup/test results, instruments employed for the startup/test and signature spaces for the Engineer's witness (where applicable) and the Contractor's startup manager.

9.01 Startup Schedule. A startup schedule that provides an overall sequence and duration for all startup, testing and commissioning activities, shall be prepared and maintained. This schedule shall serve as a companion to but shall not be a replacement for the startup plan. The startup schedule described in this section shall be integrated into the overall Progress Schedule and shall be prepared as specified for the Progress Schedule in the Construction Progress Schedule section. The Startup Schedule shall be updated weekly to during the startup, testing, and commissioning period.

9.02. Startup Plan. The Startup Plan shall include the following:

Introduction with a narrative description of the overall testing and startup program. The description shall include all contractual or regulatory treatment requirements to be demonstrated.

A summary of the objectives and approach for startup checks, functional testing, functional acceptance testing, and commissioning.

List of the instruments, equipment, and systems that will undergo startup and testing with references to the appropriate PIDs, equipment tags/identification numbers, Specification number and standards for testing procedures.

Schedule for startup and field testing for each instrument, piece of equipment (including redundant equipment), and system.

Safety and emergency response plan including a list of emergency and non-emergency contacts (email and phone).

Organization chart for Contractor's startup and testing personnel with assigned responsibilities for each.

Startup and testing record keeping plan.

Plan for reuse and disposal of water/wastewater from startup, testing, commissioning including information on any required regulatory permits/approvals.

Description of temporary facilities that will be provided.

List of chemicals to be provided by the Owner.

Within 7 to 14 days of initial submittal of the startup plan, the Contractor shall schedule a workshop with the Owner and Engineer to present the plan. The Contactor shall submit minutes of the workshop, including action items and a schedule for updating the startup plan, to the Engineer within 3 days of the workshop.

Individual plans for each phase of startup, testing, and commissioning can be assembled as chapters in the startup plan or submitted as individual documents but should be correlated to ensure there is not disagreement between chapters or separate documents.

9.02.01 Startup Checks Plan. The startup checks plan shall be subdivided into plans for each system and major component. Each system/major component plan shall include but not be limited to the following:

Identification of information for each component or piece of equipment to be inspected as part of the system. All applicable tag numbers shall be included.

Specific activities to be completed on each component, piece of equipment, or system as required to demonstrate proper installation and connection.

A tracking checklist of prerequisites for the checks and each step of the checking procedure, including any temporary facilities or utility requirements.

Listing of manufacturer's representative(s) to be on site during the check.

Sign off forms for the Contractor's startup manager.

9.02.02 Functional Testing and Functional Acceptance Testing Plans. The functional testing plan shall include procedures and reporting for functional testing. The functional testing plan shall be subdivided into testing plans for each system. Each system test plan shall include but not be limited to the following:

A narrative description of the purpose and goals of the test for each component, piece of equipment, or system, which should include all activities (including those required by vendors/suppliers) necessary to verify proper equipment and system functionality.

Identification of each component or piece of equipment to be tested as part of the system. All applicable tag numbers shall be included.

Schedule and duration for the tests.

Prerequisites for each test, including any temporary facilities or utility requirements.

Pass/fail criteria for the test.

A checklist for tracking testing progress which includes prerequisites for the test and each step of the testing procedure. The check list shall include specified performance criteria that are to be met.

A description of test apparatus required to conduct the test.

Identification of all temporary facilities and chemicals require during startup.

Listing of manufacturer's representative(s) to be on site during the test.

Certificates of proper installation, as applicable to the test.

Step-by-step detailed procedure of the test. The level of detail shall be sufficient for a witness to be able to follow the steps during the test and be confident that the test is being performed as planned. All steps required to proceed through the test in an orderly manner are considered significant and each of these steps shall be included in the procedure.

Copies of the data recording forms that will be used during the test.

Calculation methodologies to be used to evaluate the data and/or test criteria for the test.

Sample computations or analyses for the test with results in the same format as the final report. This item is intended to demonstrate how data collected will be used to generate final results. A sample shall be included for each type of computation required for the test and analysis of results.

Blank sign-off forms for the test acknowledging the startup manager's, Engineer's, Owner's, and equipment manufacturer's acceptance of the test where applicable.

10. REPORTS AND RECORDS. Records of all startup and testing shall be compiled by the Contractor and submitted to the Engineer. Prior to being submitted to the Engineer, the startup manager shall certify that the results recorded and the tested systems comply with the Contract requirements. Records shall include all documentation assembled for each piece of equipment or system involved in the startup and testing, including all certifications, forms, and check lists completed during the startup and test, and sign-off forms.

Records of all startup and testing shall be compiled as separate documents for each system tested, and shall be submitted within 48 hours of completion of the startup and testing for each system. Testing samples that require analysis periods greater than 48 hours shall be clearly defined in the startup plan but shall not preclude delivery of the balance of the records within the 48 hour timeframe.

The Contractor shall provide formal reporting and documentation of failures, malfunctions or defects, and repairs made during the startup and/or testing activities. A "System Problem Report" form is included at the end of this section, and shall be used by the Contractor to document problems that arise during these tests and their resolution. Records submitted shall include "System Problem Report" forms completed during testing.

SYSTEM PROBLEM REPORT

Project Name: Dennis Street Stormwater Improvement			
Test Name:			
Test Number:			
Problem Type: Hardware Software Documentation Unknown Other			
SYMPTOMS:	Time:	Date:	By:
Description:			
Can problem be reproduced at will? Y / N			
DIAGNOSIS:	Time:	Date:	By:
Description:			
CORRECTION:	Time:	Date:	By:
Description:			
FINAL SIGN OFF	Time:	Date:	By:

Section 01700

CLOSEOUT PROCEDURES

1. SUBSTANTIAL COMPLETION PROCEDURES. Procedures for achieving Substantial Completion on the Project shall be as indicated in the Division 00 Sections and as indicated below.

1.1 Contractor's List of Incomplete Items: Contractor shall prepare and submit a list of items to be completed and corrected (Contractor's punch list), indicating the value of each item on the list and reasons why the Work is incomplete.

1.2 Submittals Prior to Substantial Completion: Contractor shall complete the following a minimum of 10 days prior to requesting inspection for determining date of Substantial Completion.

- Certificates of Release: Obtain and submit releases from authorities having jurisdiction permitting Owner unrestricted use of the Work and access to services and utilities. Include occupancy permits, operating certificates, and similar releases.

- Submit closeout submittals specified in other Division 00 of Division 01 Sections, including project record documents, operation and maintenance manuals, damage or settlement surveys, property surveys, and similar final record information.

- Submit closeout submittals specified in individual Sections, including specific warranties, workmanship bonds, maintenance service agreements, final certifications, and similar documents.

- Submit maintenance material submittals specified in individual Sections, including tools, spare parts, extra materials, and similar items, and deliver to location designated by Engineer. Label with manufacturer's name and model number.

    - Schedule of Maintenance Material Items: Prepare and submit schedule of maintenance material submittal items, including name and quantity of each item and name and number of related Specification Section. Obtain Owner’s signature for receipt of submittals.

- Submit testing, adjusting, and balancing records.

- Submit sustainable design submittals not previously submitted.

- Submit changeover information related to Owner's occupancy, use, operation, and maintenance.

1.3 Procedures Prior to Substantial Completion: Contractor shall complete the following activities a minimum of 10 days prior to requesting inspection for determining date of Substantial Completion:

- Advise Owner of pending insurance changeover requirements.
- Make final changeover of permanent locks and deliver keys to Owner. Advise Owner's personnel of changeover in security provisions.
- Complete startup and testing of systems and equipment.
- Perform preventive maintenance on equipment used prior to Substantial Completion.
- Instruct Owner's personnel in operation, adjustment, and maintenance of products, equipment, and systems. Submit demonstration and training video recordings specified elsewhere.
- Advise Owner of changeover in utility services.
- Participate with Owner in conducting inspection and walkthrough with local emergency responders.
- Terminate and remove temporary facilities from Project site, along with mockups, construction tools, and similar elements.
- Complete final cleaning requirements.
- Touch up paint and otherwise repair and restore marred exposed finishes to eliminate visual defects.

1.4 Inspection: Contractor shall submit a written request for inspection to determine Substantial Completion a minimum of 10 days prior to date the Work will be completed and ready for final inspection and tests. On receipt of request, Engineer will either proceed with inspection or notify Contractor of unfulfilled requirements. Engineer will prepare the Certificate of Substantial Completion after inspection or will notify Contractor of items, either on Contractor's list or additional items identified by Engineer, that must be completed or corrected before certificate will be issued.

- Contractor shall request reinspection when the Work identified in previous inspections as incomplete is completed or corrected.
- Results of completed inspection will form the basis of requirements for final completion.

2. FINAL COMPLETION PROCEDURES. Procedures for achieving Final Completion on the Project shall be as indicated in the Division 00 Sections and as indicated below.

2.1 Submittals Prior to Final Completion: Contractor shall submit the following to Engineering before requesting final inspection for determining final completion:

- Submit a final Application for Payment according to Progress Payment Procedures Section.
- Certified List of Incomplete Items: Submit certified copy of Architect's Substantial Completion inspection list of items to be completed or corrected (punch list), endorsed and dated by Architect. Certified copy of the list shall state that each item has been completed or otherwise resolved for acceptance.
- Certificate of Insurance: Submit evidence of final, continuing insurance coverage complying with insurance requirements.
- Submit pest-control final inspection report.
- Submit final completion photographic documentation.

2.2 Inspection: Submit a written request for final inspection to determine acceptance a minimum of 10 days prior to date the work will be completed and ready for final inspection and tests. On receipt of request, Engineer will either proceed with inspection or notify Contractor of unfulfilled requirements. Engineer will prepare a final Certificate for Payment after inspection or will notify Contractor of construction that must be completed or corrected before certificate will be issued.

Contractor shall request reinspection when the Work identified in previous inspections as incomplete is completed or corrected.

3. SUBMITTAL OF PROJECT WARRANTIES. Project Warranty information and documentation shall be submitted as indicated in the Division 00 Sections and as indicated below.

3.1 Time of Submittal: Contractor shall submit written warranties on request of Engineer for designated portions of the Work where warranties are indicated to commence on dates other than date of Substantial Completion, or when delay in submittal of warranties might limit Owner's rights under warranty.

3.2 Warranty Documentation: Contractor shall organize warranty documents into an orderly sequence based on the table of contents of Project Specifications.

Where warranty documentation is electronic, Contractor shall submit warranties and bonds in PDF format. Assemble complete warranty and bond submittal package into a single electronic PDF file with bookmarks enabling navigation to each item. Provide bookmarked table of contents at beginning of document.

Where warranty documentation is in hard copy format, Contractor shall submit warranties and bonds as follows:

- Bind warranties and bonds in heavy-duty, three-ring, vinyl-covered, loose-leaf binders, thickness as necessary to accommodate contents, and sized to receive 8-1/2-by-11-inch paper.

- Provide heavy paper dividers with plastic-covered tabs for each separate warranty. Mark tab to identify the product or installation. Provide a typed description of the product or installation, including the name of the product and the name, address, and telephone number of Installer.

- Identify each binder on the front and spine with the typed or printed title "WARRANTIES," Project name, and name of Contractor.

4. FINAL CLEANING AND REPAIR OF WORK. In addition to any specific cleaning or repair work identified in Lists of Incomplete Items for Substantial Completion or Final Completion, Contractor shall perform the following general final cleaning and repair of work:

4.1 General: Contractor shall perform final and waste-removal operations to comply with local laws and ordinances and Federal and local environmental and antipollution regulations.

4.2 Cleaning: Contractor shall employ experienced workers or professional cleaners for final cleaning. Clean each surface or unit to condition expected in an average commercial building cleaning and maintenance program. Comply with manufacturer's written instructions.

Complete the following cleaning operations before requesting inspection for certification of Substantial Completion for entire Project or for a designated portion of Project:

- Clean Project site, yard, and grounds, in areas disturbed by construction activities, including landscape development areas, of rubbish, waste material, litter, and other foreign substances.

- Sweep paved areas broom clean. Remove petrochemical spills, stains, and other foreign deposits.

- Rake grounds that are not planted, mulched, or paved to a smooth, even-textured surface.

- Remove tools, construction equipment, machinery, and surplus material from Project site.
- Remove debris and surface dust from limited access spaces, including equipment vaults, manholes, engine-generator enclosure, and similar spaces.
- Remove labels that are not permanent.
- Wipe surfaces of mechanical and electrical equipment and similar equipment. Remove excess lubrication, paint and mortar droppings, and other foreign substances.

4.3 Construction Waste Disposal: Contractor shall complete all work and submit documentation to show compliance with waste disposal requirements in Construction Waste Management and Disposal Section.

4.4 Contractor shall complete repair and restoration operations before requesting inspection for determination of Substantial Completion.

Contractor shall repair, or remove and replace, defective construction. Repairing includes replacing defective parts, refinishing damaged surfaces, touching up with matching materials, and properly adjusting operating equipment. Where damaged or worn items cannot be repaired or restored, provide replacements. Remove and replace operating components that cannot be repaired. Restore damaged construction and permanent facilities used during construction to specified condition.

Contractor shall replace burned-out bulbs, bulbs noticeably dimmed by hours of use, and defective and noisy starters in fluorescent and mercury vapor fixtures to comply with requirements for new fixtures.

End of Section

Section 01739

EQUIPMENT INSTALLATION

PART 1 - GENERAL

1-1. SCOPE. This section covers general installation requirements of new equipment units that have been purchased by Contractor as part of this Work. Equipment specific installation requirements are covered in the equipment sections.

1-2. GENERAL. Equipment installed under this section shall be erected and placed in proper operating condition in full conformity with Drawings, Specifications, engineering data, instructions, and recommendations of the equipment manufacturer, unless exceptions are noted by Engineer.

1-2.01. Coordination. When manufacturer's field services are provided by the equipment manufacturer, Contractor shall coordinate the services with the equipment manufacturer. Contractor shall give Engineer written notice at least 30 days prior to the need for manufacturer's field services furnished by others.

Flanged connections to equipment including the bolts, nuts, and gaskets are covered in the appropriate pipe specification section.

1-3. DELIVERY, STORAGE, AND HANDLING.

1-3.01. Storage. Upon delivery, all equipment and materials shall immediately be stored and protected by Contractor in accordance with the Product Storage and Handling Requirements section until installed in the Work. Equipment shall be protected by Contractor against damage and exposure from the elements. At no time shall the equipment be stored on or come into contact with the ground, grass, or any other type of vegetation. Contractor shall keep the equipment dry at all times.

PART 2 - PRODUCTS

2-1. MATERIALS. Materials shall be as follows:

Grout	As specified in the Grouting section.
Anti-Seize thread lubricant for SS bolts	As specified in the Anchorage in Concrete and Masonry section.

PART 3 - EXECUTION

3-1. INSTALLATION. Equipment shall not be installed or operated except by, or with the guidance of, qualified personnel having the knowledge and experience necessary to obtain proper results as specified in the Startup Requirements section.

Each equipment unit shall be leveled, aligned, and shimmed into position. Installation procedures shall be as recommended by the equipment manufacturer and as required herein. Shimming between machined surfaces will not be permitted.

Anti-seize thread lubricant shall be liberally applied to the threaded portion of all stainless steel bolts during assembly. For equipment installed in drinking water facilities, the anti-seize lubricant shall meet requirements of NSF-61.

When specified in the equipment sections, the equipment manufacturer will provide installation supervision and installation checks. For installation supervision, the manufacturer’s field representative will observe, instruct, guide, and direct Contractor's erection or installation procedures as specified in the equipment specifications. For installation checks, the manufacturer’s field representative will inspect the equipment installation immediately following installation by Contractor, and observe the tests indicated in the Startup Requirements section. The manufacturer's representatives will revisit the site as often as necessary to ensure installation satisfactory to Owner.

All equipment shall be protected after installation, prior to final acceptance by Owner. Protection provisions shall be as recommended by the manufacturer, and shall include provisions to prevent rust, mechanical damage, and foreign objects entering the equipment.

3-2. STARTUP AND TESTING. Startup requirements, and tests associated with startup shall be as indicated in the Startup Requirements section. Other field tests shall be as indicated in the specific equipment sections. Startup and tests required shall occur in the order listed in the following paragraphs. Tests shall not begin until any installation supervision and installation checks by the equipment manufacturer have been completed, except where noted below.

3-2.01. Preliminary Field Tests. Preliminary field tests shall be conducted on all equipment by Contractor as indicated in the Startup Requirements section. When an installation check is specified in the equipment sections, the equipment manufacturer's representative will participate in these tests to the extent described in the Startup Requirements section and in the equipment sections.

3-2.02. Field System Operation Tests. Field system operation tests shall be conducted on all equipment by Contractor as indicated in the Startup Requirements section. When an installation check is specified in the equipment sections, the equipment manufacturer's service personnel will participate in these

tests to the extent described in the Startup Requirements section and in the equipment sections.

3-2.03. Field Demonstration Tests. Field demonstration tests will be conducted by the equipment manufacturer on equipment as indicated and as specified in the equipment sections.

3-2.04. Field Performance Tests & Distribution Tests. Field performance tests or distribution tests will be conducted by the equipment manufacturer on equipment as indicated and as specified in the equipment sections.

3-2.05. Field Baseline Performance Tests. Field baseline performance tests shall be conducted by Contractor on the equipment indicated in the equipment sections, and the tests shall be performed as indicated. When indicated in the equipment sections, the equipment manufacturer will participate in these tests. This test shall not be considered an acceptance test, but rather a test to determine initial performance curves and efficiency just prior to the equipment entering service.

End of Section

Section 01820

DEMONSTRATION AND TRAINING

PART 1 - GENERAL

1.01 DESCRIPTION. This section contains requirements for training the Owner's personnel in the proper operation and maintenance of the equipment and systems installed under this contract.

1.02 GENERAL. Where indicated in the Equipment Schedule section and as required by the specifications, the manufacturer's representative shall provide on-the-job training of the Owner's personnel. The training sessions shall be conducted by qualified, experienced, factory trained representatives of the various equipment manufacturers. Training shall include instruction in both operation and maintenance of the subject equipment.

1.03 SUBMITTALS. The following information shall be submitted to the Engineer in accordance with the provisions of the Submittals section. The material shall be submitted not less than 4 weeks prior to the provision of training.

1. Lesson plans, training manuals, handouts, visual aids, and other reference materials for each training session to be conducted by the manufacturer's representatives.

2. Subject of each training session, identity and qualifications of individuals to be conducting the training, and tentative date and time of each training session.

PART 2 – PRODUCTS

2.01 GENERAL. Where specified, the Contractor shall conduct training sessions for the Owner's personnel to instruct staff on the proper operation, care, and maintenance of the equipment and systems installed under this contract. Training shall take place at the site of the work and under the conditions specified in the following paragraphs. Approved operation and maintenance manuals shall be available at least 30 days prior to the date schedule for the individual training session.

2.02 LOCATION. Training sessions shall take place at the site of the work at a location designated by the Owner.

2.03 LESSON PLANS. Formal written lesson plans shall be prepared for each training session. Lesson plans shall contain an outline of the material to be

presented along with a description of the visual aids to be utilized during the sessions. Each plan shall contain time allocation for each subject.

One complete set of originals of the lesson plans, training manuals, handouts, visual aids and reference materials shall be the property of the Owner and shall be suitable bound for proper organization and easy reproduction. The Contractor shall furnish ten copies of necessary training manuals, handouts, visual aids, and reference materials at least 1 week prior to each training session.

2.04 FORMAT AND CONTENT. Each training session shall include classroom and time at the location of the subject equipment or system. As a minimum, training sessions shall cover the following subjects for each item of equipment or system:

1. Familiarization

    a. Review catalog, parts lists, drawings, etc, which have been previously provided for the plan files and operation and maintenance manuals.
    b. Guided inspection of the subject equipment.
    c. Demonstration of the subject equipment and how operation in accordance with the specified requirements.

2. Safety

    a. Review and demonstration of safety procedures and related documentation.
    b. Inspection and discussion of hazardous components of the subject equipment.

3. Operation

    a. Review of subject equipment operations literature and theory of operation.
    b. Overview of equipment operation and function.
    c. Explanation and demonstration of all modes of operation including start up, shut down, normal, and emergency operation, and manual and automatic operation through the plant control system.
    d. Explanation of all hardwired interlocks.
    e. Explanation and demonstration of equipment related valves and their purpose.
    f. Explanation of all equipment related instruments including primary element, instrument indicator, purpose, and interpretation of information.
    g. Check out of Owner's personnel on proper use of the equipment.

4. Preventive maintenance

    a. Review preventative maintenance documentation and discussion of maintenance require at various intervals; e.g. daily, weekly, monthly, annually.
    b. Demonstrate performance of each preventive maintenance task.
    c. Identification of indicators of equipment problems.
    d. Discussion of corrosion protection and lubrication requirements.
    e. Requirements for periodic exercise of equipment and demonstration of equipment exercise where required.
    f. Identification of inspection points and demonstration of inspection covers removal and routine disassembly and assembly of equipment.

5. Corrective Maintenance and Equipment Repair

    a. Discussion of common repairs and identification of special problems.
    b. Explanation and demonstration of equipment inspection and troubleshooting.
    c. Demonstration of calibration procedures.
    d. Demonstration of repair procedures where practical.

6. Parts

    a. Discussion of the parts list and ordering of parts.
    b. Review of spare parts provided with the equipment and identification of other recommended spare part.

7. Local Representatives

    a. Name, address, telephone of local representative.
    b. Review of contact information for providers of routine and emergency repair and operational assistance.

8. Operation and Maintenance Manuals

    a. Review of O&M manual content and organization.
    b. Update O&M material as required.

2.05 VIDEO RECORDING. The Contractor shall record each training session and shall give the Owner exclusive rights to each training session recording. The Contractor shall advise all manufacturers providing training sessions that the material will be recorded.

PART 3 – EXECUTION

Training shall be conducted in conjunction with the operational testing and commissioning periods. Classes shall be scheduled so that training is performed when equipment is available for operation. The Contractor shall arrange to have the training conducted on consecutive days, with no more than 6 hours of class scheduled for any one day. Concurrent classes will not be permitted.

End of Section

Section 02050

DEMOLITION

PART 1 - GENERAL

1-1. SCOPE. This section covers the demolition of existing piping,and sitework as indicated on the Drawings and as specified herein.

1-2. GENERAL. Contractor shall be responsible for all work under this section. Contractor shall provide 14 days written notice prior to beginning demolition activities.

Demolition work shall create minimum interference with Owner's operations and minimum inconvenience to Owner. Contractor shall provide protection and safety of all roadways, sidewalks, and all accessible areas during demolition activities.

Blasting will not be permitted.

PART 2 - PRODUCTS Not used.

PART 3 - EXECUTION

3-1. DEMOLITION. Removal of equipment or facilities shall include removal of all accessories, piping, wiring, supports, associated electrical starters and devices, baseplates and frames, and all other appurtenances, unless otherwise directed. Existing materials and equipment removed, and not indicated to be reused as a part of the Work, shall become Contractor's property unless otherwise specified, and shall be removed from the Site and properly disposed of or recycled in accordance with state laws.

Contractor shall conduct demolition activities in a manner that prevents damage to existing facilities which are indicated to remain and shall provide all necessary protection for existing facilities. Any remaining facilities damaged during demolition shall be repaired by Contractor to a condition equal to or better than the original condition.

When demolition is complete, all debris shall be removed from the Site and the Site graded to the lines and grades indicated on the Drawings.

3-1.01. Structure Demolition. Not used.

3-1.02. Piping and Equipment Demolition. The following piping and equipment shall be removed and shall become the property of Contractor. All such items shall be promptly removed from the jobsite.

Existing manhole sewer piping

3-1.03. Sitework Demolition. Sitework demolition shall include the following:

Removal of asphaltic concrete pavement within the limits indicated on the Drawings.

Removal of the manhole tops, risers, and rings and covers for the manholes indicated on the Drawings.

Removal of existing fencing within the limits indicated on the Drawings.

3-2. SALVAGE.

3-2.01. Items To Be Salvaged by Owner. Not used.

3-2.02. Items To Be Salvaged by Contractor. Not used.

End of Section

Section 02200

EXCAVATION AND FILL FOR STRUCTURES

PART 1 - GENERAL

1-1. SCOPE. This section covers earthwork and shall include the necessary clearing, grubbing, and preparation of the site; removal and disposal of all debris; excavation; handling, storage, transportation, and disposal of all excavated material; all necessary sheeting, shoring, and protection work; preparation of sub-grades; pumping and dewatering as necessary; protection of adjacent property; backfilling; construction of fills and embankments; grading; and other appurtenant work.

1-2. GENERAL. With reference to the terms and conditions of the construction standards for excavations set forth in OSHA "Safety and Health Regulations for Construction", Chapter XVII of Title 29, CFR, Part 1926, Contractor shall employ a competent person and, when necessary based on the regulations, a licensed or registered professional engineer in the state where the earthwork is located, to act upon all pertinent matters of the work of this section.

1-3. SUBMITTALS. Drawings, specifications, and data covering the proposed materials shall be submitted in accordance with the Submittals Procedures section.

At least 30 days before starting construction on the sheeting and shoring and in accordance with OSHA requirements enumerated above, the Contractor shall ensure that the sheeting and shoring design engineer shall complete and submit to Engineer the Protective System Design Certificate - 1 (Fig. 1-02200) and the Contractor shall use the sheeting and shoring design. If required by the OSHA requirements enumerated above or to protect existing facilities, then the Contractor is responsible for ensuring that a separate certificate shall be submitted for each unique design. If required for protection of existing facilities or as required by the enumerated OSHA regulations, the certificate shall be signed and sealed by the registered professional engineer that designed the protection system.

1-3.01. Filter Fabric Data. Complete descriptive and engineering data for the fabric shall be submitted in accordance with the Submittals Procedures section. Data submitted shall include:

A 12 inch square sample of fabric.

Manufacturer's descriptive product data.

Installation instructions.

1-3.02 Test Results for Preliminary Review of Materials. Complete test results by an independent commercial laboratory retained by the Contractor for preliminary review of materials proposed for use in fills and embankments, structure backfill, select fill, granular fill, gravel beneath slabs, and any other fill material specified herein.

1-3.03 CLSM Mix Design. Mix design by in independent commercial laboratory to be retained by the Contractor.

1-4. BASIS FOR PAYMENT.

1-4.01. Sheeting for Excavation of Structures. No additional payment above the Contract Price will be made for steel sheet piling left in place in excavations for structures.

1-5. INSURANCE. Professional Liability insurance shall be provided as specified in the Supplementary Conditions.

PART 2 - PRODUCTS

2-1. MATERIALS.

2-1.01. Filter Fabric. Filter fabric shall be provided in rolls wrapped with covering for protection from mud, dirt, dust, and debris.

2-1.01.01. Filter Fabric Type A. Not used.

2-1.01.02. Filter Fabric Type B. Filter fabric Type B shall be provided for installation at locations indicated on the Drawings and as specified herein. Filter fabric Type B shall be a non-woven fabric consisting of only continuous chains of polypropylene filaments or yarns of polyester formed into a stable network by needle punching. The fabric shall be inert to commonly encountered chemicals; shall be resistant to mildew, rot, ultraviolet light, insects, and rodents, and shall have the indicated properties:

Property	Test Method	Unit	Min Roll Value*
Fabric Weight	ASTM D3776	oz/yd^2	10
Grab Strength	ASTM D4632	lbs	270
Grab Elongation	ASTM D4632	Percent	50
CBR Puncture Strength	ASTM D6241	lbs	700
Trapezoidal Tear	ASTM D4533	lbs	100

Property	Test Method	Unit	Min Roll Value*
UV Resistance at 500 hours	ASTM D4355	% Strength Retained	70

*Minimum average roll value in weakest principal direction.

The apparent opening size (diameter) for the filter fabric Type B shall be no larger than the U.S. Standard Sieve Size 70 per ASTM D4751.

2-1.01.03. Filter Fabric Type C. Not used.

2-1.02. Polyethylene Film. Polyethylene film beneath concrete slabs or slab base course material shall be Product Standard PS17, 6 mil minimum thickness.

2-1.03. General Fill and Embankment Materials. To the maximum extent available, excess suitable material obtained from structure and trench excavation shall be used for the construction of general fills and embankments. Additional material shall be provided from Contractor's off-site source. No borrow pits shall be opened on site unless such pits are specifically indicated on the Drawings.

All material placed in fills and embankments shall be free from rocks or stones larger than the required size in their greatest dimension, brush, stumps, logs, roots, debris, and other organic or deleterious materials. The maximum size of stone in fills and embankment shall be 3 inches. No rocks or stones shall be placed in the upper 18 inches of any fill or embankment. Rocks or stones within the allowable size limit may be incorporated in the remainder of fills and embankments, provided they are distributed so that they do not interfere with proper compaction.

2-1.04. Granular Fill. Granular fill material shall be crushed rock or gravel suitable for use as a free draining sub-base beneath slabs and foundations. Granular fill shall be free from dust, clay, and trash; hard, durable, non-friable; and shall be graded 3/4 inch to No. 4 as defined in ASTM C33 for No. 67 coarse aggregate. Granular fill shall meet the quality requirements for ASTM C33 coarse aggregate. Only crushed rock with angular particles shall be used when the perimeter of the granular fill is not confined or otherwise subject to raveling, such as on a slope.

2-1.05. Structure Backfill. Structure backfill shall be defined as the material placed around and outside of structures. For structures constructed in open excavations, structure backfill shall extend to the temporary excavation slope so that the entire excavation outside the structure shall be filled with structure backfill. For structures constructed in supported excavations, the structure backfill shall completely fill the space between structure and excavation support system, or between structure and excavation face, if these specifications permit

removal of the excavation support system. Structure backfill shall be as indicated herein.

2-1.05.01. General Fill Structure Backfill. General fill for structure backfill shall meet the requirements of the previous paragraph entitled "General Fill and Embankment Materials".

2-1.05.02. Crushed Rock Structure Backfill. Crushed rock for structure backfill shall not contain particle sizes in excess of three (3) inches, and meet the following gradation requirements:

Size	Percent Passing
1/2 inch	100
3/8 inch	90 – 100
No. 4	30 – 60
No. 8	0 – 10
No. 200	0 - 5

2-1.05.03. Clean Sand Structure Backfill. Clean sand for structure backfill shall meet the following gradation requirements:

Size	Percent Passing
3/8 inch	100
No. 4	95 – 100
No. 8	75 – 90
No. 30	30 – 50
No. 100	2 – 10
No. 200	0 - 5

2-1.06. Select Fill. Select fill shall be defined as the material placed beneath the structure foundations and slabs below any granular material layer or lean concrete slab indicated on the Drawings. Select fill shall be used to replace any unsuitable material below the structure foundations and slabs and to raise the site grades below and within 5 feet (unless a larger dimension is otherwise indicated on the Drawings or specified) of structural footprints and at locations indicated on the Drawings. Select fill shall be as indicated herein.

2-1.06.01. General Fill Select Fill. General fill for use as select fill shall meet the requirements of the previous paragraph entitled “General Fill and Embankment Materials”.

2-1.06.02. Crushed Rock Select Fill. Crushed rock for select fill shall not contain particle sizes in excess of three (3) inches, and meet the following gradation requirements:

Size	Percent Passing
1/2 inch	100
3/8 inch	90 – 100
No. 4	30 - 60
No. 8	0 - 10
No. 200	0 - 5

2-1.06.03. Clean Sand Select Fill. Clean sand for select fill shall meet the following gradation requirements:

Size	Percent Passing
3/8 inch	100
No. 4	95 – 100
No. 8	75 – 90
No. 30	30 – 50
No. 100	2 – 10
No. 200	0 - 5

2-1.07. Gravel Base Beneath Slabs. "Gravel Base Beneath Slabs" is defined as material to be placed directly beneath floor slabs of building as shown on the Drawings. The material shall meet the quality requirements specified for ASTM C33 concrete coarse aggregate and shall be graded No. 7 coarse aggregate.

2-1.08. Controlled Low Strength Material (CLSM). Not used.

2-1.09. Geocomposite Sheet Drains. The geocomposite sheet drains shall consist of a continuous plastic three dimensional drainage core wrapped on one side in a non-woven filter fabric permeable to water flow. The filter fabric shall be bonded to the individual dimples of the molded plastic core to minimize fabric intrusion into the flow channels caused by the backfill pressure. The fabric shall extend beyond the edges of the core to provide overlap for the adjacent panels. The geocomposite sheet drain shall be Miradrain 6000 as manufactured by Mirafi, Inc., or Ameridrain 200 as manufactured by American Wick Drain Corporation, or equal.

2-2. MATERIAL TESTING.

2-2.01. Preliminary Review of Materials. As stipulated in the Quality Control section, all tests required for preliminary review of materials shall be made by an acceptable independent testing laboratory at the expense of Contractor. Two initial gradation tests shall be made for each type of general fill, select fill, structure backfill, granular fill, or other specified material, and one additional gradation test shall be made for each additional 500 tons of each material delivered (imported) to the jobsite or suitable onsite material incorporated in select fill or structure backfill. One additional gradation test shall be performed for each additional 2,000 tons of general fill material delivered to the jobsite or suitable onsite material incorporated in general fill. In addition, one set of initial Atterberg Limits test shall be made for each fill material containing more than 20 percent by weight pass the No. 200 sieve and for materials specified by Atterberg Limits. One additional Atterberg Limits test shall be made for each additional 500 tons of each material delivered to the job site or otherwise incorporated in select fill or structure backfill. One additional Atterberg Limits test shall be made for each additional 2,000 tons of general fill material delivered to the jobsite or suitable onsite material incorporated in general fill.

2-2.02. Field Testing Expense. All moisture-density (Proctor) tests and relative density tests on the materials, and all in-place field density tests, shall be made by an independent testing laboratory at the expense of Contractor. Contractor shall provide access to the materials and work area and shall assist the laboratory as needed in obtaining representative samples.

2-2.03. Required Field Tests. For planning purposes the following guidelines shall be used for frequency of field tests. Additional tests shall be performed as necessary for job conditions and number of failed tests. Test results shall be submitted as indicated in the Submittals Procedures section.

Two moisture-density (Proctor) tests in accordance with ASTM D698 (or, when required, ASTM D1557), or two relative density tests in accordance with ASTM D4253 and D4254 for each type of general fill, select fill, structure backfill, granular fill, or other material proposed.

For area fills and embankments, an in-place field density and moisture test for each 1000 cubic yards of material placed.

One in-place field density and moisture test for every 100 to 200 cubic yards of structure backfill or select fill.

One in-place density and moisture test whenever there is a suspicion of a change in the quality of moisture control or effectiveness of compaction.

At least one test for every full shift of compaction operations on mass earthwork.

Additional gradation, proctor, and relative density tests whenever the source or quality of materials changes.

PART 3 - EXECUTION

3-1. SITE PREPARATION. All sites to be occupied by permanent construction or embankments shall be cleared of all logs, trees, roots, brush, tree trimmings, and other objectionable materials and debris. All stumps shall be grubbed. Subgrades for fills and embankments and sites to be occupied by permanent construction shall be cleaned and stripped of all surface vegetation, sod, and organic topsoil. All waste materials shall be removed from the site and disposed of by and at the expense of Contractor.

3-2. EXCAVATION.

3-2.01. General. Excavations shall provide adequate working space and clearances for the work to be performed therein and for installation and removal of concrete forms. In no case shall excavation faces be undercut for extended footings.

Sub-grade surfaces shall be clean and free of loose material of any kind when concrete is placed thereon.

Excavations for manholes and similar structures constructed of masonry units shall have such horizontal dimensions that not less than 6 inches clearance is provided for outside plastering.

3-2.02. Classification of Excavated Materials. No classification of excavated materials will be made for payment purposes. Excavation and trenching work shall include the removal and subsequent handling of all materials excavated or otherwise removed in performance of the work, regardless of the type, character, composition, or condition thereof.

3-2.03. Preservation of Trees. No trees shall be removed outside excavated or filled areas, unless their removal is authorized by Owner. Trees left standing shall be adequately protected from damage by construction operations.

3-2.04. Unauthorized Excavation. Except where otherwise authorized, indicated, or specified, all materials excavated below the bottom of concrete walls, footings, slabs on grade, and foundations shall be replaced with concrete or lean concrete at the expense of Contractor. If structural concrete replacement is chosen, it shall be with concrete placed at the same time and monolithic with the concrete foundation.

3-2.05. Blasting. Blasting or other use of explosives for excavation will not be permitted.

3-2.06. Dewatering. Dewatering equipment shall be provided to remove and dispose of all surface water and groundwater and all water, regardless of the source, entering excavations, trenches, or other parts of the work. Each excavation shall be kept dry during subgrade preparation and continually thereafter until the structure to be built, or the pipe to be installed therein, is completed to the extent that no damage from hydrostatic pressure, flotation, or other cause will result.

All excavations for concrete structures or trenches which extend down to or below groundwater shall be dewatered by lowering and keeping the groundwater level to the minimum depth of 12 inches , beneath such excavations. The specified dewatering depth shall be maintained below the prevailing bottom of excavation at all times.

Surface water shall be diverted or otherwise prevented from entering excavations or trenches to the greatest extent possible without causing damage to adjacent property.

Contractor shall be responsible for the condition of any pipe or conduit used for drainage purposes, and all such pipe or conduit shall be left clean and free of sediment.

3-2.07. Sheeting and Shoring. Except where banks are cut back on a stable slope, excavations for structures and trenches shall be supported as necessary to prevent caving or sliding.

Steel sheet piling or other excavation support systems shall be furnished and installed as necessary to limit the extent of excavations for the deeper structures and necessary backfill under adjacent shallower structures, and to protect adjacent structures and facilities from damage due to excavation and subsequent construction. Contractor shall assume complete responsibility for, and install adequate protection systems for prevention of damage to existing facilities.

Excavation support systems and sheeting and shoring shall be all removed after completion of work.

Unless the excavation support is required to be left in place the design of the excavation support system shall be such as to permit complete removal while maintaining safety and stability in the excavation at all times. Excavation support systems to be left in place shall be designed and constructed of only steel and pressure treated timber elements. Untreated timber shall not be used.

Sheeting, shoring and excavation support systems shall be designed by a professional engineer registered in the state where the project is located.

3-2.08. Stabilization. Sub-grades for concrete structures shall be firm, dense, and thoroughly compacted and consolidated; shall be free from mud and muck; and shall be sufficiently stable to remain firm and intact under the feet of the workers.

Sub-grades for concrete structures which are otherwise solid, but which become mucky on top due to construction operations, shall be reinforced with crushed rock or gravel as specified for granular fills. The stabilizing material shall be placed in such a manner that no voids remain in the granular fill. All excess granular fill with unfilled void space shall be removed. The finished elevation of stabilized sub-grades shall not be above sub-grade elevations indicated on the Drawings.

3-2.09. Ring-wall Excavation. Not used.

3-2.10. Roadway Excavation. Excavation for the roadways, drives, and parking areas shall conform to the lines, grades, cross sections, and dimensions indicated on the Drawings and shall include the excavation of all unsuitable material from the subgrade. After shaping to line, grade, and cross section, the subgrade shall be compacted to a depth of at least 6 inches and shall meet the following:

Test method to determine maximum density and moisture.	ASTM D1557.
Relative compaction and moisture content relative to the optimum.	98%
Moisture content relative to the optimum.	-2% to +2%.

This operation shall include any reshaping and wetting or drying required to obtain proper compaction. All soft or otherwise unsuitable material shall be removed and replaced with suitable material.

3-3. GENERAL FILLS AND EMBANKMENTS. Fills and embankments not required or indicated to be designated fills shall be constructed as general fills and embankments. All fills and embankments shall be constructed to the lines and grades indicated on the Drawings. Construction of fills and embankments shall begin from the lowest elevation in a given excavation or area and progress upward. Materials shall be deposited in approximately horizontal layers not to exceed 8 inches in uncompacted thickness. Unless otherwise specified herein, the following governing standards apply:

Test method to determine maximum density and moisture.	ASTM D1557.

Relative compaction.	98 %.
Moisture content relative to the optimum.	-2% to +2%.

3-3.01. Sub-grade Preparation. After preparation of the fill or embankment site, the sub-grade shall be scarified and moisture conditioned to a minimum depth of 6 inches , leveled and rolled so that surface materials of the sub-grade will be at a moisture content and as compact and well bonded with the first layer of the fill or embankment as specified for subsequent layers.

Unless otherwise directed by Engineer, the sub-grade shall be proof-rolled by a rubber-tired roller, a loaded dump truck, or other suitable rubber-tired equipment acceptable to Engineer. A minimum of four passes of the proof-rolling equipment shall be provided such that the last two passes are made perpendicular to the first two passes.

All soft, yielding, or otherwise unsuitable material shall be removed and replaced with compacted fill.

3-3.02. Placement and Compaction. All fill and embankment materials shall be placed in approximately horizontal layers not to exceed 8 inches in un-compacted thickness. Material deposited in piles or windrows by excavating and hauling equipment shall be spread and leveled before compaction.

Each layer of material shall have the best practicable moisture content for satisfactory compaction. The material in each layer shall be wetted or dried to achieve the moisture content relative to optimum as specified above, and shall be thoroughly mixed to ensure uniform moisture content and adequate compaction. Each layer shall be thoroughly compacted to the required degree of compaction at the required moisture content. If the material fails to meet the density specified, compaction methods shall be altered. The changes in compaction methods shall include, but not be limited to, changes in compaction equipment, reduction in uncompacted lift thickness, increase in number of passes, and better moisture control.

Wherever a pipe is to installed within a fill or embankment, the fill or embankment material shall be placed and compacted to an elevation not less than 12 inches above the top of pipe elevation before the trench for pipe installation is excavated.

3-3.03. Borrow Pits. Borrow pits are not permitted.

3-4. DESIGNATED FILLS. Designated fills are all fills designated by a name and included as subparagraph under this heading. Fills required or indicated to be designated fills shall be constructed using the specific materials and

placement requirements as specified. In addition to the specific requirements specified herein, all requirements for general fills and embankments shall apply. These requirements include, but are not limited to organic or deleterious materials, subgrade preparation, lift thickness, and moisture conditioning requirements. All designated fills shall be constructed to the lines and grades indicated on the Drawings.

3-4.01. Granular Fill. Granular fills shall be provided where indicated on the Drawings. Granular fills shall be placed on suitably prepared sub-grades in uncompacted lift thickness of 6 inches or less and compacted by vibration. Granular fills shall be compacted to not less than 70 percent relative density as determined by ASTM D4253 and D4254. If the thickness of the granular fill is less than 6 inches, the compaction shall be by a minimum four passes (round trips) of a self-propelled or walk-behind type vibratory roller operating in full vibration mode in accordance with manufacturer's instructions.

Where granular fills are to be covered with concrete, the top surface shall be graded to the required sub-grade elevation. The completed fill shall be covered by a vapor barrier.

3-4.02. Structure Backfill. Backfill materials shall be deposited in approximately horizontal layers not to exceed 8 inches in uncompacted thickness and shall meet the following requirements:

Test method to determine maximum density and moisture.	ASTM D1557.
Relative compaction.	98 %.
Moisture content relative to the optimum.	-2% to +2%.

Compaction of structure backfill shall be performed in such a manner that damage to the structure is prevented. The compaction equipment used within 8 feet of the walls and for the top 8 feet of backfill shall have no restriction on type. Limit of equipment weight shall be 2 ton . Compaction of structure backfill by inundation with water will not be permitted.

No backfill shall be deposited or compacted in water.

Particular care shall be taken to compact structure backfill which will be beneath pipes, drives, roads, parking areas, walks, curbs, gutters, or other surface construction or structures. In addition, wherever a pipe is to be installed within structure backfill, the structure backfill shall be placed and compacted to an elevation not less than 12 inches above the top of pipe before the trench for pipe installation is excavated. Compacted areas, in each case, shall be adequate to support the item to be constructed or placed thereon.

3-4.03 Select Fill. Select fill shall be placed in approximately horizontal layers in uncompacted lift thickness of 8 inches or less and shall meet the following requirements:

Test method to determine maximum density and moisture.	ASTM D1557.
Relative compaction.	98 %.
Moisture content relative to the optimum.	-2% to +2%.

3-4.04. Gravel Base Beneath Slabs. The gravel base beneath slabs shall be placed in uncompacted lift thickness of 6 inches or less and compacted with a minimum of four passes (round trips) of a self-propelled or walk-behind type vibrating roller. The roller shall be operated in the full vibrating mode and in accordance with the manufacturer's instructions.

3-4.05. Controlled Low Strength Material (CLSM) Fill. Not used.

3-4.06. Ringwall Fill. Not used.

3-5. FILTER FABRIC INSTALLATION. Filter fabric shall be placed as specified herein and at the locations specified or otherwise indicated on the Drawings.

Filter fabric shall be protected at all times during construction from contamination by foreign material and damage. Any contaminated or damaged filter fabric shall be replaced with new filter fabric at no additional cost to the Owner. The work shall be scheduled so that covering of the filter fabric is accomplished within 7 calendar days after placement of the filter fabric.

The subgrade for placement of filter fabric shall be smooth and free of irregularities and undulations. Filter fabric shall be laid smooth and free of tension, stress, folds, wrinkles, or creases. Type A and B filter fabric shall be overlapped a minimum of 2 feet between adjacent roll ends and adjacent strips.

The joints of Type C filter fabric shall be sewn. All seams shall be formed by mating the edges of the filter fabric panels and sewing them together with continuous stitches located a minimum of three inches from the edges. The thread shall be ultraviolet light resistant and manufactured from the same material as the filter fabric. A two-thread, type 401 double-lock stitch shall be used for all sewn work. Sewing methods shall conform to the latest procedures recommended by the filter fabric manufacturer. The Contractor shall demonstrate that the seam efficiency meets the requirements of the specified tabulated properties for the filter fabric as applicable.

All filter fabric placed shall be fixed to the subgrade to prevent filter fabric slippage or movement during placement of subsequent materials. Pins or staples shall not be used to fix the filter fabric to the subgrade when a geomembrane is to be placed on top of the filter fabric.

The Contractor shall exercise extreme care during filter fabric installation to prevent damage to the prepared supporting subgrade surface. The Contractor shall exercise care to prevent the entrapment of rocks, clods of earth or other material which could damage the filter fabric, clog the filter fabric or hamper seaming. Any filter fabric surface showing damage from penetration or distress caused by foreign objects shall be repaired or replaced.

No foot traffic will be allowed on the filter fabric except with approved smooth-sole shoes. The Contractor shall not use the filter fabric surface as a work area or storage area for tools and supplies.

Tracked or rubber tired construction equipment shall not be operated directly upon the filter fabric until a minimum thickness of 6 inches of the cover material is placed over the filter fabric. Turning of construction vehicles shall be minimized to avoid distorting or damaging the filter fabric. All damaged filter fabric shall be replaced at Contractor's expense.

3-6. GEOCOMPOSITE SHEET DRAINS INSTALLATION. The prefabricated geocomposite sheet drains shall be installed behind all buried structure walls as indicated on the Drawings. The fabric shall extend beyond the edges of the core to provide overlap for the adjacent panels. Before beginning the backfilling operations the geocomposite drains shall be permanently secured to the walls by means of an attachment system recommended by the manufacturer of the sheet drain. When placing geocomposite sheet drain panels adjacent to each other, the fabric edges shall be overlapped as recommended by the manufacturer. All terminal edges of the sheet drain shall be covered by tucking the filter fabric flap behind the core. The bottom end of the sheet drain to be embedded in the granular drainage material shall have the plastic core exposed by peeling back the fabric a minimum of 3 inches but not so much as to expose the plastic core to intrusion and plugging by soil backfill. Backfill shall be placed and completed within 2 weeks of installation of the sheet drains.

3-7. FINAL GRADING AND PLACEMENT OF TOPSOIL. After other outside work has been finished, and backfilling and embankments completed and settled, all areas which are to be graded shall be brought to grade at the indicated elevations, slopes, and contours. All cuts, fills, embankments, and other areas which have been disturbed or damaged by construction operations shall be surfaced with topsoil to a depth of at least 4 inches . Topsoil shall be of a quality at least equal to the existing topsoil in adjacent areas, free from trash, stones, and debris, and well suited to support plant growth. Any additional topsoil

required to provide the required minimum thickness shall be at no additional cost to the Owner.

Use of graders or other power equipment will be permitted for final grading and dressing of slopes, provided the result is uniform and equivalent to manual methods. All surfaces shall be graded to secure effective drainage. Unless otherwise indicated, a slope of at least 1 percent shall be provided.

Final grades and surfaces shall be smooth, even, and free from clods and stones, weeds, brush, and other debris.

3-8. DISPOSAL OF EXCAVATED MATERIALS. Suitable excavated materials may be used in fills and embankments as needed. All excess excavated material shall be disposed of off site at the expense of Contractor.

All debris, stones, logs, stumps, roots, and other unsuitable materials shall be removed from the site and disposed of by, and at the expense of, Contractor.

3-9. RESODDING. All established lawn areas cut by the line of trench, by excavation, or damaged during the work shall be resodded, after completion of construction, to the complete satisfaction of the property owner and Owner. All sod used shall be the same type as removed or damaged, shall be best quality, and, when placed, shall be live fresh growing grass with at least 1-1/2 inches of soil adhering to the roots.

All sod shall be procured from areas where soil is fertile and contains a high percentage of loamy topsoil and from areas that have been grazed or mowed sufficiently to form a dense turf.

Sod shall be transplanted within 24 hours from the time it is harvested, unless stacked at its destination in a suitable manner. All sod in stacks shall be kept moist and protected from exposure to the sun. In no event shall more than 1 week elapse between cutting and planting.

Before placing sod, all shaping and dressing of the areas shall have been completed. After shaping and dressing, commercial fertilizer of a type acceptable to Owner shall be applied uniformly in the manner and amounts recommended by the manufacturer, and harrowed lightly. Sodding shall follow immediately.

3-10. SETTLEMENT. Contractor shall be responsible for all settlement of backfill, fills, and embankments which may occur within the correction period stipulated in the General Conditions.

Contractor shall make, or cause to be made, all repairs or replacements made necessary by settlement within 30 days after notice from Engineer or Owner.

End of Section

TEMPORARY EXCAVATION
DESIGN CERTIFICATE – Figure 1 - 02200

I, the undersigned professional engineer licensed in the state where the earthwork is located, hereby certify that the temporary excavation for the _____(structure name) excavation at _____ (structure location) has been designed by me, is appropriate for the _____ (structure name), as represented to me, and is in compliance with the Contract Documents (including protecting adjacent structures, utilities, and other facilities from damage, and not providing a temporary earth retention design to Contractor that includes soldier piles with steel plate lagging, slide rail systems, and trench shields).

Name: _____ State of License: _____

Signature: _____ P.E. Number _____

Date: _____

_____
(Seal)

Section 02202

TRENCHING AND BACKFILLING

PART 1 - GENERAL

1-1. SCOPE. This section covers clearing, grubbing, and preparation of the site; removal and disposal of all debris; excavation and trenching; tunneled (trenchless construction) crossings; the handling, storage, transportation, and disposal of all excavated material; all necessary sheeting, shoring, and protection work; preparation of subgrades; pumping and dewatering as necessary; protection of adjacent property; backfilling; pipe embedment; surfacing and grading; and other appurtenant work.

1-2. GENERAL. With reference to the terms and conditions of the construction standards for excavations set forth in OSHA "Safety and Health Regulations for Construction", Chapter XVII of Title 29, CFR, Part 1926, Contractor shall employ a competent person and, when necessary based on the regulations, a licensed or registered professional engineer, to act upon all pertinent matters of the work of this section.

1-3. SUBMITTALS. Drawings, specifications, and data covering the proposed materials shall be submitted in accordance with the Submittals Procedures section.

At least 30 days before starting construction on the sheeting and shoring, and in accordance with the OSHA requirements identified above, the Contractor shall ensure that the sheeting and shoring design engineer shall complete and submit to Engineer the Protective System Design Certificate - 1 (Fig. 1-02200) and the Contractor shall use the sheeting and shoring design. If required by the OSHA requirements identified above or to protect existing facilities, the Contractor shall submit a separate certificate for each unique design. If required for protection of existing facilities or as required by the OSHA regulations identified above, the certificate(s) shall be signed and sealed by the registered professional engineer that designed the protection system.

1-3.01. Filter Fabric Data. Complete descriptive and engineering data for the fabric shall be submitted. Data submitted shall include:

A 12 inch square sample of fabric.

Manufacturer's descriptive product data.

Installation instructions.

1-3.02 Embedment and Backfill Materials. Complete test results covering tests performed by an independent commercial testing laboratory retained by the

Contractor for all materials described in the Materials Testing section shall be submitted.

1-4. BASIS FOR PAYMENT.

1-4.01. Trench Sheeting. No additional payment above the Contract Price will be made for trench sheeting left in place.

1-5. INSURANCE. Professional liability insurance shall be provided as specified in the Supplementary Conditions section.

PART 2 - PRODUCTS

2-1. MATERIALS.

2-1.01. Filter Fabric. The fabric shall be provided in rolls wrapped with covering for protection from mud, dirt, dust, and debris.

2-1.01.01. Filter Fabric Type A. Not Used.

2-1.01.02. Filter Fabric Type B. Filter fabric Type B shall be provided for installation at locations indicated on the Drawings and as specified herein. Filter fabric Type B shall be a nonwoven fabric consisting of only continuous chains of polymeric filaments or yarns of polyester formed into a stable network by needle punching. The fabric shall be inert to commonly encountered chemicals; shall be resistant to mildew, rot, ultraviolet light, insects, and rodents; and shall have the indicated properties:

Property	Test Method	Unit	Minimum Average Roll Value *
Fabric Weight	ASTM D3776	oz/yd2	8.0
Grab Strength	ASTM D4632	lb	215
Grab Elongation	ASTM D4632	percent	50
Mullen Burst Strength	ASTM D3786	psi	375
Apparent Opening Size	CW-02215	U.S. Standard Sieve Size	70

* Minimum average roll value in weakest principal direction.

2-1.02. Polyethylene Film. Polyethylene film beneath concrete slabs or slab base course material shall be Product Standard PS17, 6 mil minimum thickness.

2-1.03. Tunnel Materials.

2-1.03.01 Tunnel Liner Plates. Not used.

2-1.03.02. Smooth Steel Pipe. Not used.

2-1.03.03. Wood Skids and Blocking. Not used.

2-1.03.04. Casing Insulators. Not used.

2-1.03.05. Stabilized Sand Fill. Not used.

2-1.03.06. End Closure. Not used.

2-1.04. Backfill Materials.

2-1.04.01. Job Excavated Material. Job excavated material may be used for either uncompacted or compacted trench backfill when the job excavated material is finely divided and free from debris, organic material, cinders, corrosive material, and stones larger than 3 inches in greatest dimension. Masses of moist, stiff clay shall not be used.

2-1.04.02. Inundated Sand Fill. Not used.

2-1.04.03 Graded Gravel Fill. Graded gravel for compacted trench backfill shall conform to the following gradation:

Sieve Size	Percent Passing by Weight
1 inch	100
3/4 inch	85 – 100
3/8 inch	50 – 80
No. 4	35 – 60
No. 40	15 – 30
No. 200	5 – 10

The gravel mixture shall contain no clay lumps or organic matter. The fraction passing the No. 4 sieve shall have a liquid limit not greater than 25 and a plasticity index not greater than 5.

2-1.04.04. Granular Fill. Granular fill material shall be crushed rock or gravel. Granular fill shall be free from dust, clay, and trash; shall be hard, durable, and non-friable; and shall be graded 3/4 inch to No. 4 as defined in ASTM C33 for No. 67 coarse aggregate. Granular fill shall meet the quality requirements for ASTM C33 coarse aggregate.

2-1.05. Controlled Low Strength Material (CLSM) Fill. Not used.

2-1.06. Pipe Embedment Material. Pipe embedment material shall be placed as indicated in Figure 1-02202 .

2-1.06.01. Granular Embedment. Granular embedment shall consist of crushed rock and crushed gravel or pea gravel, meeting the quality and gradation requirements of coarse aggregate size number 7 of ASTM C33.

2-1.06.02. Hand Placed Embedment. Hand placed embedment shall be finely divided job excavated or imported material, free from organic materials, debris, and stones.

2-1.06.03. Compacted Embedment. Compacted embedment shall be finely divided job excavated material free from debris, organic material, and stones. Graded gravel may be substituted for compacted embedment. Granular embedment may be substituted for all or part of the compacted embedment at the option of the Contractor.

2-2. MATERIALS TESTING.

2-2.01. Preliminary Review of Materials. As stipulated in the Quality Control section, all tests required for preliminary review of materials shall be made by an acceptable independent testing laboratory at the expense of Contractor. Two initial gradation tests shall be made for each type of embedment, fill, backfill, or other material, and one additional gradation test shall be made for each additional 500 tons of each material delivered to the site. In addition, one set of initial Atterberg Limits test shall be made for each fill materials containing more than 20 percent by weight passing the No. 200 sieve. One additional Atterberg Limits test shall be made for each additional 500 tons of each material delivered to the site.

2-2.02. Field Testing Expense. All moisture-density (Proctor) tests and relative density tests on the materials, and all in-place field density tests, shall be made by an independent testing laboratory at the expense of Contractor. Contractor shall provide access to the materials and work area and shall assist the laboratory as needed in obtaining representative samples.

2-2.03. Required Tests. For planning purposes, the following guidelines shall be used for frequency of field tests. Additional tests shall be performed as necessary for job conditions and number of failed tests. Test results shall be submitted as specified in the Submittals Procedures section.

a. Two moisture density (Proctor) tests in accordance with ASTM D698 (or, when required, ASTM D1557), or two relative density tests in

accordance with ASTM D4253 and D4254 for each type of general fill, designated fill, backfill, or other material proposed.

b. In-place field density and moisture tests (ASTM D6938) at intervals of 1000 feet maximum along the trench.

c. One in-place field density and moisture test (ASTM D6938) for every 200 cubic yards of backfill.

d. One in-place density and moisture test (ASTM D6938) whenever there is a suspicion of a change in the quality of moisture control or effectiveness of compaction.

e. Additional gradation, Proctor, and relative density tests whenever the source or quality of material changes.

PART 3 - EXECUTION

3-1. CLEARING. All clearing shall be performed as necessary for access, stringing of pipeline materials, and construction of the pipeline and appurtenant structures.

3-2. EXCAVATION. Excavations shall provide adequate working space and clearances for the work to be performed therein and for installation and removal of concrete forms. In no case shall excavation faces be undercut for extended footings.

Subgrade surfaces shall be clean and free of loose material of any kind when concrete is placed thereon.

Except where exterior surfaces are specified to be damp-proofed, monolithic concrete manholes and other concrete structures or parts thereof, which do not have footings that extend beyond the outside face of exterior walls, may be placed directly against excavation faces without the use of outer forms, provided that such faces are stable and also provided that a layer of polyethylene film is placed between the earth and the concrete.

Excavations for manholes and similar structures constructed of masonry units shall have such horizontal dimensions that not less than 6 inches clearance is provided for outside plastering.

3-2.01. Classification of Excavated Materials. No classification of excavated materials will be made for payment purposes. Excavation and trenching work shall include the removal and subsequent handling of all materials excavated or otherwise removed in performance of the work, regardless of the type, character, composition, or condition thereof.

3-2.02. Preservation of Trees. No trees shall be removed outside excavated or filled areas, unless their removal is authorized by Owner. Trees left standing

shall be adequately protected from permanent damage by construction operations.

3-2.03. Blasting. Blasting or other use of explosives for excavation will not be permitted.

3-2.04. Dewatering. Dewatering equipment shall be provided to remove and dispose of all surface water and groundwater entering excavations, trenches, or other parts of the work. Each excavation shall be kept dry during subgrade preparation and continually thereafter until the structure or tunnel to be built, or the pipe to be installed therein, is completed to the extent that no damage from hydrostatic pressure, flotation, or other cause will result.

All excavations for concrete structures or trenches which extend down to or below groundwater shall be dewatered by lowering and keeping the groundwater level to the minimum depth of 12 inches, beneath such excavations. The specified dewatering depth shall be maintained below the prevailing bottom of excavation at all times.

Surface water shall be diverted or otherwise prevented from entering excavations or trenches to the greatest extent possible without causing damage to adjacent property.

Contractor shall be responsible for the condition of any pipe or conduit which he may use for drainage purposes, and all such pipe or conduit shall be left clean and free of sediment.

Contractor shall obtain from the appropriate agencies and authorities, the dewatering and stormwater discharge permits required to remove and dispose of groundwater, surface water, and any other water used in Contractor's operations. The permits shall be obtained prior to start of construction.

3-2.05. Sheeting and Shoring. Except where banks are cut back on a stable slope, excavations for structures and trenches shall be supported with steel sheet piling and shoring as necessary to prevent caving or sliding.

Sheet piling or other excavation support systems shall be installed as necessary to limit the extent of excavations for deeper structures and to protect adjacent structures and facilities from damage due to excavation and subsequent construction. Contractor shall assume complete responsibility for, and shall install adequate protection systems for prevention of damage to existing facilities.

Sheeting, shoring and excavation support systems shall be designed by a professional engineer registered in the state where the project is located.

Trench sheeting may be removed if the pipe strength is sufficient to carry trench loads based on trench width to the back of sheeting. Trench sheeting shall not be pulled after backfilling. Where trench sheeting is left in place, it shall not be braced against the pipe, but shall be supported in a manner which will preclude concentrated loads or horizontal thrusts on the pipe. Cross braces installed above the pipe to support sheeting may be removed after pipe embedment has been completed. Trench sheeting shall be removed unless, in the opinion of Engineer, removal of the sheeting will cause damage to the facility it is protecting or loss of necessary piping support from the piping embedment. If left in place, the sheeting shall cut off 12 inches below finished grade. The design of the support system shall be such as to permit complete removal while maintaining safety and stability at all times.

A movable trench support may be used, provided care is exercised in placing and moving the trench box or support bracing to prevent movement of the pipe and bedding and backfill material meets the required compaction without voids.

3-2.06. Stabilization. Sub-grades for concrete structures and trench bottoms shall be firm, dense, and thoroughly compacted and consolidated; shall be free from mud and muck; and shall be sufficiently stable to remain firm and intact under the feet of the workers.

Sub-grades for concrete structures or trench bottoms which are otherwise solid, but which become mucky on top due to construction operations, shall be reinforced with crushed rock or gravel as specified for granular fills. The stabilizing material shall be placed in a manner that no voids remain in the granular fill. All excess granular fill with unfilled void space shall be removed. The finished elevation of stabilized sub-grades shall not be above sub-grade elevations indicated on the Drawings.

3-3. TRENCH EXCAVATION. No more trench shall be opened in advance of pipe laying than is necessary to expedite the work. One block or 400 feet, whichever is the shorter, shall be the maximum length of open trench on any line under construction.

Except where tunneling is indicated on the Drawings, is specified, or is permitted by Engineer, all trench excavation shall be open cut from the surface.

Prior to excavation, Contractor shall contact local underground alert hotlines, “Dig Safe” and/or individual utility owners for marking underground utilities. Once utilities are marked, Contractor shall hand dig or pothole to expose the existing utilities. A survey shall be made of the utility size, material, location, and elevation prior to trench excavation and information shall be recorded on the record Drawings maintained by the Contractor.

3-3.01. Alignment, Grade, and Minimum Cover. The alignment and grade or elevation of each pipeline shall be fixed and determined from offset stakes. Vertical and horizontal alignment of pipes, and the maximum joint deflection used in connection therewith, shall be in conformity with requirements of the section covering installation of pipe.

Where pipe grades or elevations are not definitely fixed by the Drawings, trenches shall be excavated to a depth sufficient to provide a minimum depth of backfill cover over the top of the pipe of 36 inches over pipes below paved and graded streets and, of 36 inches over pipes in other locations. Greater pipe cover depths may be necessary on vertical curves or to provide adequate clearance beneath existing pipes, conduits, drains, drainage structures, or other obstructions encountered at normal pipe grades. Measurement of pipe cover depth shall be made vertically from the outside top of pipe to finished ground or pavement surface elevation, except where future surface elevations are indicated on the Drawings.

3-3.02. Maximum Trench Widths. Maximum trench widths shall be limited for designated conduits. Trenches shall be excavated to a width which will provide adequate working space and sidewall clearances for proper pipe installation, jointing, and embedment. However, the limiting trench widths from the bottom of the trench to an elevations 12 inches above the top of installed pipe, and the minimum permissible sidewall clearances between the installed pipe and each trench wall, shall not disturb surrounding properties or facilities.

Specified minimum sidewall clearances are not minimum average clearances but are minimum clear distances which will be required to the trench excavation or the trench protective system.

Cutting trench banks on slopes to reduce earth load to prevent sliding and caving shall be used only in areas where the increased trench width will not interfere with surface features or encroach on right-of-way limits. Slopes shall not extend lower than 12 inches above the top of the pipe.

If, for any reason, the width of the lower portion of the trench, as excavated at any point, exceeds the maximum permitted, pipe of adequate strength, special pipe embedment, or concrete arch encasement, for the applicable loading conditions and with the concurrence of Engineer, shall be furnished and installed by and at the expense of Contractor.

3-3.03. Minimum Trench Widths. Except when maximum trench width is required for certain conduits, trenches shall be excavated to the minimum trench widths indicated in the following table. Trenches shall be excavated to a width which will provide adequate working space and sidewall clearances for proper pipe installation, jointing, and embedment.

Nominal Pipe Size	Minimum Trench Width	Clearance
Less than 27 in	Pipe OD plus 24 in	12 in
27 in through 60 in	Pipe OD plus nominal pipe size	ID/2
Greater than 60 in	Pipe OD plus 70 in	30 in

Clearance = Minimum sidewall clearance
OD = Outside diameter (or span) of conduit
ID = Inside diameter (or span) of conduit.

Specified minimum sidewall clearances are not minimum average clearances but are minimum clear distances which will be required to the trench excavation or the trench protective system.

Cutting trench banks on slopes to reduce earth load to prevent sliding and caving shall be used only in areas where the increased trench width will not interfere with surface features or encroach on right-of-way limits.

3-3.04. Mechanical Excavation. The use of mechanical equipment will not be permitted in locations where its operation would cause damage to trees, buildings, culverts, or other existing property, utilities, or structures above or below ground. In all such locations, hand excavating methods shall be used.

Mechanical equipment used for trench excavation shall be of a type, design, and construction, and shall be so operated, that the rough trench excavation bottom elevation can be controlled, and that trench alignment is such that pipe, when accurately laid to specified alignment, will be centered in the trench with adequate sidewall clearance. Undercutting the trench sidewall to obtain sidewall clearance will not be permitted.

In locations where maximum trench widths are required for designated rigid conduits, mechanical equipment shall be operated so that uniform trench widths and vertical sidewalls are obtained at least from an elevation 12 inches above the top of the installed pipe to the bottom of the trench.

3-3.05. Cutting Concrete Surface Construction. Cuts in concrete pavement and concrete base pavements shall be no larger than necessary to provide adequate working space for proper installation of pipe and appurtenances. Cutting shall be started with a concrete saw in a manner which will provide a clean groove at least 1-1/2 inches deep along each side of the trench and along the of cuts for structures.

Concrete pavement and concrete base pavement over trenches excavated for pipelines shall be removed so that a shoulder not less than 6 inches in width at any point is left between the cut edge of the pavement and the top edge of the trench. Trench width at the bottom shall not be greater than at the top and no

undercutting will be permitted. Pavement cuts shall be made to and between straight or accurately marked curved lines which, unless otherwise required, shall be parallel to the center line of the trench.

Pavement removal for connections to existing lines or structures shall not exceed the extent necessary for the installation.

Where the trench parallels the length of concrete walks, and the trench location is all or partially under the walk, the entire walk shall be removed and replaced. Where the trench crosses drives, walks, curbs, or other surface construction, the surface construction shall be removed and subsequently replaced between existing joints or between saw cuts as specified for pavement.

3-3.06. Excavation Below Pipe Sub-grade. Except where otherwise required, pipe trenches shall be excavated below the underside of the pipe, as indicated on Figure 1-02202, to provide for the installation of granular embedment.

Bell holes shall provide adequate clearance for tools and methods used for installing pipe. No part of any bell or coupling shall be in contact with the trench bottom, trench walls, or granular embedment when the pipe is jointed.

3-3.07. Artificial Foundations in Trenches. Whenever unsuitable or unstable soil conditions are encountered, Contractor shall notify Engineer immediately. When authorized by the Engineer , trenches shall be excavated below grade and the trench bottom shall be brought to grade with suitable material. In such cases, adjustments will be made in the Contract Price in accordance with the provisions of the General Conditions.

3-3.08. Over-Excavation. Over-excavation carried below the grade, unless authorized by the Engineer, shall be backfilled to the required grade with material acceptable to the Engineer and compacted to the satisfaction of the Engineer, at no additional cost to the Owner.

3-4. PIPE EMBEDMENT. Embedment materials both below and above the bottom of the pipe, classes of embedment to be used, and placement and compaction of embedment materials shall conform to the requirements indicated on Figure 1-02202 and to the following supplementary requirements.

Embedment material shall contain no cinders, clay lumps, or other material which may cause pipe corrosion.

3-4.01. Embedment Classes.

a. Class A Arch Encasement. When arch encasement is indicated on the Drawings, Class A arch encasement shall be used at all locations so indicated.

When arch encasement is not indicated on the Drawings, Class A arch encasement is not required unless improper trenching or unexpected trench conditions require its use as determined by Engineer.

Concrete and reinforcing steel for Class A arch encasement shall conform to the requirements of the Cast-in-Place Concrete and Concrete Reinforcement sections.

b. Class B Embedment. Class B bedding shall be used for all steel, ductile iron, bar-wrapped concrete, and vitrified clay pipelines, and for all other pipelines not otherwise specified.

c. Class B Special Embedment. Class B special embedment shall be used for HDPE, PVC, ABS, FRP, GRP, steel or stainless steel pipe where the process fluid design maximum temperature is 140° F or higher such as for pressurized air service, and when recommended by the pipe manufacturer.

d. Class C Embedment. Class C embedment shall be used for all reinforced concrete and prestressed concrete pipelines.

3-4.02. Embedment for Ductile Iron, Steel, FRP, and PVC Pipelines. Granular embedment for polyethlene tube protected ductile iron, coal tar or tape coated steel, FRP, and PVC pipelines shall be pea gravel, crushed rock or crushed gravel with rounded or subrounded particles. Crushed rock or gravel with sharp edges which could cause significant scratching or abrasion of the pipe or damage to the coating or polyethylene tube protection shall not be used unless otherwise approved by Engineer and all damage is repaired to the satisfaction of Engineer.

Inundated sand may be used for granular embedment in locations where the use of water will cause no damage to adjacent property and where it can be placed and properly compacted without damage to the pipe.

Inundated sand for granular embedment shall be deposited in, or placed simultaneously with the application of water so that the sand is inundated during compaction. During placement, the sand shall be compacted with a mechanical probe type vibrator. Water shall be allowed to escape or shall be removed during vibration, and no ponding shall be allowed to take place. Inundated sand shall be compacted to 70 percent relative density as determined by ASTM D4253 and D4254. If the required density cannot be achieved, placement and compaction methods shall be altered.

3-4.03. Placement and Compaction.

3-4.03.01. Granular Embedment. Granular embedment material shall be spread and the surface graded to provide a uniform and continuous support beneath the pipe at all points between bell holes or pipe joints. It will be permissible to slightly

disturb the finished subgrade surface by withdrawal of pipe slings or other lifting tackle.

After each pipe has been graded, aligned, and placed in final position on the bedding material, and shoved home, sufficient pipe embedment material shall be deposited and compacted under and around each side of the pipe and back of the bell or end thereof by shovel slicing or other suitable methods to hold the pipe in proper position and alignment during subsequent pipe jointing and embedment operations.

Placing and compaction of embedment material shall not damage the pipe coating or polyethylene encasement. Embedment material shall not be dumped directly on the pipe or polyethylene encasement unless a suitable temporary isolation layer such as a 60 mil HDPE sheeting, is used to cover the pipe and polyethylene encasement.

Embedment material shall be deposited and compacted uniformly and simultaneously on each side of the pipe to prevent lateral displacement. Granular embedment shall be placed in layers not more than 6 inches deep and compacted as specified.

Each lift of granular embedment material shall be vibrated with a mechanical probe type vibrator or shovel sliced during placement to ensure that all spaces beneath the pipe are filled. Granular embedment shall be placed in maximum lift thickness of 6 inches and compacted. Each lift of embedment material shall be compacted with three passes (round trip) of a platform type vibrating compactor and to at least 70 percent relative density as determined by ASTM D4253 and D4254.

Where indicated on the Drawings or where silt, fine sand, or soft clay soils are encountered below groundwater, migration of soil into the embedment material shall be prevented by installing filter fabric Type A, or by using graded gravel in place of granular embedment. Filter fabric shall be placed on the trench surfaces so that it completely surrounds the embedment material. Joints shall be lapped 12 inches.

Unless otherwise indicated on the Drawings, where pipes pass through water-containing embankments, granular embedment material shall be omitted and the trench bottom shall be graded to provide uniform and continuous support for the pipe. The pipe shall be embedded in embankment material contaning no rocks or stones. The embedment material shall be compacted to the same density as the existing embankment or to at least 95 percent relative compaction in accordance with ASTM D698, whichever is higher.

3-4.03.02. Compacted Embedment. Compacted embedment shall be placed in uniform layers not more than 8 inches thick and compacted to not less than 98% maximum density as determined by ASTM D-1557.

Where Class C embedment is required, compacted embedment shall be placed to the top of the pipe in all areas where compacted trench backfill is specified and around restrained pipe sections. Placing and compaction of embedment shall not damage the pipe or coating.

3-4.03.03 Hand Placed Embedment. Hand placed embedment shall be placed by hand shovels or using methods that prevent dropping the material for more than 24 inches above the pipe. Hand placed embedment shall be lightly tamped using hand equipment. Care shall be taken so as to not damage the pipe or coating.

3-4.03.04. Compaction - Trench Box Support Systems. Where trench box support systems are used embedment compaction shall be performed outside the limits of the trench box so that relocating the trench box will not disturb the compacted embedment. Where necessary to protect workers, the compaction may be performed by compaction rollers or other compaction systems that are operated from above the trench and achieve the required compaction.

Trench boxes for earth trenches shall be positioned such that the bottom of the trench box is no lower than approximately two feet above the bottom of pipe invert elevation so that initial compaction of the haunch area of the pipe, from within the trench box, extends the full width of trench. Trenches shall be shaped to support the trench box above the bottom of trench.

When in rock and where it is not practicable to shape the trench to provide the trench box support above the bottom of the trench, initial compaction of the haunch area may be performed within the trench box.

Final compaction of the haunch area and all other compaction shall be performed outside the limits of the trench box after the trench box has advanced into the next section of trench.

3-5. TRENCH BACKFILL. All trench backfill above pipe embedment shall conform to the following requirements.

A layer of backfill material not more than 8 inches deep may be placed over concrete arch encasement or concrete thrust blocking after the concrete has reached its initial set, to aid curing. No additional backfill shall be placed over arch encasement or blocking until the concrete has been in place for at least 3 days.

3-5.01. Compacted Backfill. Compacted backfill will be required for the full depth of the trench above the embedment in the following locations:

Where beneath pavements, surfacings, driveways, curbs, gutters, walks, or other surface construction or structures.

Where in street, road, or highway shoulders.

In established lawn areas.

The top portion of backfill beneath established lawn areas shall be finished with at least 12 inches of topsoil corresponding to, or better than that which is underlying adjoining lawn areas.

Trench backfill material shall be suitable job excavated material or graded gravel and shall be as specified herein.

3-5.01.01. Job Excavated Material. Job excavated materials shall be placed in uniform layers not exceeding 8 inches in uncompacted thickness. Each layer of material shall have the best possible moisture content for satisfactory compaction. The material in each layer shall be wetted or dried as needed and thoroughly mixed to ensure uniform moisture content and adequate compaction. Increased layer thickness may be permitted for noncohesive material if Contractor demonstrates to the satisfaction of Engineer that the specified compacted density will be obtained. The method of compaction and the equipment used shall be appropriate for the material to be compacted and shall not transmit damaging shocks to the pipe. Job excavated material shall be compacted to 98 percent of maximum density at a moisture content within 2 percent of the optimum moisture content as determined by ASTM D1557when that test is appropriate, or to 70 percent relative density as determined by ASTM D4253 and D4254 when those tests are appropriate.

3-5.01.02. Inundated Sand. Not used.

3-5.01.03. Graded Gravel. Gravel backfill shall be deposited in uniform layers not exceeding 12 inches in uncompacted thickness. The backfill shall be compacted with a suitable vibratory roller or platform vibrator to at least 70 percent relative density as determined by ASTM D4253 and D4254. Groundwater barriers specified under pipe embedment shall extend to the top of the graded gravel backfill.

3-5.02. Ordinary Backfill. Compaction of trench backfill above pipe embedment in locations other than those specified will not be required except to the extent necessary to prevent future settlement. Contractor shall be responsible for backfill settlement as specified.

Ordinary earth backfill material to be placed above embedments shall be free of brush, roots more than 2 inches in diameter, debris, cinders, and any corrosive material, but may contain rubble and detritus from rock excavation, stones, and boulders in certain portions of the trench depth.

Backfill material above embedments shall be placed by methods which will not impose excessive concentrated or unbalanced loads, shock, or impact on installed pipe, and which will not result in displacement of the pipe.

Compact masses of stiff clay or other consolidated material more than 1 cubic foot in volume shall not be permitted to fall more than 5 feet into the trench, unless cushioned by at least 2 feet of loose backfill above pipe embedment.

No trench backfill material containing rocks or rock excavation detritus shall be placed in the upper 18 inches of the trench, nor shall any stone larger than 8 inches in its greatest dimension be placed within 3 feet of the top of pipe. Large stones may be placed in the remainder of the trench backfill only if well separated and so arranged that no interference with backfill settlement will result.

3-5.03. Water-Settled Earth Backfill. Settlement or consolidation of trench backfill using water jetting or ponding shall not be performed.

3-5.04. Structure Backfill. Backfill around manholes and small concrete vaults shall meet the requirements specified for structure backfill specified in the Excavation and Fill for Structures section.

3-5.05. Controlled Low Strength Material (CLSM). Not used.

3-6. TUNNEL EXCAVATION. Not used.

3-7. DRAINAGE MAINTENANCE. Trenches across roadways, driveways, walks, or other trafficways adjacent to drainage ditches or watercourses shall not be backfilled prior to completion of backfilling the trench on the upstream side of the trafficway, to prevent impounding water after the pipe has been laid. Bridges and other temporary structures required to maintain traffic across such unfilled trenches shall be constructed and maintained by Contractor. Backfilling shall be done so that water will not accumulate in unfilled or partially filled trenches. All material deposited in roadway ditches or other watercourses crossed by the line of trench shall be removed immediately after backfilling is completed, and the original section, grades, and contours of ditches or watercourses shall be restored. Surface drainage shall not be obstructed longer than necessary.

3-8. PROTECTION OF TRENCH BACKFILL IN DRAINAGE COURSES. Not used.

3-9. FINAL GRADING AND PLACEMENT OF TOPSOIL. After other outside work has been finished, and backfilling and embankments completed and settled, all areas which are to be graded shall be brought to grade at the indicated elevations, slopes, and contours. All cuts, fills, embankments, and other areas which have been disturbed or damaged by construction operations shall be surfaced with topsoil to a depth of at least 4 inches. Topsoil shall be of a quality at least equal to the existing topsoil in adjacent areas, free from trash, stones, and debris, and well suited to support plant growth. Topsoil required to provide the minimum thickness shall be imported and placed at no additional cost to the Owner.

Use of graders or other power equipment will be permitted for final grading and dressing of slopes, provided the result is uniform and equivalent to manual methods. All surfaces shall be graded to secure effective drainage. Unless otherwise indicated, a slope of at least 1 percent shall be provided.

Final grades and surfaces shall be smooth, even, and free from clods and stones, weeds, brush, and other debris.

3-10. DISPOSAL OF EXCESS EXCAVATED MATERIALS. Disposal of excess material from trench excavation sites shall be as follows. Except as otherwise permitted, all excess excavated materials shall be disposed of away from the site.

Broken concrete and other debris resulting from pavement or sidewalk removal, excavated rock in excess of the amount permitted to be installed in trench backfill, debris encountered in excavation work, and other similar waste materials shall be disposed of away from the site.

Excess earth from excavations located in unimproved property may be distributed directly over the pipe trench and within the pipeline right-of-way to a maximum depth of 6 inches above the original ground surface elevation at and across the trench and sloping uniformly each way. Material thus wasted shall be carefully finished with a drag, blade machine, or other suitable tool to a smooth, uniform surface without obstructing drainage at any point. Wasting of excess excavated material in the above manner will not be permitted where the line of trench crosses or is within a railroad, public road, or highway right-of-way. The disposal of waste and excess excavated materials, including hauling, handling, grading, and surfacing, shall be a subsidiary obligation of Contractor and no separate payment will be made therefore.

3-11. RESODDING. All established lawn areas cut by the line of trench or damaged during the work shall be re-sodded, after completion of construction, to the complete satisfaction of the property owner and Owner. All sod used shall be the same type as removed or damaged, shall be best quality, and, when placed,

shall be live fresh growing grass with at least 1-1/2 inches of soil adhering to the roots.

All sod shall be procured from areas where soil is fertile and contains a high percentage of loamy topsoil and from areas that have been grazed or mowed sufficiently to form a dense turf.

Sod shall be transplanted within 24 hours from the time it is harvested, unless stacked at its destination in a suitable manner. All sod in stacks shall be kept moist and protected from exposure to the sun. In no event shall more than 1 week elapse between cutting and planting.

Before placing sod, all shaping and dressing of the areas shall have been completed. After shaping and dressing, commercial fertilizer of a type acceptable to Owner shall be applied uniformly in the manner and amounts recommended by the manufacturer, and harrowed lightly. Sodding shall follow immediately.

3-12. SETTLEMENT. Contractor shall be responsible for all settlement of trench backfill which may occur within the correction period stipulated in the General Conditions.

Contractor shall make, or cause to be made, all repairs or replacements made necessary by settlement within 30 days after notice from Engineer or Owner.

End of Section

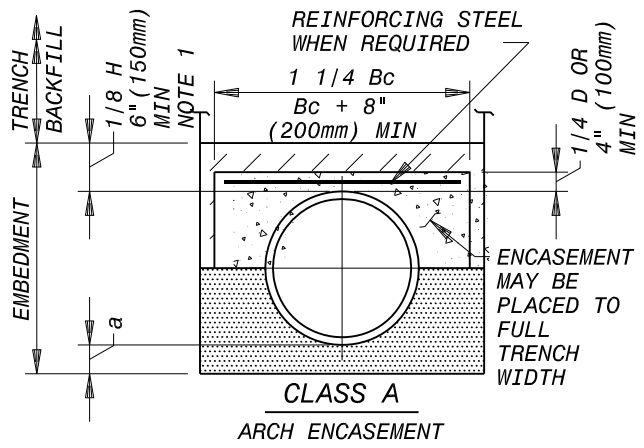

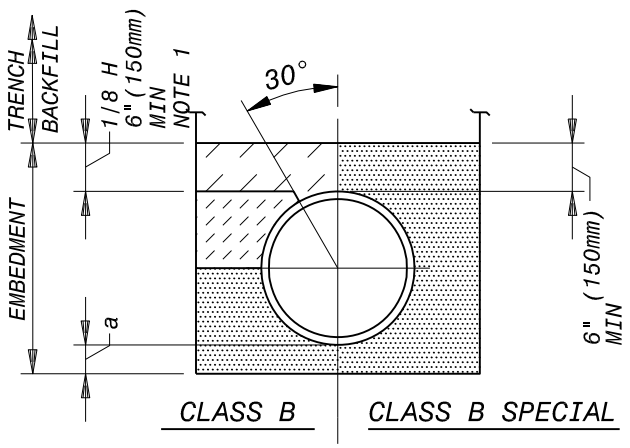

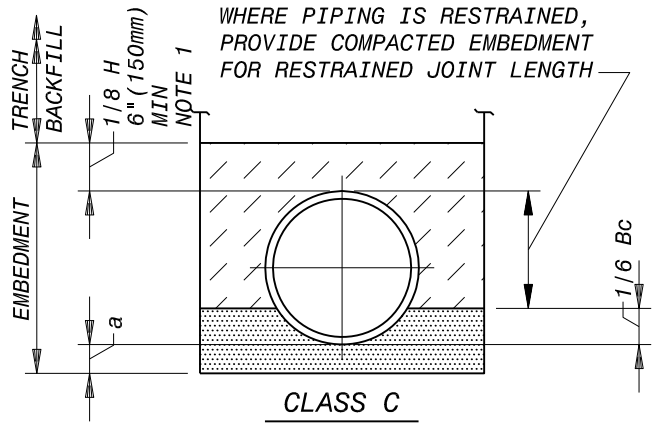

TABLE OF EMBEDMENT DEPTHS BELOW PIPE

D	a MIN SOIL		a MIN ROCK	
	in	mm	in	mm
27"(675 mm) & SMALLER	3	75	6	150
30"(750 mm) TO 60"(1500 mm)	4	100	9	225
66"(1650 mm) & LARGER	6	150	12	300

NOTES:

1. EMBEDMENT ABOVE THE TOP OF THE PIPE SHALL BE AN UNCOMPACTED LAYER FOR ALL INSTALLATIONS.
2. REFER TO SPECIFICATIONS FOR GEOTECHNICAL FABRIC OR SPECIAL EMBEDMENT REQUIREMENTS FOR TRENCHES IN FINE SOILS EXTENDING BELOW GROUNDWATER LEVEL.
3. TRENCH OUTLINES DO NOT INDICATE ACTUAL TRENCH EXCAVATION SHAPE, SOIL CONDITIONS, OR PRESENCE OF SHEETING LEFT IN PLACE. EMBEDMENT MATERIAL SHALL EXTEND THE FULL WIDTH OF THE ACTUAL TRENCH EXCAVATION.
4. FOR RESTRAINED JOINT PIPE LENGTH WITH CLASS C EMBEDMENT THE BACKFILL ABOVE THE GRANULAR EMBEDMENT AND BELOW THE TOP OF THE PIPE SHALL BE COMPACTED EMBEDMENT.

LEGEND

Bc OUTSIDE DIAMETER OF PIPE
H COVER ABOVE TOP OF PIPE
D NOMINAL PIPE SIZE
a EMBEDMENT BELOW PIPE (SEE TABLE)

HAND PLACED EMBEDMENT *

COMPACTED EMBEDMENT *

GRANULAR EMBEDMENT

CONCRETE

* OR GRANULAR EMBEDMENT

EMBEDMENTS FOR CONDUITS

BLACK & VEATCH	TRENCHING AND BACKFILLING	FIG 1-02202

PROTECTIVE SYSTEM
DESIGN CERTIFICATE – Figure 2 - 02202

I, the undersigned professional engineer registered in the state where the Project is located, hereby certify that the protection system for _____(trench location) has been designed by me, is appropriate for the (trench location) as represented to me, and is in compliance with the Contract Documents.

Name: _____ State of Registration: _____

Signature: _____ P.E. Number _____

Date: _____

_____
(Seal)

Section 02512

ASPHALT PAVING

PART 1 - GENERAL

1-1. SCOPE. This section covers the furnishing of labor, materials and equipment for the construction of asphaltic concrete base or binding course, bituminous tack coat, and asphaltic concrete surface or wearing course for the roadway, driveways and parking area as indicated on the Drawings.

Subgrade preparation shall be as indicated in the Excavation and Fill for Structures section, unless otherwise specified in the governing standards or herein.

Asphaltic concrete paving shall be constructed to the lines, grades, and cross sections indicated on the drawings. Type of construction shall be as indicated on the Drawings and as specified herein.

1-2. GENERAL.

1-2.01. Governing Standards. Except as otherwise specified or indicated, materials, equipment, details, and construction methods shall comply with the applicable FDOT provisions.

1-2.02. Coordination. Contractor shall coordinate the construction of asphaltic concrete paving with the excavation, the construction of concrete curb and gutters and other construction.

1-3. SUBMITTALS. All submittals of design mix reports including design mix test results and other data, shall be in accordance with the Submittals Procedures section.

PART 2 - PRODUCTS

2-1. MATERIALS. The sources of materials shall be acceptable to Engineer. Except as modified herein, materials shall conform to the requirements of the governing standards. Delivery tickets for all materials delivered to the site shall be submitted to Engineer at the end of each day during the progress of the work.

Asphaltic concrete materials shall be as specified in Section 334 of the Governing Standards.

Prime coat materials shall

be cut-back asphalt, conform to Section 300 of the Governing Standards.

Tack coat materials shall be emulsified asphalt, conform to Section 300 of the Governing Standards.

2-2. DESIGN MIXES. A design mix for the asphalt base course and for the surface course, based upon the aggregates to be furnished, shall be determined by an independent testing laboratory at the expense of Contractor and shall be submitted to Engineer for review.

The design mixes shall be based on the Superpave Mix Design Method, and shall be the basis for the mixes to be used in asphaltic concrete pavement construction. The proposed design mix data submitted for review shall include at least the following:

Gyrations

Nini

Ndes

Nmax

Effective voids (%)

Voids in mineral aggregate (%)

Minimum Asphalt Cement Content (%)

PART 3 - EXECUTION

3-1. EQUIPMENT. Equipment and facilities for storage, measuring, mixing, heating, transporting, spreading, compacting, and other operations shall be in accordance with the applicable requirements of the governing standards. Improved or modernized equipment which will produce results equal in quality to those which would result from the specified equipment will be considered for use. All equipment and facilities shall be acceptable to Engineer.

3-2. SUBGRADE PREPARATION. As a minimum, the top 6 inches of the subgrade shall be compacted to 95 percent of standard proctor density at optimum moisture content as determined by governing standards. In addition, the stability of subgrades shall be such that when materials for construction are deposited on the subgrade no rutting or displacement of the subgrade by material hauling vehicles will occur. No materials shall be placed on subgrades which are muddy, frozen, or have frost, snow, or water thereon. Subgrades shall be thoroughly compacted and properly shaped before any surfacing materials are placed. All subgrade and surfacing shall be sloped toward drains or outer edges.

3-3. PAVEMENTS. Unless otherwise specified, the new pavements to be constructed shall consist of an asphaltic concrete base course and an asphaltic concrete surface course, each of the thickness indicated on the Drawings. Asphaltic concrete base course shall be placed in compacted lifts no greater than 4 inches. Asphaltic concrete surface course shall be placed in compacted lifts no greater than 2 inches.

Grade control shall be maintained by Contractor by means of automatic screed controls on the paving machine and by use of erected and mobile string lines as applicable. The use of the automatically controlled paver may be waived by Engineer on irregular sections. Finished surfaces shall conform to the lines and grades indicated on the Drawings.

Asphaltic concrete pavements shall be constructed on previously prepared subgrades in accordance with the sections, in compliance with the governing standards.

Asphalt mixtures may be spread and finished by hand methods only where machine methods are impractical as determined by Engineer. Hand placed mixtures shall not be cast or otherwise manipulated in such manner that segregation occurs.

Minimum temperatures under which asphaltic concrete pavements may be constructed shall be as stipulated in the governing standards.

3-4. REPAIR OF DEFECTS. Contractor shall remove and replace defective areas by cutting to the full depth of the course. Cuts shall be made perpendicular and parallel to the direction of traffic with edges vertical.

A tack coat shall be applied to all exposed surfaces. The area shall be filled with fresh hot asphaltic concrete mix in lifts of the same depths as the adjacent area, then compacted by rolling to specified surface density and smoothness.

3-5. CLEANING. After completion of paving operation, all areas shall be cleaned of excess spilled asphalt materials to the satisfaction of Engineer.

3-6. PROTECTION. In addition to the requirements for protection stipulated in the governing standards, Contractor shall protect all adjacent concrete and masonry so that no damage will occur as the result of subsequent construction operations. All damage or discoloration shall be repaired to the satisfaction of Engineer before final acceptance by Owner.

Special care shall be taken to prevent tack or other asphalt materials from spraying or splashing. Adjacent construction shall be protected by covering with suitable fabric or paper.

End of Section

Section 02522

CONCRETE SIDEWALK, CURB, AND GUTTER

PART 1 - GENERAL

1-1. SCOPE. This section covers the construction of concrete sidewalks, curb and gutter. This section also covers the reconstruction of concrete sidewalks, curb, and gutter.

Subgrade preparation shall be as indicated in the Excavation and Fill for Structures section, unless otherwise specified in the governing standards or herein.

1-2. GENERAL. All existing sidewalks, and curb and gutters disturbed or damaged during construction of new work, or indicated on the Drawings to be demolished and replaced shall be reconstructed to the lines, grades, and cross sections indicated on the Drawings. Damaged curbs, sidewalks and/or gutters shall be to restored to their original locations, cross sections, and style unless indicated otherwise on the Drawings.

Contractor shall be responsible to remove, construct, reconstruct, and adjust as necessary all existing or new manhole tops, curb and gutter, and area drainage structures to match new grades as needed.

1-2.01. Governing Standards. Except as otherwise specified or indicated on the Drawings, materials, equipment, details, and construction methods shall comply with the applicable FDOT standards.

PART 2 - PRODUCTS

2-1. CONCRETE.

A. Concrete shall be Class B, conforming to Section 03300 – Cast-In-Place Concrete, unless noted or specified otherwise.

PART 3 - EXECUTION

3-1. SUBGRADE PREPARATION. As a minimum, the top 6 inches of the subgrade shall be compacted to a 95 percent of standard proctor density at optimum moisture content as determined by governing standards. In addition, the stability of subgrades shall be such that when materials for construction are deposited on the subgrade no rutting or displacement of the subgrade by material hauling vehicles will occur. No materials shall be placed on subgrades which are muddy, frozen, or have frost, snow, or water thereon. Subgrades shall be thoroughly compacted and properly shaped before any surfacing, curb and

gutter, or sidewalk materials are placed. All subgrade and surfacing shall be sloped as indicated on the Drawings, and as needed to achieve a uniform slope between new and existing surfaces. Sidewalks shall slope toward one edge.

3-2. CONCRETE SIDEWALKS. Concrete shall be placed, vibrated, and finished as described in the governing standards.

One-half inch expansion joints shall be provided where sidewalks abut a curb, structure, existing sidewalk, at changes in directions, and at intervals of not more than 40 feet. Expansion joints shall be filled to within 3/4 inch of the surface with bituminous expansion joint material, and then filled flush to the surface with self-leveling caulking in accordance with the Joint sealant section. The joint sealing compound shall be finished slightly concave, and shall not be allowed to overflow the joint.

Concrete sidewalks shall be screeded to the proper elevation and contour. All aggregates shall be completely embedded in mortar. Screeded surfaces shall be given an initial float finish as soon as the concrete has stiffened sufficiently for proper working. Any piece of coarse aggregate which is disturbed by the float or which causes a surface irregularity shall be removed and replaced with mortar. Initial floating shall produce a surface of uniform texture and appearance, with no unnecessary working of the surface. A second floating at the time of initial set shall follow initial floating.

Floated surfaces shall be given a light broom finish, using a horsehair broom, to provide a nonslip surface. Brooming shall be at right angles to the length of the curb, walk, or gutter.

New sidewalks shall be edged to match existing sidewalks.

The finished surface of all sidewalks shall be neat in appearance, shall be sloped to drain, and shall not pond water.

The finished concrete shall be cured and protected as stipulated in the governing standards.

3-3. CONCRETE CURB AND GUTTER. New concrete curb and gutter shall be as indicated on the Drawings and specified herein. Replacement concrete curb and gutter shall match the existing curb and gutter. Unless otherwise authorized by Engineer, adjacent and enclosed curbs, drainage structures, and gutters shall be placed before placement of pavement sections.

Expansion and contraction joints shall be formed at right angles to the alignment of the curb and/or gutter and to the depths as specified, as indicated on the Drawings, and in conformance with the governing standards. One half inch wide expansion joints shall be placed full depth using a premolded expansion joint

material, cut to the configuration of the full size of the section, being secured so that they are not moved by depositing, compacting or finishing the concrete at these joints. The edges of these joints shall be rounded by an edging tool of 1/8 inch radius.

Expansion joints shall be placed at the beginning and end of radii, where curbs and gutters abut structures, and at intervals of approximately 45 feet.

Contraction joints shall be a minimum of 3 inches deep on all sides, shall be spaced at approximately 15 foot intervals, and shall be formed by a 1/8 inch thick steel template, cut to the configuration of the section. These templates shall be secured so they are not moved by depositing, compacting or finishing the concrete.

Unless otherwise indicated on the drawings, and as soon as the concrete has hardened sufficiently, the templates shall be removed from all contraction joints. The edges of the joint shall be rounded with an edging tool having a maximum radius of 3/8 inch.

All expansion and contraction joints shall be filled flush to the surface with joint sealing compound. The joint sealing compound shall be finished slightly concave and shall not be allowed to overflow the joint.

3-3.01. Forms. Forms shall be in conformance with the governing standards. All forms shall be in good condition, with not more than 1/8 inch variation in horizontal and vertical alignment for each 10 feet in length. Side forms shall have a depth at least equal to the edge thickness of the concrete being formed. The forms shall be set true to line and grade and shall be adequately supported to stay in position while depositing and consolidating the concrete. Forms shall be designed and constructed so as to permit their removal without damage to the concrete.

3-3.02. Joints. Expansion and contraction joints shall be formed at right angles to the alignment of the curb and gutter and to the depths as specified, as indicated on the Drawings, and in conformance with the governing standards.

a. Expansion Joints. One half inch wide expansion joints shall be placed full depth using a premolded expansion joint material, cut to the configuration of the full size of the Curb and Gutter section, being secured so that they are not moved by depositing and compacting the concrete at these joints. The edges of these joints shall be rounded by an edging tool of 1/8 inch radius.

   Expansion joints shall be placed at the beginning and end of radii, where curbs and gutters abut structures, and at intervals of approximately 45 feet.

b. Contraction Joints. Contraction joints shall be a minimum of 3 inches deep on all sides, shall be spaced at approximately 15 foot intervals, and shall be formed by a 1/8 inch thick steel template, cut to the configuration of the Curb section. These templates shall be secured so that they are not moved by depositing and compacting the concrete.

Unless otherwise indicated on the Drawings, and as soon as the concrete has hardened sufficiently, the templates shall be removed from all contraction joints. The edges of the joint shall be rounded with an edging tool having a maximum radius of 3/8 inch.

All expansion and contraction joints shall be filled flush to the surface with joint sealing compound. The joint sealing compound shall be finished slightly concave and shall not be allowed to overflow the joint.

3-3.03. Finishing. Curb and gutter shall be finished to the shape indicated on the Drawings. After the forms have been removed, all exposed edges shall be rounded, using an edging tool with a 1/8 inch corner radius. Exposed surfaces shall be float finished and given a light broom finish applied at right angles to the curb at the time of initial set, using a horsehair broom. Mortar or dryer shall not be used to remove imperfections. In all cases, the resulting surface shall be smooth and of uniform color with all rough spots, projections, and form stakes removed. No plastering of the concrete will be allowed. The finished curb shall have a true surface, free from sags, twists, or warps; shall have a uniform appearance; and shall be true to the original lines, grades, and configurations indicated on the Drawings.

3-4. PROTECTION. In addition to the requirements for protection set forth in the governing standards, Contractor shall protect all adjacent concrete and masonry so that no damage will occur as the result of subsequent construction operations. All damage or discoloration shall be repaired to the satisfaction of Engineer before final acceptance by Owner.

Special care shall be taken to prevent bituminous materials from spraying or splashing. Adjacent construction shall be protected by covering with suitable fabric or paper.

End of Section

Section 02605

SANITARY UTILITY SEWERAGE MANHOLES, FRAMES, AND COVERS

PART 1 - GENERAL

1-1. SCOPE. This section covers the furnishing and installation of standard and drop sewer manholes. Standard and drop manholes shall be constructed complete with covers, steps, fittings, and other appurtenances, in accordance with the details in the figures at the end of this section.

Where required, special manholes shall be constructed in accordance with the details indicated on the Drawings.

Steps, frames, and covers for structures other than sewer manholes are covered in other sections.

1-2. GENERAL. At the option of Contractor, standard and drop manholes may be constructed with cast-in-place concrete bases or precast concrete (developed) bases as indicated on the figures.

Only manholes which are required to have inside/outside pipe and fittings for dropping sewage into the lower line will be designated as drop manholes. Inside drop manholes where the incoming line discharges directly into the manhole and which do not require special fittings will be considered standard manholes.

1-3. SUBMITTALS. Drawings and data covering precast concrete sections and castings shall be submitted in accordance with the Submittals Procedures section.

When steel-reinforced plastic manhole steps are specified, data submitted shall include verification of the type and grade of steel used for step reinforcement, typical chemical analysis of the steel, type and classification of the plastic, and reports of acceptance tests performed in accordance with ASTM C478, Section 16, and C497, Section 10.

When corrosion protection systems are specified, data submitted shall include corrosion protection materials, method of application, maintenance requirements, and other pertinent data. Contractor shall also submit a certification from the corrosion protection system manufacturer stating that the proposed epoxy coating system is completely compatible with the proposed installation.

1-4. DELIVERY, STORAGE, AND HANDLING. Shipping shall be in accordance with the Product Delivery Requirements section. Handling and storage shall be in accordance with the Product Storage and Handling Requirements section.

Precast concrete sections shall not be delivered to the job until representative concrete control cylinders have attained a strength of at least 80 percent of the specified minimum.

Precast concrete sections shall be handled carefully and shall not be bumped or dropped. Hooks shall not be permitted to come in contact with joint surfaces.

PART 2 - PRODUCTS

2-1. MATERIALS.

Precast Concrete Manholes and Reinforcement	ASTM C478, except as modified herein.
Cement	Cement type shall comply with ASTM C150, Type I or II. Water-cementitious materials ratio shall not exceed 0.40. Alternative materials proposed by Contractor that will provide equivalent corrosion protection and durability may be submitted subject to review and acceptance by Engineer.
Riser and Precast Base	Circular, uniform outside diameter.
Minimum Wall Thickness	1/12 of inside diameter, plus 1 inch .
Cone	Shape shall be concentricas required; wall thickness as specified for riser sections.
Adjusting Rings	Circular, with shear keys.
Cast-in-Place Concrete Bases	Materials, handling, forms, finishing, curing, and other work as specified in the cast-in-place concrete section.
Nonshrinking Grout	L&M "Crystex", BASF Master Builders "Masterflow 713 " or "Set Grout", Sauereisen Cements "Grout No. F-100 Level Fill Grout", , or Five Star Products "Five Star Grout".
Resilient Manhole/Pipe Connectors	A-LOK Premium manhole pipe seal.
Mastic Fill	Butyl rubber compatible with resilient connector material.

Gaskets	
Mastic	ASTM C990; Hamilton-Kent "Kent-Seal No. 2", , or Henry Company "Ram-Nek". Cross-sectional area as recommended by manhole manufacturer.
Rubber	ASTM C361, Section 6.9, except gasket shall be synthetic, with hardness of 40 ± 5 when measured by ASTM D2240, Type A durometer. Natural rubber will not be acceptable.
Rubber Joint Filler	Synthetic.
Hardness	40 ± 5 when measured by ASTM D2240, Type A durometer.
Tensile Strength	1,200 psi minimum.
Coal Tar Epoxy	High-build coal tar epoxy; Ameron "Amercoat 78HB Coal Tar Epoxy", Carboline "Bitumastic 300M", or Tnemec "46H-413 Hi-Build Tneme-Tar".
Corrosion Protection System	NeoPoxy International “NewPoxy NPR-5300 Series”; Raven Lining Systems “Raven 405”; Action Products Marketing Corp “Cor-Gard”; or Sauereisen “Sewergard No. 210RS”.
Total minimum dry film thickness (min)	160 mils (two coats, min)
Castings	ASTM A48, Class 35B or better.
Manhole Rings and Covers	Clay and Bailey "No. 2032" or Neenah Foundry "R-1769-A".
Manhole Steps	
Steel-Reinforced Plastic Manhole Steps	MeadowBurke "BOWCO No. 93813" or M.A. Industries "PS2-PF"; 1/2 inch deformed steel bar, ASTM A615, Grade 60 minimum, totally encapsulated in copolymer polypropylene, ASTM D4101.

2-2. MANUFACTURE. The first riser sections for use with cast-in-place bases shall be provided with horseshoe-shaped boxouts for connecting piping to be grouted in, or with circular openings with continuous, circular, resilient connectors cast into the riser wall. Boxouts for grouting, if used, shall have surfaces grooved or roughened to improve grout bond.

Precast base sections shall be provided with circular openings, with continuous, circular, resilient connectors cast into the wall.

Resilient connectors shall be installed in accordance with the manufacturer's recommendations, except that connectors shall be positioned so that sealing or resealing operations may be accomplished from inside the manhole.

Precast sections may be provided with lifting notches on the inside faces of walls to facilitate handling. Lifting notches shall be not more than 3 inches deep; holes extending through the wall will not be acceptable.

If precast concrete base sections are used, part of the concrete invert fill may be furnished with the precast unit; however, a rough surface shall be provided to improve bond with the final invert fill. At least the top 2 inches of the concrete invert fill shall be installed in the field.

2-3. INTERIOR CORROSION PROTECTION SYSTEM. A corrosion protection system shall be applied to the interior surfaces of the manhole. The corrosion protection system shall adequately protect the concrete from corrosion caused by exposure to hydrogen sulfide.

2-3.01. Corrosion Protection System Applicator. The applicator, as a company, shall have at least three years of experience coating manholes with epoxy, and shall have successfully installed the proposed product in a minimum of 1,000 manholes as documented by verifiable Owner references.

The applicator performing the work shall be fully qualified, experienced and equipped to complete this work expeditiously and in a satisfactory manner and shall be an approved installer as certified and licensed by the product manufacturer.

The applicator’s purposed superintendent/foreman for the work under this shall have successfully installed an epoxy lining product in a minimum of 500 manholes as documented by verifiable Owner references. The Contractor shall submit information to demonstrate that the experience requirements are met.

Information regarding the proposed corrosion protection system and applicator shall be submitted to Engineer for review and acceptance.

PART 3 - EXECUTION

3-1. INSPECTION. Precast concrete sections shall be inspected when delivered and all cracked or otherwise visibly defective units shall be rejected.

3-2. CONSTRUCTION.

3-2.01. Bases. If cast-in-place concrete bases are used, concrete shall be placed on undisturbed earth in accordance with applicable requirements of the Concrete section.

If precast concrete (developed) bases are used, the subgrade materials shall be excavated to undisturbed earth and to a uniform elevation which will permit at least 4 inches of granular embedment material, as specified in the Excavation and Fill for Structures section, to be installed and compacted. The surface of the granular material shall be carefully graded and the base section accurately set so that connecting pipes will be on proper line and grade. The elevation of the granular material shall be adjusted until proper grade and alignment of the base section has been attained.

No wedging or blocking under precast concrete bases will be permitted.

When resilient connectors are used with cast-in-place bases, the concrete fill under the connecting pipe outside the manhole shall be deleted and shall be replaced with granular embedment material to undisturbed earth.

In no case shall the invert section through a manhole be greater than that of the outgoing pipe. The shape of the invert shall conform exactly to the lower half of the pipe it connects. Side branches shall be connected with a radius of curve as large as practicable. All inverts shall be troweled to a smooth, clean surface.

3-2.02. Riser and Cone Sections and Precast Concrete Adjusting Rings. Circular precast sections and rings shall be provided with a rubber or mastic gasket to seal joints between sections and rings. Mastic gaskets shall be used only at temperatures recommended by the manufacturer. Lifting notches in manhole walls shall be filled with nonshrinking grout.

Steel-reinforced plastic manhole steps shall be provided. Manhole steps shall be plant-installed and shall be driven into prepared holes or vibrated into green concrete, in accordance with the recommendations of the step manufacturer.

3-2.03. Connecting Piping. The space between connecting pipes and the wall of precast sections shall be completely filled with non-shrink grout, except where resilient connectors are provided.

When resilient connectors are used, the connecting pipe shall be carefully adjusted to proper line and grade, and the bedding material shall be compacted under the haunches and to the spring line of the pipe for a distance of at least

6 feet from the manhole wall and to at least the minimum trench width. The pipe shall be installed in the resilient connector prior to backfilling outside the manhole and shall be resealed after completion of the manhole and backfill. All visible leakage shall be eliminated.

The connecting pipe for installation with resilient connectors shall be plain-end, square cut spigots and shall not protrude more than 1 inch inside the manhole wall. A clear distance of at least 1 inch from the end of each connecting pipe and around the pipe shall be provided when the concrete invert fill is installed. After completion of the manhole, the boxout shall be filled with mastic filler material, completely filling the space beneath the pipe and extending to at least the spring line. The filler material shall provide a smooth, uniform surface between the inside diameter of the pipe and the manhole invert.

At each special manhole, rubber joint filler shall be provided around connecting piping. The filler shall be securely fastened in place with suitable wires or straps.

3-2.04. Flat Slab Top Sections. The precast manufacturer shall certify that the flat slab top sections will support the given loads with the required openings. Items to be cast into the flat slab tops shall be sized to fit within the top and bottom surfaces of the flat slab top sections. The precast manufacturer shall size the reinforcement and the concrete thickness for the top and verify that the slab thickness is compatible with installed accessories and is adequate for the given loads.

3-2.05. Top Elevations. Unless otherwise specified or indicated on the Drawings, the top of manholes located in paved or gravel areas shall be set flush with grade.

3-3. Corrosion Protection System.

3-3.01. Corrosion Protection System Installation. The Contractor shall clean each sewer manhole to be surfaced and shall dispose of any resulting material. The cleaning shall be performed using a high-power jet wash at a minimum of 3500 psi water pressure to remove all dust, biological growths, grease, oil, paint or any other surface contaminants or coatings.

Coatings that cannot be removed shall be sanded with coarse sand paper to rough the surface sufficient to obtain and insure adequate bonding of the lining.

The Contractor shall conduct a visual inspection of each manhole after it is cleaned. All active, hydrostatic infiltration leaks shall be plugged or sealed with an appropriate grout compatible with the protection system. Injection grouting may be required to seal active leaks including leaks in invert channels and benches. All loose mortar and rubble of walls, benches and inverts shall be removed.

All walls, inverts and benches shall be coated to the minimum dry film thickness specified in Paragraph 2-1.

3-4. EXTERIOR COATING.

3-4.01. Damproofing. Before backfilling is started, the outside surfaces of each manhole shall be coated with one heavy coat of dampproofing as specified in the dampproofing section. Surfaces to receive coating shall be dry. Dampproofing may be applied to precast units in the shop. If the shop coating is damaged during construction, a touchup coat shall be applied and allowed to dry prior to backfilling.

3-4.02. Manhole Encapsulation System. Not used.

3-5. CASTING COATING. Not used.

3-6. STUBS. Not used.

End of Section

Section 02606

MANHOLE AND VAULT COVERS AND ACCESSORIES

PART 1 - GENERAL

1-1. SCOPE. This section covers the fabrication and erection of iron manhole and vault covers and accessories suitable for installation in manholes, vaults, slabs, electrical handholes, and other applications where a floor access hatch is not required. Manhole steps (suitable for both cast-in-place and epoxy grouted installations) are also included. For floor access hatches and doors see the specification section of the same name.

Fabricated items which are indicated on the Drawings but not mentioned specifically herein shall be fabricated in accordance with the applicable requirements of this section.

1-2. SUBMITTALS. Complete data, detailed drawings, and setting or erection drawings covering all materials shall be submitted in accordance with the Submittals Procedures section. Each separate piece shall be marked.

1-3. DELIVERY, STORAGE, AND HANDLING. Materials shall be handled, transported, and delivered in a manner which will prevent bends, dents, significant coating damage, or corrosion. Damaged materials shall be promptly replaced. Materials shall be stored on blocking and protected from the weather so that no metal touches the ground and water cannot collect thereon.

PART 2 - PRODUCTS

2-1. GENERAL. Materials work shall be fabricated in conformity with dimensions, arrangements, sizes, and weights or thicknesses as specified or as indicated on the Drawings.

All members and parts shall be free of warps, local deformations, and unauthorized bends. Holes and other provisions for field connections shall be accurately located and shop checked so that proper fit will result when the units are assembled in the field. All field connection materials shall be furnished.

The following Owner lettering shall be cast into the covers: CITY OF KEY WEST. Refers to drawings for additional details.

2-2. DESIGN REQUIREMENTS. Manhole and electrical vault covers and frames shall be cast iron assemblies specifically intended as covers. Manufacturer, product number, and type shall be as specified.

All covers and frames shall be capable of carrying an AASHTO HS-20 street loading unless specifically indicated as light duty. An equivalent heavy duty cover and frame may be substituted for the indicated light duty cover and frame.

2-3. MATERIALS. Materials, appurtenances, and finishes used in the manufacturer of manhole and electrical handhole covers and frames shall be as indicated. Unless otherwise required, materials, appurtenances, and finishes shall be the manufacturer's standard for the type of each cover indicated.

Circular Covers and Frames	
Light Duty	Cast iron; Clay & Bailey "2020", Neenah "R-1737", or equal.
Heavy Duty (Subject to Vehicular Traffic)	Cast iron; Clay & Bailey "2008BV",, Neenah "R-1736", or equal.
Rectangular Covers and Frames	
Light Duty	
Square	Cast iron; Neenah "R-6660", or equal.
Rectangular	Cast iron; Neenah "R-6661", or equal.
Heavy Duty (Subject to Vehicular Traffic)	
Square	Cast iron; Neenah "R-6662", or equal.
Rectangular	Cast iron; Neenah "R-6663", or equal.
Manhole Steps	Cast iron; Neenah "R-1980-J", or equal.

PART 3 - EXECUTION

3-1. INSTALLATION. Prior to installation all loose rust shall be removed from castings and one coat of coal tar epoxy shall be applied to surfaces embedded in concrete. Materials shall be erected and installed in conformity with the dimensions and arrangements specified or indicated on the Drawings and as recommended by the manufacturer.

After erection covers and frames shall be cleaned. Product finishes damaged during erection, shall be repaired as recommended by the manufacturer.

End of Section

Section 02620

DUCTILE IRON PIPE

PART 1 - GENERAL

1-1. SCOPE. This section covers the furnishing and installation of ductile iron pipe. Ductile iron pipe shall be furnished complete with all fittings, specials, adapters, closure pieces, blowoffs, outlets, caps and plugs, temporary bulkheads, access manholes, jointing materials, pipe hangers and supports, anchors, blocking, encasement, appurtenances, and accessories specified and indicated on the Drawings, and as required for proper installation and functioning of the piping.

The size, service, and locations of ductile iron pipelines are covered on the drawings.

Piping furnished hereunder shall be complete with all joint gaskets, bolts, nuts and other jointing materials required for installation of any valves and equipment furnished by Owner or others for installation under this Contract.
Pipe hangers and supports, and pressure and leakage testing, are covered in other sections. Pipe trenching, embedment, and backfill are covered in the Trenching and Backfilling section.

1-2. GOVERNING STANDARDS. Except as modified or supplemented herein, all ductile iron pipe, fittings, and specials shall conform to the applicable requirements of the following standards and other standards named in this section:

ANSI/AWWA Standards	Title
C151	Ductile-Iron Pipe, Centrifugally Cast, For Water
C600	Installation of Ductile Iron Water Mains and Their Appurtenances
M41	Ductile Iron Pipe and Fittings - Manual of Water Supply Practices
C104	Cement Mortar Lining for Ductile Iron Pipe and Fittings
C105	Polyethylene Encasement for Ductile Iron Pipe Systems
C110	Ductile-Iron and Gray-Iron Fittings
C111	Rubber-Gasket Joints for Ductile-Iron Pressure Pipe and Fittings

C115	Flanged Ductile-Iron Pipe with Ductile-Iron or Gray-Iron Threaded Flanges
C153	Ductile-Iron Compact Fittings

1-3. PIPE MANUFACTURER AND FIELD SERVICES. All ductile iron pipe, fittings, specials, bolts, gaskets, other jointing materials, and appurtenances shall be fabricated, lined, coated, and furnished under the direction and management of one pipe manufacturer. The pipe manufacturer responsibilities, which shall include, at a minimum; coordinating and furnishing all pipe materials, gaskets, bolts, and other jointing materials, and pipe appurtenances (except for furnished coupled joints and other similar products by a specified manufacturer) for a complete piping system that meets the specified test pressures and service conditions; ensuring and certifying that all pipe, fittings, specials, and other pipe materials, pipe gaskets and bolts specified herein, are being manufactured in full accordance with the Contract Documents; preparing and submitting all submittal information and shop drawings; and making any corrections that may be required to submittal information and shop drawings.

The pipe manufacturer's minimum required experience qualifications shall include manufacture of a pipeline at least 1 mile in length, of a diameter equal to or larger than the pipe to be provided, with joints, lining, and coating suitable for the same or higher pressure rating, which has performed satisfactorily for the past 5 years.

All ductile iron pipe shall be installed in accordance with the pipe manufacturer's recommendations.

1-4. SUBMITTALS. Drawings, details, specifications, and installation schedules covering all ductile iron pipe and accessories shall be submitted in accordance with the Submittals Procedures section. The drawings and data shall include, but shall not be limited to, the following:

Certification by manufacturer (affidavit of compliance) for each item furnished in accordance with the ANSI/AWWA Standards.

Restrained joints details.

Specifier. See the applicable specifier notes for discussion of when the following three optional paragraphs should be included.

Certification of gaskets by pipe manufacturer, certifying that gasket material is suitable for test pressures and services intended.

Certification that all materials in contact with treated or potable water are ANSI/NSF 61 approved.

Certification of joint lubricant.

Certification of proof-of-design tests for joints, including restrained joints.

Certification of proof-of-design tests for welded-on outlets and experience documentation. Air test documentation for the welded-on outlets used for this project.

Ground Elevation and Utility Locations:

(a) Prior to preparation of the pipe laying schedule, Contractor shall verify the existing ground elevation and the location and depth of all underground utilities using centerline stakes set at no more than 100 feet intervals. Contractor shall carefully locate and excavate utility, survey, document and submit this information to the Engineer.

(b) Engineer will review this information and if necessary make adjustment to the pipeline profile. Any plans sheets that are modified by the Engineer will be reissued to the Contractor.

Two samples of the polyethylene encasement, each sample clearly identified as required by the Governing Standards and test results from an independent third party laboratory of the requirements specified in ANSI/AWWA C105/A21.5.

The method that the Contractor proposes to use for measuring deflection of pipe joints.

Submittal data shall clearly indicate the country of origin of pipe, fittings, flanges, restraining devices, and accessories. When requested by Engineer, certified copies of physical and chemical test results as outlined in ANSI/AWWA C151/A21.51 shall be submitted for the materials to be provided.

1-4.01. Emergency Repair Manual. Not Used

1-5. SPARE MATERIALS. Not Used.

1-6. SHIPPING, HANDLING, AND STORAGE. Shipping shall be in accordance with the Product Delivery Requirements section. Handling and storage shall be

in accordance with the Product Storage and Handling Requirements section, and as specified herein.

Pipe, fittings, and accessories shall be handled in a manner that will ensure installation in sound, undamaged condition. Equipment, tools, and methods used in handling and installing pipe and fittings shall not damage the pipe and fittings. Hooks inserted in ends of pipe shall have broad, well-padded contact surfaces. Unpadded hooks, wire brushes or other abrasive tools shall not be permitted to come into contact with polyethylene lining if such lining is specified.

Contractor-furnished pipe and fittings in which the lining has been damaged shall be replaced by and at the expense of Contractor. With the concurrence of Engineer, small and readily accessible damaged areas may be repaired.

Contractor shall repair any damage to pipe coatings and linings before the pipe is installed.

PART 2 - PRODUCTS

2-1. PIPE CLASS. The class of ductile iron pipe shall be as indicated in the following table for those services indicated on the Drawings. The specified class includes service allowance and casting allowance.

Pipe Size inches	ANSI/AWWA Pressure Class
20 thru 14	250

Pipe wall thickness for grooved and threaded end pipe shall be increased if necessary to comply with the following minimum thickness:

Pipe Size	Minimum Thickness Class	
inches	Threaded Ends (1)	Grooved Ends (2)
4-16	53	53
18	53	54
20	53	55
24	53	56
30-54	53	--
60 & 64	350 (3)	--

(1) Complies with ANSI/AWWA C115/A21.15 for minimum pipe wall thickness for threaded flanges.

Pipe Size	Minimum Thickness Class	
inches	Threaded Ends (1)	Grooved Ends (2)

(2) Complies with ANSI/AWWA C606 for grooved and shouldered joint ductile iron pipe.

(3) Minimum class for 60 and 64 inch pipe is pressure class 350.

2-2. MATERIALS.

Pipe	Ductile iron, ANSI/AWWA C151/A21.51
Gaskets – All Joint Types	Synthetic rubber unless otherwise specified; natural rubber will not be acceptable. All gaskets shall be furnished by the pipe manufacturer unless another manufacturer's product is indicated. Pipe manufacturer shall submit certificates of gasket suitability certifying that the gasket materials are compatible with the joints specified, are recommended for the specified field test pressure and service conditions. Gaskets for treated or potable water service shall be certified for chlorinated and chloraminated potable water. Gas and oil-resistant gaskets shall be made of Nitrile (NBR) rubber. The name of the material shall be permanently marked or molded on the gasket. Gaskets shall also be certified as suitable where soils may be contaminated with gas and oil products.
Joint Lubricant	Vegetable-based lubricant recommended by the pipe manufacturer. Petroleum or animal-based lubricants will not be acceptable. Lubricants that will be in contact with treated or potable water shall be certified as being in compliance with ANSI/NSF 61.

Fittings	ANSI/AWWA C110/A21.10 (except shorter laying lengths will be acceptable for U.S. Pipe), or ANSI/AWWA C153/A21.53, minimum working pressure rating as follows, unless indicated otherwise on the Drawings.

Fitting Size in.	Material	Type	Min. Working Pressure Rating, psi
4 to 24	DI	Mechanical and Push-on joints	350
4 to 24	DI	Flanged joints	250
30 to 48	DI	All joints	250
54 to 64	DI	All joints	150

All fittings shall be ductile iron and suitable for the rated working pressure plus a surge or test pressure allowance of 50 psi or 1.5 times rated working pressure, whichever is less, without leakage or damage.

Push-on Joints ANSI/AWWA C111/A21.11.

	Restrained Push-on Joints, locking wedge type, (4 inch through 24 inch), working pressure rating 350 psi (2,400 kPa) for 4 through 16 inch and at least 250 psi (1,700 kPa) for 18 through 24 inch.	EBAA Iron "Megalug" Series 1700; U.S. Pipe “TR Flex Gripper Ring”; Star Pipe Products “StarGrip 3100P”; or American “Field Flex Ring”, without exception.
	Restrained Push-on Joints, positive locking segments and/or rings, (4 inch through 24 inch), working pressure rating 350 psi (2,400 kPa).	American "Flex-Ring,"; U.S. Pipe or McWane "TR Flex"
	Restrained Push-on Joints, positive locking segments and/or rings, (30 inch through 48 inch), working pressure rating at least 250 psi (1,700 kPa).	American "Flex-Ring," or "Lok-Ring"; U.S. Pipe or McWane "TR Flex"; U.S. Pipe HP LOK.

	Restrained Push-on Joints, positive locking segments and/or rings, (54 inch thru 64 inch), working pressure rating at least 250 psi (1,700 kPa).	American "Lok Ring"; or U.S, Pipe “H.P. LOK”.

Restrained push-on joints shall be suitable for a test or working pressure plus surge pressure of the rated working pressure plus 100 psi (680 kPa)

Flanged Joints			ANSI/AWWA C115/A21.15.
	Flanges		
		Class 250 (Where identified on the Drawings)	Ductile iron, flat faced, with ANSI/ASME B16.1, Class 250 diameter and drilling.
		All Others	Ductile iron, Class 125, ANSI/AWWA C115/A21.15.
	Flanges		All flanges shall be suitable for test pressure of 1.5 times rated pressure without leakage or damage.
	Bolts		ASTM A307, chamfered or rounded ends projecting 1/4 to 1/2 inch beyond outer face of nut.
	Nuts		ASTM A563, hexagonal, ANSI/ASME B18.2.2, heavy semifinished pattern.
	Gaskets		ASTM D1330, Grade I rubber, full face type, 1/8 inch thick unless otherwise required by pipe manufacturer and accepted by Engineer. Pipe manufacturer shall submit certification of gaskets furnished as indicated above under Gaskets - All Joint Types.
Mechanical Joints			ANSI/AWWA C111/A21.11., with ductile iron glands.
	Restrained Mechanical Joints (factory prepared spigot), (4 inch through 48 inch), working pressure rating at least 250 psi (1,700 kPa).		American "MJ coupled Joints", or Griffin "Mech-Lok".

	Restrained Mechanical Joints, (field cut spigot), (4 inch through 24 inch), working pressure rating 350 psi (2,400 kPa) for 4 through 16 inch and at least 250 psi (1,700 kPa) for 18 through 24 inch.		EBAA Iron "Megalug" Series 1100, Sigma “One Lok” SLDE series, or Star Pipe Products “StarGrip 3000” without exception.
Restrained mechanical joints shall be suitable for a test or working pressure plus surge pressure of the rated working pressure plus 100 psi (680 kPa)			
	Wall Pipes or Castings		Mechanical joint with water stop and tapped holes; single casting or fabricated ductile iron pipe; holes sized in accordance with the details on the Drawings and provided with removable plugs.
	Mechanical Joints with Tie Rods		As indicated on the Drawings.
		Tie Rods	ASTM A307.
		Steel Pipe	ASTM A53, Schedule 40 or 80 as indicated on the Drawings.
		Washers	ANSI/ASME B18.22.1, plain steel.
Threaded Connections			ANSI/ASME B1.20.1, NPT; with boss or tapping saddle wherever wall thickness minus the foundry tolerance at the tapped connection is less than that required for 4-thread engagement as set forth in Table A.1, Appendix A, of ANSI/AWWA C151/A21.51.
Mechanical Couplings			
	Couplings		Dresser "Style 38"; Smith-Blair "411 Steel Coupling"; or Romac “Style 400” or "Style 501"; without pipe stop.

	Gaskets	Oil-resistant synthetic rubber gaskets shall be as recommended by the coupling manufacturer. Pipe manufacturer shall submit certification of gaskets furnished as indicated above under Gaskets - All Joint Types.
Restrained Mechanical Couplings		American Pipe “Restrained Coupling Gland Joint” coordinated with mechanical couplings furnished.
Flanged Coupling Adapters		
	Restrained (4 inch through 12 inch). Unless otherwise indicated on the Drawings, flanged coupling adapters shall be restrained.	Smith-Blair "Type 912" or Romac "Style FCA501", with anchor studs of sufficient size and number to withstand test pressures.
	Unrestrained (14 inch and larger)	Smith-Blair "Type 913" or Romac "Style FC400".
Dismantling Joints		
	Restrained (3 inch and larger) Unless otherwise indicated on the Drawings, dismantling joints shall be restrained.	Romac "DJ400"; Dresser "Style 131 Dismantling Joint" or Viking Johnson. For use in potable water systems, coating to be in accordance with NSF-61.
Tapping Saddles		Ductile iron, with stainless steel straps and synthetic rubber sealing gasket, 250 psi pressure rating.
Watertight/Dusttight Pipe Sleeves		GPT " Link-Seal", insulating type with modular rubber sealing elements, nonmetallic pressure plates, and stainless steel bolts and nuts.
Shop Coating and Lining		
	Cement Mortar Lining with Seal Coat	ANSI/AWWA C104/A21.4.
	Universal Primer	Manufacturer’s standard. If in contact with treated or potable water, certify as being in compliance with ANSI/NSF 61.
	Asphaltic Coating	Manufacturer’s standard.

	Coal Tar Epoxy	Manufacturer's standard.
Anti-Seize Thread Lubricant		Jet-Lube "Nikal", John Crane "Thred Gard Nickel", Bostik/Never-Seez "Pure Nickel Special" or Permatex "Nickel Anti-Seize".
Corrosion Protection		
	Heat-shrinkable Coating and Primer (Shrink Sleeve)	ANIS/AWWA C216, cross-linked polyethylene sheeting precoated with adhesive; minimum 80 mils; type and recovery as recommended by Shrink Sleeve manufacturer; Canusa-CPS or Berry Plastics Water Wrap.
	Medium Consistency Coal Tar	Carboline "Bitumastic 50" or Tnemec "46-465 H.B. Tnemecol."

2-3. OUTLETS. Not used.

2-4. JOINTS. Joints in buried and tunnel locations shall be mechanical or push-on type unless otherwise indicated on the Drawings or where required to connect to existing piping or to valves. Bells on wall castings and wall sleeves shall be mechanical joint type, with tapped holes for tie rods or stud bolts. All other joints shall be flanged unless otherwise indicated on the Drawings.

Certification of joint design shall be provided in accordance with ANSI/AWWA C111/A21.11, Performance Requirements, as modified herein. The joint test pressure shall be not less than 2 times the working pressure rating of the joint. The same certification and testing shall also be provided for restrained joints. For restrained joints, the piping shall not be blocked to prevent separation and the joint shall not leak or show evidence of failure. It is not necessary that such tests be made on pipe manufactured specifically for this project. Certified reports covering tests made on other pipe of the same size and design as specified herein and manufactured from materials of equivalent type and quality may be accepted as adequate proof of design. Any new proof-of-design testing to meet the requirements for this project shall be independently verified and the Owner shall be given the opportunity to witness the testing.

Unless otherwise indicated on the drawings or acceptable to the Engineer, field closure pieces shall be located away from the bends or dead ends beyond the length over which joints are to be restrained.

The length of pipe having restrained joints shall be as indicated on the drawings or specified. All vertical bends and eccentric reducers shall have restrained joints.

2-4.01 Flanged Joints. Pipe shall extend completely through screwed-on flanges. The pipe end and flange face shall be finish machined in a single operation. Flange faces shall be flat and perpendicular to the pipe centerline.

2-4.02. Flanged Coupling Adaptors. Not used.

2-4.03. Dismantling Joints. Dismantling joints shall be provided for restrained couplings 6 inch and larger piping where indicated on the Drawings and as specified herein. Dismantling joints shall comply with AWWA C219 and shall be restrained flange by flange couplings manufactured as a single unit. Unless otherwise indicated on the Drawings, dismantling joints shall be restrained.

The inner and outer surfaces of dismantling joints, except flange mating surfaces, shall be prepared for coating in accordance with instructions of the coating manufacturer and shall then be shop coated with liquid epoxy in accordance with ANSI/AWWA C210. The flange mating surfaces shall be cleaned and shop primed with universal primer.

2-4.04. Mechanical Couplings. The piping layout for mechanical couplings shall provide a space of at least 1/4 inch , but not more than 1 inch , between the pipe ends.

All surfaces, including the interior surfaces of the middle rings, shall be prepared for coating in accordance with instructions of the coating manufacturer and shall be shop coated with 16 mils liquid epoxy in accordance with ANSI/AWWA C210.

A ductile iron pipe factory spacer shall be provided for the piping where indicated on the drawings. The spacer shall be shop lined and coated with 16 mils of liquid epoxy. Piping surfaces within the coupling shall be shop coated with 16 mils of liquid epoxy.

Tie bolts shall be provided to restrain mechanical coupling connections where indicated on the Drawings. The connecting pipe shall be furnished with welded retainer rings as recommended by pipe manufacturer. The pipe manufacturer shall also coordinate the restrained connection with the pressure rating, length, and diameter dimensions of the mechanical coupling being furnished to assure proper clearance is provided for completing the restrained coupling installation.

2-4.05. Grooved-End Couplings. Not used.

2-5. REDUCERS. Reducers shall be eccentric or concentric as indicated on the Drawings. Reducers of eccentric pattern shall be installed with the straight side on top, so that no air traps are formed.

2-6. BLOWOFFS. Not used.

2-7. ACCESS OPENINGS. Not used.

2-8. WALL AND FLOOR PIPES. Wall and floor pipes shall be installed where ductile iron pipes pass through concrete walls or floors, unless otherwise indicated on the Drawings.

Where a flange and mechanical joint pipe piece is to connect to a mechanical joint wall pipe or casting, the bolt holes in the bell of the wall pipe or casting shall straddle the top centerline of the horizontal pipe or casting and shall align with the bolt holes in the flange and mechanical joint piece. The top centerline shall be marked on the wall pipe or casting at the foundry or fabrication shop.

In vertical piping, the bolt holes of flanged and mechanical joint floor pipes or castings shall be aligned with the bolt holes of the flange or mechanical joint connecting piece. The required centerline alignment and orientation of the floor pipe or casting shall be marked on the floor pipe or casting at the foundry or fabrication shop.

2-9. WALL AND FLOOR SLEEVES. Wall and floor sleeves shall be installed where indicated on the Drawings and shall be installed where ductile iron pipe passes through concrete walls and floors or masonry walls, unless otherwise noted. To minimize sleeve size, piping on either side of the sleeve shall be provided with a screw-on flange, grooved coupling, or mechanical coupling with anchor studs to allow the pipe to pass through the sleeve. Where required, sleeves in masonry walls may be enlarged enough for flange or other joint restraint to pass through the sleeve.

Where specified or indicated on the Drawings, one or two sets of modular casing seals shall be installed at the face of walls to seal against soil or provide a dust or water tight seal. Contractor shall coordinate the diameter of wall or floor sleeves with the modular casing seal manufacturer. When soil may be present at wall sleeves, two sets of modular casing seals shall be installed, one at each face of the wall. Unless otherwise indicated on the Drawings, modular casing seals shall not be used in submerged conditions unless the hydrostatic pressure is less than 20 feet and piping is less than 24 inch size.

2-10. SHOP COATING AND LINING. The interior of all pipe and fittings, unless noted otherwise, shall be cement mortar lined.

Lining for pipe and fittings for gravity sewers and wastewater facilities services shall be as specified below:

Service	Lining
All other wastewater piping	mortar.

The exterior surfaces of all pipe and fittings which will be exposed in both interior and exterior locations shall be shop primed. Flange faces shall be coated with a suitable rust-preventive compound. Exterior surfaces of all other pipe and fittings shall be coated with asphaltic coating.

2-11. OWNER'S SHOP INSPECTION AND TESTING. Tests for preliminary acceptance of materials and methods of manufacture shall be made at the expense of the Contractor. At the Owner's option, inspection and control tests during manufacture of the pipe to be provided under this Contract may be made by representatives of the Owner. The manufacturer and the Contractor shall provide facilities, space, and assistance for testing and the Owner's representative shall have free access to all parts of the plant involved in the furnishing of materials under this Contract.

Prior to the start of fabrication of the pipe, the Contractor shall submit the manufacturer's fabrication schedule covering each stage of the fabrication of the pipe. A fabrication schedule shall be submitted to Owner at least 30 days prior to fabrication activities. Each time the schedule is changed, the Contractor shall revise and resubmit the schedule. The Contractor shall notify the Engineer at least 3 days prior to any change in the revised and current schedule. If the Owner's representatives make an inspection and the manufacturer is not performing the work as indicated in the revised and current schedule for that date, the expense shall be the sole responsibility of the Contractor.

The Owner's representatives may reject any material which is not applied or fabricated in accordance with the Contract Documents, and which does not attain the prescribed test results. The expense of all subsequent tests, due to failure of original materials and fabrication to comply with the Contract Documents, shall be the sole responsibility of the Contractor.

Inspection and testing by the Owner's representatives are for the sole benefit of the Owner. Inspection by the Owner's representatives, or Owner’s decision not to provide inspections, shall not relieve the Contractor of his responsibility to provide materials and perform the work in accordance with the Contract Documents.

The Owner's expense for any reinspections due to failure of original materials and fabrication to comply with the Contract Documents or for any inspection trip that was made when work was not being performed as indicated in the current schedule, will be deducted from the Contractor's pay estimate.

The Owner reserves the right to sample and test any pipe after delivery and to reject all pipe represented by any sample which fails to meet with the specified requirements.

PART 3 – EXECUTION

3-1. INSPECTION. Pipe and fittings shall be carefully examined for cracks and other defects immediately before installation; pipe ends shall be examined with particular care. All defective pipe and fittings shall be removed from the site.

3-2. PROTECTION AND CLEANING. The interior of all pipe and fittings shall be thoroughly cleaned of all foreign material prior to installation and shall be kept clean until the work is completed. Before jointing, all joint contact surfaces shall be wire brushed if necessary and wiped clean.

Precautions shall be taken to prevent foreign material from entering the pipe during installation. Debris, tools, clothing, or other objects shall not be placed in or allowed to enter the pipe.

Whenever pipe laying is stopped, the open end of the pipe shall be closed to prevent entry of dirt, mud, rodents, and other material. All water in the trench shall be removed prior to removing the closure.

3-3. CUTTING PIPE. Cutting shall be done in a neat manner, without damage to the pipe or the lining. Cuts shall be smooth, straight, and at right angles to the pipe axis. After cutting, the ends of the pipe shall be dressed with a file or a power grinder to remove all roughness and sharp edges. The cut ends of push-on joint pipe shall be suitably beveled.

All field cutting of existing gray cast iron pipe shall be done with mechanical pipe cutters, except where the use of mechanical cutters would be difficult or impracticable.

Ends of ductile iron pipe shall be cut with a portable guillotine saw, abrasive wheel, saw, milling cutter, or oxyacetylene torch. The use of hydraulic squeeze type cutters will not be acceptable. Field-cut holes for saddles shall be cut with mechanical cutters; oxyacetylene cutting will not be acceptable.

Contractor shall use factory prepared pipe ends unless a field cut is required for connections.

3-4. ALIGNMENT AND GRADE. piping shall be laid to the lines and grades indicated on the Drawings and as specified. Pipelines or runs intended to be straight shall be laid straight. Deflections from a straight line or grade shall not exceed the values stipulated for full-length push-on joint pipe for full-length mechanical joint pipe of AWWA C600, unless specially designed bells and spigots are provided. Contractor shall submit his proposed methods to measure deflection of deflected joints in accordance with the Submittal section.

Whenever deflections would exceed the values stipulated in AWWA C600, either shorter pipe sections or fittings shall be installed where needed to conform to the alignment or grade indicated on the Drawings and as acceptable to the Engineer.

Unless otherwise specified or acceptable to Engineer, laser beam equipment, surveying instruments, or other suitable means shall be used to maintain alignment and grade. At least one elevation reading shall be taken on each length of pipe. If laser beam equipment is used, periodic elevation measurements shall be made with surveying instruments to verify accuracy of grades. If such measurements indicate thermal deflection of the laser beam due to differences between the ground temperature and the air temperature within the pipe, precautions shall be taken to prevent or minimize further thermal deflections.

Additional requirements for alignment and grade are covered in the Project Requirements and Trenching and Backfilling sections and on the Drawings.

3-4.01. Tolerances. Each section of pipe shall be laid to the alignment and grade indicated on the Drawings and pipe laying schedule with pipe ends within the following tolerances;

+/- 0.10 foot in grade at any point
+/- 0.20 foot in alignment at any point

In addition, piping shall be visually straight or on a smooth curve between the points of defection or curvature indicated on the Drawings. Stricter tolerances than specified above shall be used as necessary to maintain minimum cover, to maintain required clearances, to place carrier pipe inside a tunnel liner, make connections to existing pipe, to maintain the correct slope to avoid high or low points along the pipeline other than at locations indicated on the Drawings, or to meet other restrictions as required or directed by the Engineer.

3-5. LAYING PIPE. Not used.

3-6. JOINTS.

Each joint, including restrained joints, shall be checked by Contractor as recommended by the pipe manufacturer to verify that the joint and the restraints are installed properly. Restrained joints shall be extended after they are assembled to minimize further take-up.

3-7. MECHANICAL JOINTS. Mechanical joints shall be carefully assembled in accordance with the pipe manufacturer's recommendations. If effective sealing is not obtained, the joint shall be disassembled, thoroughly cleaned, and reassembled. Bolts shall be uniformly tightened to the torque values listed in

Appendix A of ANSI/AWWA C111/A21.11. Over tightening of bolts to compensate for poor installation practice will not be acceptable.
The holes in mechanical joints with tie rods shall be carefully aligned to permit installation of the tie rods. In flange and mechanical joint pieces, holes in the mechanical joint bells and the flanges shall straddle the top centerline for horizontal piping.

3-8. PUSH-ON JOINTS. Not used.

3-9. FLANGED JOINTS. When bolting flanged joints, care shall be taken to avoid restraint on the opposite end of the pipe or fitting which would prevent uniform gasket compression or would cause unnecessary stress in the flanges. One flange shall be free to move in any direction while the flange bolts are being tightened. Bolts shall be tightened gradually in a crisscross pattern and at a uniform rate, to ensure uniform compression of the gasket around the entire flange. All flange joint bolting procedures shall be in accordance with the pipe manufacturer's recommendations.

Special care shall be taken when connecting piping to any pumping equipment to ensure that piping stresses are not transmitted to the pump flanges. All connecting piping shall be permanently supported to obtain accurate matching of bolt holes and uniform contact over the entire surface of flanges before any bolts are installed in the flanges.

Pump connection piping shall be free to move parallel to its longitudinal centerline while the bolts are being tightened. Each pump shall be leveled, aligned, and wedged into position which will fit the connecting piping, but shall not be grouted until the initial fitting and alignment of the pipe, so that the pump may be shifted on its foundation if necessary to properly install the connecting piping. Each pump shall, however, be grouted before final bolting of the connecting piping.

After final alignment and bolting, the pump connections shall be tested for applied piping stresses by loosening the flange bolts which, if the piping is properly installed, should result in no movement of the piping relative to the pump or opening of the pump connection joints. If any movement is observed, the piping shall be loosened and re-aligned as needed and then the flanges bolted back together. The flange bolts shall then be loosened and the process repeated until no movement is observed.

3-9.01. Insulated Flanged Joints. Not used.

3-10. FLANGED COUPLING ADAPTERS. Not used

3-11. DISMANTLING JOINTS. Dismantling joints shall be installed in accordance with the coupling manufacturer's recommendations.

3-12. MECHANICAL COUPLINGS. Mechanical couplings shall be installed in accordance with the coupling manufacturer's recommendations. A space of at least 1/4 inch , but not more than 1 inch , shall be left between the pipe ends. Pipe and coupling surfaces in contact with gaskets shall be clean and free from dirt and other foreign matter during assembly. All assembly bolts shall be uniformly tightened so that the coupling is free from leaks, and all parts of the coupling are square and symmetrical with the pipe. Following installation of the coupling, damaged areas of shop coatings on the pipe and coupling shall be repaired to the satisfaction of Engineer.

3-13. GROOVED-END JOINTS. Not used.

3-14. GAS AND OIL-RESISTANT GASKETS. Gas and oil-resistant gaskets shall be installed where specified, indicated on the Drawings, or directed by Engineer where jointing gaskets may be subject to permeation when piping passes through areas where soil may be contaminated with gas or petroleum (oil) products or organic solvents or their vapors.

3-15. CORROSION PROTECTION.

3-15.05. Mechanical Couplings. The tie bolts and nuts on all buried mechanical couplings shall be coated with two coats of medium consistency coal tar.

3-15.06. Restrained Mechanical Couplings. The corrosion protection for the mechanical coupling and its tie bolts and nuts of all buried restrained mechanical coupling assemblies shall be protected with two coats of medium consistency coal tar.

3-15.08. Surfaces Exposed in Manholes and Vaults. Unless otherwise specified, all uncoated surfaces exposed in manholes and vaults shall be cleaned and coated with two coats of medium consistency coal tar. The first coat shall be dry and hard before the second coat is applied. There shall be no unprotected, bare, or uncoated ferrous metal surfaces.

3-16. PROVISIONS FOR CATHODIC PROTECTION SYSTEMS. Not used.

3-16.01. Electrical Bond Across Rubber-Gasketed Joints. Two electrical bonding cables shall be provided across each mechanical coupling and each rubber-gasketed bell-and-spigot joint. Before applying the field joint coating to mechanical couplings, two small areas of the metal surface shall be exposed on each side of the coupling, on the middle ring, and on each follower ring. Each exposed area shall be thoroughly cleaned, and two cathodic protection cables shall be connected to the top of the pipe at least 12 inches apart, one end of each on either side of the joint, and to the middle ring and follower rings of mechanically coupled joints, using the thermite process. The completed

connections and exposed metal surfaces shall be coated as specified for field repair of coatings.
Joint bond cables shall contain at least 6 inches of slack wire to compensate for pipe movement and backfill settlement.

3-16.02. Electrical Bond Across Valves and Flanges. Two electrical bonding cables shall be provided across valves and flanged connections other than insulating flanges in the same manner as specified for rubber-gasketed joints.

3-16.03. Bonding Cables. Bonding cable and test lead wires shall be at least 8 AWG, Type CP copper cathodic protection cable, with low density, high molecular weight polyethylene insulation.

3-17. CONNECTIONS WITH EXISTING PIPING. Not used.

3-18. CONCRETE ENCASEMENT. Not used.

3-19. REACTION ANCHORAGE AND BLOCKING. Not used.

3-20. PRESSURE AND LEAKAGE TESTS. installation, pipe and fittings shall be subjected to a pressure test and a leakage test in accordance with the Pipeline Pressure and Leakage Testing section.

After installation, pipe and fittings shall be subjected to a pressure test and a leakage test. The Contractor shall provide all necessary pumping equipment; piping connections between the piping and the nearest available source of test water; pressure gauges; and other equipment, materials, and facilities necessary for the tests. The minimum test pressure shall be 50 psi, as indicated on the Drawings.

All pipe, fittings, valves, pipe joints, and other materials which are found to be defective shall be removed and replaced with new and acceptable materials, and the affected portion of the piping shall be retested by and at the expense of Contractor.

All joints shall be watertight and free from visible leaks. Any visible leak which is discovered within the correction period stipulated in the General Conditions shall be repaired by and at the expense of Contractor.

3-21. CLEANING AND DISINFECTION. The interior of all pipe and fittings shall be thoroughly cleaned before installation and shall be kept clean of any foreign matter until the work has been accepted. All joint contact surfaces shall be kept clean until the joint is completed.

End of Section

Section 02630

POLYVINYL CHLORIDE (PVC) PRESSURE PIPE

PART 1 - GENERAL

1-1. SCOPE. This section covers the furnishing and installation of 4 through 36 inch buried polyvinyl chloride (PVC) pressure pipe for potable water service. PVC pressure pipe shall be furnished complete with all fittings, jointing materials, anchors, blocking, encasement, and other necessary appurtenances.

Pressure and watertightness tests, cleaning, and disinfection, are covered in other sections. Pipe trenching, bedding, and backfill are covered in the Trenching and Backfilling section.

Pipe shall be furnished where indicated in the pipeline schedule or where indicated on the Drawings.

1-1.01. Pipe Manufacturer's Experience and Field Services. All polyvinyl chloride (PVC) pressure pipe and specials shall be fabricated by the pipe manufacturer. Minimum required experience qualifications shall include manufacture of a pipeline at least 1 mile in length, of a diameter equal to or larger than the pipe to be provided, and with joints suitable for the same or a greater pressure rating, which has performed satisfactorily for the past 5 years. The pipe manufacturer shall be responsible for coordinating and furnishing all PVC pipe and specials specified herein.

All PVC pipe and specials shall be installed in accordance with the pipe manufacturer's recommendations.

Each joint shall be checked by Contractor as recommended by the pipe manufacturer to verify that the joint is installed properly.

1-2. SPARE MATERIALS. Not used.

1-3. GOVERNING STANDARDS. Except as modified or supplemented herein, all PVC pressure pipe shall conform to the applicable requirements of ANSI/AWWA C900.

The supplementary information required in the governing standards is as follows:

Affidavit of Compliance	Required.
Plant Inspection	Not required.
Special Markings	Not required.

Special Preparation for Shipment	Not required.
Certification	Required.

1-4. SUBMITTALS. Drawings and data shall be submitted in accordance with the Submittals Procedures section. Drawings and data shall include, but shall not be limited to, the following:

Gasket material.

Pipe length.

Pipe Dimension Ratio.

Manufacturer's hydrostatic proof test results for each length of pipe in each lot from which pipe shall be provided for the Project, and results from dimension measurements, flattening tests, and extrusion quality tests performed in accordance with the governing standard, for each lot from which pipe is provided for the Project. Test results shall be submitted in Microsoft Excel format on CD, and shall include a summary of the number of lengths in each lot that fail the tests and the total number of lengths in each lot. The submittal shall also include a listing of the number of lengths of pipe provided from each lot.

Affidavit of Compliance (ANSI/AWWA C900, Sec. 6.3).

Certification (ANSI/AWWA C900, Sec. 4.2.4).

Certificate of Compliance with NSF Standard No. 61.

1-4.01. Emergency Repair Manual. Not used.

1-5. MATERIALS TESTING. Not used.

1-6. DELIVERY, STORAGE AND HANDLING. Shipping shall be in accordance with the Product Delivery Requirements section. Handling and storage shall be in accordance with the Product Storage and Handling Requirements section.

Pipe, fittings, and accessories shall be handled in accordance with Chapter 6 of AWWA Manual M23, to ensure installation in sound, undamaged condition. Pipe shall not be stored uncovered in direct sunlight.

PART 2 - PRODUCTS

2-1. DIMENSIONS. The dimension ratio (DR: outside diameter to wall thickness) of PVC pressure pipe shall be 32.5, pressure class 125 psi. .

2-2. MATERIALS.

Pipe	ANSI/AWWA C900; cast iron pipe OD, dimension ratio as specified herein.
Fittings	Ductile iron; ANSI/AWWA C110/A21.10, 250 psi pressure rating, except shorter laying lengths will be acceptable. Tapping saddles/sleeves shall be sized for PVC pipe.
Joints	
PVC to PVC	ANSI/AWWA C900, stab type, with elastomeric synthetic rubber gaskets. Gaskets of natural rubber will not be acceptable.
PVC to Cast Iron	ANSI/AWWA C111/A21.11, except gaskets shall be synthetic rubber. Natural rubber will not be acceptable.
Restrained Joints	ASTM F1674, EBAA Iron 2000PV series (4 inch through 20 inch) , Sigma "One Lok" SLCE series, or concrete thrust blocking.

Manufacturing quality control shall be maintained by frequent, regularly scheduled sampling and testing. Testing shall comply with the governing standards.

2-3. SHOP COATING AND LINING. The exterior surfaces of ductile iron fittings shall be coated with a bituminous coating. The interior surfaces of ductile iron fittings shall be lined with cement mortar.

PART 3 - EXECUTION

3-1. INSPECTION. Pipe and fittings shall be carefully examined for cracks and other defects immediately before installation; spigot ends and bells shall be examined with particular care. All defective pipe and fittings shall be removed from the site of the work.

3-2. LAYING PIPE. Pipe shall be protected from lateral displacement by pipe embedment material installed as specified in the Trenching and Backfilling section. Pipe shall not be laid in water or other unsuitable conditions.

Pipe shall be laid with bell ends facing the direction of laying, except when reverse laying is specifically permitted by Engineer.

Foreign matter shall be prevented from entering the pipe during installation.

Whenever pipe laying is stopped, the open end of the line shall be sealed with a watertight plug. All water shall be removed from the trench prior to removing the plug.

3-2.01. Cleaning. The interior of all pipe and fittings shall be thoroughly cleaned before installation and shall be kept clean until the work has been accepted.

3-2.02. Alignment. Piping shall be laid to the lines and grades indicated on the Drawings. Pipelines or runs intended to be straight shall be laid straight. Deflections from a straight line or grade shall not exceed the maximum deflections specified by the manufacturer.

Unless otherwise specified or indicated on the Drawings, and subject to acceptance by Engineer, either shorter pipe sections or fittings shall be installed as required to maintain the indicated alignment or grade.

3-3. CUTTING PIPE. Cutting shall comply with the pipe manufacturer's recommendations and with Chapter 7 of AWWA Manual M23. Cuts shall be smooth, straight, and at right angles to the pipe axis. After cutting, the end of the pipe shall be dressed to remove all roughness and sharp corners and shall be beveled in accordance with the manufacturer's instructions.

3-4. JOINTS. Joints shall be gasketed push on type meeting the requirements of ASTM D3139 unless otherwise indicated on the Drawings.

3-4.01. Gasketed Push-on Type Joints. Jointing shall conform to the instructions and recommendations of the pipe manufacturer. All surfaces of the spigot end of the gasketed joints shall be lubricated immediately before the joint is completed. Gaskets and lubricants shall be supplied by the pipe manufacturer, shall be suitable for use in potable water, shall be compatible with the pipe materials, shall be stored in closed containers, and shall be kept clean. Each spigot shall be suitably beveled to facilitate assembly.

3-4.02. Mechanical Joints. Mechanical joints shall be carefully assembled in accordance with the manufacturer's recommendations. If effective sealing is not obtained, the joint shall be disassembled, thoroughly cleaned, and reassembled. Over-tightening of bolts to compensate for poor installation practice will not be permitted.

3-5. POLYETHYLENE ENCASEMENT. Not used.

3-6. CONNECTIONS WITH EXISTING PIPING. Connections with existing pipes shall be made using fittings suitable for the conditions encountered. Each connection with an existing pipe shall be made at a time and under conditions which will least interfere with service to customers, and as authorized by Owner.

Facilities shall be provided for proper dewatering and for disposal of water removed from the dewatered lines and excavations without damage to adjacent property.

3-7. SERVICE CONNECTIONS. Tapping saddles or tapping sleeves shall be used for all service connections 2 inches and smaller. Direct tapping of PVC pipe will not be permitted. Fittings shall be used for service connections larger than 2 inches.

3-8. CONCRETE ENCASEMENT. Concrete encasement shall be installed as indicated on the Drawings. Concrete and reinforcing steel shall be as specified in the Cast-in-Place Concrete section. All pipe to be encased shall be suitably supported and blocked in proper position and shall be anchored against flotation.

3-9. RESTRAINED JOINTS. All bell-and-spigot or all-bell tees, Y-branches, bends deflecting 11-1/4 degrees or more, valves, and plugs which are installed in piping subjected to internal hydrostatic heads in excess of 30 feet shall be provided with suitable restraint.

Concrete blocking shall extend from the fitting to solid, undisturbed earth and shall be installed so that all joints are accessible for repair. The dimensions of concrete reaction blocking shall be as indicated on the Drawings or as directed by Engineer.

Reaction blocking, anchorages, or other supports for fittings installed in fills or other unstable ground shall be provided as indicated by the Drawings or as directed by Engineer.

All steel clamps, rods, bolts, and other metal accessories used in tapping saddles or reaction anchorages subject to submergence or in contact with earth or other fill material, and not encased in concrete, shall be coated in accordance with the Protective Coatings section.

3-10. PRESSURE AND LEAKAGE TESTS. After installation, PVC piping shall be hydrostatically tested for defective workmanship and materials as specified in the Pipeline Pressure and Leakage Testing section.

3-11. LEAKAGE. All PVC piping shall be watertight and free from leaks. Each leak which is discovered within the correction period stipulated in the General Conditions shall be repaired by and at the expense of Contractor.

End of Section

Section 02704

PIPELINE PRESSURE AND LEAKAGE TESTING

PART 1 - GENERAL

1-1. SCOPE. This section covers field hydrostatic pressure and leakage testing of piping. The term "piping" shall be used in this section to refer to piping systems, pipelines, or sections thereof.

1-2. GENERAL. Contractor shall coordinate pressure and leakage testing with adjacent work as necessary to preclude work interferences or duplication of effort and to expedite the overall progress of the work.

Contractor shall provide all necessary piping, piping connections, temporary valves, backflow preventers, and all other items of equipment or facilities necessary to complete the pressure and leakage testing.

In all cases where it is necessary to interrupt service, permission of Owner shall be obtained at least two days before the service will be interrupted. In all cases where it is necessary to interrupt service to water customers, permission of the Owner shall be obtained and each customer affected shall be notified of the proposed service interruption and its possible duration in accordance with the Project Requirements section.

Contractor shall notify federal, state, and local regulatory agencies to determine if any special procedures or permits are required for disposal of water used for pressure and leakage testing and to identify acceptable locations for disposal of the water. All requirements and costs associated with notifications and obtaining any discharge permit or approvals shall be responsibility of Contractor.

Engineer or Engineer's representative shall be present during testing and shall be notified of the time and place of testing at least 3 days prior to commencement of testing. All testing shall be performed to the satisfaction of Engineer, and in accordance with all governing standards and regulations.

1-2.01. Testing Schedule and Procedure. A testing schedule and procedure shall be submitted to Engineer for review and acceptance not less than 21 days prior to commencement of testing. The schedule and procedure shall include, but not be limited to the following information for each pipe section to be tested:

limits of each pipe test section;
proposed time and sequence;
physical locations and set positions of all valves;
locations of temporary bulkheads, stops, caps, restraints, supports, and other temporary equipment needed;

manner of filling and source of water;
method and location of metering volumes;
method and location of gauging pressures; and
method and location of disposal of test water.

1-2.02. Special Testing Requirements. Not used.

1-2.03. Water. Water for testing shall be furnished as stipulated in the Temporary Facilities section. Following completion of testing, the water shall be disposed of in accordance with the requirements of regulatory agencies and in a manner acceptable to Engineer.

PART 2 - PRODUCTS

2-1. TEST EQUIPMENT. All necessary connections between the piping to be tested and the water source, together with pumping equipment, water meter, pressure gauges, backflow prevention, and all other equipment, materials, and facilities required to perform the specified tests, shall be provided. All required blind flanges, valves, bulkheads, bracing, blocking, and other sectionalizing devices shall also be provided. All temporary sectionalizing devices shall be removed upon completion of testing. Vents shall be provided in test bulkheads where necessary to expel air from the piping to be tested.

Test pressure shall be applied by means of a force pump sized to produce and maintain the required pressure without interruption during the test.

Water meters and pressure gauges shall be accurately calibrated and shall be subject to review and acceptance by Engineer.

Permanent or temporary gauge connections shall be installed at each location where test gauges are connected to the piping during the required test. Drilling and tapping of pipe walls will be permitted. Upon successful completion of testing, each permanent gauge connection shall be fitted with an isolation valve and a permanent gauge, and each temporary gauge connection, if used, shall be fitted with a permanent sealed plug or cap acceptable to the Engineer.

Permanent or temporary fill and vent connections shall be installed as needed for the required test. Drilling and tapping of pipe walls will be permitted. Upon successful completion of testing, each permanent fill and vent connection shall be fitted with the permanent fill or vent piping, and each temporary fill and vent connection, if used, shall be fitted with a permanent sealed plug or cap acceptable to the Engineer.

PART 3 - EXECUTION

3-1. FILLING AND VENTING. Before filling the piping with water, care shall be taken to ensure that all air release valves and other venting devices are properly installed and operating properly. Hand-operated vent valves shall not be closed until an uninterrupted stream of water is flowing from each valve. The rate of filling the piping with water must not exceed the venting capacity of the installed air vent valves and devices.

3-2. BLOCKING AND BACKFILLING. Piping shall be adequately blocked, anchored, and supported before the test pressure is applied. All piping may be tested after backfilling.

3-3. PRESSURE TESTING. After the piping to be tested has been filled with water, the test pressure shall be applied and maintained without interruption within plus or minus 5 psi of test pressure for 2 hours plus any additional time required for Engineer to examine all piping being tested and for Contractor to locate any defective joints and pipe materials. The test pressure shall be in accordance with the requirements specified for pipeline or plant piping.

3-3.01. Pipeline Test Pressure. Piping shall be subjected to a hydrostatic test pressure of 50 psi.

The test pressure, expressed in feet of water, to be applied at any point in the piping shall be equivalent to the arithmetic difference between the specified test pressure plane elevation and the elevation of the horizontal center line of the piping at the selected location. The value obtained shall be multiplied by 0.433 to obtain psi.

3-3.02. Plant Piping Test Pressure. Not used.

3-4. PLANT PIPING LEAKAGE TESTING. Not used.

3-5. PIPELINE LEAKAGE TESTING. The pipeline piping shall be subjected to a leakage test. Leakage testing may be conducted concurrently with pressure testing. The duration of the leakage test shall be 2 hours plus the additional time required for Engineer to make an accurate determination of leakage.

3-5.01. Leakage Test Pressure. The hydrostatic pressure maintained during the leakage test shall be equal to the pressure specified for pressure testing of the piping and shall be maintained within plus or minus 5 psi during the entire time that leakage measurements are being performed.

3-5.02. Leakage Measurement. Measurement of leakage shall not be attempted until all trapped air has been vented, absorption of water by the pipe wall or lining has stabilized, and a constant test pressure has been established. After the pressure has stabilized, piping leakage shall be measured with a suitable water meter installed in the pressure piping on the discharge side of the force pump.

3-5.03. Allowable Leakage. The term "leakage", as used herein, refers to the total amount of makeup water which must be added into the piping during the test to maintain the test pressure.

No piping will be accepted if and while it exhibits a leakage rate in excess of that determined by the indicated formulas:

$$Q = 1.26 \times 10^{-6} \ DLN \text{ (using SI units)}$$

Where

Q = allowable leakage in liters per hour

D = nominal diameter of pipe in millimeters

L = length of section tested in meters

N = square root of weighted average test pressure in kilopascals

The weighted average test pressure shall be equivalent to the arithmetic difference between the specified test pressure plane elevation in feet and the average elevation of the pipeline in feet , multiplied by 0.433 to obtain psi . The weighted average elevation of the pipeline shall be calculated by (1) breaking the pipeline into sections at each significant change in slope and multiplying the average elevation of each section by the length of each section, (2) then summing the products, and (3) dividing the sum by the total length of the pipeline.

Whenever the piping to be tested contains pipe of different diameters, the allowable leakage shall be calculated separately for each diameter and the corresponding length of piping. The resulting allowable leakage rates shall be added to obtain the total allowable leakage for the entire piping.

All joints in piping shall be free from visible leaks during the leakage test. Each leak which is discovered within the correction period stipulated in the General Conditions shall be repaired by and at the expense of Contractor regardless of the amount that the total leakage may have been below the specified allowable leakage rate during the leakage test.

If the leakage test indicates a higher than allowable leakage rate, Contractor shall locate and repair leaking joints and other defective work and repeat the test the until leakage rate is less than the allowable rate.

End of Section

Section 02725

STORMWATER TREATMENT DEVICES

PART 1 - GENERAL

1-1. SCOPE. This section covers the furnishing and installation of stormwater treatment devices. Stormwater treatment devices shall be constructed complete with covers, fittings, and other appurtenances, in accordance with the details in the drawings.

1-2. GENERAL. At the option of Contractor, stormwater treatment devices may be constructed with cast-in-place concrete bases or precast concrete (developed) bases as indicated on the drawings. However, Contractor shall be responsible for design of cast-in-place concrete elements and coordination with the Stormwater Treatment Device supplier to ensure that final assembly and operation of the treatment devices meets the requirements specified herein.

1-3. SUBMITTALS.

1-3.01. Drawings and Data. Complete fabrication and assembly drawings, together with detailed specifications and data covering materials, parts, devices, and accessories forming a part of the equipment furnished, shall be submitted in accordance with the Submittals Procedures section. The data and specifications submitted for each unit shall include, but shall not be limited to, the following:

Stormwater Treatment Devices

Name of manufacturer.
Type and model.
Tag number.
Designation.
Location.
Design Flow Rate.
Peak Flow Capacity.
Volume of Dry Storage.
Number of Chambers.
Removal Efficiency for TSS.
Scour Resistance.
Access Hatch Type.
Materials of Internal Components.
Precast Concrete Test Data.

When corrosion protection systems are specified, data submitted shall include corrosion protection materials, method of application, maintenance requirements, and other pertinent data.

Installation information shall be submitted to clearly indicate offloading, movement, placement, installation, and testing of the units.

1-3.02. Operation and Maintenance Data and Manuals. Operation and maintenance manuals shall be submitted in accordance with the Submittals Procedures section. The operation and maintenance manuals shall be in addition to any instructions or parts lists packed with or attached to the equipment when delivered.

1-4. DELIVERY, STORAGE, AND HANDLING. Shipping shall be in accordance with the Product Delivery Requirements section. Handling and storage shall be in accordance with the Product Storage and Handling Requirements section.

Precast concrete sections shall not be delivered to the job until representative concrete control cylinders have attained a strength of at least 80 percent of the specified minimum.

Precast concrete sections shall be handled carefully and shall not be bumped or dropped. Hooks shall not be permitted to come in contact with joint surfaces.

PART 2 - PRODUCTS

2-1. ACCEPTABLE PRODUCTS. Stormwater treatment devices furnished under this section shall be manufactured by Suntree Technologies Inc. or approved equal.

2-2. PERFORMANCE AND DESIGN REQUIREMENTS. Stormwater treatment devices shall be designed for the performance and design requirements as follows:

Typical Hydraulic Treatment Capacity.	11	cfs
TSS Removal for 150 µm Particle.	80	%
Volume of Sediment Storage.	160	ft^3
Number of Sediment Storage Chambers.	3	
Volume of Dry Storage.	35	ft^3
Screen Open Area	75	%

2-3. MATERIALS.

Reinforcing Steel	ASTM A615, Grade 60, deformed.
Precast Concrete Box	Minimum compressive strength of 5,000 psi at 28 days.
Cement	Cement type shall comply with ASTM C150, Type I or II. Water-cementitious materials ratio shall not exceed 0.40. Alternative materials proposed by Contractor that will provide equivalent corrosion protection and durability may be submitted subject to review and acceptance by Engineer.
Aggregates	ASTM C33 or C330, non-reactive for alkali-silica reaction as determined by ASTM C295 or ASTM C1260, and non-reactive for alkali-carbonate reaction as determined by ASTM C295, ASTM C586, or ASTM C1105.
Water	Clean and free from deleterious substances.
Baffles	Minimum compressive strength of 5,000 psi at 28 days.
Nonshrinking Grout	L&M "Crystex", BASF Master Builders "Masterflow 713 " or "Set Grout", Sauereisen Cements "Grout No. F-100 Level Fill Grout", , or Five Star Products "Five Star Grout".
Gaskets	
Mastic	ASTM C990; Hamilton-Kent "Kent-Seal No. 2", , or Henry Company "Ram-Nek". Cross-sectional area as recommended by manhole manufacturer.
Rubber	ASTM C361, Section 6.9, except gasket shall be synthetic, with hardness of 40 ± 5 when measured by ASTM D2240, Type A durometer. Natural rubber will not be acceptable.
Coal Tar Epoxy	High-build coal tar epoxy; Ameron "Amercoat 78HB Coal Tar Epoxy", Carboline "Bitumastic 300M", or

	Tnemec "46H-413 Hi-Build Tneme-Tar".
Corrosion Protection System	As specified herein.
Castings	ASTM A48, Class 35B or better.
Manhole Rings and Covers	Clay and Bailey "No. 2032" or Neenah Foundry "R-1769-A".
Separating Screens	Flattened expanded stainless steel sheets Grade 304
Bolts	Stainless Steel
Framework	Aluminium Angular Beam
Piano Hinge	Stainless Steel
Deflectors	Fiberglass or PVC
Wedge Bolts	Stainless Steel
Backflow Preventer	Fiberglass
Piano Style Hinges	Stainless Steel
Pylon	Fiberglass
Bolts	Stainless Steel

2-4. MANUFACTURE. Precast stormwater treatment devices to be designed to resist traffic loads of H-20. Design drawings and calculations must be signed and sealed by a Professional Engineer in the State of Florida and be submitted for review.

PART 3 - EXECUTION

3-1. INSPECTION. Stormwater treatment devices shall be inspected when delivered for concrete cracking and all cracked or otherwise visibly defective units shall be rejected.

3-2. INSTALLATION AND CONSTRUCTION. Each stormwater treatment device shall be installed in accordance with the Equipment Installation section, the manufacturer's installation recommendations and as specified herein.

3-2.01. Subgrade. The subgrade materials shall be excavated to undisturbed earth and to a uniform elevation which will permit at least 4 inches of granular embedment material, as specified in the Excavation and Fill for Structures section, to be installed and compacted. The surface of the granular material shall be carefully graded and the stormwater treatment device accurately set so

that connecting pipes will be on proper line and grade. The elevation of the granular material shall be adjusted until proper grade and alignment of the device has been attained.

No wedging or blocking under stormwater treatment device will be permitted.

3-2.02. Precast Structure. The precast structure for the stormwater treatment device may be install as top and bottom sections.

3-2.03. Connecting Piping. The connecting pipes from the stormwater treatment device shall use suitable fittings per the pipe material.

3-3. EXTERIOR COATING.

3-3.01. Damproofing. Before backfilling is started, the outside surfaces of each treatment device shall be coated with one heavy coat of dampproofing as specified in the dampproofing section. Surfaces to receive coating shall be dry. Dampproofing may be applied to precast units in the shop. If the shop coating is damaged during construction, a touchup coat shall be applied and allowed to dry prior to backfilling.

3-4. CASTING COATING. Prior to installation, one coat of coal tar epoxy shall be applied to all castings. Before coating, castings shall be thoroughly cleaned and properly supported. All loose rust shall be removed by wire brushing. Castings shall not be handled until the coating is dry and hard.

3-5. FIELD QUALITY CONTROL.

3-5.01. Installation Check. An experienced, competent, and authorized representative of the manufacturer shall visit the site of the Work and inspect, check, adjust if necessary, and approve the equipment installation. The representative shall be present when the equipment is placed in operation in accordance with Section 01650, Startup Requirements, and shall revisit the job site as often as necessary until all trouble is corrected and the equipment installation and operation are satisfactory in the opinion of Engineer.

The manufacturer's representative shall furnish a written report certifying that the equipment has been properly installed and lubricated; is in accurate alignment; is free from any undue stress imposed by connecting piping or anchor bolts; and has been operated under full load conditions and that it operated satisfactorily.

All costs for these services shall be included in the contract price.

3-5.02. Installation Supervision. Installation supervision by the manufacturer is not required.

End of Section

Section 02832

CHAIN LINK FENCES AND GATES

PART 1 - GENERAL

1-1. SCOPE. This section covers chain link fencing and gates. Fencing shall be provided in the alignment indicated on the Drawings and for the following locations:

Existing Outfall
Generator Platform

1-2. SUBMITTALS. Complete detail drawings and specifications for the fence, gates, and accessories shall be submitted in accordance with the Submittals Procedures section.

1-3. DELIVERY, STORAGE, AND HANDLING. Shipping shall be in accordance with the Product Delivery Requirements section. Handling and storage shall be in accordance with the Product Storage and Handling Requirements section.

PART 2 - PRODUCTS

2-1. FENCE TYPES. Fencing shall conform to the details indicated on the Drawings and unless otherwise specified shall be of the following general types.

Location	Fabric	Height
Existing Outfall	Galvanized Steel	Match existing, minimun 6 ft
Generator Platform	Galvanized Steel	Match existing, minimun 6 ft

Fence posts shall be directly driven into the earth, supported by concrete cast into drilled holes, set into sleeves set in concrete structures or cast into concrete structures as detailed on the Drawings.

2-2. MATERIALS.

2-2.01. Steel Fencing. All steel or malleable iron parts and accessories shall be hot-dip galvanized, PVC coated or aluminum coated after fabrication.

Fabric	9 gauge thick, 2 inch mesh. Galvanized per ASTM A392.
Fabric Finish	Knuckled both edges for fabric widths of 60 inches or less. Knuckled one edge and twisted one edge for fabric widths of 72 inches or more.
Posts, Frames, and Rails	SS 40 or Schedule 40 Steel pipe, ASTM F1043, Group IC, with ASTM F1043, Type B or D interior and Type B exterior protective coating.
Line Posts	
For 6 foot and 7 foot fencing	2-3/8 inch OD pipe
For 42 inch fencing	1-7/8 inch OD pipe
Terminal Posts (End, Corner and Pull Posts)	
For 6 foot and 7 foot fencing	2-7/8 inch OD pipe
For 42 inch fencing	1-7/8 inch OD pipe
Top Rails	1-5/8 inch OD pipe
Rail Couplings	Sleeve type, 6 inches long, ASTM F626.
Bracing, required when fence height is greater than 6 feet.	Pipe brace same as top rail, with 3/8 inch diameter steel rod truss and tightener.
Post Tops (with barbed wire)	Pressed steel, malleable iron with pressed steel extension arm, or one-piece aluminum casting, ASTM F626.
Post Tops (without barbed wire)	Pressed steel, malleable iron, or cast aluminum, ASTM F626.
Barbed Wire	Each strand shall consist of two 12.5 gage steel wires with four-point barbs; galvanized per ASTM A121, Class 3, or aluminum coated per ASTM A121.

45 degree extension arms	Three strands of barbed wire mounted on extension arms, upper strand of barbed wire approximately 18 inches out from the fence and 18 inches above the top of the fabric.
Stretcher Bars	Steel, ASTM F626, 3/16 by 3/4 inch, or equivalent area.
Fabric Ties	Aluminum bands or wire, ASTM F626, #9 wire or thicker.
Tension Wire	ASTM A824, galvanized or aluminum coated coil spring wire, 7 gauge .
Handrail-Setting Cement (posts set into concrete structures)	Minwax "Super Por-Rok Cement" or BASF MasterEmaco T 545DOT.
Hog rings	9 gauge steel wire
Coal tar epoxy paint	In accordance with Protective Coatings section

2-2.02. Aluminum Alloy Fencing.

Fabric	Aluminum 6061-T94 wire, 6 gauge , 2 inch mesh.
Fabric Finish	Knuckled both edges for fabric widths of 60 inches or less. Knuckled one edge and twisted one edge for fabric widths of 72 inches or more.
Posts	ASTM B429, aluminum 6063-T6, Schedule 40 pipe.
Line Posts	2-3/8 inch OD pipe
Terminal Posts (End Corner, and Pull)	2-7/8 inch OD pipe, 2 lb/ft
Top Rails	ASTM B429, aluminum 6063-T6, Schedule 40 pipe, 1-5/8 inch OD
Rail Couplings	Outside type, 6 inches long, ASTM F626.
Bracing, required when fence height is greater than 6 feet.	Pipe brace same as top rail, with 3/8 inch diameter aluminum 6061-T6 truss rod and tightener.

Post Tops	Cast aluminum alloy, with hole for top rail, ASTM F626
Barbed Wire	Each strand shall consist of two 0.110 inch diameter wires with barbs at 5 inch centers, aluminum 5052-H38 or 606-1T94.
45 degree extension arms	Three strands of barbed wire mounted on extension arms, upper strand of barbed wire approximately 18 inches out from the fence and 18 inches above the top of the fabric.
Stretcher Bars	Aluminum 6063-T6 or 6061-T6, 1/4 by 3/4 inch, or equivalent area.
Fabric Ties	Aluminum bands or wires, ASTM F626, #9 wire or thicker.
Hog rings	9 gauge steel wire
Tension Wire	Aluminum 6061-T94, 6 gage thick.
Coal tar epoxy paint	In accordance with Protective Coatings section
Handrail-Setting Cement (posts set into concrete structures)	Minwax "Super Por-Rok Cement" or BASF MasterEmaco T 545DOT.

2-2.03. Padlocks. A padlock shall be provided for each gate latch and shall be Schlage "45-102-26D", with two keys. All padlocks shall be keyed alike. Contractor shall provide padlocks compatible with the existing lock system of the Owner and all padlocks shall be operable with the Owner's master key.

2-3. GATES. Gates shall be swing type, hinged to swing an angle of 180 degrees from closed to open, complete with frames, latches, hinges and braces. Stops, keepers, and padlocks shall be provided where specified.

Gate leaves shall have intermediate members and diagonal truss rods where necessary for rigid construction and shall be free from sag or twist. When adjacent fence is topped with barbed wire, gates shall be fitted with vertical extension arms or shall have frame end members extended to carry barbed wire. Joints between frame members shall be made by welding or by means of heavy fittings, and shall be rigid and watertight. Gate fabric shall be same as fence fabric and shall be attached to frame ends by stretcher bars, bolt hooks, or other mechanical means.

Hinges shall be of heavy pattern, with large bearing surfaces, and shall not twist or turn under the action of the gate. Latches shall be plunger bar type, full gate

height, and arranged to engage the gate stop, except single gates less than 10 feet wide shall be provided with a forked latch. Latches shall be arranged for padlocking, with the padlock accessible from both sides of the gate unless detailed on Drawings.

Padlocks shall be installed at the following locations:

Generator pad

PART 3 - EXECUTION

3-1. INSTALLATION. The installed fence shall conform to the alignment and finished grade indicated. All posts shall be plumb. Unless otherwise indicated on the drawings, posts shall be spaced approximately 10 feet apart for plant perimeter and substation fencing and 6 feet apart for wetwell, settling basin, and aeration basin fencing. Where necessary, the fence grade shall be adjusted to fit the ground contour by slipping the fence fabric links. Ground surface irregularities shall be graded to maintain not more than 2 inch clearance below the bottom of the fence fabric.

Where the fencing is supported by a concrete structure, posts shall be set in sleeves that provide at least 1/4 inch annular space. Sleeves shall be fabricated from Schedule 40 black steel pipe and shall be hot-dip galvanized after fabrication. Sleeves shall be 5 inches long unless otherwise indicated on the Drawings. Sleeves shall be rigidly supported in accurate alignment in the forms and shall be positioned vertically so that the top of the sleeve is approximately 1/2 inch below the finished concrete surface. Posts shall be wedged in accurate alignment, and the annular space between posts and sleeves shall be filled with handrail-setting cement to the top of the steel sleeve. Filling of the remaining space with sealant, as indicated on the Drawings.

Where posts are set in earth, concrete foundations 36 inches deep shall be provided. If bedrock is encountered, post excavation shall be continued to the 36 inch depth or 18 inches into the rock, whichever is less. Concrete foundations shall be circular in horizontal section, not less than 10 inches in diameter for line posts, and with a diameter not less than the post OD plus 9 inches for terminal and gate posts, except that foundations in bedrock shall be at least 6 inches larger than the outside dimension of the post. Foundations shall extend above the ground surface and shall be crowned approximately 1 inch. Concrete for foundations shall conform to the Cast-in-Place Concrete section using at least a 3000 psi concrete mix. Each foundation shall be cured for at least 72 hours before further work is done on the post.

Top rails and bottom tension wires shall be installed before the fabric. Top rails shall be furnished in at least 18 foot lengths and shall be securely connected to gate and terminal posts. Tension wires shall be installed approximately 6 inches above grade and shall be attached to each post and securely anchored at terminal and gate posts. Straight runs between braced posts shall not exceed 1,500 feet. A terminal post shall be provided at each change in slope or each change in direction greater than 10 degrees.

Fabric shall be attached to the top rail at 24 inch centers. Fabric shall be attached to the bottom tension wire at 12 inch centers with 9 gauge hog rings. Fabric shall be attached to the line posts at 15 inch centers. Barbed wire, when necessary, shall be fastened to each extension arm by internal clips or external fabric ties. Stretcher bars shall be provided at each gate post and terminal post. Each stretcher bar shall be threaded through the fabric and anchored to the post at 15 inch centers by positive mechanical means.

When necessary, each gate post and terminal post shall be braced by a horizontal pipe brace and an adjustable truss extending to an adjacent line post. Corner posts shall be braced in both directions.

Fabric shall be stretched taut and anchored so that a pull of 150 lbs at the middle of a panel will not lift the bottom of the fabric more than 6 inches.

Interior and exterior surfaces of aluminum which will be in contact with concrete, mortar, or dissimilar metals shall be given a heavy coat of coal tar paint. The end of each aluminum post to be set in concrete shall be dipped in a container of coal tar paint before installation.

End of Section

Section 03100

CONCRETE FORMING

PART 1 - GENERAL

1-1. SCOPE. This section covers formwork for cast-in-place concrete.

Both inch-pound (English) and SI (metric) units of measurement are specified herein; the values expressed in inch-pound units shall govern.

1-2. GENERAL. All forms shall be accurately and properly placed so cast-in-place concrete may be placed as indicated on the Drawings and as specified. The forms shall produce a smooth concrete finish free from offsets or irregularities.

1-3. SUBMITTALS. All submittals of catalog data sheets, manufacturers' certificates of compliance and other data shall be in accordance with the Submittals Procedures section.

A manufacturer's certificate of compliance, which includes the name of the project and, when requested, copies of independent test results confirming compliance with specified requirements, shall be submitted to Engineer for the following materials:

Form Coating
Form Ties

PART 2 – PRODUCTS

2-1. MATERIALS.

Forms

Prefabricated	Simplex "Industrial Steel Frame Forms", Symons "Steel Ply", or Universal "Uni-form".
Plywood	Product Standard PS1, waterproof, resin-bonded, exterior type Douglas fir, face adjacent to concrete Grade B or better.
Fiberboard	ANSI/AHA A135.4, Class 1, tempered, water-resistant, concrete form hardboard.

Lumber	Straight, uniform width and thickness, and free from knots, offsets, holes, dents, and other surface defects.
Chamfer Strips	Clear white pine, surface against concrete planed.
Form Coating	Nonstaining and nontoxic after 30 days. Product shall not exceed VOC limits established by the federal, state, or local regulatory agency having jurisdiction over the project site.

2-2. FORMS. Forms shall be designed to produce hardened concrete having the shape, lines, and dimensions indicated on the Drawings. Forms shall conform to ACI 347R and the following additional requirements.

Stay-in-place metal formwork will not be permitted.

Form-facing materials shall be selected in accordance with ACI 347.3R, based upon the applicable formed concrete surface category. Formed concrete surface categories vary by structure and application, and shall be as indicated in the Concrete Finishing section. Other types of forming materials, such as steel or unlined wood, may be used where plywood or lined forms are not required, and may be used as backing for form linings. Forms for exposed surfaces shall be laid out in a regular and uniform pattern with the long dimension of panels vertical and all joints aligned. The forms shall produce finished surfaces that are free from offsets, ridges, waves, and concave or convex areas, within the tolerances specified herein.

All vertical concrete surfaces above footings shall be formed.

Flat segmented forms not more than 24 inches [600 mm] wide may be used for forming curved surfaces 25 feet [7600 mm] in diameter or larger.

2-2.01. Design. Forms shall be substantial and sufficiently tight to prevent leakage of mortar. Forms shall be braced or tied to maintain the desired position, shape, and alignment during and after concrete placement. Walers, studs, internal ties, and other form supports shall be sized and spaced so that permissible working stresses are not exceeded.

Beams and slabs supported by concrete columns shall be formed so that the column forms may be removed without disturbing the supports for the beams or slabs.

Wherever the top of a wall will be exposed to weathering, the forms on at least one side shall not extend above the top of the wall and shall be brought to true line and grade. At other locations, forms shall be brought to a true line and grade, or a wooden guide strip shall be placed at the proper location on the forms so that the concrete surface can be finished with a screed or template to the specified elevation, slope, or contour. At horizontal construction joints in walls, the forms on one side shall not extend more than 2 feet [600 mm] above the joint.

Temporary openings shall be provided at the bottom of column and wall forms and at other points where necessary to facilitate cleaning and inspection.

2-2.02. Form Ties. Form ties shall have removable end and permanently embedded body, and shall have sufficient strength and rigidity to support and maintain the form in proper position and alignment without the use of auxiliary spreaders. Cones shall be provided on the outer ends of each tie, and the permanently embedded portion shall be at least 1 inch [25 mm] back from the concrete face. Form ties for liquid-containing walls shall be provided with water stop washers located on the permanently embedded portions of the ties at the approximate center of the wall. The ties shall be smooth at the location of the water stop washer; continuously threaded systems will not be acceptable. Permanently embedded portions of form ties without threaded ends shall be constructed so that the removable ends are readily broken off without damage to the concrete. Through-wall tapered removable ties will not be acceptable. The type of form ties used shall be acceptable to Engineer.

Form ties in exposed surfaces shall be uniformly spaced and aligned in horizontal and vertical rows.

2-2.03. Edges and Corners. Chamfer strips shall be placed in forms to bevel all salient edges and corners, except the top edges of walls and slabs which are to be tooled and edges which are to be buried. Equipment bases shall have formed beveled salient edges for all vertical and horizontal corners, unless specifically indicated otherwise on the Drawings. Unless otherwise noted, bevels shall be 3/4 inch [19 mm] wide.

2-3. ARCHITECTURAL CONCRETE. NOT USED.

PART 3 – EXECUTION

3-1. PLACEMENT. The limits of each concrete pour shall be determined by Contractor and shall be acceptable to Engineer.

Before concrete is placed, forms shall be rigidly secured in proper position; all dirt, mud, water, and debris shall be removed from the space to be occupied by concrete; all surfaces encrusted with dried concrete from previous placements

shall be cleaned; and the entire installation shall be acceptable to Engineer. Remove all frost, ice, and snow from within the formwork before concrete is placed.

3-2. TOLERANCES. Tolerances for cast-in-place concrete work shall be as indicated in ACI 347.3R, based upon the relevant formed concrete surface category.

3-3. FORM COATING. All concrete forms shall have form release agent applied to them before placement of concrete.

3-4. FORM REMOVAL. Forms shall not be removed from structures until the concrete in the structures has sufficient strength to support the weight of the structure and any superimposed load, including loads from construction operations. Contractor shall be responsible for limiting any applied loadings. There shall be no evidence of damage to concrete and no excessive deflection or distortion of members due either to the removal of forms or to loss of support.

Supporting formwork (soffit material only) for horizontal members shall not be removed until the concrete has attained at least 75 percent of the specified 28 day compressive strength as determined by cylinders made and cured in the field. Shoring systems for horizontal members shall not be removed until the concrete has attained the full specified 28 day compressive strength, but may be temporarily removed for the purpose of removing the soffit material as permitted above. Shoring shall be left in place and reinforced as necessary to carry any construction equipment or materials placed thereon.

When forms are removed before the specified curing is completed, measures shall be taken to immediately continue curing and to provide adequate thermal protection for the concrete.

3-5. PAN-FORMED JOISTS. NOT USED.

End of Section

Section 03200

CONCRETE REINFORCING

PART 1 – GENERAL

1-1. SCOPE. This section covers reinforcement for cast-in-place concrete.

Both inch-pound (English) and SI (metric) units of measurement are specified herein; the values expressed in inch-pound units shall govern.

1-2. SUBMITTALS.

1-2.01. Drawings and Data. All submittals of drawings, manufacturers' certificates of compliance, certification of reinforcement, reinforcement bar lists, placement drawings, test data, catalog data sheets and other data shall be in accordance with the Submittals Procedures section.

Bar lists and drawings for the fabrication and placing of reinforcement shall be submitted for review and shall have sufficient plans, elevations, and sections to adequately detail and label all reinforcement. The bar lists and drawings shall also include a reference to the structure in which the reinforcement will be installed and to the Drawing showing the reinforcement.

1-2.02. Manufacturer's Certificate of Compliance. A manufacturer's certificate of compliance, which includes the name of the project and, when requested, copies of independent test results confirming compliance with specified requirements, shall be submitted to Engineer for the following materials:

Mechanical connectors

PART 2 – PRODUCTS

2-1. MATERIALS.

Bars, Except Weldable	ASTM A615, Grade 60, deformed. Shear bars shall be Grade 60, smooth.
Bars, Weldable	ASTM A706 or A615, Grade 60, deformed, with maximum carbon equivalent of 0.55%.

Ductile Reinforcing Bars	ASTM A706 or ASTM A615, Grade 60, if the actual yield strength based on mill tests does not exceed the specified yield strength by more than 18,000 psi [124 MPa] (retests shall not exceed this value by more than an additional 3,000 psi [21 MPa]) and the ratio of the actual ultimate tensile strength to the actual tensile yield strength is not less than 1.25.
Column Spirals	ASTM A1064, cold drawn wire.
Welded Wire Fabric	ASTM A1064, Grade 70.
Bar Supports	CRSI Class 1, plastic protected; or Class 2, stainless steel protected. Precast concrete bricks shall not be used without approval of Engineer.
Bars, Epoxy-Coated	ASTM A775, Annex A1, using ASTM A615 and A706 bars only, minimum dry film thickness of 7 mils [178 µm].
Welded Wire Fabric and Steel Wire, Epoxy-Coated	ASTM A884, minimum dry film thickness of 7 mils [178 µm].
Patching Material for the Epoxy Coating	As specified in ASTM A775, Annex A1.
Bar Supports for Epoxy-Coated Reinforcement	Coated wire bar supports, bar supports made of dielectric material, or other acceptable materials. Wire bar supports shall be coated with dielectric material for a minimum distance of 2 inches [50 mm] from the point of contact with the epoxy-coated reinforcing bars. Reinforcing bars used as support bars shall be epoxy-coated. In walls having epoxy-coated reinforcing bars, spreader bars shall be epoxy-coated. Proprietary combination bar clips and spreaders used in walls with epoxy-coated reinforcing bars shall be

	made of corrosion-resistant material or coated with dielectric material.
Mechanical Connectors	Splicing system meeting Type 2 tensile requirements of ACI 318. Products shall have a current evaluation report verifying testing per ICC-ES AC 133.
Threaded Type	Dayton Superior “DBDI Splice System”, or Barsplice Products “Grip-Twist” system,
Locking Type	Dayton Superior “Bar-Lock Coupler” system, or Barsplice Products “Zap Screwlock Type 2 Mechanical Connector” system,
Protective Tape Wrap	Tapecoat "Tapecoat 20".

2-2. REINFORCEMENT. Reinforcement shall be accurately formed and shall be free from loose rust, scale, concrete splatter, and contaminants which reduce bond. Unless otherwise indicated on the Drawings or specified herein, the details of fabrication shall conform to ACI SP-66 and ACI 318. Reinforcement shall not be bent in the field without approval of Engineer.

2-2.01. Splices. Splices shall conform to the details indicated on the Drawings. Splices at locations other than those indicated on the Drawings shall be submitted to Engineer for review and concurrence.

2-2.02. Mechanical Connectors. Mechanical connectors shall be used only as indicated on the Drawings. Connections in adjacent bars shall be spaced at least 30 inches [760 mm] apart.

2-2.03. Welding. Except where indicated on the Drawings, welding or tack welding of reinforcement is not permitted. Preheating and welding shall conform to AWS D1.4. Reinforcement which has been welded improperly or without Engineer's concurrence shall be removed and replaced.

2-2.04. Repair of Epoxy Coating. When epoxy-coated reinforcing bars are specified, before placing epoxy-coated reinforcement in the work, Contractor shall repair all damaged epoxy coatings and shall check the coating for holidays in accordance with the procedures set forth in ASTM A775. All reinforcement shall be free of holidays prior to placement in the work.

Damaged epoxy coating shall be repaired as recommended by the manufacturer using patching material provided by the manufacturer.

Coatings damaged by handling and placing after onsite testing shall be repaired as specified. The maximum amount of damaged coating shall not exceed 0.5 percent of the surface area of each bar.

After completion of welding on epoxy-coated reinforcement, when acceptable to Engineer, damage to the coating shall be repaired as specified. All welds and steel splice members, including mechanical connections when used to splice bars, shall be coated with the same material as used to repair coating damage.

PART 3 – EXECUTION

3-1. STORAGE AND HANDLING. Reinforcing steel shall be carefully handled and shall be stored on supports which prevent the steel from touching the ground.

Epoxy-coated reinforcement shall be handled using equipment with protected contact areas. Bundles or stacks of epoxy-coated reinforcement shall be lifted at multiple points to prevent abrasion from sags. Epoxy-coated reinforcement shall not be dropped or dragged and shall be stored on protective cribbing. Faded or chalking coating will not be cause for rejecting epoxy-coated reinforcement.

3-2. PLACEMENT. Reinforcement shall be accurately positioned on supports, spacers, hangers, or other reinforcement, and shall be secured in place with wire ties or suitable clips. Tolerances shall be as stipulated in ACI 117 and ACI 318 unless otherwise indicated.

Reinforcement at the bottom of concrete slabs and mats shall not be supported from contact with subgrade by the use of metal supports or bent reinforcement.

Where reinforcement in beams is placed in two or more layers, the bars in the upper layer shall be placed directly above the bars in the lower layer.

Reinforcement for beams or slabs which are supported by concrete columns shall not be installed until after the concrete for the column has been placed.

Before concrete is placed, reinforcement shall be rigidly secured in proper position. All surfaces encrusted with dried concrete from previous placements shall be cleaned and the entire installation shall be acceptable to Engineer. Remove all frost, ice, and snow before concrete is placed.

Epoxy-coated reinforcement shall be fastened with nylon, epoxy, or plastic-coated tie wire.

3-3. PLACING CONCRETE. Concrete shall be placed and compacted in wall or column forms before any reinforcement is placed in the system to be supported by such walls or columns.

3-4. DUCT BANKS. All reinforcement and other magnetic materials installed in duct banks shall be installed parallel to the individual ducts, unless they enclose all the ducts of the duct bank.

3-5. STEEL PROTECTION. Steel reinforcement which is to be left exposed for future bonding shall be cleaned and protected from corrosion by painting with two coats of rust-inhibitive primer. Bars shall be painted before adjacent concrete is placed. The coating shall extend 6 inches [150 mm] into the concrete. In addition, bar extensions exposed to weather shall be given a half-lapped layer of protective tape wrap after completion of concrete work.

End of Section

Section 03250

CONCRETE JOINTS AND ACCESSORIES

PART 1 – GENERAL

1-1. SCOPE. This section covers concrete accessories including construction, contraction and expansion joints for cast-in-place concrete.

Dovetail anchor slots shall be as specified in the Masonry section.

Both inch-pound (English) and SI (metric) units of measurement are specified herein; the values expressed in inch-pound units shall govern.

1-2. GENERAL. All accessories shall be accurately placed and all joints shall be accurately and properly constructed so cast-in-place concrete can be placed as specified and as indicated on the Drawings.

1-3. DRAWINGS AND DATA. All submittals of manufacturers' certificates of compliance, test data, reports, catalog data sheets and other data shall be in accordance with the Submittals Procedures section.

PART 2 - PRODUCTS

2-1. MATERIALS.

Metal Waterstops	
Carbon steel	Uncoated, 12 gage minimum thickness, size as indicated on the Drawings.
Stainless steel	ASTM A480/A666, Type 304 or 316, 14 gage minimum thickness, size as indicated on the Drawings.
PVC Waterstops	Extruded, virgin, elastomeric, polyvinyl chloride (PVC), white (no pigment), ribbed, 3/8 inch min thick. Reclaimed material will not be acceptable. Provide hog rings or grommets spaced at 12 inches on center entire length.
6 inches wide, at construction joints	Greenstreak “679” or Vinylex “R638”.

9 inches wide, at construction joints	Greenstreak “646” or Vinylex “R938”.
6 inches wide, at control joints	"O" bulb closed center section; Greenstreak "732" or Vinylex "RB638H".
9 inches wide, at control joints	"O" bulb closed center section; Greenstreak "735" or Vinylex "RB938H".
TPV Waterstops	Extruded, virgin, thermoplastic vulcanizate (TPV), black. Ribbed; center bulb. Ozone resistance – no cracking at 450 pphm per ASTM D1171.
6 inches wide	3/16 min thick; minimum 0.5 lbs/ft [0.75 Kg/m]. J.P. Specialties “Earth Shield – Part No. 636” or Westec “Style 619”.
9 inches wide	3/16 inches min thick, minimum 0.8 lbs/ft. J.P. Specialties “Earth Shield – Part No. 936” or Westec “Style 620”.
Expandable Waterstops, permitted only at locations indicated on Drawings	
For concrete sections that are at least 10 inches thick and 6 feet high, and with at least two layers of reinforcement	Hydrophilic; bentonite free, chemically modified rubber. Adeka "Ultra Seal MC-2010MN" or Greenstreak "Hydrotite CJ-1020-2K". Adhesive and sealant as recommended by the manufacturer.
For other concrete sections	Hydrophilic; chemically modified rubber. Adeka "KBA-1510FP" or Greenstreak "Swellstop". Adhesive and sealant as recommended by the manufacturer.
Expansion joint materials	
Filler	Preformed sponge rubber, ASTM D1752, Type I.
Filler adhesive	As recommended by manufacturer.
Sealant	As specified in the Joint Sealants section.

Polyethylene film	NBS Product Standard PS17 or ASTM D4397, 6 mils or thicker.
Vapor retarder and seam tape	Polyolefin membrane, 15 mil min, ASTM E1745, Class A, with maximum water vapor permeance of 0.02 perms. Stego Industries “Stego Wrap 15 Mil”, Raven Industries “Vaporblock 15”, Reef Industries “Griffolyn 15 Mil Green”, W.R. Meadows “Perminator 15”, Insulation Solutions “Viper VaporCheck II”. Manufacturer recommended seam tape and pipe boots.
Bearing pads	Preformed cotton duck reinforced pads, at least 1/4 inch thick; JVI "Capralon" or Voss Engineering "Sorbtex".
Epoxy bonding agent	As specified in Concrete Placing section.
Wedge inserts	Malleable iron, with galvanized askew-head bolts, nuts, and washers; Hohmann and Barnard "HW", Richmond "Peerless", or Weston "WC50".

PART 3 - EXECUTION

3-1. CONSTRUCTION JOINTS. Construction joints shall be made at locations indicated on the Drawings or where specified. Construction joints shall not be made at other locations without the concurrence of Engineer.

3-1.01. Location. Construction joints shall be located as follows:

a. In Columns and Walls. At the underside of beams, girders, haunches, drop panels, and column capitals, and at floor levels. All haunches, drop panels, and column capitals shall be considered part of the supported floor or roof and shall be placed monolithically therewith. Column bases will not be required to be monolithic with the floor beneath. Walls shall be divided into sections not to exceed 60 feet, except at corners which shall be as indicated on the Drawings. Walls supporting beams shall have pockets blocked out so that the full beam cross section penetrates the full thickness of the wall. Where waterstops are required in the joint, the wall pocket shall be widened and deepened to prevent interference between the waterstop and the beam reinforcement.

b. In Beams and Girders. Within the middle third of the span, unless a beam intersects a girder at this point, in which case the joint in the girder shall be offset by twice the width of the beam. Provisions for the transfer of shear and other forces through the construction joint shall be acceptable to Engineer. Members shall be divided into pour sections not greater than 60 feet in length.

c. In Suspended Slabs. At or near the center of the span in flat slab or T-beam construction. No joint will be permitted between a slab and a concrete beam or girder unless specifically required by the Drawings. Suspended floor systems shall be divided by construction joints into approximately square sections not to exceed 60 feet in their longest dimension.

d. In Bottom Slab. Each bottom slab shall be divided into approximately square sections not to exceed 60 feet in their longest dimension.

Construction joints in beams, girders, joists, and slabs shall be perpendicular to the planes of their surfaces.

3-1.02. Watertight Joints. Construction joints in the following locations shall be watertight and shall be provided with continuous waterstops.

a. For liquid-containing structures, provide in slabs below the liquid surface elevation, and in all perimeter walls to their full height.

b. For liquid-containing structures, provide in divider walls where it is possible for one side or “cell” to be out of service while the other remains liquid-containing.

c. For filters and clear water reservoirs, provide in all walls, base slabs, and top slabs.

d. Provide in other locations specifically indicated on the Drawings.

3-2. EXPANSION AND CONTRACTION JOINTS. Expansion joint filler shall be firmly bonded to the previously poured joint face with a suitable adhesive, and the new concrete shall be poured directly against the joint filler. Accessible edges of each expansion and contraction joint shall be sealed as specified in the caulking section.

3-3. WATERSTOPS.

3-3.01 Placement. Each waterstop shall be continuous throughout the length of the joint in which it is installed. Waterstops shall be clean, free from coatings,

and shall be maintained in proper position until surrounding concrete has been deposited and compacted. Waterstop embedment shall be equal on both sides of the joint.

Expandable waterstops shall be located as nearly as possible to the center of the joint and shall not be installed when air temperature falls outside the manufacturer's recommended range.

3-3.02. Storage and Handling. Expansion joint filler and elastomeric (PVC or TPV) waterstops shall be stored in a cool place protected from direct sunlight.

Metal waterstops shall be handled, transported, delivered, and stored in a manner which will prevent bends, dents, or corrosion.

3-3.03. Splices. Junctions between adjacent sections of metal waterstops shall be lapped 5 inches and securely bolted, screwed, or spot welded together.

Junctions between adjacent sections of elastomeric (PVC or TPV) waterstops shall be spliced in strict conformity with the recommendations of the manufacturer. Directional changes and intersections shall be factory fabricated by the waterstop manufacturer prior to delivery to the Site. Field splices will be acceptable only in straight sections.

Expandable waterstops shall be contact lapped a minimum distance of 8 inches. Voids shall be filled with sealant.

Where an expandable waterstop is used in combination with metal or PVC water stops, the expandable water stop shall be placed in contact and shall overlap a minimum distance of 12 inches. Voids shall be filled with sealant.

3-4. PLACEMENT. The limits of each concrete pour shall be determined by Contractor and shall be acceptable to Engineer.

3-5. EMBEDMENTS. Anchor bolts, castings, steel shapes, conduits, sleeves, masonry anchors, and other objects that are to be embedded in the concrete shall be accurately positioned in the forms and securely anchored.

Unless installed in pipe sleeves, anchor bolts shall have sufficient threads to permit a nut to be placed on the concrete side of the form or template. A second nut shall be placed on the other side of the form or template, and the two nuts shall be so adjusted that the bolt will be held rigidly in proper position.

3-6. DUCT BANK JOINTS. Hardened surfaces that are to receive additional concrete shall be prepared by removing all loose particles, scum, and laitance so that the aggregate is exposed. The hardened surface shall then be thoroughly

wetted and a thin coating of neat cement mortar shall be spread over the entire surface just before the fresh concrete is placed. The fresh concrete shall be puddled and spaded to eliminate any honeycomb or lack of mortar near the joint.

3-7. PLACEMENT AGAINST SUBGRADE. Where concrete is placed against rock, all loose pieces of rock shall be removed and the exposed surface cleaned with a high-pressure water spray.

3-7.01. Polyethylene Film. Where concrete is placed against gravel or crushed rock which does not contain at least 25 percent material passing a No. 4 [4.75 mm] sieve, such surfaces shall be covered with polyethylene film. Joints in the film shall be lapped at least 6 inches and taped.

3-7.02. Vapor Retarder. Vapor retarder shall be installed at the locations indicated on the Drawings. Installation shall be in accordance with ASTM E1643 and the manufacturer's recommendations. Joints in the retarder shall be sealed with waterproof sealing tape. Care shall be exercised to avoid tearing or puncturing the retarder. Any damage shall be promptly repaired, and the retarder shall be inspected for damage immediately before the concrete is placed.

3-8. BEARING PADS. Wherever a concrete beam is supported by a concrete bracket, a bearing pad shall be placed in the joint between the beam and the bracket.

End of Section

Section 03300

CAST-IN-PLACE CONCRETE

PART 1 - GENERAL

1-1. SCOPE. This section covers procurement of all cast-in-place concrete, including concrete materials, limiting requirements, mixture design, and performance requirements, and delivery to the Site through discharge at the end of the delivery truck chute.

Work beyond the end of the delivery truck chute is covered in the Concrete Forming, Concrete Joints and Accessories, Concrete Reinforcing, Concrete Placing, Concrete Finishing, and Concrete Curing sections.

Both inch-pound (English) and SI (metric) units of measurement are specified herein; the values expressed in inch-pound units shall govern.

1-2. GENERAL. All cast-in-place concrete shall conform to the limiting requirements of this specification including Table 1.

1-2.01. Concrete Classifications. Concrete classifications shall be defined and used as indicated for the following classes:

Concrete Classifications

Class	Class Description
A.	Structural Concrete
A1.	Concrete for Liquid-Containing Structures. Concrete for liquid-containing environmental structures, liquid-containing tanks, interior suspended slabs in high humidity areas, headwalls, chemical storage or containment areas, below grade structures exposed to groundwater under normal conditions, and all other concrete not otherwise indicated.
A2.	Small Aggregate Concrete; Congested Areas. Structural small aggregate concrete shall be used in all areas (including liquid-containing structures) where the clear distance between reinforcement, conduit, or embedded items is less than the largest dimension of coarse aggregate particles in the structural concrete.

A3. Concrete for Non-Liquid-Containing Structures. Concrete for footings, foundations, manholes, catch basins, pan-formed joists, and all other structural concrete other than for liquid-containing structures.

A4. Mortar Puddle. Placed in a lift 2 inches or more deep at the bottom of forms for walls and columns immediately before structural concrete is placed.

A5. Drilled Pier Concrete. Placed in drilled piers, lined or unlined. Not to be used as grout for pressure-grouted augured piles.

B. Exterior Flatwork Concrete. Concrete for exterior slabs on grade, plant pavement, sidewalks, curbs and gutters, and small equipment pads.

C. Architectural Concrete. Concrete whose appearance is of higher importance; which may have coloring or a special surface texture.

D. Miscellaneous Concrete

D1. Ductbanks, Pipe Blocking, Concrete Fill, and Pipe Encasement Concrete. Concrete used in ductbanks, pipe blocking, concrete fill and pipe encasements.

D2. Underwater Concrete. Concrete used for underwater sealing, tremie slabs, underwater work slabs, underwater concrete fill, or cofferdam ballast. Unless otherwise permitted by Engineer, concrete shall not be deposited underwater.

D3. Mass Concrete. Concrete areas with unusually thick sections that may be subject to detrimental thermal effects during hydration and curing.

D4. Pan Stairs Concrete. Concrete used to fill architectural, steel pan stair treads.

D5. Wash Water Trough Concrete. On-site placement of concrete wash water troughs.

D6. Composite Topping Concrete. Concrete placed as a cap over a properly prepared concrete subsurface, placed as a topping over precast hollowcore or double tee sections, or used for repair, leveling, raising a finished surface elevation.

D7. Lean Concrete. Used as a fill material for over-excavations or for mud slabs below foundations. Controlled Low-Strength Material (CLSM) used as an easily removable fill material is covered in the Excavation and Fill for Structures section.

1-3. SUBMITTALS. All data shall be submitted in accordance with the Submittals Procedures section, unless otherwise specified herein.

The required submittal data for each Class of concrete shall be as indicated in Tables 2A, 2B, and 2C.

1-3.01. Preliminary Review of Materials. Reports covering the source and quality of concrete materials proposed for the work shall be submitted to Engineer for review within 30 days after the preconstruction conference.

A manufacturer's certificate of compliance, which includes copies of independent test results confirming compliance with specified requirements, shall be submitted for the following materials:

Cement.

Admixtures.

Fly Ash.

Slag Cement.

Fibers.

1-3.02. Proposed Mixture Proportions. Data indicating the proposed material quantities in each Class of concrete shall be submitted to Engineer for review within 30 days after the preconstruction conference.

1-3.03. Field Test Record Data. Concrete mixture field test record performance data shall be submitted to Engineer for review and acceptance. Field test record data shall be acceptable only for the Classes of concrete indicated as such in Table 2C.

1-3.04. Laboratory Trial Mixture Test Results. Laboratory trial mixture testing shall not begin until materials and proposed mixture proportions have been reviewed and are acceptable to Engineer. Trial mixture testing shall be performed for all Classes of concrete where field test record data is not acceptable as a means of qualifying the mixture.

1-4. STORAGE AND HANDLING. Cement, slag cement and fly ash shall be stored in suitable moistureproof enclosures. Cement, slag cement and fly ash which have become caked or lumpy shall not be used.

Aggregates shall be stored so that segregation and the inclusion of foreign materials are prevented. The bottom 6 inches of aggregate piles in contact with the ground shall not be used.

PART 2 - PRODUCTS

2-1. LIMITING REQUIREMENTS. Unless otherwise specified, each concrete mixture shall be designed and controlled, within the following limits, to provide a dense, durable concrete suitable for the expected service conditions.

Concrete materials shall be selected and concrete shall be proportioned, batched, mixed, and delivered in a manner that will minimize shrinkage and cracking as specified herein, and in accordance with Chapters 3 and 8 of ACI 224R. Concrete temperatures shall be controlled before and until delivery at the end of the delivery truck chute to minimize cracking. Any rise in concrete temperature caused by environmental conditions that will be conducive to excessive shrinkage shall be controlled.

For each class of concrete, each concrete mixture shall be designed and concrete shall be controlled within the limits in the specification and in Table 1.

2-1.01. Cementitious Material Content Limits. The minimum quantity of Portland cement in the concrete shall be as indicated in Table 1.

The cementitious material content shall not be increased beyond the Table 1 values more than necessary to achieve the required f'_{cr}.

Contractor may substitute fly ash for Portland cement within the percentage ranges indicated in Table 1, on the basis of 1.0 lbs of fly ash added for each lb of Portland cement reduction.

Contractor may substitute slag cement for Portland cement within the percentage ranges indicted in Table 1 on the basis of 1.0 lbs of slag cement added for each lb of Portland cement reduction.

Mixtures using slag cement in combination with fly ash will not be acceptable.

2-1.02. Maximum Water-Cementitious Material Ratio. The maximum water-cementitious material ratio shall be on a cement mass basis, or, if fly ash or slag cement is used, the combined mass of cement plus fly ash or slag cement shall

be used to determine the water-cementitious materials ratio. Limiting maximum water-cementitious material ratios are indicated in Table 1.

2-1.03. Aggregates. Aggregates shall comply with ASTM C33 except as specified herein. Fine aggregate shall be clean natural sand. Artificial or manufactured sand shall not be used unless acceptable to Engineer. Coarse aggregate shall be crushed rock, washed gravel, or other inert granular material, meeting Class 4S requirements, except that clay and shale particles shall not exceed values indicated in Table 1.

Gradation of coarse aggregate shall conform to maximum nominal size grading requirements of ASTM C33. When a combination of two or more sizes is used, the combined gradation shall meet ASTM C33 requirements.

Aggregates used in concrete shall have a combined aggregate distribution similar to the aggregates used in the concrete trial mixtures. Reports of individual aggregates shall include sieve sizes 1-1/2 inch, 1 inch, 3/4 inch, 1/2 inch, 3/8 inch, No. 4, No. 8, No. 16, No. 30, and No. 50 in accordance with ASTM E11.

Specified sand equivalent for fine aggregate shall be not less than indicated in Table 1 for an average of 3 samples tested in accordance with ASTM D2419.

To comply with the specified concrete shrinkage test requirements, the clay and shale content of the aggregates may need to be reduced by washing the aggregate.

2-1.04. Ratio of Fine to Total Aggregates. The ratio of fine to total aggregates, based on solid volumes (not weights), shall be as follows:

Maximum Nominal Coarse Aggregate Size	Minimum Ratio	Maximum Ratio
3/8 inch	0.45	0.60
1/2 inch	0.40	0.55
3/4 inch	0.35	0.50
1 inch	0.30	0.46
1-1/2 inch	0.25	0.40

2-1.05. Slump. Concrete slump shall be kept as low as possible, consistent with proper handling and thorough consolidation. Prior to the addition of admixtures,

slump shall be at least 2 inches and shall not exceed the maximum slump as indicated in Table 1.

When superplasticizer is dispensed at the ready-mix plant, the concrete mixture design shall be based on a maximum slump as indicated in Table 1. When superplasticizer is dispensed at the Site, the slump of the concrete delivered shall not exceed the maximum slump as indicated in Table 1 before superplasticizer is added.

2-1.06. Initial Set. The initial set, as determined by ASTM C403, shall be attained 5-1/2 hours ±1 hour after the water and cementitious materials are added to the aggregates for each concrete mixture. The quantity of retarding admixture shall be adjusted to compensate for variations in temperature and job conditions.

2-1.07. Total Air Content. The total volumetric air content of concrete after placement shall be as indicated in Table 1, and within ±1.5 percent. Air-entraining admixture may be omitted from concrete for interior slabs which are to be steel trowel finished.

2-1.08. Admixtures. Only approved or specified admixtures shall be used.

Unless otherwise acceptable to Engineer, all admixtures shall be from one manufacturer and shall be compatible. Admixtures that are compatible with other admixtures and concrete materials shall not have an adverse affect on the required properties of the concrete nor the specified limiting requirements. The admixture content, batching method, and time of introduction to the mixture shall comply with these specifications and with the manufacturer's recommendations for minimum shrinkage. The admixture manufacturer shall provide qualified field services as necessary, at no additional cost to Owner.

Admixtures used in the concrete shall be reviewed and accepted by Engineer prior to conducting the laboratory trial mixture testing and the shrinkage testing. No calcium chloride nor admixture containing chloride from sources other than residual impurities in admixture ingredients will be permitted.

Combination of admixtures which cause premature or local dehydration or post-compaction settlement of the concrete surface shall not be used. If any such undesirable characteristics are observed, the use of the mixture shall be discontinued and an alternate mixture design used.

All liquid-containing (Class A1) concrete, and small aggregate (Class A2) concrete that is placed in liquid-containing structures, shall include a high-range water reducing admixture (superplasticizer). Water-reducing admixtures are not required for Classes D1 and D7, but may be included at Contractor’s option. For

all other non-liquid-containing concrete, a water-reducing admixture shall be used.

Superplasticizer may be dispensed into the concrete at the plant or on the Site and shall be mixed in accordance with the admixture manufacturer's recommendations. Each superplasticizer dose, when dispensed at the Site, shall be easily verifiable and recorded on the delivery ticket. The superplasticizer for each load shall be accurately proportioned into a separate container prior to dispensing the admixture into the concrete. When truck-mounted dispensers are used, the system shall not be flushed or cleaned with water until after the entire load of concrete has been discharged. When permitted by Engineer, redosing of concrete with superplasticizer shall be done only once. Redosing procedures shall be as recommended by the admixture manufacturer.

A shrinkage reducing admixture may be added to Class A1 concrete. It shall replace an equal volume of mixing water or as otherwise recommended by the admixture manufacturer. The quantity of air entrainment admixture shall be adjusted as required by the admixture manufacturer to keep mixture air content within specified limits.

2-1.09. Fiber Concrete. Fiber concrete shall be used only where noted on the Drawings. Polypropylene micro fibers shall be added to the concrete materials at the time the materials are batched at the rate of 1.5 lbs/cu yd. Batching and mixing procedures shall be in accordance with the manufacturer's recommendations. Fibers shall be randomly oriented and uniformly distributed throughout the concrete.

2-1.10. Strength. In addition to the other limiting requirements to achieve durability and minimize shrinkage, the minimum acceptable compressive strengths of concrete tested at the end of the delivery truck chute, as determined by ASTM C39, shall be as indicated in Table 1.

Adequate test cylinders taken at the point of placement shall also be made to verify that Contractor's concreting procedures comply with applicable industry standard procedures.

2-1.11. Pumped Concrete. Coarse aggregate size for pumped concrete mixtures shall be limited to a nominal maximum of 1-1/2 inch.

2-1.12. Water-Soluble Chloride. Maximum water-soluble chloride ion concentrations in hardened concrete at an age of 28 days shall not exceed the limits expressed as a percentage of mass of cementitious materials as indicated in Table 1.

Test results shall be reported as the percentage of water-soluble chloride ions in the concrete and as a percentage of chloride ion relative to the mass of cementitious materials in the concrete.

Testing of the concrete components for water-soluble chloride ions may be done at the discretion of Contractor. Copies of the reports on such tests shall be furnished to Engineer.

The hardened concrete and each gradation of aggregate used in the concrete shall be tested each time a chloride ion test is conducted on a concrete mixture.

2-1.13. Laboratory Shrinkage Limits. Based on the modified ASTM C157 test procedures as specified herein, the shrinkage limits of concrete shall be the average drying shrinkage of each set of three test specimens cast in the laboratory from a trial mixture as measured at the 21 days drying age, and shall not exceed the values in Table 1.

2-1.14. NSF 61 Compliance. All liquid-containing (Class A1) concrete, small aggregate (Class A2) concrete, and concrete fill (Class D1) that is used in structures that will contain potable water shall comply with NSF/ANSI 61 – Drinking Water System Components – Health Effects.

Where NSF 61 compliance is required all constituent materials shall be NSF 61 compliant including mix water, aggregates, admixtures, and all cementitious materials. Alternately a cylinder test shall be performed for each mixture requiring NSF 61 compliance. Cylinder testing shall follow NSF 61 protocol for cast-in-place cylinder tests and evaluation.

2-1.15. Mineral Colored Concrete. Mineral colored concrete shall be used where indicated on the Drawings. The color of the concrete shall be as noted on the Drawings. The quantity of mineral coloring admixture added shall be as recommended by the color admixture manufacturer for a deep, intense color tone.

2-1.16. Cold Weather Concrete. Except as modified herein, cold weather concrete shall comply with ACI 306.1. The temperature of concrete at the point of delivery at the end of the delivery truck chute shall be not less than that indicated in ACI 306.1 for corresponding outdoor temperature (in shade) at the time of placement.

When delivered, heated concrete shall be not warmer than 80°F.

2-1.17. Hot Weather Concrete. Except as modified herein, hot weather concrete shall comply with ACI 305.1. At air temperatures of 90°F or above, concrete shall be kept as cool as possible before and during delivery. The temperature of

the concrete at the time of delivery at the end of the delivery truck chute shall not exceed the values indicated in Table 1.

2-2. MATERIALS.

Cement	ASTM C 150, Type I, Type II, or Type I/II. Low Alkali.
Fly Ash	ASTM C618, except that loss on ignition shall not exceed 4 percent. Class F or Class C are acceptable, but Class C shall also be qualified for moderate sulfate resistance as described in ASTM C618, Table 3, Procedure A. The test for sulfate resistance shall be in accordance with ASTM C1012.
Slag Cement	ASTM C989, Grade 100 or Grade 120.
Aggregates, Fine and Coarse	As specified in Limiting Requirements paragraph.
Water	Potable. Water from concrete production operations shall not be used.
Admixtures	
Water Reducing/Normal Set	ASTM C494, Type A, except as otherwise specified herein.
Water Reducing/Retarding	ASTM C494, Type D, except as otherwise specified herein.
Air-Entraining	ASTM C260.
High Range Water Reducing/Normal Set	ASTM C494, Type F, extended slump life type, except as otherwise specified herein.

High Range Water Reducing/Retarding	ASTM C494, Type G, extended slump life type, except as otherwise specified herein.
Shrinkage Reducing Admixture	GCP Applied Technologies (Grace) “Eclipse 4500”, Euclid “Eucon SRA”, or BASF “MasterLife SRA 035”. These admixtures may not be usable in mixtures that require NSF 61 certification.
Mineral Coloring	Nonfading mineral coloring unaffected by sunlight or free alkali; Davis Colors "Mix-Ready", L.M. Scofield "Chromix", or Euclid “Super Concentrated Mortar Color”.
Fibers	Collated, fibrillated, polypropylene fibers; Propex “Fibermesh”, Forta “Mighty-Mono”, or GCP Applied Technologies (Grace) “MicroFiber”.

2-3. MIXTURE DESIGN AND TESTING. As stipulated in the Quality Control section, all reports and tests required for preliminary review of materials and for laboratory trial mixtures shall be made by an independent testing laboratory at the expense of Contractor. Mixtures shall be adjusted in the field as necessary, within the limits specified, to meet the requirements of these specifications. If the source of any concrete materials is changed during the contract, concrete work shall pause until the new materials and the new mixture design are tested in accordance with the specified requirements.

2-3.01. Preliminary Review of Materials. The tests and reports required shall be as indicated in Table 2A. Review of these reports shall be for general acceptability only, and continued compliance with all contract provisions shall be required.

Aggregate reports shall be no more than 90 days old at time of submittal.

Alkali-aggregate reactivity potential shall be determined by one of the following procedures. A satisfactory service record evaluation as described in ASTM C33 will not be acceptable.

1 Test fine and coarse aggregates in accordance with ASTM C1260. Aggregates which are classified as innocuous may be used without further testing. Aggregates which are not innocuous shall be further

tested in accordance with ASTM C227 or C1105 (as appropriate), using a cement containing less than 0.6 percent alkalies.

2 Test fine and coarse aggregates in accordance with ASTM C1567, using a single aggregate with all cementitious materials selected for the Project. The fine and coarse aggregates shall not be combined and used in a single test. This test may only be used for mixtures that contain slag cement or fly ash, and those products shall not have an alkali content greater than 4.0 percent sodium oxide equivalent. Combinations of cementitious materials and aggregate which do not indicate a potential for alkali reactivity may be used without further testing. Mixture combinations which indicate a potential for alkali reactivity shall have the ingredients and/or proportions modified and then the test shall be repeated.

3 Test fine and coarse aggregates in accordance with ASTM C1293. Concrete mixtures containing only portland cement (without pozzolan or slag cement) shall be tested accordingly and have a measured expansion of 0.04 percent or less at one year duration. Concrete mixtures containing pozzolan or slag cement shall be tested with those ingredients in proportions matching that of the proposed mixture, and shall have a measured expansion of 0.04 percent or less at two years duration.

At the discretion of Engineer, testing in addition to that indicated herein or in Appendix X1 of ASTM C33 may be performed on potentially reactive aggregates. Nonreactive aggregates shall be imported if, in the opinion of Engineer, local aggregates exhibit unacceptable potential reactivity.

2-3.02. Proposed Mixture Proportions. Proposed proportions for each Class of concrete shall meet the limiting requirements indicated herein.

2-3.03. Mixture Testing. Test results on each Class of concrete shall be submitted for review and shall be acceptable to Engineer before concrete work is started. The reports shall include the information indicated in Table 2C.

2-3.03.01. Field Test Record Data. If indicated as acceptable in Table 2C, concrete mixtures may be qualified based upon field test record performance data in lieu of laboratory trial mixtures. Field test data records shall be from the production facility being used on the current Project and shall have been performed in the past 12 months. Field test records shall represent a single group of at least 10 consecutive strength tests for one mixture, using the same materials, under the same conditions, and encompassing a period of not less than 45 days.

2-3.03.02. Laboratory Trial Mixture Testing. Trial mixtures shall be tested in the laboratory for each size and combined gradation of aggregates and for each consistency as indicated and intended for use on the work and as specified.

Concrete ingredients shall be measured and mixed in the laboratory. Concrete test specimens shall be made, cured, and stored in accordance with ASTM C192 and tested in accordance with ASTM C39.

Concrete proportions shall be established based on laboratory trial mixtures that meet the following requirements:

a. The combination of materials shall be as proposed for use in the work.

b. Mixtures shall conform with the limiting requirements specified herein.

c. The required average compressive strength, f'_{cr}, of the trial mixture shall exceed the specified minimum acceptable compressive strength, f'_{cr}, as required in Table 1.

d. Trial mixtures of the proportions and consistencies specified for the work shall be prepared. When a three point curve is required by Table 2C, the three concrete trial mixtures shall reflect the cement content proposed for the Project and for the indicated concrete class at three water-cementitious material ratio contents at or lower than indicated in Table 1. The compressive strength of the cylinders made from the three trial mixtures shall produce a range of compressive strengths exceeding or encompassing the f'_{cr} required for the work.

e. For each proposed concrete mixture that is required to be tested as indicated in Table 2C, compressive strength test cylinders shall be made for each testing age. Each change in the water-cementitious materials ratio shall be considered a new concrete mixture. Each mixture shall be tested at the ages of 7 days and 28 days.

f. When a three point curve is required in Table 2C, the results of the cylinder tests for each water-cementitious materials ratio at each age shall be plotted as a curve showing the relationship between compressive strength (along y-axis) and the water-cementitious materials ratio (along x-axis). The water-cementitious materials ratio and the associated average compressive strength for the Project concrete mixture shall be selected from the 28 day curve. The maximum water-cementitious materials ratio specified in the

limiting requirements shall still apply even if the curve indicates that the concrete strength would be adequate at a higher ratio. The cement content and mixture proportions to be used shall be such that the selected water-cementitious materials ratio will not be exceeded at specified maximum slump. These concrete mixture proportions shall be submitted for review in accordance with the Submittals Procedures section.

g. When a shrinkage reducing admixture is proposed, trial mixtures shall be prepared with and without the shrinkage reducing admixture.

2-3.03.03. Testing Procedures. Concrete mixture testing procedures shall be as specifier herein, and reports for these tests shall be prepared specifically for this Project.

Aggregates shall be sampled and tested in accordance with ASTM C33. The bulk specific gravity of each aggregate shall be determined in accordance with ASTM C127 and ASTM C128.

Slump shall be determined in accordance with ASTM C143. Unit weight (mass) shall be determined in accordance with ASTM C138. Total air content shall be determined in accordance with ASTM C231 and verified in accordance with ASTM C138. Concrete temperature shall be determined in accordance with ASTM C1064.

Initial set tests shall be made at ambient temperatures of 70°F and 90°F to determine compliance with the specified time for initial set. The test at 70°F shall be made using concrete containing the specified normal set/water-reducing admixture and, when required, air-entraining admixture. The test at 90°F shall be made using concrete containing the specified retarding/water-reducing admixture and, when required, air-entraining admixture. Initial set shall be determined in accordance with ASTM C403.

Cylinders shall be 6 inches diameter by 12 inches high for concrete mixes using a maximum nominal aggregate size of 1 inch or larger. Cylinders may be either 6 inches diameter by 12 inches high, or 4 inches diameter by 8 inches high for concrete mixes using a maximum nominal aggregate size of less than 1 inch. The average compressive strength shall be determined from the results of at least three cylinders when using 4 inch diameter cylinders, and at least two cylinders when using 6 inch diameter cylinders. All tests for a particular class of concrete shall be performed using the same sized cylinders for the duration of the work.

Water-soluble chloride ion shall be determined in accordance with ASTM C1218.

A drying shrinkage test shall be conducted on the trial mixture with the maximum water-cementitious materials ratio used to qualify each proposed concrete mixture design using the concrete materials, including admixtures, that are proposed for the Project. Three test specimens shall be prepared for each test. Drying shrinkage specimens shall be 4 inch by 4 inch by 11 inch prisms with an effective gauge length of 10 inches, fabricated, cured, dried, and measured in accordance with ASTM C157 except with the following modifications:

Specimens shall be removed from the molds at an age of 23 hours ±1 hour after batching, shall be placed immediately in water at 73°F ±3°F for at least 30 minutes, and shall be measured within 30 minutes thereafter to determine original length and then submerged in lime-saturated water as specified in ASTM C157. Measurement to determine expansion expressed as a percentage of original length shall be taken at age 7 days. The length at 7 days shall be the base length for drying shrinkage calculations ("zero" days drying age). Specimens then shall be stored immediately in a humidity controlled room maintained at 73°F ±3°F and 50 percent ±4 percent relative humidity for the remainder of the test. Measurements to determine shrinkage expressed as a percentage of the base length shall be reported separately for 7, 14, and 21 days ±4 hours of drying from "zero" days after 7 days of moist curing for a total of 28 days from the date of casting.

Drying shrinkage deformation for each specimen shall be computed as the difference between the base length (at "zero" days drying age) and the length after drying at each test age. Results of the shrinkage test shall be reported to the nearest 0.001 percent. If drying shrinkage of any specimen deviates from the average for that test age by more than 0.004 percent, the results for that specimen shall be disregarded.

The average drying shrinkage of each set of 4 inch by 4 inch by 11 inch test specimens made in the laboratory from a trial mixture shall not exceed the values required in Table 1.

2-4. ARCHITECTURAL CONCRETE. NOT USED.

PART 3 – EXECUTION

3-1. BATCHING, MIXING, AND DELIVERY. Concrete shall be furnished by an acceptable ready-mixed concrete supplier, and shall conform to ASTM C94 except as indicated otherwise in this specification.

3-1.01. Delivery Tickets. A delivery ticket shall be prepared for each load of ready-mixed concrete and a copy of the ticket shall be handed to Engineer by the truck operator at the time of delivery. Tickets shall indicate the name and

location of Contractor, the project name, the mixture identification, the quantity of concrete delivered, the quantity of each material in the batch, the outdoor temperature in the shade, the time at which the cementitious materials were added, and the numerical sequence of the delivery.

3-1.02. Mixing Water. Mixing water shall not be added in transit. Any amount of water withheld from the truck mixer shall be clearly indicated on the delivery ticket. Water added at the site shall not exceed the amount withheld, and shall not be added without oversight by Owner's on site inspector.

3-1.03. Consistency. The consistency of concrete shall be suitable for the placement conditions. Aggregates shall flow uniformly throughout the mass, and the concrete shall flow sluggishly when vibrated or spaded. The slump shall be kept uniform.

3-2. CONTRACTOR'S ON GOING MATERIAL CONTROL TESTING. The following tests and test reports are required during the progress of the work and shall be made at the expense of Contractor. The frequency specified herein for each field control test is approximate and subject to change as determined by Engineer.

3-2.01. Aggregate Gradation. Each 200 tons of fine aggregate and each 400 tons [360 Mg] of coarse aggregate shall be sampled and tested in accordance with ASTM D75 and C136, for verification that the gradations continue to meet ASTM C33 requirements. If lesser quantities of aggregates are used, the sampling and testing shall occur at least once every 6 months.

3-2.02. Sand Equivalent. The sand equivalent test shall be conducted each time the sand gradation tests are conducted.

3-2.03. Fly Ash. Each 400 tons of fly ash shall be sampled and tested in accordance with ASTM C618 and C311. Contractor shall supply Engineer with certified copies of supplier's (source) test reports showing chemical composition and physical analysis for each shipment delivered to Contractor and certifying that the fly ash complies with the specifications. The certificate shall be signed by the fly ash supplier.

3-2.04. Cement. Each 1500 tons of cement shall be sampled and tested in accordance with ASTM C150. Contractor shall supply Engineer with certified copies of supplier's (source) test reports showing chemical composition and physical analysis, and certifying that the cement complies with ASTM C150 and these specifications. The certificate shall be signed by the cement manufacturer.

3-2.05. Slag Cement. Each 800 tons of slag cement shall be sampled and tested in accordance with ASTM C989. Contractor shall supply Engineer with

certified copies of supplier's (source) test reports showing chemical composition and physical analysis, and certifying that the slag cement complies with ASTM C989 and these specifications. The certificate shall be signed by the slag cement manufacturer.

3-3. OWNER'S FIELD CONTROL TESTING. Field control tests, including slump, air content, and making compression test cylinders, shall be performed by Engineer or Owner's testing laboratory personnel, at the expense of Owner. Contractor shall provide access to all facilities and the services of one or more employees as necessary to assist with the field control testing.

The frequency specified herein for each field control test is approximate and subject to change as determined by Engineer.

Engineer may require field testing prior to the addition of superplasticizer at the Site to determine compliance with the specifications. Field testing after the addition of superplasticizer shall be conducted as specified and as needed to determine that the concrete is in compliance with the specifications. Air content tests shall be conducted whenever field tests are conducted.

3-3.01. Slump. A slump test shall be made for each 100 cubic yards of concrete. Slump shall be determined in accordance with ASTM C143.

3-3.02. Air Content. An air content test shall be made on concrete from one of the first three batches mixed each day and on concrete from each batch of concrete from which concrete compression test cylinders are made. Air content shall be determined in accordance with ASTM C231 and verified in accordance with ASTM C138.

3-3.03. Unit Weight. A unit weight test shall be made on concrete from each batch of concrete from which concrete compression test cylinders are made. Unit weight shall be determined in accordance with ASTM C138.

3-3.04. Concrete Temperature. A concrete temperature test shall be made on concrete from the first batch of concrete mixed each day and on concrete from each batch of concrete from which concrete compression test cylinders are made. During hot or cold weather concreting operations, temperature shall be checked not less than once per hour. Concrete temperature shall be determined in accordance with ASTM C1064.

3-3.05. Water-Soluble Chloride Ion. Water-soluble chloride ion testing shall be performed once for each 1,000 cubic yards of concrete in accordance with ASTM C1218.

3-3.06. Compression Tests. One set of concrete compression test cylinders shall be made not less than once each day concrete is placed, not less than once for each 100 cubic yards of each class of concrete, and not less than once for each 5000 square feet of surface area for slabs or walls. Half of the cylinders of each set shall be tested at an age of 7 days and the remaining cylinders shall be tested at an age of 28 days.

Test cylinders shall be made, cured, stored, and delivered to the laboratory in accordance with ASTM C31 and tested in accordance with ASTM C39.

Cylinders shall be 6 inches diameter by 12 inches high for concrete mixes using a maximum nominal aggregate size of 1 inch or larger. Cylinders may be either 6 inches diameter by 12 inches high, or 4 inches diameter by 8 inches high for concrete mixes using a maximum nominal aggregate size of less than 1 inch. The average compressive strength shall be determined from the results of at least three cylinders when using 4 inch diameter cylinders, and at least two cylinders when using 6 inch diameter cylinders. All tests for a particular mixture class shall be performed using the same sized cylinders for the duration of the work and shall match the cylinder size used for the trial mixtures.

Each set of compression test cylinders shall be marked or tagged with the date and time of day the cylinders were made, the location in the work where the concrete represented by the cylinders was placed, the number of the delivery truck or batch, the air content, the slump, the unit weight, and the concrete temperature.

3-3.07. Shrinkage Tests. Concrete shrinkage tests shall be performed once for each 1,000 cubic yards of concrete with controlled shrinkage that is placed and shall be made on concrete from a batch of concrete from which concrete compression test cylinders are made. Shrinkage testing shall be conducted as specified for the preliminary trial mixtures.

The average drying shrinkage of each set of test specimens cast in the field from concrete delivered to the Site and sampled at the end of the delivery truck chute, as measured at the 21 days drying age, shall not exceed the values indicated in Table 1.

3-3.08. Test Reports. Five copies of each test report shall be prepared and distributed by the testing laboratory to the Owner, Resident Project Representative (two copies), Engineer, and Contractor, in accordance with the Quality Control section.

3-4. EVALUATION AND ACCEPTANCE OF CONCRETE. Concrete will be evaluated for compliance with all requirements of the specifications. Concrete strength will be only one of the criteria used for evaluation and acceptance of the

concrete. The results of all tests performed on the concrete and other data and information concerning the procedures for handling, placing, and curing concrete will be used to evaluate the concrete for compliance with the specified requirements.

Compression tests will be evaluated in accordance with ACI 318 and as specified herein. A strength test shall be the average of the compressive strengths of two 6 inch diameter cylinders or three 4 inch diameter cylinders, made from the same concrete sample tested at 28 days.

3-4.01. Compression Test Evaluation. Compressive strength test results will be evaluated for compliance with the specified strength requirements. The strength level of the concrete will be considered satisfactory when the averages of all sets of three consecutive strength tests equal or exceed the specified compressive strength, f'_c, and no individual strength test result falls below the specified compressive strength by more than 500 psi.

3-4.02. Inspection of Concrete Supplier. Both scheduled and unscheduled visits by inspectors on days of concrete pours shall be accommodated. Inspectors shall be allowed access to delivery tickets and mixture proportions.

TABLE 1 – LIMITING REQUIREMENTS															
	Concrete Class	**A1**	**A2**	**A3**	**A4**	**A5**	**B**	**C**	**D1**	**D2**	**D3**	**D4**	**D5**	**D6**	**D7**
1.	**Minimum Cement Content**, lbs/cubic yard; based on maximum slump and maximum water-cementitious material ratio.														
	Maximum Nominal Aggregate Size, ASTM C33 aggregate														
	Size No. 467 (1-1/2")	---	---	489	---	440	464	---	---	600*	**	---	---	---	380
	Size No. 57 (1")	536	---	514	---	460	489	514	460	620*	**	---	---	---	400
	Size No. 67 (3/4")	564	---	526	---	480	514	526	480	640*	**	---	---	526	420
	Size No. 7 (1/2")	---	601	555	---	500	526	555	500	660*	**	---	584	555	440
	Size No. 8 (3/8")	---	636	564	---	520	555	564	520	680*	**	636	601	564	460
	Fine Aggregate, (Sand)	---	---	---	750	---	---	---	---	---	---	---	---	---	---
2.	**Compressive Strength**, minimum; psi														
	Field, 7 days;	3375	3375	3375	3000	3000	3000	3000	2250	3000	**	3000	3000	3000	1500
	Field, 28 days; f'_c	4500	4500	4500	4000	4000	4000	4000	3000	4000	**	3000	4000	4000	2000
	Laboratory, 28 days; f'_{cr}	5700	5700	5700	5200	5200	5200	5200	3200	5200	**	4200	5200	5200	2000
3.	**Maximum water-cementitious material ratio**	0.42	0.42	0.45	0.45	0.45	0.48	0.45	0.65	0.45	**	0.45	0.45 0.40[a]	0.42	0.75
4.	**Maximum nominal coarse aggregate size, inches**	1	1/2	1-1/2	Sand	1-1/2	1-1/2	1	1	1-1/2	**	3/8	1/2	3/4	1-1/2
5.	**Maximum slump**, inches														
	Slump before super-plasticizer added	3	3	4	6	6	4	3	5	6	**	4	4	4	6
	Slump after adding superplasticizer	8	8	8	8	8	8	8	8	9	**	8	8	8	10

TABLE 1 – LIMITING REQUIREMENTS															
	Concrete Class	**A1**	**A2**	**A3**	**A4**	**A5**	**B**	**C**	**D1**	**D2**	**D3**	**D4**	**D5**	**D6**	**D7**
6.	**Total air content**, percent, (± 1.5 %)	6	6	6	6	6	6	6	---	---	**	---	6	6	---
7.	**Fly ash replacement, percent range**	15-25	15-25	15-25	15-25	15-30	15-25	15-25	15-30	15-25	**	15-30	15-35	15-25	15-30
8.	**Slag cement replacement, percent range**	25-50	25-50	25-50	0	25-50	25-30	0	25-50	0	**	0	0	25-50	25-50
9	**Testing limits**														
	Sand equivalent, min. percent	75	75	75	75	75	75	75	---	75	**	75	75	75	---
	Chloride ion, max. percent	0.10	0.10	0.15	0.10	0.30	0.15	0.10	0.30	0.30	**	---	0.15	0.15	---
	Shrinkage, max. percent; based 4 x 4 x 11 inch specimen														
	Laboratory	0.036	0.036	0.048	---	---	0.048	0.048	---	0.048	**	---	---	0.048	---
	Field	0.048	0.048	0.064	---	---	0.064	0.064	---	0.064	**	---	---	0.064	---
	Coarse Aggregate: Clay and shale combined particles shall not exceed, max. percent	1	1	1	1	1	3	2	10	1	**	3	1	2	3
10	**Concrete temperature at time of delivery and placement, max. °F**	85	85	90	85	90	95	85	95	95	**	90	85	85	95

NOTES:

* "D2" (Underwater concrete) - Limit aggregate to 3/4" for reinforced concrete, up to 1-1/2" for unreinforced concrete.

** "D3" (Mass Concrete) limiting requirements shall be as indicated in the Mass Concrete section.

[a] "D5" Wash water trough top edge water-cementitious ratio, 100 percent sand passing No. 8 sieve.

TABLE 2A – SUBMITTAL REQUIREMENTS (PRELIMINARY REVIEW OF MATERIALS)															
	Concrete Class	**A1**	**A2**	**A3**	**A4**	**A5**	**B**	**C**	**D1**	**D2**	**D3**	**D4**	**D5**	**D6**	**D7**
1	**Aggregate reports** (ASTM C33)														
	Fine aggregate														
	Source and type	X	X	X	X	X	X	X	X	X	**	---	X	X	---
	Gradation	X	X	X	X	X	X	X	X	X	**	---	X	X	---
	Deleterious materials	X	X	X	X	X	X	X	X	X	**	---	X	X	---
	Fineness modulus	X	X	X	X	X	X	X	---	X	**	X	X	X	---
	Alkali-aggregate reactivity	X	X	X	X	X	X	X	X	X	**	---	X	X	X
	Sand equivalent	X	X	X	X	X	X	X	---	X	**	X	X	X	---
	Coarse aggregate														
	Source and type	X	X	X	---	X	X	X	X	X	**	X	X	X	X
	Gradation	X	X	X	---	X	X	X	X	X	**	X	X	X	X
	Deleterious materials	X	X	X	---	X	X	X	X	X	**	X	X	X	---
	Abrasion loss	X	X	X	---	X	X	X	---	X	**	---	X	X	---
	Soundness test	X	X	X	---	X	X	X	---	X	**	X	X	X	---
	Alkali-aggregate reactivity	X	X	X	---	X	X	X	X	X	**	---	X	X	X
	Combined aggregate gradation	X	X	X	---	X	X	X	X	---	**	X	---	---	---
2	**Cement**, mill report	X	X	X	X	X	X	X	X	X	**	X	X	X	X
3	**Cementitious material**, type, data sheet, and test report (fly ash, slag cement)	X	X	X	X	X	X	X	X	X	**	X	X	X	X
4	**Admixtures**														
	Data sheets and certifications	X	X	X	X	X	X	X	X	X	**	X	X	X	X
	Manufacturer's approval letter	X	X	X	X	X	X	X	X	X	**	X	X	X	X

TABLE 2A – SUBMITTAL REQUIREMENTS (PRELIMINARY REVIEW OF MATERIALS)															
	Concrete Class	**A1**	**A2**	**A3**	**A4**	**A5**	**B**	**C**	**D1**	**D2**	**D3**	**D4**	**D5**	**D6**	**D7**
5	**NSF 61 compliance**, for each proposed concrete constituent, where applicable	**X**	**X**	**---**	**---**	**---**	**---**	**---**	**X**	**---**	******	**---**	**---**	**---**	**---**

TABLE 2B – SUBMITTAL REQUIREMENTS (PROPOSED MIXTURE PROPORTIONS)															
	Concrete Class	**A1**	**A2**	**A3**	**A4**	**A5**	**B**	**C**	**D1**	**D2**	**D3**	**D4**	**D5**	**D6**	**D7**
5	**Mixture proportions**, reports	**X**	**X**	**X**	**X**	**X**	**X**	**X**	**X**	**X**	******	**X**	**X**	**X**	**X**

TABLE 2C – SUBMITTAL REQUIREMENTS (MIXTURE TESTING)															
	Concrete Class	**A1**	**A2**	**A3**	**A4**	**A5**	**B**	**C**	**D1**	**D2**	**D3**	**D4**	**D5**	**D6**	**D7**
6	**Type of testing**														
	Field test records acceptable	**---**	**---**	**---**	**---**	**---**	**---**	**---**	**X**	**---**	******	**X**	**X**	**X**	**X**
	Trial mixtures required	**X**	**X**	**X**	**X**	**X**	**X**	**X**	**---**	**X**	******	**---**	**---**	**---**	**---**
7	**Test Reports Required**														
	Confirmation of materials tested														
	Cement brand, type, composition, quantity	**X**	**X**	**X**	**X**	**X**	**X**	**X**	**X**	**X**	******	**X**	**X**	**X**	**---**
	Fly ash brand, type, composition, quantity	**X**	**X**	**X**	**X**	**X**	**X**	**X**	**X**	**X**	******	**X**	**X**	**X**	**X**
	Specific gravity of each aggregate	**X**	**X**	**X**	**X**	**X**	**X**	**X**	**X**	**X**	******	**X**	**X**	**X**	**X**
	Ratio of fine to total aggregates	**X**	**X**	**X**	**---**	**X**	**X**	**X**	**---**	**---**	******	**---**	**X**	**X**	**---**
	Water content	**X**	**X**	**X**	**X**	**X**	**X**	**X**	**X**	**X**	******	**X**	**X**	**X**	**---**
	Water-cementitious materials ratio	**X**	**X**	**X**	**X**	**X**	**X**	**X**	**X**	**X**	******	**X**	**X**	**X**	**---**
	Slump	**X**	**X**	**X**	**X**	**X**	**X**	**X**	**---**	**X**	******	**X**	**X**	**X**	**---**
	Unit weight	**X**	**X**	**X**	**---**	**X**	**X**	**X**	**---**	**X**	******	**---**	**X**	**X**	**---**
	Air content	**X**	**X**	**X**	**---**	**X**	**X**	**X**	**---**	**---**	******	**---**	**X**	**X**	**---**
	Temperature	**X**	**X**	**X**	**X**	**X**	**X**	**X**	**---**	**X**	******	**---**	**---**	**---**	**---**

TABLE 2C – SUBMITTAL REQUIREMENTS (MIXTURE TESTING)															
	Concrete Class	**A1**	**A2**	**A3**	**A4**	**A5**	**B**	**C**	**D1**	**D2**	**D3**	**D4**	**D5**	**D6**	**D7**
	Time of initial set at 70°F and 90°F.	**X**	**X**	**X**	**X**	**X**	**X**	**X**	**---**	**X**	******	**---**	**---**	**---**	**---**
	Three point curves	**X**	**X**	**X**	**---**	**---**	**---**	**X**	**---**	**X**	******	**---**	**---**	**---**	**---**
	Compressive strength at 7 and 28 days	**X**	**X**	**X**	**X**	**X**	**X**	**X**	**X**	**X**	******	**X**	**X**	**X**	**X**
	Water-soluble chloride ion	**X**	**X**	**X**	**X**	**X**	**X**	**X**	**X**	**X**	******	**---**	**X**	**X**	**---**
	Drying shrinkage	**X**	**X**	**X**	**---**	**---**	**X**	**X**	**---**	**X**	******	**---**	**---**	**X**	**---**
	NSF 61 compliance evaluations where applicable	**X**	**X**	**---**	**---**	**---**	**---**	**---**	**X**	**---**	******	**---**	**---**	**---**	**---**

NOTES:
** "D3" (Mass Concrete) submittal requirements shall be as indicated in the Mass Concrete section.

End of Section

Section 03351

CONCRETE PLACING

PART 1 – GENERAL

1-1. SCOPE. This section covers placing of cast-in-place concrete.

Both inch-pound (English) and SI (metric) units of measurement are specified herein; the values in inch-pound units govern.

1-2. GENERAL. All cast-in-place concrete shall be properly placed as indicated on the Drawings and as specified herein.

1-3. SUBMITTALS.

1-3.01. Drawings and Data. All submittals of test data, manufacturers' certificates of compliance, reports, catalog data sheets and other data shall be in accordance with the Submittals Procedures section.

1-3.02. Manufacturer's Certificate of Compliance. A manufacturer's certificate of compliance, which includes the name of the project and, when requested, copies of independent test results confirming compliance with specified requirements, shall be submitted to Engineer for the following materials:

Epoxy bonding agent.

1-3.03. Lift Drawings. Concrete lift drawings shall be submitted in accordance with the Submittals Procedures section. Content of the lift drawings shall include, but not be limited to, the following.

Construction joint locations and pour sequences.

Concrete dimensions, joint details, and location of embedded items required by electrical, mechanical, and electrical design.

A bill of materials indicating all items to be included in each placement. The bill of materials shall list descriptions, quantities, weights, and other relevant information such as tag numbers or purchase order numbers for specialty items.

Location of any blockouts required where needed to work around late delivery of items to be embedded.

PART 2 - PRODUCTS

2-1. LIMITING REQUIREMENTS. Concrete shall be handled and placed in a manner that will minimize shrinkage and cracking as specified herein. Concrete temperatures shall be controlled both before and after placement to minimize cracking.

2-2. MATERIALS.

Epoxy Bonding Agent	ASTM C881, Type V, moisture insensitive, 100 percent solids; Dayton Superior “Sure Bond J58”, Euclid "Euco #452", or Prime Resins “Prime Bond 3000”.

2-3. ARCHITECTURAL CONCRETE. Not used.

PART 3 - EXECUTION

3-1. RECEIVING. Contractor shall check each delivery ticket to verify the concrete class delivered to the jobsite is in compliance with the concrete requested and is suitable for Contractor's handling, placing, finishing, and curing procedures. Engineer will collect the delivery tickets from the truck operator.

3-2. PLACEMENT. The limits of each concrete pour shall be determined by Contractor and shall be acceptable to Engineer. All concrete within the predetermined limits shall be placed in one continuous operation.

Before concrete is placed, forms, reinforcement, water stops, anchor bolts, and embedments shall be rigidly secured in proper position; all dirt, mud, water, and debris shall be removed from the space to be occupied by concrete; all surfaces encrusted with dried concrete from previous placements shall be cleaned; and the entire installation shall be acceptable to Engineer. Remove all frost, ice, and snow from within the formwork before concrete is placed.

Contractor shall inform Engineer at least 24 hours in advance of any concrete placement.

3-2.01. Bonding to Hardened Concrete. The surface of hardened concrete upon which fresh concrete is to be placed shall be rough, clean, sound, and damp. Before placement of plastic concrete, the hardened surface shall be cleaned of all laitance and foreign substances (including curing compound), washed with clean water, wetted thoroughly, and the surface made free of standing water. Surface profile of the hardened concrete after surface preparation shall be as required for good bond.

Coarse aggregate shall be omitted from the first batch or batches of concrete placed on hardened concrete in wall or column forms. The mortar puddle, Class A4 concrete, shall cover the hardened concrete by at least 2 inches at every point.

3-2.02. Conveying Concrete. Methods of conveying concrete to the point of final deposit shall prevent segregation or loss of ingredients. After placement in the forms, concrete shall not be moved laterally more than 5 feet. Concrete's free fall should not exceed 4 feet.

3-2.03. Pumping Concrete. The slump of concrete, with or without a superplasticizer, which is discharged into the pump may exceed the specified maximum slump value by the amount of slump loss in the pumping system, up to a maximum of 1 inch. The slump loss shall be determined by tests made at each end of the pumping system. If tests indicate a slump loss greater than 1 inch in the pumping system, Contractor shall modify the pumping system as required to reduce the slump loss to 1 inch or less.

3-2.04. Placing Concrete. For proper compaction, concrete shall be placed in approximately horizontal layers not to exceed 24 inches. Each layer of concrete shall be plastic when covered with the following layer, and the rate of vertical rise of the concrete in the forms shall not be less than 24 inches per hour. Vertical construction joints shall be provided as necessary to comply with these requirements.

Concrete shall be placed and compacted in wall or column forms before any reinforcement is placed in the system to be supported by such walls or columns. The height of any portion of a wall or column placed monolithically with a floor or roof slab shall not exceed 6 feet. Concrete in walls or columns shall be in place at least 2 hours before concrete is placed in the structural systems to be supported by such walls or columns.

Concrete shall be thoroughly settled in wall forms before top finishing. All laitance, debris, and surplus water shall be removed from concrete surfaces at tops of forms by screeding, scraping, or other effective means. Wherever the top of a wall will be exposed to weathering, the forms shall be overfilled and after the concrete has settled, the excess shall be screeded off.

3-2.05. Compaction. During and immediately after placement, concrete shall be thoroughly compacted and worked around all reinforcement and embedments and into the corners of the forms. Mechanical vibrators shall maintain at least 14,000 cycles per minute when immersed in the concrete. The number and type of vibrators shall be acceptable to Engineer. The use of "jitterbug" tampers to compact concrete flatwork will not be permitted.

3-2.06. Cold Weather Concreting. Except as modified herein, cold weather concreting shall comply with ACI 306.1.

When placed, heated concrete shall not be warmer than 80°F.

3-2.07. Hot Weather Concreting. Except as modified herein, hot weather concreting shall comply with ACI 305.1.

At air temperatures of 90°F or above, concrete shall be kept as cool as practicable during placement. The temperature of the concrete when placed in the work shall not exceed the values indicated in the Cast-in-Place Concrete section.

Plastic shrinkage cracking due to rapid evaporation of moisture shall be prevented. Concrete shall not be placed when the evaporation rate (actual or anticipated) equals or exceeds 0.2 lb per square foot per hour, as determined using the nomograph in Appendix A of ACI 305.1.

3-2.08. Placement Sequence. NOT APPLICABLE.

3-2.09. Duct Banks. Duct bank concrete shall be compacted by rodding or spading only. Mechanical vibrators shall not be used. Concrete shall be worked around reinforcement and embedments and into the corners of the forms.

3-2.10. Underwater Concrete. Not used.

3-3. PAN STAIRS. Not used.

3-4. COMPOSITE TOPPING CONCRETE. Not used.

3-5. CLEANING EMBEDMENTS. Embedments shall be clean when installed.

End of Section

Section 03352

CONCRETE FINISHING

PART 1 – GENERAL

1-1. SCOPE. This section covers finishing of cast-in-place concrete.

Both inch-pound (English) and SI (metric) units of measurement are specified herein; the values in inch-pound units govern.

1-2. GENERAL. All cast-in-place concrete shall be properly finished as indicated on the Drawings and as specified herein.

1-3. SUBMITTALS.

1-3.01. Drawings and Data. All submittals of test data, manufacturers' certificates of compliance, reports, catalog data sheets and other data shall be in accordance with the Submittals Procedures section.

1-3.02. Manufacturer's Certificate of Compliance. A manufacturer's certificate of compliance, which includes the name of the project and, when requested, copies of independent test results confirming compliance with specified requirements, shall be submitted to Engineer for the following materials:

Floor sealer.

PART 2 - PRODUCTS

2-1. MATERIALS.

Concrete Surface Coloring/Hardener	Mineral aggregate dry-shake colored hardener for concrete flatwork. ChemSystems, Inc. “CSI Heavy-Duty Color Hardener”, Euclid “Surflex”, or Dayton Superior “Quartz Tuff”.
Evaporation Reducer	Dayton Superior "AquaFilm Concentrate J74", Euclid "Eucobar", L&M Chemical "E-Con", BASF "MasterKure ER50", or Sika "SikaFilm".
Nonslip Aggregate	Aluminum oxide aggregate, L&M Chemical "Grip It", BASF "MasterTop 120SR", or Dayton Superior “Emery Non-Slip”.

Floor Sealer	ASTM C1315, Type I, Class A, minimum 25 percent solids, acrylic, non-yellowing, unit moisture loss 0.40 kg/m^2 maximum in 72 hours. Product shall not exceed VOC limits established by the federal, state, or local regulatory agency having jurisdiction over the project site.

2-2. ARCHITECTURAL CONCRETE. Not used.

PART 3 - EXECUTION

3-1. FINISHING UNFORMED SURFACES. Buried and permanently submerged concrete blocking and encasement will require no finishing except as necessary to obtain the required surface elevations or contours. The unformed surfaces of all other concrete shall be screeded and given an initial float finish followed by additional floating, and troweling where required.

3-1.01. Screeding. Screeding shall produce a concrete surface conforming to the proper elevation and contour, with all aggregates completely embedded in mortar.

3-1.02. Application of Evaporation Reducer. Concrete flatwork subject to rapid evaporation due to hot weather, drying winds, and sunlight shall be protected with an evaporation reducer. The evaporation reducer shall form a continuous film on the surface of fresh, plastic concrete to reduce evaporation.

Immediately following screeding, evaporation reducer shall be sprayed over the entire surface of fresh, plastic concrete flatwork at a rate of not less than 200 square feet per gallon, in accordance with the manufacturer's recommendations. The spray equipment shall have sufficient capacity to continuously spray the product at approximately 40 psi with a suitable nozzle as recommended by the manufacturer.

The sprayable solution shall be prepared as recommended by the manufacturer.

Under severe drying conditions, additional applications of evaporation reducer may be required following each floating or troweling, except the last finishing operation.

3-1.03. Floating. Screeded surfaces shall be given an initial float finish as soon as the concrete has stiffened sufficiently for proper working. Any piece of coarse aggregate which is disturbed by the float or which causes a surface irregularity shall be removed and replaced with mortar. Initial floating shall produce a surface of uniform texture and appearance, with no unnecessary working of the surface.

Initial floating shall be followed by a second floating at the time of initial set. The second floating shall produce a finish of uniform texture and color, and unless additional finishing is specifically required, shall produce the completed finish for unformed surfaces.

Floating shall be done with hand floats or suitable mechanical compactor-floats.

3-1.04. Finishing Surfaces for Bonding. All surfaces to be covered with concrete or topping shall be float finished. All laitance, surface mortar, and unsound material shall be removed by brushing or air blasting at the time of initial set. Surfaces shall be rough, clean, and sound. Floors and other flat surfaces to receive composite topping (Class D6) shall be given a broom finish or raked finish with at least a 1/4 inch profile.

3-1.05. Troweling. Interior floor surfaces which will be exposed after construction is completed; surfaces to be covered with resilient floor coverings, thinset terrazzo, or seamless floor covering; exposed top surfaces of equipment bases and interior curbs; and other surfaces designated on the Drawings shall be steel trowel finished. Surfaces to be covered with elastomeric deck covering shall be lightly troweled but not burnished. Trowel finishing will not be required for floors which are normally submerged. Troweling shall be performed after the second floating when the surface has hardened sufficiently to prevent an excess of fines being drawn to the surface. Troweling shall produce a dense, smooth, uniform surface free from blemishes and trowel marks.

3-1.06. Edging. Unless specified to be beveled, exposed edges of floated or troweled surfaces shall be edged with a tool having at least a 1/8 inch corner radius.

3-1.07 Broom Finish. Concrete surfaces indicated below shall be given a light broom finish to produce a nonslip surface. Brooming shall be done after the second floating and at right angles to the normal direction of traffic.

Broom finish shall be provided at the following locations:

a. Pump Station
b. Generator Platform

3-1.08. Nonslip Aggregate Finish. Tread surfaces of indicated stairs shall be surfaced with nonslip aluminum oxide aggregate. Aggregate shall be uniformly distributed during steel troweling at the rate of 1/4 lb per square foot, in accordance with the manufacturer's recommendations and as acceptable to Engineer.

Nonslip aggregate finish shall be provided at the locations as noted on the Drawings.

3-1.09. Pavement Finishing. The surface of pavements shall not vary more than 1/8 inch under a 10 foot straightedge placed parallel to the center line.

Following placement and consolidation, and the disappearance of bleed water, the concrete surface shall be drag finished, using a seamless strip of damp burlap over the full width of the surface. The burlap drag shall consist of sufficient layers of burlap and shall have sufficient length in contact with the concrete to slightly groove the surface. The drag shall be moved forward with a minimum bow of the lead edge. The drag shall be kept damp, clean, and free of particles of hardened concrete. When acceptable to Engineer, carpet, artificial turf, or cotton fabric may also be used.

3-1.10. Curb and Gutter Finishing. Not used.

3-1.11. Sidewalk Finishing. Not used.

3-2. CONCRETE SURFACE COLORING/HARDENER. Where concrete surface coloring/hardener is required, a dry-shake coloring material shall be worked into the freshly screeded concrete surface.

3-2.01. Duct Bank Finishing. After screeding and before final floating, a red concrete surface coloring shall be dusted onto the fresh concrete surface at the rate recommended by the manufacturer.

3-2.02. Floor Finishing. Where concrete surface coloring/hardener is required on the Drawings, the coloring material shall be applied at the rate of 50 lbs per 100 square feet in strict accordance with the manufacturer's recommendations. The color of the concrete surface shall be as required on the Drawings.

Concrete floors with surface coloring shall be protected from damage until acceptance by Engineer. Areas which are subject to traffic or over which equipment or materials are to be moved shall be covered with hardboard or plywood. Just before final inspection, the colored floors shall be thoroughly cleaned and then waxed with colored wax furnished by the manufacturer of the coloring material.

3-3. MINERAL COLORED CONCRETE. Not used.

3-4. FLOOR SEALER. All concrete floors in interior locations which are to remain as exposed concrete or will be covered with carpet shall be given two coats of clear floor sealer in addition to any which may have been applied as a membrane curing compound. Floor sealer shall not be applied to concrete floors that are to be stained or etched, covered with chemical resistant linings, covered

with additional concrete, or indicated in the Architectural drawings to be covered with a finish flooring material. Prior to application of each coat of sealer, the floor shall be thoroughly cleaned of dirt, grease, and other foreign matter. The first coat shall be applied at the end of the curing period and before any traffic is permitted on the floor. The second coat shall be applied in preparation for substantial completion of the work. Floor sealer shall be applied in accordance with the manufacturer's recommendations.

3-5. REPAIRING DEFECTIVE CONCRETE. Defective concrete shall be defined as any surface with undesirable visible effects in excess of that permitted by the relevant formed concrete surface category (CSC), except as indicated otherwise herein.

Defects in formed concrete surfaces shall be repaired to the satisfaction of Engineer within 24 hours of form removal. Surface repair work shall conform to Article 5.3.7 of ACI 301 and shall be performed in a manner that will not interfere with thorough curing of the surrounding concrete. Surface repair material shall be adequately cured.

Defects in concrete that are more than 3 inches deep shall be brought to the attention of Engineer prior to any repair work. Contractor shall submit a proposed repair material and procedure for review by Engineer. The repair material and procedure required by Engineer may be more extensive than the process described in Article 5.3.7 of ACI 301.

3-6. FINISHING FORMED SURFACES. Formed concrete surfaces shall meet all criteria of the relevant formed concrete surface category (CSC), as defined in ACI 347.3R, except as indicated otherwise herein. Surfaces shall be assigned to CSC's as indicated.

Formed Concrete Surface Category	Applicable Surfaces	Mockup Required
CSC1	Formed concrete surfaces that will be in permanent contact with earth backfill.	No
CSC2	All other formed concrete surfaces not designated otherwise.	No
CSC3	None.	Yes
CSC4	None.	Yes

3-6.01. Tie Holes. All tie holes in formed surfaces, regardless of the relevant CSC, shall be cleaned, wetted, and filled with patching mortar. The patches shall be finished flush and cured and shall match the texture and color of the adjacent concrete.

3-6.02. Mockups. Not used.

3-6.03. Grout Cleaning. The surfaces noted on the Drawings shall be finished by grout cleaning.

Grout-cleaned finish shall conform to Paragraph 5.3.3.4.b of ACI 301. Grout cleaning shall not result in an overall plastering of the concrete surfaces, but shall produce a smooth, uniform surface free of marks, voids, surface glaze, and cement dust.

3-7. TOLERANCES. Tolerances for cast-in-place concrete work shall be as stipulated in ACI 117, unless otherwise indicated.

3-7.01. Settling Basin Tolerance. Not used.

3-7.02. Ringwall Tolerances. Not used.

3-8. CONCRETE WASH WATER TROUGHS. Not used.

3-9. PAN STAIRS. Not used.

3-10. COMPOSITE TOPPING CONCRETE.

3-11. CLEANING EMBEDMENTS. After placement of concrete, surfaces of embedments not in contact with concrete shall be cleaned of concrete spatter and other foreign substances.

End of Section

Section 03353

CONCRETE CURING

PART 1 – GENERAL

1-1. SCOPE. This section covers curing of cast-in-place concrete.

Both inch-pound (English) and SI (metric) units of measurement are specified herein; the values in inch-pound units govern.

1-2. GENERAL. All cast-in-place concrete shall be properly cured as indicated on the Drawings and as specified herein.

1-3. SUBMITTALS.

1-3.01. Drawings and Data. All submittals of test data, manufacturers' certificates of compliance, reports, catalog data sheets and other data shall be in accordance with the Submittals Procedures section.

1-3.02. Manufacturer's Certificate of Compliance. A manufacturer's certificate of compliance, which includes the name of the project and, when requested, copies of independent test results confirming compliance with specified requirements, shall be submitted to Engineer for the following materials:

Membrane curing compound.

PART 2 - PRODUCTS

2-1. LIMITING REQUIREMENTS. Concrete shall be cured in a manner that will minimize shrinkage and cracking as specified herein.

2-2. MATERIALS.

Membrane Curing Compound	ASTM C1315, Type I, Class A, minimum 25 percent solids, acrylic, non-yellowing, unit moisture loss 0.40 kg/m^2 maximum in 72 hours. Product shall not exceed VOC limits established by the federal, state, or local regulatory agency having jurisdiction over the project site.

2-3. ARCHITECTURAL CONCRETE. Not used.

PART 3 - EXECUTION

3-1. GENERAL.

3-1.01. Cold Weather Concreting. Except as modified herein, cold weather concreting shall comply with ACI 306.1.

The concrete surface shall be maintained at a temperature of at least 50°F for 5 days or 70°F for 3 days, after placement. Concrete temperature shall be recorded at least six times for each 24 hour period. Concrete and adjacent form surfaces shall be kept continuously moist. Sudden cooling of concrete shall not be permitted.

3-1.02. Hot Weather Concreting. Except as modified herein, hot weather concreting shall comply with ACI 305.1.

At air temperatures of 90°F or above, concrete shall be kept as cool as practicable during curing.

Plastic shrinkage cracking due to rapid evaporation of moisture shall be prevented.

3-2. CURING. Concrete shall be protected from loss of moisture for at least 7 days after placement unless indicated otherwise. Curing of concrete shall be done by methods which will keep the concrete surfaces adequately wet for the specified curing period.

3-2.01. Water Curing. Water curing shall be performed for concrete in liquid-containing structures and for all concrete containing slag cement. Other forms of curing will not be acceptable in these applications. Water curing shall be in accordance with ACI 308.1 except as modified herein.

Water saturation of concrete surfaces shall begin as soon as possible after initial set. The rate of water application shall be regulated to provide complete surface coverage with a minimum of runoff. The application of water to walls may be interrupted for grout cleaning only over the areas being cleaned at the time, and the concrete surface shall not be permitted to become dry during such interruption.

Water curing shall continue for 14 days for concrete containing slag cement, and for 7 days for other types of concrete. However, when concrete is being protected from low temperatures, the duration of water curing may be shortened to 1 day less than the duration of cold weather protection.

When forms are removed before the specified curing duration is completed, measures shall be taken to immediately continue water curing and to provide adequate thermal protection for the concrete.

3-2.02. Membrane Curing. Unless otherwise specified, membrane curing compound may be used instead of water curing on concrete in non-liquid-containing structures which will not be stained or etched, covered with chemical resistant linings, covered with additional concrete, or indicated in the Architectural drawings to be covered with a finish flooring material.

Membrane curing compound shall be evenly sprayed at a coverage rate of not more than 300 square feet per gallon. The spray equipment shall have sufficient capacity to continuously spray curing compound at approximately 40 psi with a suitable nozzle as recommended by the manufacturer. Unformed surfaces shall be covered with the first coat of curing compound within 30 minutes after final finishing. A second coat of curing compound shall be applied when the first coat has become tacky to the touch and shall be applied at right angles to the first coat.

Curing compound shall be suitably protected against abrasion during the curing period.

3-2.03. Film Curing. Unless otherwise specified, film curing with white polyethylene sheeting may be used instead of water curing on concrete in nonliquid-containing structures which will be covered later with mortar or additional concrete, or which will otherwise not be exposed to view.

Film curing shall begin as soon as possible after initial set of the concrete. The concrete surfaces shall be completely covered with polyethylene sheeting. Sheeting shall overlap the edges of the concrete for proper sealing and anchorage, and joints between sheets shall be sealed. All tears, holes, and other damage shall be promptly repaired. Covering shall be anchored continuously at edges and as necessary to prevent billowing on the surface.

End of Section

Section 03600

GROUTING

PART 1 - GENERAL

1-1. SCOPE. This section covers procurement and installation of grout. Unless otherwise specified, only nonshrink grout shall be furnished.

Epoxy grouting and adhesive anchoring of anchor bolts, threaded rod anchors, and reinforcing bars is covered in the Anchorage in Concrete and Masonry section. Grouting of masonry is covered in the Masonry section.

1-2. SUBMITTALS. A letter of certification indicating the types of grout to be supplied and the intended use of each type shall be submitted in accordance with the Submittals Procedures section.

1-3. DELIVERY, STORAGE, AND HANDLING. Materials shall be handled, transported, and delivered in a manner which will prevent damage of any kind. Materials shall be protected from moisture.

PART 2 - PRODUCTS

2-1. MATERIALS.

Nonshrink Grout	Precision cementitious grout with demonstrated non-shrinking properties, minimum 28 day compressive strength of 9000 psi; L&M "Crystex", BASF "Masterflow 928”, Sika “SikaGrout 328”, or Dayton Superior "Sure-Grip High Performance Grout".
Water	Clean and free from deleterious substances.

2-2. CEMENTITIOUS GROUT. Cementitious grout shall be furnished factory premixed so that only water is added at the jobsite.

2-3. EPOXY GROUT. Epoxy grout shall be used in lieu of cementitious grout when required by the equipment manufacturer for performance or warranty requirements. Epoxy grout shall be a three component system consisting of a Part A (resin), Part B (hardener) and Part C (aggregate). All three components shall be products of the same manufacturer and be compatible. Epoxy grout products and installation procedures shall be submitted to Engineer for approval.

PART 3 - EXECUTION

3-1. CEMENTITIOUS GROUT INSTALLATION.

3-1.01. Preparation. The concrete foundation to receive cementitious grout shall be saturated with water for at least 12 hours preceding grouting unless additional time is required by the grout manufacturer.

3-1.02. Mixing. Grout shall be mixed in a mechanical mixer. No more water shall be used than is necessary to produce a flowable grout, nor shall water content exceed the amount recommended by the manufacturer.

3-1.03. Temperature Restrictions. Grout shall be placed in accordance with the manufacturer's published temperature restrictions. Ambient temperature and grout temperature shall be a minimum of 40 degrees F and rising at time of placement. Grout shall not be placed on frost covered surfaces. Grout shall be protected from freezing until it has reached a minimum strength of 4,000 psi. Grout shall not be placed when the ambient or grout temperature exceeds 90 degrees F.

3-1.04. Placement. Unless otherwise specified or indicated on the Drawings, grout under baseplates shall be 1-1/2 inches [38 mm] thick. Grout shall be placed in strict accordance with the directions of the manufacturer so that all spaces and cavities below the baseplates are completely filled without voids. Forms shall be provided where structural components of baseplates will not confine the grout.

3-1.05. Edge Finishing. In all locations where the edge of the grout will be exposed to view, the grout shall be finished smooth after it has reached its initial set. Except where shown to be finished on a slope, the edges of grout shall be cut off flush at the baseplate.

3-1.06. Curing. Grout shall be protected against rapid loss of moisture by covering with wet cloths or polyethylene sheets. After edge finishing is completed, the grout shall be wet cured for at least 3 days and then an acceptable membrane curing compound shall be applied.

3-2. EPOXY GROUT INSTALLATION. Epoxy grout shall be installed in accordance with ACI 351.5.

End of Section

Section 05520

METAL RAILINGS

PART 1 - GENERAL

1.1 SUMMARY

A. Section Includes:
   1. Aluminum railings.

B. Related Requirements:

   1. Section 055013 "Structural Metals" for railings associated with stairs.

1.2 ACTION SUBMITTALS

A. Product Data: For the following:

   1. Manufacturer's product lines of mechanically connected railings.
   2. Railing brackets.
   3. Grout, anchoring cement, and paint products.

B. Shop Drawings: Include plans, elevations, sections, details, and attachments to other work.

C. Samples: For each type of exposed finish required.

D. Delegated-Design Submittal: For railings, including analysis data signed and sealed by the qualified professional engineer responsible for their preparation.

1.3 INFORMATIONAL SUBMITTALS

A. Product Test Reports: For pipe and tube railings, for tests performed by a qualified testing agency, according to ASTM E 894 and ASTM E 935.

PART 2 - PRODUCTS

2.1 MANUFACTURERS

A. Aluminum Pipe and Tube Railings:

1. Superior Aluminum Products, Inc.

2.2 PERFORMANCE REQUIREMENTS

A. Delegated Design: Engage a qualified professional engineer, registered in the State of the project, to design railings, including attachment to building construction.

B. Structural Performance: Railings, including attachment to building construction, shall withstand the effects of gravity loads and the following loads and stresses within limits and under conditions indicated. An allowable stress increase of 1/3 shall not be incorporated into the design of any part of the railing system.

1. Handrails and Top Rails of Guards:

   a. Uniform load of 50 lbf/ ft applied in any direction.
   b. Concentrated load of 200 lbf applied in any direction.
   c. Uniform and concentrated loads need not be assumed to act concurrently.

2. Infill of Guards:

   a. Concentrated load of 50 lbf applied horizontally on an area of 1 sq. ft..
   b. Infill load and other loads need not be assumed to act concurrently.

2.3 METALS, GENERAL

A. Brackets, Flanges, and Anchors: Cast or formed metal of same type of material and finish as supported rails unless otherwise indicated.

1. Provide type of bracket with predrilled hole for exposed bolt anchorage and that provides 1-1/2-inch clearance from inside face of handrail to finished wall surface.

2.4 ALUMINUM

A. Aluminum, General: Provide alloy and temper recommended by aluminum producer and finisher for type of use and finish indicated, and with not less than the strength and durability properties of alloy and temper designated below for each aluminum form required.

B. Extruded Bars and Tubing: ASTM B221, Alloy 6063-T5/T52.

C. Extruded Structural Pipe and Round Tubing: ASTM B429, Alloy 6063-T6.

D. Drawn Seamless Tubing: ASTM B210, Alloy 6063-T832.

E. Plate and Sheet: ASTM B209, Alloy 6061-T6.

F. Die and Hand Forgings: ASTM B247, Alloy 6061-T6.

G. Castings: ASTM B26, Alloy A356.0-T6.

2.5 FASTENERS

A. General: Provide the following:
   1. Aluminum Railings: Type 316 stainless-steel fasteners.

B. Post-Installed Anchors: Expansion anchors or adhesive anchors, as specified in the Anchorage in Concrete and Masonry section.

   1. Material for Interior Locations: Carbon-steel components zinc-plated to comply with ASTM B633 or ASTM F1941, Class Fe/Zn 5, unless otherwise indicated.
   2. Material for Exterior Locations and Where Stainless Steel Is Indicated: Alloy Group 1 or 2 stainless-steel bolts, ASTM F 93, and nuts, ASTM F594.

2.6 MISCELLANEOUS MATERIALS

A. Welding Rods and Bare Electrodes: Select according to AWS specifications for metal alloy welded.

B. Etching Cleaner for Galvanized Metal: Complying with MPI#25.

C. Galvanizing Repair Paint: High-zinc-dust-content paint complying with SSPC-Paint 20 and compatible with paints specified to be used over it.

D. Shop Primers: Provide primers that comply with the Protective Coatings section.

E. Universal Shop Primer: Fast-curing, lead- and chromate-free, universal modified-alkyd primer complying with MPI#79 and compatible with topcoat.

F. Epoxy Zinc-Rich Primer: Complying with MPI#20 and compatible with topcoat.

G. Epoxy Intermediate Coat: Complying with MPI #77 and compatible with primer and topcoat.

H. Polyurethane Topcoat: Complying with MPI #72 and compatible with undercoat.

I. Bituminous Paint: Cold-applied asphalt emulsion complying with ASTM D 187.

J. Nonshrink, Nonmetallic Grout: As specified in the Grouting section.

2.7 FABRICATION

A. Cut, drill, and punch metals cleanly and accurately. Remove burrs and ease edges to a radius of approximately 1/32 inch unless otherwise indicated. Remove sharp or rough areas on exposed surfaces.

B. Form work true to line and level with accurate angles and surfaces.

C. Welded Connections: Cope components at connections to provide close fit, or use fittings designed for this purpose. Weld all around at connections, including at fittings.

1. Use materials and methods that minimize distortion and develop strength and corrosion resistance of base metals.
2. Obtain fusion without undercut or overlap.
3. Remove flux immediately.
4. At exposed connections, finish exposed surfaces smooth and blended so no roughness shows after finishing and welded surface matches contours of adjoining surfaces.

D. Welded Connections for Aluminum Pipe: Fabricate railings to interconnect members with concealed internal welds that eliminate surface grinding, using manufacturer's standard system of sleeve and socket fittings.

E. Nonwelded Connections: Connect members with concealed mechanical fasteners and fittings. Fabricate members and fittings to produce flush, smooth, rigid, hairline joints.

F. Form changes in direction by inserting prefabricated elbow fittings.

G. Close exposed ends of railing members with prefabricated end fittings.

H. Provide wall returns at ends of wall-mounted handrails unless otherwise indicated.

I. Brackets, Flanges, Fittings, and Anchors: Provide wall brackets, flanges, miscellaneous fittings, and anchors to interconnect railing members to other work unless otherwise indicated.

1. At brackets and fittings fastened to plaster or gypsum board partitions, provide crush-resistant fillers or other means to transfer loads through wall finishes to structural supports and prevent bracket or fitting rotation and crushing of substrate.

2.8 ALUMINUM FINISHES

A. Appearance of Finished Work: Variations in appearance of abutting or adjacent pieces are acceptable if they are within one-half of the range of approved Samples. Noticeable variations in the same piece are unacceptable. Variations in appearance of other components are acceptable if they are within the range of approved Samples and are assembled or installed to minimize contrast.

B. Mill Finish: AA-M12, nonspecular as fabricated.

C. Clear Anodic Finish: AAMA 611, AA-M12C22A41.

PART 3 - EXECUTION

3.1 INSTALLATION, GENERAL

A. Set railings accurately in location, alignment, and elevation; measured from established lines and levels and free of rack.

1. Do not weld, cut, or abrade surfaces of railing components that are coated or finished after fabrication and that are intended for field connection by mechanical or other means without further cutting or fitting.
2. Set posts plumb within a tolerance of 1/16 inch in 3 feet.
3. Align rails so variations from level for horizontal members and variations from parallel with rake of steps and ramps for sloping members do not exceed 1/4 inch in 12 feet.

B. Control of Corrosion: Prevent galvanic action and other forms of corrosion by insulating metals and other materials from direct contact with incompatible materials.

1. Coat, with a heavy coat of bituminous paint, concealed surfaces of aluminum that are in contact with grout, concrete, masonry, wood, or dissimilar metals.

3.2 ANCHORING POSTS

A. Sleeve type: Use metal sleeves preset and anchored into concrete for installing posts. After posts are inserted into sleeves, fill annular space between post and sleeve with nonshrink, nonmetallic grout or anchoring cement, mixed and placed to comply with anchoring material manufacturer's written instructions.

B. Post-Installed anchors: Fasten post base flanges to concrete in accordance with the Drawings and the Anchorage in Concrete and Masonry section.

C. Anchor posts to metal surfaces with oval flanges, angle type, or floor type as required by conditions, connected to posts and to metal supporting members.

3.3 ATTACHING RAILINGS

A. Attach railings to wall with wall brackets. Locate brackets as indicated or, if not indicated, at spacing required to support structural loads.

B. Secure wall brackets and railing end flanges to building construction as follows:

1. For concrete and solid masonry anchorage, use drilled-in expansion shields and hanger or lag bolts.
2. For hollow masonry anchorage, use toggle bolts.
3. For wood stud partitions, use hanger or lag bolts set into studs or wood backing between studs. Coordinate with carpentry work to locate backing members.
4. For steel-framed partitions, use hanger or lag bolts set into wood backing between studs. Coordinate with stud installation to locate backing members.
5. For steel-framed partitions, use self-tapping screws fastened to steel framing or to concealed steel reinforcements.
6. For steel-framed partitions, use toggle bolts installed through flanges of steel framing or through concealed steel reinforcements.

3.4 ADJUSTING AND CLEANING

A. Touchup Painting: Immediately after erection, clean field welds, bolted connections, and abraded areas of shop paint, and paint exposed areas with the same material as used for shop painting to comply with SSPC-PA 1 requirements for touching up shop-painted surfaces.

B. Galvanized Surfaces: Clean field welds, bolted connections, and abraded areas, and repair galvanizing to comply with ASTM A780.

End of Section

SECTION 05530

METAL GRATINGS

PART 1 - GENERAL

1.1 RELATED DOCUMENTS

A. Drawings and general provisions of the Contract, including General and Supplementary Conditions and Division 01 Specification Sections, apply to this Section.

1.2 SUMMARY

A. Section includes metal bar gratings.

B. Related Requirements:

1. Section 055300 "Structural Metals" for structural metal framing system components and metal framed stairs.
2. Section 055213 "Metal Railings" for metal pipe and tube handrails and railings.

1.3 COORDINATION

A. Coordinate selection of shop primers with topcoats to be applied over them. Comply with paint and coating manufacturers' written instructions to ensure that shop primers and topcoats are compatible with one another.

B. Coordinate installation of anchorages for gratings, grating frames, and supports. Furnish setting drawings, templates, and directions for installing anchorages, including sleeves, concrete inserts, anchor bolts, and items with integral anchors, that are to be embedded in concrete or masonry. Deliver such items to Project site in time for installation.

1.4 ACTION SUBMITTALS

A. Product Data: For the following:

1. Clips and anchorage devices for gratings.
2. Paint products.

B. Shop Drawings: Include plans, sections, details, and attachments to other work.

1.5 INFORMATIONAL SUBMITTALS

A. Mill Certificates: Signed by manufacturers of stainless steel certifying that products furnished comply with requirements.

B. Welding certificates.

C. Paint Compatibility Certificates: From manufacturers of topcoats applied over shop primers certifying that shop primers are compatible with topcoats.

1.6 QUALITY ASSURANCE

A. Welding Qualifications: Qualify procedures and personnel according to the following:

1. AWS D1.1/D1.1M, "Structural Welding Code - Steel."
2. AWS D1.2/D1.2M, "Structural Welding Code - Aluminum."
3. AWS D1.3/D1.3M, "Structural Welding Code - Sheet Steel."
4. AWS D1.6/D1.6M, "Structural Welding Code - Stainless Steel."

1.7 FIELD CONDITIONS

A. Field Measurements: Verify actual locations of walls and other construction contiguous with gratings by field measurements before fabrication.

PART 2 - PRODUCTS

2.1 MANUFACTURERS

A. Manufacturers: Subject to compliance with requirements, provide products by one of the following:

1. Fisher & Ludlow; a NUCOR Company.
2. Harsco Industrial IKG, a division of Harsco Corporation.
3. Ohio Gratings, Inc.

2.2 METAL BAR GRATINGS

A. Metal Bar Grating Standards: Comply with NAAMM MBG 531, "Metal Bar Grating Manual

B. Welded Steel Grating:

1. Bearing Bar Spacing: 1-3/16 inches o.c.

2. Bearing Bar Depth: As indicated on Drawings.
3. Bearing Bar Thickness: 3/16 inch minimum.
4. Crossbar Spacing: 4 inches o.c.
5. Traffic Surface: Plain, unless indicated otherwise on the Drawings.
6. Steel Finish: Hot-dip galvanized with a coating weight of not less than 1.8 oz./sq. ft. of coated surface.

C. Pressure-Locked, Stainless-Steel Grating: Fabricated by pressing rectangular flush-top crossbars into slotted bearing bars or swaging crossbars between bearing bars.

1. Bearing Bar Spacing: 1-3/16 inches o.c.
2. Bearing Bar Depth: As indicated on Drawings.
3. Bearing Bar Thickness: 3/16 inch minimum.
4. Crossbar Spacing: 4 inches o.c.
5. Traffic Surface: Plain, unless indicated otherwise on Drawings.
6. Finish: Mill finish.

D. Pressure-Locked, Rectangular-Bar Aluminum Grating: Fabricated by pressing rectangular flush-top crossbars into slotted bearing bars or swaging crossbars between bearing bars.

1. Bearing Bar Spacing: 1-3/16 inches o.c.
2. Bearing Bar Depth: As indicated on Drawings.
3. Bearing Bar Thickness: 3/16 inch minimum.
4. Crossbar Spacing: 4 inches o.c.
5. Traffic Surface: Plain, unless indicated otherwise on Drawings.
6. Aluminum Finish: Mill finish.

2.3 FERROUS METALS

A. Steel Plates, Shapes, and Bars: ASTM A36.

B. Steel Bars for Bar Gratings: ASTM A36 or steel strip, ASTM A1011 or ASTM A1018.

C. Wire Rod for Bar Grating Crossbars: ASTM A510.

D. Uncoated Steel Sheet: ASTM A1011, structural steel, Grade 30.

E. Galvanized-Steel Sheet: ASTM A653, structural quality, Grade 33, with G90 coating.

F. Stainless-Steel Sheet, Strip, Plate, and Flat Bars: ASTM A240, Type 316L.

G. Stainless-Steel Bars and Shapes: ASTM A276, Type 316L.

2.4 ALUMINUM

A. General: Provide alloy and temper recommended by aluminum producer for type of use indicated, with not less than the strength and durability properties of alloy, and temper designated below for each aluminum form required.

B. Extruded Bars and Shapes: ASTM B221, alloys as follows:

1. 6061-T6 or 6063-T6, for bearing bars of gratings and shapes.
2. 6061-T1, for grating crossbars.

C. Aluminum Sheet: ASTM B209, Alloy 5052-H32.

2.5 FASTENERS

A. General: Unless otherwise indicated, provide Type 316 stainless-steel fasteners for exterior use and zinc-plated fasteners with coating complying with ASTM B633 or ASTM F1941, Class Fe/Zn 5, at exterior walls. Select fasteners for type, grade, and class required.

1. Provide stainless-steel fasteners for fastening aluminum.
2. Provide stainless-steel fasteners for fastening stainless steel.

B. Steel Bolts and Nuts: Regular hexagon-head bolts, ASTM A307, Grade A; with hex nuts, ASTM A563 and, where indicated, flat washers.

C. Stainless-Steel Bolts and Nuts: Regular hexagon-head annealed stainless-steel bolts, nuts, and, where indicated, flat washers; ASTM F593 for bolts and ASTM F594 for nuts, Alloy Group 2.

2.6 MISCELLANEOUS MATERIALS

A. Shop Primers: Provide primers that comply with the Protective Coatings section.

B. Universal Shop Primer: Fast-curing, lead- and chromate-free, universal modified-alkyd primer complying with MPI#79 and compatible with topcoat.

1. Use primer containing pigments that make it easily distinguishable from zinc-rich primer.

C. Epoxy Zinc-Rich Primer: Complying with MPI#20 and compatible with topcoat.

D. Galvanizing Repair Paint: High-zinc-dust-content paint complying with SSPC-Paint 20 and compatible with paints specified to be used over it.

E. Bituminous Paint: Cold-applied asphalt emulsion complying with ASTM D1187.

2.7 FABRICATION

A. Shop Assembly: Fabricate grating sections in shop to greatest extent possible to minimize field splicing and assembly. Disassemble units only as necessary for shipping and handling limitations. Use connections that maintain structural value of joined pieces. Clearly mark units for reassembly and coordinated installation.

B. Cut, drill, and punch material cleanly and accurately. Remove burrs and ease edges to a radius of approximately 1/32 inch unless otherwise indicated. Remove sharp or rough areas on exposed surfaces.

C. Form from materials of size, thickness, and shapes indicated, but not less than that needed to support indicated loads.

D. Fit exposed connections accurately together to form hairline joints.

E. Welding: Comply with AWS recommendations and the following:

1. Use materials and methods that minimize distortion and develop strength and corrosion resistance of base metals.
2. Obtain fusion without undercut or overlap.
3. Remove welding flux immediately.

F. Provide for anchorage of type indicated; coordinate with supporting structure. Fabricate and space the anchoring devices to secure gratings, frames, and supports rigidly in place and to support indicated loads.

1. Fabricate toeplates to fit grating units and weld to units in shop unless otherwise indicated.
2. Fabricate toeplates for attaching in the field.
3. Toeplate Height: 4 inches unless otherwise indicated.

G. Removable Grating Sections: Fabricate with banding bars attached by welding to entire perimeter of each section. Include anchors and fasteners of type indicated or, if not indicated, as recommended by manufacturer for attaching to supports.

1. Provide no fewer than four weld lugs for each heavy-duty grating section, with each lug shop welded to two bearing bars.
2. Provide no fewer than four saddle clips for each grating section containing rectangular bearing bars 3/16 inch or less in thickness and spaced 15/16 inch or more o.c., with each clip designed and fabricated to fit over two bearing bars.
3. Provide no fewer than four weld lugs for each grating section containing rectangular bearing bars 3/16 inch or less in thickness and spaced less than 15/16 inch o.c., with each lug shop welded to three or more bearing bars.

Interrupt intermediate bearing bars as necessary for fasteners securing grating to supports.

4. Provide no fewer than four flange blocks for each section of aluminum I-bar grating, with block designed to fit over lower flange of I-shaped bearing bars.
5. Furnish threaded bolts with nuts and washers for securing grating to supports.
6. Furnish self-drilling fasteners with washers for securing grating to supports.
7. Furnish galvanized malleable-iron flange clamp with galvanized bolt for securing grating to supports. Furnish as a system designed to be installed from above grating by one person.

    a. Manufacturers: Subject to compliance with requirements, provide products by one of the following:

        1) Kee Safety, Ltd.
        2) Lindapter International.

H. Fabricate cutouts in grating sections for penetrations indicated. Arrange cutouts to permit grating removal without disturbing items penetrating gratings.

1. Edge-band openings in grating that interrupt four or more bearing bars with bars of same size and material as bearing bars.

I. Do not notch bearing bars at supports to maintain elevation.

2.8 STEEL FINISHES

A. Finish gratings, frames, and supports after assembly.

B. Galvanizing: Hot-dip galvanize items as indicated to comply with ASTM A153 for steel and iron hardware and with ASTM A123 for other steel and iron products.

1. Do not quench or apply post galvanizing treatments that might interfere with paint adhesion.

C. Shop prime gratings not indicated to be galvanized unless otherwise indicated.

1. Shop prime with universal shop primer.

D. Preparation for Shop Priming: Prepare surfaces to comply with requirements indicated below:

1. Exterior Items: SSPC-SP 6/NACE No. 3, "Commercial Blast Cleaning."
2. Items Indicated to Receive Zinc-Rich Primer: SSPC-SP 6/NACE No. 3, "Commercial Blast Cleaning."
3. Other Items: SSPC-SP 7/NACE No. 4, "Brush-off Blast Cleaning."

E. Shop Priming: Apply shop primer to comply with SSPC-PA 1, "Paint Application Specification No. 1: Shop, Field, and Maintenance Painting of Steel," for shop painting.

PART 3 - EXECUTION

3.1 INSTALLATION, GENERAL

A. Fastening to In-Place Construction: Provide anchorage devices and fasteners where necessary for securing gratings to in-place construction. Include threaded fasteners for concrete and masonry inserts, through-bolts, lag bolts, and other connectors.

B. Cutting, Fitting, and Placement: Perform cutting, drilling, and fitting required for installing gratings. Set units accurately in location, alignment, and elevation; measured from established lines and levels and free of rack.

C. Provide temporary bracing or anchors in formwork for items that are to be built into concrete or masonry.

D. Fit exposed connections accurately together to form hairline joints.

1. Weld connections that are not to be left as exposed joints but cannot be shop welded because of shipping size limitations. Do not weld, cut, or abrade the surfaces of exterior units that have been hot-dip galvanized after fabrication and are for bolted or screwed field connections.

E. Attach toeplates to gratings by welding at locations indicated.

F. Field Welding: Comply with AWS recommendations and the following:

1. Use materials and methods that minimize distortion and develop strength and corrosion resistance of base metals.
2. Obtain fusion without undercut or overlap.
3. Remove welding flux immediately.

G. Corrosion Protection: Coat concealed surfaces of aluminum that will come into contact with grout, concrete, masonry, wood, or dissimilar metals, with a heavy coat of bituminous paint.

3.2 INSTALLING METAL BAR GRATINGS

A. General: Install gratings to comply with recommendations of referenced metal bar grating standards that apply to grating types and bar sizes indicated, including installation clearances and standard anchoring details.

B. Attach removable units to supporting members with type and size of clips and fasteners indicated or, if not indicated, as recommended by grating manufacturer for type of installation conditions shown.

C. Attach nonremovable units to supporting members by welding where both materials are same; otherwise, fasten by bolting as indicated above.

3.3 ADJUSTING AND CLEANING

A. Touchup Painting: Immediately after erection, clean field welds, bolted connections, and abraded areas of shop paint and paint exposed areas with same material as used for shop painting to comply with SSPC-PA 1 requirements for touching up shop-painted surfaces.

1. Apply by brush or spray to provide a minimum 2.0-mil dry film thickness.

B. Touchup Painting: Cleaning and touchup painting of field welds, bolted connections, and abraded areas of shop paint are specified in the Protective Coatings section.

C. Galvanized Surfaces: Clean field welds, bolted connections, and abraded areas and repair galvanizing to comply with ASTM A780.

End of Section

Section 05550

ANCHORAGE IN CONCRETE AND MASONRY

PART 1 - GENERAL

1-1. SCOPE. This section covers the design and installation of anchors in concrete and masonry. It includes cast-in-place anchor bolts and anchor rods, adhesive anchors for both threaded rods and reinforcing bars, expansion anchors, and undercut anchors.

1-2. GENERAL.

1-2.01. Anchors Designed by Engineer. Cast-in-place and post-installed anchors that are fully detailed on the Drawings have been designed by Engineer, and may not be changed to a different type without written approval of Engineer.

1-2.02. Anchors Designed by Contractor's Suppliers. Contractor's material suppliers shall be responsible for design of anchors for railings, ladders, equipment, pre-engineered structures, and other manufactured items, as indicated in the Drawings and Specifications. Anchors shall be designed for all operating conditions, including wind and seismic loadings when indicated in the Meteorological and Seismic Design Criteria section. Cast-in-place anchors shall be used unless post-installed types are indicated on the Drawings or accepted by Engineer. Adhesive anchors used in vibrating applications, such as for pumps, shall only be used if the manufacturer submits documentation indicating that the product is suitable for the service conditions.

1-2.03. Materials. Unless otherwise indicated, anchors of structural steel members connected to concrete shall have a diameter of at least 3/4 inch, and structural members connected to masonry shall have a diameter of at least 5/8 inch. Anchors for ladders and equipment shall have a diameter of at least 1/2 inch. Anchors for pedestrian railing systems shall have a diameter of at least 3/8 inch.

Unless otherwise indicated on the Drawings, anchors used in the following locations and applications shall be of the indicated materials.

Cast-In-Place Anchor Bolts and Anchor Rods

Submerged locations	Stainless steel.
Locations subject to splashing	Stainless steel.
Buried locations	Stainless steel.

Anchorage of structural steel columns	Galvanized steel.
Other exterior locations	Galvanized steel.
Other interior locations	Carbon steel.

Adhesive, Expansion, and Undercut Anchors

Submerged locations	Stainless steel.
Locations subject to splashing	Stainless steel.
Buried locations	Stainless steel.
Anchorage of structural steel columns	Stainless steel.
Other exterior locations	Stainless steel.
Other interior locations	Carbon steel.

Adhesive, expansion, and undercut anchors may be used instead of cast-in-place anchors only where specifically indicated or permitted on the Drawings or with the specific acceptance by Engineer.

1-3. SUBMITTALS. Data, catalog cuts, and manufacturer's research reports (from independent organizations such as ICC-ES or IAPMO UES) indicating the manufacturer and types of adhesive anchors, expansion anchors, and undercut anchors to be supplied shall be submitted in accordance with the Submittals Procedures section.

If Contractor requests use of products other than those indicated herein, calculations may be required as part of the submittal package. Calculations shall be prepared by a professional engineer licensed in the state of the project, using methods and procedures required by the building code. Contractor shall demonstrate that the proposed substitute anchors are equivalent in all necessary criteria, including strength, spacing and edge distance limitations, embedment depth limitations, temperature limitations, and any other criteria required by Engineer.

1-4. DELIVERY, STORAGE, AND HANDLING. Materials shall be handled, transported, and delivered in a manner which will prevent damage or corrosion. Damaged materials shall be promptly replaced. Materials shall be shipped and stored in original manufacturer's packaging.

PART 2 - PRODUCTS

2-1. MATERIALS. Unless otherwise indicated on the drawings, materials shall be as indicated below.

Cast-In-Place Anchor Bolts and Anchor Rods	
Carbon steel	ASTM F1554, Grade 36 with compatible nuts.
Galvanized steel	ASTM F1554, Grade 36 with compatible nuts; hot-dip galvanized, ASTM F2329.
Stainless steel	Bolts, ASTM F593, Alloy Group 2 (minimum yield strength of 45 ksi); nuts, ASTM F594, Alloy Group 2.
Flat Washers	ANSI B18.22.1; of the same material as anchor bolts and nuts.
Expansion Anchors in Concrete	Products shall be single component anchors tested in accordance with ICC AC193, and shall have a manufacturer's research report in compliance with the applicable building code. The anchors shall be approved for use in cracked concrete, and for resisting seismic forces. Hilti "Kwik-Bolt TZ" or Powers Fasteners "Power-Stud+SD2" (carbon steel), "Power-Stud+SD4" (304 stainless steel), and "Power-Stud+SD6" (316 stainless steel).
Expansion Anchors in Grouted Concrete Masonry Units	Products shall be single component anchors tested in accordance with ICC AC01, and shall have a manufacturer's research report in compliance with the applicable building code. Hilti "Kwik-Bolt TZ Masonry Anchors", Simpson "Wedge-All", or Powers Fasteners "Power-Stud+ SD1".

Undercut Anchors in Concrete	Products shall be tested in accordance with ICC AC193, and shall have a manufacturer's research report in compliance with the applicable building code. Hilti "HDA Undercut Anchor" (carbon steel) and "HDA-R Undercut Anchor" (stainless steel), or Powers Fasteners "Atomic+ Undercut Anchor" (A36 carbon steel).
Adhesive Anchors in Concrete	Products shall be tested in accordance with ICC AC308, and shall have a manufacturer's research report in compliance with the applicable building code. The anchors shall be approved for use in cracked concrete, and for resisting seismic forces.
Threaded Rods and Nuts (Carbon Steel)	ASTM A307 or ASTM F1554 Grade 36.
Threaded Rods and Nuts (Carbon Steel)	ASTM F593, CW.
Reinforcing Bars	ASTM A615, Grade 60, deformed.
Reinforcing Bars, weldable	ASTM A706, Grade 60, deformed.
Adhesive	Hilti "HIT-HY 200", or Powers Fasteners "Pure 110+".
Adhesive Anchors in Grouted Concrete Masonry Units	Products shall be tested in accordance with ICC AC58, and shall have a manufacturer's research report in compliance with the applicable building code.
Threaded Rods and Nuts (Carbon Steel)	ASTM A307 or ASTM F1554 Grade 36.
Threaded Rods and Nuts (Stainless Steel)	ASTM F593 CW (Hilti or Powers systems), or ASTM A193 Grades B6, B8, or B8M (for Simpson system).
Adhesive	Hilti "HIT HY 70", Powers "AC100+ Gold", or Simpson "SET XP".

Adhesive Anchors in Hollow Concrete Masonry Units	Products shall be tested in accordance with ICC AC58, and shall have a manufacturer's research report in compliance with the applicable building code.
Threaded Rods and Nuts (Carbon Steel)	ASTM A307 or ASTM F1554 Grade 36.
Threaded Rods and Nuts (Stainless Steel)	ASTM F593 CW (Hilti or Powers systems), or ASTM A193 Grades B6, B8, or B8M (for Simpson system).
Adhesive	Hilti "HIT HY 70", Powers "AC100+ Gold", or Simpson "SET XP".
Screen Tubes	As recommended by the manufacturer.
Adhesive Anchors in Unreinforced Brick Masonry	Products shall be tested in accordance with ICC AC60, and shall have a manufacturer's research report in compliance with the applicable building code.
Threaded Rods and Nuts	ASTM A307.
Adhesive	Hilti "HIT HY 70", Simpson "SET".
Screen Tubes	As recommended by the manufacturer.

2-2. ANCHORS.

2-2.01. Cast-in-Place Anchor Bolts and Anchor Rods. Cast-in-place anchor bolts and anchor rods shall have forged heads or embedded nuts and washers. Anchors shall be delivered in time to permit setting prior to the placing of structural concrete or masonry grout. Anchor sleeves shall not be used unless acceptable to Engineer. Unless installed in sleeves, anchor bolts and anchor rods shall be provided with sufficient threads to permit a nut to be installed on the concrete side of the concrete form or the supporting template. Two nuts, a jam nut, and a washer shall be furnished for cast-in-place anchor bolts and anchor rods indicated on the Drawings to have locknuts; two nuts and a washer shall be furnished for cast-in-place anchor bolts and anchor rods without locknuts.

2-2.02. Adhesive, Expansion, and Undercut Anchors. When adhesive, expansion, or undercut anchors are indicated on the Drawings, only acceptable systems shall be used. Acceptable systems shall include only those systems and products specified or specifically indicated by product name on the

Drawings. Alternative anchoring systems may be used only when specifically accepted by Engineer.

Unless otherwise noted, single nuts and washers shall be provided with adhesive anchors, expansion anchors, and undercut anchors. Adhesive anchors shall be free of coatings that would weaken the bond with the adhesive.

Adhesive anchors in hollow CMU masonry and unreinforced brick masonry shall utilize screen tubes as recommended by the manufacturer.

PART 3 - EXECUTION

3-1. GENERAL. Anti-seize thread lubricant shall be liberally applied to projecting, threaded portions of stainless steel anchors immediately before tightening of the nuts.

3-1.01. Compliance With Manufacturer's Instructions. Post-installed anchors shall be installed in accordance with the manufacturer's printed installation instructions and all applicable requirements of the manufacturer's research report for the specific anchor system. If conflicts are found between the Drawings, the manufacturer's printed installation instructions, and the manufacturer's research report installation requirements, Contractor shall notify Engineer for resolution.

3-1.02. Special Inspection. Special inspection requirements for cast-in-place and post-installed anchors shall be as indicated in the Code-Required Special Inspections and Procedures section. Anchorage work shall be performed in a manner that allows the inspections to take place without adversely impacting the schedule.

3-2. CAST-IN-PLACE ANCHOR BOLTS AND ANCHOR RODS. Cast-in-place anchor bolts and anchor rods shall be carefully positioned with templates and secured in the forms prior to placing concrete, or in masonry bond beams prior to placing grout. Contractor shall verify that anchorage devices are positioned in accordance with the Drawings and with applicable equipment or structure submittal drawings.

Threads, bolts, and nuts spattered with concrete or masonry grout during placement shall be cleaned prior to final installation of the bolts and nuts.

Sleeves shall be filled with non-shrink grout.

3-3. ADHESIVE ANCHORS. Adhesive shall be statically mixed in the field during application. All proportioning and mixing of the components shall be in accordance with the manufacturer's recommendations.

Anchors or bars shall be installed in holes hammer drilled into hardened concrete or masonry. Drill shall be set to rotation-only mode when drilling into hollow CMU or into brick. Diameter of holes shall be 1/16 inch larger than the outside diameter of the rod or bar unless recommended otherwise by the anchor system manufacturer. Holes shall be prepared by removing all dust and debris using procedures recommended by the adhesive manufacturer.

Adhesive anchors and holes shall be clean, dry, and free of grease and other foreign matter at the time of installation. The adhesive shall be placed and the rods or bars shall be set in accordance with the recommendations of the manufacturer. Care shall be taken to ensure that all spaces and cavities are filled with adhesive, without voids.

3-3.01. Concrete Installation. Unless indicated otherwise on the Drawings, reinforcing bars shall be embedded to a depth of 15 bar diameters, and threaded rods shall be embedded to a depth that will develop the yield strength of the rod.

Adhesive anchors in concrete shall be installed under the following conditions.

Minimum Age of Concrete Prior to Anchor Installation	21 days.
Concrete Temperature Range	Maximum short-term temperature 162 F, maximum long-term temperature 110 F.
Moisture Condition	Dry concrete.
Type of Lightweight Concrete	N/A
Hole Drilling and Preparation	Hammer drill only.

Installation of adhesive anchors into concrete that are either horizontal or upwardly inclined shall be performed only by personnel certified by the ACI/CRSI Adhesive Anchor Installation Certification Program.

3-3.02. Masonry Installation. Anchors shall be installed to meet all criteria in the manufacturer's installation instructions and ICC-ES reports, including but not limited to minimum compressive strength at time of installation, minimum edge distances, minimum clearances from mortar joints, minimum anchor spacing, and use of screen tubes.

3-4. EXPANSION AND UNDERCUT ANCHORS. Expansion and undercut anchors shall be installed using all procedures and accessory devices recommended by the anchor manufacturer.

End of Section

Section 05551

METAL FABRICATIONS

PART 1 - GENERAL

1.1 RELATED DOCUMENTS

A. Drawings and general provisions of the Contract, including General and Supplementary Conditions and Division 01 Specification Sections, apply to this Section.

1.2 SUMMARY

A. Section Includes:
   1. Steel framing and supports for mechanical and electrical equipment.
   2. Steel framing and supports for applications where framing and supports are not specified in other Sections.
   3. Metal ladders.
   4. Ladder fall protection safety systems.
   5. Miscellaneous steel trim including steel angle corner guards, steel edgings.
   6. Abrasive metal nosings.
   7. Clevises and Turnbuckles.
   8. Eyebolts and Eyenuts
   9. Welded headed studs.
   10. Deformed bar anchors.

B. Products furnished, but not installed, under this Section include the following:
   1. Steel weld plates and angles for casting into concrete for applications where they are not specified in other Sections.

C. Related Requirements:
   1. Section 059900 "Structural Metals."

1.3 COORDINATION

A. Coordinate selection of shop primers with topcoats to be applied over them. Comply with paint and coating manufacturers' written recommendations to ensure that shop primers and topcoats are compatible with one another.

B. Coordinate installation of metal fabrications that are anchored to or that receive other work. Furnish setting drawings, templates, and directions for installing anchorages, including sleeves, concrete inserts, anchor bolts, and items with

integral anchors, that are to be embedded in concrete or masonry. Deliver such items to Project site in time for installation.

1.4 ACTION SUBMITTALS

A. Product Data: For the following:
   1. Metal nosings.

B. Shop Drawings: Show fabrication and installation details. Include plans, elevations, sections, and details of metal fabrications and their connections. Show anchorage and accessory items. Provide Shop Drawings for the following:

   1. Steel framing and supports for mechanical and electrical equipment.
   2. Steel framing and supports for applications where framing and supports are not specified in other Sections.
   3. Metal ladders.
   4. Ladder fall protection safety systems.
   5. Miscellaneous steel trim including steel angle corner guards, steel edgings.
   6. Abrasive metal nosings.
   7. Clevises and Turnbuckles.
   8. Eyebolts and Eyenuts
   9. Welded headed studs.
   10. Deformed bar anchors.

C. Samples for Verification: For each type and finish of extruded nosing.

D. Delegated-Design Submittal: For ladders, including analysis data signed and sealed by the qualified professional engineer responsible for their preparation.

1.5 INFORMATIONAL SUBMITTALS

A. Qualification Data: For professional engineer.

B. Mill Certificates: Signed by stainless-steel manufacturers, certifying that products furnished comply with requirements.

C. Welding certificates.

D. Paint Compatibility Certificates: From manufacturers of topcoats applied over shop primers, certifying that shop primers are compatible with topcoats.

E. Research/Evaluation Reports: For post-installed anchors, from ICC-ES.

1.6 QUALITY ASSURANCE

A. Welding Qualifications: Qualify procedures and personnel according to AWS D1.1/D1.1M, "Structural Welding Code - Steel."

B. Welding Qualifications: Qualify procedures and personnel according to the following:

1. AWS D1.1/D1.1M, "Structural Welding Code - Steel."
2. AWS D1.2/D1.2M, "Structural Welding Code - Aluminum."
3. AWS D1.6/D1.6M, "Structural Welding Code - Stainless Steel."

1.7 FIELD CONDITIONS

A. Field Measurements: Verify actual locations of walls and other construction contiguous with metal fabrications by field measurements before fabrication.

PART 2 - PRODUCTS

2.1 PERFORMANCE REQUIREMENTS

A. Delegated Design: Engage a qualified professional engineer, registered in the State of the project, to design ladders.

B. Structural Performance of Aluminum Ladders: Aluminum ladders shall withstand the effects of loads and stresses within limits and under conditions specified in ANSI A14.3.

C. Thermal Movements: Allow for thermal movements from ambient and surface temperature changes acting on exterior metal fabrications by preventing buckling, opening of joints, overstressing of components, failure of connections, and other detrimental effects.

1. Temperature Change: 120 deg F, ambient; 180 deg F, material surfaces.

2.2 METALS

A. Metal Surfaces, General: Provide materials with smooth, flat surfaces unless otherwise indicated. For metal fabrications exposed to view in the completed Work, provide materials without seam marks, roller marks, rolled trade names, or blemishes.

B. Steel Plates, Shapes, and Bars: ASTM A36.

C. Stainless-Steel Sheet, Strip, and Plate: ASTM A240 or ASTM A666, Type 316L.

D. Stainless-Steel Bars and Shapes: ASTM A276, Type 316L.

E. Rolled-Steel Floor Plate: ASTM A786, rolled from plate complying with ASTM A36 or ASTM A283, Grade C or D.

F. Rolled-Stainless-Steel Floor Plate: ASTM A793.

G. Abrasive-Surface Floor Plate: Steel plate with abrasive granules rolled into surface.
   1. Ross Technology Corporation, or approved equal.

H. Steel Tubing: ASTM A500, cold-formed steel tubing.

I. Steel Pipe: ASTM A53, Standard Weight (Schedule 40) unless otherwise indicated.

J. Slotted Channel Framing: Cold-formed metal box channels (struts) complying with MFMA-4.

   1. Size of Channels: As indicated.
   2. Material: Galvanized steel, ASTM A653, commercial steel with G90 coating; 0.108-inch nominal thickness.
   3. Material: Cold-rolled steel, ASTM A1008, commercial steel; 0.0966-inch minimum thickness; hot-dip galvanized after fabrication.

K. Cast Iron: Either gray iron, ASTM A48, or malleable iron, ASTM A47, unless otherwise indicated.

L. Aluminum Plate and Sheet: ASTM B209, Alloy 6061-T6.

M. Aluminum Extrusions: ASTM B221, Alloy 6063-T6.

N. Aluminum-Alloy Rolled Tread Plate: ASTM B632, Alloy 6061-T6.

O. Aluminum Castings: ASTM B26, Alloy 443.0-F.

P. Bronze Extrusions: ASTM B455, Alloy UNS No. C38500 (extruded architectural bronze).

Q. Bronze Castings: ASTM B584, Alloy UNS No. C83600 (leaded red brass) or No. C84400 (leaded semired brass).

R. Nickel Silver Extrusions: ASTM B151, Alloy UNS No. C74500.

S. Nickel Silver Castings: ASTM B584, Alloy UNS No. C97600 (20 percent leaded nickel bronze).

T. Forged Steel Clevises and Turnbuckles: AISI C-1035.

U. Forged Steel Eyebolts and Eyenuts: AISI C-1030, ANSI B 18.15 Type 2 shoulder pattern unless otherwise required.

V. Headed Concrete Anchors: ASTM A108 with a minimum 50,000 psi yield strength and minimum 60,000 psi tensile strength. TRW/Nelson or equal.

W. Deformed Bar Anchors: ASTM A496 with a minimum 70,000 psi yield strength and minimum 80,000 psi tensile strength. TRW/Nelson or equal.

2.3 FASTENERS

A. General: Unless otherwise indicated, provide Type 316L stainless-steel fasteners for exterior use and zinc-plated fasteners with coating complying with ASTM B633 or ASTM F1941, Class Fe/Zn 5, at exterior walls. Select fasteners for type, grade, and class required.

1. Provide stainless-steel fasteners for fastening aluminum.
2. Provide stainless-steel fasteners for fastening stainless steel.
3. Provide stainless-steel fasteners for fastening nickel silver.
4. Provide bronze fasteners for fastening bronze.

B. Steel Bolts and Nuts: Regular hexagon-head bolts, ASTM A307, Grade A; with hex nuts, ASTM A563; and, where indicated, flat washers.

C. Steel Bolts and Nuts: Regular hexagon-head bolts, ASTM A325, Type 3; with hex nuts, ASTM A563, Grade C3; and, where indicated, flat washers.

D. Stainless-Steel Bolts and Nuts: Regular hexagon-head annealed stainless-steel bolts, ASTM F593; with hex nuts, ASTM F594; and, where indicated, flat washers; Alloy Group 1.

E. Anchor Bolts: ASTM F1554, Grade 36, of dimensions indicated; with nuts, ASTM A563; and, where indicated, flat washers.

1. Hot-dip galvanize or provide mechanically deposited, zinc coating where item being fastened is indicated to be galvanized.

F. Anchors, General: Anchors capable of sustaining, without failure, a load equal to six times the load imposed when installed in unit masonry and four times the load imposed when installed in concrete, as determined by testing according to ASTM E488, conducted by a qualified independent testing agency.

G. Cast-in-Place Anchors in Concrete: Either threaded type or wedge type unless otherwise indicated; galvanized ferrous castings, either ASTM A47 malleable iron

or ASTM A27 cast steel. Provide bolts, washers, and shims as needed, all hot-dip galvanized per ASTM F2329.

H. Post-Installed Anchors: Torque-controlled expansion anchors or adhesive anchors, as specified in the Anchorage in Concrete and Masonry section.

1. Material for Interior Locations: Carbon-steel components zinc plated to comply with ASTM B633 or ASTM F1941, Class Fe/Zn 5, unless otherwise indicated.
2. Material for Exterior Locations and Where Stainless Steel Is Indicated: Alloy Group 1 stainless-steel bolts, ASTM F593, and nuts, ASTM F594.

I. Slotted-Channel Inserts: Cold-formed, hot-dip galvanized-steel box channels (struts) complying with MFMA-4, 1-5/8 by 7/8 inches by length indicated with anchor straps or studs not less than 3 inches long at not more than 8 inches o.c. Provide with temporary filler and tee-head bolts, complete with washers and nuts, all zinc-plated to comply with ASTM B633, Class Fe/Zn 5, as needed for fastening to inserts.

2.4 MISCELLANEOUS MATERIALS

A. Shop Primers: Provide primers that comply with the Protective Coatings section.

B. Universal Shop Primer: Fast-curing, lead- and chromate-free, universal modified-alkyd primer complying with MPI#79 and compatible with topcoat.

1. Use primer containing pigments that make it easily distinguishable from zinc-rich primer.

C. Water-Based Primer: Emulsion type, anticorrosive primer for mildly corrosive environments that is resistant to flash rusting when applied to cleaned steel, complying with MPI#107 and compatible with topcoat.

D. Epoxy Zinc-Rich Primer: Complying with MPI#20 and compatible with topcoat.

E. Shop Primer for Galvanized Steel: Primer formulated for exterior use over zinc-coated metal and compatible with finish paint systems indicated.

F. Galvanizing Repair Paint: High-zinc-dust-content paint complying with SSPC-Paint 20 and compatible with paints specified to be used over it.

G. Bituminous Paint: Cold-applied asphalt emulsion complying with ASTM D1187.

H. Nonshrink, Nonmetallic Grout: As indicated in the Grouting section.

I. Concrete: Comply with requirements in the Cast-in-Place Concrete section.

2.5 FABRICATION, GENERAL

A. Shop Assembly: Preassemble items in the shop to greatest extent possible. Disassemble units only as necessary for shipping and handling limitations. Use connections that maintain structural value of joined pieces. Clearly mark units for reassembly and coordinated installation.

B. Cut, drill, and punch metals cleanly and accurately. Remove burrs and ease edges to a radius of approximately 1/32 inch unless otherwise indicated. Remove sharp or rough areas on exposed surfaces.

C. Form bent-metal corners to smallest radius possible without causing grain separation or otherwise impairing work.

D. Form exposed work with accurate angles and surfaces and straight edges.

E. Weld corners and seams continuously to comply with the following:

1. Use materials and methods that minimize distortion and develop strength and corrosion resistance of base metals.
2. Obtain fusion without undercut or overlap.
3. Remove welding flux immediately.
4. At exposed connections, finish exposed welds and surfaces smooth and blended so no roughness shows after finishing and contour of welded surface matches that of adjacent surface.

F. Form exposed connections with hairline joints, flush and smooth, using concealed fasteners or welds where possible. Where exposed fasteners are required, use Phillips flat-head (countersunk) fasteners unless otherwise indicated. Locate joints where least conspicuous.

G. Fabricate seams and other connections that are exposed to weather in a manner to exclude water. Provide weep holes where water may accumulate.

H. Cut, reinforce, drill, and tap metal fabrications as indicated to receive finish hardware, screws, and similar items.

I. Provide for anchorage of type indicated; coordinate with supporting structure. Space anchoring devices to secure metal fabrications rigidly in place and to support indicated loads.

J. Where units are indicated to be cast into concrete or built into masonry, equip with integrally welded steel strap anchors, 1/8 by 1-1/2 inches, with a minimum 6-inch embedment and 2-inch hook, not less than 8 inches from ends and corners of units and 24 inches o.c., unless otherwise indicated.

2.6 MISCELLANEOUS FRAMING AND SUPPORTS

A. General: Provide steel framing and supports not specified in other Sections as needed to complete the Work.

B. Fabricate units from steel shapes, plates, and bars of welded construction unless otherwise indicated. Fabricate to sizes, shapes, and profiles indicated and as necessary to receive adjacent construction.

1. Fabricate units from slotted channel framing where indicated.
2. Furnish inserts for units installed after concrete is placed.

C. Fabricate supports for operable partitions from continuous steel beams of sizes recommended by partition manufacturer with attached bearing plates, anchors, and braces as recommended by partition manufacturer. Drill or punch bottom flanges of beams to receive partition track hanger rods; locate holes where indicated on operable partition Shop Drawings.

D. Galvanize miscellaneous framing and supports where indicated.

E. Prime miscellaneous framing and supports with zinc-rich primer where indicated.

2.7 METAL LADDERS

A. General:

1. Comply with ANSI A14.3.
2. For elevator pit ladders, comply with ASME A17.1/CSA B44.

B. Steel Ladders:

1. Space siderails as indicated on the Drawings.
2. Siderails: Continuous, size and type as indicated on the Drawings.
3. Rungs: Steel bars; size and shape as indicated on the Drawings.
4. Fit rungs in centerline of siderails; plug-weld and grind smooth on outer rail faces.
5. Provide nonslip surfaces on top of each rung, either by coating rung with aluminum-oxide granules set in epoxy-resin adhesive or by using a type of manufactured rung filled with aluminum-oxide grout.
6. Provide nonslip surfaces on top of each rung by coating with abrasive material metallically bonded to rung.

   a. Manufacturers: Subject to compliance with requirements, provide products by the following:

      1) Harsco Industrial IKG, a division of Harsco Corporation.

7. Support each ladder as indicated on the drawings with welded or bolted steel brackets.
8. Galvanize exterior ladders, including brackets.
9. Prime exterior ladders, including brackets and fasteners, with zinc-rich primer.

C. Aluminum Ladders:

1. Manufacturers: Subject to compliance with requirements, provide products by one of the following:

   a. Halliday Products.
   b. O'Keeffe's Inc.

2. Space siderails as indicated on the Drawings.
3. Siderails: Continuous, size and type as indicated on the Drawings.
4. Rungs: Extruded-aluminum tubes, size and shape as indicated on the Drawings.
5. Fit rungs in centerline of siderails; fasten by welding or with stainless-steel fasteners or brackets and aluminum rivets.
6. Support each ladder as indicated on the Drawings with welded or bolted aluminum brackets.
7. Provide minimum 72-inch-high, hinged security door with padlock hasp at foot of ladder to prevent unauthorized ladder use.

2.8 LADDER FALL PROTECTION SAFETY SYSTEM

A. General:

1. Fall protection safety systems shall be OSHA approved.
2. Fall protection safety system shall consist of a carrier, safety sleeve, lanyard, and connectors, and be suitable for operation with a body harness. Body harness provided by Owner.
3. Fall protection safety system shall be 3M Lad-Saf system, or equal.

2.9 METAL FLOOR PLATE

A. Fabricate from rolled-steel floor plate, rolled-stainless-steel floor plate, rolled-aluminum-alloy tread, or abrasive-surface floor plate as indicated on the Drawings:

1. Thickness: As indicated on the Drawings.

B. Provide angle supports as indicated on the Drawings.

C. Include angle stiffeners, and fixed and removable sections as indicated on the Drawings.

D. Provide flush bar drop handles for lifting removable sections, one at each end of each section.

2.10 STRUCTURAL-STEEL DOOR FRAMES – NOT USED.

2.11 MISCELLANEOUS STEEL TRIM

A. Unless otherwise indicated, fabricate units from steel shapes, plates, and bars of profiles shown with continuously welded joints and smooth exposed edges. Miter corners and use concealed field splices where possible.

B. Provide cutouts, fittings, and anchorages as needed to coordinate assembly and installation with other work.

1. Provide with integrally welded steel strap anchors for embedding in concrete or masonry construction.

C. Galvanize miscellaneous steel trim.

D. Prime miscellaneous steel trim with zinc-rich primer.

2.12 ABRASIVE METAL NOSINGS

A. Cast-Metal Units: Cast aluminum, with an integral-abrasive, as-cast finish consisting of aluminum oxide, silicon carbide, or a combination of both. Fabricate units in lengths necessary to accurately fit openings or conditions.

1. Supplier: Ross Technology Corporation, or approved equal.
2. Nosings: Cross-hatched units, 4 inches wide with 1-inch lip, for casting into concrete.
3. Nosings: Cross-hatched units, 1-1/2 by 1-1/2 inches, for casting into concrete.
4. Thresholds: Fluted-saddle-type units, 5 inches wide by 1/2 inch high, with tapered edges.
5. Thresholds: Fluted-interlocking- (hook-strip-) type units, 5 inches wide by 5/8 inch high, with tapered edge.
6. Thresholds: Plain-stepped- (stop-) type units, 5 inches wide by 1/2 inch high, with 1/2-inch step.

B. Extruded Units: Aluminum, with abrasive filler consisting of aluminum oxide, silicon carbide, or a combination of both, in an epoxy-resin binder. Fabricate units in lengths necessary to accurately fit openings or conditions.

1. Supplier: Nystrom, Inc. or approved equal.
2. Provide ribbed units, with abrasive filler strips projecting 1/16 inch above aluminum extrusion.
3. Provide solid-abrasive-type units without ribs.
4. Nosings: Square-back units, 4 inches wide, for casting into concrete steps.
5. Nosings: Beveled-back units, 4 inches wide with 1-3/8-inch lip, for surface mounting on existing stairs.
6. Nosings: Two-piece units, 3 inches wide, with subchannel for casting into concrete steps.

C. Provide anchors for embedding units in concrete, either integral or applied to units, as standard with manufacturer.

D. Drill for mechanical anchors and countersink. Locate holes not more than 4 inches from ends and not more than 12 inches o.c., evenly spaced between ends, unless otherwise indicated. Provide closer spacing if recommended by manufacturer.

1. Provide two rows of holes for units more than 5 inches wide, with two holes aligned at ends and intermediate holes staggered.

E. Apply bituminous paint to concealed surfaces of cast-metal units.

F. Apply clear lacquer to concealed surfaces of extruded units.

2.13 CAST-IRON WHEEL GUARDS – NOT USED

2.14 METAL DOWNSPOUT BOOTS – NOT USED

2.15 LOOSE BEARING AND LEVELING PLATES

A. Provide loose bearing and leveling plates for steel items bearing on masonry or concrete construction. Drill plates to receive anchor bolts and for grouting.

B. Galvanize plates.

C. Prime plates with zinc-rich primer.

2.16 STEEL WELD PLATES AND ANGLES

A. Provide steel weld plates and angles not specified in other Sections, for items supported from concrete construction as needed to complete the Work. Provide each unit with no fewer than two integrally welded steel strap anchors for embedding in concrete.

2.17 STOP PLATES AND GROOVES – NOT USED

2.18 BASIN EFFLUENT LAUNDERS – NOT USED

2.19 BASIN WEIR PLATES – NOT USED

2.20 SCUM BAFFLES – NOT USED

2.21 METERING WEIRS – NOT USED

2.22 BAR SCREENS – NOT USED

2.23 LIME TROUGHS – NOT USED

2.24 FINISHES, GENERAL

A. Finish metal fabrications after assembly.

B. Finish exposed surfaces to remove tool and die marks and stretch lines, and to blend into surrounding surface.

2.25 STEEL AND IRON FINISHES

A. Galvanizing: Hot-dip galvanize items as indicated to comply with ASTM A153 for steel and iron hardware and with ASTM A123 for other steel and iron products.

1. Do not quench or apply post galvanizing treatments that might interfere with paint adhesion.

B. Preparation for Shop Priming Galvanized Items: After galvanizing, thoroughly clean railings of grease, dirt, oil, flux, and other foreign matter, and treat with metallic phosphate process.

C. Shop prime iron and steel items not indicated to be galvanized unless they are to be embedded in concrete, sprayed-on fireproofing, or masonry, or unless otherwise indicated.

1. Shop prime with universal shop primer.

D. Preparation for Shop Priming: Prepare surfaces to comply with requirements indicated below:

1. Exterior Items: SSPC-SP 6/NACE No. 3, "Commercial Blast Cleaning."
2. Items Indicated to Receive Zinc-Rich Primer: SSPC-SP 6/NACE No. 3, "Commercial Blast Cleaning."
3. Items Indicated to Receive Primers Specified in the Protective Coatings section: SSPC-SP 6/NACE No. 3, "Commercial Blast Cleaning."
4. Other Items: SSPC-SP 3, "Power Tool Cleaning."

E. Shop Priming: Apply shop primer to comply with SSPC-PA 1, "Paint Application Specification No. 1: Shop, Field, and Maintenance Painting of Steel," for shop painting.

1. Stripe paint corners, crevices, bolts, welds, and sharp edges.

2.26 ALUMINUM FINISHES

A. As-Fabricated Finish: AA-M12.

B. Clear Anodic Finish: AAMA 611, Class I, AA-M12C22A41.

PART 3 - EXECUTION

3.1 INSTALLATION, GENERAL

A. Cutting, Fitting, and Placement: Perform cutting, drilling, and fitting required for installing metal fabrications. Set metal fabrications accurately in location, alignment, and elevation; with edges and surfaces level, plumb, true, and free of rack; and measured from established lines and levels.

B. Fit exposed connections accurately together to form hairline joints. Weld connections that are not to be left as exposed joints but cannot be shop welded because of shipping size limitations. Do not weld, cut, or abrade surfaces of exterior units that have been hot-dip galvanized after fabrication and are for bolted or screwed field connections.

C. Field Welding: Comply with the following requirements:

1. Use materials and methods that minimize distortion and develop strength and corrosion resistance of base metals.
2. Obtain fusion without undercut or overlap.
3. Remove welding flux immediately.
4. At exposed connections, finish exposed welds and surfaces smooth and blended so no roughness shows after finishing and contour of welded surface matches that of adjacent surface.

D. Fastening to In-Place Construction: Provide anchorage devices and fasteners where metal fabrications are required to be fastened to in-place construction. Provide threaded fasteners for use with concrete and masonry inserts, toggle bolts, through bolts, lag screws, wood screws, and other connectors.

E. Provide temporary bracing or anchors in formwork for items that are to be built into concrete, masonry, or similar construction.

F. Corrosion Protection: Coat concealed surfaces of aluminum that come into contact with grout, concrete, masonry, wood, or dissimilar metals with the following:

1. Cast Aluminum: Heavy coat of bituminous paint.
2. Extruded Aluminum: Two coats of clear lacquer.

3.2 INSTALLING MISCELLANEOUS FRAMING AND SUPPORTS – NOT USED

3.3 INSTALLING NOSINGS AND THRESHOLDS

A. Center nosings on tread widths unless otherwise indicated.

B. For nosings embedded in concrete steps or curbs, align nosings flush with riser faces and level with tread surfaces.

C. Seal thresholds exposed to exterior with elastomeric sealant complying with Section 079200 "Joint Sealants" to provide a watertight installation.

3.4 INSTALLING CAST-IRON WHEEL GUARDS – NOT USED

3.5 INSTALLING BEARING AND LEVELING PLATES

A. Clean concrete and masonry bearing surfaces of bond-reducing materials, and roughen to improve bond to surfaces. Clean bottom surface of plates.

B. Set bearing and leveling plates on wedges, shims, or leveling nuts. After bearing members have been positioned and plumbed, tighten anchor bolts. Do not

remove wedges or shims but, if protruding, cut off flush with edge of bearing plate before packing with nonshrink grout. Pack grout solidly between bearing surfaces and plates to ensure that no voids remain.

3.6 INSTALLING STOP PLATES AND GROOVES – NOT USED

3.7 INSTALLING BASIN EFFLUENT LAUNDERS – NOT USED

3.8 INSTALLING BASIN WEIR PLATES – NOT USED

3.9 ADJUSTING AND CLEANING

A. Touchup Painting: Immediately after erection, clean field welds, bolted connections, and abraded areas. Paint uncoated and abraded areas with the same material as used for shop painting to comply with SSPC-PA 1 for touching up shop-painted surfaces.

   1. Apply by brush or spray to provide a minimum 2.0-mil dry film thickness.

B. Touchup Painting: Cleaning and touchup painting of field welds, bolted connections, and abraded areas of shop paint are specified in the Protective Coatings section.

C. Galvanized Surfaces: Clean field welds, bolted connections, and abraded areas and repair galvanizing to comply with ASTM A780.

End of Section

Section 05990

STRUCTURAL METALS

PART 1 - GENERAL

1-1. SCOPE. This section covers the fabrication and erection of structural metal items.

Except as otherwise specified or indicated on the Drawings, all work shall conform to the applicable provisions of the AISC "Steel Construction Manual" (14th edition) with the exception of the "Code of Standard Practice for Steel Buildings and Bridges"; and the Aluminum Association "Specification for Aluminum Structures".

Special inspection during the fabrication and erection of structural steel, if required by the local building code, is addressed in the Code-Required Special Inspections and Procedures section.

Both inch-pound (English) and SI (metric) units of measurement are specified herein; the values expressed in inch-pound units shall govern.

1-2. SUBMITTALS. Complete data, fabrication drawings, and setting or erection drawings covering all structural and miscellaneous metal items shall be submitted in accordance with the Submittals Procedures section.

All bolted connections and welds shall be properly identified on the shop drawings. Welding procedures, welding procedure qualification records and welder qualifications shall be submitted.

Submittals for high strength bolts, tension control bolts and load indicator washers shall include statements from the bolt and washer manufacturers certifying satisfactory compliance with the governing standards and the specified tests.

Submittals for items that are designed by the fabricator shall include drawings sealed by a professional engineer registered in the state of the project. Data shall include confirmation that the design meets all applicable code requirements. Calculations shall be submitted when requested by Engineer.

1-3. DELIVERY, STORAGE, AND HANDLING. Materials shall be handled, transported, and delivered in a manner which will prevent bends, dents, significant coating damage, or corrosion. Damaged materials shall be promptly replaced. Structural and miscellaneous metal work shall be stored on blocking so that no metal touches the ground and water cannot collect thereon. The

material shall be protected against bending under its own weight or superimposed loads.

Bolting materials shall be stored indoors. Weld rod shall be stored in accordance with the supplier's instructions and AWS D1.1.

1-4. FABRICATOR QUALIFICATION. All fabricating plants providing structural steel shall be qualified fabricators who participate in the AISC Certification program and are designated an AISC Certified Plant, Category BU.

PART 2 - PRODUCTS

2-1. GENERAL. All materials needed for both shop and field assembly shall be furnished.

2-2. MATERIALS.

Steel

Shapes (W, WT)	ASTM A992.
Shapes (S, M, HP, C)	ASTM A36 or ASTM A572 Grade 50.
Other Shapes (angles)	ASTM A36.
Plates and Bars	ASTM A36.
Sheets	ASTM A1008 CS Type B or A1011 CS Type B.
Pipe	ASTM A53, Type E or S, Grade B (F_y = 35 ksi).
Round Structural Tubing	ASTM A500, Grade C (F_y = 46 ksi).
Square and Rectangular Structural Tubing	ASTM A500, Grade C (F_y = 50 ksi).
Bolts and Nuts	
Bolts, High Strength	ASTM A3125, Type 1.
Bolts, Tension Control Type (Twist off)	ASTM A3125.

Bolts, unfinished	ASTM A307.
Nuts, Heavy-Hex	ASTM A563, grade and finish compatible with bolts.
Nuts, Self-Locking	Prevailing torque type; IFI-100, Grade A.
Washers	
Flat, Hardened	ASTM F436, Type 1.
Lock	ANSI/ASME B18.21.1, helical spring type.
Beveled	ASTM F436.
Load Indicator	ASTM F959, compressible-washer-type direct tension indicator; type compatible with bolts tested in accordance with Article 10.2 of ASTM F959.
Threaded Rods (Including Hanger Rods for Pipe Supports)	ASTM A36. Threaded rods shall have sufficient threading to permit the maximum adjustment available. Continuously threaded rod is not acceptable for rods over 12 inches in length.
Forged Steel Sleeve Nuts	AISI C-1018, Grade 2.
Stainless Steel	
Shapes	ASTM A1069 or A276, Type 316L.
Plates	ASTM A240, Type 316L.
Pipe	ASTM A312, Grade TP316L.
Tube	ASTM A269, Grade TP316L.
Checkered Plate	ASTM A793, Type 316L, raised pattern A.

Bolts	ASTM F593, Alloy 2, minimum yield strength of 45 ksi.
Nuts	ASTM F594, Alloy Group shall match that of the bolts. Nuts shall have a minimum proof stress equal to or greater than the minimum full-size tensile strength of the bolts.
Washers	
Flat	ANSI/ASME B18.22.1, Type 316.
Lock	ANSI/ASME B18.21.1, helical spring type, Type 316.
Threaded Rods (Including Hanger Rods for Pipe Supports)	ASTM A593, Alloy Group 1 or 2, minimum yield strength of 45 ksi.
Aluminum	
Sheet and Plate	ASTM B209, Alloy 6061-T6.
Rolled Sections	ASTM B308, Alloy 6061-T6. All members shall be Aluminum Association standard shapes. Special shapes with sloping flange surfaces, or Army-Navy type members, shall not be used unless specifically indicated on the Drawings.
Rod and Bar (Rolled or Drawn)	ASTM B211, Alloy 6061-T6 or 2017-T4.
Extrusions	ASTM B221, Alloy 6063-T5 or T6.
Pipe	ASTM B429, Alloy 6061-T6.
Rivets	ASTM B316, Alloy 6061-T6.
Bolts, Aluminum	ASTM F468, Alloy 2024-T4.
Nuts, Aluminum	ASTM F467, Alloy 6061-T6.

Washers, Aluminum	
Flat	ANSI/ASME B18.22.1, Type 6061 T-6.
Lock	ANSI/ASME B18.21.1, helical spring type, Type 6061-T6.
Weld Metal (Steel Connections)	ANSI/AWS D1.1, Table 3.1, filler metal with minimum 70 ksi tensile strength unless otherwise required.
Rails	
Crane	ASTM A1.
Railroad	ASTM A1.
Shop Coatings	
Universal Primer	As indicated in the Protective Coatings section.
Epoxy Enamel	As indicated in the Protective Coatings section.
Galvanizing	ASTM A123, A153, A385, and F2329 as applicable.

2-3. STAIRS. Stairs shall be fabricated to the dimensions, arrangements and sizes indicated on the Drawings. Stairs shall be true to line and slope, shall be rigidly supported, and shall be braced and tightened to prevent movement. All treads shall be level and in perfect alignment and spacing.

After installation, stairs shall be rigid and shall not sway noticeably or deflect under foot traffic. If necessary to prevent noticeable movement, additional supports or bracing shall be provided.

2-3.01. Stair Design. Stairs shall be designed by the stair supplier in general accordance with details indicated on the Drawings. The design shall comply with all applicable provisions of the local building code, ANSI A117.1, and OSHA as applicable. The drawings shall be sealed by a professional engineer registered in the state of the project. If requested, calculations shall be submitted to Engineer.

The completed fabrications shall support a uniform live load of 100 lbs per square foot and a concentrated load of 300 lbs applied at the center of the span. Individual treads and platforms shall be designed to support a uniform live load of 100 lbs per square foot or a 300 lb concentrated live load applied on an area of 4 square inches. Vertical deflections under full live load shall be limited to span/240. Stairs and landings shall be braced or otherwise designed to avoid noticeable sidesway.

The stair design and details shall be coordinated with the handrailing and guardrailing supplied. Stair members shall be adequate to accept loads from the rail posts based upon the criteria in the Metal Railings section.

Connections between the stair members and the supporting structure shall be adequate to transfer all loadings, and shall be designed in accordance with all applicable provisions of the AISC manual and ACI 318 Chapter 17. The number and type of connections shall comply, at a minimum, with the Drawings. All necessary brackets, bolts, and anchors shall be provided.

2-3.02. Nosings. All stair treads shall have non-skid nosings, either fabricated integrally with the tread or attached with stainless steel bolts and self-locking nuts.

2-3.03. Grating Stairs. Treads shall be fabricated from grating material in accordance with the Metal Gratings section.

2-3.04. Pan Type Stairs. Risers and subtreads shall be fabricated from 12 USS gage steel and subplatforms from 10 USS gage steel. Fill depth shall be 2 inches for treads and 3 inches for platforms. Each riser shall have an integral non-slip nosing and a formed sanitary cove, located so that the toe of the cove will be at the surface of the concrete fill or applied finish.

2-3.05. Cast Aluminum Stairs. Risers and subtreads shall be fabricated from cast aluminum as indicated on the details on the Drawings.

2-4. CRANE SYSTEMS. NOT USED

2-5. STRUCTURAL STEEL BOLTED CONNECTIONS. Bolt holes shall have a diameter nominally 1/16 inch larger than the nominal bolt diameter. Bolt holes for one ply of vertical diagonal bracing connections may be oversized to a diameter nominally 3/16 inch larger than the nominal bolt diameter.

2-6. SHOP COATING. All items shall be shop coated as specified herein. The requirements for field painting are covered in the Protective Coatings section.

Contact surfaces of structural steel slip critical bolted connections shall not be shop coated. Contact surfaces of structural steel bearing type bolted connections may be shop coated.

2-6.01. Cleaning. Surfaces shall be dry and of proper temperature when coated, and shall be free of grease, oil, dirt, dust, grit, rust, loose mill scale, weld flux, slag, weld spatter, and other objectionable substances. Articles to be galvanized shall be pickled before galvanizing. All other ferrous metal surfaces shall be cleaned by solvent, high-speed power wire brushing or by blasting to the extent recommended by the paint manufacturer and as required in the Protective Coatings section.

2-6.02. Edge Grinding. Sharp projections of cut or sheared edges of ferrous metals which will be submerged in operation, except for items specified to be hot-dip galvanized, shall be ground to a radius as needed to ensure satisfactory paint adherence and as required in the Protective Coatings section.

2-6.03. Prime Painted Steel. Unless otherwise specified or indicated on the Drawings, all ungalvanized structural and miscellaneous steel shall be given a universal prime coat in the shop after fabrication. The dry film thickness of the universal primer shall be at least 5 mils. Steel surfaces shall be prime-coated as soon as practicable after cleaning. Steel shall not be moved or handled until the shop coat is dry and hard.

2-6.04. Galvanizing. Steel materials required to be galvanized are indicated on the Drawings. All galvanizing shall be done by the hot-dip process after fabrication. An approved zinc-rich paint shall be used to touch up minor coating damage, in accordance with ASTM A780. Materials with significant coating damage shall be regalvanized or replaced.

Bolts, nuts, and washers shall be galvanized when connected materials are galvanized or where indicated on the Drawings. The use of zinc-plated bolts will not be acceptable.

2-6.05. Stainless Steel. Unless otherwise specified, all items fabricated from stainless steel shall be thoroughly cleaned and degreased after fabrication. Pickling or a light blast cleaning shall produce a modest etch and remove all embedded iron and heat tint. Surfaces shall be subjected to a 24 hour water test or a ferroxyl test to detect the presence of residual embedded iron and shall be retreated as needed to remove all traces of iron contamination. Surfaces shall be adequately protected during shipping and handling to prevent contact with iron or steel objects or surfaces.

2-6.06. Aluminum. All surfaces of aluminum which will be in contact with concrete, mortar, or dissimilar metals shall be given a coat of epoxy enamel.

PART 3 - EXECUTION

3-1. STRUCTURAL STEEL ERECTION. Structural steel shall be erected so that individual pieces are plumb, level, and aligned within a tolerance of 1:500. The elevations of the top of floor and roof members shall be within 1/16 inch of the elevations indicated on the Drawings. The faces of girts and other supporting members for rigid wall panels shall be in vertical planes within a maximum variation of 1/8 inch.

All members and parts, as erected, shall be free of warps, local deformations, and unauthorized bends. All parts shall be assembled accurately as indicated on the Drawings. Light drifting will be permitted to draw parts together, but drifting to match unfair holes will not be permitted. Any enlargement of holes necessary to make connections in the field shall be done by reaming with twist drills and only with the approval of Engineer. Enlarging holes by burning will not be permitted.

Baseplates shall be set level in exact position and grouted in place.

3-1.01. Inspection and Testing. Special inspection will be performed as indicated in the Code Required Special Inspections and Procedures section. The erector shall provide access as needed to facilitate all inspections and shall provide timely notification during erection when inspection milestones are approaching.

3-1.02. Crane Rails. NOT USED

3-2. STRUCTURAL STEEL BOLTED CONNECTIONS. Unless otherwise indicated on the Drawings, bolted connections for structural steel, as defined in the AISC manual, shall be made with ASTM A3125 high strength bolts conforming to the "Specification for Structural Joints Using High-Strength Bolts" as approved by the Research Council on Structural Connections. The method of installation, pretensioning procedures, bolting equipment and tools shall likewise conform to the above referenced standard.

When assembled, all joint surfaces, including those adjacent to the bolt heads, nuts, or washers, shall be free of loose mill scale, dirt, burrs, oil, and other foreign material that would prevent solid seating of the parts.

Beveled washers shall be used when the bearing faces of bolted parts have a slope of 1:20 or greater with respect to a plane perpendicular to the bolt axis. Bolt length shall be increased as needed to accommodate the beveled washers.

If oversized holes are provided in an outer ply, a hardened flat washer shall be installed over each hole during bolting. Load indicator washers shall not be substituted for hardened flat washers required for oversized holes.

Tightening of each connection assembly shall progress systematically from the most rigid part of the joint toward the free edges until all have been sufficiently rotated or the load indicator washers on all bolts have been closed to the average gap stipulated by the load indicator washer manufacturer.

Except as otherwise indicated on the Drawings or specified herein, bolted connections shall be bearing type with threads excluded from the shear plane. Slip critical connections shall be used in diagonal bracing connections, where oversize holes or slotted holes parallel to the direction of the load are used, and where indicated on the Drawings.

Bolts in all structural steel connections, both bearing and slip critical, shall be fully pretensioned in accordance with the AISC standards unless specifically noted otherwise on the Drawings. The calibrated wrench method of pretensioning bolts will not be acceptable. Acceptable pretensioning methods are as follows:

Connection Type	Acceptable Pretensioning Method
Bearing	Turn of the nut method and load-indicator washers are acceptable. Tension control (twist-off) type bolts may be used only if approved by Engineer.
Slip-Critical	Load indicator washers.

3-2.01. Turn of the Nut Method. The bolt, nut, and material shall be match marked. A wax lumber marker or paint shall be used to clearly mark the assembly.

3-2.02. Load-Indicator Washers. Load indicator washers shall be installed in accordance with the manufacturer's recommendations, as supplemented herein. To facilitate proper tightening of fastener assemblies with load indicator washers, a hardened flat washer shall be installed under the turned element (bolt head or nut) and between the turned element and the load indicator washer protrusions, in all cases. Whenever possible, the load indicator washer shall be installed on the head end of the bolt. If the bolt head will not be visible for inspection of the indicator washer after installation, or if the bolt head must be turned to tighten the assembly, the load indicator washer may be installed on the nut end of the bolt.

3-2.03. Tension Control (Twist-off) Bolts. Patented tension control bolts shall be of equivalent size and strength to the indicated high strength bolts, and shall be installed in strict accordance with the manufacturer's instructions. Load-indicator washers are not required on tension control bolts.

3-4. STRUCTURAL, STAINLESS, AND MISCELLANEOUS STEEL WELDING. Welding and related operations shall conform to applicable provisions of AWS D1.1 for steel and AWS D1.6 for stainless steel. All welding shall be performed in accordance with written procedures, using only those joint details which have prequalified status. All welding shall be performed by welders qualified in accordance with the American Welding Society.

Welds not dimensioned on the Drawings shall be sized to develop the full strength of the least strength component of the connection.

Where structural or miscellaneous steel connections are welded, all butt and miter welds shall be continuous and, where exposed to view, shall be ground smooth. Intermittent welds shall have an effective length of at least 2 inches and shall be spaced not more than 6 inches apart.

Surfaces to be welded and surfaces within 2 inches of a weld shall be free from loose or thick scale, slag, rust, moisture, grease, paint and other foreign materials that would prevent proper welding or release objectionable fumes.

Only shielded metal arc, gas metal arc, flux cored arc, submerged arc, and gas tungsten arc welding are permitted. For flux cored arc welding, only E70xx one (1) or five (5) wire electrodes with supplemental gas shielding shall be permitted. Use of electroslag or electrogas welding processes or the short-circuiting transfer mode of the gas metal arc process will not be acceptable.

Field welded connections shall not be substituted for field bolted connections indicated on the Drawings.

3-5. STRUCTURAL AND MISCELLANEOUS ALUMINUM. Unless otherwise noted, all work shall conform to applicable provisions of the Aluminum Association "Specification for Aluminum Structures".

3-5.01. Connections. Connections not specifically detailed on the Drawings shall develop the full strength of the least strength member of the connections. Bolted connections shall be all-bolted bearing type, equipped with a helical spring lock washer under the stationary element (bolt head or nut) and a flat washer under the turned element. All bolts shall be fully tightened. Bolts and nuts for structural aluminum connections shall be stainless steel. A sufficient number of bolts shall be provided in each connection to develop the shear strength of the member.

Welded connections shall be made in accordance with the American Welding Society D1.2, Structural Welding Code - Aluminum. All welding shall be performed by welders qualified in accordance with American Welding Society.

Welds shall be free of porosity, cracks, holes, and flux. Welded connections shall not be substituted for bolted connections without prior approval of Engineer.

3-5.02. Erection. Structural aluminum shall be erected so that individual pieces are plumb, level, and aligned within a tolerance of 1:500. The elevation of horizontal members shall be within 1/16 inch of the elevation indicated on the Drawings.

End of Section

Section 07160

DAMPPROOFING

PART 1 – GENERAL

1-1. SCOPE. This section covers furnishing and installation of dampproofing for concrete.

PART 2 - PRODUCTS

2-1. MATERIALS. Materials to be used shall be as follows:

Coal Tar Epoxy	Ameron "Amercoat 78HB Coal Tar Epoxy, Carboline "Bitumastic 300 M", Tnemec "46H-413 Hi-Build Tneme-Tar", or Sherwin-Williams "Hi-Mil Sher-Tar Epoxy"
Epoxy Enamel	As specified in the Protective Coatings section

Membrane shall be a self-adhesive rubberized asphalt/polyethytlene waterproofing material with a minimum thickness of 1/16 inch (1.5 mm).

2-2. SURFACES TO BE DAMPPROOFED. Exterior wall surfaces which are poured against sheeting or undisturbed earth need not be dampproofed. The following concrete surfaces that are not in contact with treated or potable water shall be dampproofed:

a. All exterior concrete wall surfaces forming a part of an interior room or dry pit which will be in contact with earth backfill below finished grade and above the top of the footings or bottom slabs.

b. All exterior wall surfaces of cast-in-place and precast concrete electrical manholes and handholes below finished grade and above the top of the footings or bottom slabs.

c. All walls in contact with liquid where the opposite face is above grade or exposed in an interior room, except when waterproofing is specified.

PART 3 - EXECUTION

3-1. SURFACE PREPARATION. When dampproofing is applied, concrete surfaces shall be clean and dry. Concrete repair methods shall be acceptable to

the Engineer. Except where membrane is applied, new concrete shall cure at least 28 days before dampproofing material is applied. Concrete shall be allowed to cure in accordance with the membrane manufacturer's recommendation before membrane damproofing is applied. Concrete shall be prepared to receive the damproofing material as recommended by materials manufacturer.

All dirt, dust, sand, grit, mud, oil, grease, and other foreign matter shall be removed in accordance with ASTM D4258 and the surface abraded when recommended by the manufacturer of the dampproofing material. Abrading shall be done in accordance with ASTM D4259. Prior to application of the coating, the surfaces shall be thoroughly washed, or cleaned by air blasting, to remove all dust and residue.

3-2. APPLICATION. Dampproofing materials shall not be thinned unless recommended by the manufacturer. Dampproofing using coal tar epoxy shall be applied in at least two coats, with a total dry film thickness of at least 20 mils.

Surfaces not intended to be dampproofed shall be protected from contamination, discoloration, or other damage. Such surfaces shall be masked as necessary to protect uncoated areas and to confine the dampproofing to the intended limits.

Surfaces shall be dry and at recommended temperature when dampproofing is applied. Unless properly protected, coatings shall not be applied in wet, damp, or foggy weather or when windblown dust, dirt, or debris, or insects would collect on the coating. Dampproofing, other than low temperature membrane dampproofing, shall not be applied when the temperature of the air or the surface is below 50°F, unless approved by manufacturer. Low temperature membrane dampproofing may be applied at air and surface temperatures as low as 25°F if approved by manufacturer and acceptable to the Engineer.

Dampproofing shall be applied by brush, high pile rollers, or spray equipment complying with the manufacturer's recommendations. If blistering occurs, all blisters larger than 1/4 inch in diameter shall be broken before the subsequent coat is applied.

Emulsified asphalt shall be installed in accordance with manufacturer's recommendations and at the maximum coverage rate recommended by manufacturer that is acceptable to Engineer.

Membrane shall be installed in accordance with manufacturer's recommendations including the recommended primer.

End of Section

Section 08305

FLOOR ACCESS DOORS AND HATCHES

PART 1 - GENERAL

1-1. SCOPE. This section covers the fabrication and installation of cast-in-place, off-street, floor access doors and hatches. Manhole frames and covers are specified in the Sewer Manholes section.

Fabricated items which are indicated on the Drawings but not mentioned specifically herein shall be fabricated in accordance with the applicable requirements of this section.

1-2. GENERAL. Equipment furnished under this section shall be fabricated and assembled in full conformity with Drawings, Specifications, engineering data, instructions, and recommendations of the equipment manufacturer, unless exceptions are noted by Engineer.

Equipment shall be furnished complete with all components and accessories required for proper operation, and any additional materials or construction required by the manufacturer's design.

1-2.01. General Equipment Stipulations. The General Equipment Stipulations shall apply to all equipment furnished under this section. If requirements in this specification differ from those in the General Equipment Stipulations, the requirements specified herein shall take precedence.

1-2.02. Seismic Design Requirements. Seismic design requirements for products specified herein shall be as indicated in the Meteorological and Seismic Design Criteria section.

1-3. SUBMITTALS.

1-3.01. Drawings and Data. Complete assembly and installation drawings, together with detailed specifications, capacities, and data covering material used, and accessories forming a part of the equipment furnished, shall be submitted in accordance with the Submittals Procedures section.

Submit confirmation of compliance with the requirements of the Meteorological and Seismic Design Criteria section.

1-4. DELIVERY, STORAGE, AND HANDLING. Shipping shall be in accordance with the Product Delivery Requirements section. Handling and storage shall be in accordance with the Product Storage and Handling Requirements section.

1-5. WARRANTY. The manufacturer shall guarantee against defects in material or workmanship for a warranty period of not less than 5 years.

PART 2 - PRODUCTS

2-1. GENERAL. Access doors and hatches shall be fabricated in conformity with dimensions, arrangements, sizes, and weights or thicknesses specified herein and as indicated on the Drawings.

All members and parts shall be free of warps, local deformations, and unauthorized bends. Holes and other provisions for field connections shall be accurately located and shop checked so that proper fit will result when the units are assembled in the field. All field connection materials shall be furnished.

2-2. ACCEPTABLE MANUFACTURERS. Access doors and hatches shall be as manufactured by Halliday Products, Bilco Company, or USF Fabrications, Inc.

2-3. DESIGN REQUIREMENTS. Door leaves shall be 1/4 inch minimum thickness plate material with as indicated on the Drawings. Leaves in hatches not subject to vehicular loading shall be designed to withstand a minimum live load as indicated on the Drawings, with a maximum deflection of 1/150th of the span. Leaves shall pivot so that the cover does not protrude above the channel frame.

Door and hatch frames shall be provided with anchorage devices into the concrete slab. Where required for drainage, channel frames shall be 1/4 inch thick with a cross sectional area large enough to allow adequate water drainage. A 1-1/2 inch drainage coupling shall be located in the channel frame. The frame shall be designed to empty through the coupling. Frames shall have a neoprene door cushion unless a specific door model without a cushion is specified.

Hatches shall be supplied with lifting operators, lift assist springs, and hold-open devices. All doors, except fire rated doors, shall automatically lock in the vertical position by means of a hold-open arm with release handle. A snap lock with a gasketed cover plug and removable turn handle shall be provided. The operators shall provide for smooth, easy and controlled door operation throughout the entire arc of opening and closing. Operation shall not be affected by temperature.

Fall protection grating panels shall be provided on doors and as indicated on the Drawings. The panels shall be aluminum or fiberglass grating panels designed to support a 300 psf loading. Panels shall be hinged along one edge and provided with a positive latch to maintain unit in an upright position. Provision for locking the panel in place shall be provided. All hardware shall be of non-corroding material.

2-4. MATERIALS. Floor access doors and hatches are indicated on the Drawings. Unless otherwise specified, materials, appurtenances, and finishes shall be the manufacturer's standard for each type of door and hatch indicated on the Drawings. Doors and hatches shall be odor resistant and/or fire rated only if specifically indicated on the Drawings.

If floor access doors and hatches are shown on the Drawings but not identified by manufacturer’s name and product number, Contractor shall request clarification from Engineer prior to ordering and shipping the equipment. For purposes of bidding the work, unidentified floor access doors and hatches shall be assumed to be galvanized steel with a drained channel frame, suitable for direct H-20 traffic loading with 30% impact factor.

2-5. FINISHES. Aluminum access doors and hatches shall be given a mill finish.

All aluminum surfaces in contact with concrete or mortar shall be given a heavy coat of epoxy enamel unless specified otherwise.

Steel doors shall be prime painted with manufacturer's standard primer or shall be hot-dip galvanized as indicated on the Drawings.

PART 3 - EXECUTION

3-1. INSTALLATION. Materials shall be erected and installed in conformity with the dimensions and arrangements specified or indicated on the Drawings and as recommended by the manufacturer. Product finishes damaged during erection shall be repaired as recommended by the manufacturer. Hatch frames with drainage couplings shall be connected to the appropriate drainage system.

End of Section

Section 09940

PROTECTIVE COATINGS

PART 1 - GENERAL

1-1. SCOPE. This section covers field applied protective coatings, including surface preparation, protection of surfaces, inspection, and other appurtenant work for equipment and surfaces designated to be coated with heavy-duty maintenance coatings. Regardless of the number of coats previously applied, at least two field coats in addition to any shop coats or field prime coats shall be applied to all surfaces unless otherwise specified.

1-2. GENERAL. Cleaning, surface preparation, coating application, and thickness shall be as specified herein and shall meet or exceed the coating manufacturer's recommendations. When the manufacturer's minimum recommendations exceed the specified requirements, Contractor shall comply with the manufacturer's minimum recommendations. When equivalent products are acceptable to Engineer, Contractor shall comply with this Specification and the coating manufacturer's recommendations.

1-2.01. Governing Standards. All cleaning, surface preparation, coating application, thickness, testing, and coating materials (where available) shall be in accordance with the referenced standards of the following AWWA, ANSI, NACE, SSPC, NSF, and ASTM.

1-2.02. Delivery and Storage. All coating products shall be received and stored in accordance with the coating manufacturer's recommendations.

1-2.03. Coatings, Painting, and Linings Covered in Other Sections. Not used.

1-3. SUBMITTALS. Contractor shall submit color cards for all coatings proposed for use, together with complete descriptive specifications, manufacturer's product data sheet and the completed Coating System Data Sheets, to Engineer for review and color selection. Each product data sheet shall include application temperature limits including recoat time requirements for the ambient conditions at the site, including temperatures up to 130°F. Requests for review submitted directly to Engineer by coating suppliers will not be considered.

When the proposed products will be in contact with treated or raw water in potable water treatment facilities, Contractor shall submit certifications that the proposed systems are in compliance with ANSI/NSF 61.

Contractor shall submit a Coating System Data Sheet for each separately identified surface in the Metal Surfaces Coating Schedule, Concrete and Masonry Surfaces Coating Schedule, and the Miscellaneous Surfaces Coating

Schedule that will be used in the Project, using the appropriate Coating System Data Sheet forms (Figures 1-09940 and 2-09940) at the end of this section. Each field coating system shall be acceptable to the coating material manufacturer.

Coating System Data Sheets shall be assigned a unique number with a prefix letter based on the following:

Prefix	Surfaces	Fig.09940
A	Iron and steel (coated entirely in field)	1
A	Iron and steel (shop primed)	2
C	Concrete and concrete block	1
E	Equipment - submerged	1
E	Equipment - nonsubmerged	2
F	Nonferrous metal	1
G	Galvanized	1
H	High temperature	1
P	PVC and FRP	1

Each coating system that will be applied entirely in the field shall be assigned only a prefix letter and no suffix letter. Fig.1-09940 shall be submitted for each surface coated entirely in the field.

Each shop-applied coating system that includes one or more field applied coats shall be assigned both a prefix letter and suffix letter “F”. Fig.2-09940 shall be submitted for each surface having a shop applied coating and one or more field applied finish coats.

A separate Coating System Data Sheet shall be developed and submitted for each surface scheduled to be coated or variation or change in a coating system. The number identifying the surface and coating system shall be of the form $A1_1$ or $A1_2$-F. The subscript number shall be assigned by the Contractor so that each surface and coating system combination is uniquely identified. For example:

> $A1_1$-F may be assigned to “Epoxy – one coat to metal curbs for skylights and power roof ventilators that have been shop primed.”
>
> $A2_1$ may be assigned to “Epoxy – two coats to non-galvanized structural and miscellaneous steel exposed to view inside buildings.”

$C2_1$ may be assigned to “Epoxy – two coats to all concrete and concrete block in corrosive area (Except floors and surfaces scheduled to receive other coatings) which are exposed to view.”

$C2_2$ may be assigned to “Epoxy – two coats to walls, floors, and curbed areas, adjacent to corrosive chemical storage and feed equipment as indicated on the Drawings.”

The manufacturer’s standard colors will be acceptable for all coatings.

1-4. QUALITY ASSURANCE.

1-4.01. Coating System Data Sheet Certifications. The coating applicator and coating manufacturer shall review and approve in writing the coating manufacturer's written recommendations for the coating system and the intended service. Any variations from the Specifications or the coating manufacturers published recommendations shall be submitted in writing and approved by the coating manufacturer.

1-4.02. Special Interior Coating Systems. Not used.

PART 2 - PRODUCTS

2-1. ACCEPTABLE MANUFACTURERS.

2-1.01. Alternative Manufacturers. In addition to the coatings listed herein, equivalent products of other manufacturers that distribute globally will also be acceptable.

2-1.02. Equivalent Coatings. Whenever a coating is specified by the name of a proprietary product or of a particular manufacturer or vendor, it shall be understood as establishing the desired type and quality of coating. Other manufacturers' coatings will be accepted, provided that sufficient information is submitted to enable Engineer to determine that the proposed coatings are equivalent to those named. Information on proposed coatings shall be submitted for review in accordance with the Submittals Procedures section. Requests for review of equivalency will be accepted only from Contractor, and will be considered only after the contract has been awarded.

2-2. MATERIALS. All coatings shall be delivered to the job in original, unopened containers, with labels intact. Coatings shall be stored indoors and shall be protected against freezing. No adulterant, unauthorized thinner, or other material not included in the coating formulation shall be added to the coating for any purpose.

All coatings shall conform to the air quality regulations applicable at the location of use. Coating materials that cannot be guaranteed by the manufacturer to conform, whether or not specified by product designation, shall not be used

With the exception of heat resistant coatings, the coatings specified have been selected on the basis of the manufacturer's statement that the VOC content of the product is 2.8 lbs per gallon or less; however, it shall be the Contractor's responsibility to use only coating materials that are in compliance with the requirements of all regulatory agencies. Local regulations may require some coatings to have a lower VOC content than specified herein. The coatings specified may meet the VOC limits in the unthinned (as shipped) condition, but may exceed the limits if thinned according to the manufacturer's recommendations. In such case, the coatings shall not be thinned beyond the 2.8 lbs per gallon limit, and if the product cannot be thinned to suit the application method or temperature limits, another manufacturer's coating shall be used, subject to acceptance by Engineer.

Contractor shall be responsible for ensuring the compatibility of field coatings with each other or with any previously applied coatings. Coatings used in successive field coats shall be produced by the same manufacturer. The first field coat over shop coated or previously coated surfaces shall cause no wrinkling, lifting, or other damage to underlying coats.

2-2.01 Primers.

Universal Primer (tie coat)	PPG Amercoat "Amercoat 385 Epoxy", Carboline "Rustbond", ICI Devoe "Devran 224HS", Tnemec "Series 27 F.C. Typoxy", or Sherwin-Williams "Dura Plate 235".

2-2.02. Fillers and Surfacers.

Epoxy Concrete Block Filler	PPG Amercoat "Amerlock 400BF Epoxy Block Filler", Carboline "Sanitile 600", ICI Devoe "Truglaze 4015", Tnemec "Series 54-562", or Sherwin-Williams "Kem Cati-Coat HS".
Epoxy Concrete Filler and Surfacer	Tnemec "Series 218 MortarClad", PPG Amercoat "NuKlad 114A", Carboline "Carboguard 510", or

	Sherwin-Williams "Steel Seam FT910".

2-2.03. Intermediate and Finish Coatings.

Epoxy (NSF certified systems)	
Ferrous Metal Surfaces and Concrete Surfaces in Contact with Treated or Raw Water in Potable Water Facilities	PPG Amercoat "Amerlock 400 High-Solids Epoxy Coating", Carboline "Carboguard 891", ICI Devoe "Bar-Rust 233H" Tnemec "Series N140 Pota-Pox Plus", or Sherwin-Williams "Dura Plate 235 NSF"; immersion service.
Epoxy	
Concrete Floors	PPG Amercoat "Amerlock 400", Carboline "Carboguard 890", ICI Devoe "Devran 224HS", Tnemec "Series N69 Hi-Build Epoxoline II", or Sherwin-Williams "Armorseal 1000HS"; nonskid.
Ferrous Metal Surfaces and Masonry or Concrete Surfaces Other Than Floors	PPG Amercoat "Amercoat 385 Epoxy", Carboline "Carboguard 890", ICI Devoe Devran "224HS", Tnemec "Series N69 Hi-Build Epoxoline II", or Sherwin-Williams "Dura Plate 235".
Aliphatic Polyurethane	PPG Amercoat "Amercoat 450H", Carboline "Carbothane 134HG", ICI Devoe "Devthane 379H" Tnemec "Series 1074 Endura-Shield II", or Sherwin-Williams "Acrolon 218HS".
Coal Tar Epoxy	High-build coal tar epoxy; PPG Amercoat "Amercoat 78HB Coal Tar Epoxy", Carboline "Bitumastic 300 M", Tnemec "46H-413 Hi-Build Tneme-Tar", or Sherwin-Williams "Hi-Mil Sher-Tar Epoxy".
Medium Consistency Coal Tar	Carboline "Bitumastic 50" or Tnemec "46-465 H.B. Tnemecol".

Vinyl Ester	Tnemec "Series 120 Vinester" Carboline "Plasite 4110" or Sherwin-Williams "Magnalux 304FF".

PART 3 - EXECUTION

3-1. SURFACE PREPARATION. All surfaces to be coated shall be clean and dry and shall meet the recommendations of the coating manufacturer for surface preparation. Freshly coated surfaces shall be protected from dust and other contaminants. Oil and grease shall be completely removed by use of solvents or detergents before mechanical cleaning is started. The gloss on previously coated surfaces shall be dulled if necessary for proper adhesion of topcoats.

Surfaces shall be free of cracks, pits, projections, or other imperfections that would interfere with the formation of a smooth, unbroken coating film, except for concrete block construction where a rough surface is an inherent characteristic.

When applying touchup coating or repairing previously coated surfaces, the surfaces to be coated shall be cleaned as recommended by the coating manufacturer, and the edges of the repaired area shall be feathered by sanding or wire brushing to produce a smooth transition that will not be noticeable after the coating is applied. All coatings made brittle or otherwise damaged by heat of welding shall be completely removed.

3-1.01. Galvanized Surfaces. Galvanized surfaces shall be prepared for coating according to the instructions of the manufacturer of the epoxy. Any chemical treatment of galvanized surfaces shall be followed by thorough rinsing with clean water.

3-1.02. Ferrous Metal Surfaces. Ungalvanized ferrous metal surfaces shall be prepared for coating by using one or more of the following cleaning procedures specified here-in: solvents (SSPC-SP1); abrasive blasting (SSPC-SP5, -SP10, -SP6, or -SP7) power tools (SSPC-SP3 or -SP11); or hand tools (SSPC-SP2). Oil and grease shall be completely removed in accordance with SSPC-SP1 before beginning any other cleaning method. Surfaces of welds shall be scraped and ground as necessary to remove all slag and weld spatter. Tools which produce excessive roughness shall not be used.

All components of equipment that can be properly prepared and coated after installation shall be installed prior to surface preparation. Components that will be inaccessible after installation shall have the surfaces prepared and coated before installation. Motors, drive trains, and bearings shall be protected during surface preparation in accordance with the equipment manufacturer's recommendations.

All cut or sheared edges shall be ground smooth to a 1/8 inch minimum radius for all material 1/4 inch thickness and larger. For material thickness less than 1/4 inch all cut or sheared edges shall be ground smooth to a radius equal to 1/2 the material thickness. Grinding of rolled edges on standard shapes with a minimum radius of the 1/16 inch will not be required.

All ferrous metal surfaces shall have all welds ground smooth and free of all defects in accordance with NACE Standard SP0178, Appendix C, Designation C and sharp edges ground smooth, if not previously prepared in the shop. Instead of blending of the weld with the base metal as required by the NACE standard, it will be acceptable to furnish a welded joint that has a smooth transition of the weld to the base metal. All welds shall be ground smooth to ensure satisfactory adhesion of paint.

The cleaning methods and surface profiles specified herein are minimums, and if the requirements printed in the coating manufacturer's data sheets exceed the limits specified, the value printed on the data sheets shall become the minimum requirement.

3-1.02.01. Ferrous Metal Surfaces – Non-immersion Service. Ferrous metal surfaces, including fabricated equipment, in non-immersion service shall be cleaned to the degree recommended by the coating manufacturer for surfaces to be coated with coal tar epoxy, epoxy, and heat-resistant coatings, except galvanized surfaces. Surface preparation of ferrous metal surfaces in non-immersion service shall consist of abrasive blast cleaning to SSPC-SP6, and the first application of coating shall be performed on the same day. If more surface area is prepared than can be coated in one day, the uncoated area shall be blast cleaned again to the satisfaction of Engineer. Surface profile shall be as recommended by coating manufacturer, but not less than 2.0 mils.

3-1.02.02. Ferrous Metal Surfaces - Immersion Service. Surface preparation of ferrous metal surfaces in immersion service shall consist of abrasive blast cleaning to at least SSPC-SP10 and the first application of coating shall be performed on the same day. If more surface area is prepared than can be coated in one day, the uncoated area shall be blast cleaned again to the satisfaction of Engineer. Surface profile shall be as recommended by coating manufacturer, but not less than 3.5 mils.

3-1.03. Concrete Surfaces. All concrete surfaces shall be free of objectionable substances and shall meet the coating manufacturer's recommendations for surface preparation. Concrete surfaces shall be prepared in accordance with SSPC-SP13/NACE 6. Any other surface preparation recommended by the coating material manufacturer shall be brought to Engineer's attention and may be incorporated into the work if acceptable to Engineer.

All concrete surfaces shall be dry when coated and free from dirt, dust, sand, mud, oil, grease, and other objectionable substances. Oil and grease shall be completely removed by use of solvents or detergents before mechanical cleaning is started.

New concrete shall have cured for at least 4 weeks before coating is applied as recommended by the material manufacturer. Concrete surfaces shall be tested for capillary moisture in accordance with ASTM D4263. There shall be no capillary moisture when coatings are applied on concrete.

All surfaces to be coated shall be cleaned in accordance with ASTM D4258 and abraded in accordance with ASTM D4259. Surface profile shall be at least 25 percent of the dry film thickness specified for the coating system. Prior to application of the coating, the surfaces shall be thoroughly washed or cleaned by air blasting to remove all dust and residue. Spalled areas, voids, and cracks shall be repaired in accordance with the Concrete section and as acceptable to the Engineer. Fins and other surface projections shall be removed to provide a flush surface before application of coating.

Except where epoxy is applied as damp-proofing, the concrete surfaces, including those with bug holes less than 1 inch in any dimension, shall be prepared as recommended by the manufacturer, using an epoxy concrete filler and surfacer. Where coating with a vinyl ester the concrete filler and surfacer shall be as recommended by the manufacturer to be compatible with vinyl ester.

3-1.04. Concrete Block Surfaces. Voids and openings in concrete block surfaces shall be pointed. All exposed exterior surfaces and surfaces to be coated with epoxy, including the joints, shall be filled so that a continuous unbroken coating film is obtained.

3-1.05. Copper Tubing. All flux residue shall be removed from joints in copper tubing. Immediately before coating is started, tubing shall be wiped with a clean rag soaked in xylol.

3-1.06. Plastic Surfaces. All wax and oil shall be removed from plastic surfaces that are to be coated, including PVC and FRP, by wiping with a solvent compatible with the specified coating.

3-1.07. Hardware. Hardware items such as bolts, screws, washers, springs, and grease fittings need not be cleaned prior to coating if there is no evidence of dirt, corrosion, or foreign material.

3-1.08. Aluminum. When a coating system is required, remove all oil or deleterious substance with neutral detergent or emulsion cleaner or blast lightly with fine abrasive.

3-1.09. Stainless Steel. When a coating system is required, surface preparation shall conform to the coating manufacturer's recommendations.

3-2. MIXING AND THINNING. Coating shall be thoroughly mixed each time any is withdrawn from the container. Coating containers shall be kept tightly closed except while coating is being withdrawn.

Coating shall be factory mixed to proper consistency and viscosity for hot weather application without thinning. Thinning will be permitted only as necessary to obtain recommended coverage at lower application temperatures. In no case shall the wet film thickness of applied coating be reduced, by addition of coating thinner or otherwise, below the thickness recommended by the coating manufacturer. Thinning shall be done in compliance with all applicable air quality regulations.

3-3. APPLICATION. Coating shall be applied in a neat manner that will produce an even film of uniform and proper thickness, with finished surfaces free of runs, sags, ridges, laps, and brush marks. Each coat shall be thoroughly dry and hard before the next coat is applied. Each coat shall be a different color, if available. In no case shall coating be applied at a rate of coverage greater than the maximum rate recommended by the coating manufacturer.

Coating failures will not be accepted and shall be entirely removed down to the substrate and the surface recoated. Failures include but are not limited to sags, checking, cracking, teardrops, fat edges, fisheyes, or delamination.

3-3.01. Priming. Edges, corners, crevices, welds, and bolts shall be given a brush coat (stripe coat) of primer before application of the primer coat. The stripe coat shall be applied by a brush and worked in both directions. Special attention shall be given to filling all crevices with coating. When using zinc primers the stripe coat shall follow the initial prime coat.

Abraded and otherwise damaged portions of shop-applied coating shall be cleaned and recoated as recommended by the manufacturer of the finish coating. Welded seams and other uncoated surfaces, heads and nuts of field-installed bolts, and surfaces where coating has been damaged by heat shall be given a brush coat of the specified primer. Before the specified spot or touchup coating of metal surfaces, edges, corners, crevices, welds, and bolts in the area of the spot or touchup coating shall be given a brush coat of primer. This patch, spot, or touchup coating shall be completed, and the paint film shall be dry and hard, before additional coating is applied.

3-3.02. Epoxy. When used, epoxy shall be applied in accordance with the coating manufacturer's recommendations, including temperature limitations and protection from sunlight until top-coated.

When concrete is to be coated, coatings shall not be applied to concrete surfaces in direct sunlight or when the temperature of the concrete is rising. Preferably the coating shall be applied when the temperature of the concrete is dropping.

When applying high build epoxy coatings with a roller or brush and where a dry film thickness of at least 4-6 mils per coat is required, two or more coats shall be applied to achieve the recommended dry film thickness equal to a spray applied coating.

3-3.03. Coal Tar Epoxy. When used, the application of coal tar epoxy, including time limits for recoating, shall conform to the recommendations of the coating manufacturer.

When concrete is to be coated, coatings shall not be applied to concrete surfaces in direct sunlight or when the temperature of the concrete is rising. Preferably the coating shall be applied when the temperature of the concrete is dropping.

3-3.04. Vinyl Ester. When used, the application of vinyl ester coating system, including time limits for recoating and temperature requirements of the materials, shall conform to the recommendations of the coating manufacturer.

3-3.05. Film Thickness. The total coating film thickness including intermediate coats and finish coat, shall be not less than the following:

Type of Coating	Minimum Dry Film Thickness
Medium consistency coal tar	20 mils.
Coal tar epoxy (two coats)	20 mils.
Epoxy	
Floors (two coats)	10 mils.
Surfaces with first coat of epoxy and final coat of aliphatic polyurethane	7 mils (5 mils DFT for epoxy plus 2 mils DFT for aliphatic polyurethane).
Surfaces with first and second coat of epoxy and final coat of aliphatic polyurethane	12 mils (10 mils DFT for epoxy plus 2 mils DFT for aliphatic polyurethane).
Other surfaces (two coats)	10 mils.
Immersion service (three coats)	15 mils.
Flake-filled epoxy (two coats)	30 mils.
Vinyl ester	30 mils.
Zinc, epoxy, polyurethane	
Surfaces with first coat of zinc, intermediate coat of epoxy, and final coat of aliphatic polyurethane	10 mils, 3 mils zinc, 5 mils epoxy, plus 2 mils for aliphatic polyurethane.
Heat-resistant (silicone)	3 mils.
High heat-resistant (silicone)	3 mils.

Type of Coating	Minimum Dry Film Thickness
Other (one coat)	5 mils.
Other (two coats)	10 mils.

3-3.06. Weather Conditions. Coatings shall not be applied, except under shelter, during wet, damp, or foggy weather, or when windblown dust, dirt, debris, or insects will collect on freshly applied coating.

Coatings shall not be applied at temperatures lower than the minimum temperature recommended by the coating manufacturer, or to metal surfaces such as tanks or pipe containing cold water, regardless of the air temperature, when metal conditions are likely to cause condensation. When necessary for proper application, a temporary enclosure shall be erected and kept heated until the coating has fully cured.

Coatings shall not be applied at temperatures higher than the maximum temperature recommended by the coating manufacturer. Where coatings are applied during periods of elevated ambient temperatures, Contractor and the coatings manufacturer shall be jointly responsible to ensure that proper application is performed including adherence to all re-coat window requirements. Precautions shall be taken to reduce the temperature of the surface application, especially for metal, at elevated temperatures above 100°F including shading application area from direct sunlight, applying coating in the evening or at night, and ventilating the area to reduce the humidity and temperature,

Vinyl ester coating materials, when required, shall be maintained during transportation, storage, mixing, and application at the temperature required by the coating manufacturer, 35°F to 90°F.

3-4. REPAIRING FACTORY FINISHED SURFACES. Factory finished surfaces damaged prior to acceptance by Owner shall be spot primed and recoated with materials equivalent to the original coatings. If, in the opinion of Engineer, spot repair of the damaged area is not satisfactory, the entire surface or item shall be recoated.

3-5. PROTECTION OF SURFACES. Throughout the work Contractor shall use drop cloths, masking tape, and other suitable measures to protect adjacent surfaces. Contractor shall be responsible for correcting and repairing any damage resulting from its or its subcontractors' operations. Coatings spilled or spattered on adjacent surfaces which are not being coated at the time shall be immediately removed. Exposed concrete or masonry not specified to be coated which is damaged by coatings shall be either removed and rebuilt or, where authorized by Owner, coated with two coats of masonry coating.

3-6. FIELD QUALITY CONTROL. The following inspection and testing shall be performed: surface profile, visual inspection, and wet and dry film thickness testing. All inspection and testing shall be witnessed by Engineer.

3-6.01. Surface Profile Testing. The surface profile for ferrous metal surfaces shall be measured for compliance with the specified minimum profile. The surface profile for concrete shall comply with SSPC 13/NACE 6 Table 1 for severe service.

3-6.02. Visual Inspection. The surface of the protective coatings shall be visually inspected.

3.6.03. Film Thickness. Coating film thickness shall be verified by measuring the film thickness of each coat as it is applied and the dry film thickness of the entire system. Wet film thickness shall be measured with a gauge that will measure the wet film thickness within an accuracy of ±0.5 mil. Dry film thickness shall be measured in accordance with SSPC-PA 2.

3-6.04. Spark Testing. Not required.

3-6.05. Adhesion Testing. Not required.

3-7. FIELD PRIMING SCHEDULE. In general, steel and cast iron surfaces of equipment are specified to be shop primed. Any such surfaces which have not been shop primed shall be field primed. Damaged or failed shop coatings which have been determined unsuitable by Engineer shall be removed and the surfaces shall be field coated, including prime coat (if any). Galvanized, aluminum, stainless steel, and insulated surfaces shall be field primed. Primers used for field priming, unless otherwise required for repair of shop primers, shall be:

Surface To Be Primed	Material
Equipment, surfaces to be coated with	
Aliphatic polyurethane	Universal primer.
Epoxy	Same as finish coats.
Coal tar coating	Same as finish coats.
Vinyl ester	Same as finish coats.
Steel and cast iron, surfaces to be coated with	
Epoxy	Same as finish coats or inorganic zinc.
Coal tar coating	Same as finish coats.
Aluminum	Epoxy.
Galvanized	Epoxy.
Copper	Epoxy.
Stainless steel	Epoxy.

Surface To Be Primed	Material
Plastic surfaces, including PVC and FRP	Same as finish coats.
Insulated piping	As recommended by manufacturer of finish coats.
Concrete, surfaces to be coated with epoxy	
For damp-proofing	Epoxy.
For all other surfaces	Epoxy concrete filler and surfacer.
Concrete block exposed in exterior locations	Epoxy concrete block filler.
Concrete block to be coated with epoxy	Epoxy concrete block filler.

Unless otherwise recommended by the coating manufacturer or specified herein, priming will not be required on concrete, or concrete block, nor on metal surfaces specified to be coated with coal tar epoxy, and heat-resistant coatings. Concrete surfaces to be coated with epoxy shall be filled with epoxy concrete filler and surfacer so that a continuous film is obtained, except where concrete is damp-proofed with epoxy.

3-8. FINISH COATING SYSTEMS. The following schedule lists coatings systems and coating surface designations. See Article 1-3 for a definition of the surface designations.

No.	**Finish Coating Systems**	**Coating Surface Designation**						
		A	**C**	**E**	**F**	**G**	**H**	**P**
1.	Epoxy – One coat	**x**			**x**	**x**		
2.	Epoxy – Two coats	**x**	**x**	**x**	**x**	**x**		**x**
3.	Epoxy / NSF – Two coats		**x**	**x**				
4.	Epoxy – Three coats	**x**	**x**	**x**				
5.	Epoxy / NSF – Three coats	**x**	**x**	**x**				
6.	Epoxy – First coat Aliphatic polyurethane – Finish coat	**x**	**x**	**x**	**x**	**x**		**x**
7.	Epoxy – First and second coat Aliphatic polyurethane – Finish coat	**x**	**x**	**x**	**x**	**x**		
8.	Universal primer – First coat Aliphatic polyurethane – Finish coat	**x**		**x**				

No.	Finish Coating Systems	Coating Surface Designation						
		A	C	E	F	G	H	P
9.	Medium consistency coal tar – Two coats	x	x	x				
10.	Coal tar epoxy – Two coats	x	x	x				
11.	Vinyl ester – Two coats	x	x	x				
12.	Heat resistant – Two coats						x	
13.	High heat resistant – Two coats						x	
14.	Zinc primer – First coat Epoxy – Intermediate coat Aliphatic polyurethane – Final coat	x		x				
15.	Flake-filled epoxy	x		x				

3-8.01. Surfaces Not To Be Coated. Unless otherwise specified, the following surfaces shall be left uncoated:

Exposed aluminum, except ductwork.
Polished or finished stainless steel. Unfinished stainless steel, except flashings and counter flashings, shall be coated.
Nickel or chromium.
Galvanized surfaces, except piping, conduit, ductwork, and other items specifically noted.
Rubber and plastics, except as specified.
Exterior concrete.
FRP wastewater troughs.
Surfaces specified to be factory finished.

3-8.02. Shop Finishing. Items to be shop finished include the following. Shop finishing shall be in accordance with the coating manufacturer's recommendations.

a. All slide gates.
b. All conveyors.
c. Other surfaces where blast cleaning cannot be or is not recommended to be performed in the field.
d. Other items as otherwise specified.

3-8.03. Field Coating. Items to be field coated include the following. Field coating shall be in accordance with the field priming schedule, the coating schedule, and the manufacturer's recommendations.

a. Exterior surface of the sludge hopper.
b. Surfaces not indicated to be shop finished and surfaces where blast cleaning can be performed in the field.
c. All interior ferrous metal surfaces except stainless steel on the digester cover.
d. Other items as otherwise specified.

3-9. METAL SURFACES COATING SCHEDULE.

Surface To Be Coated	Finish Coating System
Unless otherwise specified, pumps, motors, speed reducers, and other machines and equipment exposed to view.	E8
Cast Iron and steel piping inside buildings, including piping to be insulated, valves, fittings, flanges, bolts, supports, and accessories, and galvanized surfaces after proper priming.	A2
Cast Iron and steel piping in immersion service including inside buildings, including valves, fittings, flanges, bolts, supports, and accessories, and galvanized surfaces after proper priming.	A4;A5
Cast Iron and steel piping above grade exposed to the elements and to view outdoors, including piping to be insulated, valves, fittings, flanges, bolts, supports, and accessories, and galvanized surfaces after proper priming.	A6;A7 ;A14
All metal surfaces, unless otherwise specified, which will be submerged or buried, all or in part, including valves, and scum baffles, and cast iron slide gates, but excluding piping laid in the ground.	E4;A10;E5
Miscellaneous castings, including manhole rings and covers, and manhole steps. (One coat, if not shop coated.)	E2;A10;E3

Surface To Be Coated	Finish Coating System
Cast iron and steel piping in manholes, wetwells, grit basin, aeration basin, and similar locations, including valves fittings, flanges, bolts, supports, and accessories.	A4;A10;E5
All metal harness anchorage for buried piping.	A10
Aluminum in contact with concrete.	F1
Engine exhaust piping.	H12

3-10. CONCRETE AND MASONRY SURFACES COATING SCHEDULE.

Surface To Be Coated	Finish Coating System
All concrete and concrete block in corrosive area (Except floors and surfaces scheduled to receive other coatings) which are exposed to view.	Indoor –C2 Outdoor –C7
All surfaces, including basin walls, in contact with treated or potable water.	C5
All interior surfaces of walls in a clearwell where the wall is also part of an interior room or dry pit.	C5

3-11. MISCELLANEOUS SURFACES COATING SCHEDULE. Not used.

3-12. PIPING IDENTIFICATION SCHEDULE. Exposed piping and piping in accessible chases shall be identified with lettering or tags designating the service of each piping system, marked with flow directional arrows, and color coded.

Piping scheduled to be color coded shall be completely coated with the indicated colors, except surfaces specified to remain uncoated shall include sufficiently long segments of the specified color to accommodate the lettering and arrows. All other piping shall be coated to match adjacent surfaces, unless otherwise directed by Engineer.

3-12.01. Location. Lettering and flow direction arrows shall be provided on pipe near the equipment served, adjacent to valves, on both sides of wall and floor penetrations, at each branch or tee, and at least every 50 feet in straight runs of

pipe. If, in the opinion of Engineer, this requirement will result in an excessive number of labels or arrows, the number required shall be reduced as directed.

3-12.02. Metal Tags. Where the outside diameter of pipe or pipe covering is 5/8 inch or smaller, aluminum or stainless steel tags shall be provided instead of lettering. Tags shall be stamped as specified and shall be fastened to the pipe with suitable chains. Pipe identified with tags shall be color coded as specified.

3-12.03. Lettering. Lettering shall be painted or stenciled on piping or shall be applied as snap-on markers. Snap-on markers shall be plastic sleeves, Brady "Bradysnap-On B-915", Seton "Setmark", or equal. Letter size shall be as follows:

Outside Diameter of Pipe or Covering	Minimum Height of Letters
5/8 inch and smaller	Metal tags -1/4 inch
3/4 to 4 inches	3/4 inch
5 inches and larger	2 inches

3-12.04. Color Coding and Lettering. All piping for the following services shall be color coded. Bands shall be 6 inches wide spaced along the pipe at 5 foot intervals. For services not listed, the color coding and lettering shall be as directed by the Engineer.

Piping Identification		
Service	**Color of Pipe**	**Color of Letters**
Activated Silica (solution)	Light brown with blue bands	White
Alum (solution)	Orange	Black
Ammonia	White	Black
Ash	Dark gray with green bands	White
Backwash waste	Light brown	White
Carbon	Black	White
Carbon Dioxide (liquid or gas)	Yellow with gray bands	Black
Carbon Dioxide (solution)	Yellow with black bands	Black
Chilled Water (supply or return)	Dark blue with red bands	White

Piping Identification		
Service	**Color of Pipe**	**Color of Letters**
Chlorine (gas, liquid, or vent)	Yellow	Black
Chlorine (solution)	Yellow	Black
Chlorine Dioxide	Yellow with violet bands	Black
Combustion Air	Dark green yellow bands	White
Compressed Air	Dark green	Black
Condensate	Light gray with brown bands	Black
Condenser Water (supply or return)	Dark blue with white bands	White
Digester Gas	Red with black bands	Black
Distilled Water	Light Blue with white bands	Red
Drain	Dark gray	White
Electrolyte	Aluminum with red bands	Black
Emergency Gas Treatment System – Indoors	Yellow with black bands	Black
Emergency Gas Treatment System – Outdoors	White	Black
Ferric Chloride	Orange	Black
Filtrate	Dark gray with red bands	White
Fire Protection Water	Red	White
Fluoride	Light blue with red bands	Black
Fuel Oil	Black	White
Gasoline	Black with red bands	White
Grease	Black with yellow bands	White
Grey Water	Purple	Black[1]
Grit	Light grey with black bands	White
Heated Sludge	Light brown with yellow bands	White
Heating Water (supply or return)	Light gray with black bands	Black
Hydrofluosilicic Acid	Yellow with blue bands	Black

Piping Identification		
Service	**Color of Pipe**	**Color of Letters**
Instrument Air	Light green with dark green bands	Black
Laboratory Special Gases	Match adjacent surface	Black
Laboratory Vacuum	Dark green with light green bands	Red
Lime Sludge	Light brown with white bands	White
Lime Slurry	Light green	Black
Liquid Alum	Yellow with orange bands	Black
Low Pressure Air (aeration supply)	Light green with orange bands	Black
Natural Gas Or Propane Gas	Yellow with red bands	Black
Nonpotable Water (downstream of backflow preventer)	Purple	Black[2]
Odor Control – Indoors	Dark green with light brown bands	White
Odor Control – Outdoors	White	Black
Oil – Hydraulic	Black with white bands	White
Other Hydrocarbons (identify)	Black	White
Ozone	Yellow with orange bands	Black
Plant Effuent Water	Purple	Black[3]
Plumbing Vents	Dark gray	White
Polymer	Orange with green bands	Black
Polyphosphate	Light green with red bands	Black
Potable Water (hot or cold)	Dark blue	White[4]
Potassium Permanganate	Violet	Black
Raw Water	Olive green	White
Refrigerant	Yellow with white bands	Black
Sample	Light gray with green bands	Black

Piping Identification		
Service	**Color of Pipe**	**Color of Letters**
Scum	Dark brown	White
Service Water	Dark blue with red bands	White
Settled Sewage	Light gray with brown bands	Black
Settled Sewage Service Water	Dark blue with orange bands	White
Settled Water	Aqua	Black
Sewage	Dark gray	Black
Sludge	Dark brown	White
Soda Ash (solution)	Light green with orange bands	Black
Sodium Chlorite	Orange with red bands	Black
Sodium Hydroxide (caustic)	Yellow with green bands	Black
Sodium Silica (solution)	Light brown with orange bands	White
Steam	Light gray with orange bands	Black
Steam Vent	Light gray with red bands	Black
Sulfur Dioxide	Light green with yellow bands	Black
Sulfur Dioxide (solution)	Orange with blue bands	Black
Sulfuric Acid	Yellow with red bands	Black
Vacuum Pump Discharge	Aluminum	Black

Notes:

1. Lettering shall read, “CAUTION: NONPOTABLE WATER, DO NOT DRINK.”.
2. Lettering shall be on a yellow background and shall read, “CAUTION: NONPOTABLE WATER, DO NOT DRINK.”. Each outlet on the nonpotable water line shall be similarly labeled.
3. Lettering shall read, “CAUTION: RECLAIMED WATER, DO NOT DRINK”.
4. Lettering shall be on a light green background.

Electrical conduit shall be coated to match adjacent ceiling or wall surfaces as directed by Engineer. Vent lines shall be coated to match surfaces they adjoin.

In addition, special coating of the following items will be required:

Item	Color
Valve handwheels and levers	Red
Hoist hooks and blocks	Yellow and black stripes

Numerals at least 2 inches high shall be painted on or adjacent to all accessible valves, pumps, flowmeters, and other items of equipment which are identified on the Drawings or in the Specifications by number.

End of Section

SURFACE DESCRIPTION	SYSTEM NO. -

SURFACE PREPARATION DESCRIPTION
☐ Solvent SSPC-SP1
☐ Ferrous Metal Nonimmersion SSPC-SP6
☐ Ferrous Metal Immersion
☐ SSPC-SP10
☐ SSPC-SP-5
☐ Other

COATING	DFT mils	MANUFACTURER AND PRODUCT
First Coat (Primer)		
Second Coat		
Third Coat		
Total System		Not less than minimum thickness specified.

Notes: (Attached if needed.)

Project:		
Coatings Manufacturer:		Initials _____
Painting Applicator:		Initials _____
BLACK & VEATCH	COATING SYSTEM DATA SHEET	Fig 1-09940

SHOP PRIMED SURFACE DESCRIPTION	SYSTEM NO. - -F

SURFACE PREPARATION DESCRIPTION
☐ Solvent SSPC-SP1 ☐ Other:

COATING	DFT mils	MANUFACTURER AND PRODUCT
Shop (Primer)		(Identify Product/Type)
Touchup		
Intermediate Coat		
Finish Coat		
Total System		Not less than minimum thickness specified.

Notes: (Attached if needed.)

Project:		
Coatings Manufacturer:		Initials _____
Painting Applicator:		Initials _____
BLACK & VEATCH	COATING SYSTEM DATA SHEET	Fig 2-09940

Section 11150

SUBMERSIBLE PUMPS

PART 1 - GENERAL

1-1. SCOPE. This section covers furnishing guiderail mounted, single-stage, submersible, non-clog, end suction centrifugal pumping units and controls as indicated herein or on the Drawings.

Pump application.	Stormwater Pumping
Number of pumps.	2
Pump tag numbers.	P-010
	P-020
Pump location.	Dennis St. Pump Station Wetwell

Each pumping unit shall be complete with a close-coupled, submersible electric motor, and all other appurtenances specified, or otherwise required for proper operation.

Each pumping unit, including motor and all integral controls, shall be rated and labelled for use in a Non-Hazardous Class 1, Division 1, Group D Class 1, Division 2, Group D area as defined by the National Electric Code.

1-2. GENERAL. Equipment furnished under this section shall be fabricated and assembled in full conformity with Drawings, Specifications, engineering data, instructions, and recommendations of the equipment manufacturer, unless exceptions are noted by Engineer. Hydraulic considerations and definition of terms shall be as set forth in the Hydraulic Institute Standards.

1-2.01. General Equipment Stipulations. The General Equipment Stipulations shall apply to all equipment furnished under this section. If requirements in this specification differ from those in the General Equipment Stipulations, the requirements specified herein shall take precedence.

1-2.02. Seismic Design Requirements. Seismic design requirement for products specified herein shall be as indicated in the Meteorological and Seismic Design Criteria section.

1-2.03. Tagging. Each item of equipment and each part shipped separately shall be tagged and identified with indelible markings for the intended service.

Tag numbers shall be clearly marked on all shipping labels and on the outside of all containers.

1-2.04. Power Supply. Unless otherwise indicated, power supply to the equipment shall be 480 volts, 60 Hz, 3 phase.

1-2.05. Identification. Pumps shall be identified in accordance with the Equipment and Valve Identification section.

1-3. SUBMITTALS.

1-3.01. Drawings and Data. Complete fabrication and assembly drawings, together with detailed specifications and data covering materials, parts, devices, and accessories forming a part of the equipment furnished, shall be submitted in accordance with the Submittals Procedures section. The data and specifications for each unit shall include, but shall not be limited to, the following:

Pumps

- Name of manufacturer.
- Type and model.
- Tag number.
- Pump designation.
- Pump location.
- Rotative speed.
- Size of suction nozzle.
- Size of discharge nozzle.
- Net weight of pump and motor only.
- Net weight with pedestal, when specified.
- Complete performance curves showing capacity versus head, NPSH required, pump efficiency, wire-to-water efficiency, and pump input power.
- Data on shop painting.

Motors

- Name of manufacturer.
- Type and model.
- Type of bearings and method of lubrication.
- Rated size of motor, hp [kW], and service factor.
- Insulation class and temperature rise.
- Full load rotative speed.
- Efficiency at full load and rated pump condition.
- Full load current.
- Locked rotor current.

Moisture Detection System

- Name of manufacturer.
- Type and model.
- Enclosure rating and layout if an enclosure is specified.

Electrical schematics and wiring diagram.
Published descriptive data on each item of equipment and all accessories, indicating all specific characteristics and options.

Control Components

Type and manufacturer.
Model.
Enclosure rating.
Published descriptive data on all components, indicating all specific characteristics and options.
Where liquid level sensors are provided, provide mounting details.

Seismic Design Requirements

Confirmation of compliance with the requirements of the Meteorological and Seismic Design Criteria section.

1-3.02. Operation and Maintenance Data and Manuals. Operation and maintenance manuals shall be submitted in accordance with the Submittals Procedures section. The operation and maintenance manuals shall be in addition to any instructions or parts lists packed with or attached to the equipment when delivered.

1-4. QUALITY ASSURANCE.

1-4.01. Balance. All rotating parts shall be accurately machined and shall be in as nearly perfect rotational balance as practicable. Excessive vibration shall be sufficient cause for rejection of the equipment. The mass of the unit and its distribution shall be such that resonance at normal operating speeds is avoided. In any case, the unfiltered vibration velocity, as measured at any point on the machine including top of motor, shall not exceed the maximum velocity as indicated in Figure 11.6.9.4 of the governing standard.

At any operating speed, the ratio of rotative speed to the critical speed of a unit or its components shall be less than 0.8 or more than 1.3.

1-5. SPARE PARTS. One Basic Repair Kit shall be provided as Spare parts.

Spare parts shall be suitably packaged with labels indicating the contents of each package. Spare parts shall be delivered to Owner as directed.

PART 2 - PRODUCTS

2-1. ACCEPTABLE PRODUCTS. Equipment furnished under this section shall be manufactured by Wilo without exception.

2-2. SERVICE CONDITIONS.

The equipment provided under this section shall be suitable for the following service conditions:

Seismic design requirements.	See Meteorological and Seismic Design Criteria section	
Maximum liquid temperature.	85	°F
Pumps start and stop against a closed valve.	No	
Site elevation.	See Meteorological and Seismic Design Criteria section	

All equipment furnished shall be designed to meet all specified conditions and to operate satisfactorily at the elevation indicated.

2-3. PERFORMANCE AND DESIGN REQUIREMENTS. Pumping units shall be designed for the performance and design requirements as follows:

Pump tag numbers.	P-010	
	P-020	
Rated head.	30	ft
Capacity at rated head.	4930	gpm
Operating head range for full speed continuous operation.	20 to 30	ft
Maximum nominal pump speed.	1200	rpm
Maximum power required at pump input shaft at any point from minimum operating head to shutoff head.	50	bhp
Efficiency at rated head, wire to water.	75	%
Wetwell depth (guide-rail mounted).	13.5	ft
Minimum liquid depth in wetwell (guide-rail and skid mounted)	5	ft

Pump tag numbers.	P-010	
	P-020	
Pump designed for reverse rotation at rated head.	No	
Minimum NSPHA at rated head.	40.6	ft
Maximum vibration velocity.	HIS	
Minimum pump discharge nozzle/elbow size.	12	in
Minimum test sphere diameter.	3	in
Maximum suction pressure	4	psig

All specified conditions shall be at rated speed unless otherwise indicated.

Overall (wire-to-water) efficiency for constant speed pumps shall include losses in the pump and motor.

The minimum hydrostatic test pressure shall be 1.5 times shutoff head plus max suction pressure.

Pump performance shall be stable and free from cavitation and noise throughout the specified operating head range at minimum suction submergences. The design running clearance between the impeller inlet and the casing wearing ring (if provided) shall be not less than 0.01 inch or 1 mil per inch of casing wearing ring diameter, whichever is greater.

Pumping units shall be designed so that maximum reverse rotation due to reverse flow at rated head will not cause damage to any component. Pump supplier shall coordinate this provision with the motor supplier.

2-4. MATERIALS.

Stator Housing, Oil Chamber Housing, Impeller Casing, and Impeller	Cast iron, ASTM A48.
Casing Wearing Ring	Martensitic stainless steel, Brinell 300+.
Bottom Wearing Plate	Cast iron, ASTM A48 with spiral grooves.

Shaft	Alloy steel, hard chrome plated; or martensitic stainless steel, AISI Type 416 or 420.
Mechanical Seals	2 tandem single type, oil lubricated with silicon or tungsten carbide seal rings at all points, except the upper rotating seal, which shall be carbon.
Discharge Base	Cast iron or fabricated steel.
Guiderails	Stainless steel pipe, ASTM A312, Schedule 40S.
Upper guiderail bracket, cable hooks, and chain hooks	AISI Type 304 stainless steel.
Pedestal Base	Cast iron or fabricated steel.
Epoxy Coating	
Primer & Finish Coat	Carboline "Carboguard 891" or Tnemec "Series N140 Pota-Pox Plus".

2-5. PUMP CONSTRUCTION.

2-5.01. Impeller Casing. The impeller casing shall have well-rounded water passages and smooth interior surfaces free from cracks, porosity, blowholes, or other irregularities. The discharge nozzle shall be flanged and sufficiently rigid to support the pumping unit under all operating conditions.

2-5.02. Impeller. The impeller shall be a semi-open one-piece casting with not more than two nonclog passages. The interior water passages shall have uniform sections and smooth surfaces and shall be free from cracks and porosity. The impeller shall be dynamically balanced and securely locked to the shaft by means of a key and self-locking bolt or nut.

2-5.03. Wearing Rings. Renewable wearing rings shall be provided in the casing and on the impeller.

For pumping units less than 100 hp a renewable wearing ring or an axially adjustable wearing plate shall be provided in the casing. Casing wearing ring shall be securely fastened to the impeller casing front cover to provide either an axial or radial running clearance. Axially adjustable wearing plate shall be arranged to permit adjustment of the axial running clearance between the

impeller and plate. The wearing plate shall have an outward spiralling groove designed to force stringy solids outward and away from the impeller.

2-5.04. Oil Chamber Housing. The oil chamber shall contain a drain plug and a vent plug. Food grade oil shall be used.

2-5.05. Mechanical Seals. Each pump shall be provided with two mechanical rotating shaft seals arranged in tandem and running in an oil chamber. Each interface shall be held in contact by an independent spring system designed to withstand maximum suction submergence. The seals shall require neither maintenance nor adjustment and shall be readily accessible for inspection and replacement.

Shaft seals lacking positively driven rotating members or conventional double mechanical seals which utilize a common single or double spring acting between the upper and lower units and requiring a pressure differential to offset external pressure and effect sealing, will not be acceptable. The seals shall not rely upon the pumped media for lubrication and shall not be damaged if the pumps are run unsubmerged for extended periods while pumping under load.

2-5.06. Sealing of Mating Surfaces. All mating surfaces of major components shall be machined and fitted with O-rings where watertight sealing is needed. Sealing shall be accomplished by O-ring contact on four surfaces and O-ring compression in two planes, without reliance on a specific fastener torque or tension to obtain a watertight joint. The use of elliptical O-rings, gaskets, or seals requiring a specific fastener torque value to obtain and maintain compression and watertightness will not be acceptable. The use of secondary sealing compounds, gasket cement, grease, or other devices to obtain watertight joints will not be acceptable.

2-5.07. Guiderail Mounted Base. A discharge base and discharge elbow shall be furnished by the pump manufacturer. The base shall be sufficiently rigid to firmly support the guiderails, discharge piping, and pumping unit under all operating conditions. The base shall be provided with one or more integral support legs or pads suitable for bolting to the floor of the wetwell. The face of the discharge elbow inlet flange shall be perpendicular to the floor and shall make contact with the face of the pump discharge nozzle flange. The diameter and drilling of the elbow outlet flange shall conform to ANSI B16.1, Class 125.

The pump and motor assembly shall be automatically connected to and supported by the discharge base and guiderails so that the unit can be removed from the wetwell and replaced without the need for operating personnel to enter the wetwell.

2-5.07.01. Sliding Bracket. Each guiderail mounted pumping unit shall be provided with an integral, self-aligning guiderail sliding bracket. The bracket shall

be designed to obtain a wedging action between flange faces as final alignment of the pump occurs in the connected position. The bracket shall maintain proper contact and a suitably sealed connection between flange faces under all operating conditions. The sliding bracket shall be nonsparking where the pump is installed in a hazardous area.

2-5.07.02. Guiderails. Each guide rail mounted pumping unit shall be equipped with one or more guiderails. Guiderails shall be sized to fit the discharge base and the sliding bracket and shall extend upwards from the discharge base to the location indicated on the Drawings. An upper guiderail bracket shall be provided at the pump access opening.

2-5.07.03. Lifting Chain. Each guide rail mounted pumping unit shall be provided with a chain suitable for removing and installing. The chain shall be stainless steel, galvanized, or plastic coated. Lifting chains shall have a tested yield point of at least 7 times the working load and shall be provided with durable permanent identification tags indicating the load rating. A suitable chain hook shall be provided at the top of the wetwell.

2-5.08. Pedestal Mounted Base. Not used.

2-5.09. Skid Mounted Base. Not used.

2-5.10. Access Hatch Cover. Not used.

2-5.11. Shop Painting. All iron and steel parts which will be in contact with pumped liquid or submerged after installation, including the inside of the casing and the discharge elbow, shall be shop cleaned in accordance with the coating manufacturer's recommendations. The exterior of the pump shall be painted with the epoxy coating system specified. The coating shall have a dry film thickness of at least 10 mils and shall consist of a prime (first) coat and one or more finish coats. At least 1 quart of the finish coat material shall be furnished with each pump for field touch-up.

All iron and steel parts inside the pump, including the surfaces of cast iron impellers, shall be painted with a suitable rust protective coating to protect the impeller during shipment, storage, and installation.

The shop painting of other surfaces shall be in accordance with the shop painting requirements in the General Equipment Stipulations.

For potable water applications, all coatings shall be NSF approved.

2-5.12. Hoist Assembly. Not used.

2-6. ELECTRIC MOTORS. Each pump shall be driven by an air-filled, totally submersible electric motor provided by the pump manufacturer. Motor nameplate rating shall exceed the maximum power required by the pump in the operating head range. Each motor shall be rated for the power supply provided to the pump, and shall have a service factor of 1.15. The stator housing shall be an air-filled, watertight casing. A cooling jacket shall encase the motor housing for each pump where needed to maintain adequate cooling. The cooling jacket shall require no external source of cooling water. Motor insulation shall be moisture resistant, Class H, 155°C. Each motor shall be NEMA Design B for continuous duty at 40°C ambient temperature, and designed for at least 10 starts per hour.

The motor bearings shall be antifriction, permanently lubricated type. The lower bearing shall be fixed to carry the pump thrust and the upper bearing free to move axially. The bearings shall have a calculated ABMA L_{10} Life Rating of 40,000 hours when operating at maximum operating head. Maximum shaft runout at the mechanical seals shall not exceed 2 mils at any point in the operating head range.

Each motor installed in a wetpit shall be capable of continuous operation in air (unsubmerged) for at least 24 hours under pump full load conditions, without exceeding the temperature rise limits for the motor insulation system.

Each pump shall be equipped with one or more multiconductor cable assemblies for power and control. Each multiconductor assembly containing power cables shall be provided with a separate grounding conductor. Each cable assembly shall bear a permanently embossed code or legend indicating the cable is suitable for submerged use. Cable sizing shall conform to NEC requirements.

All cables for wetwell mounted pumps shall be of sufficient length to terminate in a junction box outside the wetwell as indicated on the Drawings, with 10 feet of slack which will be coiled on a cable hook at the top of the wetwell. Each cable shall be supported by AISI Series 300 corrosion-resistant stainless steel Kellems or woven grips to prevent damage to the cable insulation. Mounting of cable supports in the wetwell shall be coordinated by Contractor to prevent damage to the cable.

The cable entry water seal shall include a strain relief and a grommet type seal designed so that a specific fastener torque is not required to ensure a watertight, submersible seal. The cable entry junction box and motor shall be separated by a stator lead sealing gland or a terminal board. The junction box shall isolate the motor interior from moisture gaining access through the top of the stator housing.

2-6.01. Adjustable Frequency Drives. Not used.

2-7. CONTROLS.

2-7.01. Liquid Level Sensors. Refer to Pressure and Level Instruments section for Liquid Level Sensons.

2-7.02. Pump Controls. Each motor shall be protected by one motor temperature switch embedded in each phase winding. Each switch shall be designed to operate at 140°C (± 5°C). Each switch shall be normally closed automatic reset type rated 5 amps at 120 volts ac. The switches shall be wired in series with end leads wired to terminals within the motor housing.

Each motor housing shall be provided with a moisture detection system complete with all sensors, control power transformers, intrinsically safe control modules, and relays. The moisture detection system shall be rated for a 12 volt dc supply. The moisture detection system shall provide two normally closed dry output contacts rated 5 amps at 120 volts ac. The contacts shall close when moisture is detected in the motor housing. Moisture detection sensors shall be furnished in the motor housing by the pump supplier. All moisture detection system components shall be furnished by the pump supplier.

2-8. SHOP TESTS.
Each pump shall be tested at the factory for capacity, power requirements, and efficiency at specified rated head, shutoff head, operating head extremes, and at as many other points as necessary for accurate performance curve plotting. All tests and test reports shall be made in conformity with the requirements and recommendations of the Hydraulic Institute Standards. Acceptance testing shall be per Table 11.6.5.4 Grade 1U, with no minus tolerance or margin allowed.

Wire-to-water efficiency shall be based on certified efficiency data of the variable frequency drive, and the isolation transformer if provided with the drive. Certified efficiency data shall be included in the report.

Five certified copies of a report covering each test shall be prepared by the pump manufacturer and delivered to Engineer not less than 10 days prior to the shipment of the equipment from the factory. The report shall include data and test information as stipulated in the Hydraulic Institute Standards, copies of the test log originals, test reading to curve conversion equations, and certified performance curves. The curves shall include head, bhp [brake kW], pump efficiency, and shop test NPSH available, plotted against capacity. The curves shall be easily read and plotted to scales consistent with performance requirements. All test points shall be clearly shown.

PART 3 - EXECUTION

3-1. INSTALLATION. Each pumping unit shall be installed in accordance with the Hydraulic Institute Standards, the Equipment Installation section, and as specified herein.

The equipment base for dry pit type pumping units shall be grouted after initial fitting and alignment, but before final bolting of connecting piping. Special care shall be taken to maintain alignment of pumping unit components. No stresses shall be transmitted to the pump flanges. After final alignment and bolting, connections to pumping equipment shall be tested for applied piping stresses by loosening the flange bolts. If any movement or opening of the joints is observed, piping shall be adjusted to proper fit.

Control cables shall be supported to prevent tension and damage. Mounting of cable supports in wetwells shall be coordinated by the pump supplier. Liquid level sensors shall operate freely and shall be adjusted to the levels indicated in the respective pump schedules, or in the electrical schematics or P&ID's. Each system of sensors shall be installed complete with all required mounting brackets, weights, galvanized steel mounting pipes and accessories, control panel transformers, auxiliary relays, cables, and junction boxes.

3-2. FIELD QUALITY CONTROL.

3-2.01. Installation Check. An experienced, competent, and authorized representative of the manufacturer shall visit the site of the Work and inspect, check, adjust if necessary, and approve the equipment installation. The representative shall be present when the equipment is placed in operation in accordance with Section 01650, Startup Requirements, and shall revisit the job site as often as necessary until all trouble is corrected and the equipment installation and operation are satisfactory in the opinion of Engineer.

The manufacturer's representative shall furnish a written report certifying that the equipment has been properly installed and lubricated; is in accurate alignment; is free from any undue stress imposed by connecting piping or anchor bolts; and has been operated under full load conditions and that it operated satisfactorily.

All costs for these services shall be included in the contract price.

3-2.02. Installation Supervision. Installation supervision by the manufacturer is not required.

End of Section

Section 11185

SUBMERSIBLE SUMP AND SEWAGE PUMPS

PART 1 - GENERAL

1-1. SCOPE. This section covers the furnishing and installation of medium and heavy duty single-stage, submersible, end suction centrifugal pumping units and controls for clear water (sump) service as specified and as indicated herein and on the Drawings.

Pump application.	Sump Pump
Number of pumps.	1
Pump tag numbers.	PSP-003
Pump location.	Dennis St. Pump Station Valve Vault

Piping, pipe supports, and accessories which are not an integral part of the equipment or are not specified herein are covered in other sections.

Each pumping unit shall be complete with a close-coupled, submersible electric motor; controls; and all other appurtenances specified or otherwise required for proper operation.

1-2. GENERAL. Equipment furnished and installed under this section shall be fabricated, assembled, erected, and placed in operating condition in full conformity with Drawings, Specifications, engineering data, instructions, and recommendations of the equipment manufacturer, unless exceptions are noted by Engineer. Hydraulic considerations and definition of terms shall be as set forth in the Hydraulic Institute Standards.

1-2.01. Coordination. Contractor shall verify that each component of the system is compatible with all other parts of the system; that all piping, materials, pumps, and motor sizes are appropriate; and that all devices necessary for a properly functioning system have been provided.

Where two or more units of the same class of equipment are required, they shall be the product of a single manufacturer; however, all the component parts of the system need not be the products of one manufacturer.

Where several manufacturers' names have been listed in this section as possible suppliers, only the products of the first manufacturer listed have been checked for size, functions, and features.

1-2.02. General Equipment Stipulations. The General Equipment Stipulations shall apply to all equipment furnished under this section. If requirements in this specification differ from those in the General Equipment Stipulations, the requirements specified herein shall take precedence.

1-2.03. Seismic Design Requirements. Seismic design requirements for products specified herein shall be as indicated in the Meteorological and Seismic Design Criteria section.

1-2.04. Power Supply. Power supply to equipment will be as indicated in the Perforamance and Design requirements.

1-2.05. Mechanical Identification. Pumps shall be identified in accordance with the Equipment and Valve Identification section.

1-3. SUBMITTALS.

1-3.01. Drawings and Data. Complete fabrication and assembly drawings, together with detailed specifications and data covering materials, parts, devices, and accessories forming a part of the equipment furnished, shall be submitted in accordance with the Submittals Procedures section. The data and specifications for each unit shall include, but shall not be limited to, the following:

Pumps
- Name of manufacturer.
- Type and model.
- Rotative speed.
- Size and type of pump discharge connection.
- Net weight of pump and motor only.
- Complete performance curves showing capacity versus head, bhp , NPSH required, and efficiency.
- Seal type and manufacturer.
- Data on shop painting.

Motors
- Name of manufacturer.
- Type and model.
- Type of bearings and method of lubrication.
- Rated size of motor, hp .
- Full load current.
- Locked rotor current.

Control Panel and Components
- Name of manufacturer.
- Type and model.
- Dimensions and net weight of complete panel.

Pump control sequence.
Liquid level sensors with mounting details and cable lengths, and sump controls.
Wiring diagrams.
Power and control cable type and size.

Accessories

Sump Cover

Material, thickness, and finish.
Overall dimensions.
Opening locations and dimensions.

Guiderail System

Materials.
Dimensions.

Seismic Design Requirements

Confirmation of compliance with the requirements of the Meteorological and Seismic Design Criteria section.

1-3.02. Operations and Maintenance Data and Manuals. Adequate operation and maintenance information shall be supplied as required in the Submittals Procedures section. Operation and maintenance manuals shall be submitted in accordance with the Submittals Procedures section.

1-4. DELIVERY, STORAGE, AND HANDLING. Shipping shall be in accordance with the Product Delivery Requirements section. Handling and storage shall be in accordance with the Product Storage and Handling Requirements section.

1-5. EXTRA MATERIALS. A complete set of seals, O-rings, and gaskets, and one spare set of mechanical seals shall be furnished for each type and size of pump provided.

Extra materials shall be packaged with labels indicating the contents of each package. Each label shall indicate the manufacturer's name, equipment designation, part nomenclature, part number, address of nearest distributor, and current list price. Extra materials shall be delivered to Owner as directed.

Extra materials subject to deterioration such as ferrous metal and electrical components shall be properly protected by lubricants or desiccants and encapsulated in hermetically sealed plastic wrapping.

PART 2 - PRODUCTS

2-1. SERVICE CONDITIONS. Unless otherwise indicated, sump pumps shall be suitable for pumping clear water with minimal solids of 1/2 inch diameter or less. The maximum pumped liquid temperature shall be 85°F.

2-2. PERFORMANCE AND DESIGN REQUIREMENTS. Pumping units shall be designed for the operating conditions and requirements as follows:

Pump tag numbers.	PSP-003	
Capacity.	30	gpm
Total Head.	20	Ft
Maximum speed.	1750	rpm
Motor horsepower	1/3	Hp
Power Supply	120 V, 60 Hz / single phase	
Discharge Pipe Size	1.25	In
Sump Levels		
Pump off	-10.4	Ft
Pump on	-8.7	Ft

Pump performance shall be stable and free from cavitation and noise throughout the specified operating head range at minimum suction submergences. Minimum pump hydrostatic test pressure shall be 1.5 times the pump shutoff head. Each pumping unit shall be designed so that reverse rotation at rated head will not cause damage to any component.

2-3. MATERIALS.

Stator Housing and Pump Casing	Cast iron, ASTM A48.
Impeller	
Medium Duty Sump Pumps	Bronze or Cast Iron
Shaft	Stainless steel, AISI Type 316.
All Wetted Assembly Fasteners	Stainless steel.
Mechanical Seals	
Medium Duty Pumps	Single type, with ceramic and carbon

	seal faces.
Pedestal Base	Cast iron.
Epoxy Coating	
Primer & Finish Coat	Carboline "Carboguard 891" or Tnemec "Series N140 Pota-Pox Plus".

2-4. PUMP CONSTRUCTION.

2-4.01. Impeller Casing. The impeller casing shall have well-rounded water passages and smooth interior surfaces free from cracks, porosity, blowholes, or other irregularities. Guiderail mounted pumps shall be provided with a flanged discharge nozzle sufficiently rigid to support the pumping unit under all operating conditions. Pedestal mounted pumps shall be provided with a threaded or compression discharge connection. Pipe threads shall conform to ANSI/ASME B1.20.1, NPT.

2-4.02. Impeller. The impeller shall be a semiopen or enclosed one-piece casting. The interior water passages shall have uniform sections and smooth surfaces and shall be free from cracks and porosity. The impeller shall be dynamically balanced and securely locked to the shaft by means of a key and self-locking bolt or nut.

2-4.03. Seal Chamber. Each heavy duty pumping unit shall be provided with an oil-filled chamber for seal lubrication. The chamber shall contain a moisture sensor and shall be provided with a fill/drain plug.

2-4.04. Sealing of Mating Surfaces. All mating surfaces of major components shall be machined and fitted with O-rings where watertight sealing is required. Sealing shall be accomplished by O-ring contact on four surfaces and O-ring compression in two planes, without reliance on a specific fastener torque or tension to obtain a watertight joint. The use of elliptical O-rings, gaskets, or seals requiring a specific fastener torque value to obtain and maintain compression and watertightness will not be acceptable. The use of secondary sealing compounds, gasket cement, grease, or other devices to obtain watertight joints will not be acceptable.

2-4.05. Guiderail Removal System. Not used.

2-4.06. Lifting Chain. Not used.

2-5. FABRICATION AND MANUFACTURE.

2-5.01. Shop Painting. All iron and steel parts of heavy duty pumping units which will be in contact with pumped liquid or submerged after installation,

including the inside of the casing, the impeller, and the discharge elbow, shall be shop cleaned in accordance with the coating manufacturer's recommendations and painted with an epoxy coating system. The coating shall have a dry film thickness of at least 10 mils and shall consist of a prime (first) coat and one or more finish coats. At least 1 quart of the finish coat material shall be furnished with each pump for field touchup.

2-6. BALANCE. All rotating parts shall be accurately machined and shall be in as nearly perfect rotational balance as practicable. Excessive vibration shall be sufficient cause for rejection of the equipment. The mass of the unit and its distribution shall be such that resonance at normal operating speeds is avoided. In any case, the unfiltered vibration displacement (peak-to-peak), as measured at any point on the machine, shall not exceed 4 mils for pumping units with a nominal rotative speed of 1500 rpm or greater, 5 mils for pumping units with a nominal rotative speed less than 1500 rpm and greater than 900 rpm, or 6 mils for pumping units with a nominal rotative speed of 900 rpm or less.

At any operating speed, the ratio of rotative speed to the critical speed of a unit or its components shall be less than 0.8 or more than 1.3.

2-7. MOTORS.

2-7.01. Motors. Pumps shall be driven by an air-filled, totally submersible electric motor manufactured by the pump manufacturer. Motors shall have a minimum service factor of 1.05. Motor nameplate rating shall exceed the maximum horsepower required by the pump in an operating head range 20 percent above or below the design point. The stator housing shall be an air-filled, watertight casing. Motor insulation shall be moisture resistant, Class F, 155°C. Each motor shall be NEMA Design B for continuous duty at 40°C ambient temperature, and designed for at least 10 starts per hour.

120 volt motors shall be provided with integral auto-reset thermal overload protection.

Motor bearings shall be antifriction, permanently lubricated type. The lower bearing shall be fixed to carry the pump thrust and the upper bearing free to move axially. The bearings shall have a calculated AFBMA L_{10} Life Rating of 40,000 hours when operating at maximum operating head. Maximum shaft runout at the mechanical seals shall not exceed 2 mils at any point in the operating head range.

Each pump shall be equipped with one or more multiconductor cable assemblies for power and control. Each multiconductor assembly containing power cables shall be provided with a separate grounding conductor. Each cable assembly shall bear a permanently embossed code or legend indicating the cable is

suitable for submerged use. Cable sizing shall conform to NEC requirements. With the exception of 120 volt units, all cables shall be of sufficient length to terminate in a junction box or control panel outside the sump as indicated on the Drawings, with 10 feet of slack which will be coiled in the sump. Power and control cables for 120 volt units shall be of sufficient length to reach the power supply receptacle or junction box as indicated on the Drawings with 5 feet of slack. Each cable shall be supported by AISI Series 300 corrosion-resistant stainless steel Kellems or woven grips to prevent damage to the cable insulation. Mounting of cable supports in the sump shall be coordinated by the supplier to prevent damage to the cable.

The cable entry water seal shall include a strain relief and a grommet type seal designed so that a specific fastener torque is not required to ensure a watertight, submersible seal. The cable entry junction box and motor shall be separated by a stator lead sealing gland or a terminal board. The junction box shall isolate the motor interior from moisture gaining access through the top of the stator housing.

The motor and its integral protective controls shall be rated and labeled for use in an exposure classification similar to that of the pump, under both submerged and unsubmerged conditions.

2-8. CONTROLS. Each pumping unit shall be provided with a complete control system as indicated herein. The control system type shall be as indicated herein.

2-8.01. Simplex Piggyback Control. Simplex piggyback control systems shall consist of a weighted ball float assembly with an integral differential switch, control cord, and mounting hardware. The control cord shall be suitable for termination on appropriate terminal blocks. Differential switches shall be single pole and rated for at least 1.0 hp at 120 volts. The control cable shall be suitable for submerged service and shall be rated for at least 15 amps. The mounting hardware shall be suitable for attachment to the pump discharge piping, and shall be constructed of corrosion resistant materials. The float and cable shall be attached such that they remain unobstructed through the extent of their travel. The control system shall automatically energize and de-energize the pumping unit as the sump water level rises and falls, in accordance with the Instrument Device Schedule. Installation of float system shall be coordinated with the pump supplier. The control system shall be Weil "Model 8245."

2-8.02. Medium Duty Simplex Control System. Not used.

2-8.03. Heavy Duty Simplex Control System. Not used.

2-8.04. Medium Duty Duplex Control System. Not used.

2-8.05. Heavy Duty Duplex Control System. Not used.

PART 3 - EXECUTION

3-1. INSTALLATION. Equipment and materials furnished under this section shall be installed in proper operating condition in full conformity with the drawings, specifications, engineering data, instructions, and recommendations of the equipment manufacturer, unless exceptions are noted by Engineer.

Pumping units shall be leveled, plumbed, aligned, and wedged into position to fit connecting piping. Installation procedures shall be as recommended by the pump manufacturer and the Hydraulic Institute Standards. Grouting shall be as specified in the Grouting section.

Special care shall be taken to ensure that piping stresses are not transmitted to the pump connections. After final alignment and bolting, pump connections shall be tested for applied piping stresses by loosening the pump connections. If any movement or opening of the joints is observed, piping shall be adjusted to proper fit.

Control cables shall be supported to avoid tension and damage. Liquid level sensors shall operate freely and shall be adjusted to the levels indicated on the Drawings.

3-2. INSTALLATION CHECK. An installation check by an authorized representative of the manufacturer is not required.

3-3. STARTUP AND TESTING. Startup requirements and field performance testing shall be as indicated in the Startup Requirements section.

End of Section

Section 11910

ENGINE-GENERATOR

PART 1 - GENERAL

1-1. SCOPE. This section covers the furnishing of one (1) diesel fueled engine-driven electric generator unit, designated GEN-001. The engine-generator shall be located outdoors in its own weather proof sound attenuated enclosure as indicated on the drawings.

The engine-generator supplier shall be fully responsible to furnish a complete and coordinated skid mounted package system including engine-generator, generator line circuit breaker, generator controls, exhaust silencer batteries and chargers, sub-base fuel storage tank, Bypass-Isolation Automatic Transfer Switch per requirements referenced in Section 16491emergency shutdown control station, and all accessories required for a complete and operating system.

The engine-generator manufacturer shall coordinate with the supplier of the 600V automatic transfer switch specified in Section 16491 to ensure a fully functional system is provided. All coordination requirements between the automatic transfer switch and the engine-generator shall be provided.

1-2. GENERAL. Equipment furnished under this section shall be assembled in full conformity with drawings, specifications, engineering data, instructions, and recommendations of the equipment manufacturer unless exceptions are noted by Engineer.

1-2.01. General Equipment Stipulations. The General Equipment Stipulations shall apply to all equipment furnished under this section. If requirements in this specification differ from those in the General Equipment Stipulations, the requirements specified herein shall take precedence.
1-2.02. Seismic Design Requirements. Seismic design requirements for products specified herein shall be as indicated in the Meteorological and Seismic Design Criteria section.

1-2.03. Coordination. All equipment specified in this section shall be furnished through a single engine-generator manufacturer who shall be responsible for the design, manufacture, coordination, and proper installation and operation of the entire system.

The engine-generator unit shall be a standard product of the manufacturer and shall be a packaged type unit, fully shop assembled, wired and tested, requiring no field assembly of critical moving parts.

Contractor shall verify that each component of the system is compatible with all other parts of the system; that all piping, materials, and motor sizes are appropriate; and that all devices necessary for a properly functioning system have been provided.

Contractor shall, at his own expense, arrange for and obtain all necessary permits, inspections, and submit to the Owner for their review prior to submitting for approval by the proper authorities in local jurisdiction of such work.

Contractor shall properly coordinate the work between the suppliers of equipment being used with or connected to the engine-generator, to ensure that all required provisions for mounting the accessories are included.

Contractor shall provide field services specified to assist in commission, testing and placing the unit in operation in full conformity with equipment manufacturer's specifications.

1-2.04. Governing Standards. Except where modified or supplemented by these specifications, all equipment and materials shall be designed and constructed in accordance with the latest applicable requirements of the standard specifications and codes of ANSI, ASTM, NEMA, IEEE, EEI, EGSA, HEI, ISO, NFPA, SAE, STI, UL, Florida Building Code, and other such regularly published and accepted standards as well as state and local codes.

1-2.05. Equipment Identification. All equipment, valves, devices, panels, and control equipment denoted by a symbol and an identifying number shall be provided with equipment identification tag or nameplate. Equipment identification shall be as indicated in the Equipment and Valve Identification Section.

1-2.06. Manufacturer's Nameplates. Each major component of equipment shall have the manufacturer's name, address, and catalog number on a nameplate securely affixed in a conspicuous place. The nameplate of a distributing agent only will not be acceptable.

1-2.07. Power Supply. Site power supply provided to the engine-generator will be 240 volt, 60 Hz, single-phase, 30 amp feeder circuit to a panelboard provided by the manufacturer and installed in the engine-generator enclosure for operation of the equipment accessories. Additional requirements for the panelboard are as indicated herein and in the Electrical Section.

The engine (starting and controls) will operate from batteries specified herein. When needed, a control transformer shall be provided within the power panel for control supply.

1-3. SUBMITTALS.

1-3.01. Drawings and Data. Complete assembly and installation drawings, together with detailed specifications and data covering materials, drive unit,

parts, devices and accessories forming a part of the equipment furnished, shall be submitted in accordance with the Submittals Procedures section. The data and specifications for each unit shall include, but shall not be limited to, the following:

- Manufacturer, model, and type:
  - Engine.
  - Alternator.
  - Enclosure.
  - Battery charger and battery.
  - Fuel oil cooler (if required by engine design).
  - Silencer.
  - Sub-base fuel storage tank.
  - Surge Protection.
  - Generator Line Circuit Breaker.
- Engine output horsepower and efficiency curves at rated capacity.
- Fuel consumption at rated capacity.
- Ratings at specified conditions:
  - Engine (net horsepower).
  - Engine-Generator kW at specified power factor.
  - Volts.
  - Amperes.
- Overall dimensions and weight:
  - Length.
  - Width.
  - Height.
  - Net weight.
- Wiring diagrams and schematics, including the engine control panel and accessory Panelboard.
- Generator line circuit breaker data (Elevation plan, weight, bill of material, component data sheets, breaker time-current characteristic curves and seismic certification).
- Alternator insulation class and temperature ratings.
- Alternator winding pitch.
- Conformation or test results showing compliance with specified motor starting and voltage dip requirements.
- Generator line circuit breaker rating.
- Control panel layout, identifying location of all instrumentation being supplied.
- Operation instructions.
- Letter from the engine-generator manufacturer confirming that the unit will provide the specified minimum kW rating at the specified design conditions and time duration, including ambient air temperature rise from all equipment located inside the enclosure.
- Confirmation that the starting batteries provide the specified number of start attempts over the specified time.

Confirmation that the battery charger is sized to recharge the batteries for the specified condition over the specified time.
Maximum output short circuit kvA available.
Exhaust gas emission data, maximum values at loads of 1/2, 3/4, and full:
- Carbon Monoxide (CO), lb/hr
- Nitrogen Oxides (NO_x), lb/hr
- Temperature, °F
- Flow, cfm
- Particulate Matter (PM), lb/hr
- Sulfur Dioxide(SO_2), lb/hr
- Unburned Hydrocarbons (UHCs), lb/hr

Equipment skid drawing including material list.
Confirmation that the exhaust through the exhaust silencer does not exceed the specified maximum pressure loss at the specified power outage capacity of the unit.
Letter from the engine-generator manufacturer confirming that the enclosure is suitable for the wind velocity specified in Specification 01611-2 Meteorological and Seismic Design Criteria and is designed as specified for rain penetration when the unit is operating.
Name, address, and phone number of manufacturer's repair facility.
Name, address, and phone number of who will troubleshoot electrical problems.
Color chart showing available options for the enclosure color. The color of the enclosure shall be as directed by Owner during shop drawing review.
Drawings showing engine-generator inside the enclosure that shows location of all enclosure mounted and engine-generator mounted equipment. Drawings to indicate maintenance access clearances for electrical and mechanical equipment. Drawing to show location of all enclosures bracing and location of doors, sub-base tank fill access door and removable panels.
Identification of all field connections for electrical, control, or other service and associated connection requirements to be performed by the Installation Contractor.
Detailed procedures and instrument calibration reports for all items associated with the shop and field testing activities.

Letter from the engine-generator manufacturer confirming that the unit is in full compliance with Federal EPA, State, and local air emission requirements.

Confirmation that the engine-generator unit, including the enclosure, louvered openings, and exhaust system will limit the noise not to exceed the specified decibel reading at the specified distance from any point from the enclosure when operating at the specified capacity.

Provide recommendation for mounting the engine-generator for the specified seismic parameters.

Anchor Bolts

Confirmation of compliance with the requirements of the Meteorological and Seismic Design Criteria section.

Drawing showing connection locations of grounding system for electrical grounding of engine-generator package.

Electric governor control.

1-3.02. Operation and Maintenance Manuals. Operation and maintenance manuals shall be submitted in accordance with the Submittals Procedures section. The operation and maintenance manuals shall include all required inspection and all integrity testing of the sub-base fuel storage tank as required and as recommended by the manufacturer. The operation and maintenance manuals shall be in addition to any instructions or parts lists packed with or attached to the equipment when delivered.

1-4. DELIVERY, STORAGE, AND HANDLING. Shipping shall be in accordance with the Product Delivery Requirement Section. Handling and storage shall be in accordance with the Product Storage and Handling Requirements Section.

1-5. SPARE PARTS. The following spare parts and accessories shall be furnished in substantial wooden boxes with identifying labels and delivered to the Owner as directed:

Spare Parts	Quantity
Air filters.	2 sets
Oil filters.	4 sets
Fuel filters.	2 sets
V-belts.	1 set
Crankcase Filter Media	1 set

If any of the above spare parts are used during the installation process, they shall be replaced by the manufacturer at no cost to the Owner.

All spare parts shall be provided in waterproof packages suitable for export service, labeled with its description and part numbers. Each item or set of parts expected to be installed at one time shall be in an individual package. The spare parts shall be stored as directed by the Owner.

1-5.01. Spare Keys. Three (3) sets of identical keys for locks on the enclosure and all cabinets shall be provided.

PART 2 - PRODUCTS

2-1. SERVICE CONDITIONS. The engine-generator unit shall be designed to operate under the following service conditions:

Seismic wind and snow design requirements including importance factor.	See Meteorological and Seismic Design Criteria Section	
Ambient air temperature range.	40 to 95	F
Site elevation.	9	ft

The engine-generator unit will be used as a power unit for selected electrical loads for standby operation when the utility power fails.

The engine-generator shall automatically start and connect to the electrical loads when initiated from the automatic transfer switch.

Fuel for the engine-generator unit will be furnished from a sub-base fuel tank.

The engine-generator supplier shall provide the correct amount and grade of crankcase oil, coolant, and other fluids (except fuel) necessary for initial testing and operation.

2-1.01. Engine Mounting. The engine-generator shall be attached to an associated skid suitable for mounting on top of the sub-base fuel storage tank that is anchored to a reinforced concrete base. The skid shall be constructed of heavy duty steel. Designed and built to resist deflection and to maintain alignment during lifting and operation during any range of operation. Mounting holes in the structural skid shall be suitable sized to accommodate thermal expansion of the unit and shall be drilled prior to setting the unit on the concrete pad.

Unless otherwise recommended by the manufacturer, the engine-generator sub-base fuel storage tank package shall be attached to the reinforced concrete base using suitable number of hold down lugs and anchor bolts. Use of clamping devices to secure the sub-base fuel storage tank will not be acceptable. Anchor

bolts may be pre-cast in the reinforced concrete base or holes drilled into the concrete base at the required location and the anchor bolts secured with epoxy resin. Unless otherwise recommended by the manufacturer, the nuts for the anchor bolts shall be hand tighten.

2-1.02. Anchor Bolts. All field assembly bolts, anchor bolts, nuts, and washers shall be stainless steel as specified in the Anchorage in Concrete and Masonry Section. All anchor bolts, nuts, and washers required for installation shall be provided by the supplier.

2-2. PERFORMANCE AND DESIGN REQUIREMENTS. The engine-generator unit shall be designed for the operating conditions and requirements as follows:

Designation	GEN-001	
Generator		
Minimum power rating capacity with accessories, for generator voltage output and service conditions specified herein.	100	kW
Output frequency.	60	Hz
Output voltage.	480	V
Output power factor.	0.8	
Output phase and configuration.	Three phase, 3 wire, solid grounded wye configuration	
Engine		
Fuel supply.	No. 2 ultra-low sulfur diesel	
Maximum speed.	1,800	rpm
Minimum piston displacement.	265	in^3
Black start required.	Yes	
Maximum outside length of the engine-generator including air intake plenums and radiator discharge plenums but not including access platforms or stairs.	18 ft – 6 in	
Maximum outside width of the engine-generator package including air intake plenums but not including access platforms or stairs.	6 ft – 6 in	

The engine-generator shall be designed to be operated during a power outage for a maximum 24 continuous hours and a maximum of 100 hours per year for maintenance and testing.

The unit shall be certified for stationary emergency use in accordance with the New Source Performance Standard Emissions regulations.

Engine-generators submitted with ratings exceeding current published data will not be acceptable.

The entire engine-generator package system shall be electrically grounded with provisions to connect to a grounding system installed by others.

Engine performance, cooling, and all accessories to account for the outside ambient air temperature increase from heat rejected from all equipment located inside the enclosure.

The engine-generator unit furnished shall be of a design that can be accommodated in the space as indicated on the drawings. Maximum outside dimensions of the engine-generator enclosure including any air intake or discharge plenums shall be as specified and as noted on the drawings.

The engine-generator shall meet all local air emission requirements and at a minimum, shall be certified as rated for Standby Emergency use in accordance with the Environmental Protection Agency New Source Performance Standard emission regulations. The unit shall be certified at the factory prior to shipping.

The engine-generator supplier shall coordinate with the local air quality management authority to ensure the equipment all current local air emission requirements. The engine-generator supplier shall guarantee the equipment supplied meets all local air emissions requirements in place at the time of startup. Field testing of actual emissions will be required per Section 3-3 to verify compliance with the emission requirements.

The engine-generator shall at a minimum meet the specified maximum allowable noise emissions specified here in and any local noise emission requirement, whichever is more stringent.

2-2.01. Performance Tables. The engine-generator shall satisfactorily start the following loads in the listed order, while meeting the specified voltage and frequency dip:

Step	Load Description	Load	Maximum Voltage Dip (%)	Maximum Frequency Dip (%)	Comments
1	Pump Motor No. 1	50hp/480V/3ph	20	10	Soft Starter 300% Current Limit
	Misc. 3ph Transformer Loads	10 kVA	20	10	

2-2.01.02. Unloading Requirements. The engine-generator shall satisfactorily unload the loads indicated above in any order one at a time while not exceeding overspeed, frequency deviation, and voltage deviation.

2-3. ACCEPTABLE MANUFACTURERS. The engine-generator shall be a current production model. The engine-generator shall be manufactured by the supplier Caterpillar, Cummins, without exception.
The complete engine-generator package shall be assembled by the engine-generator manufacturer or their representative.

The manufacturer of the engine-generator unit shall have a full-time factory trained technical staff and an equipped twenty-four (24) hour service facility having all personnel and all equipment required to maintain, repair, or overhaul the engine-generator unit and associated equipment.

2-4. ENGINE-GENERATOR UNIT.

2-4.01. Engine. The engine shall be reciprocating 4-stroke cycle compression ignition type and shall be equipped with the following:

Dry type air cleaner with replaceable elements.

2-4.02. Alternator. The engine-generator alternator shall be a 4 pole, revolving field design with temperature compensated solid state voltage regulator, brushless rotating rectifier exciter system, and drip-proof construction with amortisseur windings. The alternator shall be directly connected to the engine flywheel housing, and the rotor shall be driven through a semi-flexible driving flange to ensure permanent alignment.

Frequency regulation shall be isochronous ±0.15 Hz from no load to rated load. Voltage regulation shall be within ±2 percent of rated voltage, steady state, from no load to full load. The momentary voltage drop shall not exceed the specified percent without starter coils dropping out or stalling the engine at any time when applying or starting the specified loads. Recovery to stable operation shall occur within 2 seconds.

The alternator shall have Class F insulation as defined by NEMA MG1-1.65 and temperature rise shall be within NEMA MG1-22.40 definition at rated condition. An alternator winding heater shall be furnished as an integral part of the engine-generator unit. Alternator winding heater shall be powered from the panelboard.. The alternator winding heater control system shall include an interlock with the engine-generator units so that the heaters are de-energized at all times that the generator field is energized. The supplier shall provide all internal alternator winding heater wiring and fused branch circuit protection.

The winding pitch shall be 2/3 pitch.

2-4.02.01. Surge Protection. The engine-generator shall be provided with a voltage surge protection system installed in the generator terminal box that is located inside the enclosure.

The surge protection system shall include a surge capacitor and surge arrestor. All cable required to connect the surge protection system to the generator terminals shall be furnished and installed under this section.

2-4.02.02. Neutral Grounding Resistor. Not used.
2-4.02.03. Generator Line and Generator Component Overcurrent Protection. A generator line circuit breaker rated for the generator output voltage, having the trip rating indicated on the drawings, shall be provided on the output terminals. The line circuit breaker shall be pre-wired to the generator output terminals, and shall be provided within the generator enclosure in outdoor applications or shall be furnished in a skid mounted NEMA 1 enclosure for indoor applications.

Overcurrent protection devices shall be provided as needed by the system design to protect generator rotor and excitation system components.
2-4.03. Fuel System. The engine-generator unit shall be furnished with a complete fuel system including engine-driven fuel pump, double wall sub base fuel storage tank, engine supply and return lines, and all accessories required for proper operation. All items shall be suitable for the specified fuel and located inside the enclosure and serviceable from inside the enclosure. The engine driven fuel pump shall transfer the fuel from the fuel source to the engine-generator.

The fuel system and all fuel piping shall be suitable for the specified fuel and shall meet all NFPA, State, and local requirements.
2-4.03.01 Sub-Base Fuel Tank. The sub-base fuel storage tank shall be a rectangular sub-base type double wall UL 2085 type with dry type solid light insulation between the two steel walls and shall be located below the engine-generator and shall be constructed to permit access to the electrical stub-up area. The primary tank and secondary tank shall meet all EPA, State, and local requirements, be vented, and shall normally be used to store diesel fuel at atmospheric pressure. The primary internal steel tank and the secondary outer

steel tank shall each be of welded construction throughout and each shall be UL 142 listed and labeled.

The sub-base fuel storage tank shall have a two-hour fire rating and provide impact ballistic protection. The insulation material between the two steel walls shall be of the dry type, liquid insulation is not acceptable. The tank shall be UL 2085 listed, and shall meet the requirements of the Uniform Fire Code 7907, and NFPA 30/30A. The tank shall be manufactured to and labeled in accordance with STI standards; no exposed concrete, spalling or cracking with minimum of twenty (20) year warranty.

The sub-base fuel storage main tank shall have a 350-gallon capacity.

The secondary tank shall be closed top, encircle the tank, prevent the containment area from being contaminated, and be sized to contain minimum 110 percent of the tank's capacity. All connections required for field-testing the secondary tank shall be furnished.
The fuel storage tank shall be provided with the following:

Primary tank vent cap.

Secondary tank vent cap.

Primary tank emergency vent.

Secondary tank emergency vent.

Level gauge that is capable of measuring the fuel level without engine running and is viewable from the manual fill connection.

Fill spill containment box.

Automatic shutoff valve on the fill line.

Check valve in the fill line.

Cap for pump out connection.

Fill quick coupling.

2-4.03.02. Fuel Tank Connections. All connections for the sub-base fuel storage tank shall be located inside the enclosure and on top of the tank and shall include the following:

Engine fuel supply.

Engine fuel return.

Primary tank vent.

Secondary tank vent.

Primary tank emergency vent.

Secondary tank emergency vent.

Manual fill with dry type quick fill coupling.

Level gauge with transmitter for remote level indication on the engine control panel and near fill door.

Low level switch.

Leak detection.

Two, 2 inch diameter spare primary tank connections with caps.

Minimum 3 inch diameter spare primary tank connection with blind flange.

Secondary tank testing with cap.

High level switch with externally mounted alarm horn and silence button located near the fill connection.

High-High level switch if required for automatic shutoff of the fuel fill.

2-4.03.03 Fuel Tank Instrumentation. The fuel storage tank shall have instrumentation suitable for the geometric configuration of the tank that includes, but not limited to the following:

Level indication readout on the engine control panel with contacts for transmission of a remote 4-20mA signal for remote level indication. Power, if required, shall be pre-wired and fed from the engine-generator local control panel.

Level switch with electrically isolated dry contacts for remote leak detection of the primary tank and shall be provided with feedback to the engine-generator control panel.

Low level switch with electrically isolated dry contacts for remote low level annunciation on the engine control panel. The Low Fuel alarm shall be set to annunciate when 25 percent or less of the tank's capacity is remaining in the tank above the engine supply connection.

High level switch for annunciating audible alarm at 90 percent capacity in the fuel storage tank. Audible alarm horn with silence button shall be located near the fill connection.

High-High level switch with electrically isolated contacts to shut off an electrically operated valve if used in the full line at 95 percent capacity in the fuel storage tank.

One common, isolated, dry contact to close for any fuel system alarm.

The fuel system controls shall be pre-wired and powered from the panelboard.

2-4.03.04 Fuel Tank Fill Station. Tank fill connection, and level gauge, and overfill alarm shall be accessible at ground level through a lockable access door in the enclosure. A fill spill containment box shall be provided for containment of spillage during tank full or tank pump out.

The fill system including piping, fittings and the automatic shutoff valve, shall be suitable for a pump flow from a fill truck. The fill connection shall include a dry type quick disconnect coupling sized to accommodate the local fuel distributor.

A ground stud for the fuel supply truck shall also be supplied.

Tank fuel fill location shall be as specified in section 2-4.07.01 and as indicated on the drawings.

2-4.03.05 Fuel Tank Overfill Protection System. A comprehensive fuel tank overfill protection system shall be provided as described herein. All devices and components shall be pre-wired from the system control panel with feedback to the engine-generator control panel as indicated.

Set at 90 percent capacity, the High Fuel alarm shall provide an audible alarm near the fill connection to alert the fill operator to prevent overfill of the fuel storage tank. A silence push button shall be provided to silence the alarm horn, automatically resetting when the fuel tank level has dropped below the high level conditions.

The fuel storage tank remote fill line shall include a suitable means for automatic shutoff of the fill line when 95 percent of the tank capacity has been reached. If electric operated valve is used, it shall be AC powered and be interlocked with the High-High level switch. The fill system including piping, fitting, and the automatic shut off valve shall be suitable for a pumped flow from a fill truck.

2-4.03.06 Fuel Tank Vent System. A suitable sized vent connection and vent cover shall be provided for the primary tank and secondary tank vent. Each vent cover shall be installed outside the enclosure. The cover shall have an aluminum body, screen over the outlet, and shall prevent rain from entering the vent line.

Suitable sized emergency vent connections for the primary and secondary tank and emergency vents shall be provided for the fuel storage tank. Each emergency relief vent shall be installed outside the enclosure and shall be designed as required to relieve excessive internal pressure caused by fire exposure.

Each vent line and each emergency relief vent line shall be routed up on the inside of the enclosure and shall terminate just above the enclosure.

2-4.03.07. Fuel Line Flexible Connectors. Stainless steel flexible connectors shall be provided for the diesel fuel supply and return lines and at a minimum shall be located at each connection to the engine, upstream of the combination fuel filter/separator, and in the return line to the sub-base fuel tank. The stainless steel flexible connectors shall be U.S. Hose “Model 401M” or equal.

2-4.03.08 Fuel Filter. A combination fuel filter/separator shall be located inside the enclosure and installed on the fuel supply line between the sub-base fuel storage tank and the engine driven fuel pump, upstream from the flexible connectors. The combination fuel filter/separator shall be a manifold unit with shutoff valves and shall permit servicing the filter/separator without engine shutdown. This shall permit valving off the filter/separator and bypassing the fuel to the other filter/separator. Filter separator shall be manufactured by Racor or equal.

2-4.03.09 Fuel Coolers. Fuel oil coolers shall be provided if the engine fuel system absorbs heat from the unit injectors and surrounding jacket water. The fuel cooler shall be a radiator mounted, air cooled that uses the air flow from the radiator for cooling air flow. To prevent overheating of the fuel in the sub-base fuel storage tank, the fuel oil cooler shall be adequately sized to cool the return fuel from the engine to the required fuel inlet temperature.

2-4.04. Exhaust System. The engine-generator unit shall be furnished with a complete exhaust system including an exhaust silencer, all stainless steel exhaust piping, stainless steel bellows expansion joints, and accessories required for a complete operating system.

Exhaust piping shall be Schedule 10S, AISI Type 316L stainless steel with buttwelded fittings.

The silencer shall be all welded AISI Type 316L stainless steel construction. The exhaust silencer shall be furnished with suitable stainless steel bracket supports for horizontal mounting inside the enclosure. The silencer shall be sized so that the back pressure at rated capacity of the engine does not exceed one half the manufacturer's maximum allowable back pressure. The exhaust from the engine shall enter either the bottom or side of the silencer. Silencer shall be Maxim, Nelson or equal.
A silencer shall be provided to meet the overall engine-generator unit noise emissions requirements specified in Section 2-4.14.

The exhaust silencer, if located inside the enclosure, and all exhaust piping inside the enclosure shall be thermally and acoustically insulated with removable insulation.

The exhaust shall discharge vertically at the silencer outlet. A rain cap shall be provided to prevent rain from entering the exhaust pipe. The rain cap shall open from exhaust pressure from the engine and shall close when exhaust flow stops. The cap shall be stainless steel counter-balancing with vertical discharge.

Exhaust emission test ports shall be provided in the exhaust piping after the silencer. Ports shall be threaded and shall be provided with stainless steel threaded plugs or caps.

2-4.05. Starting System and Control Power. The engine-generator unit shall be furnished with a complete electric motor start system including starting motors, battery pack with rack, cables, and battery charger.
The batteries shall be of the high rate, nickel-cadmium type and have a 24 volt output. The batteries shall be electrically sized for the engine furnished for the specified design conditions or electrically sized for the engine furnished using electric strip heaters to maintain minimum cell voltages of 0.65 volt per cell during initial starting, and 0.85 volt per cell throughout the cranking time for five consecutive starting attempts of 10 seconds each. Battery voltages shall be maintained under the conditions specified herein.

The battery charger shall be suitable for the nickel-cadmium battery pack. The charger shall have a DC output suitable to supply power for all continuous loads and to recharge the batteries from a fully discharged state to normal operating voltage within 8 hours. The battery charger shall be provided with a NEMA 2 corrosion resistant enclosure. The battery charger shall be provided with the following: on/off switch, DC ammeter, DC voltmeter, AC input and DC output circuit breakers or fuses, floating voltage equalization, equalizing timer, and relays with form c contacts for remote annunciation of loss of AC power, low battery voltage, and high battery voltage.

The batteries, battery rack, and battery charger shall be located inside the engine-generator enclosure and shall be accessible from outside the enclosure with the enclosure doors open to allow change out of the batteries. The battery rack frame shall be constructed of corrosion resistant material.

The engine-generator shall automatically supply power to the remote bus that powers the battery charger when it is operating and when utility power is not available.

If electric strip heaters are used due to the design conditions they shall be thermostatically controlled and shall be sized to maintain the batteries at 50°F with a winter ambient temperature as specified herein. The strip heaters shall be powered from the panelboard specified herein and shall be wired by the engine-generator supplier.
2-4.06. Cooling System. The engine-generator unit shall be cooled with unit-mounted radiator cooling system complete with radiator, expansion tank, water

pump, belt-driven fan, fan guard, thermostatic temperature control, high-water temperature cutout, electric jacket water heater (if required due to the design conditions) and all accessories required for proper operation. The radiator shall be sized with sufficient capacity for cooling of the engine and all other accessories required for proper operation including the ambient air temperature rise inside the enclosure. The core shall be epoxy coated for ocean spray and the fan shall draw air over the engine and discharge through the radiator.

The electric jacket water heater shall be furnished to maintain jacket water at 90ºF with a winter ambient temperature as specified herein. The jacket water heater shall be thermostatically controlled.

The jacket water heater shall be powered from the panelboard supplied in this section and shall be wired by the engine-generator supplier.

The cooling system shall be filled with a permanent antifreeze mixture of the ethylene glycol type with rust inhibitor.

2-4.07. Engine-Generator Enclosure. The engine-generator unit, including 600V generator line circuit breaker, control panel, battery rack, battery charger, panelboard, sub-base fuel storage tank, and other ancillary equipment, shall be housed in a weatherproof and sound attenuated enclosure. The enclosure shall be shop mounted on the engine generator skid or field erected by the Supplier. The enclosure shall be designed to withstand the specified conditions as defined in the Meteorological and Seismic Design Criteria Section. The enclosure shall meet the Local Building Code Requirements for hurricane protection.

The enclosure shall be as manufactured by Pritchard-Brown or equal.

2-4.07.01. Enclosure Fabrication. The enclosure shall consist of two side walls, two end walls, and roof. The roof shall be braced as necessary to support the exhaust system. All bracing and reinforcing members shall be integral to the enclosure.

Roof penetrations for the installation of the silencer shall be gasketed to prevent the entrance of rain.

Unless otherwise required to meet local building codes, the enclosure shall be constructed of either steel or aluminum. Steel enclosures shall be constructed with a support frame of not less than 14 gage steel and roof panels of minimum 16 gage. Aluminum enclosures shall be formed sheet aluminum construction, made of modular panels and louvers. Post, rails, channels, and roof bows shall be 6061-T6 extruded aluminum. The panels shall be minimum 0.04 inch thick aluminum.

Access service platforms with stairs along each long side shall be provided if the sub-base fuel storage tank height exceeds twenty-four inches. Platforms walking area shall be same height as floor of enclosure.

Access platforms and stairs shall be aluminum construction. The access platforms shall be four feet wide and shall be located on each side of the enclosure with individual stairs to each platform. Suitable brackets shall be welded to the enclosure at the factory for field-bolting the access platforms or stairs onto the brackets on the enclosure. Stairs and handrails shall not prevent the enclosure doors from opening fully.

The service platforms or stairs shall be OSHA compliant and shall be provided by the engine-generator manufacturer.

The enclosure shall be rain proof type as defined by UL2200 and shall prevent the wetting of live parts when the unit is operating. If required to meet the rain penetration requirements, “rain resistant” louvers, vertical air turning plenums or a combination of the two shall be provided.

The enclosure walls shall be reinforced to support the plenums. Plenums shall utilize bracing as required to prevent vibration and damage from the specified wind velocity.

A minimum of four separate doors, two per side, shall be provided and located for easy maintenance access to the engine-generator, controls, and accessories. Doors shall be lockable with stainless hardware. Maximum width of each individual door shall not exceed three feet.

The entire enclosure, except for the louvered opening, shall be provided with noise suppression insulation.

The enclosure shall be provided to meet the overall engine-generator unit noise emission requirements as specified in Section 2-4.14. Field sound level tests shall be performed on the unit as specified in Section 3-3.02.

The sub-base fuel storage tank fill connection locations shall be accessible through its own access door from the operating level of the structure located on the southwest side of the enclosure as indicated on the drawings.

If required, access door shall be provided in front of the panelboard, control panel, and panelboard to permit access and working space from outside the enclosure when the door is open.

Engine oil and coolant drains shall be piped to the outside of the enclosure with lockable shutoff valves and caps.

All enclosure penetrations shall be gasketed or sealed to prevent the entry of rodents.

The enclosure shall be cleaned and painted as specified herein.

2-4.07.02. Enclosure Ventilation. The enclosure shall be provided with intake and exhaust louvers with dampers to open on engine start. Louvers and dampers shall be sized for the cooling air requirements. Louvers shall be AC powered closed and spring open on unit start. The louvers shall be screened from the inside to prevent the entry of birds. The louvers shall be pre-wired to the panelboard specified in this section.

The enclosure shall be provided with vertical air turning plenums for cooling air intake. The air inlet turning plenum shall be located on the end of the enclosure opposite the radiator discharge.

The enclosure shall be provided with vertical air tuning plenums for radiator discharge air. The radiator discharge plenum shall direct the air and mechanical noise upwards away from the unit, and shall be supplied with a bottom sump area, with a one 1-inch drain and shutoff valve to remove any moisture.

2-4.07.03 Electrical. The engine-generator enclosure shall be provided with interior AC/DC operated maintenance lights, controlled with a 1-hour, wind-up timer switch shall also be provided. A duplex receptacle rated 20 amps, 125 volts AC with a weatherproof enclosure shall be mounted inside and near the middle of the enclosure.

The enclosure shall be pre-wired, requiring only external connection to the panelboard.

2-4.08. Crankcase Vent Blow-By Absorber. Suitable crankcase breather system shall be provided by the engine-generator manufacturer to remove oil mist from the crankcase emission prior to induction into the air intake system. The system provided shall meet the applicable level mission requirements.

2-4.09. Control Panel. The engine-generator unit shall be provided with a unit mounted control panel that shall be accessible when the enclosure doors are open. The panel shall be provided with vibration isolators to prevent damage to the instruments from engine-generator vibration.

Adequate clearance shall be provided between the panel, engine and alternator to allow engine maintenance with removing the control panel.
The control panel shall be automatic and safety type and shall, at a minimum, include all items required by NFPA 110, Level 1, and in addition the following devices:

Tachometer.

Non-resettable hour meter.

AC voltmeter, AC ammeter, voltmeter/ammeter selector switch with "off" position.

Two normally open dry contacts which close when the engine is running and open when it is stopped.

Dry contact that closes for remote common alarm.

Dry contact that closes when the control selector switch is in "Auto" mode.

Three-position selector switch with "RUN-OFF-AUTO".

Indicating lights with common alarm for the following:

Sub-base tank low fuel level.

Sub-base tank leak detection.

Sub-base tank continuous reading level.

Dry contact for common fuel alarm.

Contacts for a remote two-position maintain contact emergency shutdown switch.

The control panel shall be provided with a three-position selector switch with the following positions: "RUN-OFF-AUTO". In the "RUN" position, the engine starting sequence shall be initiated providing local control for maintenance, in the "AUTO" position, the engine-generator will be remotely started and stopped by a run contact from the remote startingsignal located in the Bypass-Isolation Automatic Transfer Switch. Isolated contacts for when the unit is in the "OFF" position shall be provided for remote indication.

2-4.09.01 Emergency Shutdown Control Station. A remotely located emergency shutdown control station shall be furnished under this section and connected to the engine-generator control panel. The control station when activated shall shutdown the engine-generator regardless of the position of the "RUN-OFF-AUTO" selector switch. The control station shall be located as indicated on the drawings. Control wiring between the control station and the engine-generator control panel shall be furnished by the installing contractor.

2-4.10. Electric Governor Control. The governor control shall be electronic and shall have the capability for speed control and load sharing (kW and kVAR). The equipment shall consist of, but not limited to, the following:

Governor actuator.

Magnetic pickup for speed sensing.

Monitoring of voltage and current for the generator 3 phase output.

Load sensor.

Speed sensor.

Ramp generator for control of ramp time and idle speed.

Speed control rheostat.

Control power voltage regulation.

Switch for selecting either isochronous or droop control mode.

Controls for the following:

- Rated speed.
- Stability.
- Gain.
- Ramp time.
- Low idle speed.
- Load gain.
- Droop.
- De-droop.

Rheostat for control of speed for synchronizing.

The electronic governor control shall be furnished as a complete governor and control package. All items except the governor actuator and magnetic pickup for speed sensing shall be mounted in the generator enclosure. The electronic package for speed control shall be Woodward 2301A load sharing and speed controls or equal.

2-4.11. Auxiliary Power Panelboard. The engine-generator unit shall include a 120/240 VAC panelboard with a 2P-100 amp rated main circuit breaker and branch circuit breakers that will power the required loads inside the enclosure as specified herein. A minimum of 4 spaces for future breakers shall be provided. The panelboard shall be fed from the mini power center as shown on the Drawings. The panelboard shall be mounted inside the enclosure and isolated from generator vibration. The panelboard shall be pre-wired to all engine generator accessories as needed. The panelboard shall supply power to the following:

Engine-generator starting system battery charger.

Enclosure lights and receptacles.

Fuel system.

Enclosure intake and exhaust louvers/dampers.

Alternator winding heater.

Battery strip heater for starting batteries if required.

The panelboard shall have an integral surge protection device as specified in the Electrical section. All electrical equipment and materials shall meet the applicable requirements of the Electrical section.

2-4.12. Limiting Dimensions. The engine-generator unit furnished shall be of a design that can be accommodated in the space available as specified herein.

2-4.13. Noise Emissions. The engine-generator unit, including the enclosure, louvered openings, and exhaust system, shall be designed to limit the noise emissions to not exceed the A-weighted sound pressure level of 75 dB(A) or any local code requirement, whichever is more stringent, at 23 feet from any point of the engine-generator unit when operating at the specified capacity, and when measured in accordance with industry standards such as but not limited to ANSI S12.18, ASME PTC 36, ISO 8528-10.

2-5. SHOP PAINTING.

2-5.01. Engine-Generator. All steel and iron surfaces shall be protected by suitable coatings applied in the shop. Surfaces which will be inaccessible after assembly shall be protected for the life of the equipment. Coatings shall be suitable for the environment where the equipment is installed. Exposed surfaces shall be finished, thoroughly cleaned, and filled as necessary to provide a smooth, uniform base for painting. Electric motors, engine, alternator, enclosure, piping, and valves shall be shop primed and finish painted prior to shipment to the site.

Stainless steel, nonferrous, and nonmetallic surfaces shall not be painted.

2-5.02. Enclosure. The enclosure shall be thoroughly cleaned after assembly, etched, and shop painted, both interior and exterior surfaces. Painting shall provide protection for salt spray. The enclosure shall be painted according to the manufacturer's standard practices with the interior receiving at least one coat ANSI gray and the exterior powder coated with UV inhibitor. Paint colors shall be as selected by the Owner.

2-6. SHOP TESTING. The manufacturer shall shop test the engine-generator set with its control panel and unit mounted radiator to demonstrate that the equipment conforms to specified requirements for load capacity at the specified frequency, voltage, phase, and power factor.

All items included on the control panel shall be assembled, wired, and tested in the manufacturer's shop.

At a minimum, the tests shall consist of repeated starts and stops, operation under a load bank at specified capacity, frequency, voltage, phase, and power factor for a minimum of 1 continuous hour, and tests to demonstrate that each safety shutdown device is working properly.

Contractor shall submit certified copies of the shop test results and receive approval from the Engineer prior to shipping the unit.

2-7. OPERATION INSTRUCTION. Step-by-step instructions shall be furnished by the engine manufacturer for the unit. The instructions shall include, but not be limited to, the following procedures or information:

Startup of the unit.

Normal shutdown of the unit.

Emergency shutdown of the unit.

Normal operation of the unit, typical temperatures, pressures, speed, etc., for gauges and instruments which are displayed on the panel.

The operation instructions shall be submitted for review in accordance with the Submittals Procedures section. When the review is complete, the instruction sheets shall be printed on heavy paper or cardboard stock and laminated with clear plastic. Two copies of the laminated instructions shall be furnished with the unit. One copy shall be located or displayed at the control panel for the unit. The reserve copy shall be delivered to Owner. The instructions specified here are in addition to the operation and maintenance manuals required by the Submittals Procedures section.

2-8. AIR EMISSION PERMITS. Contractor shall be responsible for preparing and submitting air emissions permit applications on behalf of the Owner to the local air quality authority for the unit being supplied based on the maximum number of operating hours and the guaranteed emissions. Applications shall be submitted to the Owner for their review prior to submitting for approval by the proper authorities.

PART 3 - EXECUTION

3-1. INSTALLATION. The engine-generator shall be installed in accordance with the Equipment Installation section and as specified herein.

The exposed finish shall be inspected after completing system installation, including pipe connections, fittings, valves, and specialties. Burrs, dirt, and

construction debris shall be removed and any damaged finishes, including chips, scratches, and abrasions shall be repaired.

3-2. FIELD QUALITY CONTROL.

3-2.01. Installation Check. An experienced, competent, and authorized representative of the manufacturer shall visit the site of the Work and inspect, check, adjust if necessary, and approve the equipment installation. The representative shall be present when the equipment is placed in operation in accordance with the Commissioning section, and shall revisit the job site as often as necessary until all trouble is corrected and the equipment installation and operation are satisfactory in the opinion of Engineer.

The manufacturer's representative shall furnish a written report certifying that the equipment has been properly installed and lubricated; is in accurate alignment; is free from any undue stress imposed by connecting piping or anchor bolts; and has been operated under full load conditions and that it operated satisfactorily.

The manufacturer’s representative shall furnish a written report certifying that equipment has been properly installed and lubricated; is in accurate alignment; is free from any undue stress imposed connecting piping or anchor bolts and has been operated under full load conditions and that it operated satisfactorily.
All costs for these services shall be included in the Contract Price.

3-3. FIELD TESTING.

3-3.01. Performance Test. The unit shall be mechanically checked for proper operation. Each alarm and safety shutdown shall be checked by artificially simulating an alarm condition. Defective equipment and controls disclosed by the tests shall be replaced or corrected, and the packages placed in satisfactory operating condition.

The engine-generator set shall be tested to demonstrate that the equipment conforms to specified requirements for load capacity, and starting duty.

The complete system (engine, generator, fuel system, exhaust system, starting system and control panel) shall be field tested together by the manufacturer as a complete system to assure compatibility.

The tests shall consist of repeated starts and stops, operation using a load bank at the specified power rating and power factor for the duration indicated below.

Before each of the following tests, the engine shall be brought to steady state conditions as determined by the instrument readings:

- Four (4) continuous hours at the specified power rating and power factor within normal operating conditions of the unit without any alarm conditions.
- Four (4) starts of the specified electrical loads in the order listed followed by 30 minutes of continuous operation per start all within normal operating conditions of the unit without any alarm conditions.
- Demonstration that each safety shutdown device is working properly.

Contractor shall furnish the lubricants, load bank, and the fuel for the tests.

At the option of the Owner, an independent laboratory will be provided by the Owner for the exhaust gas sampling and analysis during the 4-hour load test of the engine. The laboratory analysis will be used for verification the unit meets the guaranteed emissions.

Any retesting or modifications to the equipment to meet the above requirements and emission guarantees shall be approved by the Engineer. All costs of modifications and retesting, including the independent laboratory for air emission testing, shall be at no cost to the Owner.

The following items shall be measured, recorded at 15-minute intervals, and submitted in a field test report:

Outdoor ambient temperature.

kW output.

Engine speed, rpm.

Engine jacket water temperature.

Engine oil pressure.

Start time.

Completion time.

Test reports shall verify that the specified tests have been performed and shall state results. Test results shall be submitted as required in the Submittals Procedures section.

3-3.02. Field Sound Level Test. At the option of the Owner, the installed equipment shall be tested for noise during the 30 minute performance tests. The measured engine-generator sound levels shall not exceed the sound level specified herein.

Compliance with the noise emissions requirement shall be determined in accordance with industry standards including ASME PTC-36. Compliance shall

be based on not exceeding the allowable sound level including background sound level correction per section 4-2.6 ASME PTC-36 and excluding any correction for measurement uncertainties.

Any retesting or modifications to the equipment or enclosure to meet the above requirements shall be approved by the Engineer. All costs of modifications and retesting shall be at no cost to the Owner.

Test reports shall verify that the specified tests have been performed and shall state results. Test results shall be submitted as required in the Submittals Procedures section.

3-4. COMMISSIONING, TRAINING, AND CLOSEOUT. Contractor shall provide complete startup, commissioning and testing services as defined in the Commissioning Section and as outlined in the Equipment Schedule. Contractor shall provide classroom and hands-on training for the equipment and related systems as defined in the Demonstration and Training Section and as outlined in the Equipment Schedule. All startup, commissioning, testing, and training activities shall be defined and coordinated with the Owner and Engineer as outlined in the Commissioning Section and the Demonstration and Training Section. All work shall to the conditions of the Construction Sequencing Section.

Training shall consist of at least two sessions, 4 hour each, for up to 8 people per session.

All costs for these services shall be included in the Contract Price.

3-5. INITIAL TANK FILL. Upon satisfactory completion of all work, the Supplier shall fill the sub-base tank with the specified fuel.

End of Section

Section 13500

INSTRUMENTATION AND CONTROL SYSTEM

PART 1 – GENERAL

1-1. SCOPE. This section covers the furnishing and installation of an instrumentation and control system designated as the Stormwater 07 Pump Station System.

The Contrator or their sub-contractor is responsible for all installation, panel fabrication and supply of instruments outside of the sole-sourced System Supplier's scope described below.

The installation of Stormwater 07 Pump Station System shall include local and remote monitoring and control of the new wetwell constant-speed submersible pumps and associated instrumentation. Integration of the pump station system shall utilize a remote telemetry unit (RTU) that shall retransmit necessary signals via a Data Flow Systems (DTS) radio system to the existing Key West Richard A. Heyman Environmental Protection Facility. The System Supplier shall provide necessary modifications to the existing remote facility human machine interface (HMI) to accommodate the new pump station and all necessary commands and status indications.

The System Supplier shall furnish the RTU and associated equipment specified herein and shall be responsible for all RTU and SCADA programming. The System Supplier shall provide and test the radio, antenna, and associated equipment for a fully functional radio system. The System Supplier shall align the antenna and verify signal integrity through testing to establish a communication link and transmit RTU data to the Environmental Protection Facility.

The Stormwater 07 Pump Station System shall be furnished as specified, complete with all software, human machine interface (HMI) hardware, input/output hardware, instrumentation, and all devices, accessories, appurtenances, testing, and training necessary for proper operation.

1-1.02. Associated Sections. This section also includes the equipment and services specified in the following sections.

Section 13531	REMOTE TERMINAL UNITS
Section 13540	MULTIPLE ADDRESS RADIO EQUIPMENT
Section 13550	SOFTWARE CONTROL BLOCK DESCRIPTIONS
Section 13561	PANEL MOUNTED INSTRUMENTS

Section 13563	PRESSURE AND LEVEL INSTRUMENTS
Section 13564	PROCESS ANALYTICAL INSTRUMENTS
Section 13566	MISCELLANEOUS INSTRUMENTS
Section 13570	PANELS, CONSOLES, AND APPURENANCES
Section 16050	ELECTRICAL

1-2. GENERAL. Equipment furnished and installed under this section shall be fabricated, assembled, erected, and placed in proper operating condition in full conformity with the Drawings, Specifications, engineering data, instructions, and recommendations of the equipment manufacturer, unless exceptions are noted by Engineer.

1-2.01. General Equipment Stipulations. The General Equipment Stipulations shall apply to all equipment and materials furnished under this section. If requirements in this specification differ from those in the General Equipment Stipulations, the requirements specified herein shall take precedence.

1-2.02. Drawings. The Drawings indicate locations and arrangements of equipment and may include installation details and block and one-line diagrams showing connections and interfaces with other equipment. The input/output (I/O) lists are attached as an appendix to the Remote Terminal Units section (section 13531) and .

Principal components of the instrumentation systems shall be as indicated on the P&ID drawings and .

1-2.03. Codes, Permits and Agency Approvals. All work performed and all materials used shall be in accordance with the National Electrical Code, and with applicable local regulations and ordinances. Where mandated by codes, panels, assemblies, materials, and equipment shall be listed by Underwriters' Laboratories. Contractor shall, as part of their work, arrange for and obtain all necessary permits, inspections, and approvals by the authorities having local jurisdiction of such work. This shall include any third-party inspections and testing of panels and equipment.

1-2.04. Supplier's Qualifications. Equipment and software furnished under this section and under other related sections listed in the Scope paragraph above shall be designed, coordinated, and supplied by a single manufacturer or supplier, hereinafter referred to as the System Supplier. The System Supplier shall be regularly engaged in the business of supplying computer-based monitoring, control, and data acquisition systems. The Contractor shall utilize the services of the System Supplier to coordinate all control system related items, to check-out and calibrate instruments, and to perform all testing, training, and startup activities specified to be provided. The Contractor shall select the Owner's pre-approved System Suppliers:

- Data Flow Systems Inc. (DFS) 605 N. John Rodes Blvd., Melbourne, FL 32934, Phone (321) 259-5009

1-2.05. Coordination. Systems supplied under this section shall be designed and coordinated by System Supplier for proper operation with related equipment and materials furnished by other suppliers under other sections of these specifications, under other contracts, and, where applicable, with related existing equipment. All equipment shall be designed and installed in full conformity with the Drawings, specifications, engineering data, instructions, and recommendations of the manufacturer, and the manufacturer of the related equipment.

1-2.06. Related Equipment and Materials. Related equipment and materials may include, but will not be limited to, instrumentation, motor controllers, valve actuators, chemical feeders, analytical measuring devices, conduit, cable, and piping as described in other sections or furnished under other contracts.

1-2.07. Device Tag Numbering System. All devices shall be provided with permanent identification tags. The tag numbers shall agree with System Supplier's equipment drawings and shall be as close as practical to the tag numbers used on the Drawings and device schedules. All field-mounted transmitters and devices shall have stamped stainless steel identification tags. Panel, subpanel, and rack-mounted devices shall have laminated phenolic identification tags securely fastened to the device. Hand-lettered or tape labels will not be acceptable.

1-3. GENERAL REQUIREMENTS. The drawings and specifications indicate the extent and general arrangement of the systems. If any departures from the Drawings or Specifications are deemed necessary by System Supplier, details of such departures and the reasons shall be submitted to Engineer for review with or before the first stage submittal. No departures shall be made without prior written acceptance.

The specifications describe the minimum requirements for hardware and software. Where System Supplier's standard configuration includes additional items of equipment or software features not specifically described herein, such equipment or features shall be furnished as a part of the system and shall be warranted as specified herein.

1-3.01. Governing Standards. Equipment furnished under this section shall be designed, constructed, and tested in accordance with IEEE 519, ANSI C37.90, FCC Part 15 - Class A, and NEMA ICS-1-109.60.

1-3.02. Dimensional Restrictions. Layout dimensions will vary between manufacturers and the layout area indicated on the Drawings is based on typical

values. The System Supplier shall review the Drawings, the manufacturer's layout drawings and installation requirements, and make any modifications requisite for proper installation subject to acceptance by Engineer. At least three feet of clear access space shall be provided in front of all instrumentation and control system components.

1-3.03. Workmanship and Materials. System Supplier shall guarantee all equipment against faulty or inadequate design, improper assembly or erection, defective workmanship or materials, and leakage, breakage, or other failure. Materials shall be suitable for service conditions.

All equipment shall be designed, fabricated, and assembled in accordance with recognized and acceptable engineering and shop practice. Individual parts shall be manufactured to standard sizes and thicknesses so that repair parts, furnished at any time, can be installed in the field. Like parts of duplicate units shall be interchangeable. Equipment shall not have been in service at any time prior to delivery, except for testing.

1-3.04. Corrosive Fluids. All parts which are exposed to corrosive conditions shall be made from corrosion resistant materials. System Supplier shall submit certification that the instrument manufacturer approves the selection of materials of primary elements that are in contact with the specified process fluid to be inert to the effects of the process fluid.

1-3.05. Appurtenances. Signal converters, signal boosters, amplifiers, special power supplies, special cable, special grounding, and isolation devices shall be furnished as needed for proper performance of the equipment.

1-3.06. Programming Devices. A programming or system-configuring device shall be provided for systems that contain any equipment that requires such a device for routine calibration, maintenance, and troubleshooting. The programming device shall be complete, newly purchased for this project, and shall be in like-new condition when turned over to Owner at completion of startup.

1-4. SUBMITTALS. Complete dimensional, assembly, and installation drawings, wiring and schematic diagrams; and details, specifications, and data covering the materials used and the parts, devices and accessories forming a part of the system furnished, shall be submitted in accordance with the submittals section. Submittal data shall be grouped and submitted in three separate stages. The submittal for each stage shall be substantially complete. Individual drawings and data sheets submitted at random intervals will not be accepted for review. Equipment tag numbers or identifications used on the Drawings shall be referenced where applicable.

1-4.01. First Stage Submittal. The first stage submittal shall include the following items.

a. A detailed list of any exceptions, functional differences, or discrepancies between the system proposed by System Supplier and this specification.

b. Product catalog cut sheets on all hardware and software items, clearly marked to show the model number, optional features, and intended service of each device.

c. A brief, concise description of the proposed system, including major hardware and software components and personnel training.

d. A block diagram or schematic drawing showing the principal items of equipment furnished, including model numbers, and their interrelationships.

e. Drawings showing floor and wall space or desktop area requirements for all equipment items, including allowances for door swings and maintenance access.

f. Environmental and power requirements, including heat release information for each equipment item.

g. Standard field termination drawings for all process input/output equipment, showing typical terminations for each type of point available in the system.

h. A copy of the proposed software licenses for all software associated with the system.

i, Outline for training classes.

j. Additional Requirements identified in other Division 13 sections.

1-4.02. Second Stage Submittal. Before any equipment is released for shipment to the site and before factory testing is scheduled, the following data shall be submitted.

At System Supplier's option, the first and second stage submittals may be combined.

a. Detailed functional descriptions of all software modules specified and furnished as part of System Supplier's standard system. The descriptions shall be identified with the applicable specification paragraph.

b. Complete panel fabrication drawings and details of panel wiring, piping, and painting. Panel and subpanel drawings shall be to scale and shall include overall dimensions, metal thickness, door swing, mounting details, weight, and front of panel arrangement to show general appearance, with spacing and mounting height of instruments

and control devices.

c. Wiring and installation drawings for all interconnecting wiring between components of the system and between related equipment and the equipment furnished under this section. Wiring diagrams shall show complete circuits and indicate all connections. If panel terminal designations, inter-device connections, device features and options, or other features are modified during the fabrication or factory testing, revised drawings shall be submitted before shipment of the equipment to the site.

d. Review of drawings submitted prior to the final determination of related equipment shall not relieve System Supplier from supplying systems in full compliance with the specific requirements of the related equipment.

e. Input/output listings showing point names, numbers, and addresses. Input/output identification numbers from the contract documents shall be cross-referenced in this submittal.

f. Proposed lesson plans or outlines for all training courses specified herein, including schedule, instructors' qualifications and experience, and recommended prerequisites.

g. Standard system engineering and user manuals describing the use of the system and application programming techniques for creating reports, graphics, database, historical records, and adding new process I/O nodes to the system.

h. Additional Requirements identified in other Division 13 sections.

1-4.03. Third Stage Submittal. Complete system documentation, in the form of Operation and Maintenance Manuals, shall be submitted before the commencement of field acceptance testing. Operation and Maintenance Manuals shall include complete instruction books for each item of equipment and software furnished. Where instruction booklets cover more than one specific model or range of device, product data sheets shall be included which indicate the device model number and other special features. A complete set of "as-built" wiring, fabrication, and interconnection drawings shall be included with the manuals. If field-wiring modifications are made after these drawings are submitted, the affected drawings shall be revised and resubmitted. Additional requirements are identified in other Division 13 specification sections.

1-5. PREPARATION FOR SHIPMENT. All electronic equipment and instruments shall be suitably packaged to facilitate handling and to protect against damage during transit and storage. All equipment shall be boxed, crated, or otherwise completely enclosed and protected during shipment, handling, and storage. All equipment shall be protected from exposure to the elements, shall be kept dry at all times, and shall not be exposed to adverse ambient conditions.

Painted surfaces shall be protected against impact, abrasion, discoloration, and other damage. Painted surfaces that are damaged prior to acceptance of equipment shall be repainted to the satisfaction of Engineer.

Each shipment shall include an appropriate shipping list that indicates the contents of the package, including the specific instrument tags. The shipping list shall be accessible without exposing the instruments to the atmosphere. The shipping list shall also contain any cautionary notes regarding storage of the instruments, including requirements to protect the instrument from static discharge, desensitizing chemicals (solvents, paints, etc.), or ambient atmospheric conditions.

Individual instruments shall be appropriately tagged or labeled to positively identify the device. All identification shall be visible without the need to unpack the instrument from its protective packaging.

Instrument shipment and storage requirements shall be coordinated with Engineer or Owner prior to shipment. System Supplier shall provide adequate storage and be ready to accept the shipment before shipping any equipment to the site. Additional shipping and storage requirements shall be as detailed in the individual instrument specifications.

Components which are shipped loose due to transportation limitations shall be assembled and disassembled by the manufacturer prior to shipment to assure that all components fit together and are adequately supported.

1-6. DELIVERY, STORAGE, AND SHIPPING. Shipping shall be in accordance with the Product Delivery Requirements section. Handling and storage shall be in accordance with the Product Storage and Handling Requirements section.

1-7. SPARE PARTS. Spare parts and consumable items are specified in other sections.

1-7.01. Packaging. All spare parts shall be delivered to Owner before final acceptance of the system. Packaging of spare parts shall provide protection against dust and moisture and shall be suitable for storage. Circuit boards and other electronic parts shall be enclosed in anti-static material. All packages shall be clearly marked with the manufacturer's name, part number or other identification, date of manufacture, and approximate shelf life.

1-7.02. Replacement. System Supplier may utilize spare parts and supplies during system installation, de-bugging, startup, or training, but shall restore all such materials and supplies to the specified quantities before final acceptance of the systems.

PART 2 - PRODUCTS

2-1. GENERAL REQUIREMENTS. All equipment furnished under each section referenced in SCOPE is a part of this section and shall be selected by System Supplier for its superior quality and intended performance. Equipment and materials used shall be subject to review.

2-1.01. Standard Products. The systems furnished shall be standard products. Where two or more units of the same type of equipment are supplied, they shall be the products of the same manufacturer; however, all components of the systems furnished hereunder need not be the products of one manufacturer unless specified herein.

To the extent possible, instruments used for similar types of functions and services shall be of the same brand and model line. Similar components of different instruments shall be the products of the same manufacturer to facilitate maintenance and stocking of repair parts. Whenever possible, identical units shall be furnished.

2-2. PERFORMANCE AND DESIGN REQUIREMENTS. The design of the systems furnished hereunder shall utilize concepts, techniques and features that provide maximum reliability and ease of maintenance and repair. The systems shall include board-level devices such as light emitting diodes or other indicators to facilitate quick diagnosis and repair. Diagnostic software shall be furnished to facilitate system-level troubleshooting.

Where redundant hardware is provided, the system shall be capable of performing all specified functions, without reconfiguring hardware or software, with only one device of each category in service.

2-2.01. Factory Assembly. Equipment shall be shipped completely factory assembled, except where its physical size, arrangement, configuration, or shipping and handling limitations make the shipment of completely assembled units impracticable.

2-3. POWER SUPPLY AND INSTRUMENT SIGNAL. As indicated on the Drawings, incoming power supply shall be 480 volts, 60 Hz, three phase. Power supply to all control system equipment will be 120 volts, 60 Hz, single phase. System Supplier shall be responsible for distribution of power among enclosures, consoles, peripherals, and other components of the system from the power supply receptacles and junction boxes indicated on the Drawings. Power distribution hardware shall include cables, surge protection devices, power metering, receptacles, and branch circuit overcurrent protection installed in accordance with the Electrical section.

Unless otherwise indicated, power supply to the instrumentation will be unregulated 120 volts ac. Unless otherwise indicated, all transmitted electronic analog instrument signals shall be 4-20 mA dc and shall be linear with the measured variable.

2-3.01. Facility Distribution System. Equipment not indicated to be powered from an uninterruptible power source shall be suitable for being supplied from the facility distribution system and shall be capable of withstanding voltage variations of ±10 percent and harmonics up to the limits of IEEE 519 without affecting operation. System Supplier shall provide voltage conditioning or filtering equipment if necessary to meet the requirements specified.

2-3.02. Power Supplies. Power supplies for voltages other than those listed above shall be an integral part of the equipment furnished. Internal power supplies shall be regulated, current limiting, and self-protected.

2-3.03. Surge Withstand. All equipment shall meet all surge withstand capability tests as defined in ANSI C37.90 without damage to the equipment.

2-3.04. Uninterruptible Power Supply. Not used.

2-4. SERVICE CONDITIONS AND ENVIRONMENTAL REQUIREMENTS. The equipment provided for the instrumentation and control system shall be suitable for the service conditions specified in the attached equipment sections.

All equipment shall be designed and selected to operate without degradation in performance throughout the environmental extremes specified. Equipment shall be designed to prevent the generation of electromagnetic and radio frequency interference and shall be in compliance with FCC Rules and Regulations, Part 15, for Class A computing devices.

2-4.01. Ambient Temperature and Elevation. All system equipment located in air conditioned rooms shall be suitable for operation in ambient temperatures from 10°C to 35°C and a relative humidity of 10 to 80 percent, noncondensing. All equipment located in non air conditioned indoor areas shall be suitable for an ambient temperature range of 0°C to 50°C and a relative humidity of 10 to 95 percent, noncondensing. All equipment located outdoors shall be suitable for operation in an ambient temperature range -20°C to 60°C and a relative humidity of 5 to 100 percent. Heaters and air conditioning/cooling equipment shall be provided where essential to maintain equipment within its manufacturer-recommended operating ranges.

All equipment and instruments shall be designed to operate at the site elevation of 0 ft.

2-4.02. Deleterious Effects. All system equipment will be installed in areas without anti-static floor construction and without any provisions for control of particulates or corrosive gases other than ordinary office-type HVAC filtering. System Supplier shall furnish any additional air cleaning equipment, anti-static chair pads, or other protective measures necessary for proper operation of the system.

All input/output hardware shall meet or exceed, without false operation, all requirements of NEMA ICS-1-109.60, Electrical Noise Tests.

2-4.03. Noise Level. The equivalent "A" weighted sound level for any system equipment located in the control room, except printers, shall not exceed 35 dBA. The sound level for printers shall not exceed 65 dBA. Sound reduction enclosures shall be provided where necessary to comply with these limits.

2-4.04. Lightning Protection. In addition to other environmental protection specified herein, the entire system shall be provided with lightning protection. Lightning protection measures shall include the following.

2-4.04.01. Grounding. All major components of the system shall have a low resistance ground connection. Grounding system provisions indicated on the Drawings shall be modified as recommended by System Supplier.

2-4.04.02. Surge Suppressors. Surge and lightning suppressors shall be non-faulting, non-interrupting, and shall protect against line-to-line and line-to-ground surges. Devices shall be solid-state metal oxide varistor (MOV) or silicon junction type, with a response time of less than 50 nanoseconds. Surge protective devices shall be applied for the following:

a. All 120 VAC power connections to RTUs and instruments. Surge arresters shall be Transtector "ACP-100-HW Series", Power Integrity Corporation “ZTA Series”, Phoenix Contact “Mains PlugTrab”, or MCG Surge Protection “400 Series”.
b. All analog signal circuits where any part of the circuit is outside of the building envelope. Circuits shall be protected at both the transmitter and the control system end of the circuit. Surge protection devices shall not impede or interfere with the use of smart transmitter calibration/communication. Protection devices located near the transmitter shall be Telematic “TP48.” Protection devices in control panels shall be Transtector “PDS Series or FSP Series”, Telematic “SD Series”, Phoenix Contact “PipeTrab Series”, or Citel “BP1-24.”
c. All radio antenna leads. Surge protection devices shall be as specified in Multiple Address Radio Equipment section.

2-5. SOFTWARE DOCUMENTATION. System Supplier shall furnish complete documentation on all software supplied with the systems specified herein. Operating systems, compilers, assemblers, and utility and diagnostic programs that are standard commercial products of third parties need not be included in the optical media backup. Software documentation shall consist of the following principal items.

a. One backup set of any integrated circuit or solid-state memory-based plug-in firmware used.
b. Two complete back-up copies of system and application software in executable format on optical media compatible with the system furnished.
c. Three sets of user reference manuals for all standard system and application software.
d. One set of user reference manuals for all operating system software.
e. Three sets of printed as-built reference documentation for any special software provided specifically for this contract.
f. For each licensed software product, all documentation provided by the product manufacturer shall be provided. This includes all reference manuals and any other documents that were provided by the manufacturer. One set of this documentation shall be supplied for each and every piece of equipment provided. Multiple pieces of similar equipment or software require multiple copies of this documentation.

2-6. SOFTWARE LICENSE. All software programs supplied as a standard part of System Supplier's products for this project shall be licensed to Owner for use on the system specified herein. Such license shall not restrict Owner from using the software on the system provided hereunder or its replacement. Owner shall have the right to make copies of the software for use on the system provided. Specific requirements of System Supplier's software license are subject to review and approval by Owner and Engineer.

2-7. INSTALLATION TEST EQUIPMENT. All necessary testing equipment for calibration and checking of system components shall be provided by System Supplier. System Supplier shall also furnish calibration and maintenance records for all testing and calibration equipment used on the site if requested by Engineer.

2-8. PROGRAMMING DEVICES. The following programming devices shall be provided for the instruments specified in other sections:

Instruments Requiring Programming Devices	Quantity of Programming Devices

Analytical instruments 1

PART 3 – EXECUTION

3-1. INSTALLATION REQUIREMENTS. The installation of equipment furnished hereunder shall be by the Contractor or their assigned subcontractors.

3-1.01. Field Wiring. Field wiring materials and installation shall be in accordance with the electrical section.

3-1.02. Instrument Installation. Instruments shall be mounted so that they can be easily read and serviced and so that all appurtenant devices can be easily operated. Installation details for some instruments are indicated on the Drawings.

All outdoor instrumentation shall be protected from direct sun exposure. Instruments shall be placed in locations to limit south and west sun exposure. Sunshades shall be provided on instruments that are subject to the direct sun exposure. Sunshades shall be located so the opening faces north or east where possible. Sunshades shall be provided as shown on the Drawings.

3-1.03. Salvage of Existing Equipment. Existing equipment and materials removed or replaced under this contract shall be delivered to Owner at a location designated by Owner, or shall be properly disposed of at Owner's discretion. Care shall be taken to avoid damage to equipment delivered to Owner.

Any mounting brackets, enclosures, stilling wells, piping, conduits, wiring, or openings that remain after removal of equipment and support hardware shall be removed or repaired in a manner acceptable to Owner and Engineer. Transmitters or switches containing mercury shall be removed and disposed of by personnel trained in the handling of hazardous materials and using approved procedures.

3-2. SYSTEM SOFTWARE CONFIGURATION. System software shall be configured by the System Supplier. Configuration services shall consist of the creation of the system database, report formats, operator interface graphic and tabular display screen formats, password and security implementation, and programming of control units to provide a fully functioning system. The System Supplier shall fully configure the system using data provided herein or supplied by the Engineer and/or the Owner after award of the contract.

The system that is delivered to the field for installation, checkout, and startup shall have all files, or databases, that are configurable in size, sized in a manner in which there will be 50% space available for future work after the completion of

this project. This sizing should include the addition of memory modules, disk drives, or any other device to insure the 50% spare space availability. All "tuning" of software that is dependent on space requirements shall be done prior to the completion of this project.

Tuning of software programs shall be accomplished in such a manner that the program operates at its highest performance level. These programs include, but are not limited to Microsoft SQL Server, all PLC ladder logic, and others.

3-2.01. Control System Database. The control system database shall be developed and configured by the System Supplier. The System Supplier shall enter information obtainable from the Contract Documents into the database prior to soliciting input from the Engineer and the Owner. The System Supplier shall determine the need for any "pseudo" database points and shall ascertain and enter all information needed to define these points. The System Supplier is responsible for entering all information associated with each point. This includes but is not limited to, descriptions, engineering units, associated displays, areas, security, etc. All fields associated with each database point must be completely filled out accurately.

3-2.02. Graphic Screen Displays. The System Supplier shall be responsible for developing and configuring the custom graphic displays. Each piece of major process equipment that is monitored by the control system shall be displayed on one or more graphic screen. Graphic screens shall be representations of the equipment and piping. The screens must accurately show all devices and equipment that is part of the control loops. These items must be done in accordance to the Configuration Standards and Conventions as described later in this section. Alarm and/or event displays shall also be provided and proven functional prior to acceptance of the system. A means of capturing and printing of all graphic screens shall also be included. The software program provided must be capable of printing the screen in a black and white (using gray scale) or color format. This program must be accessible from all terminals provided under this contract. The black and white printing shall be done in a manner in which the use of the black background is not represented in the printout. This is done to keep the utilization of ink cartridge and toner cartridge to a minimum.

All graphic screens shall be animated to indicate the current state of the piece of equipment. The following graphic screens shall be provided, as a minimum.

- Update Alarm Summary
- Update Event Summary
- Overview of the Pump Station process area (with vectoring to sub-areas)

A minimum of 4 custom graphic displays shall be provided by the System Supplier.

3-2.03. Report Formats. Report formats shall be developed and programmed by the System Supplier using tag names defined in the database creation. Reports shall be provided as summarized below. All reports will be provided with a header on each page to indicate the contents of each column of information. Each page shall be numbered and indicate the name of the report, the date the report was printed, and the time of the printout. The printout shall also include the time span of the information shown on the report.

- Daily Operating Report. A daily report, listing the major plant variables (up to 4 variables) shall be provided. The report shall include hourly values and minimum/maximum/average values where appropriate. A minimum of 1 separate daily reports shall be provided by the System Supplier.
- Monthly Operating Report. A monthly operating report, which averages the values from the above daily reports, shall be provided. The report shall include monthly minimum/maximum/average values where appropriate.

3-2.04. Configuration Standards and Conventions. A "Software Configuration Standards and Conventions" document shall be prepared and submitted by the System Supplier. The document shall be submitted for review and approval before software configuration commences. The document shall describe and define such items as proposed graphic display process line colors/representations; symbology; color standards for "on", "off", "opened", "closed", and "alarm" conditions; alarm handling conventions; how items will be selected for control; methods for navigation between displays; address usage/naming conventions; and security setup. Before submitting the initial draft document, the System Supplier shall meet with the Engineer and/or Owner to review any of the Owner's existing standards and conventions. All copies of this submittal shall be provided in color to insure the accuracy of each item. No black and white copies will be accepted. The colors used in the printed submittal shall accurately depict the colors and shapes proposed for use on the final system.

In addition to submitting the document for review, an updated version of the document shall be submitted as part of the O&M Manuals. The document shall be revised to document any additional standards that are established throughout the configuration process.

3-2.05. Configuration Review Meetings. Proposed graphic screens and report formats shall be reviewed with the Owner and Engineer throughout the configuration process. The System Supplier's programming personnel shall attend all meetings. A second review meeting shall be held at approximately 50 percent completion. Both meetings shall be held at the Owner's facilities.

3-2.06. Software Functional Requirements. General functional requirements for system configuration are indicated on the Drawings and described in the

specifications. The information presented herein and indicated on the Drawings illustrates the general functional intent of the system, and may not be sufficient to fully configure the system. The System Supplier shall be responsible for determining what additional information may be required to complete the configuration tasks, and for obtaining this information from the Engineer or the Owner.

3-3. SYSTEMS CHECK. System Supplier shall provide the services of a field manager and a trained and experienced field supervisor to assist the installation contractor during installation, and to calibrate, test, and advise others of the procedures for installation, adjustment, and operation.

3-3.01. Field Manager. System Supplier shall appoint a field services manager who shall be responsible for the coordination of all system check-out and startup activities, and who shall be immediately available to Engineer and Owner by phone or on site for the duration of this project.

3-3.02. Field Inspection at Delivery. The field supervisor shall inspect major equipment items within five working days of delivery, to assure that the equipment was not damaged during shipment and shall supervise or assist with unpacking, initial placement, and initial wiring of the system.

3-3.03. Field Calibration of Instruments. After each instrument has been installed, a technical representative of System Supplier shall calibrate each instrument and shall provide a written calibration report for each instrument, indicating the results and final settings. The adjustments of calibrated instruments shall be sealed or marked, insofar as possible, to discourage tampering. Instrument calibration shall be done before checkout of the system operation. A typical instrument calibration report is attached to the end of this section.

3-3.04. Training for Installation Personnel. The field supervisor shall train the installation personnel in reading and understanding submittal drawings, and in the correct installation and wiring procedures for the equipment. One day shall be included for this training.

3-3.05. Field Inspection Prior to Start Up. After installation and wiring connections are complete, the field supervisor, with additional System Supplier's personnel shall verify that each external connection to the system is correctly wired and field process components and devices are functioning as intended. A minimum of 2 working days shall be included for this task, but System Supplier shall be responsible for completing the following scope of work.

3-3.05.01. Analog Signals. Analog input signals shall be simulated at the transmitting source, and verified to be received at the proper register address in the control system. Analog outputs shall be generated at the control system, and verified to be received with the correct polarity, at the respective receiving device.

3-3.05.02. Discrete Signals. Discrete input and output signals shall be simulated and verified that they are received at the respective receiving device, and at the proper voltage.

3-3.05.03. Devices by Other Suppliers. If interrelated devices furnished by other suppliers, under other contracts, or by Owner, such as valve actuators, motor controls, chemical feeders, and instruments, do not perform properly at the time of system checkout, the field supervisor shall use suitable test equipment to introduce simulated signals to and/or measure signals from these devices to locate the sources of trouble or malfunction.
3-3.05.04. System Check Out Report. The System Supplier shall submit a written report on the results of such tests to Engineer. Additional documentation shall be furnished as requested by Engineer to establish responsibility for corrective measures. System Supplier shall verify, in writing, to Engineer or Owner that System Supplier has successfully completed the external connection check before beginning system startup or field acceptance testing.

3-3.06. Start Up Assistance. After the field supervisor has completed the system check and submitted his report, System Supplier shall supply a factory-trained engineer and programmer to provide on-site start up assistance. During the startup period, these personnel shall thoroughly check all equipment, correct any deficiencies, and verify the proper operation of all components. One working days shall be included for this task.

3-4. TESTING. The system shall be acceptance tested at the factory and on site.

System Supplier shall prepare a testing procedure to be approved by Owner and Engineer that shall demonstrate that the system conforms to the specifications. The testing procedure shall be submitted at least 30 days in advance of testing. The testing shall be conducted by System Supplier and witnessed by Owner and/or Engineer.

System Supplier shall notify Engineer and Owner in writing at least 14 days before the proposed testing date. If the factory acceptance test is concluded unsuccessfully, the test shall be repeated. System Supplier shall reimburse Owner and Engineer for all expenses incurred in connection with attending repeated factory or site testing necessitated by system failure or inadequate preparation.

3-4.01. Factory Acceptance Testing. After system assembly and debugging at System Supplier's facility, the system shall be tested before the system is shipped to the site. The factory test shall be conducted on

The Stormwater 07 Pump Station Control Panel, HMI , including all peripherals and associated software, shall be factory tested under simulated operating conditions. Both normal operating sequences and fault conditions shall be simulated. The results shall be noted in the HMI alarm/event log. The testing procedures for hardware and software are described below.

All basic functions shall be demonstrated, including I/O processing, communications, alarm handling, HMI display functions, alarm logging, report generation, and historical data storage, as well as the specific functions listed herein. The system shall operate continuously for at least a 72 hours without faults. This operational test may run concurrently with the demonstration of hardware and software functions. The test procedure shall also include at a least four-hour period for discretionary tests to be conducted by Engineer or Owner.

For systems with software configuration by Engineer/Owner, a preliminary version of such configured software may be used as part of the factory acceptance test.

3-4.01.01. Hardware Test. Processors, processor modules, and peripheral devices associated with the system shall be assembled together as they will be installed in the field and shall be tested. The test shall demonstrate proper operation of each hardware device and communications among devices, and shall include verification of selected analog and discrete inputs and outputs.

3-4.01.02. Software Test. All system software modules specified herein shall be demonstrated. Software tests shall include running all diagnostics, debugging routines, and system test routines. The operating system, advanced process control language compiler, and all associated drivers shall be fully tested and operable for the system test. Software "patches" or changes to bypass failed or flawed modules during the test will not be acceptable.

3-4.02. Site Acceptance Testing. After installation and checkout by System Supplier’s personnel, the system shall be subjected to an acceptance test.

Site acceptance testing shall be scheduled after receipt of the System Check Out Report and System Supplier shall verify that all field signal changes are reflected in the proper address locations in the system database.

The site acceptance testing shall follow the same procedure as the factory testing and shall operate without loss of basic functions. The number of working days of continuous operation for the test shall be five. The operational demonstration shall confirm that the status, alarm, and process variable signals are valid and are being updated appropriately, and that the discrete and analog output signals from the control system are being correctly transmitted and implemented. Any errors or abnormal occurrences shall be recorded by System Supplier’s field representative. System Supplier’s field representative need not

be continuously present during the site acceptance testing, but shall be available to respond to the site within one hour of notification. The representative shall inspect the system for faults at least once every 24 hours and shall log or record any noted problems. The log shall include a description of the problem, its apparent cause, and any corrective action taken.

3-4.02.01. Failure of Redundant Equipment. Failure of redundant equipment shall not be considered downtime provided that automatic failover occurs as specified and, in the opinion of Engineer, the failure was not caused by deficiency in design or installation. In the event of repeated failure of any hardware component or software module, the acceptance test shall be terminated and re-started.

3-4.02.02. Completion of Test. Successful completion of the site acceptance test, including the operational demonstration, is prerequisite to Substantial Completion as specified in the Supplementary Conditions.

3-5. TRAINING. System Supplier shall conduct training courses for personnel selected by Owner. Training shall be provided in the following categories: instrument, control system maintenance, operator (pre-installation), operator (post-installation), programmer (HMI software), programmer (RTU software), networking, and supplemental shall be provided. Training shall be conducted by experienced instructors who are familiar with the specific system supplied.

3-5.01. General Training Requirements. In general, System Supplier's standard training courses may be used to meet the training objectives specified. Where standard courses do not meet these objectives, additional coursework shall be developed. Clock hour requirements for each level of training are shall be as listed. A "clock hour" is defined as one hour of instruction or supervised training exercise. Training hour requirements are the number of hours of training to be provided for each student. Additional training time shall be provided if considered necessary to meet the training objectives.

3-5.01.01. Training Costs. All costs associated with the training program; excluding travel, lodging, and per diem expenses for Owner's and Engineer's personnel to attend off-site training programs; shall be the responsibility of System Supplier and shall be included in the contract price.

3-5.01.02. Lessons. Training lesson plans and other information for the second stage submittal as defined herein shall be submitted at least 30 days prior to the start of training.

3-5.01.03. Video Recording. Not used.

3-5.02. Instrument Training. Training on the calibration, maintenance, troubleshooting, and repair for the instrument devices provided under this project

shall be provided. Training shall also be provided for any hand-held or computer-based calibration devices and their associated software. Four

3-5.03. Control System Maintenance Training. Not used.

3-5.04. Operator Training. Owner's personnel will utilize the system for day-to-day monitoring and/or control of the facilities. The training program shall provide operators with sufficient knowledge to move from screen to screen within the system, understand the contents of group and detailed point displays, react to and acknowledge alarms, adjust control setpoints and alarm limits, configure and print shift reports, print preconfigured reports on demand, control equipment connected to the system, and react to and resolve minor system errors.

3-5.04.01. Classes. Operator training shall include sessions as specified below.

3-5.04.01.01. Pre-installation Session. Not used.

3-5.04.01.02. Post-installation Session. The post-installation training shall include three separate, but identical, sessions for three shifts of personnel and shall be conducted at Owner's facilities. Each class shall consist of 2 hours of instruction using the lesson plan submitted and approved for use. The post-installation sessions may have to be conducted outside normal working hours to accommodate the working schedule of Owner's personnel. The post-installation training sessions shall be conducted for 4 of the Owner's operating personnel.

3-5.04.02. Content of Classes. Each session shall cover at least the following topics.

a. Logging on and off the system and the use of passwords.
b. Access and interpretation of standard displays and diagnostics.
c. Moving from screen to screen within the graphic display environment.
d. Response to and acknowledgment of alarms.
e. Configuration and printing of shift and other reports by schedule or on demand.
f. Control of field equipment and devices connected to the system.
g. Manual entries to database points.
h. Generation of current (real-time) and historical custom and predefined reports and trend displays.
i. Appropriate responses to software and hardware errors.
j. Enabling and disabling individual inputs and outputs.

The operator-training program shall be developed for personnel with no prior experience with the hardware and software provided as part of the project.

3-5.05. Programmer Training (HMI Software). Not used.

3-5.06. Programmer Training (PLC Software). Not used.

3-5.07. Network Training. Not used.

End of Section

INSTRUMENT NAME & SERVICE:		
BRAND & MODEL NO.:		
TAG OR LOOP NO.:		
INPUT/OUTPUT RANGE:		
INPUT	ACTUAL OUTPUT	DESIRED OUTPUT
PROPORTIONAL BAND:		
RESET:		
POSITION OF SWITCHES, JUMPERS, ETC.		
COMMENTS:		
DATE OF CALIBRATION: CALIBRATED BY:		
Black & Veatch	INSTRUMENT CALIBRATION REPORT	Figure 1-13500

Instrument Device Schedule - Legend/Description Sheet

Item. This is an arbitrary sequential number which is for reference only.
Type. This is the ISA (or similar) alpha tag representing the function of the instrument.
Loop Number. This is the loop number associated with the instrument.
Suffix. This is a modifier to the loop number if required.
Tag. This is a five-part tag representing the structure, type, process system, sequential number, and suffix of the I/O point.
Service Description. This is the description of the instrument service (refer to legend sheets).
Device Type & Size. This is the instrument device type and should match the description as listed in the specification. Where appropriate, the size of the device (such as diameter of flowmeters) will be listed.
Output Type. This generally will be '4-20 mA' or "Dry Contact'. It could also be a serial output for smart devices (such as HART or FIELD-BUS) but only if the serial output is the primary I/O interface.
Calibration. This is the calibrated range for analog devices or the trip point(s) for discrete devices.
Power Type. This will typically be either '2-wire' for loop powered devices or '4-wire' for 120 volt powered devices.
Installation Detail. This is a reference to the installation detail on the drawings if applicable.
Installation Detail. This is a reference to the installation detail on the drawings if applicable.
Specification. This column may include a cross reference to another specification section where applicable or to a note which provides additional information. Notes are appended to the end of the device schedule listings.
Remarks. This column includes additional information and notes associated with the instrument.

Item	Type	Loop Number	Tag	Service Description	Device Type	Size	Output Type	Calibration	Power Type	Installation Detail	P&ID Drawing	Specification	Remarks
1	LE	001	LE-001	PUMP STATION WETWELL LEVEL	BUBBLER LEVEL ELEMENT				N/A	I-501-A	I-101	13563	
2	LIT	001	LIT-001	PUMP STATION WETWELL LEVEL	BUBBLER LEVEL TRANSMITTER		4-20mA	EL -12.8 FT to EL -0.8 FT	4-WIRE	I-501-A	I-101	13563	
3	YLF	001	YLF-001	PUMP STATION WETWELL LEVEL BUBBLER FAULT	INDICATING LIGHT				DRY CONTACT		I-101	13561	
4	LSHH	001	LSHH-001	PUMP STATION WETWELL LEVEL HIGH HIGH	FIXED-MOUNT FLOAT TYPE LEVEL SWITCH		DRY CONTACT	EL -3.33 FT	DRY CONTACT	I-501-D	I-101	13563	
5	LSLL	001	LSLL-001	PUMP STATION WETWELL LEVEL LOW LOW	FIXED-MOUNT FLOAT TYPE LEVEL SWITCH		DRY CONTACT	EL -12.6 FT	DRY CONTACT	I-501-D	I-101	13563	
6	AE	002	AE-002	PUMP STATION WETWELL COMBUSTIBLE GAS	GAS DETECTOR SENSOR				N/A	I-501-C	I-101	13564	
7	AIT	002	AIT-002	PUMP STATION WETWELL COMBUSTIBLE GAS	GAS DETECTOR TRANSMITTER		4-20mA	0 - 100% LEL	4-WIRE	I-501-C	I-101	13564	
8	YLF	002A	YLF-002A	PUMP STATION WETWELL COMBUSTIBLE GAS HIGH	INDICATING LIGHT				DRY CONTACT		I-101	13561	
9	YLF	002B	YLF002B	PUMP STATION WETWELL COMBUSTIBLE GAS ANALYZER FAULT	INDICATING LIGHT				DRY CONTACT		I-101	13561	
10	LSHL	003	LSHL-003	PUMP STATION VALVE VAULT LEVEL HIGH/LOW	SIMPLEX PIGGYBACK CONTROL LEVEL SWITCH		DRY CONTACT	ON WITH RISING LEVEL (EL -8.7 FT) OFF WITH FALLING LEVEL (EL - 10.4 FT)	DRY CONTACT		I-101	11185	
11	PI	010	PI-010	PUMP NO. 1 DISCHARGE PRESSURE	FIELD-MOUNT PRESSURE GAUGE	4-1/2"		0 - 15 PSI	N/A	I-501-B	I-101	13563	
12	YLF	010	YLF-010	PUMP NO. 1 FAULT	INDICATING LIGHT				DRY CONTACT		I-101	13561	
13	HS	010	HS-010	PUMP NO. 1 LOCAL-REMOTE	2-POSITION SELECTOR SWITCH		DRY CONTACT		DRY CONTACT		I-101	13561	
14	HS	010	HS-010	PUMP NO. 1 ON-OFF-AUTO	2-POSITION SELECTOR SWITCH		DRY CONTACT		DRY CONTACT		I-101	13561	
15	YLR	010	YLR-010	PUMP NO. 1 RUNNING	INDICATING LIGHT				DRY CONTACT		I-101	13561	
16	KQI	010	KQI-010	PUMP NO. 1 RUNTIME	TOTALIZER			0 - 9,999,999 HRS			I-101	13561	
17	AAX	015	AAX-015	PUMP STATION ALARM HORN	ALARM HORN				DRY CONTACT		I-101	13561	
18	AAL	015	AAL-015	PUMP STATION ALARM LIGHT	INDICATING LIGHT				DRY CONTACT		I-101	13561	
19	KQI	015	KQI-015	PUMP STATION WETWELL PUMPS COMBINED RUNTIME	TOTALIZER			0 - 9,999,999 HRS			I-101	13561	
20	HS	015A	HS-015A	PUMP STATION ALARM SILENCE	PUSH BUTTON		DRY CONTACT		DRY CONTACT		I-101	13561	
21	HS	015B	HS-015B	PUMP STATION ALARM RESET	PUSH BUTTON		DRY CONTACT		DRY CONTACT		I-101	13561	
22	HS	015C	HS-015C	PUMP STATION ALARM LIGHT TOGGLE	2-POSITION SELECTOR SWITCH		DRY CONTACT		DRY CONTACT		I-101	13561	
23	HS	015D	HS-015D	PUMP STATION ALARM HORN TOGGLE	2-POSITION SELECTOR SWITCH		DRY CONTACT		DRY CONTACT		I-101	13561	
24	PI	020	PI-020	PUMP NO. 2 DISCHARGE PRESSURE	FIELD-MOUNT PRESSURE GAUGE	4-1/2"		0 - 15 PSI	N/A	I-501-B	I-101	13563	
25	YLF	020	YLF-020	PUMP NO. 2 FAULT	INDICATING LIGHT				DRY CONTACT		I-101	13561	
26	HS	020	HS-020	PUMP NO. 2 LOCAL-REMOTE	3-POSITION SELECTOR SWITCH		DRY CONTACT		DRY CONTACT		I-101	13561	
27	HS	020	HS-020	PUMP NO. 2 ON-OFF-AUTO	3-POSITION SELECTOR SWITCH		DRY CONTACT		DRY CONTACT		I-101	13561	
28	YLR	020	YLR-020	PUMP NO. 2 RUNNING	INDICATING LIGHT				DRY CONTACT		I-101	13561	
29	KQI	020	KQI-020	PUMP NO. 2 RUNTIME	TOTALIZER			0 - 9,999,999 HRS			I-101	13561	
30	HS			PUMP NO. 1 HAND-OFF-AUTO	3-POSITION SELECTOR SWITCH		DRY CONTACT		DRY CONTACT		I-101		INTEGRAL TO RTU PROVIDED BY SUPPLIER
31	HS			PUMP NO. 2 HAND-OFF-AUTO	3-POSITION SELECTOR SWITCH		DRY CONTACT		DRY CONTACT		I-101		INTEGRAL TO RTU PROVIDED BY SUPPLIER
32	HS			ENGINE GENERATOR EMERGENCY SHUTDOWN	2-POSITION SELECTOR SWITCH		DRY CONTACT		DRY CONTACT		I-102	11910	PROVIDED BY SUPPLIER ACCORDING TO 11910
33	ZS			ENGINE GENERATOR INSTRUSION DETECTED	PROXIMITY (DOOR) SWITCH		DRY CONTACT		DRY CONTACT		I-102	11910	PROVIDED BY SUPPLIER ACCORDING TO 11910
34	YA			ENGINE GENERATOR STORAGE TANK HIGH ALARM HORN	ALARM HORN				DRY CONTACT		I-102	11910	PROVIDED BY SUPPLIER ACCORDING TO 11910
35	LS			ENGINE GENERATOR STORAGE TANK LEAK DETECTED	LEVEL SWITCH		DRY CONTACT		DRY CONTACT		I-102	11910	PROVIDED BY SUPPLIER ACCORDING TO 11910
36	LI			ENGINE GENERATOR STORAGE TANK LEVEL	LEVEL INDICATOR		4-20mA	PER SUPPLIER	PER SUPPLIER		I-102	11910	PROVIDED BY SUPPLIER ACCORDING TO 11910
37	LIT			ENGINE GENERATOR STORAGE TANK LEVEL	LEVEL INDICATING TRANSMITTER		4-20mA	PER SUPPLIER	PER SUPPLIER		I-102	11910	PROVIDED BY SUPPLIER ACCORDING TO 11910
38	LSH			ENGINE GENERATOR STORAGE TANK LEVEL HIGH	LEVEL SWITCH		DRY CONTACT	PER SUPPLIER	DRY CONTACT		I-102	11910	PROVIDED BY SUPPLIER ACCORDING TO 11910
39	LSHH			ENGINE GENERATOR STORAGE TANK LEVEL HIGH HIGH	LEVEL SWITCH		DRY CONTACT	PER SUPPLIER	DRY CONTACT		I-102	11910	PROVIDED BY SUPPLIER ACCORDING TO 11910
40	LSL			ENGINE GENERATOR STORAGE TANK LEVEL LOW	LEVEL SWITCH		DRY CONTACT	PER SUPPLIER	DRY CONTACT		I-102	11910	PROVIDED BY SUPPLIER ACCORDING TO 11910

Section 13531

REMOTE TERMINAL UNITS

PART 1 – GENERAL

1-1. SCOPE. This section covers remote terminal units (RTUs), including associated input/output hardware to control process equipment and serve as the interface to field devices.

1-1.01. Control System. The Instrumentation and Control System section shall apply to all equipment furnished under this section. Additional RTU software requirements are indicated in Software Control Block Descriptions section.

1-2. GENERAL. Equipment furnished and installed under this section shall be fabricated, assembled, erected, and placed in proper operating condition in full conformity with the Drawings, Specifications, engineering data, instructions, and recommendations of the equipment manufacturer, unless exceptions are noted by Engineer.

1-2.01. General Equipment Stipulations. The General Equipment Stipulations shall apply to all equipment and materials furnished under this section. If requirements in this specification differ from those in the General Equipment Stipulations, the requirements specified herein shall take precedence.

1-2.02. Drawings. Supplementing this section, the Drawings indicate the number and types of RTUs, locations of RTUs, and provide diagrams and schematics regarding connection and interaction with other equipment. All hardware, including power supplies, special cables, and other appurtenant equipment, shall be provided to meet the functional requirements described herein and indicated on the Drawings.

1-2.03. I/O List. An input/output (I/O) field device signal listing is included as an appendix attached to this section.

1-3. SUBMITTALS. Submittals shall be as specified in the Instrumentation and Control System section.

1-4. DELIVERY, STORAGE, AND SHIPPING. Delivery, storage and shipping shall be as specified in the Instrumentation and Control System Section.

1-5. SPARE PARTS. Spare parts shall be furnished as follows:

Spare Part	Quantity

I/O modules	1 of each type used

PART 2 - PRODUCTS

2-1. GENERAL. All equipment furnished under this section shall be expressly selected by System Supplier for its superior quality for the intended purpose and shall comply with the following requirements.

2-1.01. Interchangeability. All remote terminal unit systems shall be products of the same manufacturer and of the same series or product line. Local and remote input/output hardware shall be interchangeable among all I/O panels and systems. Modules and hardware by other manufacturers will be acceptable only if the RTU manufacturer does not offer suitable modules and hardware for the same functions.

2-1.02. Acceptable Manufacturers. The RTU shall be Data Flow Systems TAC Pack TCU with Radio, without exception.

2-1.03. Signal Power Supplies. Regulated dc power supplies shall be provided in each RTU enclosure for analog inputs, digital outputs, and digital inputs. Power supplies shall be suitable for an input voltage variation of ±10 percent, and the supply output shall be fused or protected against short-circuiting. Output voltage regulation shall be as required by the instrumentation equipment supplied under another section.

The loop power supply shall be separate from the power supply circuit for the processor.

The power source for all digital inputs from field devices shall be separately fused for each digital input module. Unless otherwise noted, all field devices will be provided with dry contacts that close to provide an input to the RTU.

2-1.04. Appurtenances. The RTU processor and I/O hardware shall be provided as complete systems, as shown on the control system block diagram drawings. The RTU shall include all necessary hardware and software for a complete working system. All special rack or panel mounted power supplies, special interconnecting and programming cables, special grounding hardware, or isolation devices shall be furnished for proper operation of the equipment. Signal converters, signal boosters, amplifiers, special power supplies, special cable, special grounding, intrinsically safe relays and current repeaters, surge suppression devices, and isolation devices shall be furnished and installed for proper operation of the equipment.

2-1.05. RTU Arrangement. The RTU shall be distributed and arranged as

indicated on the Drawings.

2-1.06. Service Conditions. RTUs will be installed outdoors where the ambient temperature range is 5-40 °C. PLCs shall be furnished with heated enclosures.

2-2. LARGE RTU PROCESSOR. Not used.

2-3. MINI RTU PROCESSOR. The RTU shall be a Data Flow Systems TAC Pack TCU with Radio. The remote terminal unit processor shall be an industrial type that utilizes battery-backed CMOS type or non-volatile type memory. Battery-backed memory shall include integral batteries with sufficient capacity for at least 6 months' memory retention without power to the processing unit. Standby and shelf life of the batteries shall be at least 5 years.

2-3.01. Diagnostics. The unit shall utilize self-monitoring diagnostic techniques. Easily visible LEDs shall indicate device status as well as memory and input/output error conditions. The unit shall monitor radio current and unit temperature. Fault codes shall be stored in internal memory and shall also be available through the programming device to facilitate troubleshooting.

2-3.02. Programming Port. The processor shall include a programming port that is available for programming and configuration after the system is fully functional.

2-3.03. Communications. The RTU shall be programmed to operate autonomously, regardless of communications status with other units. Each RTU shall be capable of communicating with local and remote input/output hardware, local HMIs, and external SCADA systems.

2-3.04. Environment. The processor shall be suitable for operation in the environments specified in another section.

2-3.05. Programming. The RTU shall feature a built-in pump controller configurable for multiple pump applications. The controller shall provide pump control based on an analog signal or a series of discrete signals. Additionally, the RTU shall be programmable in order to deviate from the built-in pump controller logic and provide additional logic for custom applications. The programmable RTU shall include the following functions and features:

Contacts, coils, branching.

Data comparisons.

On-delay and off-delay timers.

Counters with comparators.

Floating Point Math and Logical instructions.

Master control relay.

Standard and user-defined data tables for digital and analog value storage.

2-3.06. Capabilities. The processor shall include the following capabilities for programming, debug of programs, and troubleshooting.

Off-line programming.

Input/output forcing.

2-3.07. Configuration. Each remote terminal unit shall include integral communications ports for the programming device, remote input/output, HMI device, or remote communications interfaces as required.

Remote terminal unit systems shall support the following types of input/output:

120 volt ac digital input and output.

12/24 volt dc digital input and output.

4-20 mA dc analog input and output.

2-3.08. Input/Output Hardware. The RTU shall be equipped with integrated input/output terminals.

All input/output hardware shall be entirely contained within the RTU enclosure.

All digital input/output hardware shall include isolation against surges of at least 1500 volts. All output hardware connected to inductive loads shall be supplied with surge suppression devices as required and recommended by the RTU manufacturer to prevent damage to output hardware. Combination input/output modules will be acceptable if they meet all of the requirements in the following subparagraphs.

2-3.08.01. Wiring Terminals. All input/output modules shall utilize easily removable plug-in or hinged field wiring terminals to allow removal of modules without disconnecting individual wires.

2-3.08.02. I/O Circuit Power Supply. Outputs for motor driven equipment will typically be powered from the driven equipment. Digital outputs for miscellaneous equipment shall be powered either from the controlled equipment or the RTU enclosure as indicated on the Drawings or as coordinated with the controlled equipment supplier. Outputs that control process equipment specified under other sections or provided under other contracts shall be fully isolated or shall operate relay-type digital output modules or interposing relays in the RTU

cabinet.

2-3.08.03. Integral Digital Inputs. Digital inputs shall sense voltages between 20 and 28 volts dc. Each input module shall be suitable for being connected to a separate voltage source and return. Return voltage may be common to the entire input module.

2-3.08.04. Integral Digital Outputs. Digital outputs shall control voltages from 100 and 130 volts ac and shall be rated at least 1 ampere. Outputs shall be individually fused and shall have LED indicators to display output status. Each digital output shall be provided with an interposing relay. Outputs shall withstand a surge of at least 80 amperes for one cycle and shall have an off-state leakage current not to exceed 2.0 mA.

2-3.08.05. Integral Relay Digital Outputs. Where indicated on the RTU input/output listing, digital outputs shall control voltages from 24 to 110 volts dc and 24 to 230 volts ac and shall be rated at least 1 ampere. Outputs shall be individually fused and shall have LED indicators to display output status. Digital outputs for motor driven equipment shall be powered by the driven equipment. Outputs shall withstand a surge of at least 80 amperes for 15 milliseconds.

2-3.08.06. Integral Analog Inputs. Analog inputs shall accept linear 4-20 mA dc signals from field transmitters. Input circuitry shall be floating differential type designed to prevent loop grounding. Analog to digital conversion accuracy shall be at least 12 bit (0-4095 count) resolution. Where analog input signals are grounded outside of the RTU enclosure, isolation shall be provided for the associated analog input point either on the analog input module or through an I/I signal isolator provided in the RTU enclosure.

2-3.08.07. Integral Analog Outputs. Not used.

2-3.08.08. Remote Input/Output Modules. Additional input/output hardware shall be supplied in standard modules of 32 points each for assembly in local and remote input/output enclosures. Modules shall be compatible with the RTU.

Digital inputs shall sense voltages between 10 and 15 volts dc. Each digital input shall be provided with an interposing relay. Each input module shall be suitable for being connected to a separate voltage source and return. Return voltage may be common to the entire input module.

Digital outputs shall drive 12 volt dc relays that will operate control voltages. Relay outputs shall be individually fused. Relay outputs shall be rated for 5 amperes continuous at 120 volts ac.

Analog outputs shall accept linear 4-20 mA dc signals from field transmitters.

Remote Input/Output Modules shall be DFS RIO032, without exception.

2-3.08.09. Panel Terminations. All RTU input/output signals for field connections shall be terminated through panel enclosure terminal strips. Direct connection of field wiring to the I/O module terminals is not acceptable.

2-4. COMMUNICATIONS. Each remote terminal unit system shall be furnished complete with communication hardware modules for local input/output hardware, remote input/output hardware, or for host computers.

Communication hardware shall be compatible with the cable, data highway, fiber optic, or radio communication media.

2-4.01. Addressability. Each remote terminal unit shall be individually addressable so that only the selected controller responds when queried. Designation of a controller's network address may be either a software or hardware function.

2-4.02. Communications Hardware. System Supplier shall provide all necessary communications hardware. Hardware shall be included for, but not be limited to, remote I/O, data highway, host computer, fiber optics, Ethernet and radio.

2-4.02.01. RTU to RTU Communications Hardware. Not used.

2-4.02.02. RTU to Remote I/O Communications Hardware. The master RTU shall communicate with the remote I/O modules over a remote I/O communications network. System Supplier shall include all rack mounted, enclosure mounted, or desktop mounted communications modules required for a complete working system.

2-4.02.03. RTU to Host Communications Hardware. Each RTU shall communicate to the host computer over a network as shown on the control system block diagram. System Supplier shall include all rack mounted, enclosure mounted, or desktop mounted communications modules required for a complete working system. The computer system hardware is covered in another section.

2-4.03. Communications Media. System Supplier shall provide all necessary cabling for the RTU communications network and RTU remote I/O communications network. Communications cables shall meet the requirements of the manufacturers of the RTU and communications modules. RTU communications media shall be as specified under the Network Systems section.

2-5. MEDIA CONVERTERS. Not Used.

2-6. TELEPHONE NETWORKS. Not used.

2-7. SERIAL NETWORKS. Serial communications network hardware shall be provided for as specified and/or as shown on the Drawings.

2-8. PROGRAMMING DEVICE HARDWARE. System Supplier shall provide two interconnecting cables, each 5 meters long, to connect the computer to the remote terminal unit. The cables shall be shielded data cable and shall be terminated on both ends with the appropriate connectors. Connectors shall be labeled to identify the connected equipment.

2-8.01. Special Devices. System Supplier shall provide two sets of any special devices (such as null modems, adapter cards, interface converters, etc.) required to establish an operational programming line between the remote terminal units and programming device.

2-9. PROGRAMMING SOFTWARE. System Supplier shall furnish one copy of the software utilized for development of the RTU program. If the software utilized is closed-source or proprietary the System Supplier shall furnish one fully licensed copy of the software. The software shall be suitable for running on a laptop computer running Windows 10 operating system software. A full legal set of programming software documentation shall accompany each copy of the software. Each copy of the programming software shall include all necessary device drivers and add-on software packages. After Site Acceptance Testing, the System Supplier shall provide a finalized copy of the completed program to Owner.

2-10. SYSTEM ENCLOSURES. Remote terminal units, input/output hardware, and appurtenances shall be housed in shop-assembled panels as described in the Panels, Consoles, and Appurtenances section.

2-11. OPERATOR INTERFACE TERMINALS. Not Used.

PART 3 - EXECUTION

3-1. INSTALLATION REQUIREMENTS. RTU installation requirements are specified in Instrumentation and Control System section except as described herein.

Field check, testing, and training shall be as specified in the Instrumentation and Control System section.

3-2. CONFIGURATION.

3-2.01. RTU Programming and Configuration. Configuration services are specified in the Instrumentation and Control System section.

3-2.02. Communications Configuration. The communications shall be fully configured and installed by System Supplier. Communications shall be configured as shown on the Drawings.

End of Section

Input/Output List - Legend/Description Sheet

Item. This is an arbitrary sequential number which is for reference only.
Type. This is the ISA (or similar) alpha tag representing the function of the instrument.
Loop Number. This is the loop number associated with the instrument.
Suffix. This is a modifier to the loop number if required.
Tag. This is a five-part tag representing the structure, type, process system, sequential number, and suffix of the I/O point.
IO Type. This is the type of I/O signal, as follows:
AI = Analog Input
AO = Analog Output
DI = Discrete Input
DO = Discrete Output
Description. This is the description of the function.
Field Device. This is the tag number of equipment associated with the I/O point.
Analog Data (Signal Type). This will typically be 4-20mA, but could also be 1-5Vdc, serial, HART, BUS, or similar to indicate the signal type of the associated input or output.
Analog Data (Calibrated Range). This will be the scaled value of the input in engineering units.
Analog Data (Power). This will typically be '2-wire' for devices which are loop powered from the PLC enclosure, or '4-wire' for devices which are powered from external supplies, unless noted otherwise.
Discrete Data (Signal Type). This will be 120VAC, 24VDC, or similar to indicate the signal type of the associate input or output.
Discrete Data (CLOSED State). This will indicate the state of the input or output when it is considered to be closed or energized (normal, alarm, running, failed, etc.).
Discrete Data (Power Source). This will indicate the location of the power source for the wetting voltage on the contacts, as follows:
Field= External field power source. (May require interposing relays or isolated I/O module type.)
RTU = Power originates from within the RTU.
Discrete Data (Interp Relay). This will either be 'Yes' or 'No' to indicate whether the input or output requires an interposing relay. Relays are typically required to isolate external voltage sources. See specification for additional details.
Remarks. This column includes additional information and notes associated with the instrument.
P&ID. This is the drawing number of the P&ID where the device is shown.

							Analog Data			Discrete Data					
Item	Type	Loop Number	Tag	IO Type	Description	Field Device	Signal Type	Calibrated Range	Power	Signal Type	Closed State	Power Source	Interp Relay	Remarks	P&ID
1	LI	001	LI-001	AI	PUMP STATION WETWELL LEVEL	LI-001	4-20mA	EL - 12.8 FT to EL -0.8 FT	4-WIRE						I-101
2	AAH	002	AAH-002	DI	PUMP STATION WETWELL COMBUSTIBLE GAS HIGH	AIT-002				24VDC	NOT IN ALARM	FIELD	NO		I-101
3	JI	015	JI-015	DI	PUMP CONTROL PANEL THREE-PHASE POWER	CP-07				24VDC	POWER INDICATION	FIELD	NOTE 1		I-101
4	LAHH	001	LAHH-001	DI	PUMP STATION WETWELL LEVEL HIGH HIGH	LSHH-001				24VDC	NOT IN ALARM	FIELD	NOTE 1		I-101
5	LALL	001	LALL-001	DI	PUMP STATION WETWELL LEVEL LOW LOW	LSLL-001				24VDC	NOT IN ALARM	FIELD	NOTE 1		I-101
6	UA	010	UA-010	DI	PUMP NO. 1 FAULT	P-010				12VDC	NOT IN FAULT	FIELD	YES		I-101
7	UA	020	UA-020	DI	PUMP NO. 2 FAULT	P-020				12VDC	NOT IN FAULT	FIELD	YES		I-101
8	UA	002	UA-002	DI	PUMP STATION WETWELL COMBUSTIBLE ANALYZER FAULT	AIT-002				24VDC	NOT IN FAULT	FIELD	NO		I-101
9	UA	001	UA-001	DI	PUMP STATION WETWELL LEVEL TRANSMITTER FAULT	LIT-001				24VDC	NOT IN FAULT	FIELD	NOTE 1		I-101
10	YI	015A	YI-015A	DI	PUMP CONTROL PANEL ALARM SILENCE	CP-07				24VDC	SILENCE COMMAND	FIELD	NOTE 1		I-101
11	YI	015B	YI-015B	DI	PUMP CONTROL PANEL RESET	CP-07				24VDC	RESET COMMAND	FIELD	NOTE 1		I-101
12	YI	010B	YI-010B	DI	PUMP NO. 1 IN AUTO	P-010				12VDC	IN AUTO	FIELD	YES		I-101
13	YI	010A	YI-010A	DI	PUMP NO. 1 IN REMOTE	P-010				12VDC	IN REMOTE	FIELD	YES		I-101
14	YI	020B	YI-020B	DI	PUMP NO. 2 IN AUTO	P-020				12VDC	IN AUTO	FIELD	YES		I-101
15	YI	020A	YI-020A	DI	PUMP NO. 2 IN REMOTE	P-020				12VDC	IN REMOTE	FIELD	YES		I-101
16	YIR	010	YIR-010	DI	PUMP NO. 1 RUNNING	P-010				24VDC	RUNNING	FIELD	NOTE 1		I-101
17	YIR	020	YIR-020	DI	PUMP NO. 2 RUNNING	P-020				24VDC	RUNNING	FIELD	NOTE 1		I-101
18	AAL	015	AAL-015	DO	PUMP CONTROL PANEL ALARM LIGHT	CP-07				120VAC/24VDC	NOT IN ALARM	RTU	NO	N.C. RELAY OUTPUT INTEGRAL TO RTU	I-101
19	AAX	015	AAX-015	DO	PUMP CONTROL PANEL ALARM HORN	CP-07				120VAC/24VDC	ALARM	RTU	NO	N.O. RELAY OUTPUT INTEGRAL TO RTU	I-101
20	UCR	010	UCR-010	DO	PUMP NO. 1 RUN COMMAND	P-010				120VAC	RUN COMMAND	RTU	YES		I-101
21	UCR	020	UCR-020	DO	PUMP NO. 2 RUN COMMAND	P-010				120VAC	RUN COMMAND	RTU	YES		I-101
22	LAL	030B	LAL-030B	DI	ENGINE GENERATOR OIL LOW	GEN-001				12VDC	ALARM	FIELD	YES		I-102
23	LAL	030A	LAL-030A	DI	ENGINE GENERATOR FUEL LOW	GEN-001				12VDC	ALARM	FIELD	YES		I-102
24	TAH	030	TAH-030	DI	ENGINE GENERATOR TEMPERATURE HIGH	GEN-001				12VDC	ALARM	FIELD	YES		I-102
25	YA	030C	YA-030C	DI	ENGINE GENERATOR FAIL	GEN-001				12VDC	ALARM	FIELD	YES		I-102
26	YA	030B	YA-030B	DI	ENGINE GENERATOR OVERCRANK	GEN-001				12VDC	ALARM	FIELD	YES		I-102
27	YA	030A	YA-030A	DI	ENGINE GENERATOR OVERSPEED	GEN-001				12VDC	ALARM	FIELD	YES		I-102
28	YI	040B	YI-040B	DI	AUTOMATIC TRANSFER SWITCH ON GENERATOR POWER	ATS-001				12VDC	EMERGENCY SOURCE	FIELD	YES		I-102
29	YI	040A	YI-040A	DI	AUTOMATIC TRANSFER SWITCH ON UTILITY POWER	ATS-001				12VDC	NORMAL SOURCE	FIELD	YES		I-102
30	YIR	030	YIR-030	DI	ENGINE GENERATOR RUNNING	GEN-001				12VDC	RUNNING	FIELD	YES		I-102
31	UCS	030A	UCS-030A	DO	ENGINE GENERATOR OVERRIDE COMMAND	GEN-001				12VDC	OVERRIDE COMMAND	FIELD	YES		I-102
32	UCS	030B	UCS-030B	DO	ENGINE GENERATOR DISABLE COMMAND	GEN-001				12VDC	DISABLE COMMAND	FIELD	YES		I-102
33	UCS	035	UCS-035	DO	MAIN CIRCUIT BREAKER TRIP COMMAND	MCB-001				12VDC	TRIP COMMAND	FIELD	YES		I-102

Notes
1. Interposing relay required unless external resistor used. Coordinate with System Supplier.

Section 13540

MULTIPLE ADDRESS RADIO EQUIPMENT

PART 1 - GENERAL

1-1. SCOPE. This section covers the furnishing of radio communication equipment for the Instrumentation and Control System. Radio equipment shall operate in conjunction with field devices such as the RTU, etc., as described elsewhere in these Specifications. The radio equipment shall consist of a remote radio integral to the Data Flow Systems (DFS) TAC Pack telemetry control unit (TCU) remote telemetry unit (RTU). Data Flow Systems shall coordinate tower and antenna requirements with the Contractor.

1-1.02. Control System. The Instrumentation and Control System section shall apply to all equipment furnished under this section.

1-2. GENERAL. Equipment furnished under this section shall be fabricated, assembled, erected, and placed in proper operating condition in full conformity with the Drawings, Specifications, engineering data, instructions, and recommendations of the equipment manufacturer, unless exceptions are noted by the Engineer.

1-2.01. General Equipment Stipulations. The General Equipment Stipulations shall apply to all equipment provided under this section. If requirements in this specification differ from those in the General Equipment Stipulations, the requirements specified herein shall take precedence.

1-2.02. Drawings. Supplementing this section, the Drawings show the configuration of the radio system, the relative location of the antennae and radio on site plans, and antennae types with support and cable and mounting details. All hardware, including power supplies, special cables, and other appurtenant equipment, shall be provided to meet the functional requirements described herein and indicated on the Drawings.

1-2.03. Accessories. System Supplier shall provide all necessary equipment such as channel processors, line buffers, communication couplers, and modems, to transmit commands and receive data via communication channels. System Supplier shall also provide all radio transmitters, receivers, antennas, cabling, and mounting hardware for a complete operational radio system.

1-3. SUBMITTALS. Submittals shall be as specified in the Instrumentation and Control System section.

1-4. DELIVERY, STORAGE, AND SHIPPING. Delivery, storage and shipping shall be as specified in the Instrumentation and Control System section.

PART 2 - PRODUCTS

2-1. SERVICE CONDITIONS. Radios and accessories shall be suitable for installation in enclosures and for environmental conditions as follows.

Radio Type	Enclosure	Service Conditions
Remote radios	Mounted in enclosure with other equipment	Outdoors Heated enclosure required, Sun shade required

2-2. SPREAD SPECTRUM RADIO – Serial Communications.

2-2.01. Spread Spectrum Radio General Characteristics. The spread spectrum radio general characteristics shall be as follows:

Spread Spectrum Remote Radio	
Data Rate	Up to 19200 baud
Frequency Range	902-928 MHz
Signal Modulation	FM

2-2.02. Communication Channel. Radios indicated on the Drawings or specified herein shall utilize frequency modulated, radio frequency as its communications medium.

Radios indicated to communicate by spread spectrum radio shall operate in the 902 to 928 MHz band in accordance with FCC rules and regulations, Part 15. Spread spectrum radios shall be of the frequency hopping type.

2-2.03. System Equipment. 900 MHz Spread Spectrum serial radio transceivers shall be MDS Model MDS 9810 without exception.

2-2.04. Digital Interface. The digital interface shall have the following characteristics.

2-2.04.01. Field Interface Devices. Interface shall be EIA RS-232 consistent with the remote terminal units furnished herein.

2-2.04.02. RTS/CTS. Interface shall support RTS/CTS handshaking. CTS shall be granted within 10 msec after RTS. Bit Error Rate shall be 1×10^{-6} or better at -110 dBm.

2-2.05. Transmitters. The transmitters shall have the following characteristics.

Spread Spectrum Radios	
Modulation Type	FM
Spurious/Harmonic Emissions	-65 dBc
Output power at antenna port (nominal)	0.1 to 1.0 watt (20 – 30 dBm)
Frequency Stability (-30° to 60° C)	.00015%
Output Impedance	50 ohms
Duty Cycle	100% continuous at 1.0 watts

The transmitter shall remain on for another 0 to 64 msec after it is unkeyed. When keyed on, an interval timer shall start with an adjustable 1 to 30 second range that prevents the transmitter from locking up a channel.

2-2.06. Receivers. The receivers shall have the following characteristics.

Spread Spectrum Radios	
Type	Dual Conversion Superheterodyne
Frequency Stability (-30° to 60° C)	0.00015%
Spurious Image Rejection	-70 dB Minimum
RF Input Impedance	50 ohms

2-2.07. Power Requirements. The Spread Spectrum radio shall be designed for continuous operation on a nominal 12/24 VDC source.

2-2.08. Diagnostic Indicators. The spread spectrum remote radios shall have at least the following indicators for local indication.

Transmit Data Activity
Receive Data Activity
Squelch Open.
Clear to Send.
Hop Synchronization

2-2.09. Radio System Diagnostics. The radios shall include system diagnostic capability to permit continuous or scheduled automatic monitoring of key radio operating parameters and alarm conditions.

2-2.09.01. Remote Transceiver Radio Diagnostic Data/Control Functions. The remote transceiver radio shall have the ability to monitor its internal operation and diagnostic parameters from a hand held terminal or personal computer plugged into the remote transceiver. A loop back decoder board that operates in conjunction with the polling remote radio microprocessor to provide signal strength, frequency error, and deviation levels shall be supplied for each remote transceiver radio. The following data/diagnostic functions shall be supplied.

Transmit and Receive Frequencies (display and control).
Time-out Timer Setting (display and control).
Soft Carrier Dekey Setting (display and control).
Loop Back Code (display and control).
Squelch Tail Eliminator (display and control).
Push-To-Talk delay (display and control).
Clear-To-Send delay (display and control).
Frequency (Remote display and control).
Deviation (Remote display and control).
Transmit Power Output (display and control).
Receiver Signal Strength (display).
Power Supply Voltage (display).
Internal Voltage Regulator Voltage (display).
Phase Lock Loop Voltage (display).
Internal Radio Temperature (display).

2-3. SPREAD SPECTRUM RADIO – Ethernet Communications. Not used.

2-4. MAS RADIO. Not used.

2-5. SURGE SUPPRESSION. System Supplier shall provide an in-line surge suppressor on antenna cables at each radio site to protect the radio equipment from damage by lighting. Surge suppressors shall be Polyphaser Series IS-B50LN-C2 or equal.

Two lengths of superflexible Heliax cable shall be supplied for each surge suppressor; one for the connection between surge suppressor and radio antenna port, and one for the connection between the coaxial transmission cable (1/2 inch and larger) and the antenna. The cable shall be terminated with standard N type connectors. The cable shall be Andrew Superflexible Heliax 1/4 inch Type FSS1-50A.

2-6. ANTENNA CABLE. All cabling between antennas and radio transceivers shall utilize a splice-free foam dielectric coaxial cable cut to length. Foam dielectric coaxial cable shall consist of an inner conductor surrounded by a semiliquid foam dielectric compound, a copper braid outer conductor surrounding the dielectric, and a polyethylene jacket. The installation shall use Type N connectors specifically designed for use with the cable. The Type N connectors

shall be sealed with 3-inch sections of Alpha FIT321-1-0 sealant shrink tubing. The antenna cable shall be of the RG-9 construction type and have the RF loss characteristic of foam flex. The antenna cable shall be secured to the mast/pole with E.V.A.-coated Type 316 stainless steel cable ties. The cable ties shall meet or exceed the quality, reliability and performance of AE112 cable ties manufactured by Band-It. The antenna cable shall be grounded as indicated in the Drawings. The antenna cable shall be RTC 400 as supplied by Data Flow Systems, Inc.

2-7. ANTENNAS. System Supplier shall furnish the antennas and supporting structures at radio sites as indicated on the Drawings. Antennas shall have an S/N (flat weighing) 12.5 dBm threshold at antenna port (3 kHz channel) of -104 dBm S/N for FM – digital.

2-7.01. Omnidirectional Antennas. Not used.

2-7.02. Directional Antennas. A 12.25 dB directional Yagi antenna with a minimum 20 dB front-to-back ratio shall be provided for each remote transceiver radio site and polling remote radio site as indicated on the Drawings. Each antenna shall be of heavy-duty design for permanent installation, with all welded aluminum elements. The antenna shall have a single radiator element connected to a Type N female connector. Yagi antennas shall be RTA series as supplied by Data Flow Systems, Inc..

2-7.03. Wooden Poles. Not used.

2-7.04. Radio Tower Mast. Data Flow Systems shall provide the radio tower height requirements as determined by antenna gain and signal path studies. Tower height shall be coordinated between DFS and the Contractor. The tower mast/pole shall be hot-dipped galvanized for corrosion protection and meet the applicable standards of AISC, AISI, AWS, EIA and FAA. All hardware shall be stainless steel. The tower mast shall meet or exceed the quality and reliability of the AG20 manufactured by Ronan.

The completed antenna system and tower shall be designed and constructed to withstand minimum sustained winds as required by the 2017 Florida Building Code, specified in Section 01611. The design shall be certified by a registered professional engineer registered in the State of Florida.

2-7.05. Radio Masts. Not used.

2-7.06. Grounding Conductors. All ground conductors shall be soft drawn copper cable or bar, not smaller than 12 AWG, bare or green insulated in accordance with the National Electrical Code.

2-7.07. Ground Rods. Ground rods not described elsewhere shall be 5/8 inch diameter by 8 feet long, with a copper jacket bonded to a steel core.

PART 3 - EXECUTION

3-1. GENERAL INSTALLATION REQUIREMENTS. General installation requirements are described in Section 13500.

3-1.01. Radio Equipment. The radio equipment shall be mounted in field device enclosures or in a separate enclosure as specified herein. Separate enclosures shall be furnished with the same NEMA rating and color as the field device enclosure.

3-1.02. Radio Signal Strength Testing. A physical radio path study shall be performed for system configuration parameters and for the sites indicated on the Drawings.

3-1.03. Functional Testing. As a minimum, the following functional tests shall be performed on the communications equipment.

3-1.03.01. Antenna Alignment. After each antenna is permanently installed, a power monitor shall be used to properly adjust the antenna for maximum signal strength. A written report on the monitoring results shall be submitted to the Engineer for review before the radios are placed into permanent operation.

3-1.03.02. Radio Frequency Check. After each radio has been installed but before it is placed into permanent operation, a frequency check shall be conducted to verify conformance with the specified tolerances. The frequency check shall be performed by a radio technician either employed or under subcontract to System Supplier. A written report on the results of this check shall be submitted to the Engineer for acceptance.

3-1.04. Surge Suppressor Installation. Surge suppressors shall be bulkhead mounted on the radio enclosures and shall be suitable for the sizes of cable inside and outside the enclosures.

3-1.05. Installation of Grounding Materials. Electrical system grounding and equipment grounding shall be in compliance with the National Electrical Code.

3-1.06. Antenna Installation. System Supplier shall provide and supervise the installation of antenna equipment at radio sites as indicated on the Drawings. Damage to tanks or reservoirs caused by the Contractor shall be repaired to the Owner’s satisfaction at Contractor’s expense.

End of Section

Section 13550

SOFTWARE CONTROL BLOCK DESCRIPTIONS

PART 1 - GENERAL

1-1. SCOPE. This section provides functional descriptions of the RTU software requirements for the Instrumentation and Control System as indicated on the Drawings. These descriptions are intended to provide an overview of the operating concept of the plant process equipment rather than describing in detail every operating feature or interlock.

1-1.01. Control System. The Instrumentation and Control System section shall apply to all systems described in this section.

PART 2 – PRODUCTS

2-1. GENERAL. The descriptions are applicable to the software specified in the Remote Terminal Units section.

PART 3 - EXECUTION

3-1. RTU PROGRAMMING FUNCTIONAL REQUIREMENTS. The following paragraphs describe general configuration tasks that are required for the system RTU. These tasks shall be programmed in any applicable RTU. Each RTU may have multiple instances of each of these tasks, or may have no instances of some or all of these tasks. The input/output lists (located in these documents as specified in the Instrumentation and Control System section) and detailed equipment control descriptions (included herein) shall be referenced to determine the requirements for each RTU.

The following paragraphs cover functional requirements of the software, which are generic and may or may not be related to any specific control loop.

3-1.01. Available Process Values. All RTU-generated process alarm, equipment status, and process variable values shall be available at any operator workstation.

3-1.02. Flow Values. Not used.

3-1.03. System Failure. Failure of a RTU shall result in safe shutdown of associated process equipment. Interposing relays shall be provided where required to assure that equipment will revert to its fail-safe condition. Failure of any RTU or its communication shall be alarmed on the human-machine interface (HMI) computer.

3-1.04. HMI Computers. The HMI computers shall function as a monitoring system, not as a controller, for the process equipment. The computer shall download set points and other information to the RTUs, and the RTUs shall perform all control algorithms, so a temporary failure of the any HMI computer will not disrupt plant control.

3-1.05. Rack/Module Configuration. The module definitions for each RTU, as well as the RTU communications configuration shall be completely configured to allow proper addressing of all field connected I/O points. This shall include configuration of any remote input/output (RIO) racks.

3-1.06. RTU Database Definition. The RTU database will include both field I/O points and internally generated points required for programming. All field I/O points and internal programming points shall be fully defined according to database naming conventions approved by Owner. As a minimum, each database point shall be provided with a tag name, engineering unit, alarm parameters, and description.

3-1.07. Analog Scaling. Each analog input and output will be appropriately scaled for use in internal RTU programming, monitoring by the HMI computers, or transmission to other controllers. Requirements for raw count values shall be coordinated with the operator interface software to ensure compatibility.

3-1.08. Equipment Runtimes. For each equipment item whose "run" status is monitored by a RTU, an internal equipment runtime shall be accumulated by the respective RTU. The runtime procedure will monitor the status of the equipment "run" contact and, when the equipment is running, increment a software timer that maintains equipment runtime to within a one-minute resolution. The timer shall stop incrementing, but not reset, when the "run" contact indicates that the equipment is not running. The timer value shall increment an hour counter that maintains an integer value representing the equipment run time in hours. The counter value shall be available for display on the HMI computer. A manual reset of the runtime value shall be available at the HMI computers for personnel at the supervisor level and above.

3-1.09. Change-of-State Alarms. While equipment is controllable from the RTU ("in remote"), discrete output commands shall be compared to their respective process feedback status signal (where available) to verify proper execution. If the feedback status does not match the most recent output command (after an adjustable 2 to 300 second time delay), an alarm message shall be displayed on the HMI computer and the condition shall be logged as an alarm, requiring operator acknowledgment. The alarm shall remain energized until the proper discrete condition is sensed or until the operator resets the alarm through the HMI computer.

3-1.10. Equipment Availability. In general, equipment with RTU control has

been provided with a local selector switch that transfers control to the RTU. The RTU shall monitor the position of this switch to determine if the equipment is available for RTU control. If the equipment is not available, the RTU program shall not attempt to implement remote manual or automatic status changes for the equipment. The RTU program may, however, need to implement special routines if equipment unavailability affects a sequence (as described in the detailed equipment descriptions).

3-1.11. Maintained/Momentary Outputs. The need for maintained or momentary control outputs shall be determined from the input/output listing and the electrical schematics. In general, equipment with only one control output indicated in the I/O list shall be programmed for a maintained control output. Equipment with two (or more) control outputs shall be programmed for momentary outputs. Provisions shall be made, in either case, to remove the active state (start, open, forward, initiate, etc.) control output when an equipment failure is sensed or when the equipment transitions from available to unavailable (local switch change).

3-1.12. Equipment Mode Changes. Unless otherwise indicated in the equipment control descriptions, equipment in automatic mode shall be transitioned to manual mode (and stopped) if the equipment fails or becomes unavailable or if the RTU processor resets.

3-1.13. Manual/Auto Bumpless Transfer. Unless otherwise indicated in the equipment control descriptions, equipment changes from automatic to manual control shall be bumpless. Equipment running or stopped in automatic mode shall remain running or stopped when manual mode is selected.

3-2. HMI FUNCTIONAL REQUIREMENTS. The following paragraphs describe general configuration tasks that are required for the HMI and related software.

3-2.01. Database. The system database, including field I/O and internal points shall be established according to the database point naming conventions approved by Owner. Database generation for field I/O shall include all required coordination with RTU level addresses. If no Owner database point naming conventions are available, the database names shall utilize an ISA or ISA-like tag name.

In the default scheme, the format of the tag name is XXX-YYY-ZA.

XXX is the ISA function designation.
YYY-ZA is the unique loop designation defined by the P&IDs.

Where possible YYY-ZA will correspond to the loop numbers on the P&IDs. Otherwise, a unique number shall be assigned. Z is a number (1, 2, 3) to designate similar loops associated with trains of equipment. A is a letter (A, B, C) to designate identical functions within the same loop. For instance, if there

are two ferric sulfate metering pumps and the loop number chosen is 222, the remote status input for pump number one might be HS-222-1 and the remote status input for pump number two might be HS-222-2. If there is more than one switch input for either pump the tag name would be HS-222-1A and the second switch would be HS-222-1B.

Function designations currently defined are listed below:

AI's (Analog Inputs)

AIT - Analytical Input	PDIT - Differential Pressure Input (Headloss)
EIT - Voltage Input	PIT - Pressure Input
EIIT - VAR Input	ST - Speed or Rate Input
FIT - Flow Input	TIT- Temperature Input
IIT - Current Input	WIT - Weight Input
JIT - Power Input	ZT - Position Input
LIT - Level Input	

AO's

AC - Residual Proportioning Control	SC - Speed or Rate Control
FC - Flow Proportioning Control	ZC - Position Control

DI's

AAH - Analytical Alarm High	PDAH - High Differential Status
AAL - Analytical Alarm Low	PA - Pressure Alarm Hi/Lo or Unspecified
FAH - High Flow Status	PAL - Low Pressure Status
FAL - Low Flow Status	PALL - Low Pressure Cutoff Alarm
HS - Hand Switch Status	WAL - Low Weight Alarm
JA - Electrical Alarm	XA - General or Unspecified Alarm
LAH - High Level Status	YA - Equipment Overload Alarm (Failure)
LAHH - High Water Cutoff Alarm	YS - Equipment Run Status
LAL - Low Level Status	ZSC - Position Closed Status
LALL - Low Water Cutoff Alarm	ZSO - Position Open Status

DO's

LC - PLC Generated LWCO Output

XC - General Control Output

YC - Equipment Start/Stop Command

ZCC - Equipment Close Command

ZCO - Equipment Open Command

Initially, the facility database shall be configured so all database points are defined as belonging to a specific area (as allowed by the graphical interface software). The areas designated for the facility shall be coordinated with Owner. If Owner has no existing standards for area designations, all points can be placed in appropriate areas selected by System Supplier.

3-2.02. Trend Displays. Trend displays shall be developed to present real-time and historical process data in an X-Y graph format. Real-time trends shall utilize current process values to generate temporary graphs that do not retain data values. Historical trends shall utilize historically collected data and shall access the data files directly for use in the trend display. Historical trends shall allow paging forward and back to the limits of the collected data. The trending package shall be configured to automatically retrieve historical data from the proper data file to accommodate the paging functions. Content of the trends will be determined after meeting with Owner. One real-time trend display and one historical trend displays shall be provided.

3-2.03. Alarms. Complete system alarming shall be configured. This shall include configuration of graphical alarm displays, and configuration of audible alarms through the HMI speakers. All process or system alarms shall appear on an alarm summary screen and the alarm banner of each process graphic. Alarms and events shall be color coded on the alarm summary screen, with initial colors based on Owner conventions or the default colors associated with the graphics package. The colors may be adjusted after meeting with Owner. Alarm prioritizing and area assignments (if any) shall be coordinated with Owner at the first configuration meeting.

For LOW or LOW-LOW analog or discrete alarms which do not apply if associated equipment is not operating, provisions shall be made to prevent/Lock generation of the alarm unless the associated equipment is operating. This shall include alarms such as low amperage alarms for pumps that are not running. This may also include low flows or pressures when associated pumps are not operating (this will only apply if periodic operation of the equipment is considered normal).

All alarms/events shall be time stamped when displayed or printed. Unacknowledged alarms shall not automatically clear from the alarm summary if

they return to normal before being acknowledged.

3-2.04. Reporting. System reporting shall be accomplished using the standard operator interface software-reporting package. All necessary report development, including macro development in spreadsheets, shall be supplied to access real-time and historical data for reporting. One historical, monthly facility report shall be provided.

3-2.05. Historical Data Collection. System data shall be collected for historical archiving and for use in trending and reporting functions. Requirements for data collection shall be as needed to support the trends and reports developed.

3-2.06. Manual Entry of Data. The HMI computers shall allow manual entry of laboratory data and other variables, which shall then be available for display and use in reports. Operator entered commands from any of the HMI computers shall be logged at all HMI computers.

3-3. EQUIPMENT CONTROL AND CONTROL MODE OVERVIEW. The following paragraphs explain the general format and control modes that are used in the detailed equipment descriptions. These paragraphs apply to the attached, project specific, equipment control descriptions included herein.

3-3.01. General. Appended to this section are the equipment control programming requirements, with requirements for both RTU programming and the minimum operator interface functions. The HMI requirements represent the anticipated display generation requirements and shall be adjusted if the RTU programming warrants adjustment.

3-3.02. Control Modes. There are two general control modes available for the process equipment: 1) local manual, 2) local auto, 3) remote manual, 4) remote auto. Remote manual control provides a means for operators to adjust equipment status or setpoint, through the HMI, using manually initiated commands. Remote automatic control provides a means for automatically changing equipment status or setpoint based on measured process parameters, calculated values, or operator setpoints.

Descriptions for local control are included in the detailed equipment control descriptions. They are provided primarily for documentation purposes and for information. These controls are hardwired and require no programming effort.

3-4. DETAILED EQUIPMENT CONTROL DESCRIPTIONS. The following paragraphs describe specific function requirements for various software control blocks in the control system. These descriptions are intended to provide an overview of the operational concept for the facilities, rather than describing in detail every operating feature or interlock.

3-4.01. Pump Station Wetwell Submersible Pumps

3-4.01.01. General

Major Equipment: Submersible Pumps P-010 and P-020

Loop Components:

1. LIT-001 – Pump Station Wetwell Level
2. LSHH-001 – Pump Station Wetwell Level High-High
3. LSLL-001 – Pump Station Wetwell Level Low-Low

Associated Control Panels: Pump Control Panel CP-07

Associated P&ID: I-101

3-4.01.02. Equipment Control Modes

The Pump Station Wetwell Submersible Pumps shall be provided with the following types of control: In any control mode, submersible pumps shall be interlocked with its associated motor windings high temperature switch, leak detection switch, and the Pump Station Wetwell Level Low-Low Switch. When a high temperature condition is detected, a leak is sensed, or the Low-Low Level is detected, hardwired interlocks shall stop the associated pump(s). When a high temperature condition is detected or a leak is sensed, the pump shall not resume operation until the RESET pushbutton is pressed.

Local Manual Mode

Local Manual Mode of the submersible pumps shall be provided via the panel-mounted instrumentation on Pump Control Panel CP-07. Each pump shall be equipped with a Local-Remote (LR) switch and an On-Off-Auto (OOA) switch. Local control shall be provided when the LR switch is in the LOCAL position and the OOA switch is in the ON or OFF position. Monitoring of system processes will be provided by associated indicating lights, panel-mounted displays, and the RTU's integral LCD display.

Additional local control of the submersible pumps shall be provided through the Hand-Off-Auto (HOA) selector switches integral to the RTU Controller.

Local Auto Mode

Local Auto Mode of the submersible pumps shall be provided when the LR switch is in the LOCAL position and the OOA switch is in the AUTO position. The function of the Local Auto Mode will be as described in the Remote Auto Mode section. Monitoring of system processes will be provided by associated

indicating lights, panel-mounted displays, and the RTU's integral LCD display.

Local Auto Mode of the submersible pumps shall be provided when the HOA selector switch integral to the RTU Controller located at the Pump Station is in AUTO.

Remote Manual Mode

Remote Manual Mode of the submersible pumps shall be provided when the LR switch is in the REMOTE position. Remote manual mode commands and monitoring shall be routed through the RTU. Remote Manual control shall be performed when manual is selected at the HMI for any pump. Pump control shall be performed by the operator using manual commands at the HMI popup window.

Remote Manual Mode of the submersible pumps shall be provided when the HOA selector switch integral to the RTU Controller located at the Pump Station is in AUTO.

Remote Auto Mode

The RTU shall regulate wetwell level by controlling the submersible pumps in a duty-standby configuration. The major process equipment consists of two (2) constant-speed submersible pumps:

1. P-010
2. P-020

Controller pump start commands will be dependent on the wetwell level. On a rising wetwell level, the duty pump shall start once the wetwell has reached HIGH level. The duty pump shall remain running once the wetwell has reached High-High level. On a falling wetwell level, the duty pump shall be disabled once the level has reached LOW level. Both pumps shall be disabled at Low-Low level by the hardwired interlock.

Local Auto Mode of the submersible pumps shall be provided when the Hand-Off-Auto selector switch integral to the RTU Controller located at the Pump Station is in Auto.

Setpoints and Ranges

The ranges for the Pump Station Wetwell level switches shall be scaled to the ranges identified in the I/O Schedule. The LOW and HIGH level setpoints shall be calculated by the RTU based on the level transmitter input. The calculated level setpoints shall be initialized to the following values:

- LOW: EL (-) 9.30 FT
- HIGH: EL (-) 5.0 FT

These setpoints shall be user-configurable via the HMI. Setpoints adjustments shall be password protected by user administration level. Setpoints shall also be protected such that LOW and HIGH are sequential in elevation.

Expected System Upsets & Methods of Recovery

In the event of a duty pump failure due to motor windings high temperature switch, leak detection switch, or motor overload, the standby pump shall be substituted for the failed pump and shall operate as the duty pump. In the event of a failure for either pump, the respective HMI indication shall remain on until acknowledged by the operator. In order for these actions to occur, the pumps must be in remote auto mode.

Equalization of Pump Runtimes

In order to evenly distribute pump runtimes and mechanical wearing, the duty pump shall alternate between pumps after each running cycle.

Power Failure

Upon power failure, pump control shall resume automatically, without manual intervention.

HMI Requirements

A new Pump Station HMI screen shall be configured that will show the wetwell and submersible pumps. All of the following signals that are associated with the submersible pumps and identified on the P&ID and the I/O Schedule shall be displayed on this screen.

- Wetwell
  - Level
  - Low-Low Level Alarm
  - High-High Level Alarm
- Submersible Pumps (typical signals listed for each transfer pump)
  - Running
  - In Remote
  - In Auto
  - Pump Runtime
  - Fault

The pump HMI symbols shall be selectable targets that open a common popup window for control of the submersible pumps. From this popup window, the operator shall be capable of assigning the submersible pump duty and standby

designations, selecting manual or automatic control modes for each pump, and controlling the manual operation of the pumps using Start and Stop selectable targets for each pump. The calculated level setpoints shall be a selectable target that opens a popup window. The window shall contain data entry fields that can modify calculated level setpoints. These setpoints will be written to the corresponding register in the RTU.

On the HMI screens and popup windows, the color of the pump symbols shall change depending on its operational or alarm status. The color of the pump symbol shall change as follows:

- Running – Red
- Off – Green
- Fault – Flashing Amber Box Behind Symbol

Current wetwell level shall be displayed on the overview screen and shall be historically recorded and available for trending.

The running time for each transfer pump shall be totalized for the day. At the end of each day, (set at 11:55 pm), these total running times shall be recorded. These recorded values shall be used for daily, monthly, and annual reports.

End of Section

SECTION 13561

PANEL MOUNTED INSTRUMENTS

PART 1 - GENERAL.

1-1. SCOPE. The Panel Mounted Instruments section covers the furnishing of all panel mounted instruments and accessories required for the Instrumentation and Control System as specified herein or as indicated on the Drawings.

Equipment and services provided under this section shall be subject to the Instrumentation and Control System section. This section shall be used and referenced only in conjunction with the Instrumentation and Control System section. Supplementing the Instrumentation and Control System section, instrument data, special requirements, and options are indicated on the Drawings or the Instrument Device Schedule.

When multiple instruments of a particular type are specified, and each requires different features, the required features are described on the Drawings or the Instrument Device Schedule.

1-2. DESIGN CRITERIA. The instruments shall be installed to measure, monitor, or display the specified process at the ranges and service conditions indicated on the Drawings or as indicated in the Instrument Device Schedule. The instruments shall be installed at the locations indicated on the Drawings or the Instrument Device Schedule.

Where possible, each instrument shall be factory calibrated to the calibration ranges indicated on the Drawings or in the Instrument Device Schedule. Transmitters or similar measurement instruments shall be calibrated using National Institute of Standards and Technology (NIST) approved bench calibration procedures, when such procedures exist for the instrument type. For "smart" devices, calibration data shall be stored digitally in each device, including the instrument tag designation indicated on the Drawings and/or Instrument Device Schedule.

1-3. SUBMITTALS. Submittals shall be as specified in the Instrumentation and Control System section.

PART 2 - PRODUCTS

2-1. GENERAL. The following paragraphs describe minimum device stipulations. The Drawings or Instrument Device Schedule shall be used to determine any additional instrument options, requirements, or service conditions.

2-1.01 Programming Device. For systems that require a dedicated programming device for calibration, maintenance, or troubleshooting, one such programming device shall be provided for each Owner facility (quantity required shall be as indicated in the Instrumentation and Control System section). The programming device shall include appropriate operation manuals and shall be included in the training stipulations. For systems that allow the programming device functions to be implemented in software, running on a laptop computer, the software shall be provided instead of the programming device.

2-1.02 Configuration Software/Serial Interface. Devices indicated as requiring a serial interface shall be provided with all accessories to properly communicate over the serial link. An appropriate cable shall be provided to allow the transmitter serial interface to be connected to a laptop computer. One licensed copy of the diagnostic/interface software shall be provided for each Owner facility (quantity required shall be as indicated in the Instrumentation and Control System section). Software shall be capable of running under the Windows 10 operating system. If the software furnished performs the same functions as the programming device, specified elsewhere, then the programming device need not be furnished.

2-2. PANEL FRONT MOUNTED DEVICES.

2-2.01. Totalizers. Totalizers shall have miniature, rectangular, semi-flush counters, designed for use in conjunction with miniature indicators and recorders, and shall be of such a design that only the counter is flush-mounted and the associated integrating mechanism is located in the rear of the panel. The counter shall contain not less than seven LCD digits, with a multiplier of a power of 10 plainly engraved on the face of the counter, or on a nameplate below the counter, so a full range of 9,999,999 is reached before repeating. Totalizers shall not reset upon power failure. Totalizers shall be as manufactured by Eaton/Durant, Specialty Product Technologies/Veeder-Root, or Omron.

2-2.02. Switches, Lights, and Push Buttons.

2-2.02.01. Selector Switches. Selector switches shall be 30.5-mm, heavy-duty, oil-tight type with gloved-hand or wing lever operators. Position legends shall be engraved on the switch faceplate. Switches for electric circuits shall have silver butting or sliding contacts, rated 10 amperes continuous at 120 V ac. Contact configuration shall be as indicated on the Drawings or for the application. Switches used in electronic signal circuits shall have contacts suitable for that duty. Switches shall be Eaton/Cutler-Hammer "10250T", General Electric "CR104P", or Allen Bradley “800T”.

2-2.02.02. Indicating Lights. Indicating lights shall be 30.5-mm, heavy-duty, oil-tight type, with full voltage LED lamps. Legends shall be engraved on the lens or on a legend faceplate. Lights shall be push-to-test type. Indicating lights shall be

Eaton/Cutler Hammer "10250T", General Electric "CR104P", or Allen Bradley "800T".

2-2.02.03. Push Buttons. Push buttons shall be 30.5-mm, heavy-duty, oil-tight type. Legends shall be engraved on the push-button faceplate. Contacts shall be rated 10 amperes continuous at 120 V ac. Push buttons shall be Eaton/Cutler-Hammer "10250T", General Electric "CR104P", or Allen Bradley "800T".

2-2.03. Alarm Horns. Horns shall be high-decibel, panel-mount, vibrating type designed for heavy-duty use. Horn volume shall be field-adjustable from 78 to 103 dB at 10 feet. Horns shall operate at 120 volts ac. Horns shall be weatherproof NEMA Type 4X. Horns shall be panel front mounted and shall be supplied with gasket. Horns shall be Edwards Signals "870P Series."

2-3. PANEL INTERIOR MOUNTED DEVICES.

2-3.01. Power Supplies. Regulated dc power supplies for instrument loops shall be designed and arranged so that loss of one supply does not affect more than one instrument loop or system. Power supplies shall be suitable for an input voltage variation of ±10 percent, and the supply output shall be fused or shortcircuit protected. Output voltage regulation shall be by the instrumentation equipment supplied. Multiloop or multisystem power supplies will be acceptable if backup power supply units are provided which will automatically supply the load upon failure of the primary supply. The backup supply systems shall be designed so either the primary or the backup supply can be removed, repaired, and returned to service without disrupting the instrument system operation. Multiloop power supply connections shall be individually fused so a fault in one instrument loop will be isolated from the other loops being fed from the same supply. Fuses shall be clearly labeled and shall be located for easy access. Multiloop supply systems shall be oversized for an additional 10 percent future load. Failure of a multiloop supply shall be indicated on the respective instrument panel or enclosure.

Power supplies shall be Allen Bradley, Phoenix Contact, PULS, or equal.

2-3.02. Relays. Relays indicated to be provided in panels, enclosures, or systems furnished under this section shall be of the plug-in socket base type with dustproof plastic enclosures unless noted otherwise. Relays shall be UL recognized and shall have not less than double-pole, double-throw contacts. Control circuit relays shall have silver cadmium oxide contacts rated 10 amperes at 120 V ac. Electronic switching-duty relays shall have gold-plated or gold alloy contacts suitable for use with low-level signals. Relays used for computer input, alarm input, or indicating light service shall have contacts rated at least 3 amperes. Time delay relays shall have dials or switch settings engraved in seconds and shall have timing repeatability of ±2 percent of setting. Latching

and special purpose relays shall be for the specific application. Unless otherwise indicated, all relays shall have an integral pilot light that illuminates to indicate an energized condition. Relays shall be IDEC "Series RR"; Potter & Brumfield "Series KRP, CB"; or Struthers-Dunn "Series 219, 246".

2-3.03. Strip Heaters. Electric strip heaters shall be provided as indicated on the Drawings, as specified, and for the application. Strip heaters shall be sized to prevent condensation within the enclosure and to maintain the equipment above its minimum operating temperature. Strip heaters shall be located to avoid overheating electronic hardware or producing large temperature fluctuations. Strip heaters shall be controlled by adjustable thermostats with adjustment ranges of 30° to 90°F . A circuit disconnect switch shall be provided within the enclosure.

2-3.04. Intrinsically Safe Barriers. Barriers shall be solid-state electronic type in which the energy level of the sensing or actuation circuit is low enough to allow safe use in hazardous areas. Barriers shall be located in non-hazardous areas. Barriers shall be manufactured by MTL, R. Stahl, Inc., or Turck.

PART 3 – EXECUTION

3-1 FIELD SERVICES. Manufacturer's field services shall be provided for installation, field calibration, startup, and training as specified in the Instrumentation and Control System section. Instruments shall not be shipped to the Work Site until two weeks prior to the scheduled installation. System Supplier shall be responsible for coordinating the installation schedule with the Installation Contractor. Each shipment shall contain a listing of protective measures required to maintain sensor operation, including a listing of any common construction or cleaning chemicals that may affect instrument operation.

End of Section

Section 13563

PRESSURE AND LEVEL INSTRUMENTS

PART 1 - GENERAL

1-1. SCOPE. This section covers the furnishing of pressure and level instruments and accessories required for the Instrumentation and Control System as specified herein or as indicated on the Drawings.

Equipment and services provided under this section shall be subject to the Instrumentation and Control System section. This section shall be used and referenced only in conjunction with the Instrumentation and Control System section. Supplementing the Instrumentation and Control System section, instrument data, special requirements, and options are indicated on the Drawings or the Instrument Device Schedule.

When multiple instruments of a particular type are specified, and each requires different features, the required features are described on the Drawings or the Instrument Device Schedule.

1-2. DESIGN CRITERIA. Each device shall be a pre-assembled, packaged unit. Upon delivery to the work site, each device or system shall be ready for installation with only minor piping and electrical connections required by Contractor.

Primary elements shall derive any required power from the transmitter, unless otherwise indicated.

The instruments shall be installed to measure, monitor, or display the specified process at the ranges and service conditions indicated on the Drawings or as indicated in the Instrument Device Schedule. The instruments shall be installed at the locations indicated on the Drawings or in the Instrument Device Schedule.

Where possible, each instrument shall be factory calibrated to the calibration ranges indicated in the Drawings or in the Instrument Device Schedule. Transmitters or similar measurement instruments shall be calibrated using National Institute of Standards and Technology (NIST) approved bench calibration procedures, when such procedures exist for the instrument type. Calibration data shall be stored digitally in each device, including the instrument tag designation indicated on the Drawings and/or Instrument Device Schedule.

1-3. SUBMITTALS. Submittals shall be made as specified in the Instrumentation and Control System section.

1-4. SHIPMENT, PROTECTION, AND STORAGE. Equipment provided under this section shall be shipped, protected, and stored in accordance with the requirements of the Instrumentation and Control System section. Identification of packaging shall be as described in the Instrumentation and Control System section.

PART 2 - PRODUCTS

2-1. GENERAL. The following paragraphs provide minimum device stipulations. The Drawings or Instrument Device Schedule shall be used to determine any additional instrument options, requirements, or service conditions.

2-1.01. Interconnecting Cable. For systems where the primary element and transmitter are physically separated, interconnecting cable from the element to the transmitter shall be provided. The cable shall be the type approved by the instrument manufacturer for the intended purpose of interfacing the element to the transmitter. Length of cable shall be a minimum of three meters or as indicated in the Drawings or Instrument Device Schedule.

2-1.02. Programming Device. For systems that require a dedicated programming device for calibration, maintenance, or troubleshooting, one such programming device shall be provided for each Owner facility (quantity required shall be as indicated in the Instrumentation and Control System section). The programming device shall include appropriate operation manuals and shall be included in the training requirements. For systems that allow the programming device functions to be implemented in software, running on a laptop computer, the software shall be provided instead of the programming device.

2-1.03. Configuration Software/Serial Interface. Devices indicated as requiring a serial interface shall be provided with all accessories required to properly communicate over the serial link. An appropriate cable shall be provided to allow the transmitter serial interface to be connected to a personal computer. One licensed copy of the diagnostic/interface software shall be provided for each Owner facility (quantity required shall be as indicated in the Instrumentation and Control System section). Software shall be capable of running under Microsoft's Windows 8.1 operating system. If the software furnished performs the same functions as the programming device, specified elsewhere, then the programming device shall not be furnished.

2-2. PRESSURE AND LEVEL INSTRUMENTATION.

2-2.01. Bubbler System. All bubbler system components shall be designed for long life and maintenance-free operation at the expected operating conditions. The bubbler system shall be equipped with redundant compressors, capable of automatic switchover in the event of compressor failure. The system shall turn on

compressors based on air receiver pressure, and shall evenly distribute run-time between both compressors. The device shall feature an automatic bubbler tube purge to prevent tube debris build-up and other obstructions. It shall automatically initiate a moisture dump cycle at defined intervals. The unit shall be powered by 120 V ac.

The bubbler system unit shall house the transmitter, providing a 4-20mA dc signal proportional to the level measurement range. Accuracy of the transmitter shall be within one percent of span. The unit shall be equipped with dry contacts to provide an alarm output in the event of a system failure.

For outdoor installation, the unit shall be housed behind the subpanel in CP-07, as specified in Section 13570. Bubbler system components shall be rated for operating temperatures of -5° to +122°F and a relative humidity of 10 to 100 percent.

The bubbler system shall be Digital Control Company BLT 12138-2, without exception.

2-2.02. Fixed-Mount Float Type Level Switches. Switches shall be of the floating ball type, with a nominal 5-1/2 inch diameter, coated stainless steel float ball that contains a sealed switch assembly. The float shall be supported with a flexible synthetic rubber hinge fastened to an adjustable mounting bracket. The hinge shall also act as a housing for the lead wires from the alarm switch. The lead wire shall be a waterproof cable of such length that no splice or junction box is required in the wet well. Stainless steel mounting accessories shall be furnished. The switch contacts shall be single-pole-single-throw rated 1-amp [A] at 120 V ac. Switches shall be Siemens "9G-EF" or Contegra “FS 90”.

2-2.03. Field-Mount Pressure Gauges. Pressure gauges shall be of the indicating dial type, with C-type phosphor bronze Bourdon tube; stainless steel rotary geared movement; phenolic or polypropylene open front turret case; adjustable pointer; stainless steel, phenolic, or polypropylene ring; and acrylic plastic or shatterproof glass window.

Gauge dial shall be 4-1/2 inch size, with white background and black markings. The units of measurement shall be indicated on the dial face. Subdivisions of the scale shall conform to the requirements of the governing standard. Pointer travel shall be not less than 200 degrees or more than 270 degrees of arc.

Surface-mounted gauges shall be provided with 1/4 inch NPT connections. All stem-mounted gauges shall be provided with 1/2 inch NPT connections. Where indicated in the Drawings or on the Instrument Device Schedule, stem mounted gauges shall have an adjustable viewing angle to allow the gauge to be positioned for optimum viewing.

All pressure gauges shall measure in psi and all vacuum gauges in inches water. All gauges shall have a suitable range to give mid-scale readings under normal conditions. Gauge accuracy shall be 0.5 percent of scale range.

Each gauge shall be provided with a threaded end, ball-type gauge valve. Gauge valve materials shall be compatible with the measured process. Where the process is not defined, gauge valves shall have AISI Type 316 stainless steel wetted parts and Teflon seals. Multi-port gauge valves shall have all unused ports plugged. Gauge valve construction shall be as detailed in the Miscellaneous Instruments section.

Where indicated on the Drawings or in the Instrument Device Schedule, a diaphragm seal shall be provided for the respective gauge. Diaphragm seals shall be thread-attached type with removable AISI Type 316 stainless steel diaphragm, zinc or cadmium plated carbon steel upper housing, and stainless steel lower housing. The upper housing shall be contoured to fit and provide a seat and seal for the diaphragm and shall be designed to permit removal of the gauge with the system under pressure. The lower housing shall be provided with a tapped and plugged 1/4 inch NPT flushing connection. Each diaphragm seal and the gauge served shall be factory assembled, filled with a suitable fluid, and calibrated as a unit.

Gauges shall be installed at the locations indicated on the Drawings, with installation conforming to the installation details. All gauges, snubbers, and diaphragm seals shall be installed in the vertical, upright position. Thread sealer, suitable for use with the associated process, shall be used in the assembly of threaded connections. All connections shall be free from leaks. Lines shall be purged of trapped air at gauge locations prior to installation of the gauge or diaphragm seal.

Each gauge shall be provided with all required mounting hardware to securely mount the unit according to the mounting requirements indicated in the Drawings or the Instrument Device Schedule.

Unless otherwise indicated, mounting and installation hardware shall be Type 316L stainless steel.

Pressure gauges shall be Ashcroft "1279 Duragauge", or equal.

PART 3 - EXECUTION

3-1. FIELD SERVICES. Manufacturer's field services shall be provided for installation, field calibration, startup, and training as specified in the Instrumentation and Control System section.

Instruments shall not be shipped to the Work Site until two weeks prior to the scheduled installation. System Supplier shall be responsible for coordinating the installation schedule with the Installation Contractor. Each shipment shall contain a listing of protective measures required to maintain sensor operation, including a listing of any common construction or cleaning chemicals that may affect instrument operation.

End of Section

Section 13564

PROCESS ANALYTICAL INSTRUMENTS

PART 1 - GENERAL.

1-1. SCOPE. This section covers the furnishing of all process gas analytical instruments and accessories required for the Instrumentation and Control System as specified herein or as indicated on the Drawings.

Equipment and services provided under this section shall be subject to the Instrumentation and Control System section. This section shall be used and referenced only in conjunction with the Instrumentation and Control System section. Supplementing the Instrumentation and Control System section, instrument data, special requirements, and options are indicated on the Drawings or the Instrument Device Schedule.

When multiple instruments of a particular type are specified, and each requires different features, the required features are described on the Drawings or the Instrument Device Schedule.

1-2. DESIGN CRITERIA. Each device shall be a pre-assembled, packaged unit. Upon delivery to the work site, each device or system shall be ready for installation with only minor piping and electrical connections required by Contractor.

Primary elements shall derive any required power from the transmitter, unless otherwise indicated.

The instruments shall be installed to measure, monitor, or display the specified process at the ranges and service conditions indicated on the Drawings or as indicated in the Instrument Device Schedule. The instruments shall be installed at the locations indicated on the Drawings or the Instrument Device Schedule.

Where possible, each instrument shall be factory calibrated to the calibration ranges on the Drawings or in the Instrument Device Schedule. Transmitters or similar measurement instruments shall be calibrated using National Institute of Standards and Technology (NIST) approved bench calibration procedures, when such procedures exist for the instrument type. Calibration data shall be stored digitally in each device, including the instrument tag designation indicated on the Drawings or in the Instrument Device Schedule.

1-3. SUBMITTALS. Submittals shall be made as specified in the Instrumentation and Control System Section

1-4. SHIPMENT, PROTECTION, AND STORAGE. Equipment provided under this section shall be shipped, protected, and stored as specified in the Instrumentation and Control System section. Identification of packaging shall be as described in as specified in the Instrumentation and Control System section.

1-4.01. Cleaning. Instruments indicated to be utilized in oxygen, ozone, or similar service shall be cleaned for oxygen service, labeled appropriately, and bagged or packaged as necessary to ensure the instrument will remain suitable for insertion in the process during installation. Any special mounting or installation requirements associated with such instruments shall be detailed on tags attached to the instrument.

PART 2 - PRODUCTS

2-1. GENERAL. The following paragraphs provide minimum device stipulations. The Drawings and/or Instrument Device Schedule shall be used to determine any additional instrument options, requirements, or service conditions.

2-1.01. Interconnecting Cable. For instruments where the primary element and transmitter are physically separated, interconnecting cable from the element to the transmitter shall be provided. The cable shall be the type approved by the instrument manufacturer for the intended purpose of interfacing the element to the transmitter. Length of cable shall be a minimum of three meters or as indicated in the Drawings.

2-1.02. Programming Device. For instruments that require a dedicated programming device for calibration, maintenance, or troubleshooting, one such programming device shall be provided for each Owner facility (quantity required shall be as indicated in the Instrumentation and Control System section). The programming device shall include appropriate operation manuals and shall be included in the training requirements. For systems that allow the programming device functions to be implemented in software, running on a laptop computer, the software shall be provided instead of the programming device.

2-1.03. Configuration Software/Serial Interface. Devices indicated as requiring a serial interface shall be provided with all accessories required to properly communicate over the serial link. An appropriate cable shall be provided to allow the transmitter serial interface to be connected to a personal computer. One licensed copy of the diagnostic/interface software shall be provided for each Owner facility (quantity required shall be as indicated in the Instrumentation and Control System section). Software shall be capable of running under Microsoft's Windows 10 operating system. If the software furnished performs the same functions as the programming device, specified elsewhere, then the programming device shall not be furnished.

2-2. PROCESS GAS ANALYTICAL INSTRUMENTATION.

2-2.01. Gas Detector Systems. Gas detector systems shall be furnished complete with sensors, power supplies, alarm modules, enclosures, and appurtenant devices suitable for detecting gases as indicated on the Drawings or as listed in this section. Detector systems shall be located as indicated on the Drawings.

Gases to be detected and associated detector sensor ranges and nominal alarm setpoints shall be as follows:

Gas	Nominal Range	Nominal "Warning" and "Alarm" Values
Combustible Gas (methane)	0-100 percent LEL	10 percent/ 50 percent LEL

Accuracy of each gas detector system shall be 2 percent of full scale, and zero drift shall not exceed 5 percent per year. Gas detector systems shall be suitable for an operating temperature range of 0 to 122°F.

The gas detector system transmitter and receiver-alarm modules shall be housed in weatherproof NEMA 4X enclosures suitable for an operating temperature of -4°F to 122°F, with a relative humidity of 5 to 95 percent. The system shall provide a LED or LCD readout with units of the corresponding sensor engraved on the module face or included on the LCD readout. The system shall have at least two independently adjustable alarms with corresponding dry contacts and one unit failure alarm contact. The modules shall be provided with accessories required to calibrate measurement span and adjust user-configurable setpoints. The gas detector system shall be powered by a suitable power supply and shall be designed with failsafe circuitry, so that alarm contacts fail in the alarm condition upon power or sensor failure. Transmitters shall have an intrinsically safe, isolated 4-20 mA dc output signal representing the calibrated range of the detector system and capable of driving an external 250 ohm load.

Gas detector systems shall be MSA Ultima X Series or Sensidyne SensAlert.

2-2.01.01. Sensors. Sensors shall be of the remote mounted infrared or catalytic bead type contained in corrosion resistant weatherproof housings. Sensors shall be rated either intrinsically safe or explosion proof, and shall be suitable for the environment in which they will be located. Sensors shall not require any addition of chemical reagents and shall require no routine maintenance other than calibration checks. Combustible gas sensors shall not be adversely affected by exposure to hydrogen sulfide gases. Minimum sensor life shall be 5 years. A sufficient length of cable shall be provided for connecting the sensor to the alarm module enclosure, if required.

Sensors shall be products of the same manufacturer as the gas detector system.

2-2.01.02. Sampling Pumps. A compatible sampling pump of the same manufacturer as the gas detector system shall be installed to allow remote installation of gas detector sensors. The sampling pump system shall be installed with a suitable power supply. The sample pump unit shall be furnished with an explosion-proof hazardous area classification Class 1, Div. 1 enclosure. The sampling pump shall be equipped a flow detection relay. The sample line inlet shall be equipped with a filter to prevent obstruction of the sample line.

2-3.01.04. Spare Sensors. One spare sensor shall be provided for each sensor in the gas detector system. Spare sensors shall be provided in addition to any replacement sensors required during the warranty period, even if the warranty period exceeds the normal expected life of the sensor. Delivery schedule for the spare sensors shall be as recommended by the manufacturer and as coordinated with Owner.

PART 3 - EXECUTION

3-1. FIELD SERVICES. Manufacturer's field services shall be provided for installation, field calibration, startup, and training as specified in the Instrumentation and Control System section.

Instruments shall not be shipped to the Work Site until two weeks prior to the scheduled installation. System Supplier shall be responsible for coordinating the installation schedule with the Installation Contractor. Each shipment shall contain a listing of protective measures required to maintain sensor operation, including a listing of any common construction or cleaning chemicals that may affect instrument operation.

End of Section

Section 13566

MISCELLANEOUS INSTRUMENTS

PART 1 - GENERAL

1-1. SCOPE. This section covers the furnishing of all miscellaneous instruments and accessories required for the Instrumentation and Control System as specified herein or as indicated on the Drawings.

Equipment and services provided under this section shall be subject to the Instrumentation and Control System section. This section shall be used and referenced only in conjunction with the Instrumentation and Control System section. Supplementing the Instrumentation and Control System section, instrument data, special requirements, and options are indicated on the Drawings or the Instrument Device Schedule.

When multiple miscellaneous instruments of a particular type are indicated, and each requires different selectable features, the required features are described on the Drawings or in Instrument Device Schedule.

1-2. DESIGN CRITERIA. Each device shall be a pre-assembled, packaged unit. Upon delivery to the work site, each device or system shall be ready for installation with only minor piping and electrical connections required by System Supplier.

Primary elements shall derive any required power from the transmitter, unless otherwise indicated.

The instruments shall be installed to measure, monitor, or display the specified process at the ranges and service conditions indicated on the Drawings or as indicated in the Instrument Device Schedule. The instruments shall be installed at the locations indicated on the Drawings or the Instrument Device Schedule.

Where possible, each instrument shall be factory calibrated to the calibration ranges indicated in the Instrument Device Schedule. Transmitters or similar measurement instruments shall be calibrated using National Institute of Standards and Technology (NIST) approved bench calibration procedures, when such procedures exist for the instrument type. Calibration data shall be stored digitally in each device, including the instrument tag designation indicated on the Instrument Device Schedule.

1-3 SUBMITTALS. Submittals shall be made as specified in Instrumentation and Control System section.

1-4 SHIPMENT, PROTECTION, AND STORAGE. Equipment provided under this section shall be shipped, protected, and stored as specified in the Instrumentation and Control System section. Identification of packaging shall be as described in the Instrumentation and Control System section.

PART 2 - PRODUCTS

2-1. GENERAL. The following paragraphs provide minimum device stipulations. The Instrument Device Schedule shall be used to determine any additional instrument options, requirements, or service conditions.

2-1.01. Interconnecting Cable. For systems where the primary element and transmitter are physically separated, interconnecting cable from the element to the transmitter shall be provided. The cable shall be the type approved by the instrument manufacturer for the intended purpose of interfacing the element to the transmitter. Length of cable shall be a minimum of three meters or as indicated in the Instrument Device Schedule.

2-1.02. Programming Device. For instruments that require a dedicated programming device for calibration, maintenance, or troubleshooting, one such programming device shall be provided for each Owner facility (quantity required shall be as indicated in the Instrumentation and Control System section). The programming device shall include appropriate operation manuals and shall be included in the training requirements. For systems that allow the programming device functions to be implemented in software, running on a laptop computer, the software shall be provided instead of the programming device.

2-1.03. Configuration Software/Serial Interface. Devices indicated as requiring a serial interface shall be provided with all accessories required to properly communicate over the serial link. An appropriate cable shall be provided to allow the transmitter serial interface to be connected to a personal computer. One licensed copy of the diagnostic/interface software shall be provided for each Owner facility (quantity required shall be as indicated in the Instrumentation and Control System section). Software shall be capable of running under Microsoft's Windows 8.1 operating system. If the software furnished performs the same functions as the programming device, specified elsewhere, then the programming device shall not be furnished.

2-2. MISCELLANEOUS INSTRUMENTS.

2-2.01. Proximity (Door) Switches. Proximity switches shall be magnetic proximity type, consisting of two sensors. One sensor shall be fixed to the door and the other to the door frame. The sensor mounted to the door shall have no electrical connections. Switches shall be provided with DPDT contacts rated

5 amperes at 120 V ac. All necessary mounting hardware shall be provided to allow both the sensors to be installed at the locations indicated on the Drawings.

2-2.02. Instrument Shutoff Valves. Instrument shutoff valves shall be provided for instruments as indicated on the Drawings and as detailed in the specifications. The indicated shutoff valves shall be provided by System Supplier for all instruments furnished under the Pressure and Level Instruments section and Analytical Instruments section. Shutoff valves shall be compatible with the measured process and shall be selected in accordance with the manufacturer's recommendations for the specified process. Unused ports of multi-port gauge valves shall be plugged. An instrument shutoff valve schedule shall be submitted indicating the quantity, material, size, and associated instrument. Permanent tagging of the instrument valves is not required. However, temporary hand-written tags or other means of identification shall be provided to ensure that the appropriate valve is installed for a given instrument.

Instrument shutoff valves shall be D/A Manufacturing, Anderson-Greenwood, or equal.

PART 3 - EXECUTION

3-1. FIELD SERVICES. Manufacturer's field services shall be provided for installation, field calibration, startup, and training as specified in the Instrumentation and Control System section.

Instruments shall not be shipped to the Work Site until two weeks prior to the scheduled installation. The System Supplier shall be responsible for coordinating the installation schedule with the Installation Contractor. Each shipment shall contain a listing of protective measures required to maintain sensor operation, including a listing of any common construction or cleaning chemicals that may affect instrument operation.

End of Section

Section 13570

PANELS, CONSOLES, AND APPURTENANCES

PART 1 - GENERAL

1-1. SCOPE. The Panels, Consoles and Appurtenances section covers the furnishing of panels, consoles, and appurtenances as indicated on the Drawings and listed in the attached Equipment Schedules 13570-S01.

This section also describes requirements for panels furnished under other sections whose respective specification refers to this section. Panels furnished under other sections are not listed in the attached Equipment Schedules.

1-1.01. Control System. The Instrumentation and Control System section shall apply to all equipment furnished under the Panels, Consoles and Appurtenances section.

1-2. GENERAL. Equipment furnished and installed under this section shall be fabricated and assembled in full conformity with the Drawings, specifications, equipment schedules, engineering data, instructions, and recommendations of the equipment manufacturer, unless exceptions are noted by Engineer.

1-2.01. General Equipment Stipulations. The General Equipment Stipulations shall apply to all equipment and materials provided under this section. If requirements in this specification differ from those in the General Equipment Stipulations, the requirements specified herein shall take precedence.

1-2.02. Seismic Design Requirements. Seismic design requirements for products specified herein shall be as indicated in the Meteorological and Seismic Design Criteria section.

1-2.03. Drawings. General dimensions and arrangements are indicated on the Drawings and on the attached equipment schedules. System Supplier shall be responsible for coordinating the console and enclosure sizes and arrangements to accommodate the equipment provided.

1-3. SUBMITTALS. Submittals shall be made as specified in the Instrumentation and Control System section.

Submit confirmation of compliance with the requirements of the Meteorological and Seismic Design Criteria section.

1-4. DELIVERY, STORAGE, AND SHIPPING. Delivery, storage and shipping shall be as per The Instrumentation and Control System section.

PART 2 - PRODUCTS.

2-1. PANEL DESIGN AND FABRICATION FEATURES. All panels furnished shall conform to the stipulations of NEMA ICS-6-1993 (R2001, R2006). Unless indicated otherwise on the Drawings, the following paragraphs describe general fabrication specifications for the PLC cabinets, instrument panels, consoles, enclosures, and subpanels.

2-1.01. Piping. Pneumatic tubing shall be 1/4-inch OD, soft annealed copper with compression fittings. Tubing and fittings shall be as specified in the Miscellaneous Piping section.

2-1.01.01. Fittings. Compression type bulkhead fittings shall be provided near the bottom or the top of the panel for all field connections. Compression nuts and sleeves shall be provided for the field connections. Indicators, recorders, controllers, and other pneumatic devices shall be provided with plugged test connections and shutoff valves for isolation.

2-1.01.02. Valves. All devices shall have separate air supply shutoff valves. Valves and compression fittings shall be as manufactured by Nupro, Parker Hannifin, Swagelock, Tylok, or Whitey.

2-1.02. Power Entrance. The power entrance to each panel shall be provided with a surge protection device. Refer to the Instrumentation and Controls section for surge suppression requirements.

2-1.03. Power Wiring. Power distribution wiring on the line side of panel fuses shall be minimum 12 AWG. Secondary power distribution wiring shall be minimum 14 AWG. Wiring for ac power distribution, dc power distribution, intrinsically safe, and control circuits shall have different colors and shall agree with the color-coding legend on System Supplier's panel wiring diagrams. With the exception of electronic circuits, all interconnecting wiring and wiring to terminals for external connection shall be stranded copper, insulated for not less than 600 volts, with a moisture resistant and flame retardant covering rated for not less than 90°C.

2-1.04. Instrument and Control Wiring. All internal panel wiring shall be type MTW stranded copper wiring rated not less than 600 volts. Electronic analog circuits shall be twisted and shielded pairs rated not less than 300 volts. Analog circuits shall be separated from ac power circuits. Intrinsically safe circuits shall be physically separated from other circuits in accordance with applicable codes.

Wires within the panel shall conform to the minimum size as shown in the table below.

Type	Min. Wire Size	Color
AC Control	14 AWG	Red
DC Control	14 AWG	Blue
Analog Circuits	16 AWG Twisted Pair	Black/White

All wiring shall be grouped or cabled and firmly supported inside the panel. Each individual wire in power, control, and instrumentation circuits shall be provided with identification markers at each point of termination. The wire markers shall be positioned to be readily visible for inspection and the identification numbers shall match the identification on the supplier's panel wiring drawings. Wiring shall be bundled in groups and bound with nylon cable ties or routed in Panduit or similar nonmetallic slotted ducts. Ducts shall be readily accessible within the panel, with removable covers, and with space equal to at least 40 percent of the depth of the duct remaining available for future use after completion of installation and field wiring. Sufficient space shall be provided between cable groups or ducts and terminal blocks for easy installation or removal of cables.

2-1.05. Terminal Blocks. Terminal blocks for external connections shall be suitable for 12 AWG wire and shall be rated 30 amperes at not less than 300 volts. Terminal blocks shall be fabricated complete with marking strip, covers, and pressure connectors. Terminals shall be labeled to agree with identification shown on the supplier's submittal drawings. A terminal shall be provided for each conductor of external circuits, plus one ground for each shielded cable. Not less than 8 inches of clearance shall be provided between the terminal strips and the base of vertical panels for conduit and wiring space. Not less than 25 percent spare terminals shall be provided. Each control loop or system shall be individually fused, and all fuses or circuit breakers shall be clearly labeled and located for easy maintenance.

2-1.06. Backup Power. Power supply to the panels shall be from an electrical utility source and backed by an engine generator and a Data Flow Systems (DFS) furnished remote terminal unit (RTU) battery, specified in other sections.

The referring equipment specifications RTU cabinet shall each be provided with an interior-mounted battery to provide backup power to critical loads upon loss of power supply to the panel. Power shall be provided to the RTU CPU, I/O modules (operating and wetting voltages), the radio and any other load essential to preventing loss of control system function. Backup power for panel interior lights, heaters, and convenience receptacles is not required.

2-1.07. Device Tag Numbering System. All devices shall be provided with permanent identification tags. The tag numbers shall agree with the Instrument

Device Schedule and with the supplier's equipment drawings. All field-mounted transmitters and devices shall have stamped stainless steel identification tags. Panel, subpanel, and rack-mounted devices shall have laminated phenolic identification tags securely fastened to the device. Hand-lettered labels or tape labels will not be permitted.

2-1.08. Nameplates. Nameplates shall be provided on the face of the panel or on the individual device. Panel nameplates shall have legends and approximate dimensions as indicated on the Drawings and shall be made of laminated phenolic material having engraved letters approximately 3/16 inch high extending through the black face into the white layer. Nameplates shall be secured firmly to the panel. Panel face nameplates do not replace the requirement for device identification tags as specified under the Device Tag Numbering System paragraph.

2-1.09. Indicating Light Color Designations. Indicating lights shall be colored as shown in the following table unless indicated otherwise on the Drawings, in other specification sections, or in the instrument device schedule.

Color	Meaning
Red	Associated equipment or device is “running”, “open”, or is in an “unsafe” state or position
Green	Associated equipment or device is “stopped”, “closed”, or is in a “safe” state or position
Yellow or Amber	Associated equipment or device has “failed” or a process alarm condition is present or imminent.
White	All other conditions not defined above.

2-1.10. Painting. Interior and exterior surfaces of all carbon-steel panels shall be thoroughly cleaned and painted with rust inhibitive (universal) primer. The panel interior shall be painted white with the manufacturer's standard coating. All pits and blemishes in the exterior surface shall be filled. Exterior surfaces shall be painted with one or more finish coats of the manufacturer's standard coating. Finish coats shall have a dry film thickness of at least 4 mils. Color shall be ANSI 61 Gray. One quart of touch-up paint shall be furnished with the panels.

2-1.11. Panel-Mounted Instruments. Instruments, power supplies, pilot devices, and appurtenances mounted within or on the face of the panel shall meet the requirements specified in Section 13561, Panel Mounted Instruments, for those items unless noted otherwise herein, on the Drawings or, if applicable, within the referring equipment specification section.

2-1.12. Factory Test. Panels shall be factory tested electrically and pneumatically by the panel fabricator before shipment.

2-2. FREESTANDING VERTICAL PANELS. The following paragraphs specify the freestanding vertical panels:

2-2.01. Construction. Panel construction shall be an indoor, dust-tight, completely enclosed cubicle formed from steel structural members and steel plates. The base shall be formed of steel channels, with flanges extending upwards. The base shall be provided with 1/2 inch diameter holes at 12 inch centers so that the base can be bolted to the concrete equipment base. Welds, seams, and edges on all exposed surfaces shall be ground smooth. Suitable lifting facilities shall be provided for handling and shipment. Panels shall meet the NEMA enclosure rating as indicated in the attached equipment schedules or the referring equipment specification section

2-2.02. Structure. Panel structure shall be suitably braced and of sufficient strength to support all equipment mounted on or within, to withstand handling and shipment, to remain in proper alignment, and to be rigid and freestanding. Top, sides, and back shall be fabricated from USS 10 gage or heavier carbon steel sheets, with stationary back suitable for back to wall installation, or designed for rear access with hinged back doors. Doors shall not be greater than 24 inches wide or spaced not greater than 36 inches center to center. Rear access doors shall be fabricated from USS 14 gage or heavier carbon steel.

2-2.03. Panel Front. The front shall be a hinged door, or doors, with mounted instruments and control devices, fabricated from USS 10 gage carbon steel sheet and suitably braced and supported to maintain alignment. Panels with hinged fronts shall be of sufficient width to permit door opening without interference with rear projection of flush mounted instruments.

2-2.04. Doors. Doors shall be essentially full height, having turned back edges and additional bracing to ensure rigidity and prevent sagging. Doors shall be mounted with strong, continuous, piano type hinges. Positive latches, acting from a common door handle, shall hold doors securely compressed at top, side, and bottom against rubber gaskets.

2-2.05. Mounted Instruments and Equipment. Panel-mounted instruments and equipment shall be installed on a subpanel constructed from 1/8 inch thick carbon steel and shall be reinforced and braced to form a rigid assembly. The subpanel shall be suitably reinforced between mounting cutouts and drilling to support instruments and devices without deformation and shall be free from waves and other imperfections. Subpanels shall be installed with a minimum 3 inch clearance from the enclosure front panel to provide adequate room for

instrument and equipment protrusion from the subpanel and to not impede door latching. Adjoining panel sections shall be accurately shop fitted to assure satisfactory assembly in the field.

2-2.05.01. Instrument Arrangement. Panel instruments and control devices shall be arranged in a logical configuration for the plant operators. The centerline of recorders shall be within 3 feet and 5'-9" above the base of the panel for convenient reading and chart replacement. Control switches shall be within 6 feet and 2'-6" above the base of the panel. Indicators may be located within 2'-6" and 6'-6" above the base of the panels. Annunciators and clocks may be mounted near the top of the panels.

2-2.06. Conduit Entrance. The bottom shall be open, and components shall be arranged for external wiring conduit and piping to enter from below.

2-2.07. Size and Arrangement. Not used.

2-2.08. Interior Lighting. Illumination of panel interiors shall be provided by ceiling mounted lamp fixtures spaced at approximately 2'-6" and near the door. Fixtures shall be nominal 40-watt fluorescent tube type, with a common "On-Off" switch near each end door. Duplex-grounded receptacles shall be provided for service and maintenance tools at spacing not greater than 5 feet throughout the length of a panel. The lighting and receptacle circuit shall be fused separately from the instrumentation systems.

Floor stands shall be provided to support cabinets not fastened to a handrail, wall or other support. Floor stands shall be full-depth and shall have a minimum height of 12 inches. Floor stand material and finish shall match the cabinet.

All wall-mounted cabinets shall meet the requirements of the panel fabrication paragraph of this section.

Outdoor cabinets shall be provided with sunshades as indicated on the Drawings or, if applicable, in the attached equipment schedules or the referring equipment specification section.

PART 3 - EXECUTION

3-1. GENERAL INSTALLATION REQUIREMENTS. Installation requirements are specified in the Instrumentation and Control System section. In addition, equipment furnished under this section shall conform to the following manufacturing stipulations.

3-1.01. Piping. All tubing shall be run in horizontal and vertical planes and shall be rigidly supported to withstand handling and shipment. Flexible polyethylene tubing shall be used to connect devices mounted on hinged doors.

3-1.02. Wiring. All wiring shall be grouped or cabled and firmly supported inside the panel. Wiring shall be bundled in groups and routed in Panduit or similar nonmetallic slotted ducts. Ducts shall be readily accessible within the panel with removable covers and shall have a space of at least 40 percent of the depth of the duct available for future use after installation is complete and all field wiring installed. Sufficient space shall be provided between cable groups or ducts and terminal blocks for easy installation or removal of cables.

3-1.03. More Than One Panel. Where signal or loop wiring must be routed to more than one panel or device, the required circuit routing shall be as indicated on the one-line diagrams. The panel fabricator shall provide such additional circuits as may be indicated on the electrical schematic Drawings.

End of Section

Equipment Schedule 13570-S01

FREESTANDING VERTICAL PANELS

1.000	**General**		
1.010	Specification Section 13570		
2.000	**Freestanding Vertical Panels**		
2.010	Panel ID	CP-07 Pump Control Panel	
2.020	NEMA Enclosure Rating		
	12		
	4		
	4X	X	
2.030	Materials of construction		
	Carbon steel	X	
	316 Stainless steel		
	Fiberglass polyester		
2.040	Environmental provisions		
	Sunshade and drip shield		
	Cooling fan	X	
	Air conditioner	X	
2.050	Door Arrangements		
	Hinged rear doors		
	Hinged front door with instruments		
	Hinged front door without instruments	X	
	Fixed front		
	Recessed base		
2.060	Dimensions (min. L x W x H)		
2.070	Panel interior-mounted UPS		
2.080	Conduit entrance		
	Bottom open	X	
	Removable top plates		
3.000	**Exceptions, Clarifications, and Comments**		
3.010	None		

Equipment Schedule 13570-S02

WALL-MOUNTED CABINETS

1.000	**General**			
1.010	Specification Section 13570			
2.000	**Wall Mounted Cabinets**			
2.010	Panel ID	Combustible Gas Detection (CGD) Controller Panel (AIT-02)	Hazardous Gas Sampling System Panel (AE-02)	
2.020	NEMA Enclosure Rating			
	12			
	3R			
	4			
	4X	X	X	
2.030	Materials of construction			
	Carbon steel			
	316 Stainless steel	X	X	
	Fiberglass polyester			
2.040	Environmental provisions			
	Sun shade			
	Cooling fan			
	Air conditioner			
2.050	Dimensions (min. L x W x H)			
3.000	**Exceptions, Clarifications, and Comments**			
3.010	None			

Section 15010

VALVE INSTALLATION

PART 1 - GENERAL

1-1. SCOPE. This section covers the installation of new valves and actuators purchased by Contractor as part of this Work.

Cleaning, disinfection, pressure and leakage testing, insulation, and pipe supports are covered in other sections .

The following specification sections are applicable to valves to be installed:

Title
Check Valves
Eccentric Plug Valves
Air Valves

1-2. GENERAL. Equipment installed under this section shall be erected and placed in proper operating condition in full conformity with Drawings, Specifications, engineering data, instructions, and recommendations of the equipment manufacturer, unless exceptions are noted by Engineer.

1-2.01. Coordination. When manufacturer's field services or installation check services are provided by the valve manufacturer, Contractor shall coordinate the services with the valve manufacturer. Contractor shall give Engineer written notice at least 30 days prior to the need for manufacturer's field services.

Flanged connections to valves including the bolts, nuts, and gaskets are covered in the appropriate pipe specification section. Valve ends shall match piping.

PART 2 - PRODUCTS Not Applicable.

PART 3 - EXECUTION

3-1. INSPECTION. All valves and accessories shall be inspected for damage and cleanliness before being installed. Any material damaged or contaminated in handling on the job shall not be used unless it is repaired and re-cleaned to the original requirements by Contractor. Such material shall be segregated from the clean material and shall be inspected and approved by Owner or his representative before its use.

3-2. INSTALLATION.

3-2.01. General. Valves shall be installed with sufficient clearance for proper operation of any external mechanisms, and with sufficient clearance to dismantle the valve for in-place maintenance. Installation shall be in accordance with the valve manufacturer's recommendations.

Unless otherwise indicated on the Drawings or specified, all valves installed in horizontal runs of pipe having centerline elevations 4 feet 6 inches or less above the finish floor shall be installed with their operating stems vertical. Valves installed in horizontal runs of piping having centerline elevations between 4 feet 6 inches and 6 feet 9 inches above the finish floor shall be installed with their operating stems horizontal. If adjacent piping prohibits this, the stems and operating handwheel shall be installed above the valve horizontal centerline as close to horizontal as possible. Valves installed in vertical runs of pipe shall have their operating stems oriented to facilitate the most practicable operation, as reviewed by Engineer.

3-2.02. Installation Checks. When specified in the valve sections, the valve manufacturer will provide installation checks. For installation checks, the manufacturer's field representative will inspect the valve installation immediately following installation by Contractor. The manufacturer's representatives will revisit the site as often as necessary to ensure installation satisfactory to Owner.

3-2.03. AWWA Butterfly Valves. Not used.

3-2.04. Check Valves.

3-2.04.01. Lift Check Valves. Horizontal lift checks shall be installed in a level horizontal position so that the internal parts rise and fall vertically, unless the valve is spring loaded. Angle pattern lift checks shall be installed in vertical pipe with flow upward from beneath the disc.

3-2.04.02. Swing Check Valves. Install valves oriented for the correct flow direction. Only valves designed for vertical installation shall be installed in vertical piping.

3-2.04.03. Low Pressure Air Service Check Valves. Dual disc wafer check valves installed in the discharge piping of centrifugal blowers shall be positioned with the valve hinge perpendicular to the impeller shaft of the blower.

3-2.05. Plug Valves.

3-2.05.01. Eccentric Plug Valves. Eccentric plug valves shall be installed with the shaft horizontal and the plug in the upper half of the valve body. Valves in horizontal wastewater, sludge, or scum lines shall be installed with the seat on the upstream end. Valves in all vertical piping shall be installed with the seat at the upper end of the valve.

3-2.05.02. Plug Valves. Not used.

3-2.06. Resilient Seated Gate Valves. Not used.

3-2.06.01. Resilient Seated Gate Valves. Not used.

3-2.06.02. Double Disc Gate Valves. Not used.

3-2.07. Air Release and Combination Air Valves. The exhaust from each valve shall be piped to a suitable point acceptable to Engineer. Air release valve exhaust piping leading to a trapped floor drain shall terminate at least 6 inches above the floor.

3-2.08. Hydrants. Not used.

3-2.08.01. Yard Hydrants. Not used.

3-2.08.02. Fire Hydrants. Not used.

3-2.09. Valve Boxes. Valve boxes shall be set plumb. Each valve box shall be placed directly over the valve it serves, with the top of the box brought flush with the finished grade. After each valve box is placed in proper position, earth fill shall be placed and thoroughly tamped around the box.

3-3. VALVE ACTUATORS. Valve actuators and accessories shall be factory mounted on the valve, calibrated, and tested by the valve or actuator manufacturer.

3-4. FIELD QUALITY CONTROL.

3.4.01. Field Testing. After installation, all valves shall be tested in accordance with the Pipeline Pressure and Leakage Testing section.

3-4.01.01. Pressure Tests. Pressure testing shall be in accordance with the Pipeline Pressure and Leakage Testing section.

3-4.01.02. Leakage Tests. All valves shall be free from leaks. Each leak that is discovered within the correction period stipulated in the General Conditions shall be repaired by and at the expense of Contractor. This requirement applies whether pressure testing is required or not.

3-5. ADJUSTING. After installation, the opening and closing time shall be adjusted as needed for each pneumatic, hydraulic and electric actuated valve.

End of Section

Section 15093

CHECK VALVES

PART 1 - GENERAL

1-1. SCOPE. This section covers the furnishing of check valves as specified herein.

Tag Number	Size	Type of Valve	Service	Design Capacity	Ends(1)	P&ID DWG No.
	(in)			(gpm or *SCFM**)		
VCK-011	16	VC-10	Plant Drain FM	4930	F	I-101
VCK-021	16	VC-10	Plant Drain FM	4930	F	I-101
VCK-9101	1.25	VC-2	Water	45	F	I-101
1. F = Flanged						

Piping, pipe supports, insulation, and accessories that are not an integral part of the valves or are not specified herein are covered in other sections.

1-2. GENERAL. Equipment furnished under this section shall be fabricated and assembled in full conformity with Drawings, Specifications, engineering data, instructions, and recommendations of the equipment manufacturer unless exceptions are noted by Engineer.

Valves shall be furnished with all necessary parts and accessories indicated on the Drawings, specified, otherwise required for a complete, properly operating installation and shall be the latest standard products of a manufacturer regularly engaged in the production of valves.

1-2.01. General Equipment Stipulations. The General Equipment Stipulations shall apply to all equipment furnished under this section. If requirements in this specification differ from those in the General Equipment Stipulations, the requirements specified herein shall take precedence.

1-2.02. Temporary Number Plates. Not used.

1-2.03. Identification. Valves specified herein shall be tagged in accordance with the Equipment and Valve Identification section.

1-3. SUBMITTALS. Complete drawings, details, and specifications covering the valves and their appurtenances shall be submitted in accordance with the Submittals Procedures section. Included in the submittal shall be drawings by the valve manufacturer to indicate the position of the valve actuator and valve shaft.

PART 2 – PRODUCTS

2-1. CONSTRUCTION.

2-1.01. Valves VC-1. Not used.

2-1.02. Valves VC-2.

VC-2	Rating	Class 125
	Code	AWWA C508
Water, sludge, liquid service, or sump pump discharge	Type	Horizontal swing, threaded bonnet
	Body/Bonnet	
	Trim	ASTM B62 bronze
	Seat	Bronze, regrinding
	Disc	Bronze
	Hinge Pins	Manufacturer's standard
Threaded ends	End Connection	Threaded
	Temp. Limitations	-20 to 212°F
	Manufacturers	Stockham "B-321", Walworth "Fig 3406"
2 inch or smaller pipe		

2-1.03. Valves VC-3. Not used.

2-1.04. Valves VC-4. Not used.

2-1.05. Valves VC-5. Not used.

2-1.06. Valves VC-6. Not used.

2-1.07. Valves VC-7. Not used.

2-1.08. Valves VC-8. Not used.

2-1.09. Valves VC-9. Not used.

2-1.10. Valves VC-10.

VC -10 Wastewater pump discharge service 6 inch and larger pipe	Rating Code Type Body Trim Seat Ring Disc Hinge Pins Bearings Cover Gasket End Connection Temp. Limitations Valve Operator Manufacturers	Class 125 AWWA C508 Horizontal swing, bolted bonnet ASTM A126 Class B cast iron ASTM B763 Alloy 84400 bronze ASTM A126 Class B cast iron Stainless steel Bronze bushings Manufacturer's standard Flanged, ASME B16.1, Class 125, flat faced -20 to 212°F External spring or weighted lever American Flow Control "52 SC", M&H "Style 259-02", Mueller "A2600-6-01 or 6-02"

2-1.11. Valves VC-11. Not used.

2-1.12. Valves VC-12. Not used.

2-1.13. Valves VC-13. Not used.

2-1.14. Valves VC-14. Not used.

2-1.15. Valves VC-15. Not used.

2-1.16. Valves VC-16. Not used.

2-1.17. Valves VC-17. Not used.

2-1.18. Valves VC-18. Not used.

2-1.19. Valves VC-19. Not used.

2-1.20. Shop Coatings. All ferrous metal surfaces of valves and accessories, both interior and exterior, shall be shop coated for corrosion protection. The valve manufacturer's standard coating will be acceptable, provided it is functionally equivalent to the specified coating.

Coating Materials

Epoxy Enamel (for liquid service)	Ameron "Amerlock 400 High-Solids Epoxy Coating", Carboline

	"Carboguard°891", or Tnemec "Series N140 Pota-Pox Plus".
Rust-Preventive Compound	As recommended by the manufacturer.

Surfaces To Be Coated

Unfinished Surfaces

Interior Surfaces

Liquid Service	Epoxy enamel.
Exterior Surfaces of Valves To Be Buried, Submerged, or Installed in Manholes or Valve Vaults	Asphalt varnish or coal tar epoxy.
Exterior Surfaces of All Other Valves	Universal primer.
Polished or Machined Surfaces	Rust-preventive compound.
Actuators and Accessories	Universal primer.

PART 3 - EXECUTION

3-1. INSTALLATION. Materials furnished under this section shall be installed in accordance with Valve Installation section.

End of Section

Section 15102

ECCENTRIC PLUG VALVES

PART 1 - GENERAL

1-1. SCOPE. This section covers furnishing all eccentric plug valves as required by the Work. Plug valves shall be furnished complete with actuators and accessories as specified herein and as specified in the Valve and Gate Actuators section.

Tag Number	Size (in)	Rated Working Pressure (psi)	Application	Ends(1)	High Pressure Side of Plug(2)	Type of Manual Actuator(3)	Extensions Stems	Operating Stands	P & I DWG No.
VPE-012	16	150	Pump Isolation	F	U	WN	No	No	I-101
VPE-022	16	150	Pump Isolation	F	U	WN	No	No	I-101

1. F = Flanged
2. U = Seat on Upstream End
3. WN = Wrench Nut

1-2. GENERAL. Equipment provided under this section shall be fabricated and assembled in full conformity with Drawings, Specifications, engineering data, instructions, and recommendations of the equipment manufacturer, unless exceptions are noted by Engineer.

Valves shall be furnished with all necessary parts and accessories indicated on the Drawings, specified, or otherwise required for a complete, properly operating installation and shall be the latest standard products of a manufacturer regularly engaged in the production of valves.

1-2.01. General Equipment Stipulations. The General Equipment Stipulations shall apply to all equipment and materials furnished under this section. If the requirements in this section are different from those in the General Equipment Stipulations, the requirements in the section shall take precedence.

1.2.02. Governing Standard. Except as modified or supplemented herein, all eccentric plug valves and manual actuators shall conform to the applicable requirements of ANSI/AWWA C517.

1-2.03. Marking. Each valve shall be marked with the manufacturer's name, valve size, and pressure rating, and the country of origin of the body casting. All markings shall be cast on the exterior surface of the valve body. An identifying

serial number shall be stamped on a corrosion-resistant plate attached to the valve body.

1-2.04. Temporary Number Plates. Not used.

1-2.05. Identification. Eccentric plug valves shall be identified in accordance with the Equipment and Valve Identification section.

1-3. SUBMITTALS. Complete drawings, details, and specifications covering the valves and their appurtenances shall be submitted in accordance with the Submittals Procedures section.

Certified copies of test reports for tests described in Section 5. of governing standard, with an affidavit of compliance as indicated in Section 6.3 of governing standard, shall be submitted to Engineer before the valves are shipped.

PART 2 - PRODUCTS

2-1. ACCEPTABLE PRODUCTS. Eccentric plug valves furnished under this section shall be manufactured by DeZurik, Pratt, Milliken, Val-Matic, Clow, or Victaulic, or approved equal.

2-2. MATERIALS. Materials used in the manufacture of eccentric plug valves shall be as indicated:

Body	Cast iron, ASTM A126, Class B; or ductile iron, ASTM A536, Grade 65-45-12.
Plug	Cast iron, ASTM A126, Class B; or ductile iron, ASTM A536, Grade 65-45-12.
Plug Facing	Chloroprene, Neoprene or Buna-N, 70 Type A durometer hardness in accordance with ASTM D2240.
Body Seat	Welded nickel overlay.
Upper and Lower Trunnion Bearings	Sleeve type; stainless steel or bronze.
Upper Thrust Bearing	TFE, Nylatron, or Delrin.
Stem Seal	V-type packing or U-cups, Buna-N or TFE.

The following are acceptable shop coatings.

Coal Tar Epoxy	High-build coal tar epoxy; PPG Amercoat "Amercoat 78HB Coal Tar Epoxy", Carboline "Bitumastic 300 M", Tnemec "46H-413 Hi-Build Tneme-Tar", or Sherwin-Williams "Hi-Mil Sher-Tar Epoxy".
Epoxy	
For Gas Service	PPG Amercoat “Amercoat 385 Epoxy”, Carboline “Carboguard 890”, Tnemec “Series N69 Hi-Build Epoxoline II”, Sherwin-Williams "Macropoxy 646" or Carboline “Plasite 7122”.
For Liquid Service other than in potable water facilities	PPG Amercoat “Amercoat 385 Epoxy”, Carboline “Carboguard 890”, Sherwin-Williams "Macropoxy 646".or Tnemec “Series N69 Hi-Build Epoxoline II”.

2-3. VALVE CONSTRUCTION.

2-3.01. Valve Body. The valve port area of each valve shall be at least 80 percent of the cross section of the connecting piping for 20 inch and smaller valves and 70 percent for 24 inch and larger valves. Valves shall provide tight shutoff at the rated pressure from either direction. An adjustable closed position plug stop shall be provided.

Each valve body shall be plainly marked to indicate the seat end. The actual length of 10 inch and smaller valves shall be within plus or minus 1/16 inch of the theoretical length. The actual length of 12 inch and larger valves shall be within plus or minus 1/8 inch of the theoretical length.

Valve ends shall be compatible with connecting piping. All valves shall have flanged, grooved or mechanical joint ends as indicated on the Drawings. Flange diameter and drilling shall conform to ANSI B16.1, Class 125. Flanges shall be flat faced and finished to true plane surfaces within a tolerance limit of 0.005 inch. The finished face shall be normal to the longitudinal valve axis within a maximum angular variation tolerance of 0.002 inch per foot of flange diameter. Grooved end dimensions shall conform to ANSI/AWWA C606, Table 5, for rigid joints. When grooved end valves are to be installed in flanged piping, two flange adapters compatible with the connecting piping shall be provided with each valve. Mechanical joint ends shall conform to ANSI/AWWA C111/A21.11.

2-3.02. Plug. The plug shall be of one-piece construction and shall have a cylindrical or spherical seating surface eccentrically offset from the center of the plug shaft. The interference between the plug face and the body seat, with the plug in the closed position, shall be externally adjustable in the field with the valve in the line under pressure. Plug surfaces shall be faced with a resilient material.

2-3.03. Seats. Seats shall be cast in the body and shall have raised, welded-in nickel overlay not less than 0.050 inch thick on all surfaces in contact with the plug face. The overlay shall be at least 90 percent nickel and have a Brinell hardness of 200 or greater.

2-3.04. Stem Seals. The valve shaft shall be sealed by U-cups or by at least four self-adjusting chevron type packing rings.

2-3.05. Working Pressure. Valves shall be rated for a minimum working pressure as specified below, except where otherwise indicated on the Drawings.

Size in inches	Pressure Rating in psi
3 to 12	175
14 to 72	150

2-4. VALVE ACTUATORS. Requirements for valve actuators shall be as specified herein and as specified in the Valve and Gate Actuators section.

Geared actuators shall be used for manually operated valves in the following applications:

a. For all 4 inch and larger buried valves.

b. For all 8 inch and larger valves.

c. For all 6 inch and larger valves in throttling or free discharge applications.

d. For all 6 inch and larger valves where the unseating pressure exceeds 25 psi .

e. For all chainwheel operated valves.

f. For all valves in gas service.

Geared actuators for plug valves unless otherwise specified shall be rated for a differential pressure across the valve, on the seating side, of 100 psi for 6 inch to 8 inch valves, 50 psi for 10 inch and larger valves, and 25 psi for gas service valves and a maximum flow of 8 ft/s .

2-5. SHOP PAINTING. All interior and exterior ferrous metal surfaces, except bearing and finished surfaces and stainless steel components of valves and accessories, shall be shop painted for corrosion protection. The valve manufacturer's standard coating will be acceptable, provided it is functionally equivalent to the specified coating and is compatible with the specified field painting.

Surfaces shall be painted as follows:

Unfinished Surfaces	
Interior Surfaces	
For Liquid Service	Epoxy.
For Gas Service	Epoxy.
Exterior Surfaces of Valves to be Buried, Submerged, or Installed in Manholes or Valve Vaults	Coal tar epoxyEpoxy.
Exterior Surfaces of All Other Valves	Universal primer.
Polished or Machined Surfaces	Rust-preventive compound.

Interior epoxy coatings shall comply with ANSI/AWWA C550 and shall be free of holidays.

The total dry film thickness of shop-applied coatings shall be not less than:

Type of Coating	Minimum Dry Film Thickness
Coal Tar Epoxy	15 mils
Epoxy	10 mils
Universal Primer	3 mils

2-6. ACCESSORIES. Requirements for extension stems and stem guides, position indicators, floor boxes, operating stands, and valve boxes shall be as indicated on the Drawings and as specified in the Valve and Gate Actuators section.

2-7. TESTING. Except as modified herein, eccentric plug valves shall be tested in accordance with Section 5 of the governing standard. Each valve shall be performance tested in accordance with Section 5.2 of the governing standard. The leakage test shall be applied to the seating face of the plug (tending to unseat the plug) at the rated pressure of the valve.

Each valve shall be leaktight in both directions when closed by the actuator with the maximum differential pressure applied to the plug as specified herein.

PART 3 - EXECUTION

3-1. INSTALLATION. Valves shall be installed in accordance with Valve Installation section.

3-1.01. Installation Check. An installation check by an authorize representative of the manufacturer is not required.

End of Section

Section 15108

AIR VALVES

PART 1 - GENERAL

1-1. SCOPE. This section covers furnishing air-release valves as required by the Work.

Tag Number	Type(1)	Inlet size	Orifice Size	Inlet Type(2)	Outlet Type(3)	Working Pressure	Drawing No.
		(in)	(in)			(psi)	
ARVR-013	ARVR	2	1 ¾	T	T	10	I-101
ARVR-023	ARVR	2	1 ¾	T	T	10	I-101

1. ARVR = Air Release and Vacuum Relief Valve
2. Threaded Male & Female NPT
3. Threaded Male & Female NPT

1-2. GENERAL. Equipment provided under this section shall be fabricated and assembled in full conformity with the Drawings, Specifications, engineering data, instructions, and recommendations of the equipment manufacturer, unless exceptions are noted by Engineer.

Valves shall be furnished with all necessary parts and accessories indicated on the Drawings, specified, or otherwise required for a complete, properly operating installation and shall be the latest standard products of a manufacturer regularly engaged in the production of valves.

1-2.01. General Equipment Stipulations. The General Equipment Stipulations shall apply to all equipment furnished under this section. If requirements in this specification differ from those in the General Equipment Stipulations, the requirements specified herein shall take precedence.

1-2.02. Governing Standard. Except as modified or supplemented herein, all valves furnished under this section shall conform to the applicable performance requirements of ANSI/AWWA C512.

1-2.03. Identification. Air valves shall be tagged in accordance with the Equipment and Valve Identification section.

1-3. SUBMITTALS. Complete assembly drawings, together with detailed specifications and data covering materials used and accessories forming a part of the valves furnished, shall be submitted in accordance with the Submittals Procedures section.

PART 2 - PRODUCTS

2-1. ACCEPTABLE PRODUCTS. Air release valves for wastewater applications with operating pressures of 300 psi or less shall be BERMAD without exception.

2-2. MATERIALS. Except as modified or supplemented herein, materials of construction shall comply with the governing standard.

Body Material	Glass Reinforced Nylon.
Float	Polypropylene.
Shop Coatings	Not used.

2-3. SHOP PAINTING. Not used.

2-4. SHUTOFF VALVES. A shutoff valve shall be provided in the piping leading to each air valve. Shutoff valves 2 inches and smaller shall be threaded end, ball valves. Ball valve material shall be compatible with the application. Shutoff valves 3 inches and larger for clean water service shall be butterfly valves as specified in the AWWA Butterfly Valve section. Shutoff valves 3 inches and larger for wastewater service shall be eccentric plug valves as specified in the Eccentric Plug Valve section.

Each 4 inch and larger combination air valve shall be provided with a shutoff valve between the air and vacuum valve and the air release valve.

PART 3 - EXECUTION

3-1. INSTALLATION. Air release valves shall be installed in accordance with the Valve Installation section.

End of Section

Section 15180

VALVE AND GATE ACTUATORS

PART 1 - GENERAL

1-1. SCOPE. This section covers furnishing manual and powered valve and gate actuators and accessories as specified herein.

1-2. GENERAL. Equipment provided under this section shall be fabricated and assembled in full conformity with Drawings, specifications, engineering data, instructions, and recommendations of the equipment manufacturer, unless exceptions are noted by Engineer.

Actuators shall be furnished with all necessary parts and accessories indicated on the Drawings, specified, or otherwise required for a complete, properly operating installation and shall be the latest standard products of a manufacturer regularly engaged in the production of actuators.

1-2.01. General Equipment Stipulations. The General Equipment Stipulations shall apply to all equipment furnished under this section. If requirements in this specification differ from those in the General Equipment Stipulations, the requirements specified herein shall take precedence.

1-2.02. Governing Standards. Except as modified or supplemented herein, cylinder and vane type actuators shall conform to applicable requirements of ANSI/AWWA C541.

Except as modified or supplemented herein, electric motor actuators shall conform to applicable requirements of ANSI/AWWA C542.

Except as modified or supplemented herein, actuators for butterfly and eccentric plug valves shall conform to the applicable requirements of ANSI/AWWA C504.

Except as modified or supplemented herein, manual actuators for ball valves shall conform to the applicable requirements of ANSI/AWWA C507.

Except as modified or supplemented herein, actuators for cast-iron slide gates shall conform to the applicable requirements of ANSI/AWWA C560.

Except as modified or supplemented herein, actuators for open channel slide gates and weir gates shall conform to the applicable requirements of ANSI/AWWA C513.

Except as modified or supplemented herein, actuators for stainless steel slide gates shall conform to the applicable requirements of ANSI/AWWA C561.

Except as modified or supplemented herein, actuators for composite slide gates shall conform to the applicable requirements of ANSI/AWWA C563.

1-2.03. Power Supply. Not used.

1-2.04. Marking. Each actuator shall be marked with the manufacturer's name, model number, and the country of origin. An identifying serial number shall be stamped on a corrosion-resistant plate attached to the actuator.

1-2.05. Temporary Number Plates. Each actuator shall be factory tagged or marked to identify the actuator and the applicable valve or gate by number or service as indicated in the valve or gate schedule.

1-3. SUBMITTALS. Complete drawings, details, and specifications covering the actuators and their appurtenances shall be submitted in accordance with the Submittal Procedures section. Submittal drawings shall clearly indicate the country of origin of each actuator and its components.

Submittal drawings shall include separate wiring diagrams for each electrically operated or controlled actuator and the electrical control equipment. Each actuator drawing shall be identified with the respective valve number or name.

For electric or cylinder actuators, certified copies of reports covering proof-of-design testing of the actuators as set forth in Section 5 of ANSI/AWWA C541 or ANSI/AWWA C542 respectively, together with an affidavit of compliance as indicated in Section 6.3 of ANSI/AWWA C541 or ANSI/AWWA C542 respectively, shall be submitted to Engineer before the actuators are shipped.

PART 2 - PRODUCTS

2-1. PERFORMANCE AND DESIGN REQUIREMENTS.

2-1.01. General. Actuators and appurtenances shall be designed for the conditions and requirements as indicated in the respective valve and gate sections.

Liberal factors of safety shall be used throughout the design, especially in the design of parts subject to intermittent or alternating stresses. In general, working stresses shall not exceed one-third of the yield point or one-fifth of the ultimate strength of each material.

2-1.02. Valve Actuators. Each actuator shall be designed to open or close the valve under all operating conditions. Actuators shall be designed for the

maximum pressure differential across the valve and maximum velocities through the valve where indicated in the respective valve schedules.

Valve actuators shall be provided and adjusted by the valve manufacturer. Actuator mounting arrangements and positions shall facilitate operation and maintenance and shall be determined by the valve manufacturer unless indicated otherwise on the Drawings or directed by Engineer.

2-1.03. Gate Actuators. Actuators shall be sized to produce the torque or thrust required to operate the gate when subject to the seating and unseating operating heads as indicated in the respective gate schedules.

Both the design head and the operating head shall be measured from the surface of the liquid to the center line of the gate.

2-1.04. Limit Switches. Limit switches shall be provided as indicated on the Drawings or in the valve and gate schedules.

Limit switches for intelligent and standard electric actuators shall be as indicated in their respective paragraphs.

2-2. MATERIALS. Except as modified or supplemented herein, materials used in the manufacture of actuators shall conform to the requirements of the applicable governing standard(s).

2-3. VALVE MANUAL ACTUATORS.

2-3.01. General. Manual actuators of the types listed in the valve specifications or schedules shall be provided by the valve manufacturer.

Unless otherwise indicated or specified, each geared manual actuator shall be equipped with an operating handwheel.

The direction of rotation of the wheel, wrench nut, or lever to open the valve shall be to the left (counterclockwise). Each valve body or actuator shall have cast thereon the word "Open" and an arrow indicating the direction to open.

The housing of traveling-nut type actuators shall be fitted with a removable cover which shall permit inspection and maintenance of the operating mechanism without removing the actuator from the valve. Travel limiting devices shall be provided inside the actuator for the open and closed positions. Travel limiting stop nuts or collars installed on the reach rod of traveling-nut type operating mechanisms shall be field adjustable and shall be locked in position by means of a removable roll pin, cotter pin, or other positive locking device. The use of stop nuts or adjustable shaft collars which rely on clamping force or setscrews to prevent rotation of the nut or collar on the reach rod will not be acceptable.

Each actuator shall be designed so that shaft seal leakage cannot enter the actuator housing.

Valves for throttling service shall be equipped with an infinitely variable locking device or a totally enclosed gear actuator.

Actuators shall produce the required torque with a maximum pull of 80 lbs on the lever, handwheel, or chain. Actuator components shall withstand, without damage, a pull of 200 lbs on the handwheel or chainwheel or an input of 300 foot-lbs on the operating nut.

2-3.02. Handwheels. Handwheel diameters shall be at least 8 inches but not more than 24 inches for 30 inch and smaller valves and not more than 30 inches for 36 inch and larger valves.

2-3.03. Chainwheels. Unless otherwise specified in the valve schedules, all valves with center lines more than 7'-6" above the floor shall be provided with chainwheels and operating chains. Each chainwheel operated valve shall be equipped with a chain guide which will permit rapid handling of the operating chain without "gagging" of the wheel and will also permit reasonable side pull on the chain. Suitable extensions shall be provided, if necessary, to prevent interference of the chain with adjacent piping or equipment. Operating chains shall be hot-dip galvanized or zinc plated carbon steel and shall be looped to extend to within 4 feet of the floor below the valve.

2-3.04. Levers. Levers shall be capable of being locked in at least five intermediate positions between fully open and fully closed. In any building or structure containing lever operated valves, at least two operating levers shall be provided for each size and type of lever operated valve.

2-3.05. Chain Levers. Suitable actuator extensions shall be provided, if necessary, to prevent interference of the chain with adjacent piping or equipment. Operating chains shall be hot-dip galvanized carbon steel and shall be looped to extend to within 4 feet of the floor below the valve.

2-3.06. Wrench Nuts. Unless otherwise specified in the valve schedules or on the Drawings, wrench nuts shall be provided on all buried valves and on all valves that are to be operated through floor boxes. Unless otherwise directed by Owner, all wrench nuts shall comply with Section 4.4.13 of ANSI/AWWA C500. At least two operating keys shall be furnished for operation of the wrench nut operated valves.

2-3.07. Operating Stands. Operating stands shall be provided in the locations indicated on the Drawings or as indicated in the valve and gate schedules. Operating stands shall support the handwheel approximately 36 inches above

the floor. A sleeve made from standard weight galvanized steel pipe shall be provided for the opening in the floor beneath each operating stand. When stems are 10 feet or longer, a suitable thrust bearing shall be provided in each operating stand to carry the weight of the extension stem.

2-3.08. Wall Brackets. Wall brackets shall be provided to support manual actuators in the locations indicated on the Drawings or in the respective valve schedules. The horizontal face of the bracket shall be predrilled to accept the actuator and the stem without modification. The top of the bracket shall extend sufficiently to bear on and transfer thrust loads to the top of the supporting structure.

2-4. GATE MANUAL ACTUATORS. Not used.

2-5. INTELLIGENT ELECTRIC ACTUATORS. Not used.

2-6. STANDARD ELECTRIC ACTUATORS. Not used.

2-7. HYDRAULIC CYLINDER ACTUATORS. Not used.

2-8. AIR CYLINDER ACTUATORS. Not used.

2-9. VANE TYPE PNEUMATIC ACTUATORS. Not used.

2-10. AIR-OIL CYLINDER ACTUATORS. Not used.

2-11. PORTABLE ELECTRIC ACTUATORS. Not used.

2-12. PORTABLE HYDRAULIC ACTUATORS. Not used.

2-13. ACTUATOR ACCESSORIES.

2-13.01. Extension Stems. Extension stems and stem guides shall be furnished when indicated in the respective valve schedules, indicated on the Drawings, or otherwise required for proper valve operation. Extension stems shall be of solid steel and shall be not smaller in diameter than the stem of the actuator shaft. Extension stems shall be connected to the actuator with a single Lovejoy "Type D" universal joint with grease-filled protective boot. All stem connections shall be pinned.

At least two stem guides shall be furnished with each extension stem, except for buried valves. Stem guides shall be of cast iron, bronze bushed, and adjustable in two directions. Stem guide spacing shall not exceed 100 times the stem diameter or 10 feet, whichever is smaller. The top stem guide shall be designed to carry the weight of the extension stem. The extension stem shall be provided with a collar pinned to the stem and bearing against the stem thrust guide.

Extension stems for chemical resistant butterfly valves located in drainage sumps shall be the two-piece type with stainless steel stem, PVC housing, wall support, and collar. Unless otherwise indicated on the Drawings, the length of the stem extension shall be as necessary to position the valve operator 12 inches above the maximum liquid level in the immediate area.

Extension stems for buried valve actuators shall extend to within 6 inches of the ground surface, shall be centered in the valve box using spacers, and shall be equipped with a wrench nut.

Extension stems for buried valve actuators shall be provided with position indicators as specified in the valve schedules.

2-13.02. Position Indicators. Unless otherwise specified, each valve actuator shall be provided with a position indicator to display the position of the plug or disc relative to the body seat opening.

For quarter turn plug, ball, or cone type valves installed in interior locations, the indicating pointer shall be mounted on the outer end of the valve operating shaft extension and shall operate over an indicating scale on the operating mechanism cover. Where the shaft passes through the cover, a suitable stuffing box or other seal shall be provided to prevent the entrance of water.

Each actuator for butterfly valves, except where located in manholes, buried, or submerged, shall have a valve disc position indicator mounted on the end of the valve shaft. A disc position indicator shall also be provided on each operating stand or the actuator mounted thereon.

2-13.02.01. Position Indicators for Buried Actuators. Not used.

2-13.03. Floor Boxes. Openings through concrete slabs provided for key operation of valves shall be provided with a cast iron floor box complete with cover. The floor box shall be of the depth indicated on the Drawings. Where the operating nut is in the slab, the stem shall have a guide to maintain the nut in the center of the box; where the nut is below the slab, the opening in the bottom of the box shall accommodate the operating key.

Each floor box and cover shall be shop coated with manufacturer's standard coating.

2-13.04. Torque Tubes. Torque tube shall utilize pipe rather than solid shafting between the valve input shaft and the output shaft of the valve floorstand operator. An adjustment of 2 inches shall be provided in the torque tube installation. Torque tube shall be coated with the same material as the submerged valve.

2-13.05. Valve Boxes. Not used.

2-14. SHOP PAINTING. All ferrous metal surfaces, except bearing and finished surfaces and stainless steel components of valve actuators and accessories, shall be shop painted for corrosion protection. The valve manufacturer's standard coating will be acceptable, provided it is functionally equivalent to the specified coating and is compatible with the specified field painting.

The following surfaces shall be painted:

Polished or Machined Surfaces	Rust-preventive compound.
Other Surfaces	Epoxy.
Actuators and Accessories	Universal primer.

PART 3 - EXECUTION

3-1. INSTALLATION. Actuators will be installed on the valves in accordance with the Valve Installation section and on gates in accordance with the Gate Installation section.

End of Section

Section 16050

ELECTRICAL

PART 1 - GENERAL

1-1. SCOPE. This section covers the furnishing and installation of all equipment and materials needed for the electrical requirements of this Contract. It also covers conduit, wiring, and terminations for electrical equipment installed under Electrical Equipment Installation section.

This section covers the installation and interconnection of electrical equipment furnished under other sections, except electrical items designated to be installed under those sections.

This section covers installation of equipment furnished by Owner.

1-2. GENERAL. Electrical apparatus on all equipment shall be installed complete and placed in readiness for proper operation.

Electrical materials furnished and installed under this section shall be fabricated, assembled, erected, and placed in proper operating condition in full conformity with the Drawings, Specifications, engineering data, instructions, and recommendations of the equipment manufacturer, unless exceptions are noted by Engineer.

1-2.01. General Equipment Stipulations. The General Equipment Stipulations section shall apply to all equipment provided under this section. If requirements in this section differ from those in the General Equipment Stipulations section, the requirements specified herein shall take precedence

1-2.02. Seismic Design Requirements. Seismic design requirements for products specified herein shall be as indicated in the Meteorological and Seismic Design Criteria section.

1-2.03. Coordination. Electrical work shall conform to the construction schedule and the progress of other trades.

1-2.04. Anchor Bolts and Expansion Anchors. All anchor bolts, nuts, washers, and expansion anchors shall comply with Anchorage in Concrete and Masonry section, except smaller than 3/4 inch will be permitted to match NEMA standard size bolt holes on motors and electrical equipment.

1-2.05. Drawings. Supplementing this section, the Drawings indicate locations of equipment and enclosures and provide one-line and schematic diagrams regarding the connection and interaction with other equipment.

1-3. CODES AND PERMITS. All work shall be performed and materials shall be furnished in accordance with the NEC - National Electrical Code, the NESC - National Electrical Safety Code, and the following standards where applicable:

AEIC	The Association of Edison Illuminating Companies
ANSI	American National Standards Institute
ASTM	American Society for Testing and Materials
AWG	American Wire Gauge
Fed Spec	Federal Specification
ICEA	Insulated Cable Engineers Association
IEEE	Institute of Electrical and Electronics Engineers
IESNA	Illuminating Engineering Society of North America
NEIS	National Electrical Installation Standards
NEMA	National Electrical Manufacturers Association
NFPA	National Fire Protection Association
UL	Underwriters' Laboratories

Equipment covered by this section shall be listed by UL, or by a nationally recognized third party testing laboratory. All costs associated with obtaining the listing shall be the responsibility of Contractor. If no third-party testing laboratory provides the required listing, an independent test shall be performed at Contractor's expense. Before the test is conducted, Contractor shall submit a copy of the testing procedure to be used.

1-4. SEISMIC DESIGN REQUIREMENT.

1-4.01. Seismic Design Requirements. Submit confirmation of compliance with the requirements of the Meteorological and Seismic Design Criteria section.

1-5. IDENTIFICATION.

1-5.01. Conduit. Conduits in manholes, handholes, building entrance pull boxes, junction boxes, and equipment shall be provided with identification tags. Identification tags shall be 19 gauge stainless steel, with 1/2 inch stamped letters and numbers as indicated on the Drawings. Identification tags shall be attached to conduits with nylon tie wraps and shall be positioned to be readily visible.

1-5.02. Conductors. All conductors in power, control, and instrumentation circuits shall be identified and color coded as described herein.

1-5.02.01. Conductor Identification Number. Except for lighting and receptacle circuits, each individual conductor in power, control, and instrumentation circuits shall be provided with wire identification markers at the point of termination.

The wire markers shall be of the heat-shrinkable tube type, with custom typed identification numbers.

The wire numbers shall be as indicated on the equipment manufacturer's drawings.

The wire markers shall be positioned to be readily visible for inspection.

1-5.02.02. Conductor Color Coding. Power conductors shall be color coded as indicated below. For conductors 6 AWG and smaller, the color coding shall be the insulation finish color. For sizes larger than 6 AWG, the color coding may be by marking tape. The equipment grounding conductor shall be green or green with one or more yellow stripes if the conductor is insulated.

The following color coding system shall be used:

120/240V single-phase — black, red, and white
277/480V, three-phase — brown, orange, yellow, and gray

Control and instrumentation circuit conductors shall be color coded as indicated in the Cable Data Figures at the end of this section.

1-5.03. Motor Starters. Motor starters shall be provided with nameplates identifying the related equipment. Pilot controls and indicating lights shall have engraved or etched legends ("start", "stop", etc.) as indicated on the Drawings. Nameplates shall be laminated white-over-black plastic, with 1/8 inch engraved letters, and shall be securely fastened to the motor starters.

1-5.04. Control Stations. Not used.

1-5.05. Circuit Breakers. Circuit breakers shall be provided with nameplates identifying related equipment. Nameplates shall be laminated white-over-black plastic, with 1/8 inch engraved letters, and shall be securely fastened to the circuit breakers.

1-5.06. Disconnect Switches. Not used.

1-5.07. Arc Flash Hazard Labels. Power centers, switchgear, switchboards, motor control centers, motor control line ups, transfer switches, industrial control panels, and other electrical equipment likely to be worked on energized shall be provided with permanent labels warning the risk of arc flash and shock hazard. Labels shall be designed in accordance with ANSI Z535.4 and shall include the following:

WARNING
Arc Flash and Shock Hazard

Appropriate personal protection equipment (PPE) required. SEE NFPA 70E.
Equipment must be accessed by qualified personnel only.
Turn off all power sources prior to working on or inside equipment.

Additional information shall be provided on the labels where specified in the Arc Flash Hazard Analysis section of this section.

1-6. SUBMITTALS. Complete assembly, foundation, and installation drawings, together with complete engineering data covering the materials used, parts, devices, and accessories forming a part of the work performed by the Contractor, shall be submitted in accordance with the Submittal Procedures section. The drawings and data shall include, but shall not be limited to, the following:

Drawings and data.
Operating manuals.
Samples.
Test reports
Studies

1-6.01. Submittal Identification. Information covering all materials and equipment shall be submitted for review in accordance with the Submittal Procedures section. Each sheet of descriptive literature submitted shall be clearly marked to identify the material or equipment as follows:

a. Lamp fixture descriptive sheets shall show the fixture schedule letter, number, or symbol for which the sheet applies.

b. Equipment and materials descriptive literature and drawings shall show the specification paragraph for which the equipment applies.

c. Sheets or drawings covering more than the item being considered shall have all inapplicable information crossed out.

d. A suitable notation shall identify equipment and materials descriptive literature not readily cross-referenced with the Drawings or Specifications.

e. Schematics and connection diagrams for all electrical equipment shall be submitted for review. A manufacturer's standard connection diagram or schematic showing more than one scheme of connection will not be accepted, unless it is clearly marked to show the intended connections.

f. Surge protective device submittals shall include drawings (including unit dimensions, weights, component and connection locations, mounting provisions, and wiring diagrams), equipment manuals that detail the installation, operation and maintenance instructions for the specified unit(s), and manufacturer's descriptive bulletins and product sheets.

Contractor shall submit the name and qualifications of the Engineering and Testing Services firm proposed to perform the protective device study and the on-site testing.

Within 90 days after the Notice to Proceed, Contractor shall furnish a submittal for all types of cable and conduit to be provided. The submittal shall include the cable manufacturer and type, and sufficient data to indicate that the cable and conduit meet the specified requirements.

In addition to the complete specifications and descriptive literature, a sample of the largest size of each type of cable shall be submitted for review before installation. Each sample shall include legible and complete surface printing of the cable identification.

1-6.02. Seismic Design Requirements. Submitted confirmation of compliance with the requirements of the Meteorological and Seismic Design Criteria section.

1-7. PROTECTION AND STORAGE. During construction, the insulation on all electrical equipment shall be protected against absorption of moisture, and metallic components shall be protected against corrosion by strip heaters, lamps, or other suitable means. This protection shall be provided immediately upon receipt of the equipment and shall be maintained continuously.

PART 2 - PRODUCTS

2-1. POWER SERVICE ENTRANCE. Contractor shall consult the local electric utility regarding their service installation requirements, and shall furnish the service equipment in compliance with these requirements.

Power service equipment to be furnished by Contractor shall include, but is not limited to, meter board, meter socket, meter test cabinet, meter transformer cabinet, disconnecting means ,grounding materials, riser conduits, and other service entrance fittings required by the utility and for compliance with local codes and regulations.

Contractor shall also provide trenching and backfill, conduits, service cables, concrete for duct banks, and other underground service entrance fittings required by the utility for underground service installation.

A weatherhead shall be provided on each service riser conduit.

2-2. TELEPHONE SERVICE ENTRANCE. Not used.

2-3. CABLE. All cables of each type (such as 600 volt power cable) shall be from the same manufacturer.

All types of cable shall conform to the Cable Data Figures at the end of this section and as described herein.

2-3.01. Lighting Cable. Not used.

2-3.02. 600 Volt Power Cable. Cable in power, control, indication, and alarm circuits operating at 600 volts or less, except where lighting, multiconductor control, and instrument cables are required, shall be 600 volt (Figure 2-16050 XHHW-2) power cable.

2-3.03. Instrument Cable. Cable for electronic circuits to instrumentation, metering, and other signaling and control equipment shall be two- or three-conductor instrument cable twisted for magnetic noise rejection and protected from electrostatic noise by a total coverage shield. Types of instrument cables shall be (Figure 4-16050 single pair).

2.3.04. Multiconductor Control Cable. Not used.

2-3.05. Medium Voltage Power Cable. Not used.

2-3.06. Tray Cable. Not used.

2-4. CONDUIT. Conduit and raceways shall be as described in the following paragraphs:

2-4.01. Rigid Steel Conduit. Not used.

2-4.02. Intermediate Metal Conduit (IMC). Not used.

2-4.03. Liquidtight Flexible Metal Conduit. Liquidtight flexible metal conduit shall be hot-dip galvanized steel, shall be covered with a moisture-proof polyvinyl chloride jacket, and shall be UL labeled.

2-4.04. Utility (PVC) Duct. Not used.

2-4.05. Rigid Nonmetallic (PVC) Conduit. PVC conduit shall be heavy wall, Schedule 40, UL labeled for aboveground and underground uses, and shall conform to NEMA TC-2 and UL 651.

2-4.06. PVC-Coated Rigid Steel Conduit. The conduit shall be rigid steel. Before the PVC coating is applied, the conduit shall be hot dip galvanized inside and out with hot galvanized threads. The hot-dip galvanized surfaces shall be coated with a primer to obtain a bond between the steel substrate and the coating. The PVC coating shall be bonded to the primed outer surface of the conduit. The bond on conduit and fittings shall be stronger than the tensile strength of the PVC coating. The thickness of the PVC coating shall be at least 40 mils .

A chemically cured two-part urethane coating, at a nominal 2 mil thickness, shall be applied to the interior of all conduit and fittings. The coating shall be sufficiently flexible to permit field bending the conduit without cracking or flaking of the coating.

Every female conduit opening shall have a PVC sleeve extending one conduit diameter or 2 inches, whichever is less, beyond the opening. The inside diameter of the sleeve shall be the same as the outside diameter of the conduit before coating. The wall thickness of the sleeve shall be at least 40 mils .

All fittings, condulets, mounting hardware, and accessories shall be PVC-coated. All hollow conduit fittings shall be coated with the interior urethane coating described above. Fittings shall be Form 8 condulets, ½" through 4" diameters, shall have a v-seal tongue-in-grooved gasket and supplied with plastics encapsulated stainless steel cover screws to effectively seal against the elements. The screw heads on condulets shall be encapsulated with a corrosion-resistant material. Form 8 fittings shall be UL Type 4X and IP69 listed.

A "PVC Coated Sealing Locknut' shall be used on all exposed male threads transitioning in female NPT threads which do not have sealing sleeves, including transitions from PVC coatings / female adapters to PVC-coated GRC elbows in direct burial applications. "PVC Coated Sealing Locknuts" are not to be used in place of a Myers hub.

PVC coated rigid steel conduit shall be UL listed and carry the ETL PVC-001 label. The PVC coasted rigid steel conduit shall be manufactured by Calbond, Plasti-Bond, Perma-Cote, KroKap, or Robroy Industries.

2-4.08. Rigid Aluminum Conduit (RAC). Not used.

2-4.09. Cable Tray. Not used.

2-5. WIRING DEVICES, BOXES, AND FITTINGS. Concealed conduit systems shall have flush-mounted switches and convenience outlets. Exposed conduit systems shall have surface-mounted switches and convenience outlets.

2-5.01. Conduit Boxes and Fittings.

a. Stainless steel, threaded, boxes and fittings shall be manufactured by Crouse-Hinds, Appleton, or O Z Gedney. In applications utilizing aluminum conduit systems, aluminum boxes and fittings manufactured by Crouse-Hinds, Appleton, or O Z Gedney shall be installed.

b. Rigid PVC device boxes and fittings shall be manufactured by Carlon or Cantex.

c. Stainless steel device boxes shall be manufactured by Appleton, Raco, or Steel City.

d. PVC coated device boxes shall be manufactured by Calbond, Plasti-Bond, Perma-Cote, KroKap, or Robroy Industries.

e. Hub arrangements on threaded fittings shall be the most appropriate for the conduit arrangement to avoid unnecessary bends and fittings.

2-5.02. Device Plates.

a. Stainless steel device plates shall be used on surface mounted outlet boxes where weatherproof plates are not required.

b. Device plates on flush mounted outlet boxes where weatherproof plates are not required shall be AISI Type 302 stainless steel, Eaton "93000 series", Hubbell "S series", or Leviton "840nn-40 series"; nylon or polycarbonate, Eaton "5000 series", Hubbell "Pn series", or Leviton "807nn-I series".

c. Device plate mounting hardware shall be countersunk and finished to match the plate.

d. Device plates for switches outdoors or indicated as weatherproof shall have provisions for padlocking switches "On" and "Off", and shall be Appleton "FSK-1VS", Crouse-Hinds "DS185" or O Z Gedney "FS-1-WSCA".

e. Device plates for receptacles indicated as weatherproof shall be Appleton "FSK-WRD", Crouse-Hinds "WLRD1", or O Z Gedney "FS-1-WDCA.

f. Flush-mounted, weatherproof plates shall be provided with adapter plates, Appleton "FSK-SBA" or Crouse-Hinds "FS031".

g. Device plates for ground fault interrupter receptacles indicated to be weatherproof shall be Appleton "FSK-WGFI", Eaton "S966", or O Z Gedney "FS-1-GFCA".

h. Receptacle covers outdoors or otherwise indicated to be weatherproof while in-use shall be die cast aluminum and shall include a padlock eye. Covers for standard convenience outlets shall be Hubbell “WP8M” or Thomas and Betts Red Dot “CKMUV”. Covers for ground fault interrupter receptacles shall be Hubbell “WP26M” or Thomas and Betts Red Dot “CKMUV”.

i. Engraved device plates, where required, shall be manufactured by Leviton, or equal.

j. Device plates on PVC conduit fittings shall be Carlon "E98 Series" or Cantex "513300 Series".

2-5.03. Wall Switches.

a. Switches on ac lighting panel load circuits through 277 volts shall be 20 amperes, 120/277 volts, Eaton "AH1221V" through "AH1224V", Hubbell "HBL 1221I" through "HBL 1224I", or Leviton "1221-2I" through "1224-2I".

b. Switches for pulse control of lighting contactors shall be 20 amperes, 120/277 volts, momentary, double-throw, center "Off", Eaton "1995V", Hubbell "1557I" or Leviton "1257-I".

c. Switches on ac lighting panel load circuits through 277 volts in Class I, Division 1 and Division 2, Group D hazardous areas indicated on the Drawings shall be 20 ampere, 120/277 volts. Hazardous area switches shall be factory sealed tumbler switches, Appleton “EDS” or Killark “FXS”.

2-5.04. Receptacles.

a. Standard convenience outlets shall be duplex, three-wire, grounding, 20 amperes, 125 volts, Eaton "AH5362V", Hubbell "5362I" or Leviton "5362-I" for 120 volt circuits, and 250 volts, Eaton "AH5462CV", Hubbell "5462I" or Leviton "5462-I" for 240 volt circuits.

b. Ground fault circuit interrupter receptacles shall be duplex, 20 amperes, 125 volts, Eaton "SGFH20", Hubbell "GF5362I" or Leviton "7899-I".

c. Ground fault circuit interrupter receptacles in damp or wet locations shall be duplex, 20 amperes, 125 volts, Hubbell "GFWRST20I" or Leviton "WT899-HGI".

d. Welding receptacles shall be 30 amperes, 600 volts, 3 phase, with grounding conductors connected through a fourth pole, Appleton "ADRE3034-100", Crouse-Hinds "AR348" plus "ARRC33" and "AR30" or Leviton " 430MI5W". One matching plug, Appleton "ACP3034BC", Crouse-Hinds "APJ3485" or

Leviton "430P5W" with appropriate woven grip and plug cap, shall be furnished for the cable size directed by Owner.

e. Welding receptacles shall be 60 amperes, 240 volts, 3 phase, with grounding conductors connected through a fourth pole, Appleton "ADRE6034-150", Crouse-Hinds "AREA6425" or Leviton "460MI9W". One matching plug, Appleton "ACP6034BC", Crouse-Hinds "APJ6485" or Leviton "460P9W" with appropriate woven grip and plug cap, shall be furnished for the cable size directed by Owner.

f. Receptacles in Class I, Division 1 and Division 2, Group D hazardous areas indicated on the Drawings shall be three-wire, grounding, 20 amperes, 125 volts. Hazardous area receptacles shall be factory sealed, with an integral switch that is only activated when an approved matching plug is fully inserted and rotated into the engaged position. Hazardous area receptacles shall be Appleton “ENR”, Crouse-Hinds “ENR”, or Killark “UGR”.

2-5.05. Special Outlets. Not used.

2-6. JUNCTION BOXES, PULL BOXES, AND WIRING GUTTERS. Boxes and gutters in corrosive areas indicated on the Drawings and outdoor boxes and gutters shall be NEMA Type 4X, 316 stainless steel and shall be rigidly supported by PVC-coated or 316 stainless steel framing materials. Mounting hardware, which includes nuts, bolts, and anchors, shall be stainless steel. All damaged coatings shall be repaired according to the manufacturer's instructions.

Bolt-on junction box covers 3 feet square or larger, or heavier than 25 lbs, shall have rigid handles. Covers larger than 3 by 4 feet shall be split.

Where indicated on the Drawings, junction and pull boxes with a removable side opposite the underground conduits shall be provided over building ends of underground conduit banks. Boxes shall be sized in accordance with the National Electrical Code, including space for full size continuations of all underground conduits not originally continued. Conduit arrangement shall leave maximum space for future conduits.

2-7. LIGHTING FIXTURES. Not used.

2-8. LIGHTING PANELS. Not used.

2-9. POWER PANELS. Not used

2-10. SURGE PROTECTIVE DEVICES. Not used.

2-11. COMBINATION MOTOR STARTERS. As indicated on the Drawings, motor starters, unless otherwise specified, shall be reduced voltage, magnetic,

non-reversing and NEMA rated. The starters shall be installed in the Pump Control Panel. Reduced voltage Solid-State (RVSS) starters shall be furnished with across-the-line contactors for use after motor has attained full voltage operating speed motor and for bypass operation upon RVSS fault.

Heaterless overload protection shall be provided by three current sensors monitored by a microprocessor. The overload device shall also include phase loss and unbalance protection, trip class selection, Class II ground fault protection, and manual reset.

Each starter shall include auxiliary contacts as required, plus one spare NO and one spare NC contact.

Contractor shall match the sizes of control power transformers, overload devices, heaters, and starters to the equipment furnished, as they may differ from the values indicated on the Drawings. Control power transformers shall have both primary leads fused, one secondary lead fused, and one secondary lead grounded.

All starters shall be provided with control terminal blocks. Terminal blocks shall be pull-apart type rated 20 amperes. All current carrying parts shall be tin-plated. The removable portion of the terminal blocks shall be used for factory installed wiring.

All push buttons, selector switches, and pilot lights indicated on the schematics to be provided on or in the starter enclosure shall be 30.5 mm heavy-duty, oiltight construction. Pilot lights shall be full voltage type with push-to-test LED lamps. Push buttons on starters located outdoors shall be provided with protective caps.

2-11.01. Three Phase Starters. Three phase starters shall be circuit breaker combination type consisting of 3 phase, 60 Hz contactors with heaterless overloads, a 120 volt ac coil, a dry type control power transformer where required, and a circuit breaker disconnect. Control power transformers shall be sized to handle all simultaneous loads. Starters shall be at least Size 1, or shall be sized as indicated on the Drawings.

Circuit breakers shall be 600 volt magnetic motor circuit protectors for motors smaller than 100 horsepower and 600 volt thermal-magnetic type for 100 horsepower and larger motors. Each breaker shall be manually operated with a quick-make, quick-break, trip-free toggle mechanism.

Three phase starters shall be furnished with external manual breaker operating handles and provisions for up to three padlocks. The access door shall be interlocked with the motor circuit protector, so that the door cannot be opened, except by an interlock override, while the breaker is closed.

The complete 3 phase starter shall have an interrupting rating of at least 14,000 amperes at 480 volts.

2-11.02. Single Phase Starters. Single phase starters shall consist of single phase, 60 Hz contactors with thermal overloads and an integral or separately enclosed short-circuit protection device. Starters shall be at least NEMA Size 0, or shall be sized as indicated on the Drawings. Integral short-circuit protection devices for single-phase starters shall be 120/240 volt, magnetic motor circuit protectors.

Separately enclosed short-circuit protection devices for single phase starters shall be molded-case circuit breakers for motor loads 6 amperes and higher and fused switch disconnects for motor loads lower than 6 amperes. Circuit breaker disconnects shall be 120/240 volt, molded-case, thermal-magnetic circuit breakers. Fused switch disconnects shall have quick-make, quick-break mechanisms and 250 volt, dual-element, time-delay fuses.

The short-circuit protection devices shall have external operating handles capable of being padlocked in the open position, and shall have an interrupting rating of at least 10,000 amperes at 240 volts.

2-12. SEPARATELY ENCLOSED MANUAL STARTERS. Not used.

2-13. CONTROL STATIONS. Not used.

2-14. SEPARATELY ENCLOSED CIRCUIT BREAKERS. Circuit breakers shall be 3 pole, 480 volt, molded-case circuit breakers of not less than 65,000 amperes interrupting rating at 480 volts ac, complete with thermal and instantaneous trip elements. Breaker enclosures shall have NEMA designations appropriate for the locations where they will be installed. NEMA Type 4X stainless steel enclosures shall be provided for outdoor locations. Each breaker shall be manually operated with a quick-make, quick-break, trip-free toggle mechanism. Bimetallic thermal elements shall withstand sustained overloads and short-circuit currents without injury and without affecting calibration.

Circuit breakers shall have "On", "Off", and "Tripped" indication and padlockable exterior handles.

2-15. DISCONNECT SWITCHES. Not used.

2-16. LIGHTING AND AUXILIARY POWER TRANSFORMERS. Not used.

2-17. POWER CENTERS. Power centers shall consist of a primary breaker, a 480-120/240 volt or 480-120/208 volt transformer, a secondary breaker, and a distribution panelboard in a NEMA Type 4X enclosure. Transformer and circuit breaker configuration and ratings shall be as indicated on the Drawings.

2-17.01. Transformers. Transformers shall be self-air-cooled, epoxy-resin encapsulated dry type with a 115 degree C temperature rise. Transformers shall have at least two full capacity voltage taps.

2-17.02. Circuit Breakers. Circuit breakers shall be thermal-magnetic, bolt-in, individually front replaceable, and shall indicate "On", "Off", and "Tripped". Breakers and provisions for future breakers shall be provided in the quantities, poles, and ampere ratings indicated on the Drawings. Breakers shall be single pole, 20 amperes, except as indicated otherwise.

2-18. POWER FACTOR CORRECTION CAPACITORS. Not used.

2-19. LIGHTING CONTACTORS. Not used.

2-20. PHOTOELECTRIC CONTROLS. Not used.

2-21. RELAY ENCLOSURES. Not used.

2-22. ALARM HORN AND BEACON. The alarm horns and beacons shall be provided and located as indicated on the Drawings. The beacon shall be 120 VAC, strobe light with clear lens and acrylic dome, Edwards "Model No. 94C-N5" or Federal Signal "Model 371DST". The alarm horn shall be 120 VAC, weatherproof horn, Edwards "Model No. 876-N5" or Federal Signal "Model 350WB".

2-23. HEAT-TRACED PIPING. Not used.

2-23. POWER METERING. Not used.

PART 3 - EXECUTION

3-1. INSTALLATION, TESTING, AND COMMISSIONING. All material, equipment, and components specified herein shall be installed, tested, and commissioned for operation in compliance with NECA 1000 – NEIS Specification System. Where required in NECA 1000, testing and commissioning procedures shall be followed prior to energizing equipment.

3-2. ARC FLASH HAZARD ANALYSIS. Contractor shall commission an Arc Flash Hazard Analysis for each piece of electrical equipment including power centers, transfer switches, industrial control panels, and other electrical equipment likely to be worked on energized, in accordance with OSHA 29 CFR Part 1910, NEC, NFPA 70E, and IEEE 1584 and shall submit an Arc Flash Hazard Analysis report as specified herein.

The scope of the analysis shall include all electrical equipment at the pump station, beginning with the electric utility meter socket or service entrance equipment down to three-phase ac equipment operating at 208V and above.

The Arc Flash Hazard Analysis shall be performed in association with, or as a continuation of, the short circuit study and protective device study.

Protective-device settings shall be selected to providing the necessary equipment protection and device coordination required while balancing the goal to reduce the calculated incident energy to the greatest extent possible.

The Arc Flash Hazard Analysis shall calculate the arc flash protection boundary and the arc flash incident energy at defined working distances for the locations specified in the analysis. The analysis shall be performed for multiple electrical system modes of operation in order to calculate the worst-case incident energy at each piece of equipment. At a minimum, the system shall be analyzed for the minimum and maximum available fault current and X/R ratios from the electric utility supplying service or for the separately derived power system. The Contractor shall be responsible for obtaining the available fault current values from the local electric utility. The analysis shall not assume bolted fault current values.

For equipment with an integral main overcurrent protective device that is not adequately isolated from the bus, the upstream protective device shall be used as the fault clearing device in the analysis. Where arc reduction maintenance mode switches are installed on protective devices, the arc reduction shall only apply for downstream equipment that is adequately isolated from the protective device. Adequately isolated equipment shall be confirmed by the equipment manufacturer and shall be submitted to Engineer for review.

The Contractor shall be responsible for collecting all field data for a complete analysis. Assumptions should only be made after every effort has been made to obtain the needed information. All assumptions used in the analysis shall be documented in the report for review by Engineer.

The results shall include, but shall not be limited to, a tabulated spreadsheet of the following items for each piece of equipment included in the analysis:

Equipment name.

Three-phase bolted fault current.

Arcing fault current.

Arcing fault current through the protective device.

Protective device clearing the fault.

Protective device opening time.

Bus gap.

Worst-case incident energy and corresponding working distance. Equipment with arc reduction maintenance mode switches shall include the calculated

incident energy level with and without the switch enabled.

Arc flash protection boundary.

An Engineering and Testing Services firm acceptable to Engineer shall conduct the Arc Flash Hazard Analysis.

3-2.01. Arc Flash Analysis Software. The Arc Flash Hazard Analysis shall be performed using the latest version of ETAP electrical power system analysis software, without exception. After the final version of the study and analysis are completed and accepted, Contractor shall provide two (2) copies of the ETAP electronic model file to Owner.

3-2.02. Arc Flash Hazard Report.

Contractor shall be responsible for submitting complete and accurate arc flash analysis information in the Arc Flash Hazard Report. The report shall be submitted to Engineer for review before the final report is prepared. Contractor shall ensure that calculated values for arc flash-protection boundary, working distance, incident energy, and required Personal Protective Equipment is submitted and provide substantiation that the information will be prominently displayed on electrical equipment.

The report shall include the following information at a minimum:

Executive summary.

Description of scope and study methodology.

Documentation of the modes of operation evaluated in the analysis including applicable input data such as utility fault current values.

Discussion of results and any recommendations.

Tabulated results spreadsheet.

List of assumptions.

One-line diagram(s) from the computer model software showing equipment names and other applicable information.

Documentation of software study parameters and configuration settings.

Recommended arc flash Personal Protective Equipment (PPE) selection in accordance with NFPA 70E.

The Arc Flash Hazard Analysis report shall be bound in a standard 8-1/2 by 11 inch three-ring binder and shall be submitted in accordance with the Submittal Procedures section. Final selection of required Personal Protective Equipment shall be subject to review and acceptance by Engineer.

The final report shall be signed and sealed by a registered Professional Engineer.

3-2.03. Arc Flash Labeling. After approval of the Arc Flash Hazard Report, Contractor shall furnish and install arc flash labels on the applicable electrical equipment. The arc flash labels shall comply with ANSI Z535.4 and NFPA 70E requirements. Labels shall include, at a minimum, the nominal system voltage, the arc flash boundary distance, worst-case incident energy and the corresponding working distance, date of the analysis, and equipment name.

Equipment with arc reduction maintenance mode switches shall include a dual label with the worst-case calculated incident energy level with and without the switch enabled. The label shall clearly identify the associated maintenance mode switch that shall be enabled for the lower incident energy level to apply.

3-3. PROTECTIVE DEVICE STUDY. Contractor shall commission a short circuit study and protective device study of relays, fuses, circuit breakers, and all other protective devices and shall submit a coordination and protective device settings report as specified herein. The study shall be in compliance with IEEE 242 and include the entire distribution system, including any and all existing power distribution components which will impact the results of the protective device study, starting with the smallest 480 volt, 3 phase, 60 Hz circuit protective device on the load end, to the nearest protective device on the power company's line side. Where existing electrical distribution system components are part of the study, the Contractor shall field verify and report the respective ratings and settings of each device as found as a prerequisite to the study analysis being performed. Protective device settings shall be selected to provide selective coordination to the maximum extent possible for equipment protection and device coordination while balancing the goal to reduce the calculated incident energy to the greatest extent possible.

Contractor shall be responsible for and shall ensure that all relays, protective devices and circuit breakers shown on the Drawings and Specifications are sized and set according to the study results.

The study shall include, but shall not be limited to, the following:

Color-coded printouts of coordination curves prepared with calculation software.

A tabulation of all protective relay and circuit breaker trip settings and recommended sizes and types of medium-voltage fuses.

Motor starting profiles for all 50 horsepower and larger motors.

Transformer damage curves and protection, evaluated in accordance with IEEE C57.109.

Generator damage curves and protection, evaluated in accordance with manufacturers recommendations.

Coordination curve(s) from the power company, if available.

Calculated short-circuit values at all nodes in the distribution system included within the scope of the protective device study.

Protective device settings shall include, but not limited to, motor and pump RTD settings, motor starts per hour, bus and transformer differential settings, synch-check settings, under and over-voltage settings, under and over-frequency settings, low-voltage breaker and MCC starter overload settings, and all protective functions shown on the Drawings and Specifications

Adjustable frequency drive settings evaluated in accordance with the manufacturers recommendations and driven equipment requirements

Reduced voltage starter settings evaluated in accordance with the manufacturers recommendations and driven equipment requirements

An Engineering and Testing Services firm acceptable to Engineer shall conduct the protective device study.

Contractor shall be responsible for obtaining the following:

The coordination curves for relays, fuses, and circuit breakers.

Transformer damage curves.

Motor and pump data.

Generator data

Other applicable information for all new and existing electrical equipment.

Contractor shall coordinate with the power company to obtain the required protective device curves and shall be responsible for all the field work associated with obtaining the necessary data on existing relays, circuit breakers, fuses, and transformers to be included in the protective device study.

The available 3 phase, symmetrical fault current at the point of service shall be obtained from the Power Company.

The protective device report shall be bound in a standard 8-1/2 by 11 inch three-ring binder and shall be submitted in accordance with the Submittal Procedures section. Final selection of all protective device settings or sizes shall be subject to review and acceptance by Engineer.

3-4. POWER AND SERVICE ENTRANCE INSTALLATION. Contractor shall consult the local electric utility regarding their service installation requirements, and shall install the service equipment in compliance with these requirements. Contractor shall install all power service equipment components except for

components installed by the utility as directed in the utility service installation requirements.

Contact information for the electric utility is as follows:

Name of electric utility	Keys Energy
Electric utility contact person and telephone number	Matthew Alphonso Engineering Supervisor (305) 295-9380

Contractor shall coordinate details and timing of service entrance installations with the utility. Contractor shall complete and submit service applications to the electric utility as necessary.

3-5. TELECOMMUNICATIONS SERVICE ENTRANCE INSTALLATION. Not used.

3-6. CABLE INSTALLATION.

3-6.01. General. Except as otherwise specified or indicated on the Drawings, cable shall be installed according to the following procedures, taking care to protect the cable and to avoid kinking the conductors, cutting or puncturing the jacket, contamination by oil or grease, or any other damage. Circuits to supply electric power and control to equipment and devices, communication and signal circuits as indicated on the one-line diagrams shall be installed continuous and may not be spliced unless approved by the Engineer.

a. Stranded conductor cable shall be terminated by lugs or pressure type connectors. Wrapping stranded cables around screw type terminals is not acceptable.

b. Stranded conductor cable shall be spliced by crimp type connectors. Twist-on wire connectors may only be used for splicing solid cable and for terminations at lighting fixtures.

c. Splices may be made only at readily accessible locations.

d. Cable terminations and splices shall be made as recommended by the cable manufacturer for the particular cable and service conditions.

e. Not used.

f. Cable shall not be pulled tight against bushings nor pressed heavily against enclosures.

g. Cable-pulling lubricant shall be compatible with all cable jackets; shall not contain wax, grease, or silicone; and shall be Polywater "Type J".

h. Not used.

i. Where necessary to prevent heavy loading on cable connections, in vertical risers, the cable shall be supported by Kellems, or equal, woven grips.

j. Spare cable ends shall be taped, coiled, and identified.

k. Cables shall not be bent to a radius less than the minimum recommended by the manufacturer.

l. All cables in one conduit, over 1 foot long, or with any bends, shall be pulled in or out simultaneously.

m. Circuits to supply electric power and control to equipment and devices are indicated on the one-line diagrams. Conductors in designated numbers and sizes shall be installed in conduit of designated size. Circuits shall not be combined to reduce conduit requirements unless acceptable to Engineer.

n. Instrument cable shields and drain wires shall be continuous over the entire length of the circuit and grounded at one end only. In general, the field end of the shield shall be ungrounded. At the ungrounded termination of the circuit, the shield and drain wire shall be insulated by taping to prevent grounding.

o. Not used.

3-6.02. Underground Cable Pulling Procedure. Not used.

3-6.03. Medium-Voltage Cable Insulation Test. Not used.

3-7. CONDUIT INSTALLATION. Contractor shall be responsible for routing all conduits. This shall include all conduits indicated on the riser diagram. Conduits shall be routed as defined in these Specifications. Where conduit routing is shown on plans, it shall be considered a general guideline and shall be field verified to avoid interferences.

Except as otherwise specified or indicated on the Drawings, conduit installation and identification shall be completed according to the following procedures.

Installation of PVC Coated Conduit Systems shall be performed in accordance with the Manufacturer's Installation Manual. To assure correct installation, the installer shall be certified by the Manufacturer to install coated conduit and provide a valid, unexpired installer certification card.

3-7.01. Installation of Interior and Exposed Exterior Conduit. This section covers the installation of conduit inside structures, above and below grade, and in exposed outdoor locations. In general, conduit inside structures shall be concealed. Large conduit and conduit stubs may be exposed unless otherwise

specified or indicated on the Drawings. No conduit shall be exposed in water chambers unless so indicated on the Drawings.

Unless otherwise indicated on the Drawings, Contractor shall be responsible for routing the conduit to meet the following installation requirements:

a. Not Used.

b. Conduit installed in floor slabs and walls in non-hazardous locations shall be rigid Schedule 40 PVC.

c. Conduit installed in all exposed outdoor locations shall be PVC-coated rigid steel, rigidly supported by PVC-coated framing materials. Mounting hardware, which includes nuts, bolts, and anchors, shall be stainless steel. All damaged coatings shall be repaired according to the manufacturer's instructions.

d. Final connections to dry type transformers, to motors without flexible cords, and to other equipment with rotating or moving parts shall be liquid-tight flexible metal conduit with watertight connectors installed without sharp bends and in the minimum lengths required for the application, but not longer than 6 feet unless otherwise acceptable to Engineer.

e. Not Used.

f. Exposed conduit shall be installed either parallel or perpendicular to structural members and surfaces.

g. Two or more conduits in the same general routing shall be parallel, with symmetrical bends.

h. Conduits shall be at least 6 inches from high temperature piping, ducts, and flues.

i. Conduit installed in corrosive chemical feed and storage areas as indicated by Area Type on the Drawings shall be rigid Schedule 80 PVC. Exposed conduit in corrosive areas shall be supported by FRP framing materials with stainless steel hardware, including nuts and bolts.

j. Rigid Schedule 40 and 80 PVC conduit shall have supports and provisions for expansion as required by NEC Article 352.

k. Metallic conduit connections to stainless steel enclosures shall be securely fastened by stainless steel locknuts inside and outside.

l. Rigid Schedule 40 and 80 PVC conduit shall be secured to sheet metal device boxes using a male terminal adapter with a locknut inside or by using a box adapter inserted through the knockout and cemented into a coupling.

m. Conduits in walls or slabs, which have reinforcement in both faces, shall be installed between the reinforcing steel. In slabs

with only a single layer of reinforcing steel, conduits shall be placed under the reinforcement. Conduits larger than 1/3 of the slab thickness shall be concrete encased under the slab.

n. Conduits that cross structural joints where structural movement is allowed shall be fitted with concrete-tight and watertight expansion/deflection couplings, suitable for use with metallic conduits and rigid Schedule 40 or 80 PVC conduits. The couplings shall be Appleton Type DF, Crouse-Hinds Type XD, or O-Z Type DX.

o. Conduit shall be clear of structural openings and indicated future openings.

p. Conduits through roofs or metal walls shall be flashed and sealed watertight.

q. Conduit installed through any openings cut into non-fire rated concrete or masonry structure elements shall be neatly grouted. Conduit penetrations of fire rated structure elements shall be sealed in a manner that maintains the fire ratingas indicated on the Architectural Drawings.

r. Conduits shall be capped during construction to prevent entrance of dirt, trash, and water.

s. Exposed conduit stubs for future use shall be terminated with galvanized pipe caps.

t. Concealed conduit for future use shall be terminated in equipment or fitted with couplings plugged flush with structural surfaces.

u. Where the Drawings indicate future duplication of equipment wired hereunder, concealed portions of conduits for future equipment shall be provided.

v. Horizontal conduit shall be installed to allow at least 7 feet of headroom, except along structures, piping, and equipment or in other areas where headroom cannot be maintained.

w. Conduit shall not be routed across the surface of a floor, roof, or walkway unless approved by Engineer.

x. PVC-coated rigid steel conduit shall be threaded and installed as recommended by the conduit manufacturer's installation procedure using appropriate tools.

y. All conduits that enter enclosures shall be terminated with acceptable fittings that will not affect the NEMA rating of the enclosure.

z. Conduit which turns out of concrete slabs or walls, shall be connected to a 90-degree elbow of PVC-coated rigid steel

conduit before it emerges. Conduits shall have PVC-coated rigid steel coupling embedded a minimum of 3 inches when emerging from slabs or walls and the coupling shall extend 2 inches from the wall.

aa. Conduit for Heliax type foam dielectric coaxial cable shall be installed as follows:

Heliax Size inches	Minimum Conduit Size inches	Minimum Conduit Bend Radius inches
1/2	1-1/2	10

ab. Power conductors to and from adjustable frequency drives shall be installed in steel conduit.

3-7.02. Underground Conduit Installation. All excavation, backfilling, and concrete work shall conform to the respective sections of these Specifications. Underground conduit shall conform to the following requirements:

a. All underground conduits shall be concrete encased unless indicated otherwise on the Drawings. Concrete encasement within 15 feet of building entrances, under and within 5 feet of roadways, and within 10 feet of indicated future excavations shall be reinforced as detailed on the Drawings.

b. Concrete encased conduit shall be schedule 40 PVC. Conduits shall have PVC-coated rigid steel coupling embedded a minimum of 3 inches when emerging from walls and the coupling shall extend 2 inches from the wall. All PVC joints shall be solvent welded in accordance with the recommendations of the manufacturer.

c. Concrete encasement on exposed outdoor conduit risers shall continue to 6 inches above grade, with top crowned and edges chamfered.

d. Conduit and concrete encasement installed underground for future extension shall be terminated flush at the bulkhead with a coupling and a screw plug. The termination of the duct bank shall be reinforced with bars 100 diameters long that shall be terminated 2 inches from the bulkhead. Matching splice bars shall be 50 bar diameters long. Each longitudinal bar shall be provided with a Lenton "Form Saver" coupler and plate or a Dayton "Superior DBR" coupler at the bulkhead. The coupler shall be threaded to accept a dowel of like diameter in the future. Threads shall be protected with screw-in plastic caps. A 1-3/4 by 3/4 inch deep horizontal shear key shall be formed in the concrete encasement above and below the embedded conduits.

After concrete placement, conduit and bar connector ends shall be cleaned and coated with two coats of thixotropic coal tar.

e. Underground conduits indicated not to be concrete encased shall be rigid Schedule 40 PVC.

f. Underground conduit bend radius shall be at least 2 feet at vertical risers and at least 3 feet elsewhere.

g. Underground conduits and conduit banks shall have at least 2 feet of earth cover, except where indicated otherwise.

h. Underground conduit banks through building walls shall be cast in place, or concreted into boxouts, with water stops on all sides of the boxout. Water stops are specified in the Cast-In-Place Concrete section.

i. Underground nonmetallic conduits, which turn out of concrete or earth in outdoor locations, shall be connected to 90 degree elbows of PVC-coated rigid steel conduit before they emerge.

j. Conduits not encased in concrete and passing through walls, which have one side in contact with earth, shall be sealed watertight with special rubber-gasketed sleeve and joint assemblies or with sleeves and modular rubber sealing elements.

k. Underground conduits shall be sloped to drain from buildings to manholes.

l. Not used.

m. Not used.

n. Intercommunication and instrument cables shall be separated the maximum possible distance from all power wiring in pull-boxes, manholes, and handholes.

3-7.03. Sealing of Conduits. After cable has been installed and connected, conduit ends shall be sealed by forcing nonhardening sealing compound into the conduits to a depth at least equal to the conduit diameter. This method shall be used for sealing all conduits at handholes, manholes, and building entrance junction boxes, and for 1 inch and larger conduit connections to equipment.

Conduits entering chlorine feed and storage rooms shall be sealed in a junction box or conduit body adjacent to the point of entrance.

Conduits entering hazardous (classified) areas and submersible or explosion proof enclosures shall have Appleton "Type ESU" or Crouse-Hinds "EYS" sealing fittings with sealing compound.

3-7.04. Reuse of Existing Conduits. Existing conduits shall not be reused.

3-7.05. Cable Tray Installation. Not used.

3-8. WIRING DEVICES, BOXES, AND FITTINGS INSTALLATION. Metallic and nonmetallic conduit boxes and fittings shall be installed in the following locations:

3-8.01. Conduit Boxes and Fittings.

a. Stainless steel, threaded boxes and fittings shall be installed in concrete walls, ceilings, and floors; in the outdoor faces of masonry walls; and in all locations where weatherproof device covers are required. These boxes and fittings shall also be installed in exposed rigid steel and intermediate metal conduit systems.

b. Not Used.

c. Rigid PVC device boxes shall be installed in exposed nonmetallic conduit systems.

d. PVC coated boxes and fittings shall be installed in PVC coated conduit systems.

e. Not Used.

3-8.02. Device Plates. Oversized plates shall be installed where standard-sized plates do not fully cover the wall opening.

3-8.03. Wall Switches.

a. Wall switches shall be mounted 3'-6" above floor or grade.

b. After circuits are energized, all wall switches shall be tested for proper operation.

3-8.04. Receptacles.

a. Convenience outlets shall be 18 inches above the floor unless otherwise required.

b. Convenience outlets outdoors and in garages; in basements, shops, storerooms, and rooms where equipment may be hosed down; shall be 4 feet above floor or grade.

c. Welding receptacles shall be surface-mounted 4 feet above the floor.

d. After circuits are energized, each receptacle shall be tested for correct polarity and each GFCI receptacle shall be tested for proper operation.

e. Conduit and wire for convenience outlet installation is not shown on the Drawings and shall be sized, furnished, and installed by Contractor. Conductors shall be minimum 12 AWG and conduit shall be minimum 3/4 inch for convenience outlet installation.

3-8.05. Special Outlets. Not used.

3-9. EQUIPMENT INSTALLATION. Except as otherwise specified or indicated on the Drawings, the following procedures shall be used in performing electrical work.

3-9.01. Setting of Equipment. All equipment, boxes, and gutters shall be installed level and plumb. Boxes, equipment enclosures, metal raceways, and similar items mounted on water- or earth-bearing walls shall be separated from the wall by at least 1/4 inch thick corrosion-resistant spacers. Where boxes, enclosures, and raceways are installed at locations where walls are not suitable or available for mounting, concrete equipment pads, framing material, and associated hardware shall be provided.

3-9.02. Sealing of Equipment. All outdoor substation, switchgear, motor control center, and similar equipment shall be permanently sealed at the base, and all openings into equipment shall be screened or sealed with concrete grout to keep out rodents and insects the size of wasps and mud daubers. Small cracks and openings shall be sealed from inside with silicone sealant, Dow-Corning "795" or General Electric "SCS1200".

3-10. GROUNDING.

3-10.01. General. The electrical system and equipment shall be grounded in compliance with the National Electrical Code and the following requirements:

a. All ground conductors shall be at least 12 AWG soft drawn copper cable or bar, bare or green-insulated in accordance with the National Electrical Code.

b. Ground cable splices and joints, ground rod connections, and equipment bonding connections shall meet the requirements of IEEE 837, and shall be exothermic weld connections or irreversible high-compression connections, Cadweld "Exothermic" or Burndy "Hyground". Mechanical connectors will not be acceptable. Cable connections to bus bars shall be made with high-compression two-hole lugs.

c. Ground cable through exterior building walls shall enter within 3 feet below finished grade and shall be provided with a water stop. Unless otherwise indicated, installation of the water stop shall include filling the space between the strands with solder and soldering a 12 inch copper disc over the cable.

d. Ground cable near the base of a structure shall be installed in earth and as far from the structure as the excavation permits, but not closer than 24 inches . The tops of ground rods and ground cable interconnecting ground rods shall be buried a minimum of 30 inches below grade, or below the frost line, whichever is deeper.

e. All powered equipment, including lighting fixtures and receptacles, shall be grounded by a copper ground conductor in addition to the conduit connection.

f. Ground connections to equipment and ground buses shall be made with copper or high conductivity copper alloy ground lugs or clamps. Connections to enclosures not provided with ground buses or ground terminals shall be made with irreversible high-compression type lugs inserted under permanent assembly bolts or under new bolts drilled and inserted through enclosures, other than explosion proof enclosures, or by grounding locknuts or bushings. Ground cable connections to anchor bolts; against gaskets, paint, or varnish; or on bolts holding removable access covers will not be acceptable.

g. The grounding system shall be bonded to the station piping by connecting to the first flange inside the building, on either a suction or discharge pipe, with a copper bar or strap. The flange shall be drilled and tapped to provide a bolted connection.

h. Ground conductors shall be routed as directly as possible, avoiding unnecessary bends. Ground conductor installations for equipment ground connections to the grounding system shall have turns with minimum bend radii of 12 inches .

i. Ground rods not described elsewhere shall be a minimum of 3/4 inch in diameter by 10 feet long, with a copper jacket bonded to a steel core.

j. Test wells and covers for non-traffic areas shall be molded high density polyethylene. Test wells for traffic areas shall be precast concrete construction rated for traffic duty with concrete or cast iron covers.

3-10.02. Grounding System Resistance. The grounding system design depicted on the Contract Drawings is the minimum design required for each building or structure. Each system shall comply with the maximum resistance of 5 ohms to ground. Contractor shall confirm the system grounding resistance with the results of the testing specified herein. Systems exceeding the maximum resistance specified shall be supplemented with additional grounding provisions and retested until the maximum specified resistance is achieved.

3-10.03. Grounding System Testing. The grounding system of each new building or structure and each existing building or structure indicated below, shall

be tested to determine the resistance to earth. Testing shall be performed by an independent electrical or grounding system testing organization. Testing shall be completed after not less than three full days without precipitation and without any other moistening or chemical treatment of the soil.

3-10.03.01. New Grounding Systems. The grounding system of each new structure shall be tested for resistance to earth utilizing the three-point fall of potential test as defined by IEEE 81. Testing shall be completed prior to installation of the electrical distribution equipment to ensure the grounding system is isolated from the utility grounding system and the systems of other structures. The current source probe for the test shall be placed in soil at a distance of 5 to 10 times the distance of the widest measurement across the grounding system ring or grid to ensure adequate measurements outside of the grounding system's sphere of influence. Test probe measurements shall be taken at a distance of one foot from the grounding system reference connection and at each 10 percent increment from the grounding system reference connection to the current source probe location. Test results shall be documented on a graphical plot with resistance in ohms on the vertical axis and distance in feet on the horizontal axis. The results shall clearly indicate a system resistance plateau which confirms a valid test procedure.

3.10.03.02. Existing Grounding Systems. Not used.

3.10.03.03. Grounding System Test Report. A report certified by the testing organization shall be prepared and submitted in accordance with the Submittal Procedures section. The final report shall include complete testing results for each building or structure, graphical representation of the test point results for the three-point fall of potential method, and complete observations of all site weather conditions and other environmental conditions that may affect the test results. Final acceptance of the results reported shall be subject to the review and approval of Engineer.

3-11. LIGHTING FIXTURE INSTALLATION. The Drawings indicate the general locations and arrangements of the lighting fixtures. Fixtures in rows shall be aligned both vertically and horizontally unless otherwise specified. Fixtures shall be clear of pipes, mechanical equipment, structural openings, indicated future equipment and structural openings, and other obstructions.

Conduit and wire for lighting fixture installation is not shown on the Drawings and shall be sized, furnished and installed by Contractor. Circuits to emergency lighting units, exit signs, and fixtures indicated to be night lights shall not be switched. Circuits to lighting fixtures indicated to have emergency battery packs shall include an additional un-switched hot conductor. Conductors shall be minimum 12 AWG and conduit shall be minimum 3/4 inch for lighting fixture installation.

3-12. POWER FACTOR CORRECTION CAPACITOR INSTALLATION. Not used.

3-13. HEAT-TRACED PIPING INSTALLATION. Not used.

3-14. MODIFICATIONS TO EXISTING EQUIPMENT. Not used.

End of Section

STANDARD SPECIFICATIONS

REFERENCE: ICEA S-95-658 (NEMA WC 70).

CONDUCTOR: Concentric-lay, uncoated copper; strand Class B. Wet/dry maximum operating temperature 90°C.

INSULATION: Cross-linked thermosetting polyethylene, ICEA S-95-658, Paragraph 3.6.

SHIELD: None.

JACKET: None.

FACTORY TESTS: Cable shall meet the requirements of ICEA S-95-658.

Cable Details

Size		Number of Strands	Conductor Insulation Thickness*		Maximum Outside Diameter	
AWG or kcmil	**mm²**		**in.**	**μm**	**in.**	**mm**
14	2.5	7	0.030	760	0.17	4.32
12	4.0	7	0.030	760	0.19	4.83
10	6.0	7	0.030	760	0.21	5.33
8	10.0	7	0.045	1140	0.27	6.86
6	16.0	7	0.045	1140	0.31	7.87
4	25.0	7	0.045	1140	0.36	9.14
2	35.0	7	0.045	1140	0.42	10.67
1	40.0	19	0.055	1400	0.48	12.19
1/0	50.0	19	0.055	1400	0.52	13.21
2/0	70.0	19	0.055	1400	0.57	14.48
4/0	95.0	19	0.055	1400	0.68	17.27
250	120.0	37	0.065	1650	0.75	19.05
350	185.0	37	0.065	1650	0.85	21.59
500	300.0	37	0.065	1650	0.98	24.89
750	400.0	61	0.080	2030	1.22	31.00
1,000	500.0	61	0.080	2030	1.37	34.80

*The average thickness shall be not less than that indicated above. The minimum thickness shall be not less than 90 percent of the values indicated above.

A durable marking shall be provided on the surface of the cable at intervals not exceeding 24 inches (600 mm). Marking shall include manufacturer's name, XLP, XHHW-2, conductor size, and voltage class.

600 Volt, Single Conductor Lighting/Power Cable (600-1-XLP-NONE-XHHW-2)

BLACK & VEATCH	Cable Data	Figure 2-16050

STANDARD SPECIFICATIONS

REFERENCE: UL 66, UL 1277.

CONDUCTOR: 16 AWG (1.5 mm^2), 7-strand, concentric-lay, uncoated copper. Maximum operating temperature 90°C dry, 75°C wet.

INSULATION: Polyvinyl chloride, not less than 15 mils (380 μm) average thickness; 13 mils (330 μm) minimum thickness, UL 66, Type TFN.

LAY: Twisted pair with 1-1/2 inch to 3 inch (38.10 mm - 63.5 mm) lay.

SHIELD: Cable assembly, combination aluminum-polyester tape and 7-strand, 20 AWG (0.5 mm^2) minimum size, tinned copper drain wire, shield applied to achieve 100 percent cover over insulated conductors.

JACKET: Conductor: Nylon, 4 mils (100 μm) minimum thickness, UL 66.

Cable assembly: Black, flame-retardant polyvinyl chloride, UL 1277, applied over tape-wrapped cable core.

CONDUCTOR IDENTIFICATION: One conductor black, one conductor white.

FACTORY TESTS: Insulated conductors shall meet the requirements of UL 66 for Type TFN. Assembly jacket shall meet the requirements of UL 1277. Cable shall meet the vertical-tray flame test requirements of UL 1277.

Cable Details

	Assembly Jacket Thickness*		Maximum Outside Diameter	
	in.	**μm**	**in.**	**mm**
Single Pair	0.045	1140	0.34	8.64

*The average thickness shall be not less than that indicated above. The minimum thickness shall be not less than 80 percent of the value indicated above.

A durable marking shall be provided on the surface of the cable at intervals not exceeding 24 inches (600 mm). Marking shall include manufacturer's name, Type TC, Type TFN, conductor size, single pair, and voltage class.

600 Volt, Single Pair, Shielded Instrument Cable (600-SINGLE-PAIR-SH-INSTR)

BLACK & VEATCH	Cable Data	Figure 4-16050

Section 16100

ELECTRICAL EQUIPMENT INSTALLATION

PART 1 - GENERAL

1-1. SCOPE. This section covers the installation of electrical equipment.

1-2. GENERAL. Equipment specified to be installed under this section shall be erected, and placed in proper operating condition in full conformity with Drawings, Specifications, engineering data, instructions, and recommendations of the equipment manufacturer, unless exceptions are noted by Engineer.

The electrical equipment identified as being provided by others will be furnished complete for installation by Contractor. Technical specifications under which the equipment will be purchased are available.

1-2.01. Coordination. When manufacturer's field services are provided by the equipment manufacturer, Contractor shall coordinate the services with the equipment manufacturer. Contractor shall give Engineer written notice at least 14 days prior to the need for manufacturer's field services furnished by others.

Submittals for equipment furnished under the original procurement contract will be furnished to Contractor upon completion of review by Engineer. Contractor shall review equipment submittals and coordinate with the requirements of the Work and the Contract Documents. Contractor accepts sole responsibility for determining and verifying all quantities, dimensions, and field construction criteria.

1-3. DELIVERY, STORAGE, AND HANDLING.

1-3.01. Delivery. When sills are required for electrical equipment, they shall be shipped ahead of the scheduled equipment delivery to permit installation before concrete is placed.

1-3.02. Storage. Upon delivery, all equipment and materials shall immediately be stored and protected by Contractor in accordance with Product Storage and Handling Requirements section, and in accordance with manufacturer's written instructions, until installed in the Work. Equipment shall be protected by Contractor against damage and exposure from the elements. At no time shall the equipment be stored on earth or grass surfaces or come in contact with earth or grass. Contractor shall keep the equipment clean and dry at all time. Openings shall be plugged or capped (or otherwise sealed by packaging) during temporary storage.

1-3.03. Handling. Electrical equipment shall be moved by lifting, jacking, or skidding on rollers as described in the manufacturer's instructions. Special lifting harness or apparatus shall be used when required. Lifting and jacking points shall be used when identified on the equipment. Contractor shall have required unloading equipment on site to perform unloading work on the date of equipment delivery.

PART 2 - PRODUCTS Not used.

PART 3 - EXECUTION

3-1. INSTALLATION, TESTING, AND COMMISSIONING. All installation work shall be in accordance with manufacturer's written instructions.

All material, equipment, and components specified to be installed according to this section shall be installed, tested, and commissioned for operation in compliance with NECA 1000 – NEIS Specification System. Where required in NECA 1000, testing and commissioning procedures shall be followed prior to energizing equipment.

Electrical equipment cubicles and vertical sections shall be installed plumb and level. Draw-out equipment carriages, circuit breakers, and other removable components shall operate free and easy without binding or distortion.

Unless otherwise indicated or specified, all indoor floor-mounted electrical equipment and control cabinets shall be installed on concrete equipment pads four inches in height.

Indoor metalclad switchgear shall be bolted to steel floor channels which are installed level and flush with the top of the concrete floor or equipment pad.

Outdoor metalclad switchgear and interrupter gear with integral floor channels or beams shall be secured to concrete pads with anchor bolts and clips.

Motor control centers with integral floor sills shall be secured to concrete floors or equipment pads with anchor bolts.

Adequate bracing shall be provided for seismic forces. The bracing shall be designed to meet the requirements of the Meteorological and Seismic Design Criteria section.

3-1.01. Cleaning. All deposits of oil, grease, mud, dirt or debris shall be cleaned from the electrical equipment following installation and field wiring. A detergent

water based solution, or other liquid cleaners not harmful to material or equipment finishes, shall be used as recommended by the manufacturer.

End of Section

THIS PAGE LEFT BLANK INTENTIONALLY

Section 16220

COMMON MOTOR REQUIREMENTS FOR PROCESS EQUIPMENT

PART 1 – GENERAL

1-1. SCOPE. This section covers single and three-phase, small (fractional) and medium (integral) horsepower, alternating current motors rated 500 horsepower and less (NEMA MG1).

Motors shall be designated and coordinated with the driven equipment and shall be located as indicated on the Drawings.

1-2. GENERAL. Motors furnished under driven equipment Specification sections shall be fabricated and assembled in full conformity with Drawings, Specifications, engineering data, instructions, and recommendations of the equipment manufacturer unless exceptions are noted by the Engineer.

Where applicable, individual motor data sheets have been developed which specify additional requirements for specific motors.

1-2.01. General Equipment Stipulations. The General Equipment Stipulations section shall apply to all motors, unless otherwise specified. If requirements in this section differ from those in the General Equipment Stipulations section, the requirements specified herein shall take precedence.

1-2.02. Seismic Design Requirements. Seismic design requirements for products specified herein shall be as indicated in the Meteorological and Seismic Design Criteria section.

1-2.03. Governing Standards. Motors furnished under this section shall be designed, constructed, and tested in accordance with the latest version of NEMA MG 1, NEMA MG 10, and IEEE 112, Test Method B.

1-2.04. Nameplates. All motor nameplate data shall conform to NEMA MG 1 requirements.

1-3. SUBMITTALS. Complete assembly, foundation, and installation drawings, together with complete engineering data covering the materials used, parts, devices, and accessories forming a part of the motor shall be submitted in accordance with the Submittals Procedures section. The drawings and data shall include, but shall not be limited to, the following:

Motors

Name of manufacturer.

Type and model.
Type of bearing and method of lubrication.
Rated size of motor, hp [kW], and service factor.
Temperature rise and insulation rating.
Full load rotative speed.
Net weight.
Efficiency at full, 3/4, and 1/2 load.
Full load current.
Locked rotor current.
Space heater wattage, where applicable.
Motor temperature switch data, where applicable.
Motor Shaft Grounding Ring data, where applicable.
RTD data, where applicable.

Seismic Design Requirements

Confirmation of compliance with the requirements of the Meteorological and Seismic Design Criteria section.

1-4. OPERATION AND MAINTENANCE DATA AND MANUALS. Adequate operation and maintenance information shall be supplied. Operation and maintenance manuals shall be submitted in accordance with the Submittals Procedures section.

Operation and maintenance manuals shall include the following:

a. Assembly, installation, alignment, adjustment, and checking instructions.

b. Lubrication and maintenance instructions.

c. Guide to troubleshooting.

d. Parts lists and predicted life of parts subject to wear.

e. Outline, cross-section, and assembly drawings; engineering data; and wiring diagrams.

f. Test data and performance curves, where applicable.

PART 2 - PRODUCTS

2-1. SERVICE CONDITIONS. Service conditions for motors shall be as specified in the driven equipment Specification sections. Motors shall be designed for special conditions such as area classification, altitude, frequent starting, intermittent overload, high inertia, mounting configuration, or service environment. Where site elevation and ambient temperature is not specified in

the driven equipment Specification sections, the motors shall be designed for the following.

Site elevation	Below 3,300 ft
Ambient temperature	86 °F

Unless specified otherwise, all motors shall be designed for full voltage starting and to operate from an electrical system that may have a maximum of 5 percent voltage distortion according to IEEE 519.

Motors utilizing a reduced-voltage, autotransformer starter shall be capable of reduced-voltage starting at a 65 percent tap setting.

Motors utilizing a reduced voltage solid state starter shall be capable of starting at 50% of the specified voltage.

When powered from an adjustable frequency drive (AFD), motors shall be inverter duty and specifically selected for service wth an adjustable frequency type speed controller and shall be de-rated as required to compensate for harmonic heating effects and reduced self-cooling capability at low speed operation. Each motor shall not exceed a Class B temperature rise when operating in the installed condition at load with power received from the adjustable frequency drive. All motors driven by AFDs shall be supplied with full phase insulation on the end turns and shall meet the requirements of NEMA MG 1, Part 31. In addition to the requirements of NEMA MG 1, Part 31, motors shall be designed to be continually pulsed at the motor terminals with a voltage of 1600 volts ac.

The number of starts per hour for motors shall be rated for the load cycling requirements of NEMA MG 10.

2-2. PERFORMANCE AND DESIGN REQUIREMENTS. Unless otherwise specified in the attached motor data sheet(s), design and construction of each general-purpose motor shall be as specified herein. Motor voltage, frequency, speed, service factor, and insulation class shall be as follows.

Motor voltage.	460, 3 phase for ½ horsepower and larger, 120, single phase for smaller than ½ horsepower
Frequency.	60 Hz
Speed.	Constant speed
Service factor.	
Insulation class and temperature rise above 40° C design ambient (by resistance method.	Class H with 105° C rise at 1.0 SF

Enclosure.	Totally enclosed fan cooled
Main conduit box sized to include.	Main motor leads and space heater leads where space heaters are specified

2-2.01. Nameplate Horsepower. Motor nameplate horsepower shall be equal to or greater than the maximum load imposed by the driven equipment.

2-2.02. Enclosures. All motors shall be self-ventilated. All self-ventilated open type motors, including those with drip-proof, splash-proof, and weather protected enclosures, and the fan covers of totally enclosed fan cooled motors shall meet NEMA MG 1 requirements for a fully guarded machine.

2-2.02.01. Totally Enclosed Motors. Totally enclosed motors shall be furnished with drain holes and rotating shaft seals. Frames, bearing brackets, external terminal housings, and fan covers for fan cooled motors shall be cast iron. External cooling fans for fan cooled motors shall be fabricated of brass, bronze, aluminum alloy containing not more than 0.2 percent copper, malleable iron, or plastic. All plastic fans shall be fabricated of a reinforced thermosetting plastic and shall be UL approved.

2-2.02.02. Outdoor Motors. Outdoor motors shall have NEMA weather protected enclosures. All exposed metal surfaces shall be protected, where practical, with a corrosion resistant polyester coating. Exposed uncoated surfaces shall be of a corrosion resistant metal. Enclosure exterior and interior surfaces, air gap surfaces, and windings shall be protected with a corrosion resistant polyester, polyurethane or epoxy coating.

2-2.02.03. Motors for Hazardous Locations. Motors for hazardous locations shall be in accordance with the NEC and of the correct type enclosures for the particular service as specified in NEMA MG 1. Motors shall meet the requirements of UL 674.

2-2.02.04. Encapsulated Windings. Where specified in the motor data sheet(s), motors shall be provided with encapsulated windings meeting the requirements of NEMA MG1-1.27.2.

2-2.02.05. Severe Duty Chemical Service Motors. Where specified in the motor data sheet(s), motors shall be provided with special corrosion-resistant finish and encapsulated windings meeting the requirements of NEMA MG1-1.27.2 and IEEE 841.

2-2.03. Main Conduit Boxes. The main conduit box shall be in accordance with NEMA MG 1. The main conduit boxes shall be diagonally split for easy access to

the motor leads, and designed for rotation in 90-degree increments. A gasket shall be furnished between the halves of the box. Conduit openings in the main conduit box shall match the size and quantity of conduits indicated on the one line Drawings.

The main conduit box shall be oversized at least one size larger than NEMA standard. The main conduit box shall be sized for all indicated accessory leads.

Motors furnished in NEMA 320 frame series and larger shall have conduit boxes designed and constructed to permit motor removal after installation without disconnecting raceways.

2-2.04. Leads. Motor power leads shall be wired into the main conduit box. Unless otherwise specified, space heater leads shall be wired into the main conduit box. All motor leads and their terminals shall be permanently marked in accordance with the requirements of NEMA MG 1, Part 2. Each lead marking shall be visible after taping of the terminals.

All motors rated 100 horsepower and larger, and all vertical motors shall have the direction of rotation marked by an arrow mounted visibly on the stator frame near the terminal housing, or on the nameplate, and the leads marked for phase sequence T1, T2, T3, to correspond to the direction of rotation and supply voltage sequence.

Leads for dual-voltage rated or for multispeed motors shall be easily connected or reconnected in the main conduit box for the operating voltage or for the specified speeds. Permanent instructions for making these connections shall be furnished inside the main conduit box or on the motor frame or nameplate.

2-2.05. Terminals. Cable type leads shall be provided with Burndy Type YA or acceptable equal compression type connectors.

2-2.06. Grounding Connections. All motors shall be furnished with a ground connection.

2-2.07. Bearings. All bearings shall be self-lubricating, shall have provisions for relubrication, and shall be designed to operate in any position or at any angle.

Motor bearings shall be antifriction type with L_{10} life rating of 40,000 hours in accordance with ABMA Standards.

All bearing mountings shall be designed to prevent the entrance of lubricant into the motor enclosure or dirt into the bearings, and shall be fitted with pipes, drain plugs, and fittings arranged for safe, easy relubrication from the outside of the motor while the motor is in service, as necessary.

2-2.07.01. Insulated Bearings. Motors over 100 horsepower controlled by an adjustable frequency drive shall be furnished with one insulated bearing. The insulated bearing shall be installed on the non-drive end of the motor.

2-2.08. Rotors. All induction motors shall have squirrel-cage rotors adequately sized to avoid overheating during acceleration of the motor and driven equipment. Rotors shall be dynamically balanced to 0.08 in./sec or less.

2-2.09. Shafts. Shafts shall be furnished with corrosion resistant treatment or shall be of a corrosion resistant material.

2-2.10. Torque Characteristics. Motors rated 200 horsepower and less shall have torques and locked-rotor current in accordance with NEMA MG 1, Part 12.

2-2.11. Motor Space Heaters. Not used.

2-2.12. Temperature Sensing Devices. Each motor shall be furnished with at least one automatic reset winding temperature switch per phase. Temperature switch contacts shall be normally closed and rated 5 amps at 120 volts ac. The contacts shall be wired in series with the end leads brought out to the motor terminal box.

An auxiliary conduit box shall be provided for termination of temperature switch wiring.

2-2.13. Motor Shaft Grounding Ring. Not used.

2-2.14. Assembly. All motors shall be completely assembled with the driven equipment, lubricated, and ready for operation.

2-2.15. Efficiency. Unless otherwise specified in the attached motor data sheet(s), motors shall be premium efficiency type and shall have a NEMA nominal efficiency nameplate value equal to or greater than values indicated in the following table. Efficiency shall be determined in accordance with IEEE 112, Test Method B.

Vertical motors shall have efficiency values equal to or greater than those indicated in the following table minus 0.50.

Motor		Nominal Efficiency Values	Nominal Efficiency Values
kW	hp	Open Drip Enclosure	TEFC Enclosure

		3600 rpm	1800 rpm	1200 rpm	900 rpm	3600 rpm	1800 rpm	1200 rpm	900 rpm
0.7	1	84.0	85.5	82.5	75.0	77.0	85.5	82.5	75.5
1.1	1.5	84.0	86.5	86.5	78.0	84.0	86.5	87.5	80.0
1.5	2	85.5	86.5	87.5	86.5	85.5	86.5	88.5	85.5
2.2	3	85.5	89.5	88.5	89.5	87.0	89.5	89.5	86.5
3.7	5	86.5	89.5	89.5	89.5	88.5	89.5	89.5	85.5
5.6	7.5	88.5	91.0	90.2	88.5	90.0	91.7	91.0	86.5
7.5	10	89.5	91.7	91.7	91.0	91.0	91.7	91.0	91.0
11.2	15	90.2	93.0	91.7	91.0	91.0	92.4	92.0	91.0
14.9	20	91.7	93.0	92.4	92.0	92.0	93.0	92.0	91.0
18.7	25	92.4	93.6	93.0	92.0	92.0	93.6	93.0	91.0
22.4	30	93.0	94.1	93.6	93.0	92.4	93.6	93.0	93.0
29.8	40	93.0	94.1	94.1	93.0	92.4	94.1	94.1	93.0
37.3	50	93.0	94.5	94.1	93.0	93.0	94.5	94.1	93.0
44.8	60	93.6	95.0	94.5	94.0	93.6	95.0	94.5	93.0
56	75	94.0	95.0	95.0	94.0	93.6	95.4	95.0	94.0
74.6	100	94.5	95.4	95.0	95.0	94.1	95.4	95.0	94.0
93.2	125	95.0	95.4	95.0	95.0	95.0	95.4	95.0	94.0
112	150	95.0	95.8	95.4	95.0	95.0	95.8	95.8	94.0
149	200	95.4	95.8	95.4	95.0	95.4	96.2	95.8	94.1
186	250	95.0	95.8	95.4	95.0	95.8	96.2	95.8	94.5
224	300	95.4	95.8	95.4		95.8	96.2	95.8	
261	350	95.4	95.8	95.4		95.8	96.2	95.8	
298	400	95.8	95.8	95.8		95.8	96.2	95.8	
336	450	95.8	96.2	96.2		95.8	96.2	95.8	

Motor		Nominal Efficiency Values				Nominal Efficiency Values			
kW	hp	Open Drip Enclosure				TEFC Enclosure			
		3600 rpm	1800 rpm	1200 rpm	900 rpm	3600 rpm	1800 rpm	1200 rpm	900 rpm
373	500	95.8	96.2	96.2		95.8	96.2	95.8	

2-3. ACCESSORIES.

2-3.01. Special Tools and Accessories. Motors requiring periodic repair and adjustment shall be furnished complete with all special tools, instruments, and accessories required for proper maintenance. Each motor shall be provided with lifting eyebolts or lugs and appropriate fittings for adding bearing lubricant. Grease lubricated units shall be provided with a means of venting the casing. Oil lubricated units shall be provided with constant level oilers or with sight glasses arranged to indicate operating and static oil levels.

2-4. ANCHORS. Contractor shall furnish suitable anchors for each item of equipment as required for driven equipment.

2-5. BALANCE. All rotating parts shall be accurately machined and shall be in as nearly perfect rotational balance as practicable. Excessive vibration shall be sufficient cause for rejection of the equipment. The mass of the unit and its distribution shall be such that resonance at normal operating speeds is avoided. In any case, the unfiltered vibration displacement (peak-to-peak), as measured at any point on the machine, shall not exceed the limits as required by NEMA MG 1. At any operating speed, the ratio of rotative speed to the critical speed of a unit or its components shall be less than 0.8 or more than 1.3.

PART 3 - EXECUTION

3-1. INSTALLATION. Each motor shall be installed in accordance with the Equipment Installation section.

End of Section

THIS PAGE LEFT BLANK INTENTIONALLY

Section 16491

BYPASS-ISOLATION AUTOMATIC TRANSFER SWITCH

PART 1 - GENERAL

1-1. SCOPE. This section covers both indoor and outdoor automatic transfer switches, and bypass-isolation automatic transfer switches, which shall be furnished, and tested as specified and as indicated on the Drawings.

Automatic transfer switch equipment shall meet the design conditions and features.

Automatic transfer switch equipment shall be designated and located as follows:

Tag number(s).	ATS
Transfer switch designation(s).	Automatic Transfer Switch
Location of transfer switch(s).	Generator Platform

1-2. GENERAL. Equipment furnished and installed under this section shall be fabricated, assembled, erected, and placed in proper operating condition in full conformity with the Drawings, Specifications, engineering data, instructions, and recommendations of the equipment manufacturer, unless exceptions are noted by Engineer.

1-2.01. General Equipment Stipulations. The General Equipment Stipulations section shall apply to all equipment furnished under this section. If stipulations in this section differ from those in the General Equipment Stipulations section, the requirements specified herein shall take precedence.

1-2.02. Seismic Design Requirements. Seismic design requirements for products specified herein shall be as indicated in the Meteorological and Seismic Design Criteria section.

1-2.03. Dimensional Restrictions. Layout dimensions will vary between manufacturers and the layout area indicated on the Drawings is based on typical values. Contractor shall review the Contract Drawings, the manufacturer's layout drawings and installation requirements, and make any modifications required for proper installation subject to acceptance by Engineer.

1-2.04. Workmanship and Materials. Equipment supplier shall guarantee all equipment against faulty or inadequate design, improper assembly or erection, defective workmanship or materials, and leakage, breakage, or other failure. Materials shall be suitable for service conditions.

1-2.05. Governing Standards. The equipment furnished under this section shall be designed, constructed, and tested in accordance with the following standards:

UL 1008;
NFPA 110;

The equipment shall also conform to all the applicable standards of ANSI, IEEE, NEMA, UL, and NFPA 70.

The automatic transfer switch shall be UL listed for use in standby power systems in accordance with Article 702, Optional Standby Systems, of the National Electrical Code.

1-2.06. Nameplates. Nameplates with designation of each control or indicating device shall be mounted on the switch enclosure. Nameplates shall be white and black laminated phenolic material of suitable size, and shall be engraved with 3/4 inch high letters for section identity and 1/8 inch letters for other information. The engraving shall extend through the white exterior lamination to the black center.

Each control device and each control wire terminal block connection inside the units shall be identified with a permanent nameplate or painted legend to match the identification on the manufacturer's wiring diagram.

1-2.07. System Characteristics. The equipment will be connected to a power system with characteristics as specified below:

Voltage, phase	480V, 3-phase
Frequency	60 Hz
Number of conductors	3-wire

1-3. SUBMITTALS. Complete assembly, foundation, and installation drawings, together with complete engineering data covering the materials used, parts, devices, and accessories forming a part of the transfer switch, shall be submitted in accordance with the Submittal Procedures section. The drawings and data shall include, but shall not be limited to, the following:

Drawings showing front and side views, plan, and weight.
Rating and specifications.
Circuit breaker time-current characteristic curves, if applicable.
Single-line, control schematic, and wiring connection diagrams.
Operation and maintenance and manuals including a list of spare parts.
Confirmation of compliance with the requirements of the Meteorological and Seismic Design Criteria section.

1-4. OPERATION AND MAINTENANCE MANUALS. Operation and maintenance manuals shall be submitted in accordance with the Submittal Procedures section. The operation and maintenance manuals shall be in addition to any instructions or parts lists packed with or attached to the equipment when delivered.

1-5. DELIVERY, STORAGE, AND HANDLING. Shipping shall be in accordance with the Product Delivery Requirements section. Handling and Storage shall be in accordance with the Product Storage and Handling Requirements section.

1-6. SPARE PARTS. Spare parts shall be suitably packaged, as specified herein, with labels indicating the contents of each package. Spare parts shall be delivered to Owner as directed. Spare parts shall be provided as follows:

Spare Parts	Quantity
Spare Fuses	1 Complete Set
Spare selector switches, Pushbuttons, and indicator lamps	1 Complete Set
Main control board	1 Complete Set
Spare controller cable	1 Complete Set

PART 2 - PRODUCTS

2-1. ACCEPTABLE MANUFACTURERS. The automatic transfer switch shall be a product of a manufacturer who has supplied such equipment for at least 5 years.

The automatic transfer switch shall be manufactured by Automatic Switch Co. (ASCO), Eaton, or Russelectric Inc., without exception.

2-2. CONSTRUCTION FEATURES. The automatic transfer switch shall be NEMA 4X rated and constructed of 316 Stainless Steel. Rated for 480V, 3-Phase, 3-Wire, 200A Continuous, 42KA SIC, 3-Pole Switching.

2-2.01. Enclosure. The enclosure for the transfer switch shall be as follows:

Type of mounting	Freestanding
Enclosure rating	Outdoor NEMA Type 4X for pad mounting

Dead front, wall mounted and front accessible, constructed from 14 gauge stainless steel. Adequate bracing shall be provided for seismic forces. The bracing shall be designed to meet the requirements of the Meteorological and Seismic Design Criteria section.

2-2.02. Rating. Automatic transfer switches shall be rated for continuous duty in both normal and emergency positions. The switches shall have the number of poles as specified below, and shall be double-throw. Ampere ratings, and 3-cycle closing and withstand ratings shall be as specified below.

Number of poles	3-pole
Ampere rating and 3-cycle closing and withstand rating	42,000 A

Switches shall be equipped with a solid neutral.

2-2.03. Space Heaters. Not used.

2-3. PERFORMANCE AND DESIGN REQUIREMENTS.

2-3.01. Equipment Description. The automatic transfer switches shall transfer electric loads from the normal source of electric power to an emergency source of power as indicated on the Drawings. The transfer switches shall automatically transfer the electrical load circuits upon an interruption or a decrease in the voltage of the normal source of power and shall transfer the loads back to the normal source when it becomes available. The transfer switches shall be furnished without integral overcurrent protection. The switches shall be electrically operated but mechanically held in both the normal and emergency positions. The operating mechanism shall be momentarily energized from the source to which the load is being transferred. All main and arcing contacts and control elements shall be removable from the front of the switches without removing the switch from the enclosure and without removing the power cables. The automatic transfer switches shall be so designed that the load circuits cannot be connected to more than one source of power at a time. The automatic transfer switches shall be magnetic contactor type.

2-3.01.01. Automatic Transfer Switch. The automatic transfer switch shall be an electrically operated double throw switch. Main contacts shall be silver composition. Main and arcing contacts shall be visible without major disassembly to facilitate inspection and maintenance. A manual handle shall be provided for maintenance.

Switches composed of molded case breakers, contactors, or similar components not specifically designed for automatic transfer switch applications will not be acceptable.

2-3.01.02. Bypass-Isolation Switch. A bypass-isolation transfer switch shall be provided to permit manual bypassing and isolation of the automatic transfer switch.

Bypassing the load to either the normal or emergency source shall completely isolate the transfer switch from both sources and the load and shall be possible regardless of the status of the switch. Bypassing to the load-carrying source shall be possible without any interruption of power to the load (make-before-break). Load-break type bypassing will not be acceptable.

Provisions shall be made for testing the automatic transfer switch when operating in bypass. Testing in bypass shall not disturb power to the load.

2-3.02. Control System. The control system shall consist of all control devices necessary to operate the switch as described. The system shall incorporate a microprocessor control module connected to the power transfer components by a wire harness and keyed disconnect plugs. The control module shall be completely enclosed with a protective cover and shall be mounted separately from the transfer switch unit for safety and ease of maintenance. Sensing and control logic shall be provided on plug-in circuit boards. All interface relays shall be identical and shall be control grade, plug-in type, with dust covers.

All control components shall meet or exceed the voltage withstand capability in accordance with IEEE C37.90.1 and NEMA ICS 1, NEMA ICS 2, NEMA ICS 6, NFPA 70, AND UL 1008.

2-3.02.01. Performance. The automatic transfer switch shall be designed to function in accordance with the following requirements:

a. The voltage of each phase of the normal source shall be monitored and the pickup voltage shall be adjustable from 85 percent to 100 percent of nominal, and the dropout voltage shall be adjustable from 75 percent to 98 percent of the pickup value. The transfer to emergency will be initiated upon reduction of the normal source to 85 percent of the normal voltage, and retransfer to normal shall occur when the normal source restores to 90 percent of the normal voltage.

b. A time delay to override momentary normal source outages to delay all transfer switch and engine starting signals shall be provided. The time delay shall be field adjustable from 0.5 to 6 seconds and shall be factory set at 1 second.

c. A time delay to retransfer to the normal source shall be provided. The time delay shall be automatically bypassed if the emergency

source fails and the normal source is available. The time delay shall be field adjustable from 0 to 30 minutes and shall be factory set at 10 minutes.

d. An in-phase monitor shall be provided to control transfer so motor load inrush currents do not exceed normal starting currents. The monitor shall compare the phase relationship and frequency difference between the normal and emergency sources and shall permit transfer only at acceptable values of voltage, phase relationship, and frequency differential.

e. An unloaded running time delay for engine-generator cool-down shall be provided. The time delay shall be field adjustable from 0 to 60 minutes and shall be factory set at 5 minutes.

2-3.02.02. Indication. The automatic transfer switch shall include indication features in accordance with the following requirements:

a. A detailed step-by-step operating instruction plate shall be provided on the front of the switch.

b. Indicating lights or microprocessor control display indication shall be provided for, but shall not be limited to, the following:

Normal source available.
Emergency source available.
Bypass switch in normal position.
Bypass switch in emergency position.
Automatic transfer switch isolated.
Automatic transfer switch inhibit.
Automatic transfer switch in normal position.
Automatic transfer switch in emergency position.
Automatic transfer switch in test mode.

c. One auxiliary contact shall be provided that is closed when the automatic transfer switch is connected to the normal source and one contact that is closed when the automatic transfer switch is connected to the emergency source.

d. A contact, which will close when the normal source fails, shall be provided to initiate engine starting. The contact shall be rated 10 amperes, 32 VDC and shall be gold plated for low voltage service.

2-3.03. Shop Painting. All iron and steel surfaces, except machined surfaces and stainless steel, shall be shop painted with the manufacturer's standard coating. Finish color shall be baked enamel applied over a rust-inhibitor, phosphate-based coat . Field painting, other than touchup painting, shall not be

required. A sufficient quantity of additional coating material and thinner shall be furnished to permit field touchup of damaged coatings.

The underside of equipment to be installed in exposed outdoor locations shall be thoroughly cleaned and coated with an automotive type undercoating material. The coating shall be thick enough to withstand normal handling during shipping and installation. The underside is defined as the surfaces in contact with the floor or pad and other surfaces not readily accessible for field painting. The coating may be factory or field applied.

2-3.04. Shop Tests. After the equipment has been completely assembled, it shall be shop tested for general operating condition, circuit continuity, high potential, and for compliance with the governing standards. Certified test results shall be submitted to Engineer before the equipment is shipped.

PART 3 – EXECUTION

3-1. INSTALLATION. The transfer switch will be installed in accordance with Electrical Equipment Installation section.

3-2. FIELD QUALITY CONTROL.

3-2.01. Installation Check. An experienced, competent, and authorized representative of the manufacturer shall visit the site of the Work and inspect, check, adjust if necessary, and approve the equipment installation. The representative shall be present when the equipment is placed in operation in accordance with Commissioning section, and shall revisit the jobsite as often as necessary until all trouble is corrected and the equipment installation and operation are satisfactory in the opinion of Engineer.

The manufacturer's representative shall furnish a written report certifying that the equipment has been properly installed and lubricated; is in accurate alignment; is free from any undue stress imposed by connecting piping or anchor bolts; and has been operated under full load conditions and that it operated satisfactorily.

All costs for these services shall be included in the Contract Price.

3-3. TRAINING. The manufacturer’s representative shall provide training of Owner’s personnel as described in the Demonstration and Training specification. All costs for training services shall be included in the Contract Price.

End of Section

Section 16670

LIGHTNING PROTECTION FOR STRUCTURES

PART 1 - GENERAL

1-1. SCOPE. This section covers furnishing the design of lightning protection systems and the furnishing and installation of lightning protection equipment for the following structures:

Dennis Street Pump Station Generator Platform & Antenna

Lightning protection systems shall be furnished, installed, and tested as specified. Lightning protection equipment shall meet the requirements specified herein.

Lightning protection systems shall consist of, but not be limited to, air terminals; main, bonding, and down conductors; ground terminals; and all required connectors and fittings required to complete the system.

The lightning protection system shall include the bonding of all roof-mounted mechanical equipment, roof drains, roof mounted ladders, chimneys, antennas, and other roof mounted metal objects.

1-2. GENERAL. Contractor shall furnish all installation drawings, tools, equipment, materials, and supplies and shall perform all labor and obtain all inspections to complete the work as specified, and in compliance with all codes, standards, and regulations.

Contractor shall provide coordination with other contractors and supervision of installation as needed during construction.

The design of the system shall include determination of the overall lightning hazard for the geographic location of the project and for the structures, the selection of Class I and/or Class II materials, the need of corrosion protection for the copper and/or aluminum components used, and consideration of other pertinent factors. The design shall produce a zone of protection from lightning to prevent personal injury, structural damage, and equipment downtime.

Equipment furnished and installed under this section shall be fabricated, assembled, erected, and placed in proper operating condition in full conformity with the Drawings, Specifications, engineering data, instructions, and recommendations of UL unless exceptions are noted by Engineer.
The system shall be installed by an installer who has UL listing and subscribes to the UL Follow-Up Service.

1-2.01. General Equipment Stipulations. The General Equipment Stipulations section shall apply to all equipment furnished under this section. If requirements in this section differ from those in the General Equipment Stipulations section, the requirements specified herein shall take precedence.

1-2.02. Seismic Design Requirements. Seismic design requirements for products specified herein shall be as indicated in the Meteorological and Seismic Design Criteria section.

1-2.03. Governing Standards. All system components furnished under this section shall be designed in accordance with ANSI/UL 96 - Lightning Protection Components. All lightning protection systems furnished under this section shall be designed, constructed, and tested in accordance with UL 96A – Installation Requirements for Lightning Protection Systems and ANSI/NFPA 780 – Standard for the Installation of Lightning Protection Systems.

Lightning protection systems shall be bonded to grounding electrode systems in accordance with the National Electrical Code.

1-2.04. Workmanship and Materials. Contractor shall guarantee all equipment against faulty or inadequate design, improper assembly or erection, defective workmanship or materials, and leakage, breakage, or other failure. Materials shall be suitable for service conditions.

All equipment shall be designed, fabricated, and assembled in accordance with recognized and acceptable engineering and shop practice. Individual parts shall be manufactured to standard sizes and thicknesses so that repair parts, furnished at any time, can be installed in the field. Like parts of duplicate units shall be interchangeable. Equipment shall not have been in service at any time prior to delivery, unless required by tests.

1-3. SUBMITTALS. Complete certification of design calculations; assembly, and installation drawings; together with complete engineering data covering the materials used and the parts, devices, and accessories forming the system, shall be submitted in accordance with the Submittals Procedures section.

Submit confirmation of compliance with the requirements of the Meteorological and Seismic Design Criteria section.

1-4. QUALITY ASSURANCE. The lightning protection system shall be inspected and tested after installation by conducting continuity and ground resistance tests as well as a visual inspection. Inspection results and test data shall be submitted in accordance with the Submittals Procedures section. Upon completion of the installation, Contractor shall apply for and deliver the UL Master Label Certificate of Inspection for each structure/building.

PART 2 - PRODUCTS

2-1. ACCEPTABLE MANUFACTURERS. The system components shall be manufactured by a company that has been specializing in the design and manufacture of UL listed lightning protection equipment for at least 5 years.

2-2. MATERIALS. All manufactured and fabricated components shall conform to NFPA 780 Class I or Class II as needed for the structures on which they will be installed. The system components shall be fabricated from the following metals:

Conductors	Copper.
Air Terminals	Copper or bronze.
Grounding Electrodes	Copper clad steel.
Fasteners	Copper or bronze.
Bimetallic Fasteners	Bronze and aluminum.

Aluminum conductors and air terminals shall be mounted on aluminum surfaces only.

All materials furnished for the lightning protection system shall bear the inspection label of UL.

PART 3 - EXECUTION

3-1. INSTALLATION. The lightning protection system shall be installed in a neat and inconspicuous manner so all components will blend in with the appearance of the building. All conductors shall be concealed or semi-concealed during construction using methods recommended in NFPA 780 and UL 96A.

Air terminals shall have base supports designed for the surface on which they are used and shall be securely anchored. All exposed metal eave troughs, roof vents, guy wires, antennas, and air handling equipment shall be bonded to the lightning protection system in such a way that two paths to ground are provided.

The lightning protection system shall be bonded to structure/building electrical ground rings wherever they are available.

End of Section

THIS PAGE LEFT BLANK INTENTIONALLY