BID DOCUMENTS FOR:

ITB #18-037

CITY MARINA @ GARRISON BIGHT TARPON PIER REPAIR – HURRICANE IRMA DAMAGE

JULY 2018

CITY OF KEY WEST

MAYOR: CRAIG CATES

COMMISSIONERS:

JIMMY WEEKLEY

SAMUEL KAUFMAN

BILLY WARDLOW

RICHARD G. PAYNE

MARGARET ROMERO

CLAYTON LOPEZ

PREPARED BY:
Port & Marine Services

ITB DOCUMENTS

CITY OF KEY WEST

KEY WEST, FLORIDA

BID DOCUMENTS

for

CITY MARINA @ GARRISON BIGHT TARPON PIER REPAIR – HURRICANE IRMA DAMAGE

****

CONSISTING OF:

BIDDING REQUIREMENTS
CONTRACT FORMS
CONDITIONS OF THE CONTRACT
TECHNICAL SPECIFICATIONS
DRAWINGS

****

KEY WEST, FLORIDA

JULY 2018

TABLE OF CONTENTS

Page

PART 1 - BIDDING REQUIREMENTS

INVITATION TO BID 1
INSTRUCTIONS TO BIDDERS 2
BID FORM 9
FLORIDA BID BOND 15
ANTI-KICKBACK AFFIDAVIT 17
PUBLIC ENTITIES CRIME FORM 18
CITY OF KEY WEST INDEMNIFICATION 20
EQUAL BENEFITS FOR DOMESTIC PARTNERS AFFIDAVIT 21
CONE OF SILENCE 22
NON-COLLUSION AFFIDAVIT ~~(ATTACHMENT I)~~ 23
CERTIFICATION REGARDING LOBBYING 24
BIDDER'S CHECKLIST 25

PART 2 - CONTRACT FORMS

CONTRACT 27
FLORIDA PERFORMANCE BOND 39
FLORIDA PAYMENT BOND 41
LICENSE REQUIREMENT AND COST 43

PART 3 - CONDITIONS OF THE CONTRACT

GENERAL CONDITIONS 45
SUPPLEMENTARY CONDITIONS 64

PART 4 - SPECIFICATIONS

FLOATING DOCK 73

PART 5 – SUPPLEMENTAL INFORMATION 77

FEDP PERMIT w/ DRAWINGS .....
2 C.F.R., PART 200, APPENDIX II .....

PART 1

BIDDING REQUIREMENTS

INVITATION TO BID

Sealed Bids for The City of Key West **"CITY MARINA @ GARRISON BIGHT - TARPON PIER REPAIR – HURRINCANE IRMA DAMAGE**," addressed to the City of Key West, will be received at the office of the City Clerk, 1300 White Street, Key West, Florida until **3:00 p.m**., local time, on the **22nd day of August 2018**, and then will be publicly opened and read. Any bids received after the time and date specified will not be considered.

Please submit one (1) original bid package and two (2) electronic copies on USB drives with a single PDF file of the entire bid package. Bid package shall be enclosed in a sealed envelope, clearly marked on the outside **"ITB #18-037 CITY MARINA @ GARRISON BIGHT - TARPON PIER REPAIR – HURRINCANE IRMA DAMAGE"** addressed and delivered to the City Clerk at the address noted above.

The CITY is seeking BIDS from qualified individuals or firms for TARPON PIER REPAIR, caused by Hurricane Irma, located at the CITY MARINA @ GARRISON BIGHT

The full Invitation to Bid may be obtained from Demand Star by Onvia and The City of Key West website. Please contact Demand Star at www.demandstar.com or call 1-800-711-1712 or www.cityofkeywest-fl.gov

A **MANDATORY PRE-BID** BE HELD AT THE CITY MARINA AT GARRISON BIGHT, 1801 N ROOSEVELT BLVD., KEY WEST, FL 33040 ON **AUGUST 14, 2018 @ 2:30PM**

EACH BID MUST BE SUBMITTED ON THE PRESCRIBED FORM AND ACCOMPANIED BY BID SECURITY AS PRESCRIBED IN THE INSTRUCTIONS TO BIDDERS, PAYABLE TO THE CITY OF KEY WEST, FLORIDA, IN AN AMOUNT NOT LESS THAN FIVE (5) PERCENT OF THE AMOUNT BID.

For information please contact Karen Olson, Deputy Port and Marine Services Director by email at kolson@cityofkeywest-fl.gov. Verbal communications, per the City's "Cone of Silence" ordinance is not allowed.

The Bidder shall furnish documentation showing that he is in compliance with the licensing requirements of County, and City licenses as would be required within ten days of the award. The successful Bidder must also be able to satisfy the City Attorney as to such insurance coverage and legal requirements as may be demanded by the Proposal in question. The CITY may reject BID for any and/or all of the following reasons: (1) for budgetary reasons, (2) if the proposer misstates or conceals a material fact in its bid, (3) if the proposal does not strictly conform to the law or is non-responsive to the bid requirements, (4) if the proposal is conditional, or (5) if a change of circumstances occurs making the purpose of the proposal unnecessary to the CITY. (6) if such rejection is in the best interest of the CITY. The CITY may also waive any minor formalities or irregularities in any proposal.

The CITY retains the right to award bid to the bidder or bidders that best meet the needs of the City.

* * * * * *

INSTRUCTIONS TO BIDDERS

1. CONTRACT DOCUMENTS

A. FORMAT

The Bid Documents are divided into parts, divisions, and sections for convenient organization and reference.

B. DOCUMENT INTERPRETATION

Should there be any doubt as to the meaning or intent of said Bid Documents, the Bidder should request of the Deputy Director Port and Marine Services, in writing (at least **5** calendar days prior to Bid opening) an interpretation thereof. Any interpretation or change in said Bid Documents will be made only in writing in the form of Addenda to the Documents, which will be furnished to all registered holders of Bid Documents. Bidders shall submit with their Bids, or indicate receipt of all Addenda. The Owner will not be responsible for any other explanation or interpretations of said Documents.

The intent of these Documents is to describe a functionally complete project (or part thereof) to be constructed in accordance with the Contract Documents. Any work, materials, or equipment that may reasonably be inferred from the Contract Documents, as being required to produce the intended result shall be supplied whether or not specifically called for.

2. SCOPE OF SERVICES

The work includes repair/replacement of Hurricane Irma damage to docks at the CITY MARINA @ GARRISON BIGHT. The scope of work includes, but is not limited to following:

Remove and replace one 10'W x 39'L main pier section, two finger piers, two knee braces and (2) four roller pile guides damaged by houseboat(s) that sank while moored to Tarpon Pier during Hurricane Irma.

Requirements:

- Remove existing Ipe decking and store to be reinstalled onto new dock sections.
  - Remove SS screws' completely from each board to prevent scarring during movement and storage.
  - Move and stack decking securely as directed.
- Disconnect and remove all existing utilities as required.
- Remove SS bolts, disconnect and remove two pile guides securing end fingers to piles.
- Remove SS bolts, disconnect and remove two 4'x 4' knee braces
- Remove SS bolts, disconnect and remove two 4'W x 40'L finger piers from main pier
- Remove SS bolts, disconnect and remove one 10'W x 39'L section of main pier.
- Replace the aforementioned sections and components with new dock sections provided by GatorDock

- Reinstall all utilities as required.
- Reinstall decking consistent with the spacing and layout of the existing decking.

3. REQUIRED QUALIFICATIONS

The prospective Bidder must meet the statutorily prescribed requirements before award of Contract by the CITY. Bidders must hold or obtain all licenses and/or certificates as required by the State and Local Statutes in order to bid and provide the product specified herein. Additionally, all Bidders must meet the minimum qualifications as described in Required Qualifications section.

4. BIDDER'S UNDERSTANDING

Each Proposer must inform himself of the conditions relating to the execution of the work and make himself thoroughly familiar with all the Contract Documents. Failure to do so will not relieve the successful Proposer of his obligation to enter into a Contract and complete the contemplated work in strict accordance with the Contract Documents.

Each Proposer shall inform himself of, and the Proposer awarded a Contract shall comply with, federal, state, and local laws, statutes, and ordinances relative to the execution of the work. This requirement includes, but is not limited to, applicable regulations concerning minimum wage rates, nondiscrimination in the employment of labor, protection of public and employee safety and health, environmental protection, the protection of natural resources, fire protection, permits, fees, and similar subjects.

5. TYPE OF BID

UNIT PRICE BID

Bid unit prices stated in this proposal include all costs and expenses for labor, equipment, materials, disposal and contractor's overhead and profit. Unit prices for the various work items are intended to establish a total price for completing the project in its entirety. All work and incidental costs shall be included for payment under the several scheduled items of the overall contract, and no separate payment will be made therefore.

6. PREPARATION OF BIDS

A. GENERAL

All blank spaces in the BID form must be filled in for all schedules and associated parts, as required, preferably in BLACK INK. All price information shall be clearly shown in both words and figures where required. No changes shall be made in the phraseology of the forms. Written amounts shall govern in case of discrepancy between the amounts stated in writing and the amounts stated in figures. In case of discrepancy between unit prices and extended totals, unit prices shall prevail.

Any BID shall be deemed informal which contains omissions, erasures, alterations, or additions of any kind, or prices uncalled for, or in which any of the prices are obviously unbalanced, or which in any manner shall fail to conform to the conditions of the published Invitation to BID.

Only one BID from any individual, firm, partnership, or corporation, under the same or different names, will be considered. Should it appear to the Owner that any Bidder is interested in more than one BID for work contemplated; all Bids in which such Bidder is interested will be rejected.

B. SIGNATURE

The Bidder shall sign his BID in the blank space provided therefor. If Bidder is a corporation, the legal name of the corporation shall be set forth above together with the signature of the officer or officers authorized to sign Contracts on behalf of the corporation. If Bidder is a partnership, the true name of the firm shall be set forth above together with the signature of the partner or partners authorized to sign Contracts in behalf of the partnership. If signature is by an agent, other than an officer of a corporation or a member of a partnership, a notarized power-of-attorney must be on file with the Owner prior to opening of Bids or submitted with the Bid otherwise the Bid will be regarded as not properly authorized.

C. ATTACHMENTS

Bidder shall complete and submit the following forms with his bid:

1. Anti-Kickback Affidavit
2. Public Entity Crimes Form
3. City of Key West Indemnification Form
4. Equal Benefits for Domestic Partners Affidavit
5. Cone of Silence
6. Local Vender Certification
7. Proof of Insurance

7. MODIFICATION OR WITHDRAWAL OF BID

Prior to the time and date designated for receipt of Bids, any Bid submitted may be withdrawn by notice to the party receiving Bids at the place designated for receipt of Bids. Such notice shall be in writing over the signature of the Bidder or by telegram. If by telegram, written confirmation over the signature of the Bidder shall be mailed and postmarked on or before the date and time set for receipt of Bids. No Bid may be withdrawn after the time scheduled for opening of Bids unless the time specified in paragraph AWARD OF CONTRACT of these Instructions to Bidders shall have elapsed.

8. AWARD OF CONTRACT

Within **10** calendar days after the opening of Bids the City Manager, under emergency declaration, will accept one or more of the Bids. The acceptance of the Bid will be by written notice of award mailed to the office designated in the Bid or delivered to the Bidder's representative.

The CITY reserves the right to accept or reject any or all Bids and to waive any formalities and irregularities in said Bids.

9. BASIS OF AWARD

The award will be made by the Owner on the basis of the BID from the lowest, responsive, responsible BIDDER(s) which, in the Owner's sole and absolute judgment will best serve the interest of the Owner. Low bid(s) selection to be based on an hourly rate comparison.

10. CONTRACT BONDS

A. PERFORMANCE AND PAYMENT BONDS *(if applicable)*

The successful Bidder shall file with the OWNER, at the time of delivery of a signed Work Order *if applicable*, a Performance Bond and Payment Bond on the form bound herewith, each in the full amount of the Work Order price in accordance with the requirements of Florida Statutes Section 255.05 or 713.23, as applicable, as security for the faithful performance of the Work Order and the payment of all persons supplying labor and materials for the construction of the work and to cover all guarantees against defective workmanship or materials, or both, during the warranty period following the date of final acceptance of the work by the OWNER. The Surety furnishing this bond shall have a sound financial standing and a record of service satisfactory to the OWNER, shall be authorized to do business in the State of Florida, and shall be listed on the current U.S. Department of Treasury Circular Number 570 or amendments thereto in the Federal Register of acceptable Sureties for federal projects. The CONTRACTOR shall supply the OWNER with phone numbers, addresses, and contacts for the Surety and their agents.

B. POWER-OFATTORNEY

The Attorney-in-Fact (Resident Agent) who executes this Performance and Payment Bond in behalf of the Surety must attach a notarized copy of his power-of-attorney as evidence of his authority to bind the Surety on the date of execution of the bond.

All Contracts, Performance and Payment Bonds, and respective powers-of-attorney will have the same date.

C. COST OF BONDS

Bonds will be paid for at cost.

11. PUBLIC RECORDS REQUIREMENTS

In addition to other contract requirements provided by law, each public agency contract for services must include a provision that requires the contractor to comply with public records laws, specifically to (a) keep and maintain public records that ordinarily and necessarily would be required by the public agency in order to perform the service; (b) provide the public with access to public records on the same terms and conditions that the public agency would provide the records and at a cost that does not exceed the cost provided in this chapter or as otherwise provided by law; (c) ensure that public records that are exempt or confidential and exempt from public records disclosure requirements are not disclosed except as authorized by law; and (d) meet all requirements for retaining public records and transfer, at no cost, to the public agency all public records in possession of the contractor upon termination of the contract and destroy any duplicate public records that exempt or confidential and exempt from public records disclosure requirements. All records stored electronically must be provided to the public agency in

a format that is compatible with the information technology systems of the public agency. If a contractor does not comply with a public records request, the public agency shall enforce the contract provisions in accordance with the contract.

12. PERMITS AND FEES

The Bidder awarded this project shall procure and pay all local permits and licenses, charges, and fees, and give notices necessary and incidental to the due and lawful prosecution of the work, the cost of which shall be included in the fee received for the work, except where separately agreed.

13. BIDDER'S DECLARATION AND UNDERSTANDING

The undersigned, hereinafter called the Bidder, declares that the only persons or parties interested in this Bid are those named herein, that this Bid is, in all respects, fair and without fraud, that it is made without collusion with any official of the Owner, and that the Bid is made without any connection or collusion with any person submitting another Bid on this Contract.

The Bidder further declares that he has carefully examined the Contract Documents and that this Bid is made according to the provisions and under the terms of the Contract Documents, which Documents are hereby made a part of this Bid.

14. INDEMNITY LANGUAGE

To the fullest extent permitted by law, the CONTRACTOR expressly agrees to indemnify and hold harmless the City of Key West, their officers, directors, agents and employees *(herein called the "indemnitees") from liabilities, damages, losses and costs, including but not limited to, reasonable attorney's fees and court costs, such legal expenses to include costs incurred in establishing the indemnification and other rights agreed to in this Paragraph, to persons or property, to the extent caused by the negligence, recklessness, or intentional wrongful misconduct of the CONTRACTOR, its Subcontractors or persons employed or utilized by them in the performance of the Contract. Claims by indemnitees for indemnification shall be limited to the amount of CONTRACTOR's insurance or $1 million per occurrence, whichever is greater. The parties acknowledge that the amount of the indemnity required hereunder bears a reasonable commercial relationship to the Contract and it is part of the project specifications or the bid documents, if any.

The indemnification obligations under the Contract shall not be restricted in any way by any limitation on the amount or type of damages, compensation, or benefits payable by or for the CONTRACTOR under Workers' Compensation acts, disability benefits acts, or other employee benefits acts, and shall extend to and include any actions brought by or in the name of any employee of the CONTRACTOR or of any third party to whom CONTRACTOR may subcontract a part or all of the Work. This indemnification shall continue beyond the date of completion of the work.

15. CERTIFICATES OF INSURANCE

Bidder agrees to furnish the Owner, before commencing the work under this Contract, the certificates of insurance as specified below.

CONTRACTOR is to secure, pay for, and file with the City of Key West, prior to commencing any work under the Contract, all certificates for workers' compensation, public liability, and property damage liability insurance, and such other insurance coverages as may be required by specifications and addenda thereto, in at least the following minimum amounts with specification amounts to prevail if greater than minimum amounts indicated. Notwithstanding any other provision of the Contract, the CONTRACTOR shall provide the minimum limits of liability insurance coverage as follows:

Type of Insurance	**Limits**	**Comments**
Commercial General Liability	$1,000,000	The proposers may have these coverages combined in 1 policy
WaterCraft Liability	$1,000,000	
Business Automobile Liability	$1,000,000	
Workers' Compensation	Statutory	
Employers Liability	$1,000,000/$1,000,000/$1,000,000	
USL&H and Jones Act Coverage	$1,000,000	

CONTRACTOR shall furnish an original Certificate of Insurance indicating, and such policy providing coverage to, City of Key West named as an additional insured on a PRIMARY and NON-CONTRIBUTORY basis utilizing an ISO standard endorsement at least as broad as CG 2010 (11/85) or its equivalent, (combination of CG 20 10 07 04 and CG 20 37 07 04, providing coverage for completed operations, is acceptable) including a waiver of subrogation clause in favor of City of Key West on all policies. CONTRACTOR will maintain the General Liability and Umbrella Liability insurance coverages summarized above with coverage continuing in full force including the additional insured endorsement until at least 3 years beyond completion and delivery of the work contracted herein.

Notwithstanding any other provision of the Contract, the CONTRACTOR shall maintain complete workers' compensation coverage for each and every employee, principal, officer, representative, or agent of the CONTRACTOR who is performing any labor, services, or material under the Contract. Further, CONTRACTOR shall additionally maintain the following minimum limits of coverage:

Bodily Injury Each Accident	$1,000,000
Bodily Injury by Disease Each Employee	$1,000,000
Bodily Injury by Disease Policy Limit	$1,000,000

The City of Key West confirms that the scope of services specified in the Contract requires work on or near a navigable waterway. Water description: City of Key West Mooring Field. Therefore, the CONTRACTOR's workers' compensation policy shall be endorsed to provide the following:

- Workers Compensation/Employer Liability

USL&H Coverage (Longshore and Harbor Workers' Compensation Act) Endorsement WC 000106A
Jones Act Coverage* Endorsement WC 000201A

Note: Jones Act (Crew) coverage may be provided under the P&I policy, if Contractor is using an OWNED vessel during the course of the work.

CONTRACTOR shall provide the City of Key West with a Certificate of Insurance verifying compliance with the workman's compensation coverage as set forth herein and shall provide as often as required by the City of Key West such certification which shall also show the insurance company, policy number, effective and expiration date, and the limits of workman's compensation coverage under each policy.

CONTRACTOR's insurance policies shall be endorsed to give 30 days written notice to the City of Key West in the event of cancellation or material change, using form CG 02 24, or its equivalent.

Certificates of Insurance submitted to the City of Key West will not be accepted without copies of the endorsements being requested. This includes additional insured endorsements, cancellation/material change notice endorsements, and waivers of subrogation. Copies of USL&H Act and Jones Act endorsements will also be required if necessary. PLEASE ADVISE YOUR INSURANCE AGENT ACCORDINGLY.

CONTRACTOR will comply with any and all safety regulations required by any agency or regulatory body including but not limited to OSHA. CONTRACTOR will notify City of Key West immediately by telephone at (305) 809-3811 any accident or injury to anyone that occurs on the jobsite and is related to any of the work being performed by the CONTRACTOR.

SURETY AND INSURER QUALIFICATIONS

All bonds, insurance contracts, and certificates of insurance shall be either executed by or countersigned by a licensed resident agent of the Surety or insurance company, having his place of business in the State of Florida, and in all ways complying with the insurance laws of the State of Florida. Further, the said Surety or insurance company shall be duly licensed and qualified to do business in the State of Florida.

16. ADDENDA

The Bidder hereby acknowledges that he has received Addenda No's. _____, _____, _____, and agrees that all addenda issued are hereby made part of the Contract Documents, and the Bidder further agrees that his Bid(s) includes all impacts resulting from said addenda.

17. SALES AND USE TAXES

The Bidder agrees that all federal, state, and local sales and use taxes are included in the stated lump sum for the work.

* * * * *

BID FORM

Project Title: **TARPON PIER REPAIR – HURRICANE IRMA DAMAGE**

Project No.: **ITB #18-037**

UNIT PRICE BID

Bid unit prices stated in this proposal include all costs and expenses for labor, equipment, materials, disposal and contractor's overhead and profit. Unit prices for the various work items are intended to establish a total price for completing the project in its entirety. All work and incidental costs shall be included for payment under the several scheduled items of the overall contract, and no separate payment will be made therefore.

1. Mobilization/Demobilization and Insurance

a.	Mobilization	1	each	$_____
b.	Demobilization	1	each	$_____
c.	General Conditions	1	each	$_____

1 LS (10% of Construction Cost Max.) $_____

2. Payment and Performance Bonds

1 LS $_____

3. Permit Fees (to be paid at cost)

1 LS $**6,000.00**

4. Remove / Replace Existing IPE Decking (includes all labor, equipment and material)

1 LS $_____

5. Remove / Replace Existing Utilities (includes all labor, equipment and material)

1 LS $_____

6. Remove / Replace Existing Dock Accessories (includes all labor, equipment and material)

1 LS $_____

7. Remove Main Pier Section, (2) Finger Piers w/ Knee Braces (includes all labor, equipment and material)

1 LS $_____

8. Install 10'x39' Main Pier Section (includes all labor, equipment and material)

1 LS $_____

9. Install (2) Finger Piers w/ Knee Braces (includes all labor, equipment and material)

1 LS $_____

10. Signed and Sealed Shop Drawings (as required to obtain City of Key West Building Permit)

1 LS $_____

11. Floating Structure Relocation (includes all labor, equipment and material)

1 LS $_____

12. General Allowance (only to be used with Owner's written approval)

1 LS $**10,000.00**

TOTAL OF ALL EXTENDED LINE ITEMS LISTED ABOVE:

Total of line items 1 - 12 $_____

_____Dollars & _____Cents
(amount written in words)

Cost of work to be all inclusive for a complete job including equipment, material, labor, permits, insurance, overhead and profit.

NOTE: THE TOTAL BID WILL BE THE BASIS OF EVALUATING LOW BIDDER AND BASIS OF AWARD

BIDDER'S INFORMATION

Company Name: _____

Address: _____

_____

Contact Name: _____

Email: _____

Telephone: _____

Fax: _____

Signature: _____ *Date:* _____

SUBCONTRACTORS

The Bidder further proposes that the following subcontracting firms or businesses will be awarded subcontracts for the following portions of the work in the event that the Bidder is awarded the Contract:

_____
Portion of Work

_____
Name

_____, _____, _____, _____
Street City State Zip

_____
Portion of Work

_____
Name

_____, _____, _____, _____
Street City State Zip

_____
Portion of Work

_____
Name

_____, _____, _____, _____
Street City State Zip

_____
Portion of Work

_____
Name

_____, _____, _____, _____
Street City State Zip

_____
Portion of Work

_____
Name

_____, _____, _____, _____
Street City State Zip

SURETY

_____whose address is

_____, _____, _____, _____
Street City State Zip

_____ _____
Phone Resident Agent

BIDDER

The name of the Bidder submitting this Bid is _____

_____doing business at

_____, _____, _____, _____
Street City State Zip

_____
email address

which is the address to which all communications concerned with this Bid and with the Contract shall be sent.

The names of the principal officers of the corporation submitting this Bid, or of the partnership, or of all persons interested in this Bid as principals are as follows:

Name	Title
_____	_____
_____	_____
_____	_____
_____	_____

If Sole Proprietor or Partnership

IN WITNESS hereto the undersigned has set his (its) hand this _____ day of _____ 20___.

_____
Signature of Bidder

_____
Title

If Corporation

IN WITNESS WHEREOF the undersigned corporation has caused this instrument to be executed and its seal affixed by its duly authorized officers this _____ day of _____ 20____.

(SEAL)

_____
Name of Corporation

By _____

Title_____

Attest _____
Secretary

_____

Sworn and subscribed before me this _____ day of _____20___.

NOTARY PUBLIC, State of _____, at Large

My Commission Expires:

FLORIDA BID BOND

BOND NO. _____

AMOUNT: $_____

KNOW ALL MEN BY THESE PRESENTS, that _____

_____

hereinafter called the PRINCIPAL, and _____

_____

a corporation duly organized under the laws of the State of _____

having its principal place of business at _____

_____in the State of _____,

and authorized to do business in the State of Florida, as SURETY, are held and firmly bound unto

_____

hereinafter CITY OF KEY WEST called the OBLIGEE, in the sum of_____

_____ _____ DOLLARS ($_____) for

the payment for which we bind ourselves, our heirs, executors, administrators, successors, and assigns, jointly and severally, firmly by these present.

THE CONDITION OF THIS BOND IS SUCH THAT:

WHEREAS, the PRINCIPAL is herewith submitting his or its Bid Proposal for **CITY MARINA @ GARRISON BIGHT - TARPON PIER REPAIR – HURRICANE IRMA DAMAGE**, said Bid Proposal, by reference thereto, being hereby made a part hereof.

WHEREAS, the PRINCIPAL contemplates submitting or has submitted a bid to the OBLIGEE

for the furnishing of all labor, materials (except those to be specifically furnished by the CITY), equipment, machinery, tools, apparatus, means of transportation for, and the performance of the work covered in the Proposal and the detailed Specifications, entitled:

ITB #18-037

CITY MARINA @ GARRISON BIGHT

TARPON PIER REPAIR – HURRICANE IRMA DAMAGE

WHEREAS, it was a condition precedent to the submission of said bid that a cashier's check, certified check, or bid bond in the amount of 5 percent of the base bid be submitted with said bid as a guarantee that the Bidder would, if awarded the Contract, enter into a written Contract with the CITY for the performance of said Contract, within 10 working days after written notice having been given of the award of the Contract.

NOW, THEREFORE, the conditions of this obligation are such that if the PRINCIPAL within 10 consecutive calendar days after written notice of such acceptance, enters into a written Contract with the OBLIGEE and furnishes the Performance and Payment Bonds, each in an amount equal to 100 percent of the base bid, satisfactory to the CITY, then this obligation shall be void; otherwise the sum herein stated shall be due and payable to the OBLIGEE and the Surety herein agrees to pay said sum immediately upon demand of the OBLIGEE in good and lawful money of the United States of America, as liquidated damages for failure thereof of said PRINCIPAL.

Signed and sealed this _____ day of _____, 20__.

By_____
PRINCIPAL

_____
SURETY

By _____
Attorney-In-Fact

ANTI-KICKBACK AFFIDAVIT

STATE OF _____)

: SS

COUNTY OF _____)

I, the undersigned hereby duly sworn, depose and say that no portion of the sum herein bid will be paid to any employees of the City of Key West as a commission, kickback, reward or gift, directly or indirectly by me or any member of my firm or by an officer of the corporation.

By:_____

Sworn and subscribed before me this _____ day of _____20___.

NOTARY PUBLIC, State of Florida at Large

My Commission Expires:

* * * * * *

SWORN STATEMENT UNDER SECTION 287.133(3)(A)
FLORIDA STATUTES, ON PUBLIC ENTITY CRIMES

THIS FORM MUST BE SIGNED IN THE PRESENCE OF A NOTARY PUBLIC OR OTHER OFFICER AUTHORIZED TO ADMINISTER OATHS.

1. This sworn statement is submitted with Bid or Proposal for _____

_____

2. This sworn statement is submitted by_____
(name of entity submitting sworn statement)

whose business address is _____

_____

and (if applicable) its Federal Employer Identification Number (FEIN) is_____

_____

(If the entity has no FEIN, include the Social Security Number of the individual

signing this sworn statement _____

3. My name is _____
(please print name of individual signing)

and my relationship to the entity named above is _____

4. I understand that a "public entity crime" as defined in Paragraph 287.133(1)(g), Florida Statutes, means a violation of any state or federal law by a person with respect to and directly related to the transaction of business with any public entity or with an agency or political subdivision of any other state or with the United States, including but not limited to, any bid or contract for goods or services to be provided to any public or an agency or political subdivision of any other state or of the United States and involving antitrust, fraud, theft, bribery, collusion, racketeering, conspiracy, material misrepresentation.

5. I understand that "convicted" or "conviction" as defined in Paragraph 287.133(1)(b), Florida Statutes, means a finding of guilt or a conviction of a public entity crime, with or without an adjudication guilt, in any federal or state trial court of record relating to charges brought by indictment information after July 1, 1989, as a result of a jury verdict, nonjury trial, or entry of a plea of guilty or nolo contendere.

6. I understand that an "affiliate" as defined in Paragraph 287.133(1)(a), Florida Statutes, means

    1. A predecessor or successor of a person convicted of a public entity crime; or

    2. An entity under the control of any natural person who is active in the management of the entity and who has been convicted of a public entity crime. The term "affiliate" includes those officers, directors, executives, partners, shareholders, employees, members, and agents who are active in the management of an affiliate. The ownership by one person of shares constituting controlling interest in another person, or a pooling of equipment or income among persons when not for fair market value under an arm's length agreement, shall be a prima facie case that one person controls another person. A person who knowingly enters into a joint venture with a person who has been convicted of a public entity crime in Florida during the preceding 36 months shall be considered an affiliate.

7. I understand that a "person" as defined in Paragraph 287.133(1)(8), Florida Statutes, means any natural person or entity organized under the laws of any state or of the United States with the legal power to enter into a binding contract and which bids or applies to bid on contracts for the provision of goods or services let by a public entity, or which otherwise transacts or applies to transact business with public entity. The term "person" includes those officers, directors, executives, partners, shareholders, employees, members, and agents who are active in management of an entity.

8. Based on information and belief, the statement which I have marked below is true in relation to the entity submitting this sworn statement. (Please indicate which statement applies).

____Neither the entity submitting this sworn statement, nor any officers, directors, executives, partners, shareholders, employees, members, or agents who are active in management of the entity, nor any affiliate of the entity have been charged with and convicted of a public entity crime subsequent to July 1, 1989, AND (Please indicate which additional statement applies.)

_____There has been a proceeding concerning the conviction before a hearing of the State of Florida, Division of Administrative Hearings. The final order entered by the hearing officer did not place the person or affiliate on the convicted vendor list. (Please attach a copy of the final order.)

_____The person or affiliate was placed on the convicted vendor list. There has been a subsequent proceeding before a hearing officer of the State of Florida, Division of Administrative Hearings. The final order entered by the hearing officer determined that it was in the public interest to remove the person or
affiliate from the convicted vendor list. (Please attach a copy of the final order.)

_____The person or affiliate has not been put on the convicted vendor list. (Please describe any action taken by or pending with the Department of General Services.)

_____
(signature)

_____
(date)

STATE OF_____

COUNTY OF_____

PERSONALLY APPEARED BEFORE ME, the undersigned authority,

_____ who, after first being sworn by me, affixed his/her
(name of individual signing)

signature in the space provided above on this _____day of _____ , 20___.

My commission expires:

_____
NOTARY PUBLIC

* * * * * *

CITY OF KEY WEST INDEMNIFICATION FORM

To the fullest extent permitted by law, the VENDOR expressly agrees to indemnify and hold harmless the City of Key West, their officers, directors, agents and employees (herein called the "indemnitees") from any and all liability for damages, including, if allowed by law, reasonable attorney's fees and court costs, such legal expenses to include costs incurred in establishing the indemnification and other rights agreed to in this Paragraph, to persons or property, caused in whole or in part by any act, omission, or default by VENDOR or its subcontractors, material men, or agents of any tier or their employees, arising out of this agreement or its performance, including any such damages caused in whole or in part by any act, omission or default of any indemnitee, but specifically excluding any claims of, or damages against an indemnitee resulting from such indemnitee's gross negligence, or the willful, wanton or intentional misconduct of such indemnitee or for statutory violation or punitive damages except and to the extent the statutory violation or punitive damages are caused by or result from the acts or omissions of the VENDOR or its subcontractors, material men or agents of any tier or their respective employees.

Indemnification by VENDOR for Professional Acts. VENDOR hereby agrees to indemnify the City of Key West and each of its parent and subsidiary companies and the directors, officers and employees of each of them (collectively, the "indemnitees"), and hold each of the indemnitees harmless, against all losses, liabilities, penalties (civil or criminal), fines and expenses (including reasonable attorneys' fees and expenses) (collectively, "Claims") to the extent resulting from the performance of VENDOR's negligent acts, errors or omissions or intentional acts in the performance of VENDOR's services, or any of their respective affiliates, under this Agreement. If claims, losses, damages, and judgments are found to be caused by the joint or concurrent negligence of the City of Key West and VENDOR, they shall be borne by each party in proportion to its negligence.

VENDOR: _____ SEAL:

_____
Address

_____
Signature

_____
Print Name

_____
Title

DATE: _____

NOTARY PUBLIC, State of Florida at Large

My Commission Expires:

* * * * * *

EQUAL BENEFITS FOR DOMESTIC PARTNERS AFFIDAVIT

STATE OF _____)

: SS

COUNTY OF _____)

I, the undersigned hereby duly sworn, depose and say that the firm of _____

_____

provides benefits to domestic partners of its employees on the same basis as it provides benefits to employees' spouses, per City of Key West Code of Ordinances Sec. 2-799.

By:_____

Sworn and subscribed before me this _____ day of _____ 20 ___.

NOTARY PUBLIC, State of Florida at Large

My Commission Expires:

* * * * * *

CONE OF SILENCE AFFIDAVIT

STATE OF _____)

: SS

COUNTY OF _____)

I, the undersigned hereby duly sworn, depose and say that all owner(s), partners, officers, directors, employees and agents representing the firm of _____ have read and understand the limitations and procedures regarding communications concerning City of Key West Code of Ordinances Sec. 2-773 Cone of Silence.

By: _____

Sworn and subscribed before me this

_____ day of _____ 20_____.

_____

NOTARY PUBLIC, State of _____ at Large

My Commission Expires: _____

* * * * * *

NON-COLLUSION AFFIDAVIT

STATE OF FLORIDA)
:
SS COUNTY OF MONROE)

I, the undersigned hereby declares that the only persons or parties interested in this Proposal are those named herein, that this Proposal is, in all respects, fair and without fraud, that it is made without collusion with any official of the Owner, and that the Proposal is made without any connection or collusion with any person submitting another Proposal on this Contract.

By: _____

Sworn and subscribed before me this

_____ day of _____, 2018.

_____

NOTARY PUBLIC, State of Florida at Large

My Commission Expires: _____

APPENDIX A, 44 C.F.R. PART 18 – CERTIFICATION REGARDING LOBBYING
Certification for Contracts, Grants, Loans, and Cooperative Agreements

(To be submitted with each bid or offer exceeding $100,000)

The undersigned CONTRACTOR certifies, to the best of his or her knowledge, that:

1. No Federal appropriated funds have been paid or will be paid, by or on behalf of the undersigned, to any person for influencing or attempting to influence an officer or employee of an agency, a Member of Congress, an officer or employee of Congress, or an employee of a Member of Congress in connection with the awarding of any Federal contract, the making of any Federal grant, the making of any Federal loan, the entering into of any cooperative agreement, and the extension, continuation, renewal, amendment, or modification of any Federal contract, grant, loan, or cooperative agreement.

2. If any funds other than Federal appropriated funds have been paid or will be paid to any person for influencing or attempting to influence an officer or employee of any agency, a Member of Congress, an officer or employee of Congress, or an employee of a Member of Congress in connection with this Federal contract, grant, loan, or cooperative agreement, the undersigned shall complete and submit Standard Form- LLL, "Disclosure Form to Report Lobbying," in accordance with its instructions.

3. The undersigned shall require that the language of this certification be included in the award documents for all sub-awards at all tiers (including subcontracts, subgrants, and contracts under grants, loans, and cooperative agreements) and that all subrecipients shall certify and disclose accordingly.

This certification is a material representation of fact upon which reliance was placed when this transaction was made or entered into. Submission of this certification is a prerequisite for making or entering into this transaction imposed by 31, U.S.C. § 1352 (as amended by the Lobbying Disclosure Act of 1995). Any person who fails to file the required certification shall be subject to a civil penalty of not less than $10,000 and not more than $100,000 for each such failure.

The CONTRACTOR,_____, certifies or affirms the truthfulness and accuracy of each statement of its certification and disclosure, if any. In addition, the Contractor understands and agrees that the provisions of 31 U.S.C. § 3801 *et seq*., apply to this certification and disclosure, if any.

_____
Signature of Contractor's Authorized Official

_____
Name and Title of Contractor's Authorized Official

_____
Date

BIDDER'S CHECKLIST

(Note: The purpose of this checklist is to serve as a reminder of major items to be addressed in submitting a bid and is not intended to be all inclusive. It does not alleviate the Bidder from the responsibility of becoming familiar with all aspects of the Contract Documents and Proper completion and submission of his bid.)

1. All Bid Documents thoroughly read and understood ☐

2. All blank spaces in Bid filled in black ink. ☐

3. Total and unit Prices added correctly. ☐

4. Addenda acknowledged. ☐

5. Bid signed by authorized officer. ☐

6. Bidder familiar with federal, state, and local laws, ordinances, rules and regulations affecting the proposed purchase. ☐

7. Bidder, if successful, able to obtain and/or demonstrate possession of required licenses and certificates within (10) ten days after receiving a Notice of Award. ☐

8. Bid submitted intact with the volume containing the Bidding Requirements, Contract Forms and Conditions of the Contract, one (1) original, two (2) USB drives. ☐

9. Bid Documents submitted in sealed envelope and addressed and labeled in conformance with the instructions in the Invitation to Bid. ☐

10. Anti-kickback Affidavit; Public Entity Crime Form; City of Key West Indemnification Equal Benefits for Domestic Partners Affidavit; Cone of Silence, Lobbying Certificate; Non-Collusion Affidavit and Proof of Insurance ☐

PART 2

CONTRACT FORMS

OWNER-CONTRACT AGREEMENT

THIS AGREEMENT is made by and between the CITY OF KEY WEST, FLORIDA, a Florida municipal corporation, with a physical address of 1300 White Street, Key West, Florida 33040, hereinafter referred to as "CITY" and **(Contractor)**, a Florida corporation, with an address of _____, hereinafter referred to as "CONTRACTOR".

WHEREAS, on September 10, 2017, Hurricane Irma made landfall in the Florida Keys, causing severe flooding and significant wind damage; leaving the CITY littered with debris; creating a public safety hazard; and

WHEREAS, the CITY desires to utilize the services of CONTRACTOR for services resulting from the Natural Disaster on a unit price basis; and

WHEREAS, the CITY has reviewed the rates/estimate included herein and has determined they are a fair price for the services to be provided.

NOW THEREFORE, in consideration of the foregoing and mutual covenants contained in this agreement, the parties agree that:

The BIDDING REQUIREMENTS, including the signed copy of the Bid, the CONTRACT FORMS, CONDITIONS OF THE CONTRACT, TECHNICAL SPECIFICATIONS and the SUPPLEMENTAL INFORMATION are hereby referred to and by reference made a part of this Contract as fully and completely as if the same were fully set forth herein and are mutually cooperative therewith.

CONTRACTOR agrees to provide the following services: CONTRACTOR will provide the CITY the repair/replacement of Hurricane Irma damaged Tarpon Pier at the CITY MARINA @ GARRISON BIGHT ITB #18-037.

The CONTRACTOR shall be certified and licensed by the State of Florida and meet the requirements set forth by the CITY including CITY LICENSURE.

SPECIFIC PROVISIONS

THAT the parties hereby agree to the following specific provisions:

Payment. In consideration of the performance of this Agreement, the CITY agrees to pay CONTRACTOR for services rendered at the amount described in Exhibit A (CONTRACTOR Estimate), attached hereto and incorporated herein by reference. Invoices shall provide sufficient detail and documentation to support the activities and services for the billing period covered by the invoice, including but not limited to the exact dates, percentage and description of work completed for the services provided under this Agreement. Total Contract shall not exceed $_____ (_____ Dollars).

Commencement and Completion. This Agreement will become effective on the date this Agreement is executed, _____, 20__. The initial term of this Agreement shall be negotiated with low bidder.

NOISE ORDINANCE

City of Key West has a noise ordinance that allows working hours between 8:00 AM to 7:00 PM, Monday through Friday. No work should be performed during weekends or City Holidays, State Holidays and National Holidays. Any construction operations outside these hours and these days will require a variance from the City of Key West Commission.

GENERAL PROVISIONS

THAT the parties hereby agree to the following general provisions:

Representations of Contractor: CONTRACTOR represents that is has sufficient manpower and technical expertise to perform the services contemplated by this Agreement in a timely and professional manner consistent with the standards of the industry in which CONTRACTOR operates, and that all technical personnel have State of Florida certification within their discipline(s). CONTRACTOR warrants that its services under this Agreement shall be performed in a thorough, efficient, and workmanlike manner, promptly and with due diligence and care, and in accordance with all applicable codes and laws.

Representations of the CITY: The CITY represents that it is duly organized and existing as a Municipal Corporation political subdivision of the State of Florida. Further, the CITY has the full power and authority to enter into the transactions contemplated by this Agreement and has the ownership and/or control over the property which is the subject of this Agreement or which shall be serviced thereby.

INDEPENDENT CONTRACTOR

It is specifically agreed that CONTRACTOR is deemed to be an independent CONTRACTOR for the purposes set forth in this subsection. Accordingly, it is further agreed that no agent, employee, or servant of CONTRACTOR shall be entitled to any benefits provided by the CITY to its employees, including but not limited to compensation insurance and unemployment insurance. CONTRACTOR will be responsible for its acts and for the acts of its agents, employees, servants and sub-CONTRACTOR's during the performance of this Agreement. Notwithstanding anything herein to the contrary, CONTRACTOR and its agents, servants, and/or employees, while acting within the scope of this Agreement shall be deemed to be an agent of the CITY for purposes of Florida Statute 768.28; however, the CITY shall not have to defend CONTRACTOR and/or its agents, servants, and employees in any action brought by the Florida Department of Professional Regulation or the Board as required by Florida Statute 468.619(5). Although CONTRACTOR is an independent CONTRACTOR, the work contemplated herein must meet the approval of the CITY and shall be subject to the CITY's general right of inspection to secure the satisfactory completion thereof. CONTRACTOR agrees to comply with all Federal, State and municipal laws, rules and regulations that are now or may in the future become applicable to CONTRACTOR, CONTRACTOR's business, equipment or

personnel engaged in operations covered by this Agreement or accruing out of the performance of such operations. The CITY will not be held responsible for the collection of or the payment of taxes or contributions of any nature on behalf of CONTRACTOR.

CONTRACTOR agrees that it shall bear the responsibility for verifying the employment status, under the Immigration Reform and Control Act of 1986, of all persons it employs in the performance of this Agreement.

ACCEPTANCE OF WORK PRODUCT, PAYMENT AND WARRANTY

Upon receipt of a periodic work product, together with an invoice sufficiently itemized to permit audit, the CITY will diligently review same. Payment, found to be due CONTRACTOR, will be **paid to CONTRACTOR within 45 DAYS after the date of receipt of the invoice**. CONTRACTOR warrants that the data utilized by CONTRACTOR (other than as provided by the CITY) is from a source, and collected using methodologies, which are generally recognized in CONTRACTOR's industry or profession to be a reliable basis and foundation for CONTRACTOR's work product. CONTRACTOR shall notify the CITY in writing should it appear, in CONTRACTOR's professional judgment that the data or information provided by the CITY for use in CONTRACTOR's work product is incomplete, defective or unreliable. CONTRACTOR guarantees to amend, revise or correct to the satisfaction of the CITY any error appearing in the work as a result of CONTRACTOR's, failure to comply with the warranties and representations contained herein. Neither inspection nor payment, including final payment by the CITY shall relieve CONTRACTOR from its obligations to do and complete the work product in accordance with this Agreement.

PUBLIC RECORDS

All records prepared or maintained by CONTRACTOR in accordance with the Scope of Services, shall be deemed to be public records. CONTRACTOR shall allow public access to such documents and materials in accordance with the provisions of Chapter 119, Florida Statutes. Should _CONTRACTOR assert any exemptions to the requirements of Chapter 119 and related statutes, the burden of establishing such exemption, by way of injunctive or other relief as provided by law, shall be upon CONTRACTOR. The CITY reserves the right to unilaterally cancel this Agreement for refusal by _CONTRACTOR to allow public access to all such documents, subject to the Provisions of Chapter 119, Florida Statutes, and made or received by CONTRACTOR in conjunction with this Agreement. All documents hereinabove referred to shall be maintained and kept for public inspection at the CITY of Key West City Hall.

MISCELLANANEOUS PROVISIONS

The parties hereby agree to the following miscellaneous provisions:

a. Discrimination: That CONTRACTOR shall assure that no person shall be excluded, on the grounds of race, color, creed, national origin, handicap, age or sex, religion, ancestry, marital status, gender, gender identification, sexual orientation, and physical characteristics from participation in, denied the benefits of, or be otherwise

subjected to discrimination in any activity under this Agreement. CONTRACTOR shall take all measures necessary to effectuate these assurances.

b. Severability: That, should any term or provision of this Agreement be held, to any extent, invalid or unenforceable, as against any person, entity or circumstance during the term hereof, by force of any statute, law, or ruling of any forum of competent jurisdiction, such invalidity shall not affect any other term or provision of this Agreement, to the extent that the Agreement shall remain operable, enforceable and in full force and effect to the extent permitted by law.

c. Entire Agreement: That this Agreement states the entire understanding between the parties and supersedes any written or oral representations, statements, negotiations or agreements to the contrary. CONTRACTOR recognizes that any representations, statements or negotiations made by the CITY staff do not suffice to legally bind the CITY in a contractual relationship unless they have been reduced to writing, authorized and signed by the authorized CITY representatives.

d. Construction: Should any provision of this Agreement be subject to judicial interpretation, it is agreed that the court interpreting or considering such provision will not apply the presumption or rule of construction that the terms of this Agreement be more strictly construed against the party which itself or through its counsel or other agent prepared the same, as all parties hereto have participated in the preparation of the final form of this Agreement through review by their respective counsel, if any, and/or the negotiation of specific language and therefore the application of such presumption or rule of construction would be inappropriate and contrary to the intent of the parties.

e. Attorney's Fees: In the event of any litigation to enforce the terms of this Agreement, the prevailing party shall be entitled to reasonable attorney's fees and costs which are directly attributed to such litigation both at the trial and appellate level.

f. Waiver: The indulgence of either party with regard to any breach or failure to perform any provision of this Agreement shall not be deemed to constitute a waiver of the provision or any portion of this Agreement, either at the time the breach or failure occurs or at any time throughout the term of this Agreement. The review of, approval of, or payment for any of CONTRACTOR's work product, services, or materials shall not be construed to operate as a waiver of any of the CITY's rights under this Agreement, or of any cause of action the CITY may have arising out of the performance of this Agreement.

g. Force Majeure: Notwithstanding any provisions of this Agreement to the contrary, the parties shall not be held liable if failure or delay in the performance of this Agreement arises from fires, floods, strikes, embargos, acts of the public enemy, unusually severe weather, outbreak of war, restraint of government, riots, civil commotion, force majeure, act of God, or for any other cause of the same character which is unavoidable through the exercise of due care and beyond the control of the parties. This provision shall not apply if the "Scope of Work" of this Agreement specifies that performance by

CONTRACTOR is specifically required during the occurrence of any of the events herein mentioned.

h. Headings: All headings are for clarification only and are not to be used in any judicial construction of this Agreement or any paragraph.

i. Binding Nature of Agreement: This Agreement shall be binding upon the successors and assigns of the parties hereto.

j. Law; Venue: This Agreement is being executed in the CITY of Key West, Florida and shall be governed in accordance with the laws of the State of Florida. Venue for any action brought to enforce this agreement or for breach thereof shall lie in Monroe County, Florida

k. Termination for Cause or Convenience:

1) This contract may be terminated in whole or in part in writing by either party in the event of substantial failure by the other party to fulfill its obligations under this contract through no fault of the terminating party, provided that no termination may be effected unless the other party is given:
    i. Not less than ten (10) calendar days written notice (delivered by certified mail, return receipt requested) of intent to terminate; and
    ii. An opportunity for consultation with the terminating party prior to termination.

2) This contract may be terminated in whole or in part in writing by the local government for its convenience, provided that the other party is afforded the same notice and consultation opportunity specified in l (a) above. If termination for default is effected by the local government, an equitable adjustment in the price for this contract shall be made, but no amount shall be allowed for anticipated profit on unperformed services or other work, and any payment due to the CONTRACTOR at the time of termination may be adjusted to cover any additional costs to the local government because of the CONTRACTOR's default.

3) If termination for convenience is effected by the local government, the equitable adjustment shall include a reasonable profit for services or other work performed for which profit has not already been included in an invoice. For any termination, the equitable adjustment shall provide for payment to the CONTRACTOR for services rendered and expenses incurred prior to receipt of the notice of intent to terminate, in addition to termination settlement costs reasonably incurred by the CONTRACTOR relating to commitments (e.g., suppliers, sub-CONTRACTORs) which had become firm prior to receipt of the notice of intent to terminate.

4) Upon receipt of a termination action under paragraphs (a) or (b) above, the CONTRACTOR shall
    iii. promptly discontinue all affected work (unless the notice directs otherwise) and

iv. deliver or otherwise make available to the local government all data, drawings, reports specifications, summaries and other such information, as may have been accumulated by the CONTRACTOR in performing this contract, whether completed or in process.

l. Federal Regulations: Federal regulations apply to all of the CITY of Key West contracts using Federal funds as a source for the solicitation of goods and services.

FEDERAL REQUIREMENTS

In addition to the terms of Appendix II to 2 C.F.R. Part 200, which are attached as Exhibit B and incorporated herein, the following Federal requirements also apply to this Emergency Agreement:

a. ACCESS BY THE GRANTEE, SUBGRANTEE, FEDERAL GRANTOR AGENCY AND COMPTROLLER GENERAL: The CONTRACTOR shall allow access by the grantee, sub-grantee, Federal grantor agency and Comptroller General of the United States, or any of their duly authorized representatives to any books, documents, papers, and records of the CONTRACTOR which are directly pertinent to that specific contract for the purpose of making audit, examination, excerpts and transcriptions.

b. COPYRIGHTS: The Grantee is free to copyright original work developed in the course of or under the agreement. FEMA reserves a royalty-free, nonexclusive and irrevocable right to reproduce, publish, or otherwise use, and to authorize others to use the work for Government purposes. Publication resulting from work performed under this agreement shall include an acknowledgement of FEMA financial support, by granted number, and a statement that the publication does not constitute an endorsement by FEMA or reflect FEMA views.

c. DISADVANTAGED BUSINESS ENTERPRISES (DBE) CONTRACTORS: The CONTRACTOR agrees to ensure that Disadvantage Business Enterprises as defined in 49 C.F.R. Part 23, as amended, have the maximum opportunity to participate in the performance of contracts and this agreement. In this regard, CONTRACTOR shall take all necessary and reasonable steps in accordance with 49 C.F.R. Part 23, as amended, to ensure that the Disadvantaged Business Enterprises have the maximum opportunity to compete for and perform contracts. The CONTRACTOR shall not discriminate on the basis of race, color, national origin or sex in the award and performance of federal assisted contracts.

d. ENERGY POLICY AND CONSERVATION ACT: The CONTRACTOR shall comply with mandatory standards and policies relating to energy efficiency which are contained in the state energy conservation plan issued in compliance with the Energy Policy and Conservation Act (Pub. L. 94-163).

e. EQUAL EMPLOYMENT OPPORTUNITY: During the performance of this contract, the CONTRACTOR agrees as follows:

i. The CONTRACTOR will not discriminate against any employee or applicant for employment because of race, color, religion, sex, or national origin. The CONTRACTOR will take affirmative action to ensure that applicants are employed, and that employees are treated during employment without regard to their race, color, religion, sex, or national origin. Such action shall include, but not be limited to the following: Employment, upgrading, demotion, or transfer; recruitment or recruitment advertising; layoff or termination; rates of pay or other forms of compensation; and selection for training, including apprenticeship. The CONTRACTOR agrees to post in conspicuous places, available to employees and applicants for employment, notices to be provided setting forth the provisions of this nondiscrimination clause.

ii. The CONTRACTOR will, in all solicitations or advertisements for employees placed by or on behalf of the CONTRACTOR, state that all qualified applicants will receive considerations for employment without regard to race, color, religion, sex, or national origin.

iii. The CONTRACTOR will send to each labor union or representative of workers with which he has a collective bargaining agreement or other contract or understanding, a notice to be provided advising the said labor union or workers' representatives of the CONTRACTOR's commitments under this section, and shall post copies of the notice in conspicuous places available to employees and applicants for employment.

iv. The CONTRACTOR will comply with all provisions of Executive Order 11246 of September 24, 1965, and of the rules, regulations, and relevant orders of the Secretary of Labor.

v. The CONTRACTOR will furnish all information and reports required by Executive Order 11246 of September 24, 1965, and by rules, regulations, and orders of the Secretary of Labor, or pursuant thereto, and will permit access to his books, records, and accounts by the administering agency and the Secretary of Labor for purposes of investigation to ascertain compliance with such rules, regulations, and orders.

vi. In the event of the CONTRACTOR's noncompliance with the nondiscrimination clauses of this contract or with any of the said rules, regulations, or orders, this contract may be canceled, terminated, or suspended in whole or in part and the CONTRACTOR may be declared ineligible for further Government contracts or federally assisted construction contracts in accordance with procedures authorized in Executive Order 11246 of September 24, 1965, and such other sanctions as may be imposed and remedies invoked as provided in Executive Order 11246 of September 24, 1965, or by rule, regulation, or order of the Secretary of Labor, or as otherwise provided by law.

vii. The CONTRACTOR will include the portion of the sentence immediately preceding paragraph (1) and the provisions of paragraphs (1) through (7) in every

subcontract or purchase order unless exempted by rules, regulations, or orders of the Secretary of Labor issued pursuant to section 204 of Executive Order 11246 of September 24, 1965, so that such provisions will be binding upon each sub-CONTRACTOR or vendor. The CONTRACTOR will take such action with respect to any subcontract or purchase order as the administering agency may direct as a means of enforcing such provisions, including sanctions for noncompliance: Provided, however, That in the event a CONTRACTOR becomes involved in, or is threatened with, litigation with a sub-CONTRACTOR or vendor as a result of such direction by the administering agency the CONTRACTOR may request the United States to enter into such litigation to protect the interests of the United States.

viii. CONTRACTOR shall:

1. Place qualified small and minority businesses and women's business enterprises on solicitation lists.
2. Assure that small and minority businesses and women's business enterprises are solicited whenever they are potential sources.
3. Divide work, when economically feasible, into smaller tasks to permit maximum participation by small and minority businesses, and women's business enterprises.
4. Establish delivery schedules, where the requirement permits, which encourage participation by small and minority businesses, and women's business enterprises.
5. Provide documentation of compliance with 1-4 above.

f. CONTRACT WORK HOURS AND SAFETY STANDARDS ACT COMPLIANCE

i. Overtime requirements. No contractor or subcontractor contracting for any part of the contract work which may require or involve the employment of laborers or mechanics shall require or permit any such laborer or mechanic in any workweek in which he or she is employed on such work to work in excess of forty hours in such workweek unless such laborer or mechanic receives compensation at a rate not less than one and one-half times the basic rate of pay for all hours worked in excess of forty hours in such workweek.

ii. Violation; liability for unpaid wages; liquidated damages. In the event of any violation of the clause set forth in paragraph (1) of this section the contractor and any subcontractor responsible therefor shall be liable for the unpaid wages. In addition, such contractor and subcontractor shall be liable to the United States, for liquidated damages. Such liquidated damages shall be computed with respect to each individual laborer or mechanic, including watchmen and guards, employed in violation of the clause set forth in paragraph (1) of this section, in the sum of $10 for each calendar day on which such individual was required or permitted to work in excess of the standard workweek of forty hours without payment of the overtime wages required by the clause set forth in paragraph (1) of this section.

iii. Withholding for unpaid wages and liquidated damages. The Federal Emergency Management Agency (FEMA) shall upon its own action or upon written request of an authorized representative of the Department of Labor withhold or cause to be withheld, from any moneys payable on account of work performed by the contractor or subcontractor under any such contract or any other Federal contract with the same prime contractor, or any other federally-assisted contract subject to the Contract Work Hours and Safety Standards Act, which is held by the same prime contractor, such sums as may be determined to be necessary to satisfy any liabilities of such contractor or subcontractor for unpaid wages and liquidated damages as provided in the clause set forth in paragraph (2) of this section.

iv. Subcontracts. The contractor or subcontractor shall insert in any subcontracts the clauses set forth in paragraph (1) through (4) of this section and also a clause requiring the subcontractors to include these clauses in any lower tier subcontracts. The prime contractor shall be responsible for compliance by any subcontractor or lower tier subcontractor with the clauses set forth in paragraphs (1) through (4) of this section."

g. CLEAN AIR ACT

i. The contractor agrees to comply with all applicable standards, orders or regulations issued pursuant to the Clean Air Act, as amended, 42 U.S.C. § 7401 et seq.

The contractor agrees to report each violation to the City of Key West and understands and agrees that the City of Key West will, in turn, report each violation as required to assure notification to the Federal Emergency Management Agency, and the appropriate Environmental Protection Agency Regional Office. The contractor agrees to include these requirements in each subcontract exceeding $150,000 financed in whole or in part with Federal assistance provided by FEMA.

h. FEDERAL WATER POLLUTION CONTROL ACT

i. The contractor agrees to comply with all applicable standards, orders or regulations issued pursuant to the Federal Water Pollution Control Act, as amended, 33 U.S.C. 1251 et seq.

The contractor agrees to report each violation to the City of Key West and understands and agrees that the City of Key West will, in turn, report each violation as required to assure notification to the Federal Emergency Management Agency, and the appropriate Environmental Protection Agency Regional Office.

The contractor agrees to include these requirements in each subcontract exceeding $150,000 financed in whole or in part with Federal assistance provided by FEMA."

i. DEBARMENT AND SUSPENSION:

i. This contract is a covered transaction for purposes of 2 C.F.R. pt.180 and 2 C.F.R. pt. 3000. As such the CONTRACTOR is required to verify that none of the CONTRACTOR, its principals (defined at 2 C.F.R. § 180.995), or its affiliates (defined at 2 C.F.R. § 180.905) are excluded (defined at 2 C.F.R.§ 180.940) or disqualified (defined at 2 C.F.R. § 180.935).

ii. The CONTRACTOR must comply with 2 C.F.R. pt. 180, subpart C and 2C.F.R. pt. 3000, subpart C and must include a requirement to comply with these regulations in any lower tier covered transaction it enters into.

iii. This certification is a material representation of fact relied upon by (insert name of sub-recipient). If it is later determined that the CONTRACTOR did not comply with 2 C.F.R. pt. 180, subpart C and 2 C.F.R. pt. 3000, subpart C, in addition to remedies available to (name of state agency serving as recipient and name of sub-recipient), the Federal Government may pursue available remedies, including but not limited to suspension and/or debarment.

iv. The bidder or proposer agrees to comply with the requirements of 2 C.F.R. pt. 180, subpart C and 2 C.F.R. pt. 3000, subpart C while this offer is valid and throughout the period of any contract that may arise from this offer. The bidder or proposer further agrees to include a provision requiring such compliance in its lower tier covered transactions.

j. BYRD ANTI-LOBBYING AMENDMENT,

Byrd Anti-Lobbying Amendment, 31 U.S.C. § 1352 (as amended)

i. Contractors who apply or bid for an award of $100,000 or more shall file the required certification. Each tier certifies to the tier above that it will not and has not used Federal appropriated funds to pay any person or organization for influencing or attempting to influence an officer or employee of any agency, a member of Congress, officer or employee of Congress, or an employee of a member of Congress in connection with obtaining any Federal contract, grant, or any other award covered by 31 U.S.C. § 1352. Each tier shall also disclose any lobbying with non-Federal funds that takes place in connection with obtaining any Federal award. Such disclosures are forwarded from tier to tier up to the recipient.

ii. Attach Certification for Contracts, Grants, Loans, and Cooperative Agreements submitted with bid if exceeding $100,000)

k. PROCUREMENT OF RECOVERED MATERIALS

i. In the performance of this contract, the CONTRACTOR shall make maximum use of products containing recovered materials that are EPA- designated items unless the product cannot be acquired-

(i) Competitively within a timeframe providing for compliance with the contract performance schedule;
(ii) Meeting contract performance requirements; or
(iii) At a reasonable price.

ii. Information about this requirement, along with the list of EPA- designate items, is available at EPA's Comprehensive Procurement Guidelines web site, https://www.epa.gov/smm/comprehensive-procurement-guideline-cpg-program."

l. RETENTION OF ALL RECORDS: The CONTRACTOR is required to retain all records for seven (7) years after grantees or sub-grantees make final payments and all other pending matters are closed.

ADDITIONAL FEDERAL REQUIREMENTS

a. REMEDIES – In the event of a breach by CONTRACTOR of the terms and conditions of this Agreement CITY shall be entitled to recover any and all monetary damages arising therefrom including the recovery of reasonable attorney fees at all trial and appellate levels.

b. ACCESS TO RECORDS

i. The CONTRACTOR agrees to provide (insert name of state agency or local or Indian tribal government), (insert name of recipient), the FEMA Administrator, the Comptroller General of the United States, or any of their authorized representatives access to any books, documents, papers, and records of the CONTRACTOR which are directly pertinent to this contract for the purposes of making audits, examinations, excerpts, and transcriptions.

ii. The CONTRACTOR agrees to permit any of the foregoing parties to reproduce by any means whatsoever or to copy excerpts and transcriptions as reasonably needed.

iii. The CONTRACTOR agrees to provide the FEMA Administrator or his authorized representatives access to construction or other work sites pertaining to the work being completed under the contract.

b. DHS SEAL, LOGA AND FLAGS: the CONTRACTOR shall not use the DHS seal(s), logos, crests, or reproductions of flags or likenesses of DHS agency officials without specific FEMA pre- approval.

c. COMPLIANCE WITH FEDERAL LAW, REGUATIONS AND EXECUTIVE ORDERS: This is an acknowledgement that FEMA financial assistance will be used to fund the contract only. The CONTRACTOR will comply will all applicable federal law, regulations, executive orders, FEMA policies, procedures, and directives.

d. NO OBLIGATION: The Federal Government is not a party to this contract and is not subject to any obligations or liabilities to the non-Federal entity, CONTRACTOR, or any other party pertaining to any matter resulting from the contract."

e. FRAUD AND FALSE OR FRAUDULENT OR RELATED ACTS: The CONTRACTOR acknowledges that 31 U.S.C. Chap. 38 (Administrative Remedies for False Claims and Statements) applies to the CONTRACTOR's actions pertaining to this contract.

IN WITNESS WHEREOF, the parties hereto have made and executed this Agreement as of the day and year last executed below.

CITY OF KEY WEST

By_____
James K. Scholl, City Manager

CONTRACTOR

By_____

Printed_____

Title_____

APPROVED AS TO FORM

_____
Attorney for Owner

* * * * * *

FLORIDA PERFORMANCE BOND

BOND NO._____

AMOUNT: $_____

KNOW ALL MEN BY THESE PRESENTS, that in accordance with Florida Statutes Section

255.05 _____

with offices at _____

hereinafter called the CONTRACTOR (Principal), and

_____

with offices at_____

a corporation duly organized and existing under and by virtue of the laws of the State of Florida, hereinafter called the SURETY, and authorized to transact business within the State of Florida, as SURETY, are held and firmly bound unto the **CITY OF KEY WEST,** hereinafter called the CITY (Obligee), in the sum of:

_____DOLLARS ($_____), lawful money of the United States of America, for the payment of which, well and truly be made to the CITY, the CONTRACTOR and the SURETY bind themselves and each of their heirs, executors, administrators, successors, and assigns, jointly and severally, firmly by these presents as follows:

THE CONDITION OF THE ABOVE OBLIGATION IS SUCH THAT:
WHEREAS, the CONTRACTOR has executed and entered into a certain Contract hereto attached, with the CITY, dated _____, 20__, to furnish at his own cost, charges, and expense all the necessary materials, equipment, and/or labor in strict and express accordance with said Contract and the Contract Documents as defined therein, all of which is made a part of said Contract by certain terms and conditions in said Contract more particularly mentioned, which Contract, consisting of the various Contract Documents is made a part of this Bond as fully and completely as if said Contract Documents were set forth herein;

NOW THEREFORE, the conditions of this obligation are such that if the above bounden CONTRACTOR:

1. Shall in all respects comply with the terms and conditions of said Contract and his obligation there under, including the Contract Documents (which include the scope of work and conditions as prepared by the CITY, invitation to bid, instructions to bidders, the CONTRACTOR'S bid as accepted by the above CITY, the bid and contract performance and payment bonds (Not required

as part of this contract), and all addenda, if any, issued prior to the opening of bids), being made a part of this bond by reference, at the times and in the manner prescribed in the contract; and

2. Promptly makes payments to all claimants, as defined in Section 255.05(1), Florida Statutes, supplying PRINCIPAL with labor, materials, or supplies, used directly or indirectly by PRINCIPAL in the prosecution of the work provided for in the contract; and

3. Pays CITY all losses, costs, expenses, damages, attorney's fees, including appellate proceedings, injury or loss of whatever kind and however arising including, without limitation, delay damages to which said CITY may be subject by reason of any wrongdoing, misconduct, want of care or skill, negligence, failure of performance, breach, failure to petition within the prescribed time, or default, including patent infringements, on the part of said CONTRACTOR, his agents or employees, in the execution or performance of said Contract; and

4. Performs the guarantee of all work and materials furnished under the contract for the time specified in the contract, then this obligation shall be void; otherwise, to remain in full force and effect for the term of said Contract.

AND, the said Surety for value received, hereby stipulates and agrees that no change involving any extension of time, or addition to the terms of the Contract Documents, or to the work to be performed, or materials to be furnished there under shall affect said obligation of said Surety on this Bond, and the said Surety does hereby waive notice of any such changes, extension of time, alterations, or additions of the terms of the Contract Documents, or to the work.

Any action instituted by a claimant under this bond for payment must be in accordance with the notice and time limitation provisions in Section 255.05(2), Florida Statutes.

IN WITNESS WHEREOF, the above parties bonded together have executed this instrument

this _____ day of _____, 20__, the name and corporate seal of each corporate party being hereto affixed and those presents duly signed by its undersigned representative, pursuant to authority of its governing body.

CONTRACTOR

By: _____

(SEAL)

ATTEST

SURETY

By: _____

(SEAL)

ATTEST

FLORIDA PAYMENT BOND

BOND NO._____

AMOUNT: $_____

KNOW ALL MEN BY THESE PRESENTS, that in accordance with Florida Statutes Section

255.05,_____

with offices at_____
hereinafter called the CONTRACTOR, (Principal), and

_____

with offices at _____

a corporation duly organized and existing under and by virtue of the laws of the State of

_____ , hereinafter called the SURETY, and authorized to transact business within the State of Florida, as SURETY, are held and firmly bound unto CITY OF KEY WEST**,** hereinafter called the City (Obligee), in the sum of:

_____DOLLARS(_____), lawful money of the United States of America, for the payment of which, well and truly be made to the CITY, and the CONTRACTOR and the SURETY bind themselves and each of their heirs, executors, administrators, successors, and assigns, jointly and severally, firmly by these presents as follows:

THE CONDITION OF THE ABOVE OBLIGATION IS SUCH THAT:

WHEREAS, the CONTRACTOR has executed and entered into a certain Contract for

ITB #18-037 CITY MARINA @ GARRISON BIGHT - TARPON PIER REPAIR – HURRICANE IRMA DAMAGE attached hereto, with

the CITY, dated_____

_____, 20__, to furnish at his own cost, charges, and expense the necessary materials, equipment, and/or labor in strict and express accordance with said Contract and the plans, drawings (if any), and specifications prepared by the CITY, all of which is made a part of said Contract by certain terms and conditions in said Contract more particularly mentioned, which Contract, consisting of the various Contract Documents specifically mentioned herein and relative hereto, is made a part of this Bond as fully and completely as if said Contract Documents were set forth herein.

NOW THEREFORE, the conditions of this obligation are such that if the above bounden CONTRACTOR shall in all respects comply with the terms and conditions of said Contract and his obligation thereunder, including the Contract Documents ,which include Scope of work and conditions prepared by the CITY, invitation to bid, instructions to bidders, the

CONTRACTOR'S bid as accepted by the CITY, the bid and contract and payment bonds (Not required as part of this contract), and all addenda, if any, issued prior to the opening of bids), and further that if said CONTRACTOR shall promptly make payments to all persons supplying materials, equipment, and/or labor, used directly or indirectly by said CONTRACTOR or subcontractors in the prosecution of the work for said contract is accordance with Florida Statutes, Section 255.05 or Section 713.23, then this obligation shall be void; otherwise to remain in full force and effect for the term of said contract, including and all guarantee periods as specifically mentioned in said Contract Documents.

AND, the said SURETY for value received, hereby stipulates and agrees that no change involving any extension of time, or addition to the terms of the Contract or to the work to be performed, or materials to be furnished thereunder, or in the Contract Documents and specifications accompanying the said contract shall affect said obligation of said SURETY on this Bond, and the said SURETY does hereby waive notice of any such changes, extension of time, alternations, or additions of the terms of the Contract, or to the work, to the Contract Documents, or to the specifications.

Claimant shall give written notice to the CONTRACTOR and the SURETY as required by Section 255.05 or Section 713.23, Florida Statutes. Any action instituted against the CONTRACTOR or SURETY under this bond for payment must be in accordance with the notice and time limitation provisions in Section 255.05(2) or Section 713.23, Florida Statutes.

IN WITNESS WHEREOF, the above parties bounded together have executed this instrument

this _____ day of _____, 20__, the name and corporate seal of each corporate party being hereto affixed and those presents duly signed by its undersigned representative, pursuant to authority of its governing body.

CONTRACTOR

By:_____

(SEAL)

ATTEST

SURETY

By:_____

(SEAL)

ATTEST

LICENSE REQUIREMENT AND COST

License required for this Project. Contractor must be general contractor or building contractor.

Cost Not To Exceed $410.00.

CITY OF KEY WEST BUSINESS LICENSE TAX RECEIPT

A City of Key West Business License Tax Receipt is required for this project. Contractor must be general contractor, building contractor or engineering contractor. Cost not to exceed $410.00.

City of Key West Business License Tax Receipt may be found on the city website.

http://www.keywestcity.com/egov/docs/1162843921181.htm

PART 3

CONDITIONS OF THE CONTRACT

GENERAL CONDITIONS

Article

DEFINITIONS
1. AS APPROVED
2. AS SHOWN, AND AS INDICATED
3. BIDDER
4. CONTRACT DOCUMENTS
5. CONTRACTOR
6. CONTRACT COMPLETION
7. DAYS
8. DRAWINGS
9. ENGINEER
10. NOTICE
11. OR EQUAL
12. OWNER
13. PLANS
14. SPECIFICATIONS
15. NOTICE TO PROCEED
16. SUBSTANTIAL COMPLETION
17. WORK

CONTRACT DOCUMENTS
18. INTENT OF CONTRACT DOCUMENTS
19. DISCREPANCIES AND OMISSIONS
20. CHANGES IN THE WORK
21. EXAMINATION AND VERIFICATION OF CONTRACT DOCUMENTS
22. DOCUMENTS TO BE KEPT ON THE JOBSITE
23. ADDITIONAL CONTRACT DOCUMENTS
24. OWNERSHIP OF CONTRACT DOCUMENTS

THE ENGINEER
25. AUTHORITY OF THE ENGINEER
26. DUTIES AND RESPONSIBILITIES OF THE ENGINEER
27. LIMITATIONS ON ENGINEER'S RESPONSIBILITIES
28. REJECTED WORK
29. LINES AND GRADES
30. SUBMITTALS
31. DETAIL DRAWINGS AND INSTRUCTIONS

THE CONTRACTOR AND HIS EMPLOYEES
32. CONTRACTOR, AN INDEPENDENT AGENT
33. SUBCONTRACTING
34. INSURANCE AND LIABILITY
    A. GENERAL
    B. CONTRACTOR AND SUB-CONTRACTOR INSURANCE
    C. COMPENSATION AND EMPLOYER'S LIABILITY INSURANCE
    D. GENERAL LIABILITY INSURANCE (INCLUDING AUTOMOBILE)
    E. BUILDER'S RISK ALL RISK INSURANCE
    F. NO PERSONAL LIABILITY OF PUBLIC OFFICIALS
35. INDEMNITY
36. EXCLUSION OF CONTRACTOR CLAIMS
37. TAXES AND CHARGES
38. REQUIREMENTS OF STATE LAW FOR PUBLIC WORKS PROJECTS
39. CODES, ORDINANCES, PERMITS, AND LICENSES
40. SUPERINTENDENCE
41. RECEPTION OF ENGINEER'S COMMUNICATIONS
42. SAFETY
43. PROTECTION OF WORK AND PROPERTY
44. RESPONSIBILITY OF CONTRACTOR TO ACT IN AN EMERGENCY
45. MATERIALS AND APPLIANCES
46. CONTRACTOR’S AND MANUFACTURERS’ COMPLIANCE WITH STATE SAFETY, OSHA, AND OTHER CODE REQUIREMENTS
47. SUBSTITUTION OF MATERIALS
48. TESTS, SAMPLES, AND OBSERVATIONS
49. ROYALTIES AND PATENT
50. CONTRACTOR'S RIGHT TO TERMINATE CONTRACT
51. CORRECTION OF DEFECTIVE WORK DURING WARRANTY PERIOD

PROGRESS OF THE WORK
52. BEGINNING OF THE WORK
53. SCHEDULES AND PROGRESS REPORTS
54. PROSECUTION OF THE WORK
55. OWNER'S RIGHT TO RETAIN IMPERFECT WORK
56. OWNER'S RIGHT TO DO WORK
57. OWNER'S RIGHT TO TRANSFER EMPLOYMENT
58. DELAYS AND EXTENSION OF TIME
59. DIFFERING SITE CONDITIONS

Article

60. LIQUIDATED DAMAGES
61. OTHER CONTRACTS
62. USE OF PREMISES
63. SUBSTANTIAL COMPLETION DATE
64. PERFORMANCE TESTING
65. OWNER'S USE OF PORTION OF THE WORK
66. CUTTING AND PATCHING
67. CLEANING UP

PAYMENT

68. CHANGE ORDERS
    A. UNIT PRICE
    B. LUMP SUM
    C. COST REIMBURSEMENT WORK
69. PARTIAL PAYMENTS
    A. GENERAL
    B. ESTIMATE
    C. DEDUCTION FROM ESTIMATE
    D. QUALIFICATIONS FOR PARTIAL PAYMENT FOR MATERIALS DELIVERED
    E. PAYMENT
70. CLAIMS FOR EXTRA WORK
71. RELEASE OF LIENS OR CLAIMS
72. FINAL PAYMENT
73. NO WAIVER OF RIGHTS
74. ACCEPTANCE OF FINAL PAYMENT CONSTITUTES RELEASE

* * * * * * *

DEFINITIONS

Whenever in the Contract Documents the following terms are used, the intent and meaning shall be interpreted as follows:

1. AS APPROVED

The words "as approved", unless otherwise qualified, shall be understood to be followed by the words "by the ENGINEER for conformance with the Contract Document".

2. AS SHOWN, AND AS INDICATED

The words "as shown" and "as Indicated" shall be understood to be followed by the words "on the Drawings".

3. BIDDER

The person or persons, partnership, firm, or corporation submitting a Bid for the work contemplated.

4. CONTRACT DOCUMENTS

The "Contract Documents" consist of the Bidding Requirements, Contract Forms, Conditions of the Contact, Specifications, Drawings, all modifications thereof incorporated into the Documents before their execution, Change Orders, and all other requirements incorporated by specific reference thereto. These form the Contract.

5. CONTRACTOR

The person or persons, partnership, firm, or corporation who enters into the Contract awarded him by the OWNER.

6. CONTRACT COMPLETION

The "Contract Completion" is the date the OWNER accepts the entire work as being in compliance with the Contract Documents, or formally waives nonconforming work to extent of nonconformity, and issues the final payment in accordance with the requirements set forth in Article, "Final Payment" of these General Conditions.

7. DAYS

Unless otherwise specifically stated, the term "days" will be understood to mean calendar days. Business day or working day means any day other than Saturday, Sunday, or legal holiday.

8. DRAWINGS

The term "Drawings" refers to the official Drawings, profiles, cross sections, elevations, details, and other working drawings and supplementary drawings, or reproductions thereof, signed by the ENGINEER, which shows the location, character, dimensions, and details of the work to be performed. Drawings may either be bound in the same book as the balance of the Contract Documents, or bound in separate sets, and are a part of the Contract Documents, regardless of the method of binding.

9. ENGINEER

The person or organization identified as such in the Contract Documents. The Term "ENGINEER" means ENGINEER or his authorized representative.

10. NOTICE

The term "notice" or the requirement to notify, as used in the Contract Documents or applicable state or federal statutes, shall signify a written communication delivered in person or by registered mail to the individual, or to a member of the firm, or to an officer of the corporation for whom it is intended. Certified or registered mail shall be addressed to the last business address known to him who gives the notice.

11. OR EQUAL

The term "or equal" shall be understood to indicate that the "equal" product is equivalent to or better than the product named in function, performance, reliability, quality, and general configuration. Determination of equality in reference to the project design requirements will be made by the ENGINEER. Such equal products shall not be purchased or installed by the CONTRACTOR without written authorization.

12. OWNER

The person, organization, or public body identified as such in the Contract Documents.

13. PLANS (See Drawings)

14. SPECIFICATIONS

The term "Specifications" refers to those portions of the Contract Documents consisting of written technical

descriptions of materials, equipment, construction systems, standards, and workmanship as applied to the work and certain
administrative details applicable thereto. Where standard specifications, such as those of ASTM, AASHTO, etc., have been referred to, the applicable portions of such standard specifications shall become a part of these Contract Documents. If referenced specifications conflict with specifications contained herein, the requirements contained herein shall prevail.

15. NOTICE TO PROCEED

A written notices given by the OWNER to the CONTRACTOR (with a copy to the ENGINEER) fixing the date on which the Contract time will commence to run and on which the CONTRACTOR shall start to perform his obligation under the Contract Documents. The Notice to Proceed will be given within 30 days following the execution of the Contract by the OWNER.

16. SUBSTANTIAL COMPLETION

"Substantial Completion" shall be that degree of completion of the Project or a defined portion of the Project, as evidenced by the ENGINEER's written notice of Substantial Completion, sufficient to provide the OWNER, at his discretion, the full-time use of the Project or defined portion of the Project for the purposes for which it was intended. "Substantial Completion" of an operating facility shall be that degree of completion that has provided a minimum of 7 continuous days of successful, trouble-free, operation, which period shall begin after all performance and acceptance testing has been successfully demonstrated to the ENGINEER. All equipment contained in the work, plus all other components necessary to enable the OWNER to operate the facility in a manner that was intended, shall be complete on the substantial completion date.

17. WORK

The word "work" within these Contract Documents shall include all material, labor, tools, and all appliances, machinery, transportation, and appurtenances necessary to perform and complete the Contract, and such additional items not specifically indicated or described which can be reasonably inferred as belonging to the item described or indicated and as required by good practice to provide a complete and satisfactory system or structure. As used herein, "provide" shall be understood to mean "furnish and install, complete in-place ".

<u>CONTRACT DOCUMENTS</u>

18. INTENT OF CONTRACT DOCUMENTS

The Contract Documents are complementary, and what is called for by one shall be as binding as if called for by all. The intent of the Documents is to describe a functionally complete Project (or part thereof) to be constructed in accordance with the Contract Documents. Any work, materials, or equipment that may reasonably be inferred from the Contract Documents as being required to produce the intended result shall be supplied whether or not specifically called for. When words which have a well-known technical or trade meaning are used to describe work, materials, or equipment, such words shall be interpreted in accordance with that meaning.

Reference to standard specifications, manuals, or codes of any technical society, organization or association, or to the laws or regulations of any governmental authority, whether such reference be specific or by implication, shall mean the latest standard specification, manual, code or laws or regulations in effect on the first published date of the Invitation to Bid, except as may be otherwise specifically stated. However, no provision of any referenced standard specification, manual or code (whether or not specifically incorporated by reference in the Contract Documents) shall be effective to change the duties and responsibilities of OWNER, CONTRACTOR, or ENGINEER, or any of their consultants, agents, or employees from those set forth in the Contract Documents, nor shall it be effective to assign to ENGINEER, or any ENGINEER's consultants, agents, or employees, any duty or authority to supervise or direct the furnishing or performance of the work or any duty or authority to undertake responsibility contrary to the provisions of Article LIMITATIONS ON ENGINEER'S RESPONSIBILITIES.

19. DISCREPANCIES AND OMISSIONS

Any discrepancies or omissions found in the Contract Documents shall be reported to the ENGINEER immediately. The ENGINEER will clarify discrepancies or omissions, in writing, within a reasonable time.

In resolving inconsistencies among two or more sections of the Contract Documents, precedence shall be given in the following order:

A. CONTRACT
B. BID
C. SUPPLEMENTARY CONDITIONS
D. INVITATION TO BID
E. INSTRUCTIONS TO BIDDERS

F. GENERAL CONDITIONS
G. SPECIFICATIONS
H. DRAWINGS

Addenda shall take precedence over all sections referenced therein. Figure dimensions on Drawings shall take precedence over scale dimensions. Detailed Drawings shall take precedence over general Drawings.

20. CHANGES IN THE WORK

The OWNER, without notice to the Sureties and without invalidating the Contract, may order changes in the work within the general scope of the Contract by altering, adding to, or deducting from the work, the Contract being adjusted accordingly. All such work shall be executed under the conditions of the original Contract, except as specifically adjusted at the time of ordering such change.

In giving instructions, the ENGINEER may order minor changes in the work not involving extra cost and not inconsistent with the purposes of the Project, but otherwise, except in an emergency endangering life and property, additions or deductions from the work shall be performed only in pursuance of an approved Change Order from the OWNER, countersigned by the ENGINEER.

If the work is reduced by alterations, such action shall not constitute a claim for damages based on loss of anticipated profits.

21. EXAMINATION AND VERIFICATION OF CONTRACT DOCUMENTS

The CONTRACTOR shall thoroughly examine and become familiar with all of the various parts of these Contract Documents and determine the nature and location of the work, the general and local conditions, and all other matters, which can in any way affect the work under this Contract. Failure to make an examination necessary for this determination shall not release the CONTRACTOR from the obligations of this Contract. No verbal agreement or conversation with any officer, agent, or employee of the OWNER or with the ENGINEER either before or after the execution of this Contract shall affect or modify any of the terms or obligations herein contained.

22. DOCUMENTS TO BE KEPT ON THE JOBSITE

The CONTRACTOR shall keep one copy of the Contract Documents on the job- site, in good order, available to the ENGINEER and to his representatives.

The CONTRACTOR shall maintain on a daily basis at the jobsite, and make available to the ENGINEER on request, one current record set of the Drawings which have been accurately marked to indicate all modifications in the completed work that differ from the design information shown on the Drawings. Upon Substantial completion of the work, the CONTRACTOR shall give the ENGINEER one complete set of these marked up record Drawings.

23. ADDITIONAL CONTRACT DOCUMENTS

Copies of Contract Documents or Drawings may be obtained on request from the ENGINEER and by paying the actual cost of reproducing the Contract Documents or Drawings.

24. OWNERSHIP OF CONTRACT DOCUMENTS

All portions of the Contract Documents, and copies thereof furnished by the ENGINEER are instruments of service for this Project. They are not to be used on other work and are to be returned to the ENGINEER on request at the completion of the work. Any reuse of these materials without specific written verification or adaptation by the ENGINEER will be at the risk of the user and without liability or legal expense to the ENGINEER. Such user shall hold the ENGINEER harmless from any and all damages, including reasonable attorneys' fees, from any and all claims arising from any such reuse. Any such verification and adaptation shall entitle the ENGINEER to further compensation at rates to be agreed upon by the user and the ENGINEER.

<u>THE ENGINEER</u>

25. AUTHORITY OF THE ENGINEER

The ENGINEER will be the OWNER's representative during the construction period. His authority and responsibility will be limited to the provisions set forth in these Contract Documents. The ENGINEER will have the Authority to reject work that does not conform to the Contract Documents. However, neither the ENGINEER's authority to act under this provision, nor any decision made by him in good faith either to exercise or not to exercise such authority, shall give rise to any duty or responsibility of the ENGINEER to the CONTRACTOR, any SUBCONTRACTOR, their

respective Sureties, any of their agents or employees, or any other person performing any of the work.

26. DUTIES AND RESPONSIBILITIES OF THE ENGINEER

The ENGINEER will make visits to the site at intervals appropriate to the various stages of construction to observe the progress and quality of the work and to determine, in general, if the work is proceeding in accordance with the intent of the Contract Documents. He will not make comprehensive or continuous review or observation to check quality or quantity of the work, and he will not be responsible for construction means, methods, techniques, sequences, or procedures, or for safety precautions and programs in connection with the work. Visits and observations made by the ENGINEER shall not relieve the CONTRACTOR of his obligation to conduct comprehensive inspections of the work and to furnish materials and perform acceptable work, and to provide adequate safety precautions, in conformance with the intent of the Contract.

The ENGINEER will make recommendations to the OWNER, in writing, on all claims of the OWNER or the CONTRACTOR arising from interpretation or execution of the Contract Documents. Such recommendations will be of factual and/or technical nature, and will not include the legal interpretation of the Contract Documents. Any necessary legal interpretation of the Contract Document will be made by the OWNER. Such recommendation shall be necessary before the CONTRACTOR can receive additional money under the terms of the Contract. Changes in work ordered by the ENGINEER shall be made in compliance with Article CHANGES IN THE WORK.

One or more project representatives may be assigned to observe the work. It is understood that such project representatives shall have the authority to issue notice of nonconformance and make decisions within the limitations of the authority of the ENGINEER. The CONTRACTOR shall furnish all reasonable assistance required by the ENGINEER or project representatives for proper observation of the work. The above-mentioned project representatives shall not relieve the CONTRACTOR of his obligations to conduct comprehensive inspections of the work and to furnish materials and perform acceptable work, and to provide adequate safety precautions, in conformance with the intent of the Contract.

27. LIMITATIONS ON ENGINEER'S RESPONSIBILITIES

ENGINEER will not be responsible for CONTRACTOR's means, methods, techniques, sequences, or procedures of construction, or the safety precautions and programs incident thereto, and ENGINEER will not be responsible for CONTRACTOR's failure to perform or furnish the work in accordance with the Contract Documents.

ENGINEER will not be responsible for the acts or omissions of CONTRACTOR or of any SUBCONTRACTOR, any supplier, or of any other person or organization performing or furnishing any of the work.

Whenever in the Contract Documents the terms "as ordered", "as directed", "as required", "as allowed", "as approved", or terms of like effect or import are used, or the adjectives "reasonable", "suitable", "acceptable", "proper", or "satisfactory", or adjectives of like effect or import are used to describe a requirement, direction, review or judgment of ENGINEER as to the work, it is intended that such requirement, direction, review or judgment will be solely to evaluate the work for compliance with the Contract Documents (unless there is a specific statement indicating otherwise). The use of any such term or adjective shall not be effective to assign to ENGINEER any duty or authority to supervise or direct the furnishing or performance of the work or any duty or authority to undertake responsibility contrary to the provisions of this Article.

28. REJECTED WORK

Any defective work or nonconforming materials or equipment that may be discovered at any time prior to expiration of the warranty period shall be removed and replaced by work which shall conform to the provisions of the Contract Documents. Any material condemned or rejected shall be removed at once from the project site.

Failure on the part of the ENGINEER to condemn or reject bad or inferior work or to note nonconforming materials or equipment on CONTRACTOR submittals shall not be construed to imply acceptance of such work. The OWNER shall reserve and retain all of its rights and remedies at law against the CONTRACTOR and its Surety for correction of any and all latent defects discovered after the guarantee period.

29. LINES AND GRADES

Lines and grades shall be established as provided in the supplementary conditions. All stakes, marks, and other

reference information shall be carefully preserved by the CONTRACTOR, and in case of their careless or unnecessary destruction or removal by him or his employees, such stakes, marks, and other information shall be replaced at the CONTRACTOR's expense.

30. SUBMITTALS

After checking and verifying all field measurements and after complying with applicable procedures specified in Division I, GENERAL REQUIREMENTS, CONTRACTOR shall submit to ENGINEER, in accordance with the schedule for submittals for review, shop drawings, electrical diagrams, and catalog cuts for fabricated items and manufactured items (including mechanical and electrical equipment), which shall bear a stamp or specific written indication that CONTRACTOR has satisfied CONTRACTOR's responsibilities under the Contract Documents with respect to the review of the submittal. All submittals shall be identified as ENGINEER may require. The data shown shall be complete with respect to quantities, dimensions specified, performance and design criteria, materials, and similar data to enable ENGINEER to review the information. CONTRACTOR shall also submit to ENGINEER for review, with such promptness as to cause no delay in work, all samples required by the Contract Documents. All samples shall have been checked by and accompanied by a specific written indication that CONTRACTOR has satisfied CONTRACTOR's responsibilities under the Contract Documents with respect to the review of the submission and shall be identified clearly as to material, supplier, pertinent data such as catalog numbers and the use for which intended.

Before submission of each submittal, CONTRACTOR shall have determined and verified all quantities, dimensions, specified performance criteria, installation requirements, materials, catalog numbers, and similar data with respect thereto and reviewed or coordinated each submittal with other submittals and with the requirements of the work and the Contract Documents.

At the time of each submission, CONTRACTOR shall give ENGINEER specific written notice of each variation that the submittal may have from the requirements of the Contract Documents, and, in addition, shall cause a specific notation to be made on each shop drawing submitted to ENGINEER for review and approval of each variation.

ENGINEER will review submittals with reasonable promptness, but ENGINEER's review will be only for conformance with the design concept of the Project and for compliance with the information given in the Contract Documents and shall not extend to means, methods, techniques, sequences, or procedures of construction (except where a specific means, method, technique, sequence, or procedure of construction is indicated in or required by the Contract Documents) or to safety precautions or programs incident thereto. The review of a separate item as such will not indicate review of the assembly in which the item functions. CONTRACTOR shall make corrections required by ENGINEER, and shall return the required number of corrected copies of shop drawings and submit as required new samples for review. CONTRACTOR shall direct specific attention in writing to revisions other than the corrections called for by ENGINEER on previous submittals.

ENGINEER's review of submittals shall not relieve CONTRACTOR from the responsibility for any variation from the requirements of the Contract Documents unless CONTRACTOR has in writing called ENGINEER's attention to each such variation at the time of submission and ENGINEER has given written approval of each such variation by a specific written notation thereof incorporated therein or accompanying the shop drawing or sample approval; nor will any approval by ENGINEER relieve CONTRACTOR from responsibility for errors or omissions in the shop drawings or from responsibility for having complied with the provisions herein.

Where a shop drawing or sample is required by the specifications, any related work performed prior to ENGINEER's review and approval of the pertinent submission shall be at the sole expense and responsibility of the CONTRACTOR.

31. DETAIL DRAWINGS AND INSTRUCTIONS

The ENGINEER will furnish, with reasonable promptness, additional instructions by means of Drawings or otherwise, if, in the ENGINEER's opinion, such are required for the proper execution of the work. All such Drawings and instructions will be consistent with the Contract Documents, true developments thereof, and reasonably inferable there from.

<u>THE CONTRACTOR AND HIS EMPLOYEES</u>

32. CONTRACTOR, AN INDEPENDENT AGENT

The CONTRACTOR shall independently perform all

work under this Contract and shall not be considered as an agent of the OWNER or of the ENGINEER, nor shall the CONTRACTOR's SUBCONTRACTOR's or employees be subagents of the OWNER or of the ENGINEER.

33. SUBCONTRACTING

Unless modified in the Supplementary Conditions, within 10 days after the execution of the Contract, the CONTRACTOR shall submit to the ENGINEER the names of all SUBCONTRACTORS proposed for the work, including the names of any SUBCONTRACTORS that were submitted with the Bid. The CONTRACTOR shall not employ any SUBCONTRACTORS to which the OWNER may object to as lacking capability to properly perform work of the type and scope anticipated.

The CONTRACTOR is as fully responsible to the OWNER for the acts and omissions of his SUBCONTRACTORS and of persons either directly or indirectly employed by them as he is for the acts and omissions of persons directly employed by him.

Nothing contained in the Contract Documents shall create any contractual relationship between any SUBCONTRACTOR and the OWNER or ENGINEER.

34. INSURANCE AND LIABILITY

A. GENERAL

The CONTRACTOR shall provide (from insurance companies acceptable to the OWNER) the insurance coverage designated hereinafter and pay all costs.

Before commencing work under this Contract, the CONTRACTOR shall furnish the OWNER with certificates of insurance specified herein showing the type, amount class of operations covered, effective dates, and date of expiration of policies, and containing substantially the following statement:

"The insurance covered by this certificate shall not be canceled or materially altered, except after 30 days' written notice has been received by the OWNER."

In case of the breach of any provision of this Article, the OWNER, at his option, may take out and maintain, at the expense of the CONTRACTOR, such insurance as the OWNER may deem proper and may deduct the cost of such insurance from any monies which may be due or become due the CONTRACTOR under this Contract.

B. CONTRACTOR AND SUBCONTRACTOR INSURANCE

The CONTRACTOR shall not commence work under this Contract until he has obtained all the insurance required hereunder and such insurance has been reviewed by the OWNER, nor shall the CONTRACTOR allow any SUBCONTRACTOR to commence work on his subcontract until insurance specified below has been obtained. Review of the insurance by the OWNER shall not relieve or decrease the liability of the CONTRACTOR hereunder.

C. COMPENSATION AND EMPLOYER'S LIABILITY INSURANCE

The CONTRACTOR shall maintain during the life of this Contract the statutory amount of Workmen's Compensation Insurance, in addition, Employer's Liability Insurance in an amount as specified in the Supplementary Conditions, for each occurrence, for all of his employees to be engaged in work on the project under this Contract. In case any such work is subcontracted, the Contractor shall require the Subcontractor to provide similar Worker's Compensation and Employer's Liability Insurance for all of the Subcontractor's employees to be engaged in such work.

D. GENERAL LIABILITY INSURANCE (INCLUDING AUTOMOBILE)

The CONTRACTOR shall maintain during the life of this Contract such general liability, completed operations and products liability, and automobile liability insurance as will provide coverage for claims for damages for personal injury, including accidental death, as well as for claims for property damage, which may arise directly or indirectly from performance of the work under this Contract. The general liability policy shall include contractual liability assumed by the CONTRACTOR under Article **INDEMNITY.** Coverage for property damage shall be on a "broad form" basis with no exclusions for "X, C & U". The amount of insurance to be provided shall be as specified in the Supplementary Conditions.

In the event any work under this Contract is performed by a SUBCONTRACTOR, the CONTRACTOR shall be responsible for any liability directly or indirectly arising out of the work performed by the SUBCONTRACTOR, to the extent such liability is not covered by the SUBCONTRACTOR's insurance.

The OWNER and ENGINEER, their officers, agents, and employees shall be named as Additional Insured's on the CONTRACTOR's and any SUBCONTRACTOR's general liability and automobile liability insurance policies for any claims arising out of work performed under this Contract.

E. BUILDERS RISK ALL RISK INSURANCE

Unless otherwise modified in the Supplementary Conditions, the CONTRACTOR shall secure and maintain during the life of this Contract, Builders Risk All Risk Insurance coverage in an amount equal to the full value of the facilities/ work performed under this Contract/ construction. Such insurance shall include coverage for earthquake, landslide, flood, collapse, loss due to the results of faulty workmanship or design, and all other normally covered risks, and shall provide for losses to be paid to the CONTRACTOR, OWNER, and ENGINEER as their interests may appear.

The OWNER and ENGINEER, their officers, agents, and employees shall be named as additional insured's on the CONTRACTOR's and any SUBCONTRACTOR's Builders Risk All Risk insurance policies for any claims arising out of work performed under this Contract.

This insurance shall include a waiver of subrogation as to the ENGINEER, the OWNER, the CONTRACTOR, and their respective officers, agents, employees and SUBCONTRACTORS.

F. NO PERSONAL LIABILITY OF PUBLIC OFFICIALS

In carrying out any of the provisions hereof in exercising any authority granted by the Contract, there will be no personal liability upon any public official.

35. INDEMNITY

To the maximum extent permitted by law, the Contractor shall indemnify and defend the Owner and the Engineer, and their officers, employees, agents, and sub-consultants, from all claims and losses, including attorney's fees and litigation costs arising out of property losses or health, safety, personal injury, or death claims by the Contractor, its subcontractors of any tier, and their employees, agents, or invitees regardless of the fault, breach of Contract, or negligence of the Owner or Engineer, excepting only such claims or losses that have been adjudicated to have been caused solely by the negligence of the Owner or the Engineer and regardless of whether or not the Contractor is or can be named a party in a litigation.

36. EXCLUSION OF CONTRACTOR CLAIMS

In performing its obligations, the ENGINEER and its consultants may cause expense for the CONTRACTOR or its SUBCONTRACTORs and equipment or material suppliers. However, those parties and their sureties shall maintain no direct action against the ENGINEER, its officers, employees, agents, and consultants for any claim arising out of, in connection with, or resulting from the engineering services performed or required to be performed.

37. TAXES AND CHARGES

The CONTRACTOR shall withhold and pay any and all sales and use taxes and all withholding taxes, whether State or Federal, and pay all Social Security charges and also all State Unemployment Compensation charges, and pay or cause to be withheld, as the case may be, any and all taxes, charges, or fees or sums whatsoever, which are now or may hereafter be required to be paid or withheld under any laws.

38. REQUIREMENTS OF STATE LAW FOR PUBLIC WORKS PROJECTS

When the Contract Documents concern public works of the state or any county, municipality, or political subdivision created by its laws, the applicable statutes shall apply. All parties to this Contract shall determine the contents of all applicable statutes and comply with their provisions throughout the performance of the Contract.

39. CODES, ORDINANCES, PERMITS AND LICENSES

The CONTRACTOR shall keep himself fully informed of all local codes and ordinances, as well as state and federal laws, which in any manner affect the work herein specified. The CONTRACTOR shall at all times comply with said codes and ordinances, laws, and regulations, and protect and indemnify the OWNER, the ENGINEER and their respective employees, and its officers and agents against any claim or liability arising from or based on the violation of any such laws, ordinances, or regulations. All permits, licenses and inspection fees necessary for prosecution and completion of the work shall be secured and paid for by the CONTRACTOR, unless otherwise specified.

40. SUPERINTENDENCE

The CONTRACTOR shall keep at the project site, competent supervisory personnel. The CONTRACTOR shall designate, in writing, before starting work, a project superintendent who shall be an employee of the CONTRACTOR and shall have complete authority to represent and to act for the CONTRACTOR. ENGINEER shall be notified in writing prior to any change in superintendent assignment. The CONTRACTOR shall give efficient supervision to the work, using his best skill and attention. The CONTRACTOR shall be solely responsible for all construction means, methods, techniques, and procedures, and for providing adequate safety precautions and coordinating all portions of the work under the Contract. It is specifically understood and agreed that the ENGINEER, its employees and agents, shall not have control or charge of and shall not be responsible for the construction means, methods, techniques, procedures, or for providing adequate safety precautions in connection with the work under Contract.

41. RECEPTION OF ENGINEER'S COMMUNICATIONS

The superintendent shall receive for the CONTRACTOR all communications from the ENGINEER. Communications of major importance will be confirmed in writing upon request from the CONTRACTOR.

The ENGINEER may schedule project meetings for the purposes of discussing and resolving matters concerning the various elements of the work. Time and place for these meetings and the names of persons required to be present shall be as determined by the ENGINEER. CONTRACTOR shall comply with these attendance requirements and shall also require his SUBCONTRACTORS to comply.

42. SAFETY

The CONTRACTOR shall be solely and completely responsible for conditions of the jobsite, including safety of all persons (including employees) and property during performance of the work. This requirement shall apply continuously and not be limited to normal working hours. Safety provisions shall conform to U.S. Department of Labor (OSHA), and all other applicable federal, state, county, and local laws, ordinances, codes, and regulations. Where any of these are in conflict, the more stringent requirement shall be followed. The CONTRACTOR's failure to thoroughly familiarize himself with the aforementioned safety provisions shall not relieve him from compliance with the obligations and penalties set forth therein.

The CONTRACTOR shall develop and maintain for the duration of this Contract, a safety program that will effectively incorporate and implement all required safety provisions. The CONTRACTOR shall appoint an employee who is qualified and authorized to supervise and enforce compliance with the safety program.

The duty of the ENGINEER to conduct construction review of the work does not include review or approval of the adequacy of the CONTRACTOR's safety program, safety supervisor, or any safety measures taken in, on, or near the construction site.

The CONTRACTOR, as a part of his safety program, shall maintain at his office or other well-known place at the jobsite, safety equipment applicable to the work as prescribed by the aforementioned authorities, all articles necessary for giving first-aid to the injured, and shall establish the procedure for the immediate removal to a hospital or a doctor's care of persons (including employees) who may be injured on the jobsite.

If death or serious injuries or serious damages are caused, the accident shall be reported immediately by telephone or messenger to both the ENGINEER and the OWNER. In addition, the CONTRACTOR must promptly report in writing to the ENGINEER all accidents whatsoever arising out of, or in connection with, the performance of the work whether on, or adjacent to, the site, giving full details and statements of witnesses.

If a claim is made by anyone against the CONTRACTOR or any SUBCONTRACTOR on account of any accident, the CONTRACTOR shall promptly report the facts in writing to the ENGINEER, giving full details of the claim.

43. PROTECTION OF WORK AND PROPERTY

The CONTRACTOR shall at all times safely guard and protect from damage the OWNER's property, adjacent property, and his own work from injury or loss in connection with this Contract. All facilities required for protection by federal, state, or municipal laws and regulations and local conditions must be provided and maintained.

The CONTRACTOR shall protect his work and materials from damage due to the nature of the work, the

elements, carelessness of other CONTRACTORS, or from any cause whatever until the completion and acceptance of the work. All loss or damages arising out of the nature of the work to be done under these Contract Documents, or from any unforeseen obstruction or defects which may be encountered in the prosecution of the work, or from the action of the elements, shall be sustained by the CONTRACTOR.

44. RESPONSIBILITY OF CONTRACTOR TO ACT IN AN EMERGENCY

In case of an emergency which threatens loss or injury of property, and/or safety of life, the CONTRACTOR shall act, without previous instructions from the OWNER or ENGINEER, as the situation may warrant. The CONTRACTOR shall notify the ENGINEER thereof immediately thereafter. Any claim for compensation by the CONTRACTOR, together with substantiating documents in regard to expense, shall be submitted to the OWNER through the ENGINEER and the amount of compensation shall be determined by agreement.

45. MATERIALS AND APPLIANCES

Unless otherwise stipulated, the CONTRACTOR shall provide and pay for all materials, labor, water, tools, equipment, heat, light, fuel, power, transportation, construction equipment and machinery, appliances, telephone, sanitary facilities, temporary facilities and other facilities and incidentals necessary for the execution and completion of the work.

Unless otherwise specified, all materials shall be new, and both workmanship and materials shall be of good quality. The CONTRACTOR shall, if required, furnish satisfactory evidence as to the kind and quality of materials.

In selecting and/or approving equipment for installation in the Project, the OWNER and ENGINEER assume no responsibility for injury or claims resulting from failure of the equipment to comply with applicable federal, state, and local safety codes or requirements, or the safety requirements of a recognized agency, or failure due to faulty design concepts, or defective workmanship and materials.

46. CONTRACTORS' AND MANUFACTURERS' COMPLIANCE WITH STATE SAFETY, OSHA, AND OTHER CODE REQUIREMENTS

The completed work shall include all necessary permanent safety devices, such as machinery guards and similar ordinary safety items required by the state and federal (OSHA) industrial authorities and applicable local and national codes. Further, any features of the work subject to such safety regulations shall be fabricated, furnished, and installed (including OWNER-furnished equipment) in compliance with these requirements. CONTRACTORS and manufacturers of equipment shall be held responsible for compliance with the requirements included herein. CONTRACTORS shall notify all equipment suppliers and SUBCONTRACTORS of the provisions of this Article.

47. SUBSTITUTION OF MATERIALS

Except for OWNER-selected equipment items, and items where no substitution is clearly specified, whenever any material, article, device, product, fixture, form, type of construction, or process is indicated or specified by patent or proprietary name, by name of manufacturer, or by catalog number, such specifications shall be deemed to be used for the purpose of establishing a standard of quality and facilitating the description of the material or process desired. This procedure is not to be construed as eliminating from competition other products of equal or better quality by other manufacturers where fully suitable in design, and shall be deemed to be followed by the words "or equal". The CONTRACTOR may, in such cases, submit complete data to the ENGINEER for consideration of another material, type, or process that shall be substantially equal in every respect to that so indicated or specified. Substitute materials shall not be used unless approved in writing. The ENGINEER will be the sole judge of the substituted article or material.

48. TESTS, SAMPLES, AND OBSERVATIONS

The CONTRACTOR shall furnish, without extra charge, the necessary test pieces and samples, including facilities and labor for obtaining the same, as requested by the ENGINEER. When required, the CONTRACTOR shall furnish certificates of tests of materials and equipment made at the point of manufacture by a recognized testing laboratory.

The OWNER, ENGINEER, and authorized government agents, and their representatives shall at all times be provided safe access to the work wherever it is in

preparation or progress, and the CONTRACTOR shall provide facilities for such access and for observations, including maintenance of temporary and permanent access.

If the Specifications, laws, ordinances, or any public authority require any work, to be specially tested or approved, the CONTRACTOR shall give timely notice of its readiness for observations. If any work should be covered up without approval or consent of the ENGINEER, it shall, if required by the ENGINEER, be uncovered for examination at the CONTRACTOR's expense.

Reexamination of questioned work may be ordered by the ENGINEER, and, if so ordered, the work shall be uncovered by the CONTRACTOR. If such work is found to be in accordance with the Contract Documents, the OWNER will pay the cost of uncovering, exposure, observation, inspection, testing and reconstruction. If such work is found to be not in accordance with the Contract Documents, the CONTRACTOR shall correct the defective work, and the cost of reexamination and correction of the defective work shall be paid by the CONTRACTOR.

49. ROYALTIES AND PATENTS

The CONTRACTOR shall pay all royalty and licenses fees, unless otherwise specified. The CONTRACTOR shall defend all suits or claims for infringement of any patent rights and shall save the OWNER and the ENGINEER harmless from any and all loss, including reasonable attorneys' fees, on account thereof.

50. CONTRACTOR'S RIGHT TO TERMINATE CONTRACT

If the work should be stopped under an order of any court or other public authority for a period of more than 3 months, through no act or fault of the CONTRACTOR, its SUBCONTRACTORS, or respective employees or if the ENGINEER should fail to make recommendation for payment to the OWNER or return payment request to CONTRACTOR for revision within 30 days after it is due, or if the OWNER should fail to pay the CONTRACTOR within 30 days after time specified in Article PARTIAL PAYMENTS, any sum recommended by the ENGINEER, then the CONTRACTOR may, upon 15 days' written notice to the OWNER and the ENGINEER, stop work or terminate this Contract and recover from the OWNER payment for all acceptable work performed and reasonable termination expenses, unless said default has been remedied.

51. CORRECTION OF DEFECTIVE WORK DURING WARRANTY PERIOD

The CONTRACTOR hereby agrees to make, at his own expense, all repairs or replacements necessitated by defects in materials or workmanship, provided under terms of this Contract, and pay for any damage to other works resulting from such defects, which become evident within 2 years after the date of final acceptance of the work or within 2 years after the date of substantial completion established by the ENGINEER for specified items of equipment, or within such longer period as may be prescribed by law or by the terms of any applicable special guarantee required by the Contract Documents. Un-remedied defects identified for correction during the warranty period but remaining after its expiration shall be considered as part of the obligations of the warranty. Defects in material, workmanship, or equipment which are remedied as a result of obligations of the warranty shall subject the remedied portion of the work to an extended warranty period of 2 years after the defect has been remedied.

The CONTRACTOR further assumes responsibility for a similar guarantee for all work and materials provided by SUBCONTRACTORS or manufacturers of packaged equipment components. The effective date for the start of the guarantee or warranty period for equipment qualifying as substantially complete is defined in Article SUBSTANTIAL COMPLETION, AND Article SUBSTANTIAL COMPLETION DATE, in these General Conditions.

The CONTRACTOR also agrees to hold the OWNER and the ENGINEER harmless from liability of any kind arising from damage due to said defects. The CONTRACTOR shall make all repairs and replacements promptly upon receipt of written order for same from the OWNER. If the CONTRACTOR fails to make the repairs and replacements promptly, or in an emergency where delay would cause serious risk, or loss, or damage, the OWNER may have the defective work corrected or the rejected work removed and replaced, and the CONTRACTOR and his Surety shall be liable for the cost thereof.

PROGRESS OF THE WORK

52. BEGINNING OF THE WORK

Following execution of the Contract, the CONTRACTOR shall meet with the OWNER and ENGINEER relative to his arrangements for prosecuting the work.

53. SCHEDULES AND PROGRESS REPORTS

Prior to starting the construction, the CONTRACTOR shall prepare and submit to the ENGINEER, a progress schedule showing the dates on which each part or division of the work is expected to be started and finished, and a preliminary schedule for submittals. The progress schedule for submittals shall be brought up to date and submitted to the ENGINEER at the end of each month or at such other times the ENGINEER may request.

The CONTRACTOR shall forward to the ENGINEER, at the end of each month, an itemized report of the delivery status of major and critical items of purchased equipment and material, including shop drawings and the status of shop and field fabricated work. These progress reports shall indicate the date of the purchase order, the current percentage of completion, estimated delivery, and cause of delay, if any.

If the completion of any part of the work or the delivery of materials is behind the submitted progress schedule, the CONTRACTOR shall submit in writing a plan acceptable to the OWNER and ENGINEER for bringing the work up to schedule.

The OWNER shall have the right to withhold progress payments for the work if the CONTRACTOR fails to update and submit the progress schedule and reports as specified.

54. PROSECUTION OF THE WORK

It is expressly understood and agreed that the time of beginning, rate of progress, and time of completion of the work are the essence of this Contract. The work shall be prosecuted at such time, and in or on such part or parts of the Project as may be required, to complete the Project as contemplated in the Contract Documents and the progress schedule.

If the CONTRACTOR desires to carry on work at night or outside the regular hours, he shall give timely notice to the ENGINEER to allow satisfactory arrangements to be made for observing the work in progress.

55. OWNER'S RIGHT TO RETAIN IMPERFECT WORK

If any part or portion of the work completed under this Contract shall prove defective and not in accordance with the Drawings and Specifications, and if the imperfection in the same shall not be of sufficient magnitude or importance as to make the work dangerous or unsuitable, or if the removal of such work will create conditions which are dangerous or undesirable, the OWNER shall have the right and authority to retain such work but will make such deductions in the final payment therefore as may be just and reasonable.

56. OWNER'S RIGHT TO DO WORK

Should the CONTRACTOR neglect to prosecute the work in conformance with the Contract Documents or neglect or refuse at his own cost to remove and replace work rejected by the ENGINEER, then the OWNER may notify the Surety of the condition, and after 10 days' written notice to the CONTRACTOR and the Surety, or without notice if an emergency or danger to the work or public exists, and without prejudice to any other right which the OWNER may have under Contract, or otherwise, take over that portion of the work which has been improperly or non-timely executed, and make good the deficiencies and deduct the cost thereof from the payments then or thereafter due the CONTRACTOR.

57. OWNER'S RIGHT TO TRANSFER EMPLOYMENT

If the CONTRACTOR should abandon the work or if he should persistently or repeatedly refuse or should fail to make prompt payment to SUBCONTRACTORS for material or labor, or to persistently disregard laws, ordinances, or to prosecute the work in conformance with the Contract Documents, or otherwise be guilty of a substantial violation of any provision of the Contract or any laws or ordinance, then the OWNER may, without prejudice to any other right or remedy, and after giving the CONTRACTOR and Surety 10 days' written notice, transfer the employment for said work from the CONTRACTOR to the Surety. Upon receipt of such notice, such Surety shall enter upon the premises and take possession of all materials, tools, and appliances thereon for the purpose of completing the work included under this Contract and employ by Contract or otherwise, any qualified person or persons to finish the work and provide the materials therefore, in accordance with the Contract Documents, without termination of the continuing full force and effect of this Contract. In case of such transfer of employment to such Surety, the Surety shall be paid in its own name on estimates according to the terms hereof without any right of the CONTRACTOR to make any claim for the same or any part thereof.

If, after the furnishing of said written notice to the Surety, the CONTRACTOR and the Surety still fail to

make reasonable progress on the performance of the work, the OWNER may terminate the employment of the CONTRACTOR and take possession of the premises and of all materials, tools, and appliances thereon and finish the work by whatever method he may deem expedient and charge the cost thereof to the CONTRACTOR and the Surety. In such case, the CONTRACTOR shall not be entitled to receive any further payment until the work is finished. If the expense of completing the Contract, including compensation for additional managerial and administrative services, shall exceed such unpaid balance, the CONTRACTOR and the Surety shall pay the difference to the OWNER.

58. DELAYS AND EXTENSION OF TIME

If the CONTRACTOR is delayed in the progress of the work by any act or neglect of the OWNER or the ENGINEER, or by any separate CONTRACTOR employed by the OWNER, or by strikes, lockouts, fire, adverse weather conditions not reasonably anticipated, or acts of Nature, and if the CONTRACTOR, within 48 hours of the start of the occurrence, gives written notice to the OWNER of the cause of the potential delay and estimate of the possible time extension involved, and within 10 days after the cause of the delay has been remedied, the CONTRACTOR gives written notice to the OWNER of any actual time extension requested as a result of the aforementioned occurrence, then the Contract time may be extended by change order for such reasonable time as the ENGINEER determines. It is agreed that no claim shall be made or allowed for any damages, loss, or expense which may arise out of any delay caused by the above referenced acts or occurrences other than claims for the appropriate extension of time.

No extension of time will be granted to the CONTRACTOR for delays occurring to parts of the work that have no measurable impact on the completion of the total work under this Contract. No extension of time will be considered for weather conditions reasonably anticipated for the area in which the work is being performed. Reasonably anticipated weather conditions will be based on official records of monthly precipitation and other historical data. Adverse weather conditions, if determined to be of a severity that would impact progress of the work, may be considered as cause for an extension of Contract completion time.

Delays in delivery of equipment or material purchased by the CONTRACTOR or his SUBCONTRACTORS, including OWNER-selected equipment shall not be considered as a just cause for delay, unless the OWNER determines that for good cause the delay is beyond the control of the CONTRACTOR. The CONTRACTOR shall be fully responsible for the timely ordering, scheduling, expediting, delivery, and installation of all equipment and materials.

Within a reasonable period after the Contractor submits to the Owner a written request for an extension of time, the Engineer will present his written opinion to the Owner as to whether an extension of time is justified, and, if so, his recommendation as to the number of days for time extension. The Owner will make the final decision on all requests for extension of time.

59. DIFFERING SITE CONDITIONS

The CONTRACTOR shall promptly, and before the conditions are disturbed, give a written notice to the OWNER and ENGINEER of:

A. Subsurface or latent physical conditions at the site which differ materially from those indicated in this contract,

B. Unknown physical conditions at the site, of an unusual nature, which differ materially from those ordinarily encountered and generally recognized as inherent in work of the character provided for in the Contract.

The ENGINEER will investigate the site conditions promptly after receiving the notice. If the conditions do materially so differ and cause an increase or decrease in the CONTRACTOR's cost of, or the time required for, performing any part of the work under this Contract, whether or not changed as a result of the conditions, and equitable adjustment shall be made under this Article and the Contract modified in writing accordingly.

No request by the CONTRACTOR for an equitable adjustment to the Contract under this Article will be allowed, unless the CONTRACTOR has given the written notice required; provided that the time prescribed above for giving written notice may be extended by the OWNER.

No request by the CONTRACTOR for an equitable adjustment to the Contract for differing site conditions will be allowed if made after final payment under this Contract.

60. LIQUIDATED DAMAGES

Should the CONTRACTOR fail to complete the work, or any part thereof, in the time agreed upon in the Contract or within such extra time as may have been allowed for

delays by extensions granted as provided in the Contract, the CONTRACTOR shall reimburse the OWNER for the additional expense and damage for each calendar day, Sundays and legal holidays included, that the Contract remains uncompleted after the Contract completion date. It is agreed that the amount of such additional expense and damage incurred by reason of failure to complete the work is the per-diem rate, as stipulated in the Bid. The said amount is hereby agreed upon as a reasonable estimate of the costs which may be accrued by the OWNER after the expiration of the time of completion. It is expressly under- stood and agreed that this amount is not to be considered in the nature of a penalty, but as liquidated damages which have accrued against the CONTRACTOR. The OWNER shall have the right to deduct such damages from any amount due, or that may become due the CONTRACTOR, or the amount of such damages shall be due and collectible from the CONTRACTOR or Surety.

61. OTHER CONTRACTS

The OWNER reserves the right to let other Contracts in connection with the work. The CONTRACTOR shall afford other CONTRACTORS reasonable opportunity for the introduction and storage of their materials and the execution of their work and shall properly connect and coordinate his work with theirs.

If any part of the work under this Contract depends for proper execution or results upon the work of any other CONTRACTOR, utility service company or OWNER, the CONTRACTOR shall inspect and promptly report to the ENGINEER in writing any patent or apparent defects to deficiencies in such work that render it unsuitable for such proper execution and results. The CONTRACTOR's failure to so report shall constitute and acceptance of the work by others as being fit and proper for integration with work under this Contract, except for latent or non-apparent defects and deficiencies in the work.

62. USE OF PREMISES

The CONTRACTOR shall confine his equipment, the storage of materials and the operation of his workers to limits shown on the Drawings or indicated by law, ordinances, permits, or directions of the ENGINEER, and shall not unreasonably encumber the premises with his materials. The CONTRACTOR shall provide, at his own expense, the necessary rights-of-way and access to the work, which may be required outside the limits of the OWNER's property and shall furnish the ENGINEER copies of permits and agreements for use of the property outside that provided by the OWNER.

The CONTRACTOR shall not load nor permit any part of the structure to be loaded in any manner that will endanger the structure, nor shall CONTRACTOR subject any part of the work or adjacent property to stresses or pressures that will endanger it.

63. SUBSTANTIAL COMPLETION DATE

The ENGINEER may issue a written notice of substantial completion for the purpose of establishing the starting date for specific equipment guarantees, and to establish the date that the OWNER will assume the responsibility for the cost of operating such equipment. Said notice shall not be considered as final acceptance of any portion of the work or relieve the CONTRACTOR from completing the remaining work within the specified time and in full compliance with the Contract Documents. See SUBSTANTIAL COMPLETION under DEFINITIONS of these General Conditions.

64. PERFORMANCE TESTING

Operating equipment and systems shall be performance tested in the presence of the ENGINEER to demonstrate compliance with the specified requirements. Performance testing shall be conducted under the specified design operating conditions or under such simulated operating conditions as recommended or approved by the ENGINEER. Schedule such testing with the ENGINEER at least one week in advance of the planned date for testing.

65. OWNER'S USE OF PORTIONS OF THE WORK

Following issuance of the written notice of Substantial Completion, the OWNER may initiate operation of the facility. Such use shall not be considered as final acceptance of any portion of the work, nor shall such use be considered as cause for an extension of the Contract completion time, unless authorized by a Change Order issued by the OWNER.

66. CUTTING AND PATCHING

The CONTRACTOR shall do all cutting, fitting, or patching of his work that may be required to make its several parts come together properly and fit it to receive or be received by work of other CONTRACTORS shown upon or reasonably implied by the Drawings.

67. CLEANING UP

The CONTRACTOR shall, at all times, keep property on which work is in progress and the adjacent property free from accumulations of waste material or rubbish caused by employees or by the work. Upon completion of the construction, the CONTRACTOR shall remove all temporary structures, rubbish, and waste materials resulting from his operations.

PAYMENT

68. PAYMENT FOR CHANGE ORDERS

The OWNER's request for quotations on alterations to the work shall not be considered authorization to proceed with the work prior to the issuance of a formal Change Order, nor shall such a request justify any delay in existing work. Quotations for alterations to the work shall include substantiating documentation with an itemized breakdown of CONTRACTOR and SUBCONTRACTOR costs, including labor, material, rentals, approved services, overhead, and profit. OWNER may require detailed cost data in order to substantiate the reasonableness of the proposed costs.

Any compensation paid in conjunction with the terms of a Change Order shall comprise total compensation due the CONTRACTOR for the work or alteration defined in the Change Order. By signing the Change Order, the CONTRACTOR acknowledges that the stipulated compensation includes payment for the work or alteration plus all payment for the interruption of schedules, extended overhead, delay, or any other impact claim or ripple effect, and by such signing specifically waives any reservation or claim for additional compensation in respect to the subject Change Order.

At the OWNER's option, payment or credit for any alterations covered by a Change Order shall be determined by one or a combination of the methods set forth in A, B, or C below, as applicable:

A. UNIT PRICES

Those unit prices stipulated in the Bid shall be utilized where they are applicable. In the event the Change Order results in a change in the original quantity that is materially and significantly different from the original bid quantity, a new unit price shall be negotiated upon demand of either party. Unit prices for new items included in the Change Order shall be negotiated and mutually agreed upon.

B. LUMP SUM

A total lump sum for the work negotiated and mutually acceptable to the CONTRACTOR and the OWNER.

Lump sum quotations for modifications to the work shall include substantiating documentation with an itemized breakdown of CONTRACTOR and SUBCONTRACTOR costs, including labor, material, rentals, approved services, overhead, and profit, all calculated as specified under "C" below.

C. COST REIMBURSEMENT WORK

The term "cost reimbursement" shall be understood to mean that payment for the work will be made on a time and expense basis, that is, on an accounting of the CONTRACTOR's forces, materials, equipment, and other items of cost as required and used to do the work.

If the method of payment cannot be agreed upon prior to the beginning of the work, and the OWNER directs by written Change Order that the work be done on a cost reimbursement basis, then the CONTRACTOR shall furnish labor, and furnish and install equipment and materials necessary to complete the work in a satisfactory manner and within a reasonable period of time. For the work performed, payment will be made for the documented actual cost of the following:

1. Labor including foremen for those hours they are assigned and participating in the cost reimbursement work (actual payroll cost, including wages, fringe benefits as established by negotiated labor agreements, labor insurance, and labor taxes as established by law). No other fixed labor burdens will be considered, unless approved in writing by the OWNER.
2. Material delivered and used on the designated work, including sales tax, if paid by the CONTRACTOR or his SUBCONTRACTOR.
3. Rental or equivalent rental cost of equipment, including necessary transportation for items having a value in excess of $100.

   Rental or equivalent rental cost will be allowed for only those days or hours during which the equipment is in actual use. Rental and transportation allowances shall not exceed the current rental rates prevailing in the locality. The rentals allowed for equipment will, in all cases, be understood to cover all fuel, supplies, repairs, and renewals, and no further allowances

will be made for those items, unless specific agreement to that effect is made.

4. Additional bond, as required and approved by the OWNER.
5. Additional insurance (other than labor insurance) as required and approved by the OWNER.

In addition to items 1 through 5 above, an added fixed fee for general overhead and profit shall be negotiated and allowed for the CONTRACTOR (or approved SUBCONTRACTOR) actually executing the Cost Reimbursement work.

An additional fixed fee shall be negotiated and allowed the CONTRACTOR for the administrative handling of portions of the work that are executed by an approved SUBCONTRACTOR. No additional fixed fee will be allowed for the administrative handling of work executed by a SUBCONTRACTOR of a SUBCONTRACTOR, unless by written permission from the OWNER.

The added fixed fees shall be considered to be full compensation, covering the cost of general supervision, overhead, profit, and any other general expense. The CONTRACTOR's records shall make clear distinction between the direct costs of work paid for on a cost reimbursement basis and the costs of other work. The CONTRACTOR shall furnish the ENGINEER report sheets in duplicate of each day's cost reimbursement work no later than the working day following the performance of said work. The daily report sheets shall itemize the materials used, and shall cover the direct cost of labor and the charges for equipment rental, whether furnished by the CONTRACTOR, SUBCONTRACTOR or other forces. The daily report sheets shall provide names or identifications and classifications of workers, the hourly rate of pay and hours worked, and also the size, type, and identification number of equipment and hours operated.

Material charges shall be substantiated by valid copies of vendors' invoices. Such invoices shall be submitted with the daily report sheets, or, if not available, they shall be submitted with subsequent daily report sheets. Said daily report sheets shall be signed by the CONTRACTOR or his authorized agent.

The OWNER reserves the right to furnish such materials and equipment as he deems expedient and the CONTRACTOR shall have no claim for profit or added fees on the cost of such materials and equipment. To receive partial payments and final payment for cost reimbursement work, the CONTRACTOR shall submit to the ENGINEER, detailed and complete documented verification of the CONTRACTOR's and any of his SUBCONTRACTORS' actual costs involved in the cost reimbursement work. Such costs shall be submitted within 30 days after said work has been performed.

69. PARTIAL PAYMENTS

A. GENERAL

Nothing in this Article shall be construed to affect the right, hereby reserved, to reject the whole or any part of the aforesaid work, should such work be later found not to comply with the provisions of the Contract Documents. All estimated quantities of work for which partial payments have been made are subject to review and correction on the final estimate. Payment by the OWNER and acceptance by the CONTRACTOR of partial payments based on periodic estimates of quantities of work performed shall not, in any way, constitute acceptance of the estimated quantities used as a basis for computing the amounts of the partial payments.

B. ESTIMATE

At least 30 days before each progress payment falls due, as specified in the Supplementary Conditions, the CONTRACTOR shall submit to the ENGINEER a detailed estimate of the amount earned during the preceding month for the separate portions of the work, and request payment. As used in this Article, the words "amount earned" means the value, on the date of the estimate for partial payment, of the work completed in accordance with the Contract Documents, and the value of approved materials delivered to the project site suitable stored and protected prior to incorporation into the work.

ENGINEER will, within 7 days after receipt of each request for payment, either indicate in writing a recommendation of payment and present the request to OWNER, or return the request to CONTRACTOR indicating in writing ENGINEER's reasons for refusing to recommend payment. In the latter case, CONTRACTOR may, within 7 days, make the necessary corrections and resubmit the request.

ENGINEER may refuse to recommend the whole or any part of any payment if, in his opinion, it would be incorrect to make such representations to OWNER. ENGINEER may also refuse to recommend any such payment, or, because of subsequently discovered evidence or the results of subsequent inspections or tests,

nullify any such payment previously recommended to such an extent as may be necessary in ENGINEER's opinion to protect the OWNER from loss because:

1. The work is defective, or completed work has been damaged requiring correction or replacement;

2. Written claims have been made against OWNER or Liens have been filed in connection with the work;

3. The Contract Price has been reduced because of Change Orders;

4. OWNER has been required to correct defective work or complete the work in accordance with Article OWNER'S RIGHT TO DO WORK;

5. Of CONTRACTOR's unsatisfactory prosecution of the work in accordance with the Contract Documents; or

6. CONTRACTOR's failure to make payment to SUBCONTRACTORS or for labor, materials, or equipment.

C. DEDUCTION FROM ESTIMATE

Unless modified in the Supplementary Conditions, deductions from the estimate will be as described below:

1. The OWNER will deduct from the estimate, and retain as part security, 10 percent of the amount earned for work satisfactorily completed. A deduction and retainage of 10 percent will be made on the estimated amount earned for approved items of material delivered to and properly stored at the jobsite but not incorporated into the work. When the work is 50 percent complete, the OWNER may reduce the retainage to 5 percent of the dollar value of all work satisfactorily completed to date provided the CONTRACTOR is making satisfactory progress and there is no specific cause for a greater retainage. The OWNER may reinstate the retainage up to 10 percent if the OWNER determines, at his discretion, that the CONTRACTOR is not making satisfactory progress or where there is other specific cause for such withholding.

D. QUALIFICATION FOR PARTIAL PAYMENT FOR MATERIALS DELIVERED

Unless modified in the Supplementary Conditions, qualification for partial payment for materials delivered but not yet incorporated into the work shall be as described below:

1. Materials, as used herein, shall be considered to be those items which are fabricated and manufactured material and equipment. No consideration shall be given to individual purchases of less than $200 for any one item.

2. To receive partial payment for materials delivered to the site, but not incorporated in the work, it shall be necessary for the CONTRACTOR to include a list of such materials on the Partial Payment Request. At his sole discretion, the ENGINEER may approve items for which partial payment is to be made. Partial payment shall be based on the CONTRACTOR's actual cost for the materials as evidenced by invoices from the supplier. Proper storage and protection shall be provided by the CONTRACTOR, and as approved by the ENGINEER. Final payment shall be made only for materials actually incorporated in the work and, upon acceptance of the work, all materials remaining for which advance payments had been made shall revert to the CONTRACTOR, unless otherwise agreed, and partial payments made for these items shall be deducted from the final payment for the work.

3. CONTRACTOR warrants and guarantees that title to all work, materials, and equipment covered by any Application for Payment, whether incorporated in the Project or not, will pass to OWNER at the time of payment free and clear of all liens, claims, security interests, and encumbrances.

4. If requested by the ENGINEER, the CONTRACTOR shall provide, with subsequent pay requests, invoices receipted by the supplier showing payment in full has been made.

E. PAYMENT

After deducting the retainage and the amount of all previous partial payments made to the CONTRACTOR from the amount earned, the amount due will be made payable to the CONTRACTOR. Recommendations for payment received by the OWNER less than 9 days prior to the scheduled day for payment will not be processed or paid until the following month.

70. CLAIMS FOR EXTRA WORK

In any case where the CONTRACTOR deems additional time or compensation will become due him under this Contract for circumstances other than those defined in Article DELAYS AND EXTENSION OF TIME, the CONTRACTOR shall notify the ENGINEER, in writing, of his intention to make claim for such time or compensation before he begins the work on which he bases the claim, in order that such matters may be settled, if possible, or other appropriate action taken. The notice of claim shall be in duplicate, in writing, and shall state the circumstances and the reasons for the claim, but need not state the amount. If such notification is not given or if the ENGINEER is not afforded proper facilities by the CONTRACTOR for keeping strict account of actual cost, then the CONTRACTOR hereby agrees to waive the claim for such additional time or compensation. Such notice by the CONTRACTOR, and fact that the ENGINEER has kept account of the cost as aforesaid, shall not in any way be construed as proving the validity of the claim.

No extension of time will be granted to the CONTRACTOR for delays resulting from extra work that have no measurable impact on the completion of the total Work under this Contract. Claims for additional time or compensation shall be made in itemized detail and submitted, in writing, to the OWNER and ENGINEER within 10 days following completion of that portion of the work for which the CONTRACTOR bases his claim. Failure to make the claim for additional compensation in the manner and within the time specified above shall constitute waiver of that claim. In case the claim is found to be just, it shall be allowed and paid for as provided in Article PAYMENT FOR CHANGE ORDERS.

71. RELEASE OF LIENS OR CLAIMS

The CONTRACTOR shall indemnify and hold harmless the OWNER from all claims for labor and materials furnished under this Contract. Prior to the final payment, the CONTRACTOR shall furnish to the OWNER, as part of his final payment request, a certification that all of the CONTRACTOR's obligations on the Project have been satisfied and that all monetary claims and indebtedness have been paid. The CONTRACTOR shall furnish complete and legal effective releases or waivers, satisfactory to the OWNER, of all liens arising out of or filed in connection with the work.

72. FINAL PAYMENT

Upon completion of all the work under this Contract, the CONTRACTOR shall notify the ENGINEER, in writing, that he has completed his part of the Contract and shall request final payment. Upon receipt of such notice the ENGINEER will inspect and, if acceptable, submit to the OWNER his recommendation as to acceptance of the completed work and as to the final estimate of the amount due the CONTRACTOR. Upon approval of this final estimate by the OWNER and compliance by the CONTRACTOR with provisions in Article RELEASE OF LIENS OR CLAIMS, and other provisions as may be applicable, the OWNER shall pay to the CONTRACTOR all monies due him under the provisions of these Contract Documents.

73. NO WAIVER OF RIGHTS

Neither the inspection by the OWNER, through the ENGINEER or any of his employees, nor any order by the OWNER for payment of money, nor any payment for, or acceptance of, the whole or any part of the work by the OWNER or ENGINEER, nor any extension of time, nor any possession taken by the OWNER or its employees, shall operate as a waiver of any provision of this Contract, or any power herein reserved to the OWNER, or any right to damages herein provided, nor shall any waiver of any breach in this Contract be held to be a waiver of any other or subsequent breach. Acceptance or final payment shall not be final and conclusive with regards to latent defects, fraud, or such gross mistakes as may amount to fraud, or as regards the OWNER's rights under the warranty.

74. ACCEPTANCE OF FINAL PAYMENT CONSTITUTES RELEASE

The acceptance by the CONTRACTOR of the final payment shall release the OWNER and the ENGINEER, as representatives of the OWNER, from all claims and all liability to the CONTRACTOR for all things done or furnished in connection with the work, and every act of the OWNER and others relating to or arising out of the work except claims previously made in writing and still unsettled. No payment, however, final or otherwise, shall operate to release the CONTRACTOR or his Sureties from obligations under this Contract and the Performance Bond, Payment Bond, and other bonds and warranties, as herein provided.

SUPPLEMENTARY CONDITIONS

The General Conditions are hereby revised as follows:

ARTICLE 9 "ENGINEER"

Add the following:

Wherever in these Documents the word "Engineer" appears, it shall be understood to mean the City of Key West, Deputy Director, Port & Marine Services or authorized representatives.

ARTICLE 12 "OWNER"

Add the following:

Wherever in these Documents the word "Owner" appears, it shall be understood to mean the City of Key West whose address is 1300 White Street, Key West, Florida 33040.

ARTICLE 32 "CONTRACTOR, AN INDEPENDENT AGENT"

Add the following:

Assignment of any part or the whole of this Contract shall be subject to review and approval of the City Commission.

ARTICLE 34 “INSURANCE AND LIABILITY”

Delete Article 34 Sections A, B, C and D and replace with the following:

CONTRACTOR is to secure, pay for, and file with the City of Key West, prior to commencing any work under the Contract, all certificates for workers’ compensation, public liability, and property damage liability insurance, and such other insurance coverages as may be required by specifications and addenda thereto, in at least the following minimum amounts with specification amounts to prevail if greater than minimum amounts indicated. Notwithstanding any other provision of the Contract, the CONTRACTOR shall provide the minimum limits of liability insurance coverage as follows:

Type of Insurance	Limits	Comments
Commercial General Liability	$1,000,000	The proposers may have these coverages combined in 1 policy
Watercraft Liability	$1,000,000	
Business Automobile Liability	$1,000,000	
Workers’ Compensation	Statutory	
Employers Liability	$1,000,000/$1,000,000/$1,000,000	

USL&H and Jones Act Coverage	$1,000,000	

CONTRACTOR shall furnish an original Certificate of Insurance indicating, and such policy providing coverage to, City of Key West named as an additional insured on a PRIMARY and NON CONTRIBUTORY basis utilizing an ISO standard endorsement at least as broad as CG 2010 (11/85) or its equivalent, (combination of CG 20 10 07 04 and CG 20 37 07 04, providing coverage for completed operations, is acceptable) including a waiver of subrogation clause in favor of City of Key West on all policies. CONTRACTOR will maintain the General Liability and Umbrella Liability insurance coverages summarized above with coverage continuing in full force including the additional insured endorsement until at least 3 years beyond completion and delivery of the work contracted herein.

Notwithstanding any other provision of the Contract, the CONTRACTOR shall maintain complete workers' compensation coverage for each and every employee, principal, officer, representative, or agent of the CONTRACTOR who is performing any labor, services, or material under the Contract. Further, CONTRACTOR shall additionally maintain the following minimum limits of coverage:

Bodily Injury Each Accident	$1,000,000
Bodily Injury by Disease Each Employee	$1,000,000
Bodily Injury by Disease Policy Limit	$1,000,000

The City of Key West confirms that the scope of services specified in the Contract requires work on or near a navigable waterway. Water description: City of Key West Mooring Field. Therefore the CONTRACTOR's workers' compensation policy shall be endorsed to provide the following:

- Workers Compensation/Employer Liability
  USL&H Coverage (Longshore and Harbor Workers' Compensation Act) Endorsement WC 000106A
  Jones Act Coverage* Endorsement WC 000201A

Note: Jones Act (Crew) coverage may be provided under the P&I policy, if Contractor is using an OWNED vessel during the course of the work.

CONTRACTOR shall provide the City of Key West with a Certificate of Insurance verifying compliance with the workman's compensation coverage as set forth herein and shall provide as often as required by the City of Key West such certification which shall also show the insurance company, policy number, effective and expiration date, and the limits of workman's compensation coverage under each policy.

CONTRACTOR's insurance policies shall be endorsed to give 30 days written notice to the City of Key West in the event of cancellation or material change, using form CG 02 24, or its equivalent.

Certificates of Insurance submitted to the City of Key West will not be accepted without copies of the endorsements being requested. This includes additional insured endorsements, cancellation/material change notice endorsements, and waivers of subrogation. Copies of

USL&H Act and Jones Act endorsements will also be required if necessary. PLEASE ADVISE YOUR INSURANCE AGENT ACCORDINGLY.

CONTRACTOR will comply with any and all safety regulations required by any agency or regulatory body including but not limited to OSHA. CONTRACTOR will notify City of Key West immediately by telephone at (305) 809-3811 any accident or injury to anyone that occurs on the jobsite and is related to any of the work being performed by the CONTRACTOR.

Add the following Section:

G. SURETY AND INSURER QUALIFICATIONS

All bonds, insurance contracts, and certificates of insurance shall be either executed by or countersigned by a licensed resident agent of the Surety or insurance company, having his place of business in the State of Florida, and in all ways complying with the insurance laws of the State of Florida. Further, the said Surety or insurance company shall be duly licensed and qualified to do business in the State of Florida.

ARTICLE 35 "INDEMNITY"

Delete Article 35 in its entirety and replace with the following:

INDEMNITY

To the fullest extent permitted by law, the CONTRACTOR expressly agrees to indemnify and hold harmless the City of Key West, their officers, directors, agents and employees (herein called the "indemnitees") from liabilities, damages, losses and costs, including but not limited to, reasonable attorney's fees and court costs, such legal expenses to include costs incurred in establishing the indemnification and other rights agreed to in this Paragraph, to persons or property, to the extent caused by the negligence, recklessness, or intentional wrongful misconduct of the CONTRACTOR, its Subcontractors or persons employed or utilized by them in the performance of the Contract. Claims by indemnitees for indemnification shall be limited to the amount of CONTRACTOR's insurance or $1 million per occurrence, whichever is greater. The parties acknowledge that the amount of the indemnity required hereunder bears a reasonable commercial relationship to the Contract and it is part of the project specifications or the bid documents, if any.

The indemnification obligations under the Contract shall not be restricted in any way by any limitation on the amount or type of damages, compensation, or benefits payable by or for the CONTRACTOR under Workers' Compensation acts, disability benefits acts, or other employee benefits acts, and shall extend to and include any actions brought by or in the name of any employee of the CONTRACTOR or of any third party to whom CONTRACTOR may subcontract a part or all of the Work. This indemnification shall continue beyond the date of completion of the work.

ARTICLE 39 "CODES, ORDINANCES, PERMITS, AND LICENSES"

Add the following:

A. NOISE ORDINANCE

City of Key West has a noise ordinance that allows working hours between 8:00 AM to 7:00 PM, Monday through Friday. No work should be performed during weekends or City Holidays, State Holidays and National Holidays. Any construction operations outside these hours and these days will require a variance from the City of Key West Commission.

B. "LICENSES"

Within 10 days of Notice of Award, the successful Bidder must represent that he holds all applicable state, county, and City of Key West licenses and permits required to do business as a contractor with respect to the work described in the Contract Documents.

Further, the successful Bidder must, within 10 days of Notice of Award, furnish documentation showing that, as a minimum, he has complied with the provisions of Chapter 18 of the Code of Ordinances of the City of Key West in order to enter into the Agreement contained in the Contract Documents.

Specifically, within 10 days after Notice of Award, the successful Bidder must demonstrate that he holds, as a minimum, the following licenses and certificates:

1. City of Key West, Engineering Contractor Class I license.
2. Holds a valid occupational license issued by the City of Key West.

ARTICLE 42 "SAFETY"

Add the following sub article:

OCCUPATIONAL SAFETY AND HEALTH

The Contractor shall observe and comply with all applicable local, state, and federal occupational safety and health regulations during the prosecution of work under this Contract. In addition, full compliance by the Contractor with the U.S. Department of Labor's Occupational Safety and Health Standards, as established in Public Law 91-596, will be required under the terms of this Contract.

ARTICLE 43 "PROTECTION OF WORK AND PROPERTY"

Add the following Article:

HISTORIC PRESERVATION

The Contractor shall comply with Florida's Archives and Historic Act (Florida Statutes, Chapter 267) and the regulations of the local historic preservation board as applicable and protect against the potential loss or destruction of significant historical or archaeological data, sites, and properties in connection with the project.

ARTICLE 45 "MATERIALS AND APPLIANCES"

Add the following to the end of the first paragraph:

At contract completion, no equipment purchased by the contractor shall be transferred to state or local ownership.

ARTICLE 57 “OWNERS RIGHT TO TRANSFER EMPLOYMENT”

Add the following Article:

TERMINATION FOR CONVENIENCE AND RIGHT OF SUSPENSION

A. Owner shall have the right to terminate this Contract without cause by written notice of Termination to the Contractor. In the event of such termination for convenience, the Contractor’s recovery against the Owner shall be limited to that portion of the Contract amount earned through the date of termination, together with any retainage withheld and reasonable termination expenses incurred. Contractor shall not be entitled to any other or further recovery against the Owner, including, but not limited to, damages or any anticipated profit on portions of the Work not performed.

B. Owner shall have the right to suspend all or any portions of the Work upon giving the Contractor prior written notice of such suspension. If all or any portion of the Work is so suspended, the Contractor shall be entitled to reasonable costs, expenses and time extension associated with the suspension.

ARTICLE 60 "LIQUIDATED DAMAGES"

Delete Article "LIQUIDATED DAMAGES" in its entirety and substitute the following:

LIQUIDATED DAMAGES

Should the Contractor fail to complete the work or any part thereof in the time agreed upon in the Contract Documents or within such extra time as may have been allowed for delays by extensions granted as provided in the Contract, the Contractor shall reimburse the Owner for the additional expense and damage for each calendar day, Sundays and legal holidays included, that project outlined in Contract Documents remains uncompleted after the completion date. Liquidated damages shall be assessed. It is agreed that the amount of such additional expense and damage incurred by reason of failure to complete the work is the per diem rate as stipulated in the Proposal. The said amount is hereby agreed upon as a reasonable estimate of the costs which may be accrued by the Owner after the expiration of the time of completion. It is expressly understood and agreed that this amount is not to be considered in the nature of a penalty

but as liquidated damages, which have accrued against the Contractor. The Owner shall have the right to deduct such damages from any amount due or that may become due the Contractor or the amount of such damages shall be due and collectible from the Contractor or Surety.

ARTICLE 69 "PARTIAL PAYMENTS"

Delete the first paragraph of Article "PARTIAL PAYMENTS" and substitute the following:

No more than once each month the Contractor shall submit to the Engineer a detailed estimate of the amount earned during the preceding month for the separate portions of the work and request payment. As used in this Article the words "amount earned" means the value, on the date of the estimate, for partial payment of the work completed in accordance with the Contract Documents and the value of approved materials delivered to the project site suitably stored and protected prior to incorporation into the work

Add the following:

Payment will be made by the Owner to the Contractor within 40 days receipt of the written recommendation of payment from the Engineer.

Delete Sub-Article C "DEDUCTION FROM ESTIMATE" in its entirety and substitute the following:

DEDUCTION FROM ESTIMATE

The Owner will deduct from the estimate and retain as part security 10 percent of the amount earned for work satisfactorily completed. A deduction and retainage of 10 percent will be made on the estimated amount earned for approved items of material delivered to and properly stored at the jobsite but not incorporated into the work.

Delete Sub-Article E "PAYMENT" in its entirety and substitute the following:

PAYMENT

After deducting the retainage and the amount of all previous partial payments made to the Contractor from the amount earned the amount due will be made payable to the Contractor. Recommendations for payment received by the Owner less than 40 days prior to the scheduled day for payment will not be processed or paid until the following month.

ARTICLE 72 "FINAL PAYMENT”

Add the following;

A. Acceptance and Final Payment.

Whenever the Contractor has completely performed the work provided for under the Contract and the Engineer has performed a final inspection and made final acceptance

and subject to the terms of the Engineer will prepare a final estimate showing the value of the work as soon as the Engineer makes the necessary measurements and computations. The Engineer will correct all prior estimates and payments in the final estimate and payment. The OWNER will pay the estimate, less any sums that the OWNER may have deducted or retained under the provisions of the Contract, as soon as practicable after final acceptance of the work, provided the Contractor has met the requirements of (1) through (6) below.

1 The Contractor has agreed in writing to accept the balance due or refund the overpayment, as determined by the OWNER, as full settlement of his account under the Contract and of all claims in connection therewith, or the Contractor, accepted the balance due or refunded the overpayment, as determined by the OWNER, with the stipulation that his acceptance of such payment or the making of such refund does not constitute any bar, admission, or estoppel, or have any effect as to those payments in dispute or the subject of a pending claim between the Contractor and the OWNER. To receive payment based on a FINAL PAYMENT CERTIIFCATE, The Contractor further agrees, by submitting a FINAL PAYMENT CERTIFICATE that any pending or future arbitration claim or suit is limited to those particulars, including the itemized amounts, defined in the original FINAL PAYMENT CERTIFICATE , and that he will commence with any such arbitration claim or suit within 15 calendar days from and after the time of final PAYMENT of the work and that his failure to file a formal claim within this period constitutes his full acceptance of the Engineer's final estimate and payment. The overpayment refund check from the Contractor, if required, will be considered a part of any Acceptance Letter executed.

2 The Contractor has properly maintained the project, as specified hereinbefore.

3 The Contractor has furnished a sworn affidavit to the effect that the Contractor has paid all bills and no suits are pending (other than those exceptions listed, if any) in connection with work performed under the Contract and that the Contractor has not offered or made any gift or gratuity to, or made any financial transaction of any nature with, any employee of the OWNER in the performance of the Contract.

4 The surety on the contract bond consents, by completion of their portion of the affidavit and surety release subsequent to the Contractor's completion of his portion, to final payment to the Contractor and agrees that the making of such payment does not relieve the surety of any of its obligations under the bond.

5 The Contractor has furnished all required mill tests and analysis reports to the Engineer.

6 The Contractor has furnished as-built drawings in AutoCad and Adobe PDF, in accordance with all supplied data collections and files to be compatible with Esri ArcGIS 10.2.2 Software. The current computing environment consists of:

- Microsoft SQL Server

- Windows 7/Server 2008
- ESRI GIS Platform

Interfaces and Integrations

* * * *

PART 4

TECHNICAL SPECIFICATIONS

Scope

The work covered under this section shall consist of manufacturing and/or supplying of the prefabricated fixed piers, floating docks, pile guides, cleats, fendering, utility routing/anchorage system and other marine hardware and accessories as may be shown or enumerated on the plans. All materials shall be as manufactured by Gator Dock & Marine, LLC, Sanford, Florida, (407) 323-0190 or engineer approved equal.

General

The deck and frame structural components of the floating docks shall be designed with minimum safety factors on working stress which conform to those set forth in the latest issue of the Aluminum Association "SPECIFICATIONS FOR ALUMINUM STRUCTURES" for buildings and similar type structures. The installing contractor shall be a qualified Marine Contractor or General Contractor licensed by the appropriate governing agency and shall be capable of securing building or construction permits. The manufacturer/supplier shall have a minimum of 5 years continuous experience in commercial pier, dock or gangway fabrication and may be required to submit a list of previous experience on similar projects.

Technical

The following requirements are a minimum and must be met by each dock fabricator in accordance with the requirements of the section entitled GENERAL.

Materials

Frame

1.1.1. Aluminum extrusions for dock, pier, and gangway structures shall be aluminum alloy 6061-T6 "E" channels extruded in accordance with the requirements of applicable sections of Federal Specifications QQ-A-200. Miscellaneous aluminum may be 6063-T5 or 5052-H32.

Flotation

1.2.1. Flotation shall consist of expanded polystyrene foam with a nominal density of 1 lb/Cu.ft. Loose or exposed beads will not be accepted.

1.2.1.1. Polystyrene floats shall consist of seamless rotationally molded polyethylene casings with an integrated mounting flange minimum 1" thick. Polyethylene shell shall have a nominal wall thickness shall be 0.15". Casings shall contain ultraviolet light inhibitors. Individual flotation modules shall conform to the following requirements: ASTM D1238, D1505, D1693, D746, D648, D638, D790, C303, & C272.

Accessories

Decking

1.3.1.1. Existing IPE Decking

1.3.2. Cleats shall be cast aluminum alloy meeting the requirements of the Federal Specifications QQ-A-571F and QQ-A-601E.

1.3.3. All hardware shall be stainless steel type 304.

Fenders

1.3.4.1. Wood side fenders shall be Southern Pine No. 1 Structural (1200# extreme fiber bending) Stress Grade with a minimum CCA content equal to 0.40 pounds per cubic foot or equal. All wood shall comply with American Softwood Lumber Standard PS 20-70. Each piece of lumber shall be identified by the grade and treatment mark of recognized organization or independent agency certified by the American Lumber Standards Committee, Washington, DC to grade the species. All lumber specified for treatment shall be treated to the requirements of American Wood Preservers Bureau AWPB LP-22.

1.3.4.2. Vinyl bumpers shall be of non-marring marine grade extruded vinyl with minimum 3" vertical face. White vinyl bumper shall be non-yellowing.

Rollers

1.3.5. Rollers for either pile guides or gangways shall be UHMW polyethylene with black ultra-violet light inhibitor added.

Design

Frame

2.1. The structural frame design of floating docks, the aluminum frame and decking shall be designed to withstand the full calculated dead load of all framing & accessories combined with a live load of 50 pounds per square foot. Allowable deflection shall be L/180 where "L" in inches is the freespan between cross members for floating docks.

Flotation

2.2. All floating docks shall be designed for a minimum freeboard of 8 inches under full dead plus live load, and 10 inches under a dead load plus concentrated load of 400 pounds applied at any location on the dock walking surface. Additional flotation shall be added to support the gangway dead loads without

creating undue distortion in the dock.

2.2.1. Poly floats shall be designed for a minimum of 20psf live load providing a minimum of 16" unloaded freeboard.

Accessories

2.3.1. Cleats shall be designed to withstand a mooring line load of 1500 pounds in any direction.

2.3.2. Hinged or bolted floating dock module connectors shall be able to withstand a load of 3000 pounds applied to the full connector.

2.3.3. Anchoring devices for floating docks shall allow free movement of the dock, while minimizing damage due to normal dock movement caused by tides, boat wakes, water fluctuation and seasonal winds. Anchoring devices shall be of sufficient number to restrain a uniform lateral force of 150 pounds per linear foot applied along the entire length of the dock.

2.3.4. Utility lines shall meet all governing construction and fire codes. All electrical lines, junction boxes and accessories shall be installed with the strict adherence to the latest edition of the "National Electrical Code".

Fabrication

Frame

3.1.1. All aluminum structural members shall be welded in accordance with the American Welding Society Structural Welding Code D1.2.

3.1.2. Individual dock and pier sections shall be sequentially numbered, matched, and pre-drilled in the shop prior to shipment.

Flotation

3.2. Flotation: All flotation shall be fully installed in the shop. Selected floats may be removed to facilitate shipping.

3.2.1. Poly floats shall be through-bolted with a minimum of four bolts per float. Screws or lag-screws shall be prohibited.

Accessories

3.3.1. Existing IPE decking shall be spaced with not more than 3/8 inch air space between the slats. The decking slats shall be placed transversely on the pier or dock.

3.3.2. Cleats on aluminum decked docks shall be welded with a continuous fillet weld. All cleats shall be installed in locations shown on plans.

3.3.3. Aluminum utility tray shall be riveted to frame to match existing.

3.3.4. Where wood fendering is used the minimum size member shall be 2 x 8, secured at minimum spacing of 4' on center with 3/8" type 304 stainless steel bolts countersunk below the wearing surface of the exposed side.

3.3.5. Hinge mount extrusions shall be welded to the frame of the dock with a continuous fillet weld unless otherwise shown on the plans. Non-hinged dock module connectors shall be shown on the plans.

3.3.6. Anchoring devices, including pile guides, shall be bolted or welded to the piers and docks in locations and according to the details shown in the plans. Framing shall be braced at pile guides.

Installation

4.1. Docks and piers shall be anchored with pile guides or other anchoring devices bolted to the aluminum frame. Floating docks must move freely during the entire cycle of water level extremes with the normal expected wind condition. Utility lines must not be installed on top of the deck or in a location subject to damage during normal use and must be installed to function properly during normal expected water level and weather extremes.

4.2. Utility hangars and access panels shall be mounted and located as shown in plans.

4.3. Any potentially corrosive installation of dissimilar metals shall be properly insulated to minimize or eliminate corrosion in a marine environment.

PART 5

SUPPLEMENTAL INFORMATION

Florida Department of Environmental Protection

South District Branch Office
2796 Overseas Highway, Suite 221
Marathon, Florida 33050
SouthDistrict@floridadep.gov

Rick Scott
Governor

Carlos Lopez-Cantera
Lt. Governor

Noah Valenstein
Secretary

June 29, 2018

City of Key West
Karen Olson
210 William Street
Key West, Florida 33040
kOlson@CityOfKeyWest-FL.gov

File No.: 0116528-011-EE, Monroe County

Dear Applicant:

On June 26, 2018, we received your request for verification of exemption to perform the following activities:

> To repair an existing municipally-operated multi-slip docking facility at 1801 North Roosevelt Boulevard, Key West, Florida 33040, Parcel ID No. 0072070 0000000 in Garrison Bight, Class III Waters, Section 32, Township 67 South, Range 25 East, Monroe County.

Your request has been reviewed to determine whether it qualifies for (1) a regulatory exemption, (2) proprietary authorization (related to state-owned submerged lands), and (3) federal approval that may be necessary for work in wetlands or waters of the United States.

Your project did not qualify for the federal review portion of this verification request. Activities, other than the installation of a boat lift, located in Monroe County are not eligible for federal authorization under the State Programmatic General Permit. As of October 1, 2017, separate application must be made to the Army Corps of Engineers (Corps). **You must apply separately to the Corps using the appropriate federal application form.** More information about Corps permitting may be found online in the Jacksonville Regulatory Division Sourcebook. contact information found below). This letter does not relieve you from the responsibility of obtaining other federal, state, or local authorizations that may be required for the activity.

1. Regulatory Review – VERIFIED

Based on the information submitted, the Department has determined that the activity as proposed is exempt, under Section 373.406(6) of the Florida Statutes, from the need to obtain a regulatory permit under Part IV of Chapter 373 of the Florida Statutes. This determination is made because the activity, in consideration of its type, size, nature, location, use and operation, is expected to have only minimal or insignificant individual or cumulative adverse impacts on the water resources.

This exemption verification is based on the information you provided the Department and the statutes and rules in effect when the information was submitted. This verification may not be valid if site conditions materially change, the project design is modified, or the statutes or rules governing the exempt activity are amended. In the event you need to re-verify the exempt status for the activity, a new request and verification fee will be required. Any substantial modifications to the project design should be submitted to the Department for review, as changes may result in a permit being required.

2. Proprietary Review - NOT REQUIRED

The activity does not appear to be located on sovereign submerged lands, and does not require further authorization under Chapter 253 of the Florida Statutes, or Chapters 18-20 or 18-21 of the Florida Administrative Code.

3. SPGP Review - NOT APPROVED

Your proposed activity as outlined on your application and attached drawings **does not qualify** for Federal authorization pursuant to the State Programmatic General Permit and a **separate application is required** to the Corps. You must apply separately to the Corps using the federal application form (ENG 4345). More information about Corps permitting may be found online in the Jacksonville District Regulatory Division Sourcebook. Please contact the Corps at the Miami Office at 9900 SW 107th Avenue, Suite 203, Miami, FL 33176-2785, or by telephone at (305)-526-7181, or electronically at SEAPPLS@usace.army.mil for further information. **Failure to obtain Corps authorization prior to construction could subject you to federal enforcement action by that agency.**

Authority for review an agreement with the USACOE entitled "Coordination Agreement Between the U. S. Army Corps of Engineers (Jacksonville District) and the Florida Department of Environmental Protection, or Duly Authorized Designee, State Programmatic General Permit", Section 10 of the Rivers and Harbor Act of 1899, and Section 404 of the Clean Water Act.

Additional Information

Please retain this letter. The activities may be inspected by authorized state personnel in the future to ensure compliance with appropriate statutes and administrative codes. If the activities are not in compliance, you may be subject to penalties under Chapter 373, F.S., and Chapter 18-14, F.A.C.

NOTICE OF RIGHTS

This action is final and effective on the date filed with the Clerk of the Department unless a petition for an administrative hearing is timely filed under Sections 120.569 and 120.57, F.S., before the deadline for filing a petition. On the filing of a timely and sufficient petition, this action will not be final and effective until further order of the Department. Because the administrative hearing process is designed to formulate final agency action, the filing of a petition means that the Department's final action may be different from the position taken by it in this notice.

Petition for Administrative Hearing

A person whose substantial interests are affected by the Department's action may petition for an administrative proceeding (hearing) under Sections 120.569 and 120.57, F.S. Pursuant to Rule 28-106.201, F.A.C., a petition for an administrative hearing must contain the following information:

(a) The name and address of each agency affected and each agency's file or identification number, if known;
(b) The name, address, any email address, any facsimile number, and telephone number of the petitioner; the name, address, and telephone number of the petitioner's representative, if any, which shall be the address for service purposes during the course of the proceeding; and an explanation of how the petitioner's substantial interests are or will be affected by the agency determination;
(c) A statement of when and how the petitioner received notice of the agency decision;
(d) A statement of all disputed issues of material fact. If there are none, the petition must so indicate;
(e) A concise statement of the ultimate facts alleged, including the specific facts that the petitioner contends warrant reversal or modification of the agency's proposed action;
(f) A statement of the specific rules or statutes that the petitioner contends require reversal or modification of the agency's proposed action, including an explanation of how the alleged facts relate to the specific rules or statutes; and
(g) A statement of the relief sought by the petitioner, stating precisely the action that the petitioner wishes the agency to take with respect to the agency's proposed action.

The petition must be filed (received by the Clerk) in the Office of General Counsel of the Department at 3900 Commonwealth Boulevard, Mail Station 35, Tallahassee, Florida 32399-3000 or by email to Agency_clerk@dep.state.fl.us. Also, a copy of the petition shall be mailed to the applicant at the address indicated above at the time of filing.

Time Period for Filing a Petition

In accordance with Rule 62-110.106(3), F.A.C., petitions for an administrative hearing by the applicant must be filed within 21 days of receipt of this written notice. Petitions filed by any persons other than the applicant, and other than those entitled to written notice under Section 120.60(3), F.S. must be filed within 21 days of publication of the notice or within 21 days of receipt of the written notice, whichever occurs first. Under Section 120.60(3), F.S., however, any person who has asked the Department for notice of agency action may file a petition within 21 days of receipt of such notice, regardless of the date of publication. The failure to file a

petition within the appropriate time period shall constitute a waiver of that person's right to request an administrative determination (hearing) under Sections 120.569 and 120.57, F.S., or to intervene in this proceeding and participate as a party to it. Any subsequent intervention (in a proceeding initiated by another party) will be only at the discretion of the presiding officer upon the filing of a motion in compliance with Rule 28-106.205, F.A.C.

Extension of Time

Under Rule 62-110.106(4), F.A.C., a person whose substantial interests are affected by the Department's action may also request an extension of time to file a petition for an administrative hearing. The Department may, for good cause shown, grant the request for an extension of time. Requests for extension of time must be filed with the Office of General Counsel of the Department at 3900 Commonwealth Boulevard, Mail Station 35, Tallahassee, Florida 32399-3000, before the applicable deadline for filing a petition for an administrative hearing. A timely request for extension of time shall toll the running of the time period for filing a petition until the request is acted upon.

Mediation

Mediation is not available in this proceeding.

FLAWAC Review

The applicant, or any party within the meaning of Section 373.114(1)(a) or 373.4275, F.S., may also seek appellate review of this order before the Land and Water Adjudicatory Commission under Section 373.114(1) or 373.4275, F.S. Requests for review before the Land and Water Adjudicatory Commission must be filed with the Secretary of the Commission and served on the Department within 20 days from the date when the order is filed with the Clerk of the Department.

Judicial Review

Any party to this action has the right to seek judicial review pursuant to Section 120.68, F.S., by filing a Notice of Appeal pursuant to Rules 9.110 and 9.190, Florida Rules of Appellate Procedure, with the Clerk of the Department in the Office of General Counsel, 3900 Commonwealth Boulevard, M.S. 35, Tallahassee, Florida 32399-3000; and by filing a copy of the Notice of Appeal accompanied by the applicable filing fees with the appropriate District Court of Appeal. The Notice of Appeal must be filed within 30 days from the date this action is filed with the Clerk of the Department.

Thank you for applying to the Submerged Lands and Environmental Resource Permit Program. If you have any questions regarding this matter, please contact us by telephone at (239) 344-5600 or by e-mail at SouthDistrict@floridadep.gov. When referring to this project, please reference the file number listed above.

Executed in Orlando, Florida.

STATE OF FLORIDA DEPARTMENT OF ENVIRONMENTAL PROTECTION

Megan Mills
Permitting Program Administrator
South District

CERTIFICATE OF SERVICE

The undersigned duly designated deputy clerk hereby certifies that this document, including all copies, were sent to the addressee and to the following listed persons:

U.S. Army Corps of Engineers, Miami Office, SEAppls@usace.army.mil

FILING AND ACKNOWLEDGMENT

FILED, on this date, pursuant to Section 120.52(7), F.S., with the designated Department clerk, receipt of which is hereby acknowledged.

Clerk

June 29, 2018
Date

Enclosures:
5 Project drawings
373.406(6), F.S.

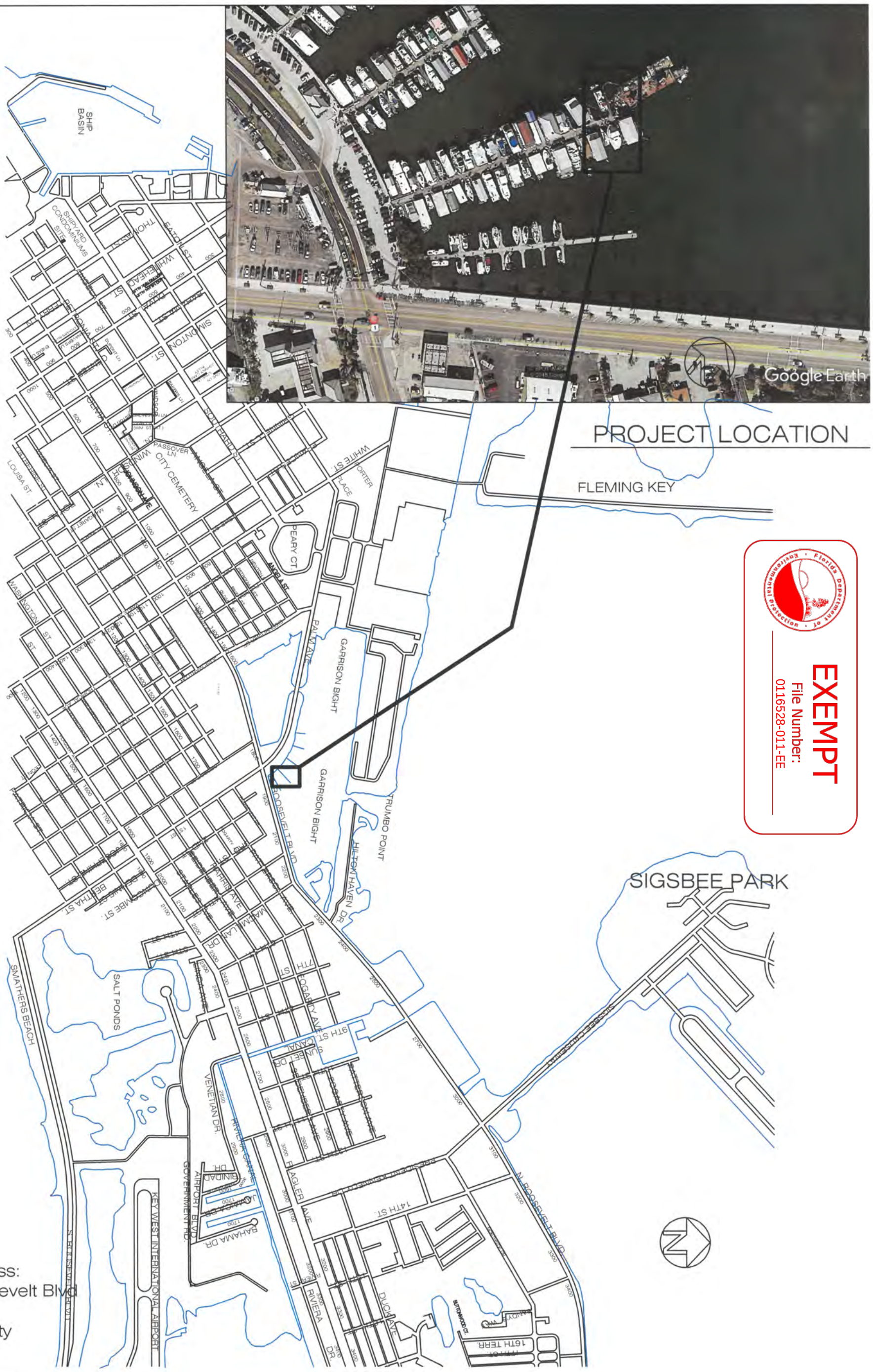

EXEMPT
File Number:
01165528-011-EE

Received Electronically
June 26, 2018
South District

Project Address:
1801 N. Roosevelt Blvd
Key West
Monroe County
Florida 33040

Project Location:
Latitude: N 24.560492
Longitude: W 81.783384
Project Area:
726 sq. ft.

City of Key West
PORT & MARINE SERVICES
201 William Street
Key West, FL 33040

HURRICANE IRMA REPAIRS
TARPON PIER
CITY MARINA @ GARRISON BIGHT

LOCATION MAP

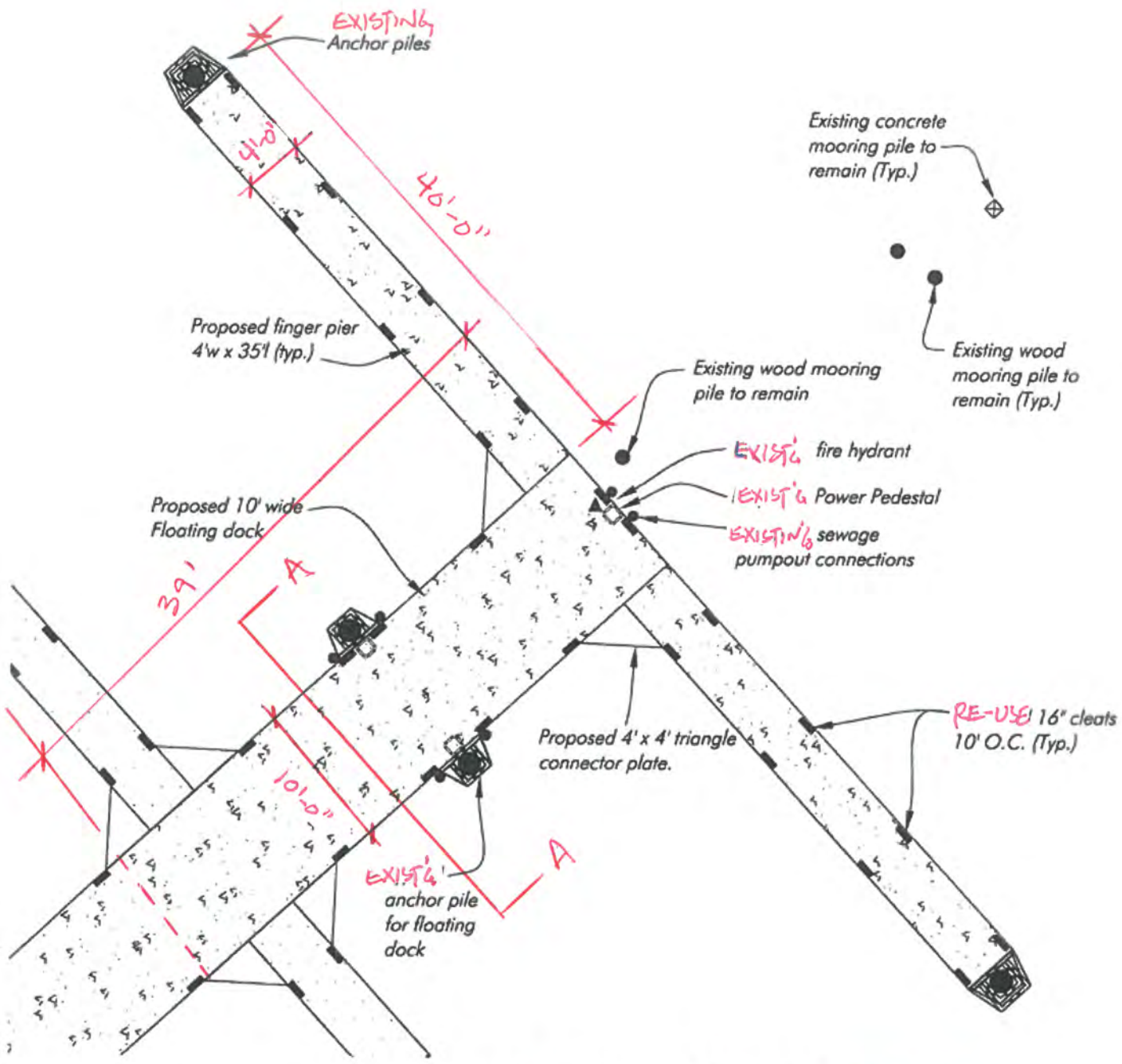

- Proposed Dock - REPAIR

SCALE: NTS

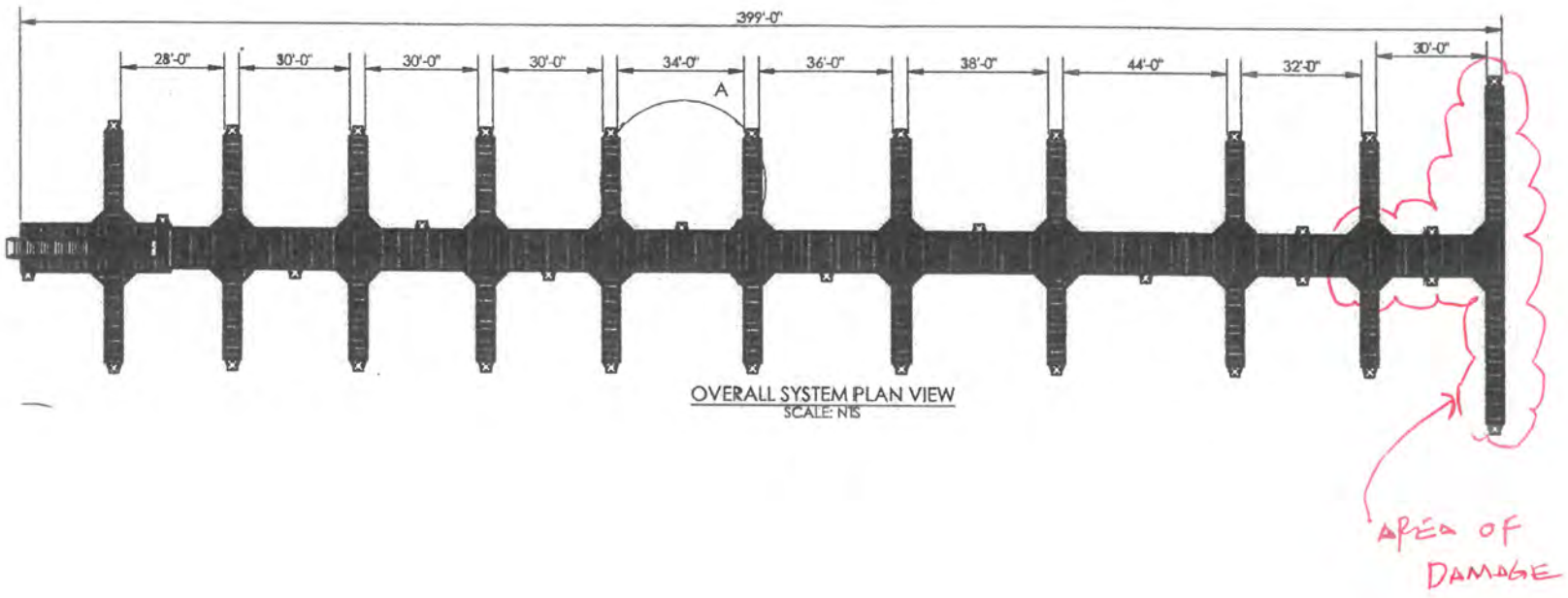

OVERALL SYSTEM PLAN VIEW
SCALE: NTS

EXEMPT
File Number: 0116528-011-EE
Florida Department of Environmental Protection

Received Electronically
June 26, 2018
South District

City of Key West
PORT & MARINE SERVICES
201 William Street
Key West, FL 33040

HURRICANE IRMA REPAIRS
TARPON PIER
CITY MARINA @ GARRISON BIGHT

PIER LAYOUT

Note: All depths reference Mean Low Water per DEP Tide Station 872-4542.
Mean High Water el. -0.23' NAVD 88; Mean Low Water @ -1.24' NAVD 88.

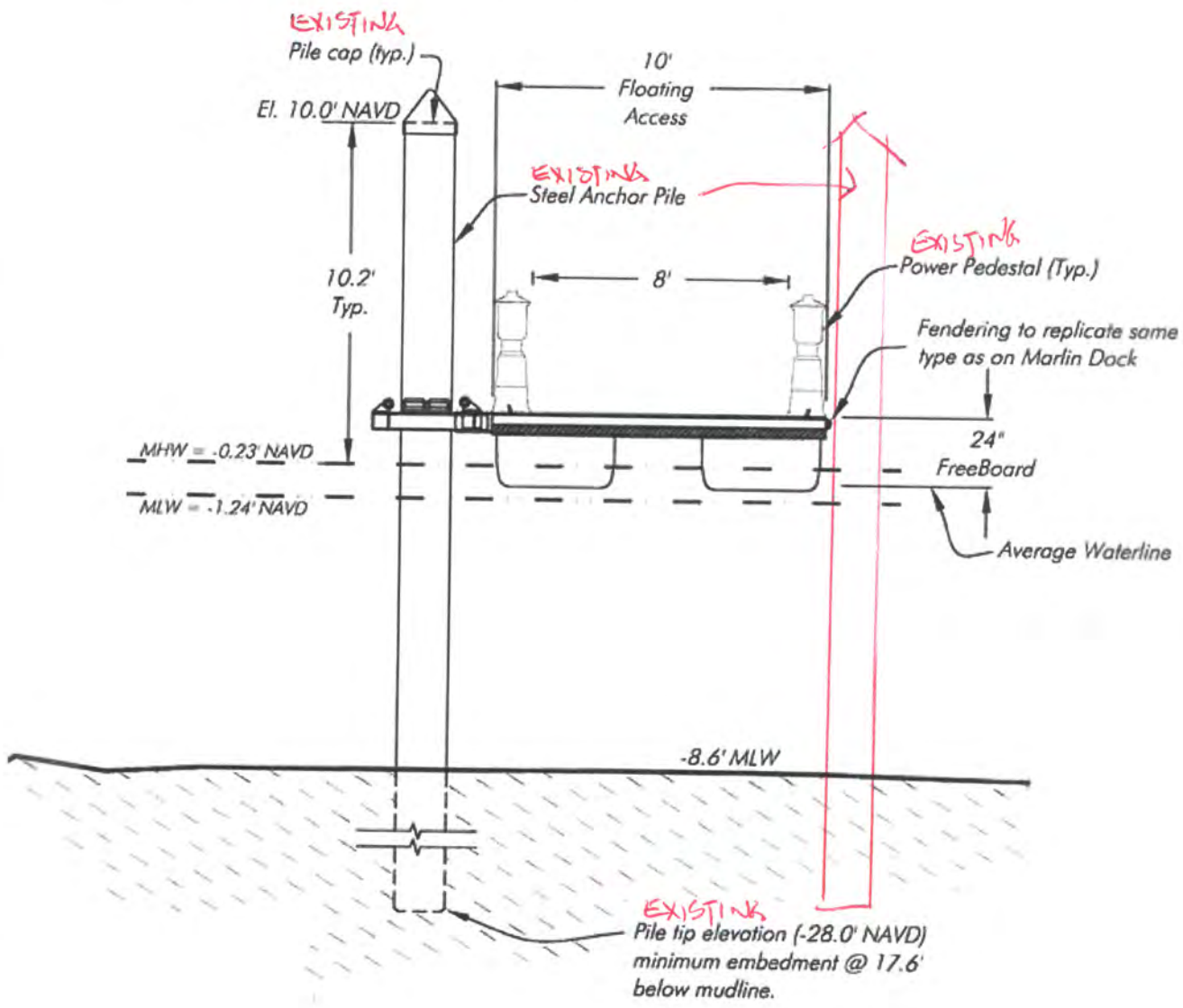

Cross Section A-A

SCALE: NTS

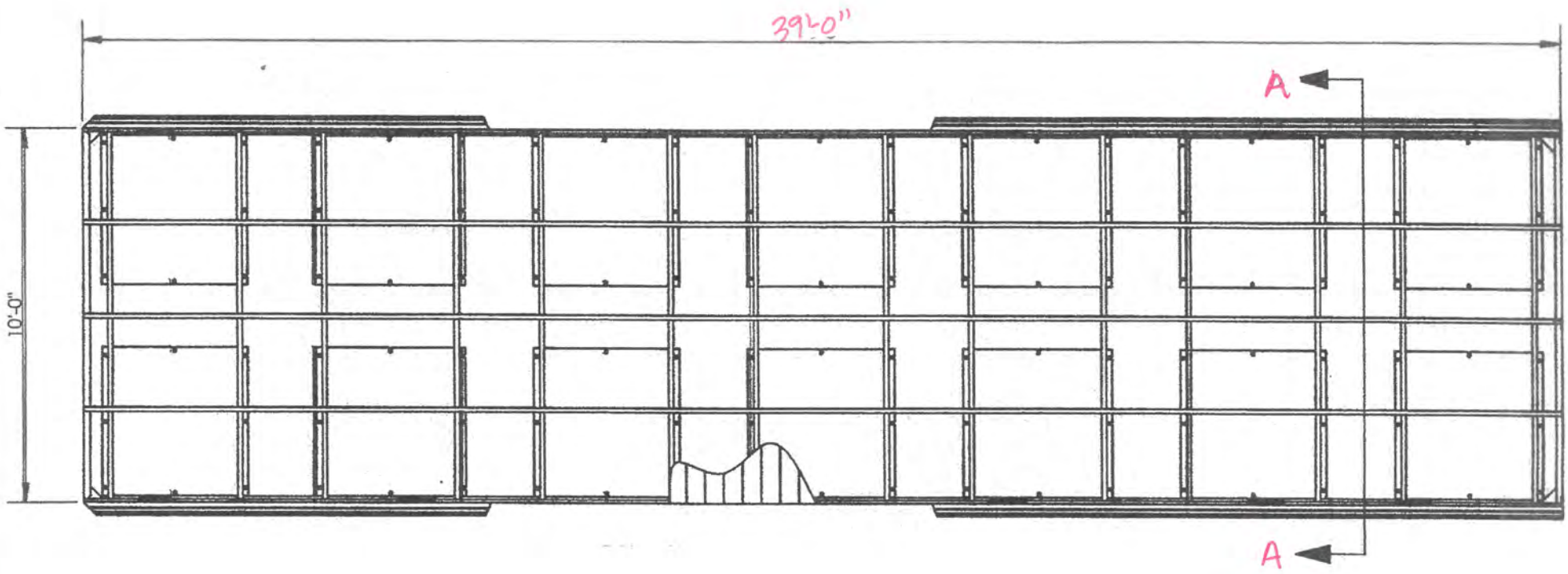

10' x 39' DOCK PLAN VIEW (QTY: 1)

SCALE NTS

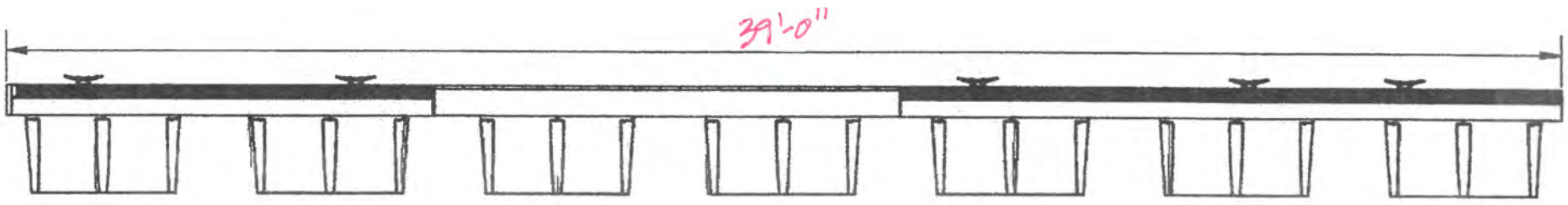

10' x 39' DOCK ELEVATION VIEW (QTY: 1)

SCALE: NTS

Received Electronically
June 26, 2018
South District

EXEMPT
File Number:
0116528-011-EE

Florida Department of Environmental Protection

City of Key West PORT & MARINE SERVICES 201 William Street Key West, FL 33040	HURRICANE IRMA REPAIRS TARPON PIER CITY MARINA @ GARRISON BIGHT
	DOCK PLAN & SECTION

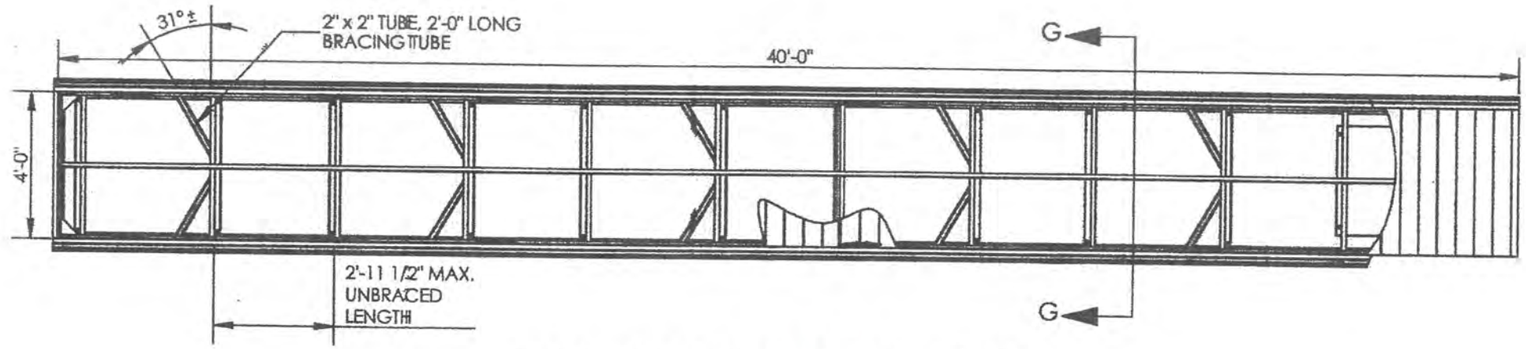

4' x 40' DOCK FINGER 21-22 PLAN VIEW (QTY: 2)
SCALE: NTS

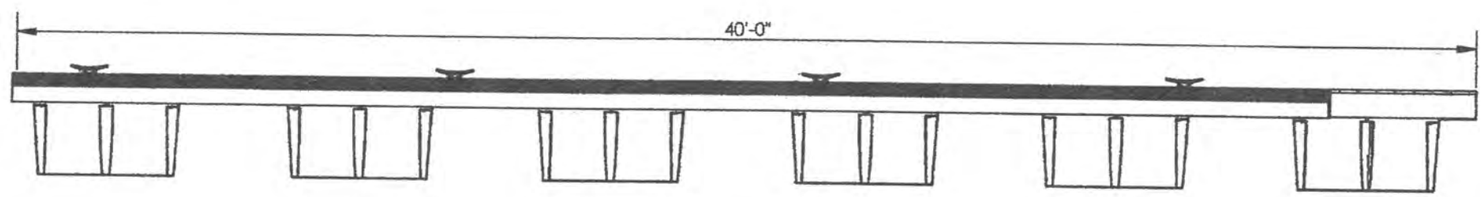

4' x 40' DOCK FINGER 21-22 ELEVATION VIEW (QTY: 2)
SCALE: NTS

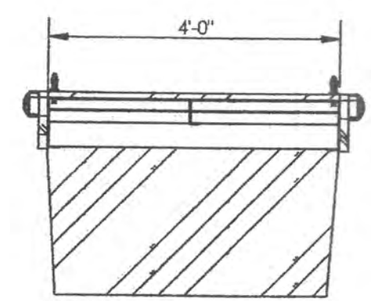

SECTION G-G
SCALE: NTS

Received
Electronically
June 26, 2018
South District

EXEMPT
File Number:
0116528-011-EE

City of
Key West
PORT & MARINE SERVICES
201 William Street
Key West, FL 33040

HURRICANE IRMA REPAIRS
TARPON PIER
CITY MARINA @ GARRISON BIGHT

FINGER PIER & SECTION

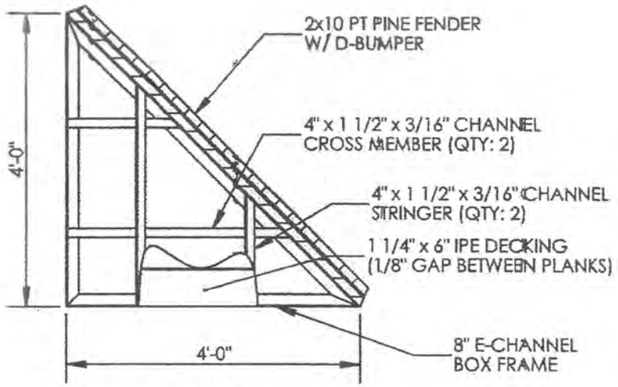

4' x 4' KNEE PLAN VIEW
SCALE NTS

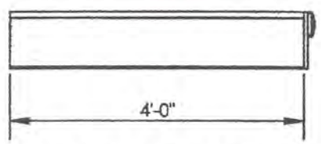

4' x 4' KNEE ELEVATION VIEW
SCALE NTS

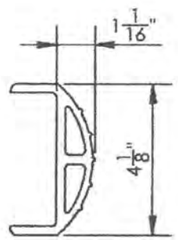

TYPICAL D-BUMPER
SCALE: NTS

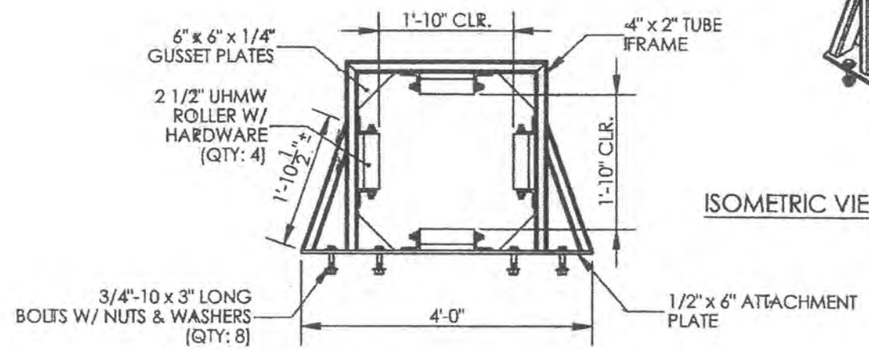

EXTERNAL PILE GUILDE DETAIL
SCALE: NTS

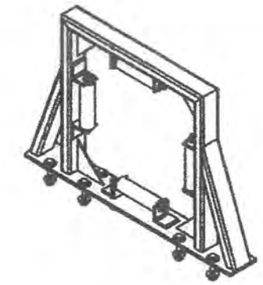

ISOMETRIC VIEW OF EXTERNAL PILE GUILDE
SCALE: NTS

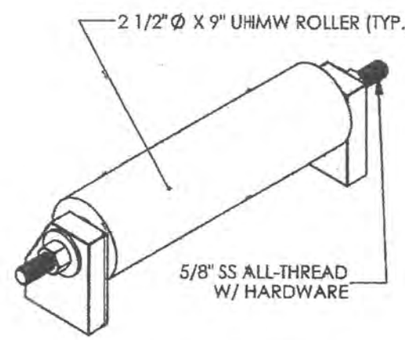

ROLLER KIT DETAIL
SCALE: NTS

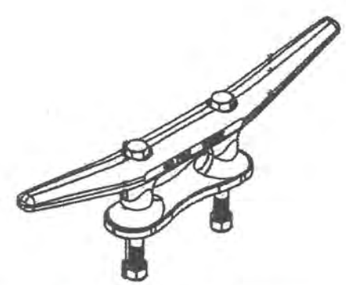

GALVANIZED BOLTED CLEAT W/ HARDWARE
SCALE: NTS
RE-USE EXISTING

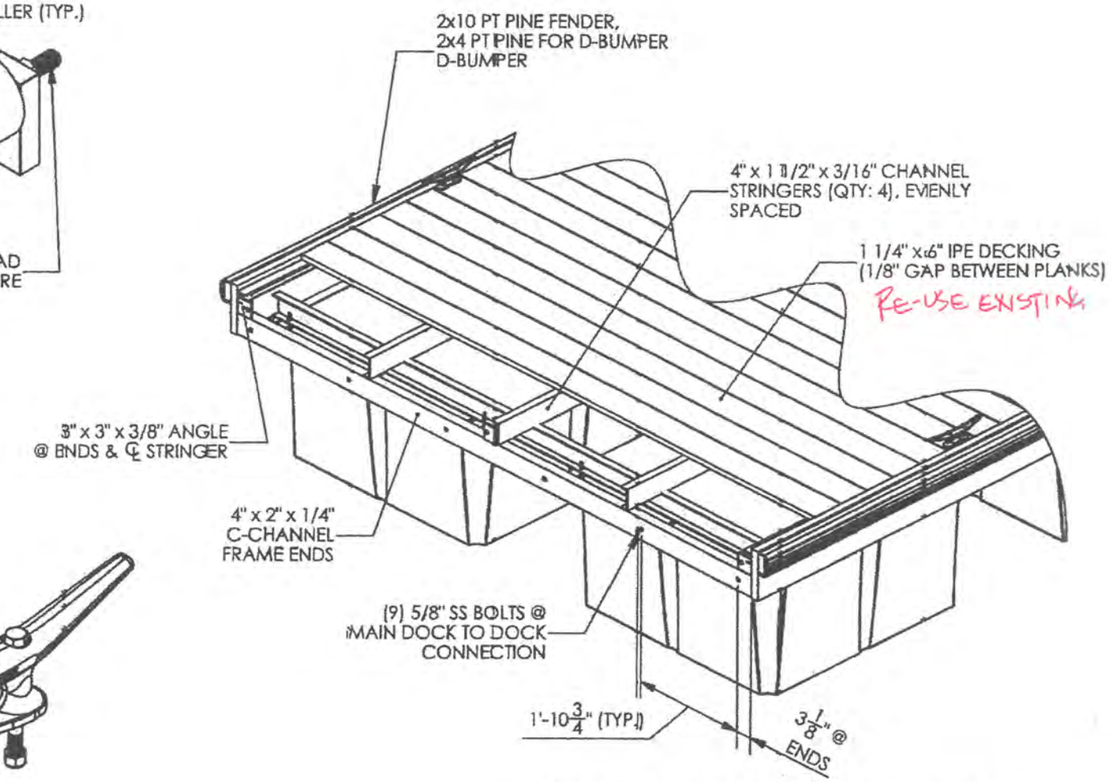

DOCK TO DOCK CONNECTION DETAIL
SCALE: NTS
CONNECTIONS TO BE PLACED @ APPROX 2' ON CENTER

City of Key West
PORT & MARINE SERVICES
2011 William Street
Key West, FL 33040

SEAL OF THE CITY OF KEY WEST, FLORIDA

HURRICANE IRMA REPAIRS
TARPON PIER
CITY MARINA @ GARRISON BIGHT

MISCELLANEOUS DETAILS

Received
Electronically
June 26, 2018
South District

EXEMPT
File Number:
0116528-011-EE
Environmental Protection
Florida Department of

373.406 Exemptions.—The following exemptions shall apply:

(6) Any district or the department may exempt from regulation under this part those activities that the district or department determines will have only minimal or insignificant individual or cumulative adverse impacts on the water resources of the district. The district and the department are authorized to determine, on a case-by-case basis, whether a specific activity comes within this exemption. Requests to qualify for this exemption shall be submitted in writing to the district or department, and such activities shall not be commenced without a written determination from the district or department confirming that the activity qualifies for the exemption.

Appendix II to Part 200 - Contract Provisions for Non-Federal Entity Contracts Under Federal Awards

In addition to other provisions required by the Federal agency or non-Federal entity, all contracts made by the non-Federal entity under the Federal award must contain provisions covering the following, as applicable.

(A) Contracts for more than the simplified acquisition threshold currently set at $150,000, which is the inflation adjusted amount determined by the Civilian Agency Acquisition Council and the Defense Acquisition Regulations Council (Councils) as authorized by 41 U.S.C. 1908, must address administrative, contractual, or legal remedies in instances where contractors violate or breach contract terms, and provide for such sanctions and penalties as appropriate.

(B) All contracts in excess of $10,000 must address termination for cause and for convenience by the non-Federal entity including the manner by which it will be effected and the basis for settlement.

(C) Equal Employment Opportunity. Except as otherwise provided under 41 CFR Part 60, all contracts that meet the definition of "federally assisted construction contract" in 41 CFR Part 60-1.3 must include the equal opportunity clause provided under 41 CFR 60-1.4(b), in accordance with Executive Order 11246, "Equal Employment Opportunity" (30 FR 12319, 12935, 3 CFR Part, 1964-1965 Comp., p. 339), as amended by Executive Order 11375, "Amending Executive Order 11246 Relating to Equal Employment Opportunity," and implementing regulations at 41 CFR part 60, "Office of Federal Contract Compliance Programs, Equal Employment Opportunity, Department of Labor."

(D) Davis-Bacon Act, as amended (40 U.S.C. 3141- 3148). When required by Federal program legislation, all prime construction contracts in excess of $2,000 awarded by non-Federal entities must include a provision for compliance with the Davis-Bacon Act (40 U.S.C. 3141- 3144) as supplemented by Department of Labor regulations (29 CFR Part 5, "Labor Standards Provisions Applicable to Contracts Covering Federally Financed and Assisted Construction"). In accordance with the statute, contractors must be required to pay wages to laborers and mechanics at a rate not less than the prevailing wages specified in a wage determination made by the Secretary of Labor. In addition, contractors must be required to pay wages not less than once a week. The non-Federal entity must place a copy of the current prevailing wage determination issued by the Department of Labor in each solicitation. The decision to award a contract or subcontract must be conditioned upon the acceptance of the wage determination. The non-Federal entity must report all suspected or reported violations to the Federal awarding agency. The contracts must also include a provision for compliance with the Copeland "Anti-Kickback" Act (40 U.S.C. 3145), as supplemented by Department of Labor regulations (29 CFR Part 3, "Contractors and Subcontractors on Public Building or Public Work Financed in Whole or in Part by Loans or Grants from the United States"). The Act provides that each contractor or subrecipient must be prohibited from inducing, by any means, any person employed in the construction, completion, or repair of public work, to give up any part of the compensation to which he or she is otherwise entitled. The non-Federal entity must report all suspected or reported violations to the Federal awarding agency.

(E) Contract Work Hours and Safety Standards Act (40 U.S.C. 3701- 3708). Where applicable, all contracts awarded by the non-Federal entity in excess of $100,000 that involve the employment of mechanics or laborers must include a provision for compliance with 40 U.S.C. 3702 and 3704, as supplemented by Department of Labor regulations (29 CFR Part 5). Under 40 U.S.C. 3702 of the Act, each contractor must be required to compute the wages of every mechanic and laborer on the basis of a standard work week of 40 hours. Work in excess of the standard work week is permissible provided that the worker is compensated at a rate of

not less than one and a half times the basic rate of pay for all hours worked in excess of 40 hours in the work week. The requirements of 40 U.S.C. 3704 are applicable to construction work and provide that no laborer or mechanic must be required to work in surroundings or under working conditions which are unsanitary, hazardous or dangerous. These requirements do not apply to the purchases of supplies or materials or articles ordinarily available on the open market, or contracts for transportation or transmission of intelligence.

(F) Rights to Inventions Made Under a Contract or Agreement. If the Federal award meets the definition of "funding agreement" under 37 CFR § 401.2 (a) and the recipient or subrecipient wishes to enter into a contract with a small business firm or nonprofit organization regarding the substitution of parties, assignment or performance of experimental, developmental, or research work under that "funding agreement," the recipient or subrecipient must comply with the requirements of 37 CFR Part 401, "Rights to Inventions Made by Nonprofit Organizations and Small Business Firms Under Government Grants, Contracts and Cooperative Agreements," and any implementing regulations issued by the awarding agency.

(G) Clean Air Act (42 U.S.C. 7401- 7671q.) and the Federal Water Pollution Control Act (33 U.S.C. 1251- 1387), as amended - Contracts and subgrants of amounts in excess of $150,000 must contain a provision that requires the non-Federal award to agree to comply with all applicable standards, orders or regulations issued pursuant to the Clean Air Act (42 U.S.C. 7401- 7671q) and the Federal Water Pollution Control Act as amended (33 U.S.C. 1251- 1387). Violations must be reported to the Federal awarding agency and the Regional Office of the Environmental Protection Agency (EPA).

(H) Debarment and Suspension (Executive Orders 12549 and 12689) - A contract award (see 2 CFR 180.220) must not be made to parties listed on the governmentwide exclusions in the System for Award Management (SAM), in accordance with the OMB guidelines at 2 CFR 180 that implement Executive Orders 12549 (3 CFR part 1986 Comp., p. 189) and 12689 (3 CFR part 1989 Comp., p. 235), "Debarment and Suspension." SAM Exclusions contains the names of parties debarred, suspended, or otherwise excluded by agencies, as well as parties declared ineligible under statutory or regulatory authority other than Executive Order 12549.

(I) Byrd Anti-Lobbying Amendment (31 U.S.C. 1352) - Contractors that apply or bid for an award exceeding $100,000 must file the required certification. Each tier certifies to the tier above that it will not and has not used Federal appropriated funds to pay any person or organization for influencing or attempting to influence an officer or employee of any agency, a member of Congress, officer or employee of Congress, or an employee of a member of Congress in connection with obtaining any Federal contract, grant or any other award covered by 31 U.S.C. 1352. Each tier must also disclose any lobbying with non-Federal funds that takes place in connection with obtaining any Federal award. Such disclosures are forwarded from tier to tier up to the non-Federal award.

(J) See § 200.322 Procurement of recovered materials.

[78 FR 78608, Dec. 26, 2013, as amended at 79 FR 75888, Dec. 19, 2014]