THE CITY OF KEY WEST
Post Office Box 1409 Key West, FL 33041-1409 (305) 809-3883

ADDENDUM NO. 2
Glynn Archer Gym Repairs – ITB 18-028

This addendum is issued as supplemental information to the bid package for clarification of certain matters of both a general and a technical nature. The referenced Invitation to Bid (ITB) package is hereby amended in accordance with the following items:

Documents attached with this Addendum:

1) *Revised Electrical Drawings Pages E-1, E-3 and E-5 and E-6*

Additional clarifications and Information:

Additions: Per discussions during the pre-bidders conference, the attached drawings include/address the questions below as well as addressing the connection to the existing generator.

1) *Question: Page 1 of the Invitation to Bid states: "Please submit… sections entitled "Bidding Requirements and Contract Forms…" If we are required to submit Part 2, Contract Forms …What is the contractor required to complete and execute in Part 2, Contract Forms since it has the Contract, Payment and Performance Bond and Payment Bond which are usually provided after the award?*
    a. **Disregard part 2, a clean Contract will be provided when the Notice of Award is issued.**

2) *Question: Sheet A-8 states "Division 16 – Electrical (See Electrical Drawings)". No Electrical Specifications are found in the RFP or the Drawings. Please provide.*
    a. **See attached**

3) *Question: On Sheet E-1 "Typical Cat 5 Cable" is showing corrupted **fonts**. Can this be corrected so that it can be read?*
    a. **See attached**

4) *Question: On Sheet E-1 the Lighting Power Density Chart is both incomplete and showing an incorrect quantity of lights. Please provide a complete and corrected chart.*
    a. **See attached**

5) *Question: No Lighting Schedule is found on any of the drawings. Please provide a Lighting Schedule.*
    a. **See attached**

6) *Question: On the bottom left of A-3 drawings, it calls for to "Provide an Alternate to add 8'x 8" acoustical panels"; however, the proposal form only shows 3 alternates which none are for acoustical panels. Will this be added to the proposal form or this alternate be deleted?*
    a. **Disregard the requested alternate for acoustical panels on sheet A-3**

7) *Detail 8 on A-5.3 calls for to provide complete set of shop drawings, signed and sealed by Florida Registered engineer, meeting all required wind loads and codes for this project.*
    To be able to provide these shop drawings, the Engineer of Record has to provide the wind loading for these louvers. Can you please provide the wind loading for these louvers?

a. **See Component and Cladding Wind Pressures detail (Roof zone 3) on Page S-1.2 of the Construction Drawings.**

All Bidders shall acknowledge receipt and acceptance of this Addendum No. 1 with Attachment by submitting the addendum with their proposal. Proposals submitted without acknowledgement or without this Addendum may be considered non-responsive.

_____ _____

Signature Name of Business

LUMINAIRE SCHEDULE

Symbol	Label	Description
	A	COLUMBIA LLHV4-35M-WST-EDU MOUNTED AT 18.5ft A.F.F.
	B	COLUMBIA LLHV4-35L-WST-EDU
	C	COLUMBIA LXEM4-40ML-DFA-EU
	D	COLUMBIA CWM2-35MLxx-FRyy-EDU
	E	NOT USED
	F	DMF DRDHNIC4-DRD2M10935-DRD2TS4SWH
	G	MAXILUME SCH6-LED-PMX-X(LENGTH)-WH-1200L-DIMTR-120-MD-35K-85+-HH6501-SHZ-WH 6" LED DOWNLIGHT
	H	SAME AS FIXTURE "C", FIXTURE TO BE OUTDOOR RATED.
	J	COLUMBIA MPS 2-35-ML-3600-C-W-E-U WITH OCC SENSOR
	K	COLUMBIA LXEN 4-35-LW-RFA-E-U PROVIDE WITH PHOTOCEL
	EBU	EVENLITE TELESIS TCL-2-W PROVIDE TCVS FOR OUTDOORS
	X	EVENLITE TELESIS TEXZ-EM-G, 1C FOR SINGLE FACE

FIXTURE LABELS WITH AN E SHALL BE PROVIDED WITH INTEGRAL EMERGENCY BATTERY PACKS

LIGHTING POWER DENSITY

SPACE	Label	Qty (1)	Lum. Watts	Total Watts	AREA S.F.	LPD Watts/SF
GYM	A	19	154.8	2,941	4,340	0.68
MEZZ. STORAGE	B	2	109.2	218	640	0.34
MECH ROOM	C	1	47	47	128	0.37
FIRST FL STORAGE 113	C, J	3, 1	47, 13.8	155	203	0.76
STORAGE 116	H	1	47	47	165	0.28
RESTROOMS/SHOWERS	C, D, F	4, 6, 5	13.5	335	416	0.81
COVERED PORCH	H	4	47	188	618	0.30
STAIRWAY	G	2	17	34	138	0.25
ENTRYWAY 101	J	2	13.8	28	72	0.39
ENTRYWAY 104	C, F	1, 2	47, 12.8	73	180	0.40
TOTAL	-	-	-	4,066	6,900 (2)	0.65

(1) FIXTURE QUANTITY IS PROVIDED FOR LPD AND SHALL NOT BE USED FOR BIDDING QUANTITY.
(2) AREA INCLUDES SOME OUTDOOR AREAS.

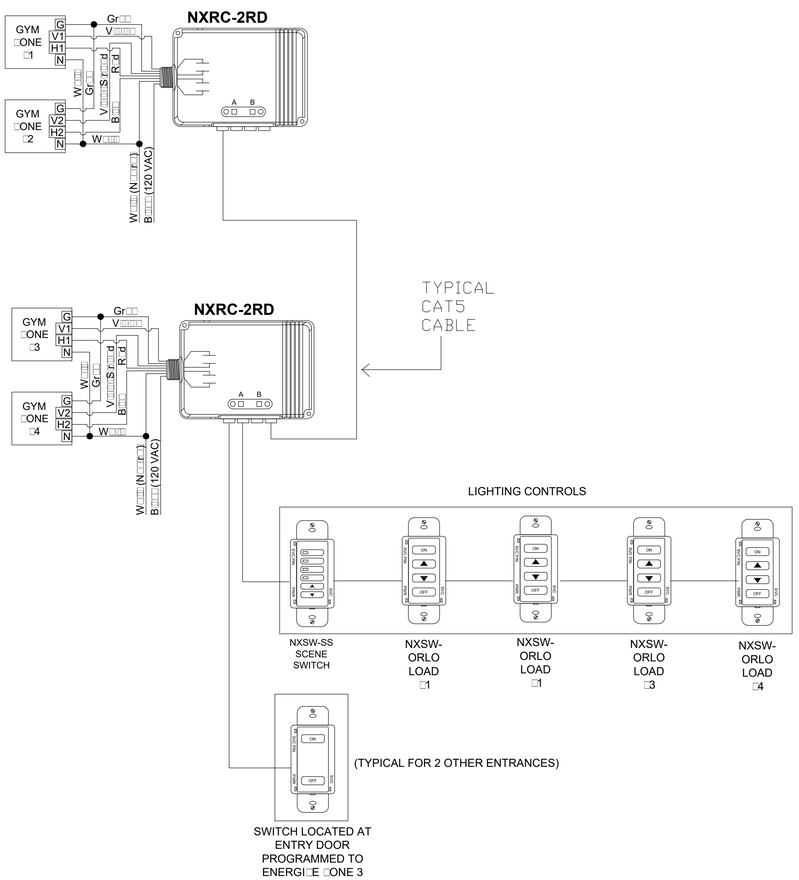

GYMNASIUM LIGHTING CONTROL DIAGRAM

SCALE: NONE

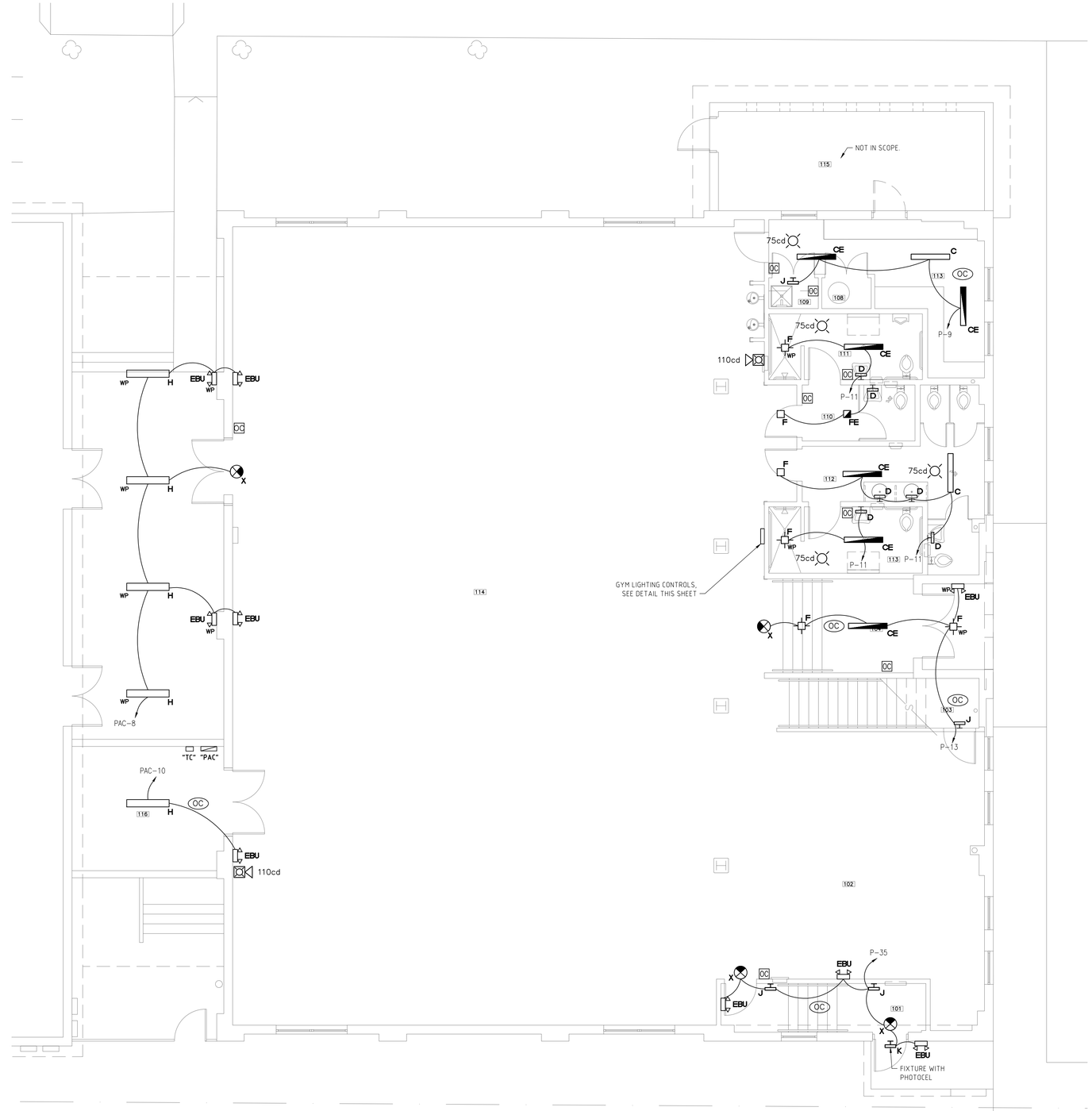

PROPOSED FIRST FLOOR LIGHTING PLAN

SCALE: 3/16"=1'-0"

WILLIAM P. HORN
ARCHITECT, P.A.

915 EATON ST.
KEY WEST,
FLORIDA
33040

TEL. (305) 296-8302
FAX (305) 296-1033

LICENSE NO.
AA 0003040

OLD GYMNASIUM BUILDING
1300 White Street Rear
KEY WEST, FLORIDA.

SEAL
Donald H. Austin, Jr. PE
FL PE No. 60651

DATE
05-15-17 HARC
01-23-18 REV
05-09-18 BID
06-08-18 BLDG. DEPT.

REVISIONS
1 07/06/18 BID RFI

DRAWN BY
DA

PROJECT NUMBER
1702

E-1

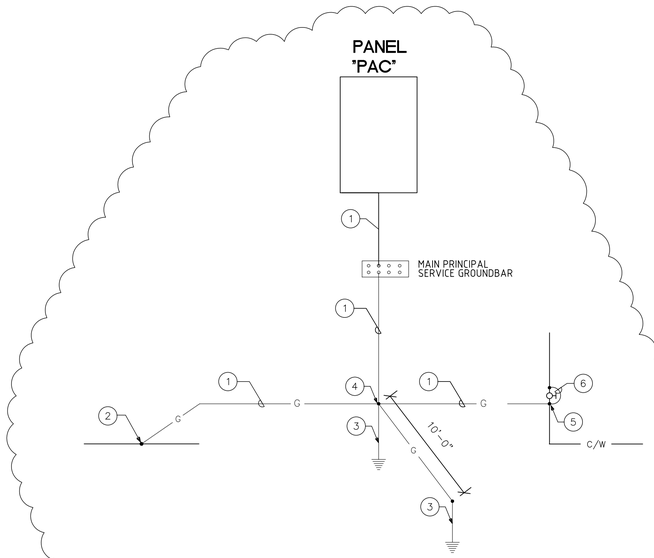

GROUNDING SYSTEM DETAIL

SCALE: NONE

KEY NOTES – GROUNDING

1. (1) #3/0 GROUNDING ELECTRODE CONDUCTOR IN 1" SCHEDULE 40 PVC CONDUIT.
2. EXOTHERMIC CONNECTION. ELECTRICALLY CONTINUOUS STEEL REINFORCING BAR (20FT MIN. LENGTH) IN BOTTOM OF BUILDING FOUNDATION IN DIRECT CONTACT WITH EARTH.
3. 20 FT. LONG x 3/4" DIAMETER COPPER DRIVEN GROUND ELECTRODE.
4. EXOTHERMIC CONNECTION. (TYPICAL)
5. MAKE CONNECTION TO METALLIC COLD WATER ENTRANCE PIPE BEFORE FIRST VALVE WITH HEAVY DUTY BRONZE GROUND CLAMP.
6. PROVIDE (1) 3/0 BONDING JUMPER AROUND FIRST VALVE.

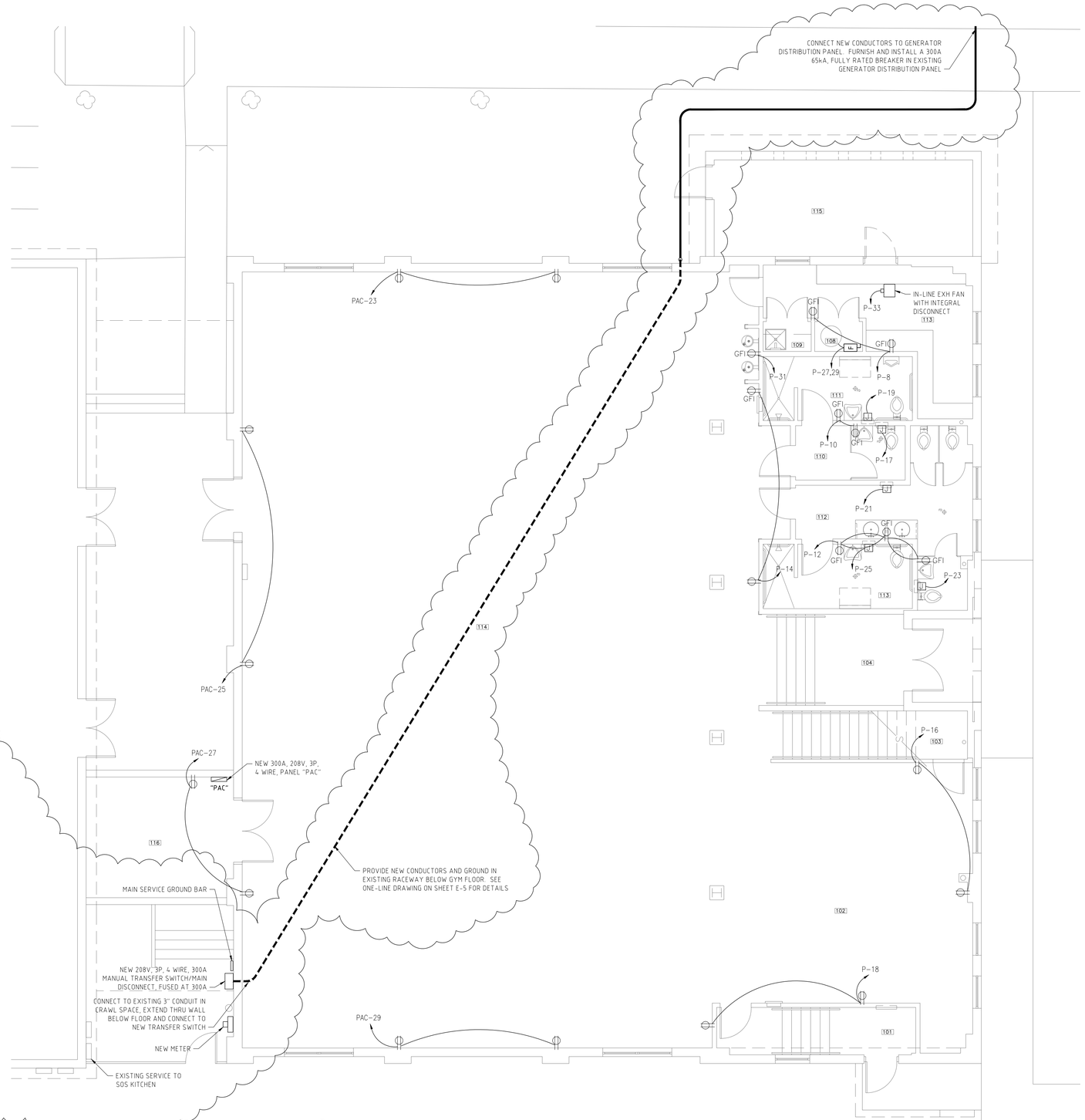

PROPOSED FIRST FLOOR POWER PLAN

SCALE: 3/16"=1'-0"

WILLIAM P. HORN
ARCHITECT , P.A.

915 EATON ST.
KEY WEST,
FLORIDA
33040

TEL. (305) 296-8302
FAX (305) 296-1033

LICENSE NO.
AA 0003040

OLD GYMNASIUM
BUILDING
1300 White Street Rear
KEY WEST, FLORIDA.

SEAL
Donald H. Austin, Jr. PE
FL PE No. 60651

DATE
05-15-17 HARC
01-23-18 REV
05-09-18 BID
06-08-18 BLDG. DEPT.

REVISIONS
2 07/09/18 OWNER CHANGES

DRAWN BY
DA

PROJECT NUMBER
1702

E-3

MFG SQUARE 'D' OR EQUAL | TYPE NQ | KEY NOTES: 1 & 2 | PANEL RATING 300 AMPS
VOLTS 120/208V 3Φ4W | PANEL PAC (NEW PANEL)

BUS A (KVA)	BUS B (KVA)	BUS C (KVA)	LOAD	KEY NOTES	COND	WIRE SIZE	GND	AMPS	CKT	CKT	AMPS	GND	WIRE SIZE	COND	KEY NOTES	LOAD	BUS A (KVA)	BUS B (KVA)	BUS C (KVA)
0.7			BREEZEWAY ROOF RECEPT.		-	-	-	-	1	2	100	8	3	1-1/4"		RTU-1	7.4		
	3.0		CU-1		3/4"	10	10	35	3	4								7.4	
		3.0							5	6									7.4
3.0			CU-2		3/4"	10	10	35	7	8	20	12	12	1/2"		BREEZEWAY LIGHTING	0.5		
	3.0								9	10	20	12	12	1/2"		ROOF AND ST. RM. LTG.		0.5	
		3.0	CU-3		3/4"	10	10	35	11	12	-	-	-	-					
3.0									13	14	-	-	-	-					
	3.0		CU-4		3/4"	10	10	35	15	16	200	6	3/0	2"		PANEL "P1"		20.8	
		3.0							17	18	-	-	-	-					20.8
3.0			CU-5		3/4"	10	10	35	19	20	-	-	-	-			20.8		
	3.0								21	22	-	-	-	-				0.0	
		0.7	RECEPTACLES		1/2"	12	12	20	23	24	-	-	-	-					0.0
0.7			RECEPTACLES		1/2"	12	12	20	25	26	-	-	-	-			0.0		
	0.7		RECEPTACLES		1/2"	12	12	20	27	28	-	-	-	-				0.0	
		0.7	RECEPTACLES		1/2"	12	12	20	29	30	-	-	-	-					0.0
0.0					-	-	-	-	31	32	-	-	-	-			0.0		
	-12.0			3	-	-	-	-	33	34	-	-	-	-				0.0	
		-9.0		3	-	-	-	-	35	36	-	-	-	-					0.0
-9.0				3	-	-	-	-	37	38	-	-	-	-			0.0		
	0.0				-	-	-	-	39	40	-	-	-	-				0.0	
		0.0			-	-	-	-	41	42	-	-	-	-					0.0

TOTALS		
KVA ΦA	KVA ΦB	KVA ΦC
30.1	29.4	29.6

LOAD CALCULATIONS PER NEC 220

1ST 10KVA OF RECEPS.	0.0	AT 100%	0.0
REMAINDER OF RECEPS.	0.0	AT 50%	0.0
LIGHTING	0.0	AT 125%	0.0
LARGEST MOTOR	0.0	AT 125%	0.0
WATER HEATER	0.0	AT 125%	0.0
KITCHEN EQUIPMENT	0.0	AT 65%	0.0
REMAINDER OF LOADS		AT 100%	89.1
		TOTAL KVA	89.1
		TOTAL AMPS	247.3

REMARKS & KEY NOTES

1. MAIN LUGS ONLY. ELECTRICAL CONTRACTOR SHALL PROVIDE AN ACCURATE PER FIELD CONDITIONS, TYPED UP PANEL SCHEDULE UPON COMPLETION OF THE PROJECT.
2. VERIFY ELECTRICAL REQUIREMENTS OF ALL EQUIPMENT PRIOR TO CONSTRUCTION; ALL EQUIPMENT'S ELECTRICAL REQUIREMENTS SHALL BE CONFIRMED WITH MFG SPECS. VERIFY VOLTAGE, AMPERAGE, AND BREAKER SIZES.
3. REDUCTION DUE TO NON CONCURRENT LOAD WITH AHUS AND THE ELECTRIC HEATERS. CONDENSING UNITS ARE THE LOWER OF THE TWO LOADS.

* SEE POWER RISER FOR WIRE & CONDUIT SIZES

MOUNT SURFACE MIN A.I.C. 65,000A

MFG SQUARE 'D' OR EQUAL | TYPE NQ | KEY NOTES: 1, 2 | PANEL RATING 200 AMPS
VOLTS 120/208V 3Φ4W | PANEL P1 (NEW PANEL)

BUS A (KVA)	BUS B (KVA)	BUS C (KVA)	LOAD	KEY NOTES	COND	WIRE SIZE	GND	AMPS	CKT	CKT	AMPS	GND	WIRE SIZE	COND	KEY NOTES	LOAD	BUS A (KVA)	BUS B (KVA)	BUS C (KVA)
1.1			LIGHTING Gym Zone 1		1/2"	12	12	20	1	2	20	12	12	1/2"		RECEPTACLES	0.7		
	0.6		LIGHTING Gym Zone 2		1/2"	12	12	20	3	4	20	12	12	1/2"		RECEPTACLES		0.7	
		0.6	LIGHTING Gym Zone 3		1/2"	12	12	20	5	6	20	12	12	1/2"		RECEPTACLES			0.7
0.6			LIGHTING Gym Zone 4		1/2"	12	12	20	7	8	20	12	12	1/2"		RECEPTACLES	0.7		
	0.4		LIGHTING 1st Floor Storage		1/2"	12	12	20	9	10	20	12	12	1/2"		RECEPTACLES		0.7	
		0.7	LIGHTING Restrooms		1/2"	12	12	20	11	12	20	12	12	1/2"		RECEPTACLES			0.7
0.5			LIGHTING Entry 101		1/2"	12	12	20	13	14	20	12	12	1/2"		RECEPTACLES	0.7		
	0.5		LIGHTING 2nd Floor Storage		1/2"	12	12	20	15	16	20	12	12	1/2"		RECEPTACLES		0.7	
		1.5	Hand Dryer Room 110		1/2"	12	12	20	17	18	20	12	12	1/2"		RECEPTACLES			0.7
1.5			Hand Dryer Room 111		1/2"	12	12	20	19	20	20	-	-	-		SPARE	0.0		
	1.5		Hand Dryer Room 112		1/2"	12	12	20	21	22	50	10	8	3/4"		AHU-1		3.7	
		1.5	Hand Dryer Room 112		1/2"	12	12	20	23	24									3.7
1.5			Hand Dryer Room 113		1/2"	12	12	20	25	26	50	10	8	3/4"		AHU-2	3.7		
	2.3		WATER HEATER		3/4"	8	10	40	27	28								3.7	
		2.3							29	30	50	10	8	3/4"		AHU-3			3.7
0.5			RECEPT. WATER COOLER		1/2"	12	12	20	31	32							3.7		
	0.7		EXHAUST FAN EF-1		1/2"	12	12	20	33	34	50	10	8	3/4"		AHU-4		3.7	
		0.7	LIGHTING		1/2"	12	12	20	35	36									3.7
0.0			SPACE		-	-	-	-	37	38	50	10	8	3/4"		AHU-5	3.7		
	0.0		SPACE		-	-	-	-	39	40								3.7	
		0.0	SPACE		-	-	-	-	41	42	-	-	-	-		SPACE			0.0

TOTALS		
KVA ΦA	KVA ΦB	KVA ΦC
18.9	22.9	20.5

LOAD CALCULATIONS PER NEC 220

1ST 10KVA OF RECEPS.	0.0	AT 100%	0.0
REMAINDER OF RECEPS.	0.0	AT 50%	0.0
LIGHTING	0.0	AT 125%	0.0
LARGEST MOTOR	0.0	AT 125%	0.0
WATER HEATER	0.0	AT 125%	0.0
KITCHEN EQUIPMENT	0.0	AT 65%	0.0
REMAINDER OF LOADS		AT 100%	62.3
		TOTAL KVA	62.3
		TOTAL AMPS	172.9

REMARKS & KEY NOTES

1. MAIN LUGS ONLY.
2. VERIFY ELECTRICAL REQUIREMENTS OF ALL EQUIPMENT PRIOR TO CONSTRUCTION; ALL EQUIPMENT'S ELECTRICAL REQUIREMENTS SHALL BE CONFIRMED WITH MFG SPECS. VERIFY VOLTAGE, AMPERAGE, AND BREAKER SIZES.

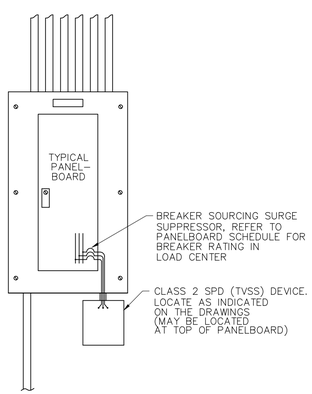

SPD (TVSS) EXTERIOR OPTIONAL MOUNTING DETAILS
SCALE: NOT TO SCALE

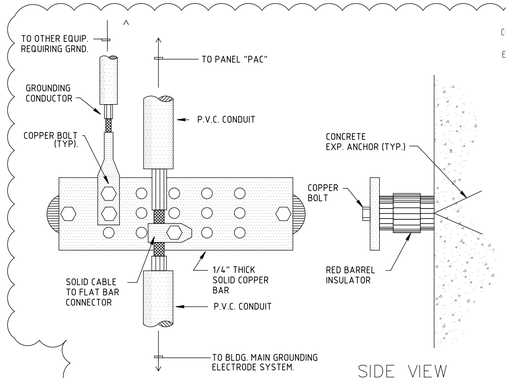

GROUND BAR DETAIL
SCALE: NOT TO SCALE

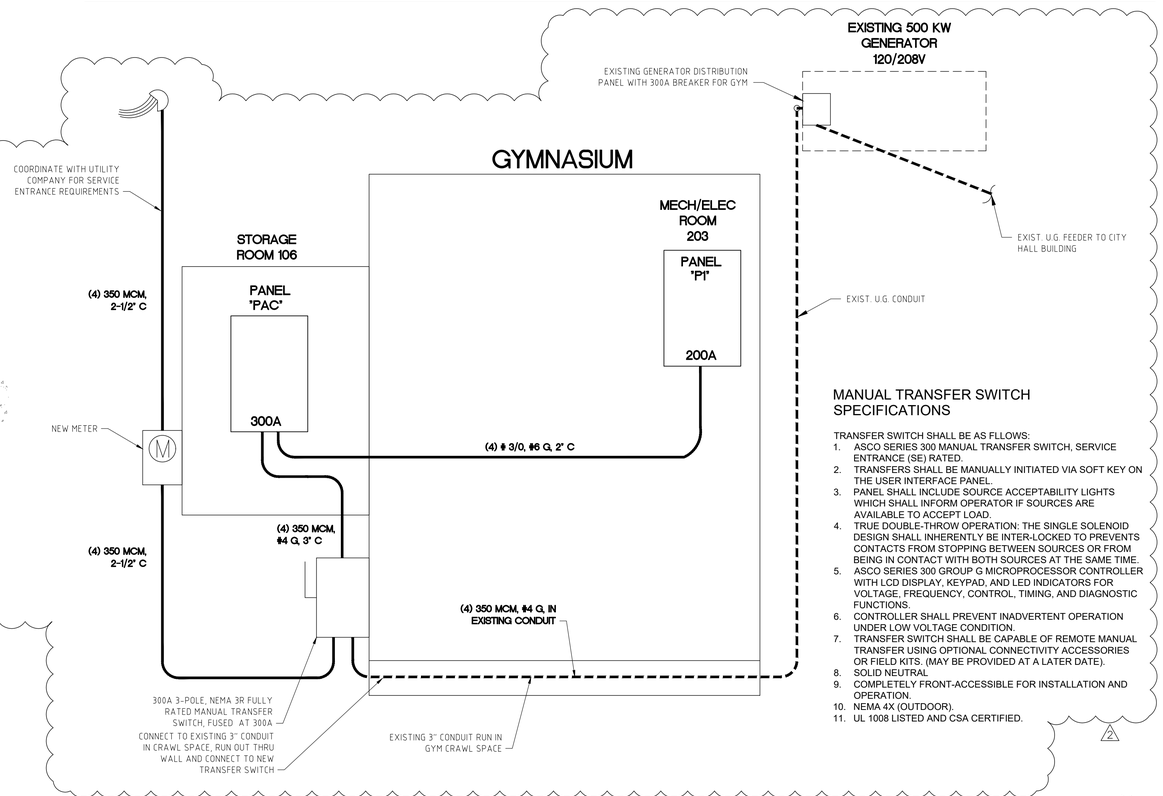

MANUAL TRANSFER SWITCH SPECIFICATIONS

TRANSFER SWITCH SHALL BE AS FLLOWS:

1. ASCO SERIES 300 MANUAL TRANSFER SWITCH, SERVICE ENTRANCE (SE) RATED.
2. TRANSFERS SHALL BE MANUALLY INITIATED VIA SOFT KEY ON THE USER INTERFACE PANEL.
3. PANEL SHALL INCLUDE SOURCE ACCEPTABILITY LIGHTS WHICH SHALL INFORM OPERATOR IF SOURCES ARE AVAILABLE TO ACCEPT LOAD.
4. TRUE DOUBLE-THROW OPERATION: THE SINGLE SOLENOID DESIGN SHALL INHERENTLY BE INTER-LOCKED TO PREVENTS CONTACTS FROM STOPPING BETWEEN SOURCES OR FROM BEING IN CONTACT WITH BOTH SOURCES AT THE SAME TIME.
5. ASCO SERIES 300 GROUP G MICROPROCESSOR CONTROLLER WITH LCD DISPLAY, KEYPAD, AND LED INDICATORS FOR VOLTAGE, FREQUENCY, CONTROL, TIMING, AND DIAGNOSTIC FUNCTIONS.
6. CONTROLLER SHALL PREVENT INADVERTENT OPERATION UNDER LOW VOLTAGE CONDITION.
7. TRANSFER SWITCH SHALL BE CAPABLE OF REMOTE MANUAL TRANSFER USING OPTIONAL CONNECTIVITY ACCESSORIES OR FIELD KITS. (MAY BE PROVIDED AT A LATER DATE).
8. SOLID NEUTRAL
9. COMPLETELY FRONT-ACCESSIBLE FOR INSTALLATION AND OPERATION.
10. NEMA 4X (OUTDOOR).
11. UL 1008 LISTED AND CSA CERTIFIED.

2

WILLIAM P. HORN ARCHITECT, P.A.

915 EATON ST.
KEY WEST,
FLORIDA
33040

TEL. (305) 296-8302
FAX (305) 296-1033

LICENSE NO.
AA 0003040

OLD GYMNASIUM BUILDING
1300 White Street Rear
KEY WEST, FLORIDA.

SEAL
Donald H. Austin, Jr. PE
FL PE No. 60651

DATE
05-15-17 HARC
01-23-18 REV
05-09-18 BID
06-08-18 BLDG. DEPT.

REVISIONS
2 07/09/18 OWNER CHANGES

DRAWN BY
DA

PROJECT NUMBER
1702

E-5

ELECTRICAL SPECIFICATIONS

DIVISION 16 – ELECTRICAL

16010 BASIC ELECTRICAL REQUIREMENTS

A. ALL WORK AND EQUIPMENT UNDER THIS DIVISION SHALL BE IN COMPLIANCE WITH THE CODES, STANDARDS, AND PRACTICES LISTED HEREIN, AS ADOPTED BY THE AUTHORITY HAVING JURISDICTION (AHJ); INCLUDING, BUT NOT LIMITED TO:

1. LIFE SAFETY CODE – NFPA 101.
2. UNDERWRITERS LABORATORIES, INC. PUBLICATIONS.
3. NATIONAL FIRE PROTECTION ASSOCIATION (NFPA).
4. AMERICAN NATIONAL STANDARDS INSTITUTE (ANSI).
5. NATIONAL ELECTRICAL CODE – NFPA 70.
6. INSTITUTE OF ELECTRICAL AND ELECTRONIC ENGINEERS (IEEE).
7. NATIONAL ELECTRICAL MANUFACTURER'S ASSOCIATION (NEMA).
8. INTERNATIONAL POWER CABLE ENGINEER'S ASSOCIATION (IPCEA).
9. NATIONAL ELECTRICAL SAFETY CODE (NBS HANDBOOK 81)..
10. REQUIREMENTS OF LOCAL POWER COMPANY.
11. NATIONAL FIRE PROTECTION ASSOCIATION 72.
12. NATIONAL FIRE PROTECTION ASSOCIATION 99.
13. THE STATE FIRE PREVENTION CODE, 4A60.
14. BUILDING CODE: 2017, SIXTH EDITION FLORIDA BUILDING CODE AND FLORIDA ENERGY CODE.
15. OSHA.
16. NFPA 110.
17. ASHRAE 90.1.

B. SCOPE OF WORK:
THE WORK PROVIDED UNDER THIS DIVISION SHALL INCLUDE ALL LABOR, MATERIALS, PERMITS, INSPECTIONS AND REINSPECTION FEES, TOOLS, EQUIPMENT, TRANSPORTATION, INSURANCE, TEMPORARY PROTECTION, TEMPORARY LIGHTING, SUPERVISION AND INCIDENTAL ITEMS ESSENTIAL FOR PROPER INSTALLATION AND OPERATION, EVEN THOUGH NOT SPECIFICALLY MENTIONED OR INDICATED BUT WHICH ARE USUALLY PROVIDED OR ARE ESSENTIAL FOR PROPER INSTALLATION AND OPERATION OF ALL ELECTRICAL SYSTEMS AS INDICATED IN CONTRACT DOCUMENTS.

1. CONNECTION OF ALL EQUIPMENT FURNISHED BY OTHERS OR IN CONTRACT.

C. NOTICES:
GIVE ALL NOTICES, FILE ALL PLANS, PAY ALL FEES, OBTAIN ALL PERMITS AND APPROVALS FROM AUTHORITIES HAVING JURISDICTION. INCLUDE ALL PLAN REVIEW, PERMITTING, ENVIRONMENTAL AND FPL/UTILITY CHARGES AND FEES IN THE BID PRICE.

D. INTERPRETATION OF DRAWINGS:

1. THE DRAWINGS ARE DIAGRAMMATIC AND ARE NOT INTENDED TO SHOW EXACT LOCATIONS OF CONDUIT RUNS, OUTLET BOXES, JUNCTION BOXES, PULL BOXES, ETC. THE LOCATIONS OF EQUIPMENT, APPLIANCES, FIXTURES, CONDUITS, OUTLETS, BOXES AND SIMILAR DEVICES SHOWN ON THE DRAWINGS ARE APPROXIMATE ONLY. EXACT LOCATIONS SHALL BE AS ACCEPTED BY THE ENGINEER DURING CONSTRUCTION. OBTAIN IN THE FIELD ALL INFORMATION RELEVANT TO THE PLACING OF ELECTRICAL WORK AND IN CASE OF INTERFERENCE WITH OTHER WORK, PROCEED AS DIRECTED BY THE ENGINEER AND PROVIDE AL LABOR AND MATERIALS NECESSARY TO COMPLETE THE WORK IN AN ACCEPTABLE MANNER.

2. DISCREPANCIES:
NOTIFY ARCHITECT/ENGINEER OF ANY DISCREPANCIES FOUND DURING CONSTRUCTION OF THE PROJECT AND DO NOT PROCEED WITH THAT PORTION OF THE PROJECT, UNTIL A WRITTEN DEFINITIVE STATEMENT IS RECEIVED PROVIDING CLEAR DIRECTION. IF A CONFLICT EXISTS BETWEEN THE CONTRACT DOCUMENTS AND ANY APPLICABLE CODE OR STANDARD, THE MOST STRINGENT REQUIREMENT SHALL BE INCLUDED FOR THIS PROJECT. THE ENGINEER SHALL MAKE THE DECISION REGARDING QUESTIONABLE AREAS OF CONFLICT.

3. WIRING:
EACH THREE-PHASE CIRCUIT SHALL BE RUN IN A SEPARATE CONDUIT UNLESS OTHERWISE SHOWN ON THE DRAWINGS. UNLESS OTHERWISE ACCEPTED BY THE ENGINEER, CONDUIT SHALL NOT BE INSTALLED EXPOSED UNLESS SPECIFICALLY DIRECTED. PROVIDE CONCEALED, NON EXPOSED RACEWAYS IN FINISHED OR ARCHITECTURALLY SENSITIVE AREAS . WHERE CIRCUITS ARE SHOWN AS "HOME-RUNS" ALL NECESSARY FITTINGS AND BOXES SHALL BE PROVIDED FOR A COMPLETE RACEWAY INSTALLATION.

IN GENERAL, ALL LIGHTING BRANCH CIRCUITS SHALL BE SEPARATE FROM POWER AND RECEPTACLE BRANCH CIRCUITS.

ALL BRANCH CIRCUITS SERVICING COMPUTER LOADS SHALL HAVE A DEDICATED NEUTRAL CONDUCTOR.

E. INVESTIGATION ON SITE:

1. GENERAL: BEFORE COMMENCING THE WORK, VERIFY EXISTING CONDITIONS AT THE PREMISES INCLUDING, BUT NOT LIMITED TO, EXISTING STRUCTURAL FRAME, LOCATION AND ALL DIMENSIONS; EXISTING OPENINGS AND CHARACTERISTICS; EXISTING WALL AND PARTITION LOCATIONS, CHARACTERISTICS AND RELATIONSHIP TO EACH OTHER; EXISTING MECHANICAL AND ELECTRICAL WORK, EQUIPMENT TYPE, AND SHALL EXAMINE ALL ADJOINING WORK ON WHICH HIS WORK IF ANYWAY DEPENDENT FOR ITS PERFECT EFFICIENCY ACCORDING TO THE INTENT OF THE CONTRACT DOCUMENTS.

2. POWER OUTAGE:
SPECIAL ATTENTION IS CALLED TO THE FACT THAT IF WORK INVOLVED IS IN CONNECTION WITH EXISTING BUILDINGS WHICH REMAIN IN OPERATION WHILE WORK IS BEING PERFORMED. WORK MUST BE DONE IN ACCORDANCE WITH THE PRIORITY SCHEDULE. SCHEDULE WORK FOR A MINIMUM OUTAGE TO OWNER. REQUEST WRITTEN PERMISSION AND RECEIVE WRITTEN ACCEPTANCE FROM THE OWNER NO LATER THAN 24 HOURS IN ADVANCE OF ALL POWER AND COMMUNICATION SHUT-DOWNS. PERFORM WORK REQUIRED AT OTHER THAN STANDARD WORKING HOURS WHERE OUTAGES CANNOT BE ACCEPTED BY OWNER DURING REGULAR WORKING HOURS. PROTECT EXISTING BUILDINGS AND EQUIPMENT DURING CONSTRUCTION. PROVIDE TEMPORARY POWER, GENERATORS, CIRCUIT ALTERATIONS AS MAY BE REQUIRED FOR MAINTENANCE OF OPERATIONS.

3. SPECIAL CONSIDERATIONS:
SPECIAL ATTENTION IS CALLED TO THE FACT THAT IF THERE WILL BE PIPING, FIXTURES OR OTHER ITEMS IN THE EXISTING SITE OR BUILDING WHICH MUST BE REMOVED OR RELOCATED IN ORDER TO PERFORM THE ALTERATION WORK, BID SHALL INCLUDE ALL REMOVAL, RELOCATION, AND RE-CONNECTION REQUIRED FOR COMPLETION OF THE ALTERATIONS AND THE NEW CONSTRUCTION.

4. DEMOLITION – GENERAL:
DURING THE EXECUTION OF WORK, ALL REQUIRED RELOCATION, REROUTING, ETC, OF EXISTING BUILDING AREAS WHERE THE WORK IS REQUIRED, SHALL BE PERFORMED BY THE CONTRACTOR, AS INDICATED ON THE DRAWINGS, OR AS REQUIRED BY JOB CONDITIONING AND AS DETERMINED BY THE ARCHITECT IN THE FIELD, TO FACILITATE THE INSTALLATION OF THE NEW SYSTEMS. THE OWNER SHALL REQUIRE CONTINUOUS OPERATION OF THE EXISTING SYSTEMS, WHILE DEMOLITION, RELOCATION WORK OR NEW TIE-INS ARE PERFORMED.

5. OWNER'S SALVAGE: THE OWNER RESERVES THE RIGHT TO INSPECT THE MATERIAL SCHEDULED FOR REMOVAL AND SALVAGE ANY ITEMS HE DEEMS USABLE AS SPARE PARTS.

F. EXISTING CONDITIONS:

1. SUPPORT:
ALL EXISTING CONDUIT AND CABLES WITHIN THE AREA OF RENOVATION SHALL BE PROVIDED WITH PROPER SUPPORT AS SPECIFIED FOR NEW WORK IN OTHER SECTIONS OF THIS SPECIFICATION.

2. INSTALLATION:
ALL EXISTING ELECTRICAL WHICH IS DESIGNATED FOR REWORKING OR REQUIRES RELOCATION, REPAIR OR ADJUSTMENT SHALL CONFORM TO ALL APPLICABLE CODES AND SHALL BE TREATED AS NEW WORK COMPLYING TO ALL SECTIONS OF THIS SPECIFICATION.

3. VIOLATIONS:
WHERE EXISTING CONDITIONS ARE DISCOVERED WHICH ARE NOT IN COMPLIANCE WITH THE CODES AND STANDARDS, THE CONTRACTOR SHALL SUBMIT PROPER DOCUMENTATION TO THE ARCHITECT FOR CLARIFICATION AND CORRECTIVE WORK DIRECTION. EXISTING CONDITIONS SHALL NOT REMAIN WHICH WILL CREATE A DISAPPROVAL OF THE RENOVATED AREA.

4. PATCHING:
ALL EXISTING CONDUIT AND CABLE PENETRATIONS SHALL BE PROPERLY FIRE TREATED PER CODE AND SPECIFICATION REQUIREMENTS. THE CONTRACTOR SHALL THOROUGHLY INSPECT ALL EXISTING LOCATIONS AND INCLUDE THE COST OF PATCHING AND REPAIR IN HIS PROPOSED CONSTRUCTION COST.

G. ALL MATERIALS SHALL BE NEW, FREE FROM DEFECTS AND SHALL BE EITHER U.L. LABELED, U.L. LISTED OR BEAR THE SEAL OF A NATIONALLY RECOGNIZED ELECTRICAL TESTING LABORATORY DEEMED ACCEPTABLE BY AHJ.

H. SHOP DRAWINGS AND PRODUCT DATA ARE REQUIRED FOR ALL MATERIALS AND EQUIPMENT.

I. ALL EQUIPMENT SHALL BE FIRMLY MOUNTED USING APPROVED HANGERS ATTACHED TO STRUCTURAL PORTIONS OF THE BUILDING. SUPPORTING WITH TIE WIRE IS PROHIBITED. LIGHT FIXTURES RECESSED IN CEILINGS SHALL BE SUPPORTED FROM THE BUILDING STRUCTURE INDEPENDENT OF THE CEILING SYSTEM.

J. SERVICE SHALL MEET THE REQUIREMENTS OF THE LOCAL UTILITY COMPANY AND ALL PROVISIONS OF NFPA 70. CONSTRUCTION POWER, TEMPORARY LIGHT AND POWER SHALL BE PROVIDED AS REQUIRED AND DESIGNED/PERMITTED BY CONTRACTOR.

K. SYSTEMS GUARANTEE:
PROVIDE A ONE-YEAR GUARANTEE. THIS GUARANTEE SHALL BE BY THE CONTRACTOR TO THE OWNER FOR ANY DEFECTIVE WORKMANSHIP OR MATERIAL WHICH HAS BEEN PROVIDED UNDER THIS CONTRACT AT NO COST TO THE OWNER FOR A PERIOD IF ONE-YEAR FROM THE DATE OF SUBSTANTIAL COMPLETION OF THE SYSTEM. THE GUARANTEE SHALL INCLUDE ALL LAMPS, FOR NINETY DAYS AFTER DATE OF SUBSTANTIAL COMPLETION OF THE SYSTEM. EXPLAIN THE PROVISIONS OF GUARANTEE TO THE OWNER AT THE "DEMONSTRATION OF COMPLETED SYSTEM". PROVIDE AN 11 MONTH WARRANTY WALK-THROUGH WITH OWNER'S REPR AND CORRECT ALL DEFICIENCIES TO OWNER'S SATISFACTION. PREPARE WRITTEN REPORT DOCUMENTING FINDINGS, ACTIONS, RECOMMENDATIONS FOR OWNER.

L. RELATED WORK AND DOCUMENTS: CONTRACTOR SHALL REVIEW THE COMPLETE PROJECT DOCUMENTS PRIOR TO BIDDING. ALL SECTIONS INCLUDING, BUT NOT LIMITED TO, SPECIAL AND GENERAL CONDITIONS ARE TO BE COORDINATED AND MADE PART OF BIDDING AND THIS PROJECT.

M. PROVIDE ALL EXTERIOR SUPPORTS AND SYSTEMS IN COMPLIANCE WITH HIGH VELOCITY HURRICANE ZONE REQUIREMENTS (HVHZ). PROVIDE CERTIFICATIONS AND MIAMI-DADE N.O.A. DOCUMENTATION.

N. REQUESTS FOR SUBSTITUTIONS:

1. CONTRACTOR SHALL PREPARE REQUESTS WITH COMPLETE COORDINATION INFORMATION. INCLUDE ALL CHANGES REQUIRED IN OTHER ELEMENTS OF THE WORK TO ACCOMMODATE THE SUBSTITUTION INCLUDING WORK PERFORMED BY THE OWNER AND THE SEPARATE CONTRACTORS.

2. PROVIDE COMPLETE SUPPORTING DATA QUALIFYING THE SUBSTITUTION COMPARED TO THE BASIS OF DESIGN SYSTEM. PROVIDE A DETAILED LIST OF ANY VARIANCES, LIGHTING POWER DENSITY (LPD) SPACE BY SPACE CALCULATIONS, SPACE OR ROOM PHOTOMETRICS, PHYSICAL OR SPATIAL LAYOUTS, ELEVATIONS, ETC. TO THE BASIS OF DESIGN.

3. PROVIDE A STATEMENT INDICATING THE EFFECT THE SUBSTITUTION WILL HAVE ON THE WORK SCHEDULE IN COMPARISON TO THE SCHEDULE WITHOUT APPROVAL OF THE PROPOSED SUBSTITUTION. INCLUDE INFORMATION REGARDING THE EFFECT OF THE PROPOSED SUBSTITUTION ON THE CONTRACT TIME.

4. PROVIDE COMPLETE COST INFORMATION INCLUDING A PROPOSAL OF THE NET CHANGE, IF ANY, IN THE CONTRACT SUM.

5. PROVIDE CERTIFICATION BY THE CONTRACTOR TO THE EFFECT THAT, IN THE CONTRACTOR'S OPTION, AFTER THOROUGH EVALUATION, THE PROPOSED SUBSTITUTION WILL RESULT IN WORK THAT IN EVERY SIGNIFICANT RESPECT IS EQUAL TO OR BETTER THAN THE WORK REQUIRED BY THE CONTRACTOR DOCUMENTS AND THAT IT WILL PERFORM ADEQUATELY IN THE APPLICATION INDICATED.

16020 TEST AND PERFORMANCE VERIFICATION: COMPLETION OF WORK

A. INSTALL, ADJUST AND TEST ALL ELECTRICAL SYSTEMS.

B. CABLES, MOTORS, GROUNDS, TRANSFORMERS, AND THE EMERGENCY SYSTEM SHALL BE THOROUGHLY TESTED. CONTRACTOR SHALL PROVIDE A REPORT INDICATING THE RESULTS OF ALL TESTS.

C. PREPARE OPERATION AND MAINTENANCE MANUALS, AS BUILDS.

16030 ELECTRICAL IDENTIFICATION

A. LANGUAGE: ALL IDENTIFICATION SHALL BE IN ENGLISH.

B. CONDUITS SYSTEM MAKERS SHALL BE ENGRAVED PLASTIC, LAMINATE NAMEPLATES AND SHALL BE ADHESIVE OR PRE-TENSIONED SNAP ON COLOR CODED, SYSTEM MARKING MATERIALS.

C. IDENTIFICATION: IDENTIFY ALL RACEWAYS PROVIDED OR UTILIZED AS PART OF THIS PROJECT AS FOLLOWS:

1. APPLY BANDS 10 FEET ON CENTER ALONG THE RACEWAY SYSTEM AND AT EACH SIDE OF WALLS OR FLOORS, AND AT BRANCHES FROM MAINS.

2. IDENTIFY THE FOLLOWING SERVICES:

SERVICE	LABEL
A. 208/120	HIGH VOLTAGE
C. FIRE ALARM	FIRE ALARM
D. TELEPHONE	TELEPHONE

3. SPOT PAINTING ON ROUGH-IN:

A. CONDUIT, RACEWAYS, BOXES, BACKBONES, PANELBOARDS, ETC. SHALL BE SPOT PAINTED. CONDUIT SHALL BE IDENTIFIED WITHIN 6 INCHES OF THE BOX OR ENCLOSURE. THE ENTIRE BOX AND COVERPLATE SHALL BE PAINTED.

D. USE THE FOLLOWING COLORS FOR COLOR BANDS AND FOR COLOR CODING:

SYSTEM	COLOR
1) NORMAL POWER	WHITE
2) MISCELLANEOUS COMMUNICATIONS	BROWN
3) FIRE ALARM	RED
4) TELEPHONE/COMPUTER	BLACK

E. CABLE AND CONDUCTOR IDENTIFICATION WILL BE AS PER NFPA 70

F. OPERATIONAL SIGNAGE SHALL BE PROVIDED WHERE REQUIRED.

G. PROVIDE NAME PLATES, SECURITY FASTENED, ON ALL MAJOR EQUIPMENT.

H. PROVIDE "ARC FLASH"WARNING SIGNAGE.

16110 BASIC MATERIALS AND METHODS

A. RACEWAYS AND FITTINGS:

1. ALL WIRING SHALL BE INSTALLED IN APPROPRIATE RACEWAY SYSTEMS OF RIGID GALVANIZED (RGS) CONDUIT, ELECTRICAL METALLIC TUBING, FLEXIBLE STEEL CONDUIT AND LIQUID-TIGHT FLEXIBLE CONDUIT AS CONDITIONS AND CODES DICTATE. EMT SHALL BE JOINED WITH STEEL COMPRESSION TYPE FITTINGS.

A. IN STUD PARTITIONS, CONCEALED ABOVE CEILING: EMT

B. IN MECHANICAL ROOMS, SUBJECT TO ABUSE: RGS

C. BURIED CONDUIT:

6. 1" MINIMUM TRADE SIZE
7. IN CONCRETE – RGS, SCH 40/80 PVC, RGS SWEEPS
8. BELOW SLABS – RGS, SCH 40/80 PVC, RGS SWEEPS
9. DIRECT BURY – EXTERIOR: RGS, SCH 40/80 PVC
10. STUBS THRU SLABS – RGS

D. FLEXIBLE METALLIC RACEWAY – 24" MAX LENGTH

2. ALL CONDUIT SHALL HAVE AN INSULATED COPPER EQUIPMENT GROUNDING CONDUCTOR THROUGHOUT THE ENTIRE LENGTH OF THE CIRCUIT WITHIN THE CONDUIT.

3. MINIMUM SIZE: 3/4", UNLESS OTHERWISE NOTED (UON).

16120 WIRES AND CABLES

A. ALL BRANCH CIRCUITS SHALL BE COPPER WITH THHN OR THWN INSULATION. MINIMUM SIZE #12 AWG.

B. FEEDERS AND SUBFEEDERS SIZE #4 AND LARGER SHALL BE XHHW COPPER, UNLESS OTHERWISE NOTED.

C. COLOR CODING SHALL COMPLY WITH THE NATIONAL ELECTRIC CODE OR JURISDICTION SPECIFICALLY. PHASE CONDUCTORS OF EACH VOLTAGE SYSTEM MUST BE OF A DIFFERENT COLOR. NEUTRALS SHALL BE WHITE FOR 120/208 AND GRAY FOR 277/480. EQUIPMENT GROUNDING CONDUCTORS SHALL BE GREEN INSULATED.

D. TAPS AND SPLICES: FOR #8 OR SMALLER CONDUCTORS SHALL USE PRE-INSULATED SCOTCHLOCK OR IDEAL WING-NUT SPRING TENSION CONNECTIONS, FOR LARGER THAN #8 CONDUCTORS USE APPROVED SOLDERLESS, PRESSURE TYPE BOLTED CONNECTORS.

E. EXTERIOR CIRCUITS SHALL USE BOLTED CONNECTOR, GEL FILLED CAPS.

16130 OUTLET BOXES

A. OUTLET BOXES SHALL BE ONE PIECE OR PROJECTION WELDED, GALVANIZED STAMPED STEEL FOR GANG SIZES REQUIRED. SECTIONAL BOXES ARE NOT ACCEPTABLE. BOXES SHALL BE 4" SQUARE AND 1-1/2" DEEP GENERALLY. LARGER BOXES SHALL BE USED AS REQUIRED BY CODE.

PULL/JUNCTION BOXES: GALVANIZED STEEL, 14 GAUGE MINIMUM, INSTALL IN ACCESSIBLE LOCATIONS.

16140 WIRING DEVICES

A. ALL RECEPTACLES SHALL BE 20 AMP, 125 VOLT GROUNDING TYPE, (SPECIFICATION GRADE) AND MOUNTED AT 18" AFF.

B. SWITCHES SHALL BE 20 AMP, 125 VOLT SILENT TYPE, SPECIFICATION GRADE, AND MOUNTED AT 48" AFF.

C. RECEPTACLES LOCATED WHERE WATER OR WET CONDITIONS EXIST SHALL BE ON GROUND FAULT CIRCUITS.

D. DEVICE PLATES SHALL BE 302 STAINLESS STEEL. DEVICE COLORS SHALL BE IVORY. EMERGENCY RECEPTACLES SHALL BE RED.

E. APPROVED MANUFACTURERS: HUBBEL, PASS & SEYMOR, LEVITON.

16425 SERVICE AND DISTRIBUTION

A. SERVICE FROM TRANSFORMER TO MAIN SERVICE EQUIPMENT SHALL BE UNDERGROUND.

16450 GROUNDING

A. GENERAL: PROVIDE A COMPLETE GROUNDING SYSTEM IN ACCORDANCE WITH NEC.

1. EQUIPMENT GROUNDING CONDUCTOR IN ALL RACEWAY SYSTEMS.

2. INSTALL GROUNDING BUSHINGS.

3. INSTALL GROUNDING BONDING JUMPER ACROSS ALL BUILDING EXPANSION JOINTS AND RACEWAY EXPANSION FITTINGS.

4. INSTALL GROUNDING ELECTRODE SYSTEM AS REQUIRED BY AHJ.

5. PROVIDE A GROUND TEST WELL FOR SERVICE AT THE GROUND ROD CLOSEST TO THE SERVICE ENTRANCE.

6. USE EXOTHERMIC SYSTEMS FOR ALL UNDERGROUND CONNECTIONS.

7. PROVIDE GROUND BARS IN ALL ELECTRIC AND TELCOM ROOMS.

8. PROVIDE A MAIN PRINCIPLE GROUND TRIAD FOR SERVICE ENTRANCE .

9. CERTIFY GROUND SYSTEM TESTING TO ACHIEVE LESS THAN 5 OHMS USING A CLAMP-ON OR 3 POINT FALL OF POTENTIAL TESTER.

10. PROVIDE SUPPLEMENTARY ELECTRODES, UFER GROUNDS TO ACHIEVE RESISTANCE OHMS.

16470 PANELBOARDS

A. PANELS SHALL BE FULL SIZE, MINIMUM 20" WIDE X 5-3/4" DEEP USING FULL SIZE, BOLT-ON QUICK-BREAK CIRCUIT BREAKERS OF THE THERMAL MAGNETIC TYPE. MAINS SHALL BE LUGS ONLY OR MAIN BREAKERS AS REQUIRED. ALL PANELS TO HAVE SEPARATE EQUIPMENT GROUND BAR AND TYPEWRITTEN DIRECTORIES. PROVIDE COPPER CONDUCTORS, BUSSING FOR ALL CURRENT CARRYING MATERIALS.

B. PANELS SHALL BE RATED FOR USE AS SERVICE ENTRANCE WHERE REQUIRED.

C. FULLY RATED PANELBOARDS AND ELECTRICAL DISTRIBUTION GEAR, SELECTIVELY COORDINATED PER NEC (UON).

D. APPROVED MANUFACTURERS: SQUARE D, GE, CUTLER HAMMER, SIEMENS.

16480 SAFETY SWITCHES AND MOTOR CONTROLS

A. MOTOR STARTERS SHALL BE ACROSS-THE-LINE MAGNETIC TYPE SIZED FOR MOTOR HORSEPOWER. OVERLOADS SHALL BE PROVIDED IN EACH PHASE. HAND-OFF-AUTO SELECTOR SWITCHES, RUN PILOT LIGHTS AND AUXILIARY CONTACTS SHALL BE INCLUDED. CONTROL SHALL BE 120V VIA SELF CONTAINED TRANSFORMER.

1. MOTORS 1/3 HP AND SMALLER: 120V OR 208V SINGLE PHASE.

2. MOTORS 1/2 HP AND LARGER: 208V OR 480V THREE PHASE.

3. ALL SINGLE SPEED STARTERS, MOTORS SMALLER THAN 1/2 HP – MANUAL STARTER WITH OVERLOAD, PILOT LIGHT.

4. ALL STARTERS AND FUSIBLE COMBINATION STARTERS, MOTORS 1/2 HP AND LARGER – SHALL BE MAGNETIC FVNR, UNLESS OTHERWISE NOTED.

5. MINIMUM SIZE COMBINATION STARTER SHALL BE NEMA SIZE 1.

B. ALL CONTROL, ALARM AND INTERLOCK WIRING SHALL BE IN CONDUIT AND SHALL BE COLOR CODED.

C. DISCONNECT SWITCHES SHALL BE HEAVY DUTY AND SHALL USE A QUICK-MAKE, QUICK-BREAK MECHANISM WITH AN ENCLOSURE OF A NEMA TYPE CONFORMING TO AREA IN WHICH IT IS INSTALLED. DISCONNECTS FOR MOTORS SHALL BE HORSEPOWER RATED.

D. APPROVED MANUFACTURERS: SQUARE D, GE, CUTLER HAMMER, SIEMENS.

16490 FUSES

A. ALL FUSES SHALL BE CURRENT LIMITING TYPE –

1. THRU 90 AMPS – DUAL ELEMENT, TIME DELAY, CLASS RK-5

2. 100 TO 600 AMPS – DUAL ELEMENT, TIME DELAY, CLASS RK-1

3. ABOVE 600 AMPS – TIME DELAY, CLASS L

ALL MOTORS TO BE PROTECTED BY DUAL ELEMENT, TIME DELAY FUSES.

16500 LIGHTING

A. LIGHTING SHALL BE DESIGNED FOR TYPE OF TASK INVOLVED AND IN GENERAL SHALL UTILIZE LED 4000 K UON.

B. IN GENERAL, FIXTURE TYPES SHALL BE:

1. REFER TO LIGHTING FIXTURE SCHEDULE.

C. EXIT LIGHTS AND EMERGENCY EGRESS LIGHTING SHALL HAVE INTEGRAL EMERGENCY BATTERIES OR INVERTER.

16550 LIGHTING CONTROLS

A. PROVIDE CONTROL SYSTEM FOR CONTROL OF INTERIOR AND EXTERIOR LIGHTING SYSTEMS. SYSTEM SHALL INCLUDE RELAY, CONTACTOR CONTROL PANEL, PHOTOCELLS AND ALL ASSOCIATED WIRING.

B. PROVIDE PHOTOCELLS, TIMECLOCKS, CONTACTORS, SENSORS, DIMMERS AND RELAYS TO CONTROL ALL LIGHTING SYSTEMS.

C. APPROVED MANUFACTUERERS

1. HUBBELL OR APPROVED EQUAL.

16709 SURGE SUPPRESSION, BONDING AND GROUNDING

A. SURGE SUPPRESSION EQUIPMENT SHALL BE PROVIDED FOR ALL DISTRIBUTION EQUIPMENT. IT SHALL BE INSTALLED ON THE MAIN ELECTRIC SERVICE, ALL DISTRIBUTION PANELS AND SELECTED SUB-PANELS, POWER SUPPLIES OF SPECIAL SYSTEMS, AND ON CIRCUITS FEEDING SELECTED MAJOR ITEMS THAT HAVE A SENSITIVE ELECTRICAL NATURE. A BONDING AND SINGLE POINT GROUNDING SYSTEM SHALL BE PROVIDED TO INTERCONNECT THE MAIN ELECTRIC SERVICE GROUND, LIGHTNING PROTECTION SYSTEM GROUNDS AND ALL SPECIAL ELECTRONIC SYSTEM ISOLATED GROUNDS.

B. COMPLY WITH UL 1449.

C. MAINS – 200kA, DISTR – 100kA, BRANCH – 50kA

D. APPROVED MANUFACTURERS: JOSLYN, PSI, CURRENT TECHNOLOGY, SQ-D, AND ACT COMMUNICATIONS

16720 FIRE ALARM SYSTEM

A. FIRE ALARM AND DETECTION: AN ELECTRICALLY SUPERVISED, FULLY ADDRESSABLE, 24V D.C. FIRE ALARM SYSTEM SHALL BE PROVIDED AND SHALL INCLUDE, BUT NOT LIMITED TO, THE FOLLOWING:

1. DETECTION GENERALLY FROM DUCT LOCATED PHOTOELECTRIC TYPE DETECTORS AND AREA CEILING PHOTOELCTRIC DETECTORS.

2. IONIZATION DETECTORS IN TRASH CHUTES.

3. FIRE ALARM, DOUBLE ACTION MANUAL PULL STATIONS.

4. SPRINKLER SYSTEM WATER FLOW SWITCH AND VALVE ALARM.

5. ALARM SIGNALS FROM WITH FLASHING LIGHTS (ADA COMPLIANT).

6. FAN SHUT DOWN, SMOKE DOOR CLOSURE, AND SMOKE DAMPER CONTROL, WHERE REQUIRED.

7. CONNECTION TO LIFE SAFETY BRANCH OF THE ESSENTIAL DISTRIBUTION SYSTEM.

8. SEE FIRE ALARM DRAWINGS FOR ADDITIONAL INFORMATION.

B. APPROVED MANUFACTURERS: NOTIFIER, EDWARDS, JOHNSON CONTROLS, SIMPLEX.

16740 TELEPHONE/DATA RACEWAY SYSTEM

A. TELEPHONE SYSTEM: CONDUIT, OUTLET BOXES AND TERMINAL BOARDS LOCATED IN TELEPHONE EQUIPMENT CLOSETS SHALL BE PROVIDED. COMPUTER TERMINAL LINE, LOCATIONS SHALL BE REVIEWED AND PROVISIONS MADE FOR DATA LINES AND TERMINATIONS.

B. SEE RISERS FOR ADDITIONAL INFORMATION.

WILLIAM P. HORN
ARCHITECT , P.A.

915 EATON ST.
KEY WEST,
FLORIDA
33040

TEL. (305) 296-8302
FAX (305) 296-1033

LICENSE NO.
AA 0003040

OLD GYMNASIUM
BUILDING
1300 White Street Rear
KEY WEST, FLORIDA.

SEAL
Donald H. Austin, Jr. PE
FL PE No. 60651

DATE
05-15-17 HARC
01-23-18 REV
05-09-18 BID
06-08-18 BLDG. DEPT.

REVISIONS
1 07/06/18 BID RFI

DRAWN BY
DA

PROJECT NUMBER
1702

E-6

1 NEW SHEET ISSUED