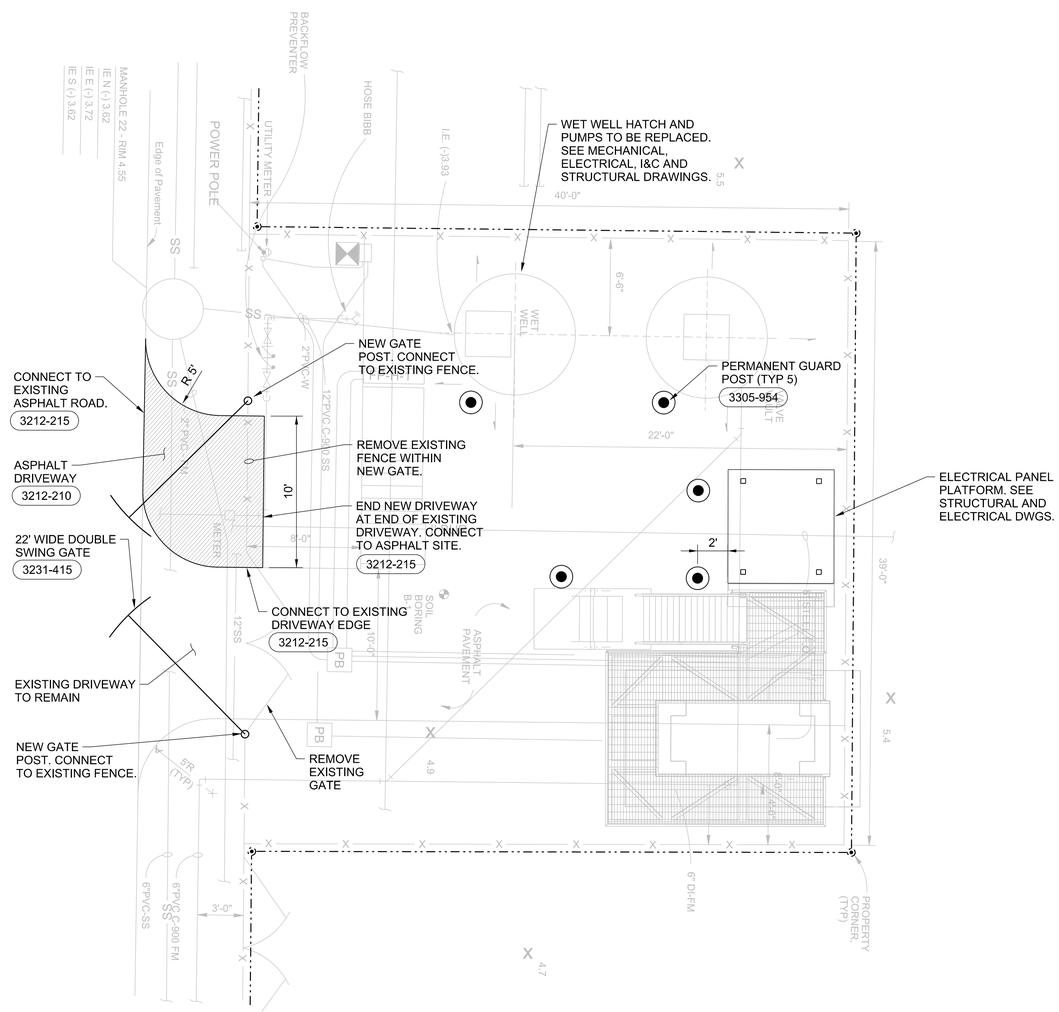

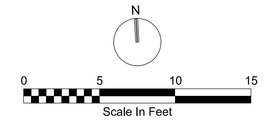

NOTE:

1. CONTRACTOR TO FIELD LOCATE PERMANENT GUARD POSTS WITH OWNER.

NO.	DATE	DR	REVISION	CHK	APVD	BY	APVD
DSGN	R MORRISON	R MORRISON		T MALONE		R MORRISON	

©CH2M HILL 2018. ALL RIGHTS RESERVED.

3011 S.W. WILLISTON ROAD
GAINESVILLE, FLORIDA 32608
EB0000072 AAC001992
RICHARD THOMAS MORRISON PE 67713

PUMP STATIONS H & B REHABILITATION
AND PUPM STATION GENERATOR REPLACEMENT
CITY OF KEY WEST
KEY WEST, FLORIDA

CIVIL
PUMP STATION H SITE PLAN

REUSE OF DOCUMENTS: THIS DOCUMENT, AND THE IDEAS AND DESIGNS INCORPORATED HEREIN, AS AN INSTRUMENT OF PROFESSIONAL SERVICE, IS THE PROPERTY OF CH2M HILL AND IS NOT TO BE USED, IN WHOLE OR IN PART, FOR ANY OTHER PROJECT WITHOUT THE WRITTEN AUTHORIZATION OF CH2M HILL.

VERIFY SCALE
BAR IS ONE INCH ON ORIGINAL DRAWING.
0 1"

DATE	MAY 2018
PROJ	683450
DWG	020-C-201
SHEET	12 of 30

BID DOCUMENTS

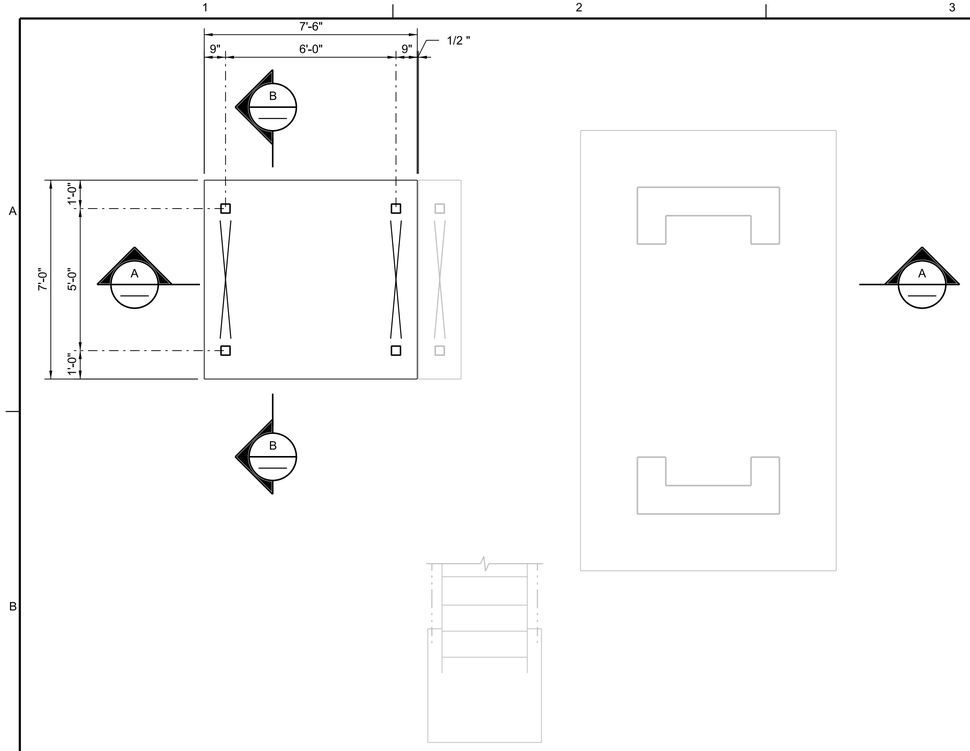

FOUNDATION PLAN
3/8"=1'-0"

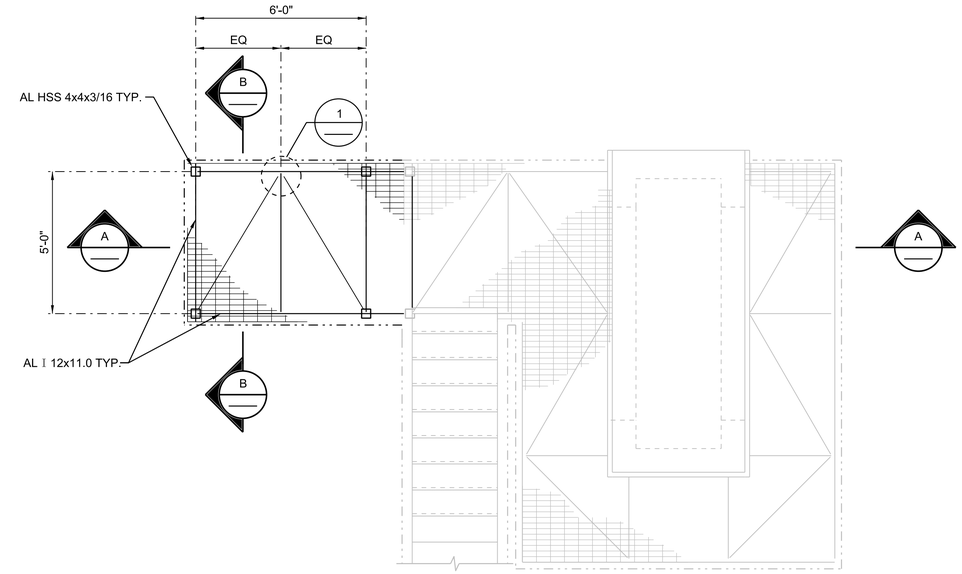

TOP PLAN
3/8"=1'-0"

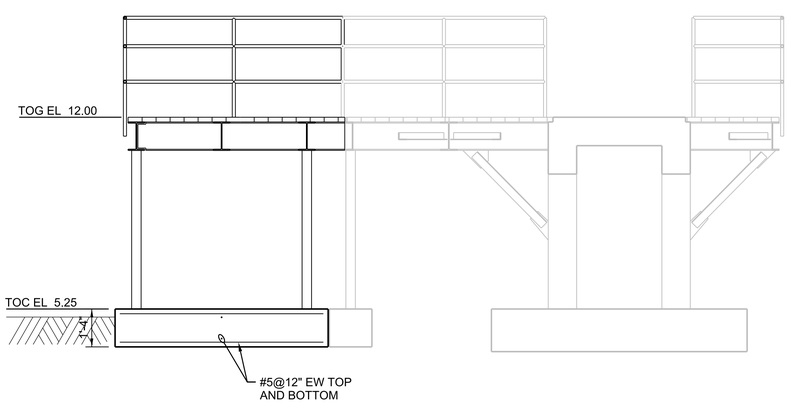

A SECTION
3/8"=1'-0"

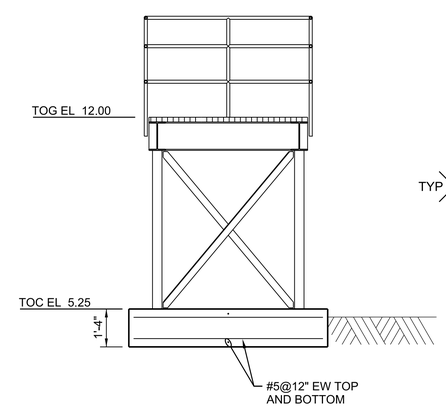

B SECTION
3/8"=1'-0"

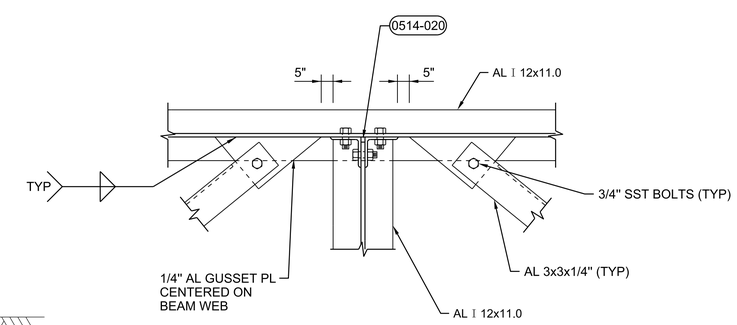

1 DETAIL
NTS

NO.	DATE	REVISION	BY	APVD

DSGN R KOEKEMOER | DR P RAYMONT | CHK D EVERSON | APVD R KOEKEMOER

3011 S.W. WILLISTON ROAD
GAINESVILLE, FLORIDA 32608
EB0000072 · AAC001992
ROCCO DEVILLIERS KOEKEMOER PE 76468

PUMP STATIONS H & B REHABILITATION
AND PUPM STATION GENERATOR REPLACEMENT
CITY OF KEY WEST
KEY WEST, FLORIDA

STRUCTURAL
PUMP STATION H
PLATFORM H
PLANS AND SETIONS

REUSE OF DOCUMENTS: THIS DOCUMENT, AND THE IDEAS AND DESIGNS INCORPORATED HEREIN, AS AN INSTRUMENT OF PROFESSIONAL SERVICE, IS THE PROPERTY OF CH2M HILL AND IS NOT TO BE USED, IN WHOLE OR IN PART, FOR ANY OTHER PROJECT WITHOUT THE WRITTEN AUTHORIZATION OF CH2M HILL.
©CH2M HILL 2018. ALL RIGHTS RESERVED.

AS NOTED
VERIFY SCALE
BAR IS ONE INCH ON ORIGINAL DRAWING.
0 1"

DATE	MAY 2018
PROJ	683450
DWG	020-S-202
SHEET	13 of 30

BID DOCUMENTS

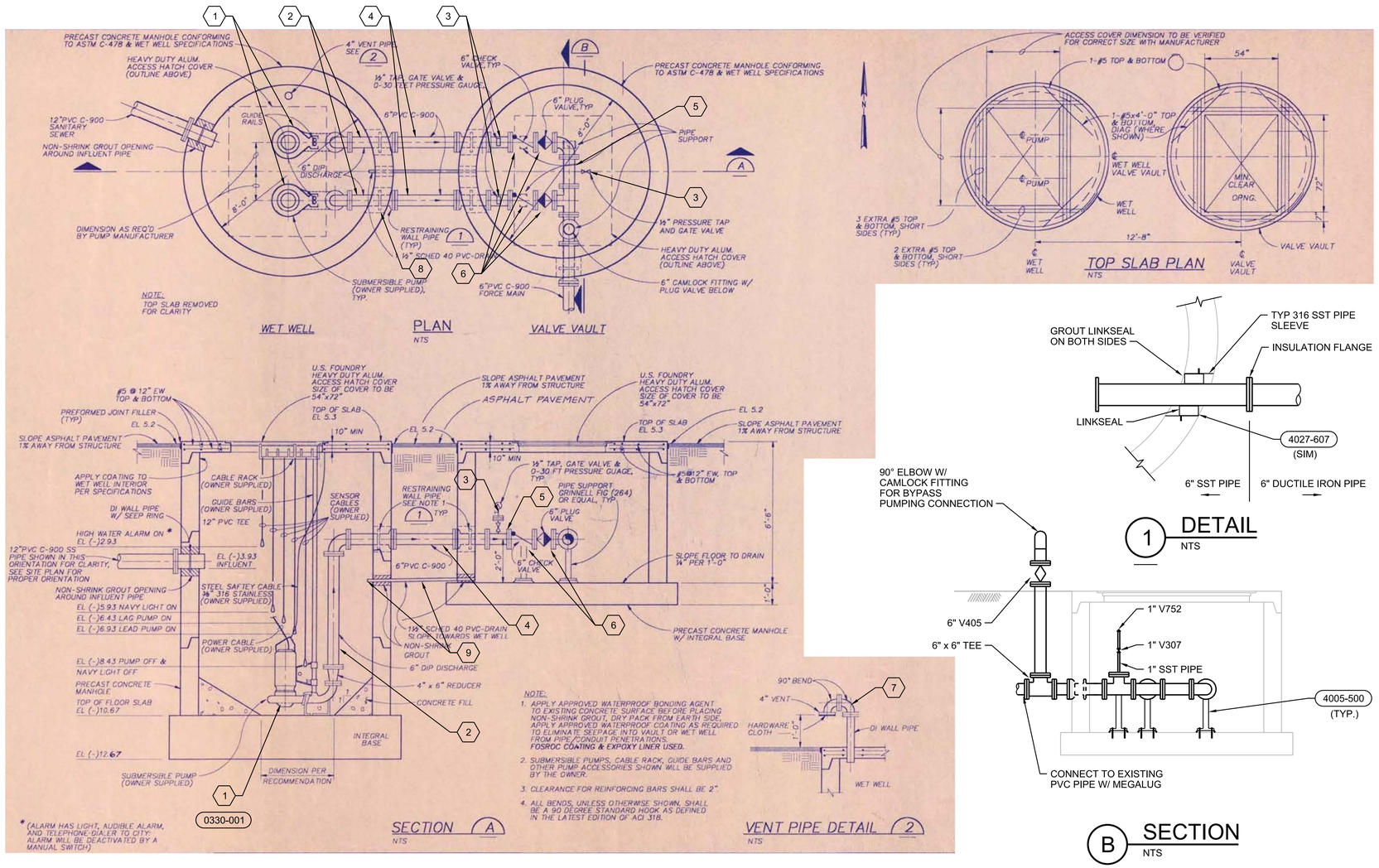

1 DETAIL
NTS

B SECTION
NTS

PUMP STATION H - PLAN
NTS

SHEET KEYNOTES

1. REPLACE TWO PUMPS W/ NEW TWO PUMPS WITH NEW 316 SST ELBOWS AND 316 SST GUIDE RAILS.
2. REPLACE ALL PIPES IN WET WELL W/ TYPE 316 SST PIPES.
3. PROVIDE 1/2" TAP AND 1/2" V307. DO NOT PROVIDE PRESSURE GAUGE.
4. REPLACE ALL PIPES BETWEEN WET WELL AND VALVE VAULT W/ NEW DUCTILE IRON PIPES.
5. REPLACE ALL PIPES & FITTINGS IN VALVE VAULT W/ NEW DUCTILE IRON PIPES & FITTINGS. REPLACE ALL PIPE SUPPORTS W/ NEW ONES.
6. REPLACE 2 CHECK VALVES AND 2 PLUG VALVES W/ NEW 6" V608 AND NEW 6" V405.
7. CLEAN AND PAINT VENT W/ PAINT SYSTEM N0-4.
8. DEMOLISH ALL PIPE PENETRATIONS. INSTALL TYP 316 SST WALL PIPES AND USE LINKSEAL FOR ALL PENETARTIONS. (TYP 7) SEE DETAIL 1.
9. INSTALL P-TRAP ON DRAIN PIPE. REPLACE 1 1/2" PVC DRAIN BETWEEN WET WELL & VALVE VAULT.

NO.	DATE	REVISION	BY	APVD

DSGN T FU | DR Z BRYAN | CHK T PTAK | APVD T FU

3011 S.W. WILLISTON ROAD
GAINESVILLE, FLORIDA 32608
EB0000072 · AAC001992
TAO FU PE 63138

PUMP STATIONS H & B REHABILITATION AND PUPM STATION GENERATOR REPLACEMENT
CITY OF KEY WEST
KEY WEST, FLORIDA

PROCESS MECHANICAL
PUMP STATION H PLAN & SECTION

1" = X'
VERIFY SCALE
BAR IS ONE INCH ON ORIGINAL DRAWING.
0 1"

DATE	MAY 2018
PROJ	683450
DWG	020-D-201
SHEET	14 of 30

BID DOCUMENTS

REUSE OF DOCUMENTS: THIS DOCUMENT, AND THE IDEAS AND DESIGNS INCORPORATED HEREIN, AS AN INSTRUMENT OF PROFESSIONAL SERVICE, IS THE PROPERTY OF CH2M HILL AND IS NOT TO BE USED, IN WHOLE OR IN PART, FOR ANY OTHER PROJECT WITHOUT THE WRITTEN AUTHORIZATION OF CH2M HILL.
©CH2M HILL 2018. ALL RIGHTS RESERVED.

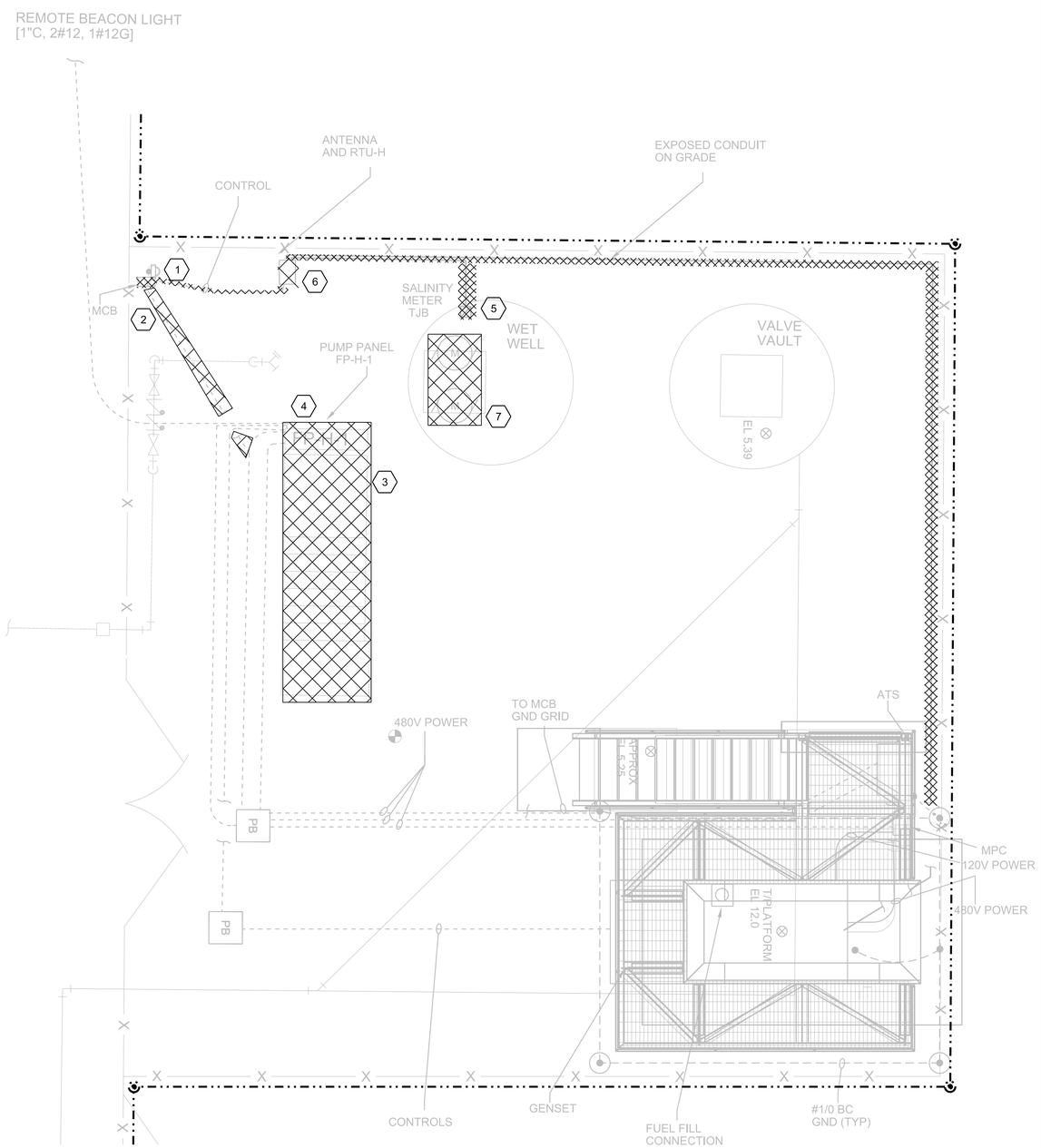

PUMP STATION H DEMO SITE PLAN

NTS

1 PHOTO DETAIL

NTS

2 PHOTO DETAIL

NTS

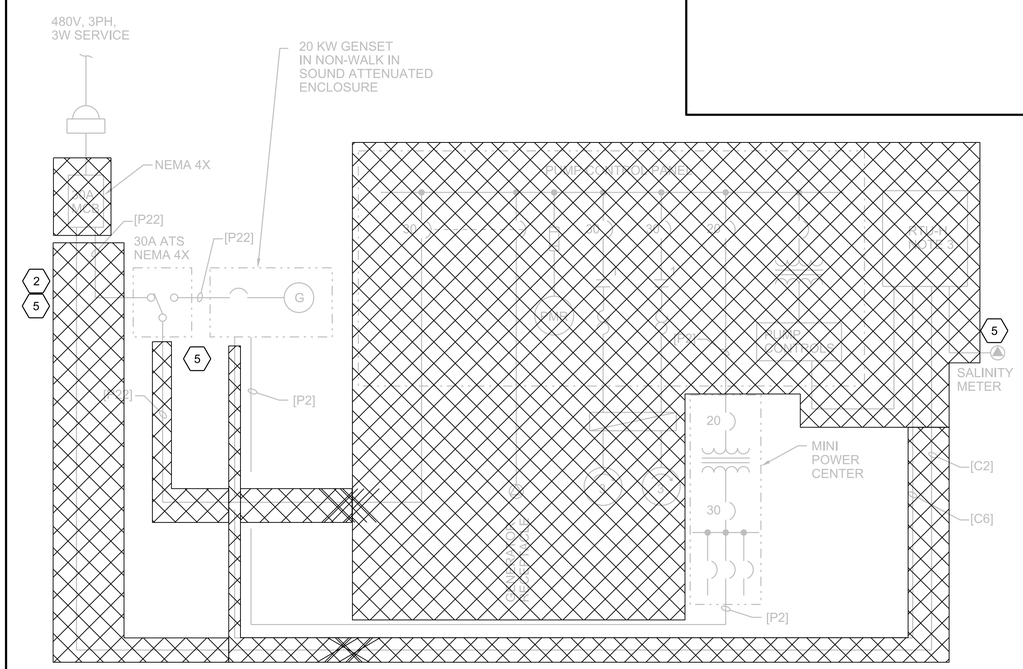

PUMP STATION H SINGLE LINE

NTS

GENERAL NOTES

1. WIRING DEMOLITION: REMOVE ENTIRE LENGTH OF CONDUCTORS THAT REQUIRE DEMOLITION. EXISTING UNDERGROUND CONDUIT MARKED FOR DEMO MAY BE ABONDONED IN PLACE

LEGEND:
TO BE REMOVED

SHEET KEYNOTES

1. EXISTING SERVICE DISCONNECT INCLUDING CONDUCTORS FROM THE UTILITY METER TO THE DISCONNECT SWITCH AND FROM THE DISCONNECT SWITCH TO THE PUMP CONTROL PANEL TO BE REMOVED.
2. DISCONNECT AND DISCARD ALL CONDUCTORS FROM THE UTILITY METER TO THE DISCONNECT SWITCH FROM THE DISCONNECT SWITCH TO THE PUMP CONTROL PANEL FP-H-1, AND FROM THE DISCONNECT SWITCH TO EXISTING ATS
3. DEMO EXISTNG PLATFORM AND STAIRS WHERE FP-H-1 IS LOCATED
4. REMOVE EXISISTING PUMP CONTROL PANEL FP-H-1 AND TJBs LOCATED UNDER PUMP CONTROL PANEL.
5. REMOVE EXISTING RTU ASSOCIATED CONDUCTORS AND EXPOSED CONDUITS TERMINATING AT THE SALINITY METER, GENERATOR, DISCONNECT SWITCH, AND GENERATOR.
6. REMOVE SALINITY METER TJB WITHOUT DAMAGING CONDUCTORS AND SALINITY METER. SALINITY METER WILL BE RELOCATED. SEE DRAWINGS 20-E-102
7. REMOVE EXISTING SUBMERSIBLE PUMPS.

NO.	DATE	REVISION	BY	APVD

DSGN	DR	CHK	APVD
N ADAMS	A PASTRANA	D NICHOLSON	D NICHOLSON

©CH2M HILL 2018. ALL RIGHTS RESERVED.

3011 S.W. WILLISTON ROAD
GAINESVILLE, FLORIDA 32608
EB0000072 · AAC001992
DAVID C. NICHOLSON PE 60201

PUMP STATIONS H & B REHABILITATION
AND PUPM STATION GENERATOR REPLACEMENT
CITY OF KEY WEST
KEY WEST, FLORIDA

ELECTRCIAL
PUMP STATION H SITE DEMOLITION PLAN

REUSE OF DOCUMENTS: THIS DOCUMENT, AND THE IDEAS AND DESIGNS INCORPORATED HEREIN, AS AN INSTRUMENT OF PROFESSIONAL SERVICE IS THE PROPERTY OF CH2M HILL AND IS NOT TO BE USED, IN WHOLE OR IN PART, FOR ANY OTHER PROJECT WITHOUT THE WRITTEN AUTHORIZATION OF CH2M HILL.

1" = X'
VERIFY SCALE
BAR IS ONE INCH ON ORIGINAL DRAWING.
0 1"

DATE	MAY 2018
PROJ	683450
DWG	020-E-101
SHEET	15 of 30

BID DOCUMENTS

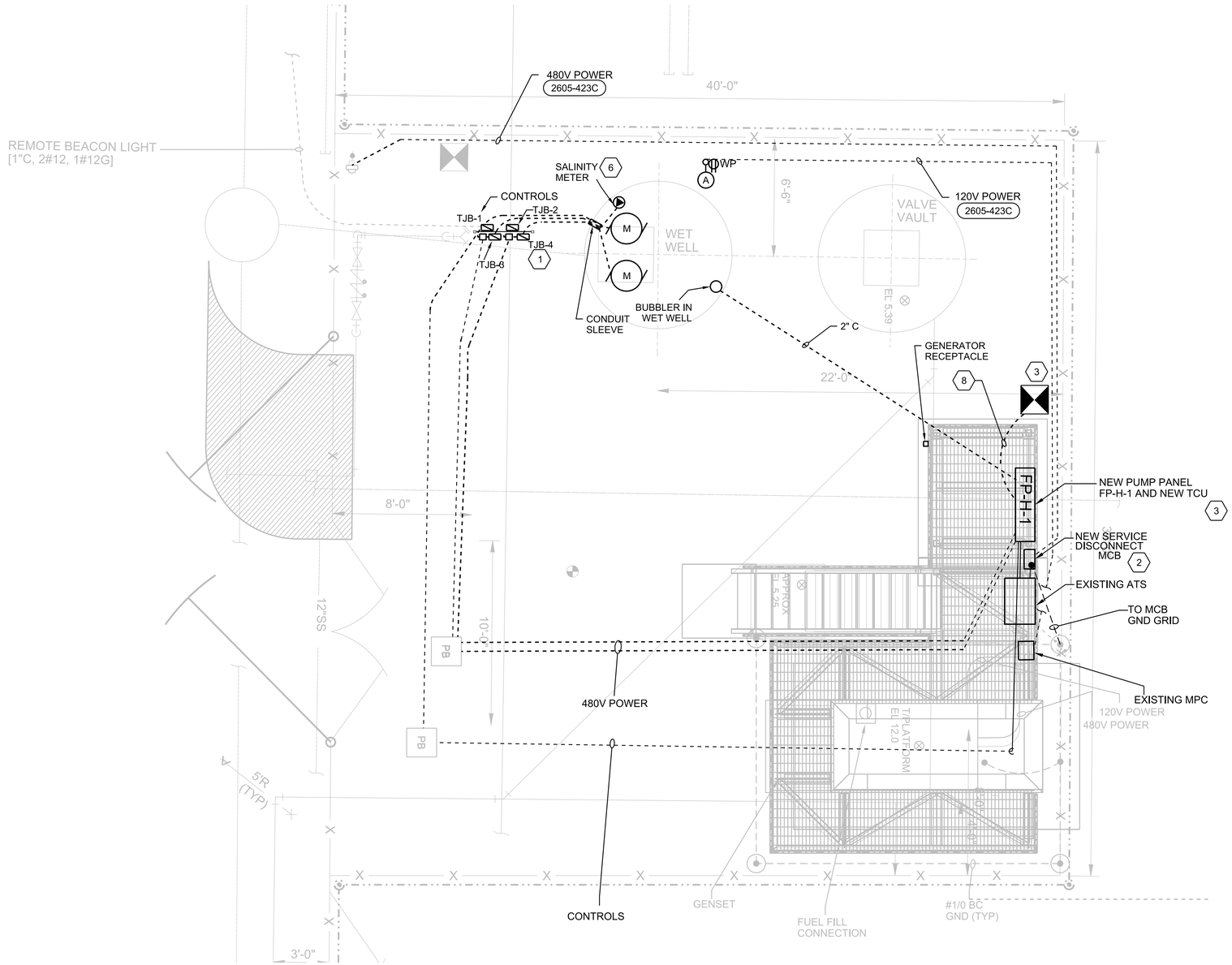

GENERAL SHEET NOTES

A. DO NOT SCALE ELECTRICAL DRAWING. REFER TO THE CIVIL, ARCHITECTURAL/MECHANICAL, STRUCTURAL DRAWINGS AND APPROVED MANUFACTURER'S SHOP DRAWINGS FOR THE EXACTLY LOCATION OF ALL EQUIPMENT.

B. ALL WORK SHALL COMPLY WITH THE NEC AND LOCAL CODES.

C. CONTRACTOR SHALL FIELD VERIFY EXISTING UNDERGROUND UTILITIES, PIPING, CONDUITS, ETC. AND REROUTE NEW ELECTRICAL CONDUITS AS REQUIRED.

D. CONDUCTORS SHALL NOT BE SPLICED EXCEPT AS NOTED IN THE SPECIFICATIONS AND SHOWN ON THE DRAWINGS.

HAZARDOUS LOCATION NOTES:

1. PER NFPA 820, TABLE A.4.2, ROW 16, LINE a, THE WET WELL IS CLASSIFIED AS A HAZARDOUS LOCATION AS FOLLOWS:

a. THE AREA INSIDE THE WETWELL AND WITHIN A 3'-0" RADIUS AROUND VENT OPENING AS CONSIDERED CLASS I, DIV 1, GROUP C AND D LOCATIONS.

b. THE AREA WITHIN A 5'-0" RADIUS AROUND VENT OPENING AND AN ENVELOPE 18" ABOVE HATCHES AND EXTENDING 3'-0" FROM THE EDGE OF THE HATCHES ARE CONSIDERED CLASS I, DIV 2, GROUP C AND D LOCATIONS.

2. PER NFPA 820, TABLE 4.2, ROW 31, LINE a AND ROW 36, LINE a, THE VALVE AND METER VAULTS ARE CLASSIFIED AS HAZARDOUS LOCATIONS AS FOLLOWS:

a. THE AREA INSIDE THE VAULT IS CONSIDERED CLASS I, DIV 2, GROUP C AND D LOCATIONS.

3. PROVIDE SUITABLE WIRING METHODS AND MATERIALS FOR THE HAZARDOUS LOCATIONS PER NFPA 70 (NEC).

SHEET KEYNOTES

1. FURNISH AND INSTALL NEW NEMA 4X TERMINAL JUNCTION BOXES TO INTERCEPT EXISTING CONDUITS FROM WET WETWELL. LOCATE OUTSIDE OF HAZARDOUS AREA. (2605-101)
2. RELOCATED NEW MCB, LOCATE ON NEW RAISED PLATFORM. PROVIDE NEW WIRING FROM EXISTING SERVICE POLE UTILITY METER TO MCB-B. SEE DETAIL (2605-440)
3. CONNECT NEW ENCLOSURES, GROUND BUSES AND EXISTING ANTENNA TO EXISTING GROUNDING ELECTRODE SYSTEM WITH A TIN-PLATED COPPER CONDUCTOR 2/0 AWG MINIMUN
5. CONNECT NAVY REMOTE BECON LIGHT TO PANEL FPH-1 THROUGH TJB-3
6. LOCATE SALINITY METER OUTSIDE THE HAZARDOUS AREA
7. GENERATOR RECEPTACLE MOUNT AT 7'-0" AFG USING DETAIL (2605-008B)
8. USE LONG BENDING RADII ELBOW TO FEED COAX CABLE FROM ANTENNA TO PANEL FP-H-1

NO.	DATE	REVISION	BY	APVD

DSGN N ADAMS | DR A PASTRANA | CHK D NICHOLSON | APVD D NICHOLSON | BY D NICHOLSON

©CH2M HILL 2018. ALL RIGHTS RESERVED.

3011 S.W. WILLISTON ROAD
GAINESVILLE, FLORIDA 32608
EB0000072 · AAC001992
DAVID C. NICHOLSON PE 60201

PUMP STATIONS H & B REHABILITATION
AND PUPM STATION GENERATOR REPLACEMENT
CITY OF KEY WEST
KEY WEST, FLORIDA

ELECTRICAL
PUMP STATION H
NEW SITE
PLAN

REUSE OF DOCUMENTS: THIS DOCUMENT, AND THE IDEAS AND DESIGNS INCORPORATED HEREIN, AS AN INSTRUMENT OF PROFESSIONAL SERVICE IS THE PROPERTY OF CH2M HILL AND IS NOT TO BE USED, IN WHOLE OR IN PART, FOR ANY OTHER PROJECT WITHOUT THE WRITTEN AUTHORIZATION OF CH2M HILL.

1" = X'
VERIFY SCALE
BAR IS ONE INCH ON ORIGINAL DRAWING.
0 1"

DATE	MAY 2018
PROJ	683450
DWG	020-E-2001
SHEET	16 of 30

BID DOCUMENTS

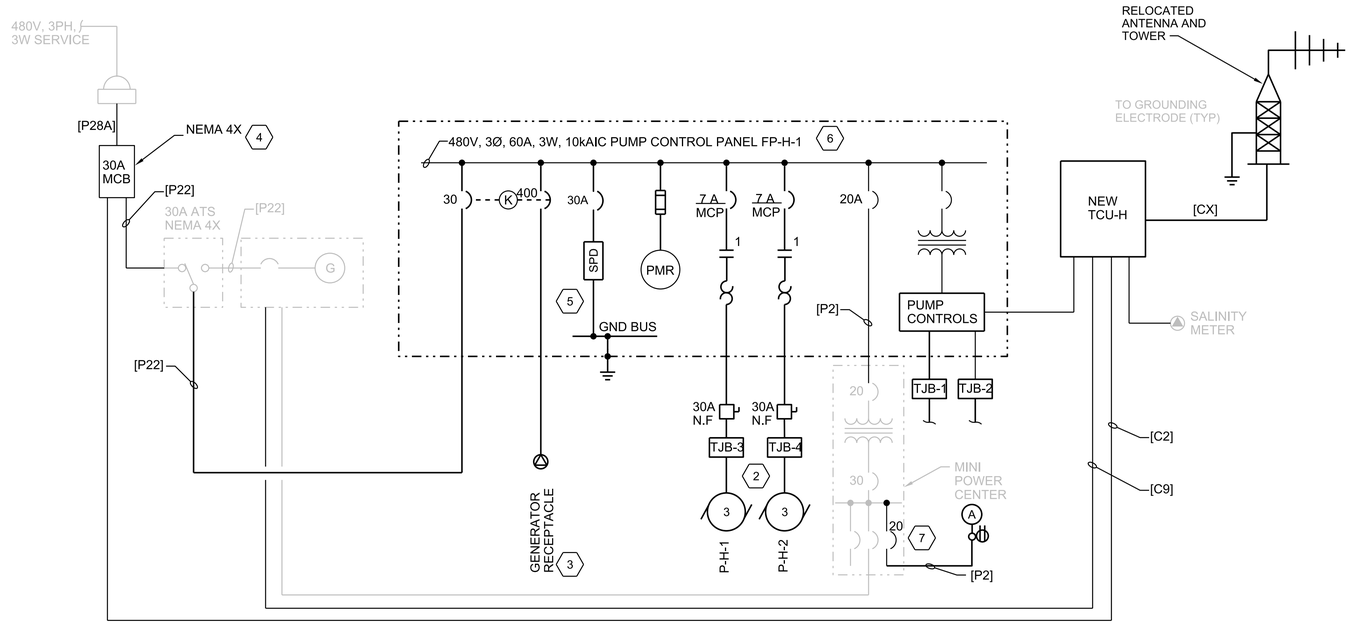

LOAD SUMMARY	
DESCRIPTION	AMPERAGE
PUMP 1	4.84
PUMP 2	4.84
MISCELLANEOUS LOADS	8.9
CONNECTED LOAD	18.58
DESIGN LOAD ∗	19.79

∗ DESIGN LOAD = CONNECTED LOAD PLUS 25% OF LARGEST MOTOR

SHEET KEYNOTES

1. ALL RACEWAYS TO BE PVC-COATED RGS. REFER TO SPECIFICATION SECTION 26 05 01
2. PROVIDE NEMA 4X 316 SST TERMINAL JUNCTION BOXES SIZE PER NEC REQUIREMENTS WITH NSI POLARIS BLUE SERIES SUBMERSIBLE POWER DISTRIBUTION BLOCKS.
3. FURNISH AND INSTALL 400A, 600V GENERATOR RECEPTACLE WITH JUNCTION BOX AND ANGLED ADAPTER TO BE REMOTELY LOCATED. RUSSELL STOLL: DS 4404MRA00, NO SUBSTITUTIONS.
4. NEW MAIN CIRCUIT BREAKER DISCONNECT WITH SHUNT TRIP OPTION. BREAKER SHALL OPEN UPON RECEIPT OF SHUNT TRIP COMMAND FROM TCU.
5. PROVIDE CATEGORY C, 6-MODE, 20kA NOMINAL DISCHARGE CURENT, SPD WITH SINE WAVE TRACKING. INSTALL IN POWER PANEL AS SHOWN AND ON THE NORMAL / UTILITY SIDE OF THE AUTOMATIC TRANSFER SWITCH.
6. PUMP CONTROL PANEL SHALL BEAR A FROM A NATIONAL RECOGNIZED TESTING LABORATORY INDICATING ITS LISTING / LABELING IN ACCORDANCE WITH UL-698A, INDUSTRIAL CONTROL PANELS.
7. FURNISH AND INSTALL NEW 20A BREAKER IN THE EXISTING MINI POWER CENTER TO POWER A NEW POLE MOUNTED LIGHT FIXTURE AND A WEATHER PROOF RECEPTACLE.
8. THE GENERATOR CIRCUIT BREAKER TO BE INTERLOCKED WITH MAIN CIRCUIT BREAKER TO PREVENT BOTH CIRCUIT BREAKERS FROM BEING CLOSED AT THE SAME TIME. PROVIDE A 3" CONDUIT WITH A 4#350KCM AND 1#4 GROUND FROM THE GENERATOR CIRCUIT BREAKER TO THE NEW 400 A GENERATOR RECEPTACLE
9. BRAIDED STAINLESS STEEL CABLE SLEEVES TO PROTECT CABLES AND CONDUCTORS

REVISED ONE LINE DIAGRAM
NTS

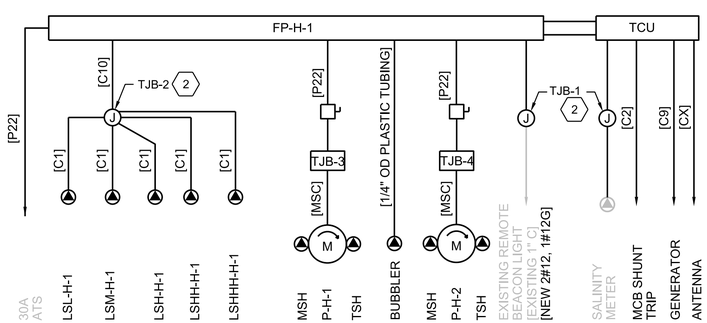

RISER DIAGRAM
NTS

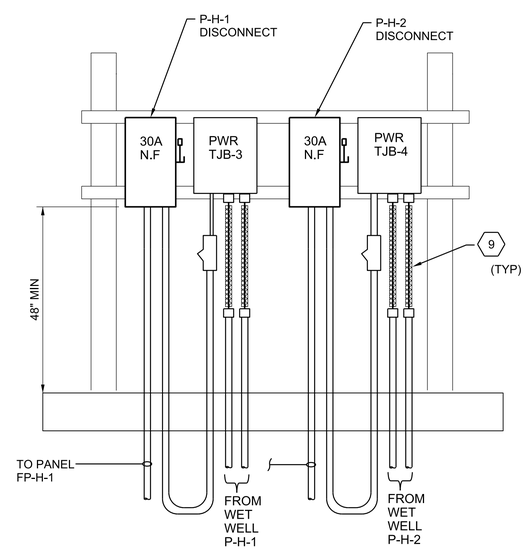

A MOUNTING RACK FRONT LAYOUT
NTS

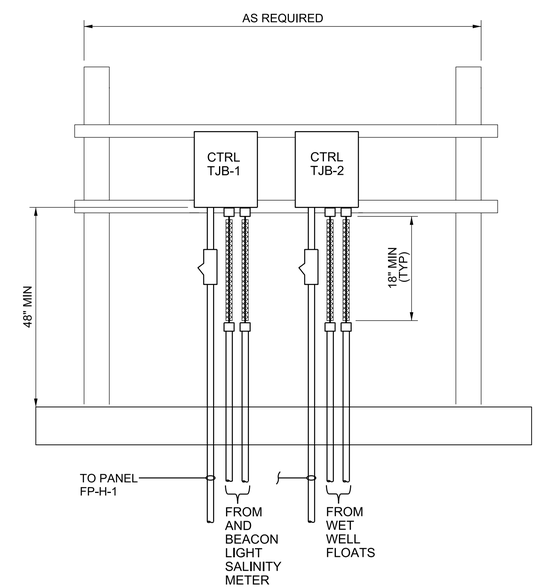

B MOUNTING RACK BACK LAYOUT
NTS

NO.	DATE	REVISION	BY	APVD

DSGN N ADAMS | DR A PASTRANA | CHK D NICHOLSON | APVD D NICHOLSON | BY D NICHOLSON

3011 S.W. WILLISTON ROAD
GAINESVILLE, FLORIDA 32608
EB0000072 · AAC001992
DAVID C. NICHOLSON PE 60201

PUMP STATIONS H & B REHABILITATION
AND PUPM STATION GENERATOR REPLACEMENT
CITY OF KEY WEST
KEY WEST, FLORIDA

ELECTRICAL
PUMP STATION H ONE-LINE DIAGRAM

1" = X'
VERIFY SCALE
BAR IS ONE INCH ON ORIGINAL DRAWING.
0 1"

DATE	MAY 2018
PROJ	683450
DWG	020-E-601
SHEET	17 of 30

BID DOCUMENTS

REUSE OF DOCUMENTS: THIS DOCUMENT, AND THE IDEAS AND DESIGNS INCORPORATED HEREIN, AS AN INSTRUMENT OF PROFESSIONAL SERVICE IS THE PROPERTY OF CH2M HILL AND IS NOT TO BE USED, IN WHOLE OR IN PART, FOR ANY OTHER PROJECT WITHOUT THE WRITTEN AUTHORIZATION OF CH2M HILL.
©CH2M HILL 2018. ALL RIGHTS RESERVED.